OMRON

Vision Sensor

FHV Series

Smart Camera

Setup Manual

FHV7□-□□□□□-□□□-□□

SYSMAC
always in control

Z408-E1-12

NOTE

- All rights reserved.
- No part of this publication may be reproduced, stored in a retrieval system, or transmitted, in any form, or by any means, mechanical, electronic, photocopying, recording, or otherwise, without the prior written permission of OMRON.
- No patent liability is assumed with respect to the use of the information contained herein. Moreover, because OMRON is constantly striving to improve its high-quality products, the information contained in this manual is subject to change without notice. Every precaution has been taken in the preparation of this manual. Nevertheless, OMRON assumes no responsibility for errors or omissions.
  Neither is any liability assumed for damages resulting from the use of the information contained in this publication.

Trademarks

- Sysmac and SYSMAC are trademarks or registered trademarks of OMRON Corporation in Japan and other countries for OMRON factory automation products.
- This software is based in part on the work of the Independent JPEG Group.
- This software includes 7-Zip.
  7-Zip is licensed under the terms of the GNU Lesser General Public License. 7-Zip is a trademark of Igor Pavlov. For the GNU Lesser General Public License, see the following website: (www.gnu.org)
- Microsoft, Windows, Windows Vista, Excel, and Visual Basic are either registered trademarks or trademarks of Microsoft Corporation in the United States and other countries.
- Intel, Core and Pentium are trademarks of Intel Corporation in the U.S. and/or other countries.
- EtherCAT® is trademarks or registered trademarks, licensed by Beckhoff Automation GmbH, Germany.
- ODVA, CIP, CompoNet, DeviceNet, and EtherNet/IP are trademarks of ODVA.
- The SD, SDHC, microSD, and microSDHC logos are trademarks of SD-3C, LLC.
- QR Code is a registered trademark of DENSO WAVE INCORPORATED.
- MELSEC is a registered trademarks of Mitsubishi Electric Corporation.

Other company names and product names in this document are the trademarks or registered trademarks of their respective companies.

Copyrights

Microsoft product screen shots reprinted with permission from Microsoft Corporation.

Introduction

Thank you for purchasing the FHV Series Smart Camera.
This manual contains information that is necessary to use the FHV Series Smart Camera.
Please read this manual and make sure you understand the functionality and performance of the FHV Series Smart Camera before you attempt to use it in a control system.
Keep this manual in a safe place where it will be available for reference during operation.

Intended Audience

This manual is intended for the following personnel, who must also have knowledge of electrical systems (an electrical engineer or the equivalent).

- Personnel in charge of introducing FA systems.
- Personnel in charge of designing FA systems.
- Personnel in charge of installing and maintaining FA systems.
- Personnel in charge of managing FA systems and facilities.

Applicable Products

This manual covers the following products.

- FHV7□-□□□□□-□□□-□□

Part of the specifications and restrictions are given in other manuals. Refer to Relevant Manuals on *Relevant Manuals* on page 2 and *Related Manuals* on page 26.

Relevant Manuals

The following table provides the relevant manuals for this product. Read all of the manuals that are relevant to your system configuration and application before you use this product.

Information Reference Matrix	Manual				
	Basic information				
	Vision System FH/FHV Series User's Manual	Vision System FHV Series Smart Camera Setup Manual	Vision System FH/FHV Series Processing Item Function Reference Manual	Vision System FH/FHV Series User's Manual for Communications Settings	Vision System FH/FHV Series Operation Manual for Sysmac Studio
Overview of FHV7 series	●	●			
Setup and Wiring					
EtherCAT					
EtherNet/IP					
PROFINET		●			
Ethernet					
RS-232C					
Parallel interface					
Setup the communication setting of Smart Camera					
EtherCAT					●
EtherNet/IP					
PROFINET	●	●		●	
Ethernet					
RS-232C					
Parallel interface					
Setup the Smart Camera					
EtherCAT					●
EtherNet/IP					
PROFINET	●			●	
Ethernet					
RS-232C					
Parallel interface					

Information Reference Matrix	Manual				
	Basic information				
	Vision System FH/FHV Series User's Manual	Vision System FHV Series Smart Camera Setup Manual	Vision System FH/FHV Series Processing Item Function Reference Manual	Vision System FH/FHV Series User's Manual for Communications Settings	Vision System FH/FHV Series Operation Manual for Sysmac Studio
Create and Set the Scene					
EtherCAT					●
EtherNet/IP					
PROFINET	●		●		
Ethernet					
RS-232C					
Parallel interface					
Optimizing the Scene Flow					
EtherCAT					
EtherNet/IP					
PROFINET			●		
Ethernet					
RS-232C					
Parallel interface					
Connecting the Controller					
EtherCAT					●
EtherNet/IP					
PROFINET	●	●		●	
Ethernet					
RS-232C					
Parallel interface					
Using Helpful Functions					
EtherCAT					●
EtherNet/IP					
PROFINET	●				
Ethernet					
RS-232C					
Parallel interface					
Troubleshooting and Problem Solving	●				

Manual Structure

Page Structure

The following page structure is used in this manual.

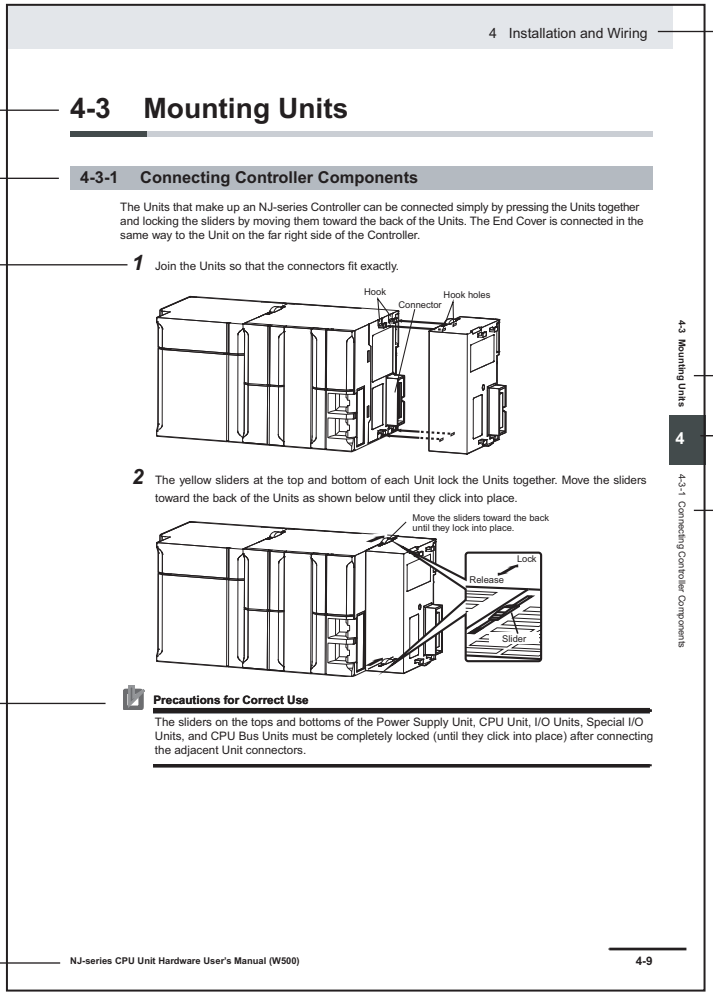

Level 1 heading

Level 2 heading

Level 3 heading

Gives the current headings.

Level 2 heading

Level 3 heading

A step in a procedure

Indicates a procedure.

Page tab

Gives the number of the main section.

Special information

Icons indicate precautions, additional information, or reference information.

Manual name

Note This illustration is provided only as a sample. It may not literally appear in this manual.

Special Information

Special information in this manual is classified as follows:

Precautions for Safe Use

Precautions on what to do and what not to do to ensure safe usage of the product.

Precautions for Correct Use

Precautions on what to do and what not to do to ensure proper operation and performance.

Additional Information

Additional information to read as required.
This information is provided to increase understanding or make operation easier.

Sections in This Manual

1 Confirm the Package

2 Overview of FHV series

3 Configuration

4 Handling and Installation Environment

5 Installation

6 Power Supply and I/O Interface

7 Software Setup

I Index

CONTENTS

Introduction 1
Intended Audience 1
Applicable Products 1

Relevant Manuals 2

Manual Structure 4
Page Structure 4
Special Information 5

Sections in This Manual 7

Terms and Conditions Agreement 12
Warranty, Limitations of Liability 12
Application Considerations 13
Disclaimers 13

Safety Precautions 15
Symbols and the Meanings for Safety Precautions Described in This Manual 15
Meanings of Alert Symbols 15
Warning 16

Precautions for Safe Use 18
Condition of the Fitness of OMRON Products 18
Installation Environment 18
Power Supply and Wiring 18
Mounting 19
Others 20

Precautions for Correct Use 21
Installation Location 21
Power Supply, Connection, and Wiring 21
Maintenance 22
Beam 22
Image Sensor 22
Communications with Upper Equipment 22
Failsafe Measures 23
Warm-up 23
Camera Installation 23
Others 23
Security 24
LED Safety 24

Regulations and Standards 25
Using Product Outside Japan 25
Conformance to KC Standards 25
Conformance to EC/EU Directives and UK Legislations 25
WEEE Directive 25

Related Manuals 26

Terminology 27

Revision History 31

Section 1 Confirm the Package

1-1 Smart Camera 1-2
1-1-1 FHV7□-□□□□□-C Series 1-2
1-1-2 FHV7□-□□□□□-S□□ Series 1-2
1-1-3 FHV7□-□□□□□-H□□ Series 1-3
1-1-4 FHV7□-□□□□□-S□□-□□ Series 1-3
1-1-5 FHV7□-□□□□□-H□□-□□ Series 1-4

1-2 Sold Separately 1-5
1-2-1 Smart Camera Data Unit 1-5
1-2-2 Cables 1-5
1-2-3 Modules 1-9
1-2-4 Accessories 1-10
1-2-5 Lighting and Lighting Controller 1-12
1-2-6 Touch Panel Monitor 1-13
1-2-7 Software 1-14

Section 2 Overview of FHV Series

2-1 Overview of System 2-2
2-1-1 Basic System of Measurement 2-2

2-2 Flow of Use Procedure 2-9

Section 3 Configuration

3-1 Smart Camera 3-3
3-1-1 FHV Series 3-3

3-2 Smart Camera Data Unit 3-13
3-2-1 Specifications 3-13
3-2-2 Component Names and Functions 3-14
3-2-3 Dimensions 3-15

3-3 Cables 3-17
3-3-1 I/O Cables 3-17
3-3-2 Ethernet Cables 3-26
3-3-3 Smart Camera Data Unit Cables 3-34
3-3-4 Junction cable for external lighting 3-42

3-4 Lens Modules 3-43
3-4-1 Specifications 3-43
3-4-2 Dimensions 3-44
3-4-3 Optical Chart 3-46

3-5 C Mount Lenses 3-51
3-5-1 Specifications 3-51
3-5-2 Meaning of Optical Chart 3-61

3-6 Lighting Modules 3-68
3-6-1 Specifications 3-68
3-6-2 Dimensions 3-69

3-7 Optical Filters 3-70
3-7-1 Specifications 3-70
3-7-2 Dimensions 3-71

3-8 Waterproof Hoods 3-72
3-8-1 Specifications 3-72
3-8-2 Dimensions 3-73

3-9 Mounting Fixtures 3-77
3-9-1 Specifications 3-77
3-9-2 Dimensions 3-78

3-10 Waterproof Packings 3-79
3-10-1 Specifications 3-79
3-10-2 Dimensions 3-79
3-11 Waterproof Caps 3-81
3-11-1 Specifications 3-81
3-11-2 Dimensions 3-81
3-12 Lightproof Sheet 3-83
3-12-1 Specifications 3-83
3-12-2 Dimensions 3-83
3-13 Special Covers 3-84
3-13-1 Specifications 3-84
3-13-2 Dimensions 3-84
3-14 Replacement Screws for MicroSD Card Cover 3-86
3-14-1 Specifications 3-86
3-14-2 Dimensions 3-86
3-15 Software 3-87
3-15-1 Remote Operation Tool 3-87
3-15-2 Simulation Software 3-87
3-15-3 Sysmac Studio 3-87

Section 4 Handling and Installation Environment

4-1 Warning 4-2

Section 5 Installation

5-1 Assembling Equipment 5-2
5-1-1 C Mount Lens / IP40 Configuration 5-2
5-1-2 C Mount Lens / IP67 Configuration 5-3
5-1-3 Standard Lens Module / IP40 Configuration 5-5
5-1-4 Standard Lens Module / IP67 Configuration 5-8
5-1-5 High-speed Lens Module / IP40 Configuration 5-10
5-1-6 High-speed Lens Module / IP67 Configuration 5-13
5-1-7 Lens Module / Internal Lighting / IP67 Configuration 5-15
5-2 Mounting the Data Unit for the Smart Camera 5-19
5-2-1 Mounting to DIN Rail 5-19
5-3 Installing the Smart Camera 5-20
5-3-1 How to Connect 5-20
5-3-2 When Connecting the Smart Camera to a Lighting Controller 5-25

Section 6 Power Supply and I/O Interface

6-1 When Turning Power ON and OFF 6-2
6-2 Fail-safe Measures 6-4
6-3 Precautions for I/O Interface 6-5
6-4 I/O Cable Interface (Power Supply, I/O, RS-232C) 6-6
6-4-1 Recommended Power Supply for FHV Series 6-6
6-4-2 Cables 6-7
6-4-3 Pin Layout 6-12
6-4-4 Interface Specifications 6-14
6-4-5 I/O Interface Input / Output Circuit Diagram 6-16
6-4-6 RS-232C Interface 6-18
6-5 Ethernet Interface 6-19

6-5-1 Cables 6-20
6-5-2 Pin Layout 6-24

6-6 Interface for the Data Unit for Smart Camera 6-25
6-6-1 Cables / I/O Connectors, and Terminals 6-26
6-6-2 Pin Layout 6-28
6-6-3 Parallel Interface Specifications 6-32
6-6-4 I/O Interface Input/Output Circuit Diagrams 6-34
6-6-5 EtherCAT Interface Specifications (FHV-SDU30) 6-36

6-7 Inserting and Removing the MicroSD Card 6-38
6-7-1 How to Insert/Remove the MicroSD Card 6-38

Section 7 Software Setup

7-1 Setting up the Software 7-2
7-1-1 Recommended Operational Environment 7-2
7-1-2 Installation 7-3
7-1-3 Windows 7-3
7-1-4 Use Procedures 7-5

7-2 Operating the Smart Camera Remotely [Remote Operation Tool] 7-10
7-2-1 Summary 7-10
7-2-2 Environment Settings 7-11
7-2-3 Network Settings for the Remote Operation PC 7-11
7-2-4 Network Settings for the Smart Camera 7-12
7-2-5 Network Settings for the Smart Camera with Remote Operation Tool 7-14
7-2-6 Launching the Remote Operation 7-14
7-2-7 Terminating the Remote Operation 7-17

7-3 Using the Simulation Software [Simulation Software] 7-18
7-3-1 Introduction 7-18
7-3-2 Available Image Formats 7-18
7-3-3 Operational Precautions 7-18

Index

Terms and Conditions Agreement

Warranty, Limitations of Liability

Warranties

Exclusive Warranty

Omron's exclusive warranty is that the Products will be free from defects in materials and workmanship for a period of twelve months from the date of sale by Omron (or such other period expressed in writing by Omron). Omron disclaims all other warranties, express or implied.

Limitations

OMRON MAKES NO WARRANTY OR REPRESENTATION, EXPRESS OR IMPLIED, ABOUT NON-INFRINGEMENT, MERCHANTABILITY OR FITNESS FOR A PARTICULAR PURPOSE OF THE PRODUCTS. BUYER ACKNOWLEDGES THAT IT ALONE HAS DETERMINED THAT THE PRODUCTS WILL SUITABLY MEET THE REQUIREMENTS OF THEIR INTENDED USE.

Omron further disclaims all warranties and responsibility of any type for claims or expenses based on infringement by the Products or otherwise of any intellectual property right.

Buyer Remedy

Omron's sole obligation hereunder shall be, at Omron's election, to (i) replace (in the form originally shipped with Buyer responsible for labor charges for removal or replacement thereof) the non-complying Product, (ii) repair the non-complying Product, or (iii) repay or credit Buyer an amount equal to the purchase price of the non-complying Product; provided that in no event shall Omron be responsible for warranty, repair, indemnity or any other claims or expenses regarding the Products unless Omron's analysis confirms that the Products were properly handled, stored, installed and maintained and not subject to contamination, abuse, misuse or inappropriate modification. Return of any Products by Buyer must be approved in writing by Omron before shipment. Omron Companies shall not be liable for the suitability or unsuitability or the results from the use of Products in combination with any electrical or electronic components, circuits, system assemblies or any other materials or substances or environments. Any advice, recommendations or information given orally or in writing, are not to be construed as an amendment or addition to the above warranty.

See http://www.omron.com/global/ or contact your Omron representative for published information.

Limitation on Liability; Etc

OMRON COMPANIES SHALL NOT BE LIABLE FOR SPECIAL, INDIRECT, INCIDENTAL, OR CONSEQUENTIAL DAMAGES, LOSS OF PROFITS OR PRODUCTION OR COMMERCIAL LOSS IN ANY

WAY CONNECTED WITH THE PRODUCTS, WHETHER SUCH CLAIM IS BASED IN CONTRACT, WARRANTY, NEGLIGENCE OR STRICT LIABILITY.

Further, in no event shall liability of Omron Companies exceed the individual price of the Product on which liability is asserted.

Application Considerations

Suitability of Use

Omron Companies shall not be responsible for conformity with any standards, codes or regulations which apply to the combination of the Product in the Buyer's application or use of the Product. At Buyer's request, Omron will provide applicable third party certification documents identifying ratings and limitations of use which apply to the Product. This information by itself is not sufficient for a complete determination of the suitability of the Product in combination with the end product, machine, system, or other application or use. Buyer shall be solely responsible for determining appropriateness of the particular Product with respect to Buyer's application, product or system. Buyer shall take application responsibility in all cases.

NEVER USE THE PRODUCT FOR AN APPLICATION INVOLVING SERIOUS RISK TO LIFE OR PROPERTY OR IN LARGE QUANTITIES WITHOUT ENSURING THAT THE SYSTEM AS A WHOLE HAS BEEN DESIGNED TO ADDRESS THE RISKS, AND THAT THE OMRON PRODUCT(S) IS PROPERLY RATED AND INSTALLED FOR THE INTENDED USE WITHIN THE OVERALL EQUIPMENT OR SYSTEM.

Programmable Products

Omron Companies shall not be responsible for the user's programming of a programmable Product, or any consequence thereof.

Disclaimers

Performance Data

Data presented in Omron Company websites, catalogs and other materials is provided as a guide for the user in determining suitability and does not constitute a warranty. It may represent the result of Omron's test conditions, and the user must correlate it to actual application requirements. Actual performance is subject to the Omron's Warranty and Limitations of Liability.

Change in Specifications

Product specifications and accessories may be changed at any time based on improvements and other reasons. It is our practice to change part numbers when published ratings or features are changed, or when significant construction changes are made. However, some specifications of the Product may

be changed without any notice. When in doubt, special part numbers may be assigned to fix or establish key specifications for your application. Please consult with your Omron's representative at any time to confirm actual specifications of purchased Product.

Errors and Omissions

Information presented by Omron Companies has been checked and is believed to be accurate; however, no responsibility is assumed for clerical, typographical or proofreading errors or omissions.

Safety Precautions

Symbols and the Meanings for Safety Precautions Described in This Manual

The following notation is used in this manual to provide precautions required to ensure safe usage of a Sensor Controller. The safety precautions that are provided are extremely important to safety.
Always read and heed the information provided in all safety precautions.
The following notation is used.

WARNING	Indicates a potentially hazardous situation which, if not avoided, will result in minor or moderate injury, or may result in serious injury or death. Additionally there may be significant property damage.
Caution	Indicates a potentially hazardous situation which, if not avoided, may result in minor or moderate injury or in property damage.

Meanings of Alert Symbols

	General Prohibition Indicates general prohibitions, including warnings, for which there is no specific symbol
	General Caution Indicates general cautions, including warnings, for which there is no specific symbol.
	The filled circle symbol indicates operations that you must do. The specific operation is shown in the circle and explained in text. This example shows a general precaution for something that you must do.
	Electrical Hazard Indicates the possible danger of electric shock under specific conditions.
	LED light Hazard Indicates the possible danger of LED radiation or light.
	High Temperature Caution Indicates the possible danger of injury by high temperature under specific conditions.

Warning

⚠ WARNING

This product must be used according to this manual and Instruction Sheet.
Failure to observe this may result in the impairment of functions and performance of the product.

This product is not designed or rated for ensuring the safety of persons.
Do not use it for such purposes.

Never connect the AC power supply with this product. When the AC power supply is connected, it causes the electric shock and a fire.

If you keep watching the LED light, it may have an adverse effect on the eyes, do not stare directly into the light emitted from the LED. If a specular object is used, take care not to allow reflected light to enter your eyes.

Do not touch the terminals while the power supply is ON.
Doing so may result in electrical shock.

Please take external safety measures so that the system as a whole should be on the safe side even if a failure of a smart camera or an error due to an external factor occurred. An abnormal operation may result in serious accident.

Please take fail-safe measures on your side in preparation for an abnormal signal due to signal conductor disconnection and/or momentary power interruption.
An abnormal operation may result in a serious accident.

Anti-virus protection
Install the latest commercial-quality antivirus software on the computer connected to the control system and maintain to keep the software up-to-date.

Security measures to prevent unauthorized access
Take the following measures to prevent unauthorized access to our products.
- Install physical controls so that only authorized personnel can access control systems and equipment.
- Reduce connections to control systems and equipment via networks to prevent access from untrusted devices.
- Set strong passwords and change them frequently.
- Scan virus to ensure safety of USB drives or other external storages before connecting them to control systems and equipment.

Data input and output protection
Validate backups and ranges to cope with unintentional modification of input/output data to control systems and equipment.
- Checking the scope of data
- Checking validity of backups and preparing data for restore in case of falsification and abnormalities
- Safety design, such as emergency shutdown and fail-soft operation in case of data tampering and abnormalities

Data recovery
Backup data and keep the data up-to-date periodically to prepare for data loss.

When using an intranet environment through a global address, connecting to an unauthorized terminal such as a SCADA, HMI or to an unauthorized server may result in network security issues such as spoofing and tampering. You must take sufficient measures such as restricting access to the terminal, using a terminal equipped with a secure function, and locking the installation area by yourself.

When constructing an intranet, communication failure may occur due to cable disconnection or the influence of unauthorized network equipment. Take adequate measures, such as restricting physical access to network devices, by means such as locking the installation area.

When using a device equipped with the USB flash drive or SD Memory Card function, there is a security risk that a third party may acquire, alter, or replace the files and data in the removable media by removing the removable media or unmounting the removable media. Please take sufficient measures, such as restricting physical access to the Controller or taking appropriate management measures for removable media, by means of locking the installation area, entrance management, etc., by yourself.

⚠ Caution

Danger of burns. Do not touch the case while the power is ON or just after power is turned OFF, since it remains extremely hot.

When mounting the lighting module, lens module, and covers, make sure that the screws are tightened securely. If not, the product may break or malfunction, or injury may result.

Precautions for Safe Use

Condition of the Fitness of OMRON Products

- *Omron products* are designed and manufactured as general-purpose products for use in general industrial applications. They are not intended to be used in the following critical applications. If you are using *Omron products* in the following applications, *Omron* shall not provide any warranty for such *Omron products*, unless otherwise specifically agreed or unless the specific applications are intended by Omron.
  a) Applications with stringent safety requirements, including but not limited to nuclear power control equipment, combustion equipment, aerospace equipment, railway equipment, elevator/lift equipment, amusement park equipment, medical equipment, safety devices and other applications that could cause danger/harm to people's body and life.
  b) Applications that require high reliability, including but not limited to supply systems for gas, water and electricity, etc., 24 hour continuous operating systems, financial settlement systems and other applications that handle rights and property.
  c) Applications under severe condition or in severe environment, including but not limited to outdoor equipment, equipment exposed to chemical contamination, equipment exposed to electromagnetic interference and equipment exposed to vibration and shocks.
  d) Applications under conditions and environment not described in specifications.

1. In addition to the applications listed from (a) to (d) above, *Omron products* (see definition) are not intended for use in vehicles designed human transport (including two wheel vehicles). Please do NOT use Omron products for vehicles designed human transport. Please contact the Omron sales staff for information on our automotive line of products.
2. The above is part of the Terms and Conditions Agreement. Please use carefully read the contents of the guarantee and disclaimers described in our latest version of the catalog, data sheets and manuals.

Installation Environment

- Do not use the product in areas where flammable or explosive gases are present.
- Do not install the product close to high-voltage devices and power devices in order to secure the safety of operation and maintenance.
- Do not install the product to a place where vibrations and/or impacts are expected.
- Do not install the product near to a device causing noises. if the product is installed in a noisy environment and operational errors are caused, be sure to take shielding measures.

Power Supply and Wiring

- Make sure to use the product with the power supply voltage specified. If a DC voltage exceeding the rating or an AC voltage is applied, the circuit parts may be burnt or exploded.
- Do not connect the power supply with polarity reversed.
- Use a DC power supply with safety measures against high-voltage spikes (safety extra low-voltage circuits on the secondary side).
- Use an independent power source for this product. Do not use a shared power source.

- Never apply more than the rated voltage or AC power supply to this product. It may cause malfunction.
- The recommended power supplies are as follows:
  - When attaching the lighting module, use S8VK-G12024 (OMRON) or S8VS-12024 (OMRON).
  - When not attaching the lighting module, use S8VK-G06024 (OMRON) or S8VS-06024 (OMRON).
- Wire high-voltage cables or power cables are separated from the cables of this product. If the same cable or duct is used, the product may receive induction and it may cause malfunctioning or breakage.
- Do not short-circuit the load on the open collector output.
- Apply load not exceeding the rating.
- When wiring, attach a crimp terminal of the specified size. Do not connect wires simply twisted together to the power supply or terminal block directly.
- Do not stress cables or connectors.
- Cut off unnecessary signal wires so that they do not contact any other signal wires.
- After wiring the cables, confirm if the power supply is appropriate, if there is miswiring such as short-circuit of load, if the load current is appropriate, and if FG is connected appropriately. Otherwise, the product may be broken due to miswiring etc.
- Take enough safety measures such as a failsafe circuit before using the product.
- Be sure to apply Class D grounding (100Ω or lower grounding resistance) to the case of the smart camera and the ground wire of the I/O cable. Be sure to apply Class D grounding (100Ω or lower grounding resistance) to the ground wire of the SDU body.
- Do not share the ground wire with some other devices or connect it to the beam of the building. The product may be adversely affected.
- Determine the contact point as near as possible to shorten the ground wire as much as possible. The product may be adversely affected.
- If grounding the positive wire, refer to the precautions described in this setup manual.

Mounting

- When doing the following, be sure to turn OFF the power of the smart camera main unit or connected peripheral devices. Not doing so leads to a product failure.
  - Cable connection and wiring
  - Connector mounting/removal
  - Lighting module mounting/removal
  - Lens module mounting/removal
- Tighten the mounting screws securely using the defined torque and order described in the Setup Manual.
- Mount the lens module in the correct direction. Mounting it in the wrong direction may cause malfunction of the device or injury.
- After removing the cable, be sure to put the connector cap. If the connector cap is not put, the product may malfunction or be broken due to entering of foreign materials.
- Do not apply torsional stress to the cable. Doing so may cause cable breakage.
- Secure the minimum bending radius of the cable. If it cannot be secured, the cable may be broken.
- Assemble as avoiding the waterproof packings and harnesses from being caught by the case, etc.
- Do not use any damaged waterproof packings and light shielding sheet or assemble the product with foreign materials attached to or caught in.

- Mount the lens module and lighting model in the correct direction. Mounting them in the wrong direction may cause broken or malfunction of the device, or injury.
- Do not touch the lens or image sensor with bare hands. Doing so may lead to malfunctioning or breakage.
  Assemble the lens and image sensor with a correct combination. if not, malfunction may result.

Others

- Use only the dedicated cable (FHV-VN□/FHV-VD□/FHV-VU□/FHV-VFLX-GD), camera-mount lighting controller (FL-TCC□/FLV-TCC□), external lighting (FL-MD□MC), lighting module (FHV-LTM-□), and lens module (FHV-LEM-□). Otherwise, the product may malfunction or be broken.
- When the camera-mount lighting controller (FL-TCC1PS) or the external lighting (FL-MD□MC) is used, be sure to attach the junction cable (FHV-VFLX-GD) between the Smart Camera and the lighting.
- If anything abnormal occurs, for example, strange smell/sound is detected, the main unit gets very hot, or a smoke comes, stop using the product, turn OFF the product, and consult OMRON's branch or sales office.
- Do not disassemble, deform by pressurizing, incinerate, repair, or alter this product.
- When disposing of the product, treat as industrial waste.
- Do not drop the product or expose it to abnormal vibration or impact. Doing so may lead to product failure.
- If using the measurement result of the smart camera to operate the stage or robot (output of axis moving distance by calibration and alignment measurement), be sure to take failsafe measures externally.
- The waterproof packing and light shielding sheet are rubber products. Avoid storing them in a location where rubber deteriorates.

Precautions for Correct Use

Installation Location

In order to prevent the product from becoming inoperable or malfunction, and to prevent other adverse effects to the performance or equipment, please observe the following.

- A location where the ambient temperature and relative humidity does not exceed the rated range.
- A location where the temperature does not vary sharply (condensation occurs).
- A location not exposed to corrosive gases or combustible gases.
- A location not exposed to dust, salt, or metal powder.
- A location not exposed to direct vibration or impact.
- A location not exposed to strong disturbance light (laser light, arc welding light, or ultraviolet light).
- A location not near a heating appliance or exposed to direct sunlight.
- A location not exposed to mist of water, oil, or chemicals or misty atmosphere.
- A location not exposed to strong magnetic/electric fields.
- A location not near a high-voltage device or power device
- A location where rubber quality is not deteriorated.

Power Supply, Connection, and Wiring

- If the power supply line has surge, connect a surge absorber according to the operational environment to use the product.
- To use the product in an environment with strong noise, use a noise filter (Omron's S8V-NFS206 or equivalent) for the smart camera's power input block.
- If contacting a terminal or a signal cable inside the connector, use a wrist strap to take antistatic measures to prevent breakage due to static electricity.
- When connecting cables, align terminals and connect them straightly. If not, the terminals bent and may cause malfunction or unable to communicate normally.
- If using an I/O cable 20 m long, confirm that the power supply output is 24 VDC or higher. If it is lower than 24 VDC, the product does not operate.
- The RS-232C communication standard defines the maximum cable length as 15 m. Implement this communication using an I/O cable 2/3/5/10 m long.
- Do not use the product in environments subject to water droplets when an external lighting is connected. The main unit may be broken.
- Do not turn OFF the power supply while data are being saved in the smart camera. Otherwise, data on the memory is broken, so the product does not operate normally when started up next time.
- When a message indicating that processing is being executed is displayed on the screen, do not turn OFF the power. Otherwise, data on the memory is broken, so the product does not operate normally when started up again.
- When turning OFF the power, confirm that data have been saved completely before starting operations.
  - When data are saved by operating the smart camera, the saving process must have been completed and the following user operations must be possible.
  - When data are saved using communication commands, processing of the applicable commands must have been completed and the busy state is OFF.
- After turning off the power, wait at least 1 second before restarting.

- When the camera-mount lighting controller (FL-TCC1PS) or the external lighting (FL-MD□MC) is used, be sure to attach the junction cable (FHV-VFLX-GD) between the smart camera and the lighting.
  Otherwise, leads to malfunction or damage.
- Do not insert the microSD card inversely, obliquely, or as twisting it.
- While data are being read in or written to the microSD card, the SD ACCESS LED on the Smart Camera main unit is turned on for a while. Remove the card after confirming that the LED is completely turned off.
- Except when inserting or removing the microSD card, put the cover of the microSD card inserting connector and screw it up before using the product.

Maintenance

- Turn OFF the power and confirm safety before starting maintenance.
- Remove dirt on the lens using the special cloth for lens or an air brush.
- If a large dust attaches to the image sensor, use the blower brush (for the camera lens) to blow it off. Do not blow it off with your exhaled air.
- Do not use thinner, alcohol, benzene, acetone, or kerosene to clean this product.
- When the lens or lens module is not being mounted, be sure to attach the C mount cap to the lens mounting part. If a dust attached to the image sensor, the product may sense incorrectly or be broken.
- Wipe off dirt on this product with a soft cloth gently.

Beam

- The beam center may vary product by product. When mounting this module, be sure to confirm the center position of the video on the monitor.
  The beam center of this product may vary over a couple of pixels due to the variation of ambient temperature because of the material characteristics.
- Select the model by confirming the field of view and camera installation distance on the optical diagram. In addition, the field of view may vary product by product.
  When mounting this product, be sure to confirm video using the monitor.

Image Sensor

- For this product, a line may appear depending on the measurement condition or sensitivity because of the specification of the image sensor.
  However, this is not a fault or failure of the product. In addition, although there may be multiple defective pixels, this is not a fault or failure of the product. Use the product as confirming the actual image.

Communications with Upper Equipment

- After confirming that this product is started up,communicate with the high-order device.
  During start-up, an indefinite signal may be output to the high-order interface.
  To avoid this problem, clear the receiving buffer of your device at initial operations.

Failsafe Measures

- When operating a stage or robot using measurement results of the Smart Camera (axis moving distance output by the calibration or alignment measurement), take measures as follows: Be sure to operate the stage or robot after confirming the measurement result data on the stage or robot side that the data are within the movable range of the stage or robot.

Warm-up

- Turn ON the power and wait for 60 minutes or more before conducting precise inspection. The circuit is not stable directly after the power is turned ON, so brightness may vary gradually.

Camera Installation

- In a hot and humid environment, Condensation may occur if stored, assembled, or used.
  If cloudy, remove the lighting cover or water-proof hood and wipe off the inside with a soft cloth.
  If condensation remains, keep the product under normal temperature and normal humidity (around 25°C and 50%RH) with its power ON for about two hours before assembling the waterproof hood and lighting module.
- If installing smart camera main units side by side, secure a space of 30 mm or more wide between them.

Others

- For better heat radiation, use the separately sold fitting (FHV-XMT-7) or mount the product to the metal frame (recommended size: 100×110 mm or more and thickness: 10 mm or more).
- There are two types of polarizing filters: FHV-XPL (for visible light) and FHV-XPL-IR (for both visible and infrared lights). Use the appropriate option according to the illumination light source.
- If switching the focus for a long period of time continuously except when installing and adjusting lens module (FHV-LEM-S□), performance may be degraded due to heat generation or abrasion of inner parts.
- When lens module(FHV-LEM-S□) is mounted to the product, the specificatins of vibration tolerance are changed.
- Do not touch the lens module after it is mounted. Otherwise, it may be broken.
- If using this product without attaching the lighting module in an environment needing waterproof, use waterproof hood FHV-XHD series.
- Operate the product by using Calculation and Branch processing items on the Smart Camera side additionally and creating a check flow, for example, if the stage or robot is within a range of -xxxxx to xxxxx from its movable range, data are not output to outside.
- The lighting module and lens module are fixed to the smart camera with dropout preventing screws. Do not remve them from the product.
- When turning on the FHV series, the date/time settings always returns to the default. Therefore, you need to re-set the date/time with an operation or a communication command every time at startup. For details of communication commands, refer to each communication command in the *Vision System FH/FHV Series User's Manual for Communications Settings (Cat. No.Z342)*.
- The Super Bend Resistant cables (FHV-VNBX/FHV-VNLBX, FHV-VDBX/FHV-VDLBX, FHV-VUBX/FHV-VULBX) do not protect against water. (If using them, the IP Protection level for the smart camera will not be IP67, but rather IP60.) If protection against water is required, please use a Super

Bend Resistant cable (FHV-VNBX2/FHV-VNLBX2, FHV-VDBX2/FHV-VDLBX2, FHV-VUBX2/FHV-VULBX2), or Bend Resistant cable (FHV-VNB2/FHV-VNLB2/FHV-VNB/FHV-VNLB, FHV-VDB2/FHV-VDLB2/FHV-VDB/FHV-VDLB, FHV-VUB2/FHV-VULB2/FHV-VUB/FHV-VULB).

Security

- To ensure the security of the entire system, implement the following measures on a host device such as a PLC.
  - Access control is performed so that only authorized users can operate the host device.
  - A log is recorded on the host device for events from the host device to this product.

  If these measures are not implemented, unauthorized access or operation via the host devices may occur. In addition, when unauthorized access or operation occurs, the history is not recorded, and it may be difficult to identify the event that occurred and the scope of impact.

LED Safety

This product is classified into the following risk groups.

Model	Color	IEC62471		GB/T 30117.1-2024
		LED safety	Display	LED safety
FHV-LTM-W	White	Exempt group	None	Exempt group
FHV-LTM-R	Red	Exempt group	None	Exempt group
FHV-LTM-IR	Infrared light	Exempt group	None	Exempt group
FHV-LTM-MC	Red	Exempt group	None	Exempt group
	Green	Exempt group	None	Exempt group
	Blue	Exempt group	None	Exempt group
	Infrared light	Risk group 1	NOTICE IR emitted from this product Risk Group 1 IEC 62471	Risk group 1 • Wavelength: 850 nm • Radiant power: 15 mW • Continuous illumination

Regulations and Standards

Using Product Outside Japan

If you export (or provide a non-resident with) this product or a part of this product that falls under the category of goods (or technologies) specified by the Foreign Exchange and Foreign Trade Control Law as those which require permission or approval for export, you must obtain permission or approval or service transaction permission) pursuant to the law.

Conformance to KC Standards

Observe the following precaution if you use this product in Korea.

사 용 자 안 내 문
이 기기는 업무용 환경에서 사용할 목적으로 적합성평가를 받은 기기로서
가정용 환경에서 사용하는 경우 전파간섭의 우려가 있습니다.

- Guidance for users
  This product meets the electromagnetic compatibility requirements for business use. There is a risk of radio interference when this product is used in home.

Conformance to EC/EU Directives and UK Legislations

The product is compliant with the standards below:

- EU Directive 2014/30/EU (After April 20 2016)/EU/UK legislations 2016 No 1091 Electromagnetic Compatibility Regulations 2016 EN61326-1
  Electromagnetic environment : Industrial electromagnetic environment (EN/IEC 61326-1 Table 2)
- This product complies with EC/EU Directives. EMC-related performance of the OMRON devices that comply with EC/EU Directives will vary depending on the configuration, wiring, and other conditions of the equipment or control panel on which the OMRON devices are installed.
- The customer must, therefore, perform the final check to confirm that devices and the overall machine conform to EMC standards.

WEEE Directive

Dispose of in accordance with WEEE Directive

Related Manuals

The followings are the manuals related to this manual. Use these manuals for reference.

Name of Manual	Cat. No.	Model	Purpose	Contents
Smart Camera FHV Instruction Sheet	5888851-0	FHV7□-□□□□□-□□□-□□	To confirm the safety and usage precautions of the smart camera FHV7 series.	Describes the definitions of basic terms, the meaning of signal words, and precautions for correct use of FHV7 series in the manual.
Smart Camera Lighting Module FHV-LTM Instruction Sheet	3129276-4	FHV-LTM□□	To confirm the safety and usage precautions of the smart camera lighting module FHV-LTM.	Describes the definitions of basic terms, the meaning of signal words, and precautions for correct use of the lighting module FHV-LTM in the manual.
Smart Camera Lens Module FHV-LEM-S Instruction Sheet	3128622-5	FHV-LEM-S□□	To confirm the safety and usage precautions of the smart camera lens module FHV-LEM-S.	Describes the definitions of basic terms, the meaning of signal words, and precautions for correct use of the lens module FHV-LEM-S.
Smart Camera Lens Module FHV-LEM-H Instruction Sheet	3129408-2	FHV-LEM-H□□	To confirm the safety and usage precautions of the smart camera lens module FHV-LEM-H.	Describes the definitions of basic terms, the meaning of signal words, and precautions for correct use of the lens module FHV-LEM-H.
Smart Camera Data Unit FHV Instruction Sheet	3130057-0	FHV-SDU□□	To confirm the safety and usage precautions of the smart camera Data Unit.	Describes the definitions of basic terms, the meaning of signal words, and precautions for correct use of the smart camera data unit in the manual.
FHV Series Smart Camera Setup Manual	Z408	FHV7□-□□□□□-□□□-□□	When user want to know about the hardware specifications or to setup the smart camera FHV series.	Describes FHV series specifications, dimensions, part names, I/O information, installation information, and wiring information.
Vision System FH Series Oreration Manual for Sysmac Studio	Z343	FH-2□□□ FH-2□□□-□□ FH-5□□□ FH-5□□□-□□	When user connect to NJ series via EtherCAT communication.	Describes the operating procedures for setting up and operating FH series Vision Sensors from the Sysmac Studio FH Tools.
Vision System FH/FHV Series User's Manual	Z365	FH-1□□□ FH-1□□□-□□ FH-2□□□ FH-2□□□-□□ FH-3□□□ FH-3□□□-□□ FH-5□□□ FH-5□□□-□□ FH-L□□□ FH-L□□□-□□ FHV7□-□□□□□-□□□-□□	When user want to know about the FH/FHV series.	Describes the soft functions, setup, and operations to use FH/FHV series/
Vision System FH/FHV Series Processing Item Function Reference Manual	Z341		When user confirm the details of each processing items at the create the measurement flow or operate it.	Describes the software functions, settings, and operations for using FH/FHV series.
Vision System FH/FHV Series User's manual for Communications Settings	Z342		When user confirm the setting of communication functions.	Describes the functions, settings, and communications methods for communication between FH/FHV series and PLCs. The following communications protocol are described. Parallel, PLC Link, EtherNet/IP, EtherCAT, and Non-procedure.

Terminology

Term	Definition
FHV Series	All FHV series model names.
Measurement flow (abbreviated as “flow”)	A continuous flow of measurement processing. A measurement flow consists of a scene created from a combination of processing items.
Measurement processing	Executing processing items for inspections and measurements.
Measurement ID	Measurement ID: YYYY-MM-DD_HH-MM-SS-XXXN (YYYY: Year, MM: Month, DD: Date, HH: Hour, MM: Minute, SS: Second, XXX: Millisecond, N: Line number) • Example: When the measurement time is 11:10:25.500 AM, December 24, 2007 and the line is 0, the measurement ID is "2007-12-24_11-10-25-5000".
Processing item	Any of the individual items for vision inspections that are partitioned and packaged so that they can be flexibly combined. These include the Search, Position Compensation, and Fine Matching items. Processing items can be classified for image input ([Input image]), inspection/measurement ([Measurement]), image correction ([Compensate image]), inspection/measurement support ([Support measurement]), process branching ([Branch]), results external output ([Output result]), resulting image display ([Display result]), etc. You can freely classify processing items to handle a wide range of applications. A scene (i.e., a unit for changing the measurement flow) is created by registering the processing items as units.
Scene	A unit for changing the measurement flow that consists of a combination of processing items. Scene is used because of the correspondence to the scene (i.e., type of measurement object and inspection contents) where measurements are performed. A scene is created for each measurement or measurement contents. You can easily achieve a changeover simply by changing the scene when the measurement object or inspection content changes. Normally you can set up to 128 scenes. If you need more than 128 scenes, you can separate them into different groups or use the Conversion Scene Group Data Tool to create a scene group that contains over 128 scenes.
Processing unit (abbreviated as *unit*)	A processing item that is registered in a scene. Numbers are assigned to processing units in order from the top and they are executed in that order. Processing items are registered for the processing units to create a scene (i.e., a unit for changing the measurement flow).
Measurement trigger	A trigger for executing measurements. (STEP signal, etc.) (In addition to measurement trigger, measurement can also be executed by measurement command.)
Test measurement	A measurement that is performed to manually test (check) measurements under the conditions that are set in the currently displayed scene. Test measurements can be executed on an Adjustment Window. Processing is completed inside the Controller and the measurement results are not normally output on an external interface. However, if you checked **Output** in test measurement to output the measurement results after executing measurements.
Single measurement	A measurement that is executed only once in synchronization with the trigger input.
Continuous measurement	Measurements are executed repeatedly and automatically without a trigger input.

Term	Definition
Operation mode	• Double Speed Multi-input A mode that processes the measurement flow for the first trigger and then processes the measurement flow in parallel for the second trigger to achieve a high-speed trigger input interval. It is used together with the multi-input function. • Non-stop adjustment mode A mode that allows you to adjust the flow and set parameters while performing measurements. The enables adjustments without stopping the line or stopping inspections. • Standard A logging mode that allows complete parallel processing of measurements and logging. Traditionally, logging was not possible while processing measurements. Either measurements or logging had to be given priority and the other one had to wait. With this mode, you can save the measurement images in external storage without affecting the transaction time.
Parallel processing (an option for any of the above operation modes)	Parallel processing splits part of the measurement flow into two or more tasks, and processes each task in parallel to shorten the transaction time. Processing items for parallel processing are used so that the user can specify the required parallel processing.
Multi-input function	A function that is used to consecutively and quickly input images. It allows the next STEP signal to be acknowledged as soon as the image input processing is completed. There is no need to wait for measurement processing to be completed. You can check whether image input processing has been completed with the status of the READY signal. Even if the READY signal is ON when measurement processing is being executed, the next STEP signal can be acknowledged.

Term	Definition
Position compensation	When the location and direction of measured objects are not fixed, the positional deviation between reference position and current position is calculated and measurement is performed after correcting. Please select processing items that are appropriate to the measurement object from processing items that are related to position compensation. 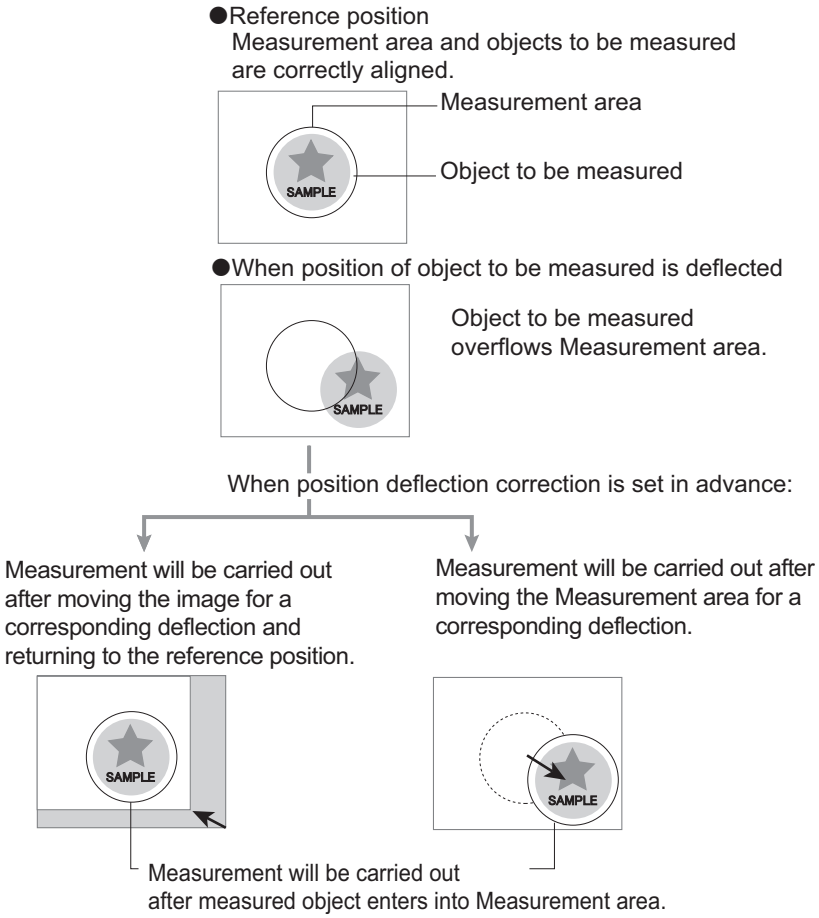
Reference position	The point that is always the reference. If the location of the registered model is different from the reference position, the setting should be changed in **Ref. setting**.
Model	The image pattern that serves as the inspection target. Characteristics portions are extracted from images of the object and registered as model registration.

Term	Definition
2's complement	Binary numbers are generally used to represent negative numbers. Negative numbers are expressed by *Inverting all bits of a positive number and adding 1 to the result*. Ex. *-1* is expressed as 2's complement. *-1* can be calculated by *0-1*. (In the case of 1, minus 1) 00000000 (= 0) -) 00000001 (= 1) 11111111 (=-1) ⇦ −“1” expresses with 2’s Complement (for 8 bits) There are methods for simple calculation without performing this kind of computation. For instance, *Negative number = inverting all bits of a positive number and then adding 1 to the result*. 00000001 (= 1) ↓ Invert all bits 11111110 ↓ Plus 1 11111111 (=-1) The *first digit* is used to judge whether the number is positive or negative. • When 0: Positive number (or 0) • When 1: Negative number The advantage of two's complement numbers is that positive and negative numbers can be used as is in calculations. Ex. When -1+10=9 11111111 (= -1) +)00001010 (= 10) 00001001 (= 9)

Revision History

A manual revision code appears as a suffix to the catalog number on the front and back covers of the manual.

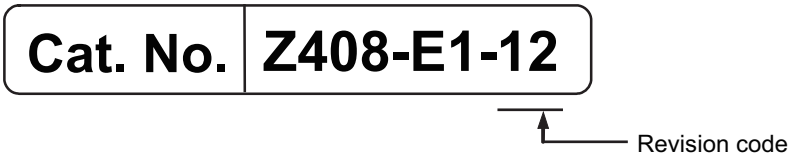

Revision code	Date	Revised content
01	Nov. 2018	Original production.
02	Jul. 2019	Added Smart Camera data unit and High-speed lens module etc.
03	Nov. 2019	Added precautions for use of Super bending resistance cable. Minor correction.
04	Oct. 2021	Minor correction.
05	Sep. 2022	Revisions for adding safety precautions regarding security. Minor correction.
06	Dec. 2022	Added FHV7X series. Added models for I/O cables, Ethernet cables, smart camera data unit cables, and waterproof caps. Revisions for update *Precautions for Safe Use*, *Precautions for Correct Use*, *Regulations and Standards*, *Related Manuals*. Added Sysmac Studio Ver.1.53. Minor correction.
07	Mar. 2023	Revisions for *Recommended Operational Environment* for the Remote Operation tool, the simulation software, and the FH/FHV Launcher.
08	Mar. 2024	Added *Available List of Smart Camera and Software Versions*. Added *7-1 Setting up the Software* and *7-2 Operating the Smart Camera Remotely [Remote Operation Tool]*. Minor correction.
09	Aug. 2024	Added XW2K-34G-T.
10	Oct. 2024	Added NYE2A-20F11-□□WR1□00 Minor correction.
11	Jun. 2025	Revisions for *3-15-3 Sysmac Studio*. Minor correction.
12	Sep. 2026	Revisions for update *Precautions for Correct Use*, *Related Manuals*, *2-2 Flow of Use Procedure*, *3-6 Lighting Modules*, and *3-15-3 Sysmac Studio*. Added FHV7Y series.

1

Confirm the Package

1-1 Smart Camera 1-2

1-1-1 FHV7□-□□□□□-C Series 1-2
1-1-2 FHV7□-□□□□□-S□□ Series 1-2
1-1-3 FHV7□-□□□□□-H□□ Series 1-3
1-1-4 FHV7□-□□□□□-S□□-□□ Series 1-3
1-1-5 FHV7□-□□□□□-H□□-□□ Series 1-4

1-2 Sold Separately 1-5

1-2-1 Smart Camera Data Unit 1-5
1-2-2 Cables 1-5
1-2-3 Modules 1-9
1-2-4 Accessories 1-10
1-2-5 Lighting and Lighting Controller 1-12
1-2-6 Touch Panel Monitor 1-13
1-2-7 Software 1-14

1-1 Smart Camera

First, please check to see whether the package has all the necessary smart camera parts.

1-1-1 FHV7□-□□□□□□-C Series

- Smart Camera: FHV7□-□□□□□□-C
- Connector cap for Ethernet cable (mounted on the body): 1
- Connector cap for an external lighting (mounted on the body): 1
- C mount cap (mounted on the body): 1
- C mount cover (mounted on the body): 1
- Instruction sheet: 1
- Membership registration: 1
- General Compliance Information and Instructions for EU: 1

1-1-2 FHV7□-□□□□□□-S□□ Series

- Smart Camera: FHV7□-□□□□□□-S□□
- Connector cap for Ethernet cable (mounted on the body): 1
- Connector cap for an external lighting (mounted on the body): 1
- Special cover for FHV-LEM-S (mounted on the body): 1
- Instruction sheet: 1 each (Body, and lens module)
- Membership registration: 1
- General Compliance Information and Instructions for EU: 1

1-1-3 FHV7□-□□□□□-H□□ Series

- Smart Camera: FHV7□-□□□□□-H□□
- Connector cap for Ethernet cable (mounted on the body): 1
- Connector cap for an external lighting (mounted on the body): 1
- Special cover for FHV-LEM-H (mounted on the body): 1
- Instruction sheet: 1 each (Body, and lens module)
- Membership registration: 1
- General Compliance Information and Instructions for EU: 1

1-1-4 FHV7□-□□□□□-S□□-□□ Series

- Smart Camera: FHV7□-□□□□□-S□□-□□
- Connector cap for Ethernet cable (mounted on the body): 1
- Connector cap for an external lighting (mounted on the body): 1
- Instruction sheet: 1 each (Body, lens module, and lighting module)
- Membership registration: 1
- General Compliance Information and Instructions for EU: 1

1-1-5 FHV7□-□□□□□-H□□-□□ Series

- Smart Camera: FHV7□-□□□□□-H□□-□□
- Connector cap for Ethernet cable (mounted on the body): 1
- Connector cap for an external lighting (mounted on the body): 1
- Instruction sheet: 1 each (Body, lens module, and lighting module)
- Membership registration: 1
- General Compliance Information and Instructions for EU: 1

1-2 Sold Separately

1-2-1 Smart Camera Data Unit

Appearance	Description	Model
	Parallel interface for Smart Camera data unit Extension unit for Parallel I/O signals	FHV-SDU10
	EtherCAT interface for Smart Camera data unit Communication unit for EtherCAT interface	FHV-SDU30

1-2-2 Cables

I/O Cables

Appearance	Description	Model
	I/O cable bending resistance straight Cable length: 2 m, 3 m, 5 m, 10 m, 20 m	FHV-VDB2 2M FHV-VDB2 3M FHV-VDB2 5M FHV-VDB2 10M FHV-VDB2 20M
	I/O cable bending resistance right-angle Cable length: 2 m, 3 m, 5 m, 10 m, 20 m	FHV-VDLB2 2M FHV-VDLB2 3M FHV-VDLB2 5M FHV-VDLB2 10M FHV-VDLB2 20M
	I/O cable super bending resistance straight Cable length: 5 m, 10 m	FHV-VDBX2 5M FHV-VDBX2 10M
	I/O cable super bending resistance right-angle Cable length: 5 m, 10 m	FHV-VDLBX2 5M FHV-VDLBX2 10M

Appearance	Description	Model
	I/O cable bending resistance straight Cable length: 2 m, 3 m, 5 m, 10 m, 20 m	FHV-VDB 2M FHV-VDB 3M FHV-VDB 5M FHV-VDB 10M FHV-VDB 20M
	I/O cable bending resistance right-angle Cable length: 2 m, 3 m, 5 m, 10 m, 20 m	FHV-VDLB 2M FHV-VDLB 3M FHV-VDLB 5M FHV-VDLB 10M FHV-VDLB 20M
	I/O cable super bending resistance straight Cable length: 2 m, 3 m, 5 m, 10 m	FHV-VDBX 2M FHV-VDBX 3M FHV-VDBX 5M FHV-VDBX 10M
	I/O cable super bending resistance right-angle Cable length: 2 m, 3 m, 5 m, 10 m	FHV-VDLBX 2M FHV-VDLBX 3M FHV-VDLBX 5M FHV-VDLBX 10M

Ethernet Cables

Appearance	Description	Model
	Ethernet cable bending resistance straight Cable length: 2 m, 3 m, 5 m, 10 m, 20 m	FHV-VNB2 2M FHV-VNB2 3M FHV-VNB2 5M FHV-VNB2 10M FHV-VNB2 20M
	Ethernet cable bending resistance right-angle Cable length: 2 m, 3 m, 5 m, 10 m, 20 m	FHV-VNLB2 2M FHV-VNLB2 3M FHV-VNLB2 5M FHV-VNLB2 10M FHV-VNLB2 20M
	Ethernet cable super bending resistance straight Cable length: 5 m, 10 m	FHV-VNBX2 5M FHV-VNBX2 10M
	Ethernet cable super bending resistance right-angle Cable length: 5 m, 10 m	FHV-VNLBX2 5M FHV-VNLBX2 10M

Appearance	Description	Model
	Ethernet cable bending resistance straight Cable length: 2 m, 3 m, 5 m, 10 m, 20 m	FHV-VNB 2M FHV-VNB 3M FHV-VNB 5M FHV-VNB 10M FHV-VNB 20M
	Ethernet cable bending resistance right-angle Cable length: 2 m, 3 m, 5 m, 10 m, 20 m	FHV-VNLB 2M FHV-VNLB 3M FHV-VNLB 5M FHV-VNLB 10M FHV-VNLB 20M
	Ethernet cable super bending resistance straight Cable length: 2 m, 3 m, 5 m, 10 m	FHV-VNBX 2M FHV-VNBX 3M FHV-VNBX 5M FHV-VNBX 10M
	Ethernet cable super bending resistance right-angle Cable length: 2 m, 3 m, 5 m, 10 m	FHV-VNLBX 2M FHV-VNLBX 3M FHV-VNLBX 5M FHV-VNLBX 10M

Smart Camera Data Unit Cable

Appearance	Description	Model
	Smart Camera data unit cable bending resistance straight Cable length: 2 m, 3 m, 5 m, 10 m, 20 m	FHV-VUB2 2M FHV-VUB2 3M FHV-VUB2 5M FHV-VUB2 10M FHV-VUB2 20M
	Smart Camera data unit cable bending resistance right-angle Cable length: 2 m, 3 m, 5 m, 10 m, 20 m	FHV-VULB2 2M FHV-VULB2 3M FHV-VULB2 5M FHV-VULB2 10M FHV-VULB2 20M
	Smart Camera data unit cable super bending resistance straight Cable length: 5 m, 10 m	FHV-VUBX2 5M FHV-VUBX2 10M

Appearance	Description	Model
	Smart Camera data unit cable super bending resistance right-angle Cable length: 5 m, 10 m	FHV-VULBX2 5M FHV-VULBX2 10M
	Smart Camera data unit cable bending resistance straight Cable length: 2 m, 3 m, 5 m, 10 m, 20 m	FHV-VUB 2M FHV-VUB 3M FHV-VUB 5M FHV-VUB 10M FHV-VUB 20M
	Smart Camera data unit cable bending resistance right-angle Cable length: 2 m, 3 m, 5 m, 10 m, 20 m	FHV-VULB 2M FHV-VULB 3M FHV-VULB 5M FHV-VULB 10M FHV-VULB 20M
	Smart Camera data unit cable super bending resistance straight Cable length: 2 m, 3 m, 5 m, 10 m	FHV-VUBX 2M FHV-VUBX 3M FHV-VUBX 5M FHV-VUBX 10M
	Smart Camera data unit cable super bending resistance right-angle Cable length: 2 m, 3 m, 5 m, 10 m	FHV-VULBX 2M FHV-VULBX 3M FHV-VULBX 5M FHV-VULBX 10M

Junction Cable for External Lighting

Appearance	Description	Model
	Junction cable for external lighting (For MDMC and Photometric Stereo lightings) Cable length: 0.1 m	FHV-VFLX-GD

1-2-3 Modules

Lens Modules

High-speed Lens Modules

Appearance	Focal distance	Model	Package contents
	6 mm	FHV-LEM-H06	• Main unit: 1 • Special cover for FHV-LEM-H: 1 • Screws: M3×8 mm: 5 (including one spare piece) • Instruction sheet : 1 • Compliance sheet: 1
	19 mm	FHV-LEM-H19	

When purchasing the Smart Camera with integrated lens module, refer to *1-1-3 FHV7□-□□□□□□-H□□ Series* on page 1-3 and *1-1-5 FHV7□-□□□□□□-H□□-□□ Series* on page 1-4.

Standard Lens Modules

Appearance	Focal distance	Model	Package contents
	6 mm	FHV-LEM-S06	• Main unit: 1 • Special cover for FHV-LEM-S: 1 • Screws: M3×8 mm: 5 (including one spare piece) • Instruction sheet : 1 • Compliance sheet: 1
	9 mm	FHV-LEM-S09	
	12 mm	FHV-LEM-S12	
	16 mm	FHV-LEM-S16	
	25 mm	FHV-LEM-S25	

When purchasing the Smart Camera with integrated lens module, refer to *1-1-2 FHV7□-□□□□□□-S□□ Series* on page 1-2 and *1-1-4 FHV7□-□□□□□□-S□□-□□ Series* on page 1-3.

Lighting Modules

Appearance	Color	Peak wavelength	Source	Model	Package contents
	White	-	LED	FHV-LTM-W	• Main unit: 1 • Waterproof packing (small) FHV-XWP-CAM:1 • Waterproof packing (large) FHV-XWP-LTM: 1 • Light shielding sheet FHV-XLS-LTM: 1 • Lighting cover FHV-XCV: 1 • Hexagonal wrench (length: 60 mm): 1 • Instruction sheet: 1 • Compliance sheet: 1
	Red	Typ. 630 nm	LED	FHV-LTM-R	
	Infrared light	Typ. 850 nm	LED	FHV-LTM-IR	
	Multi-color	R: Typ. 630 nm G: Typ. 525 nm B: Typ. 465 nm IR:Typ. 850 nm	LED	FHV-LTM-MC	

If purchasing the Smart Camera with integrated lighting module, refer to the *1-1-4 FHV7□-□□□□□□-S□□-□□ Series* on page 1-3 and the *1-1-5 FHV7□-□□□□□□-H□□-□□ Series* on page 1-4.

1-2-4 Accessories

Optical Filters

Appearance	Type	Supported wavelength	Model
	Polarization filter	Visible	FHV-XPL
	Polarization filter	Visible to infrared	FHV-XPL-IR
	Diffusion filter		FHV-XDF
	Lighting cover		FHV-XCV

Waterproof Hoods

Appearance	Description	Model	Package contents
	For C mount lens 3Z4S-LE SV-V series	FHV-XHD-S	• Hood cover: 1 • Hood base: 1 • Waterproof packing, FHV-XWP-CAM: 1 • Screws, M3×8 mm: 5
	For C mount lens 3Z4S-LE SV-H series	FHV-XHD-L	
	For lens module	FHV-XHD-LEM	• Hood cover: 1 • Hood base: 1 • Waterproof packing FHV-XWP-CAM: 2 • Hexagonal wrench: (length: 60 mm): 1

Mounting Fixtures

Appearance	Description	Model	Package contents
	For Smart Camera body and lighting controller mounting	FHV-XMT-7	None
	For lighting controller mounting	FHV-XMT-7-TCC	Screws: M5×8 mm: 5

Waterproof Packings

Appearance	Description	Model
	For camera: 5[*1]	FHV-XWP-CAM

Appearance	Description	Model
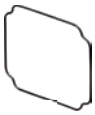	For internal lighting: 5*1	FHV-XWP-LTM
	For hood: 5*1	FHV-XWP-HD-SL

*1. After this was used once, replace this with the new one when mounting and dismounting lens or lighting module.

Waterproof Caps

Appearance	Description	Model
	For lighting connector	FHV-XWC-LCN
	For Ethernet connector	FHV-XWC-ECN

Light-shielding Sheet

Appearance	Description	Model
	For lighting module: 3*1	FHV-XLS-LTM

*1. After this was used once, replace this with the new one when mounting and dismounting lens or lighting module.

Special Cover

Appearance	Description	Model	Package contents
	Cover for C mount	FHV-XFC-C	Screws: M3×8 mm: 5 (including one spare piece)
	Cover for lens modules	FHV-XFC-LEM-S	Screws: M3×8 mm: 5 (including one spare piece)

Appearance	Description	Model	Package contents
	Cover for High-speed lens modules	FHV-XFC-LEM-H	Screws: M3×8 mm: 5 (including one spare piece)

Replacement Screws for Micro SD Card Cover

Appearance	Description	Model
	Replacement Screws for Micro SD Card Cover	FHV-XSCR-MSD

1-2-5 Lighting and Lighting Controller

Appearance	Description			Model
---	External lighting		---	FLV series
			---	FL series
	Lighting Controller (Required to control external lighting form a Smart Camera)	For FLV series	Camera mount lighting controller	FLV-TCC series
			Analog lighting controller	FLV-ATC series
		For FL series	Camera mount lighting controller	FL-TCC series
			Digital lighting controller	FL-STC series

For the setting method of lighting controllers, refer to those instruction sheets respectively.

1-2-6 Touch Panel Monitor

Omron Model

Appearance	Description	Model
	Touch Panel Monitor for FHV7 Smart Camera series 15.4 inch, Black	NYE2A-20F11-15WR1200
	Touch Panel Monitor for FHV7 Smart Camera series 12.1 inch, Black	NYE2A-20F11-12WR1200
	High-Pressure Waterproof Attachment (PWA) 15.4 inch	NA-15WATW01
	High-Pressure Waterproof Attachment (PWA) 12.1 inch	NA-12WATW01
	Anti-reflection Sheets 15.4 inch	NA-15WKBA04
	Anti-reflection Sheets 12.1 inch	NA-12WKBA04

Advantech Model

Appearance	Description	Model
	Touch Panel Monitor	PPC-310-OMR
	ARM VESA Standard (A-CLEVER) for PPC Series	PPC-ARM-A03
	Wall mount kit for PPC Series	PPC-174T-WL-MTE
	Stand for PPC Series	PPC-Stand-A1E
	ADP A/D 100-240V 90W 19V W/PFC	96PSA-A90W19OT-3
	Power cord 3P UL 10 A 125 V 1.8 m	1700001524
	Power cord 3P Europe (WS-010+083) 1.83 m	170203183C
	Power cord 3P/3P PSE 1.8 m	1700008921-11
	Power cord 3P CCC (China) 1.8 m	96CB-POWER-B-1.8M

For information about touch panel monitors, refer to the respective instruction manuals.

1-2-7 Software

Remote Operation Tool

Appearance	Description	Model
---	Remote operation tool	---

The Remote Operation tool are possible to download with free by doing the member registration after purchasing the Smart Camera. For details, refer to the membership registration sheet packed with the Smart Camera.

Automation Software Sysmac Studio

The Sysmac Studio is the software that provides an integrated environment for setting, programming, debugging and maintenance of machine automation controllers including the NJ/NX-series CPU Units, NY-series Industrial PC, EtherCAT Slave, and the HMI.
For details, refer to your local OMRON website and *Sysmac Studio Catalog* (Cat. No. P138).

2

Overview of FHV Series

2-1 Overview of System 2-2
2-1-1 Basic System of Measurement 2-2
2-2 Flow of Use Procedure 2-9

2-1 Overview of System

2-1-1 Basic System of Measurement

FHV series use pre-built packages that contain all the processing tasks (for image input, measurement processing, displays, outputs, etc.) that are required for vision inspections.
Users arrange these packaged processes to make measurement flows with in order of execution of the vision inspection.
An FHV executes vision inspections according to user-created flows.

Additional Information

In the FHV settings, a flow containing packaged processes that are arranged in order of execution of processing items and image processing is called a measurement flow.
Processing items and measurement flows can have more than one setting. You can switch the setting based on the scene to inspect.
For details, refer to the *Vision System FH/FHV series User's Manual (Cat. No. Z365)*.

Concept of Measurement Processing

When the FHV receives a measurement trigger from the PLC or other external device, the image input from a Camera, measurement processing, and output of measurement results (e.g., OK/NG judgement results) are executed in the order that those processing items are registered in the measurement flow.

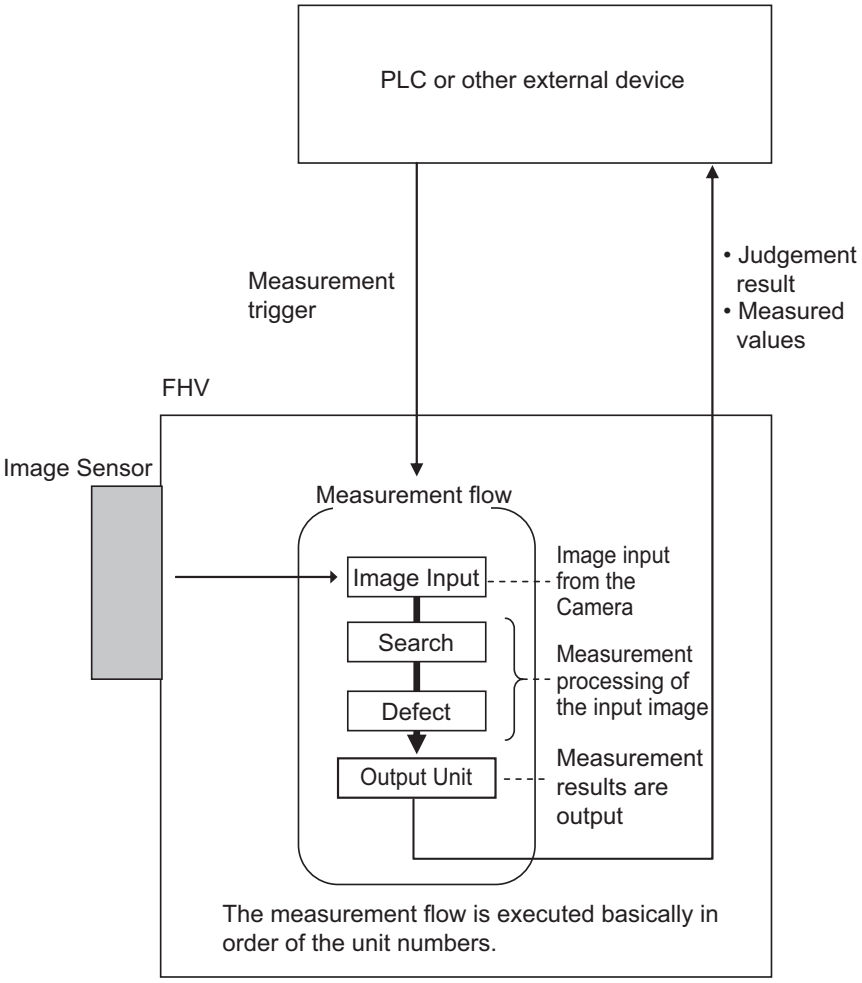

In the measurement flow, you can change the processing to execute based on the inspection results or input conditions of the vision inspection.

FHV Series

An example of the system configuration is as follows.

- **When not using the Smart Camera Data Unit**

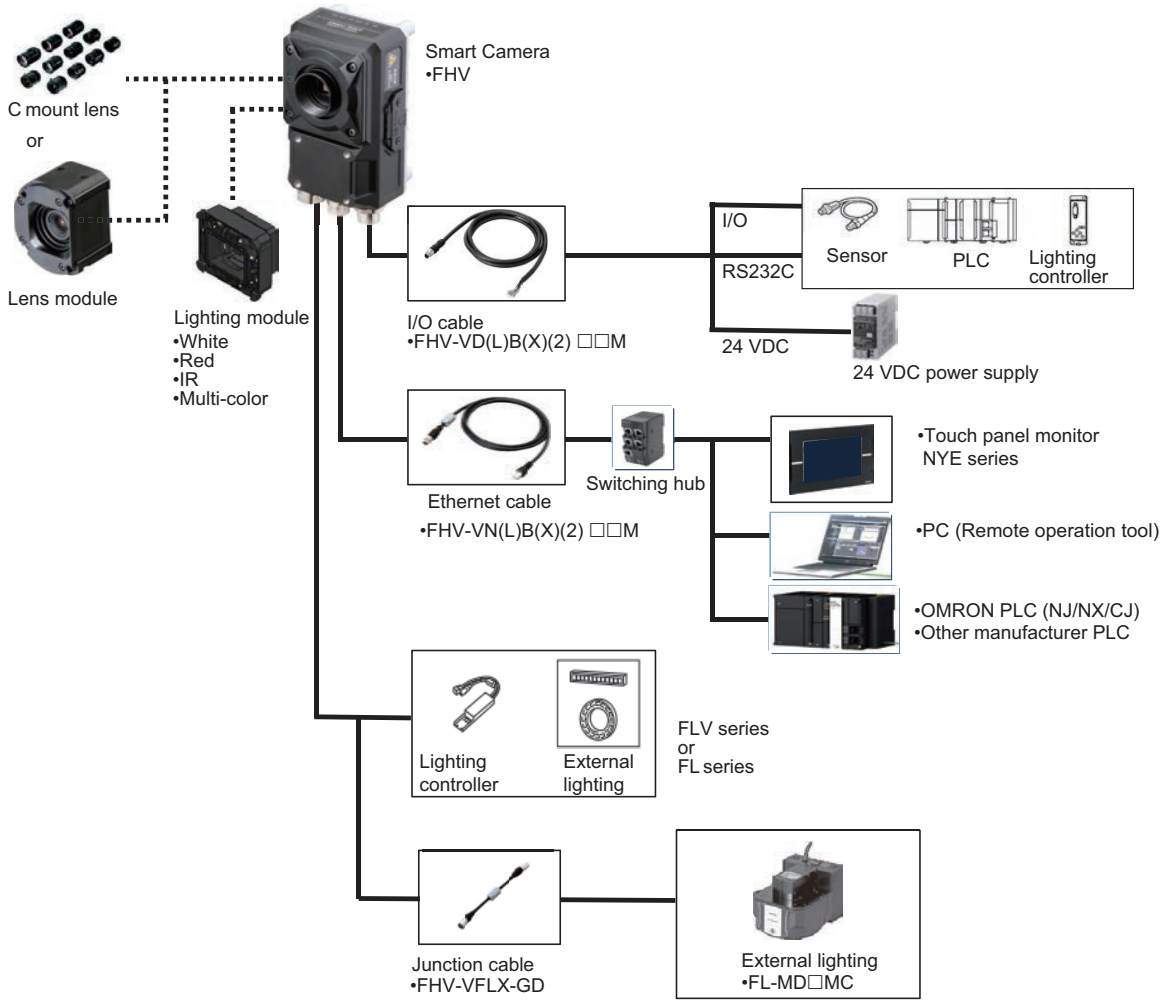

- **When using the Data Unit for the Smart Camera (Parallel Interface)**

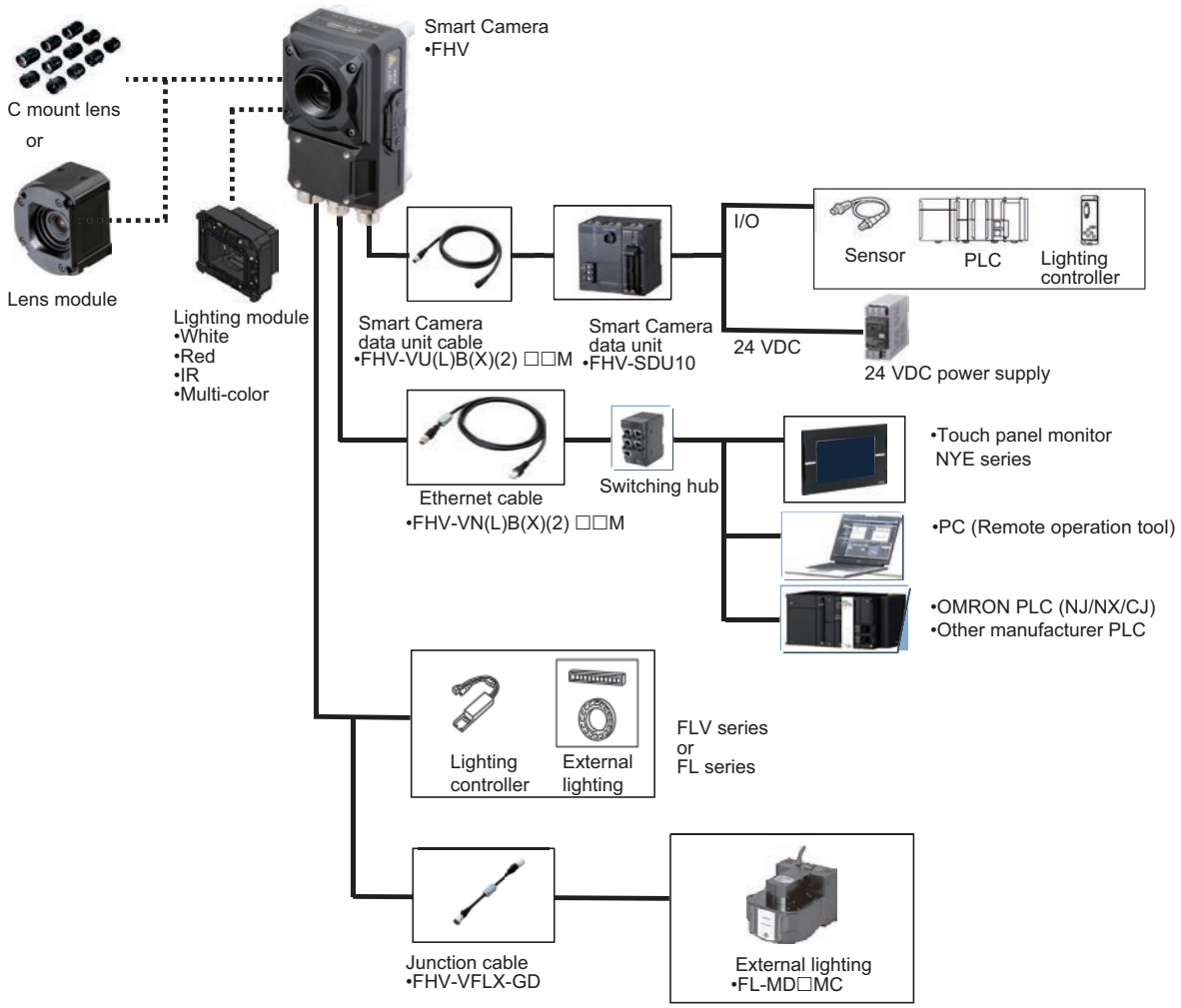

- **When using the Data Unit for the Smart Camera (EtherCAT Interface)**

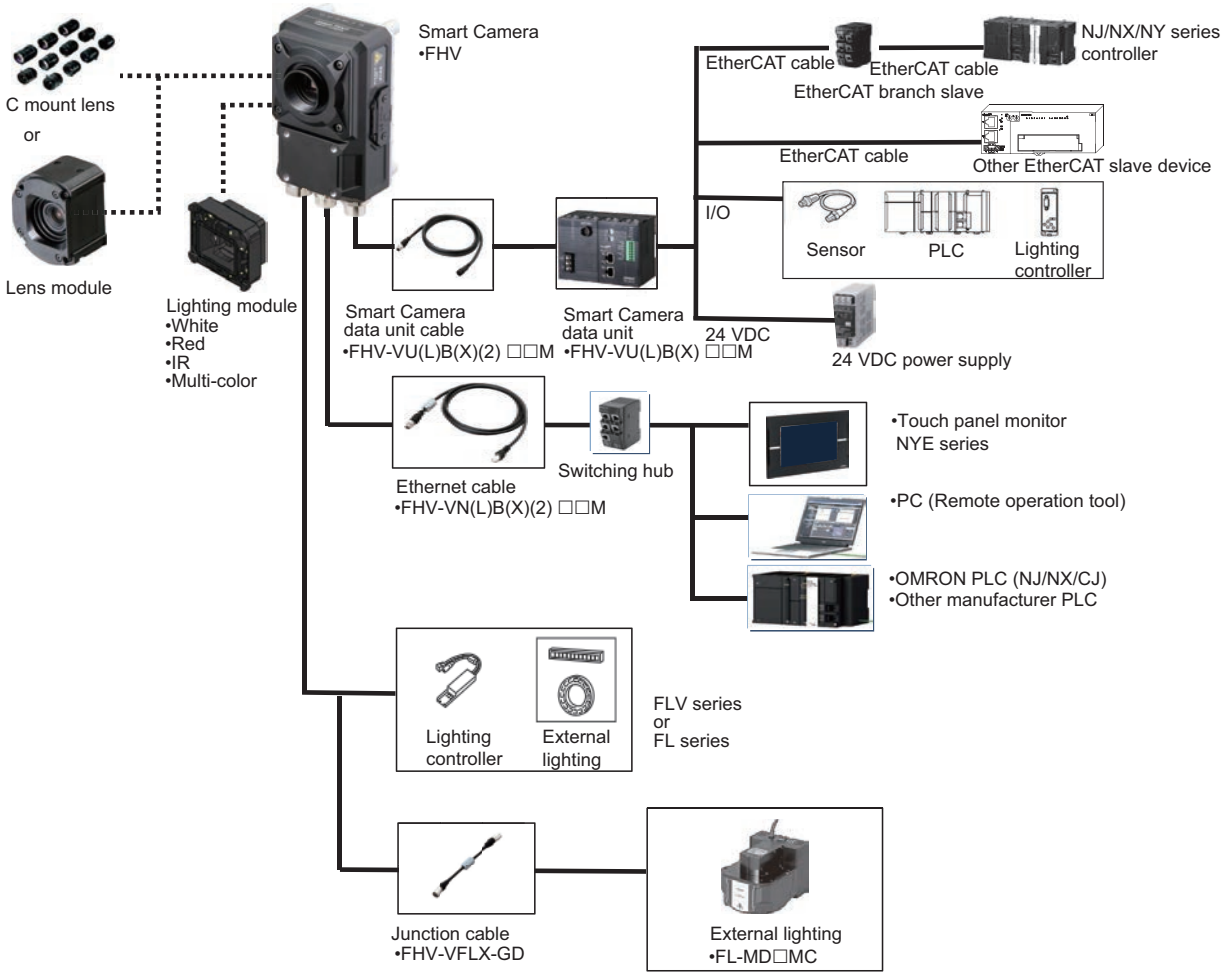

Smart Camera Models and System Configuration

● Model Reference

FHV7□-□□□□□□-□□□-□□

1 2 3 4 5 6 7

Model Reference	Meaning	Description
1	Controller specifications	• H: 32 bit OS Model • X: 64 bit OS Model (1st generation) • Y: 64 bit OS Model (2nd generation)
2	Imaging element	• M: Monochrome • C: Color
3	Resolution	• 004: 0.4 [Mpix] • 016: 1.6 [Mpix] • 032: 3.2 [Mpix] • 050: 5.0 [Mpix] • 063: 6.3 [Mpix] • 120: 12.0 [Mpix]
4	Shutter system	• None: Global shutter • R: Rolling shutter
5	Lens type	• C: C mount lens • S: Standard lens module • H: High-speed lens module
6	Focal length	• 06: 6 [mm] • 09: 9 [mm] • 12: 12 [mm] • 16: 16 [mm] • 19: 19 [mm] • 25: 25 [mm]
7	Lighting color	• W: White • R: Red • IR: Infrared light • MC: Multi color

System Configurations

For the Smart Camera FHV7 series, there are five configurations below by module combinations.

Smart Camera		Lens	Internal lighting	Protective structure	Integrated model	Appear-ance	Configura-tion
0.4 Mpix 1.6 Mpix 3.2 Mpix 5.0 Mpix 6.3 Mpix 12.0 Mpix	FHV7□-□004-□ FHV7□-□016-□ FHV7□-□032-□ FHV7□-□050-□ FHV7□-□063R-□ FHV7□-□120R-□	C mount lens 3Z4S-LE SV-□□□□□V 3Z4S-LE SV-□□□□□H	N/A	IP40	FHV7□-□□□□□-C		C mount lens/IP40
				IP67 FHV-XHD-S FHV-XHD-L	N/A	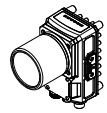 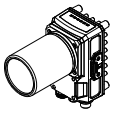	C mount lens/IP67
0.4 Mpix 1.6 Mpix 3.2 Mpix 6.3 Mpix	FHV7□-□004-□ FHV7□-□016-□ FHV7□-□032-□ FHV7□-063R-□	FHV lens module FHV-LEM-□□□	N/A	IP40	FHV7□-□□□□□-S□□	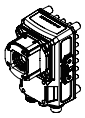	Lens module/IP40
					FHV7□-□□□□□-H□□	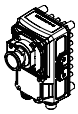	
				IP67 FHV-XHD-LEM	N/A		Lens module/IP67
			FHV-LTM-□□	IP67	FHV7□-□□□□□-S□□-□□ FHV7□-□□□□□-H□□-	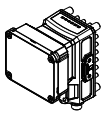	Lens mod-ule /Internal lighing - IP67

2-2 Flow of Use Procedure

The following table shows the flow for using the FHV.

Procedure	Description	Reference
Preparations	Installation and Wiring	*Section 4 Handling and Installation Environment* on page 4-1 *Section 5 Installation* on page 5-1
	↓	
	Turning ON Power	*6-1 When Turning Power ON and OFF* on page 6-2
	↓	
	Connecting the Remote Operation Tool	*7-2 Operating the Smart Camera Remotely [Remote Operation Tool]* on page 7-10
	↓	
	Language Selection in dialog box (only when the sensor controller is started for the first time)	*Vision System FH/FHV series User's Manual* (Cat. No. Z365)
	↓	
	Security Settings in the dialog box (only when the sensor controller is started for the first time)	*Vision System FH/FHV series User's Manual*
	↓	
	Main Window (Layout 0) Display	*Vision System FH/FHV series User's Manual*
	↓	
	Camera Adjustments (Display the settings dialog box for a Camera Image Input processing item.)	*Vision System FH/FHV series User's Manual*
	↓	
	Select **Tool − System settings**, and then under **Startup setting**, set the settings for *Basic*, *Communication*, and *Operation mode*.	*Vision System FH/FHV series User's Manual*
	↓	
	Click **Data save**, and then select **Function - System restart**.	*Vision System FH/FHV series User's Manual*
	↓	
	Select **Tool - System settings** , and then set *Camera*, *Communication* and *Other*.	*Vision System FH/FHV series User's Manual*
	↓	
	Click **Data save**.	*Vision System FH/FHV series User's Manual*
↓		

Procedure	Description	Reference
Scene Editing	In the Main Window (layout 0), edit the measurement flow. • Register processing items. • Set the properties for each processing item.	*Vision System FH/FHV series User's Manual*
	↓	
	Click **Data save**.	*Vision System FH/FHV series User's Manual*
↓↑		
Testing	Execute test measurements. (In the Main Window (layout 0), click **Measure**.)	*Vision System FH/FHV series User's Manual*
	↓	
	Adjust the parameters for each processing item.	*Vision System FH/FHV series User's Manual*
	↓	
	Click **Data save**.	*Vision System FH/FHV series User's Manual*
↓		
Measuring (Operation)	In the Main Window (layout 0), click **Switch layout**, and then select *Main Window (Layout 1)*.	*Vision System FH/FHV series User's Manual*
	↓	
	In the Main Window (layout 1), check the communications with the PLC.	*Vision System FH/FHV series User's Manual*
	↓	
	In the Main Window (layout 1), execute commands from the PLC, such as measurement trigger commands.	*Vision System FH/FHV series User's Manual*
↓		
Management and Analysis	Save and analyze measurement data and images.	*Vision System FH/FHV series User's Manual*

3

Configuration

3-1 Smart Camera 3-3
3-1-1 FHV Series 3-3

3-2 Smart Camera Data Unit 3-13
3-2-1 Specifications 3-13
3-2-2 Component Names and Functions 3-14
3-2-3 Dimensions 3-15

3-3 Cables 3-17
3-3-1 I/O Cables 3-17
3-3-2 Ethernet Cables 3-26
3-3-3 Smart Camera Data Unit Cables 3-34
3-3-4 Junction cable for external lighting 3-42

3-4 Lens Modules 3-43
3-4-1 Specifications 3-43
3-4-2 Dimensions 3-44
3-4-3 Optical Chart 3-46

3-5 C Mount Lenses 3-51
3-5-1 Specifications 3-51
3-5-2 Meaning of Optical Chart 3-61

3-6 Lighting Modules 3-68
3-6-1 Specifications 3-68
3-6-2 Dimensions 3-69

3-7 Optical Filters 3-70
3-7-1 Specifications 3-70
3-7-2 Dimensions 3-71

3-8 Waterproof Hoods 3-72
3-8-1 Specifications 3-72
3-8-2 Dimensions 3-73

3-9 Mounting Fixtures 3-77
3-9-1 Specifications 3-77
3-9-2 Dimensions 3-78

3-10 Waterproof Packings 3-79
3-10-1 Specifications 3-79
3-10-2 Dimensions 3-79

3-11 Waterproof Caps 3-81
3-11-1 Specifications 3-81
3-11-2 Dimensions 3-81

3-12 Lightproof Sheet 3-83
3-12-1 Specifications 3-83
3-12-2 Dimensions 3-83
3-13 Special Covers 3-84
3-13-1 Specifications 3-84
3-13-2 Dimensions 3-84
3-14 Replacement Screws for MicroSD Card Cover 3-86
3-14-1 Specifications 3-86
3-14-2 Dimensions 3-86
3-15 Software 3-87
3-15-1 Remote Operation Tool 3-87
3-15-2 Simulation Software 3-87
3-15-3 Sysmac Studio 3-87

3-1 Smart Camera

3-1-1 FHV Series

Specifications

Item			FHV7H- / FHV7X- / FHV7Y-											
			M004	C004	M016	C016	M032	C032	M050	C050	M063R	C063R	M120R	C120R
Specifications	Operation Mode	Standard	Yes											
		Double speed multi-in-put	Yes											
		Non-stop adjust-ment mode	Yes											
	Parallel processing		Yes											
	Possible No. of captured images		256		64		36		25		19		10	
	Possible No. of logging images to Smart Cam-era		• For FHV7H : 214 • For FHV7X : 645		• For FHV7H : 52 • For FHV7X/ FHV7Y : 161		• For FHV7H : 25 • For FHV7X/ FHV7Y : 79		• For FHV7H : 15 • For FHV7X/ FHV7Y : 50		• For FHV7H : 12 • For FHV7X/ FHV7Y : 39		• For FHV7H : 5 • For FHV7X/ FHV7Y : 19	
	Possible No. of scenes		128*1											
	UI operation		Remote Operation Tool											
	Setup		Create the processing flow using Flow editing.											
	Language		Japanese, English, Simplified Chinese, Traditional Chinese, German, French, Italian, Span-ish, Korean, Vietnamese, Polish											

	Item	FHV7H- / FHV7X- / FHV7Y-											
		M004	C004	M016	C016	M032	C032	M050	C050	M063R	C063R	M120R	C120R
Imaging	CMOS Image elements	1/2.9-inch equivalent		1/2.9-inch equivalent		1/1.8-inch equivalent		2/3-inch equivalent		1/1.8-inch equivalent		1/1.7-inch equivalent	
	Color/Mono-chrome	Mon-ochro me	Color	Mon-ochro me	Color	Mon-ochro me	Color	Mon-ochro me	Color	Mon-ochro me	Color	Mon-ochro me	Color
	Effective pixels (HxV)	720 × 540		1440 × 1080		2048 × 1536		2448 × 2048		3072 × 2048		4000 × 3000	
	Pixel size	6.9×6.9 μm		3.45×3.45 μm		3.45×3.45 μm		3.45×3.45 μm		2.4×2.4 μm		1.85×1.85 μm	
	Imaging area H×V (opposing corner)	5.0×3.8 (6.3 mm)		5.0×3.8 (6.3 mm)		7.1×5.3 (8.9 mm)		8.5×7.1 (11.1 mm)		7.4×5.0 (8.9 mm)		7.4×5.6 (9.3 mm)	
	Shutter system	Global Shutter								Rolling shutter (Global reset mode compatible)			
	Shutter function	Electronic shutter: Shutter speed can be set from 1 μs to 100 ms.								Electronic shutter: Shut-ter speed can be set from 55 μs to 100 ms.		Electronic shutter: Shut-ter speed can be set from 84 μs to 100 ms.	
	Partial function	4 to 540 lines (4-line incre-ments)		4 to 1080 lines (4-line incre-ments)		4 to 1536 lines (4-line incre-ments)		4 to 2048 lines (4-line incre-ments)		4 to 2048 lines (4-line incre-ments)		4 to 3000 lines (4-line incre-ments)	
	Frame rate (image acquisition time)	430 fps (2.3 ms)		224 fps (4.5 ms)		55 fps (18.0 ms)		35 fps (28.0 ms)		59 fps (16.7 ms)		19 fps (25.0 ms)	
	Lens mounting	C mount											
	Field of view, Installation distance	Selecting a lens according to the field of view and installation distance											

Item		FHV7H- / FHV7X- / FHV7Y-											
		M004	C004	M016	C016	M032	C032	M050	C050	M063R	C063R	M120R	C120R
External Interface	Serial	RS-232C×1											
	Ethernet	Protocol: Non-procedure (TCP/UDP) I/F: 1000BASE-T×1											
	EtherNet/IP	Yes (Target/Ethernet port)											
	PROFINET	Yes (Slave/Ethernet port), Conformance class A											
	EtherCAT	Yes (Slave) (Smart Camera Data Unit FHV-SDU30 only supports.)											
	Parallel I/O	NPN/PNP common											
	Parallel I/F	High-speed input: 1, General input: 3, High-speed output: 1, General output: 4											
	Encoder I/F	Yes (Smart Camera Data Unit FHV-SDU10 only supports.)											
	Monitor I/F	N/A											
	USB I/F	N/A											
	SD Card I/F	microSD card: SDHC×1											
Indicator Lamps	Main	PWR: Green, RUN: Green, LINK: Yellow, BUSY: Green, OR: Yellow, ERR: Red											
	SD	SD ACCESS: Yellow											
Supply Voltage		21.6 VDC to 26.4 VDC (When an I/O cable with 20 m is connected, it is 24.0 VDC to 26.4 VDC.)											
Current Consumption		• With lighting modules: 4.2 A or less • Without lighting modules: • With lighting or lighting controllers: 2.1 A or less • With lighting or lighting controllers: 0.6 A or less											
Built-in FAN		N/A											
Usage Environment	Ambient temperature range	Operating: 0 to +40°C, Storage: -25 to +65°C (with no icing or condensation)											
	Ambient humidity range	Operating & Storage: 35 to 85% (with no condensation)											
	Ambient atmosphere	No corrosive gases											
	Vibration tolerance	Oscillation frequency: 10 to 150Hz, Half amplitude: 0.35 mm, Vibration direction: X/Y/Z, Sweep time: 8 minute/count, Sweep count: 10 With standard lens modules, FHV-LEM-S: Half amplitude: 0.15 mm (Others are the same as above.)											
	Shock resistance	Impact force: 150 m/s^2, Test direction: 6 directions, three times each (up/down, front/behind, left/right)											
	Noise immunity	Fast transient burst • DC power Direct infusion: 2kV, Pulse rising: 5 ns, Pulse width: 50 ns, Burst continuation time: 15 ms/ 0.75 ms, Period: 300 ms, Application time: 1 min. • I/O line											
		Coupling clamp: 1kV, Pulse rising: 5 ns, Pulse width: 50 ns, Burst continuation time: 15 ms/ 0.75 ms, Period: 300 ms, Application time: 1 min.											
	Grounding	Class D grounding (100 Ω or less grounding resistance) * Existing the third class grounding											

Item		FHV7H- / FHV7X- / FHV7Y-											
		M004	C004	M016	C016	M032	C032	M050	C050	M063R	C063R	M120R	C120R
External shape	Dimensions	110 mm × 68.5 mm × 55.5 mm (HxWxD)											
	Weight	Approx. 670 g											
	Degree of protection	With lighting modules or waterproof hoods: IEC60529 - IP67 (except a connector cap removed) Other than the above: IEC60529 - IP40											
	Case material	Aluminum die-casting (ADC12)											
Accessories		• Connector cap for Ethernet cable (mounted on the body): 1 • Connector cap for an external lighting (mounted on the body): 1 • C mount cap (mounted on the body): 1 • C mount cover (mounted on the body): 1 • Instruction sheet: 1 • Membership registration: 1 • General Compliance Information and Instructions for EU: 1											

*1. The number of scenes can be increased up to 1,024 with the Conversion scene group data tool.

● Available List of Smart Camera and Software Versions

Below is a list of correspondence between each smart camera and the software version of the FHV smart camera.
Some smart cameras cannot be used depending on the software version.

Model	Software version that can be used with FHV smart camera
FHV7H series	Ver.6.30 to Ver.6.55
FHV7X series	Ver.6.51 to Ver.6.80
FHV7Y series	Ver.6.80 or later

Component Names and Functions

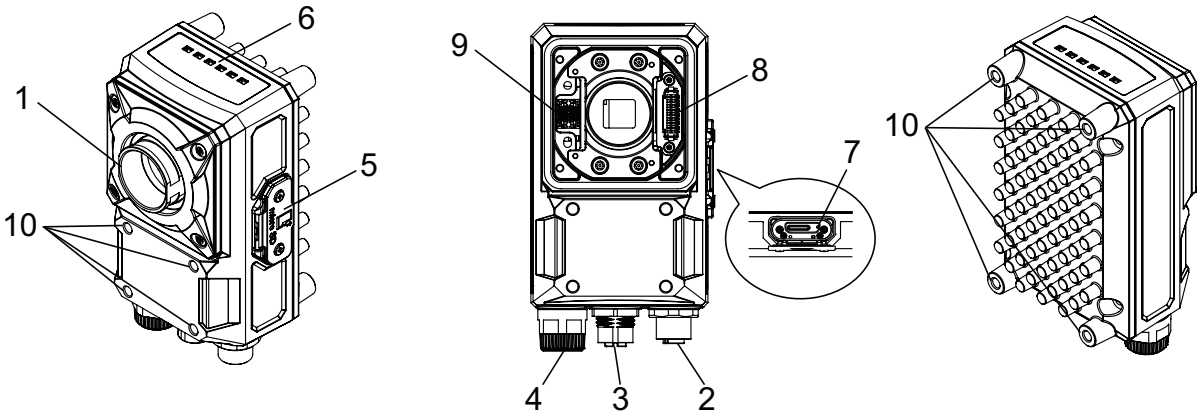

No.	Name		Description
1	Imaging unit		Captures images.
2	Connector for I/O cable or smart camera data unit cable		Use this connector when connecting the smart camera with a power supply or an external device using an I/O cable. Moreover, use this when connecting the smart camera with its data unit using its data unit cable. Dedicated I/O cable: FHV-VD□ Dedicated smart camera data unit cable: FHV-VU□
3	Connector for Ethernet cable		Use this connector when connecting the smart camera with a personal computer and so on using an Ethernet cable. Dedicated Ethernet cable: FHV-VN□
4	Connector for external lighting		Use this connector when connecting an external lighting and the external lighting controller. Connectable external lighting controller: FL-TCC□ and FLV-TCC□ Connectable external lighting: FL-MD□MC
5	Connector to attach microSD card		Use this connector to attach a microSD card. Do not extract/insert the microSD card during processing. Otherwise, measurement time may be influenced or data may be broken.
6	Operation indicator	PWR (Green)	Lights while power is supplied.
		RUN (Green)	Lights when switching to the layout in which the RUN signal output is set ON.
		LINK (Yellow)	Lights when connected with Ethernet equipment and blinks during communication.
		BUSY (Green)	Lights while processing is in progress.
		OR (Yellow)	Lights when the overall judgment output signal is ON.
		ERR (Red)	Lights when an error occurs.
7		SD ACCESS (Yellow)	Lights when accessing to the microSD card.
8	Connector for lighting module (white)		Use this connector when mounting the lighting module.
9	Connector for lens module (Black)		Use this connector when mounting the lens module.
10	Mounting screw holes		Use them to screw up the smart camera. Recommended tightening torque : 2.3N·m

Dimensions

- FHV7□-□□□□□-C

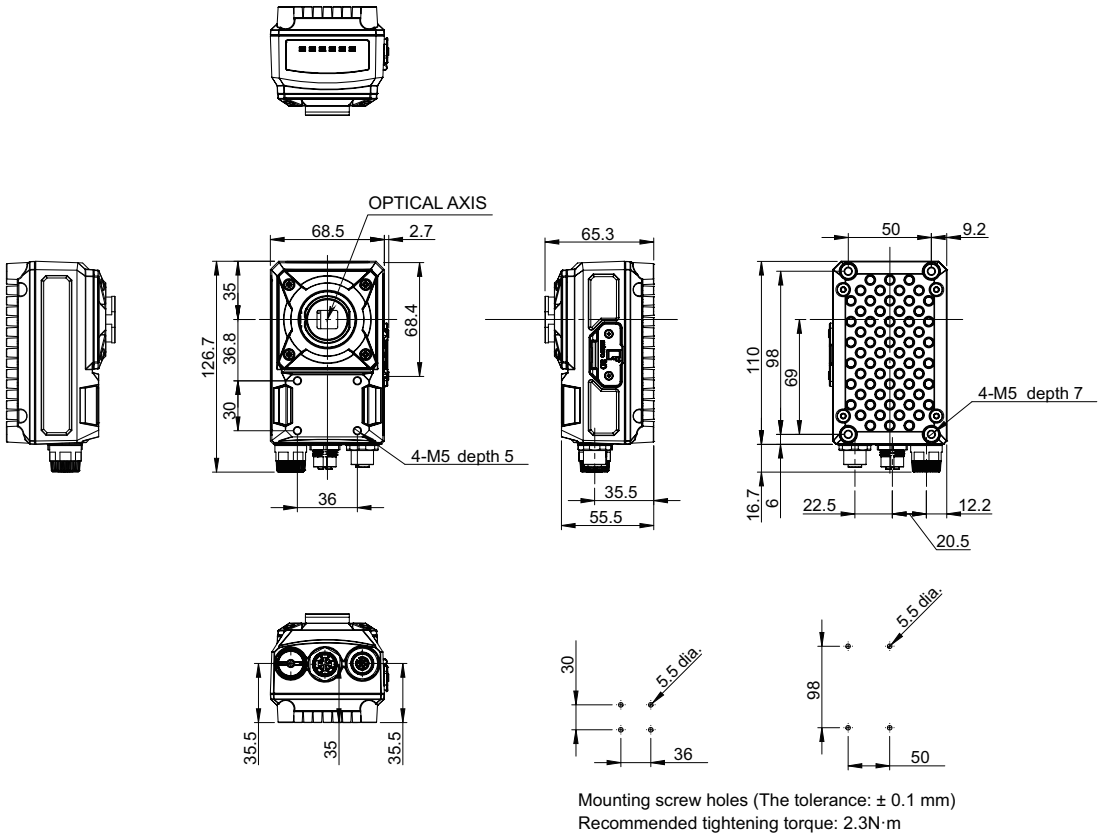

Mounting screw holes (The tolerance: ± 0.1 mm)
Recommended tightening torque: 2.3N·m

(Unit: mm)

- FHV7□-□□□□□-S□□

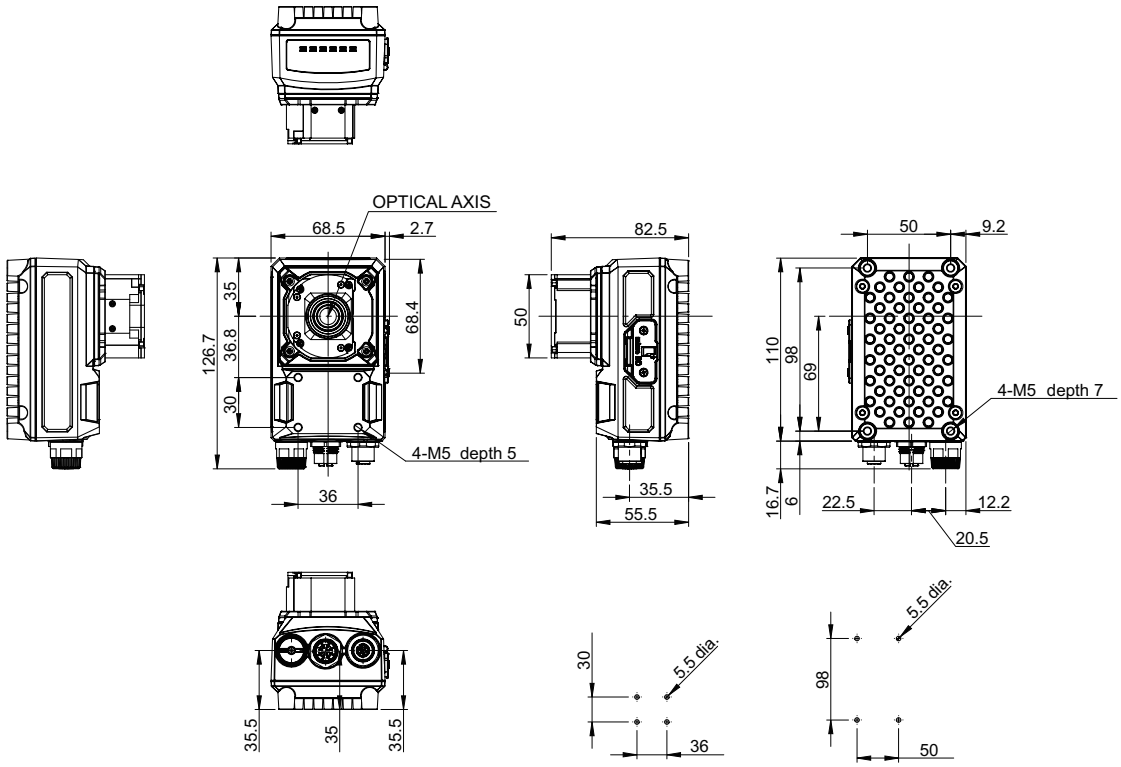

Mounting screw holes (The tolerance: ± 0.1 mm)
Recommended tightening torque: 2.3N·m

(Unit: mm)

- FHV7□-□□□□□-H06

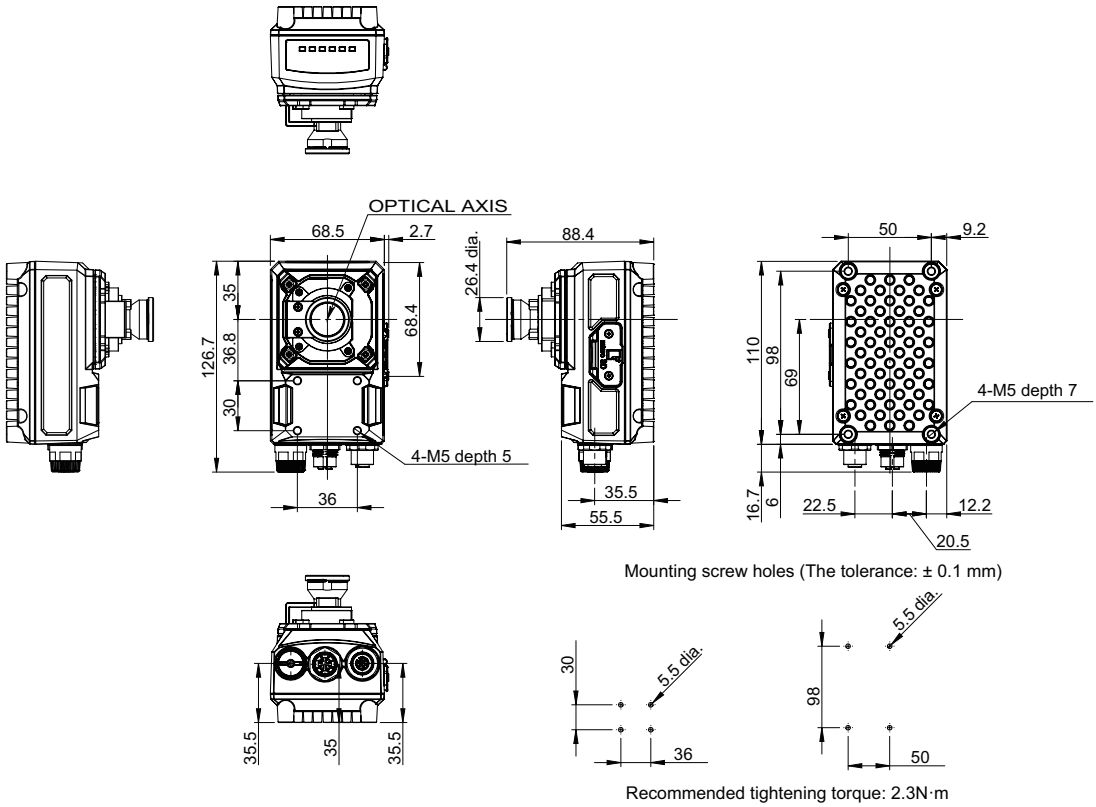

(Unit: mm)

- FHV7□-□□□□□-H19

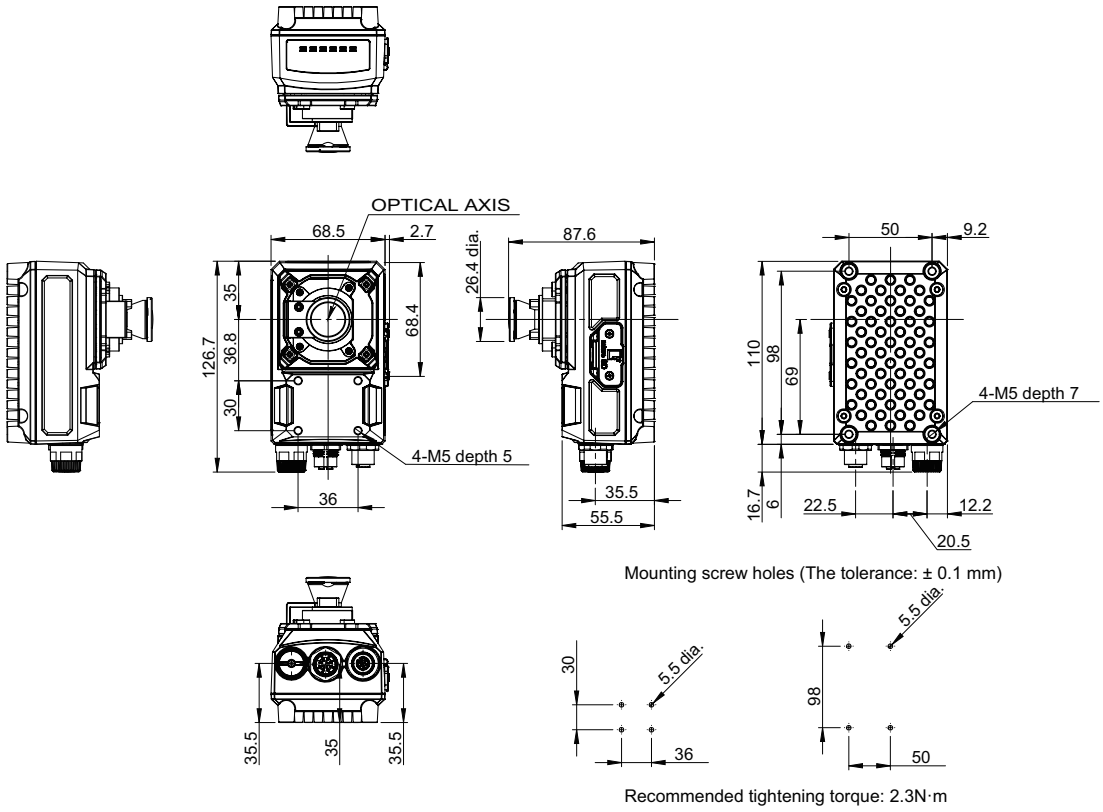

(Unit: mm)

- FHV7□-□□□□□□-S□□-□□, FHV7□-□□□□□□-H□□-□□

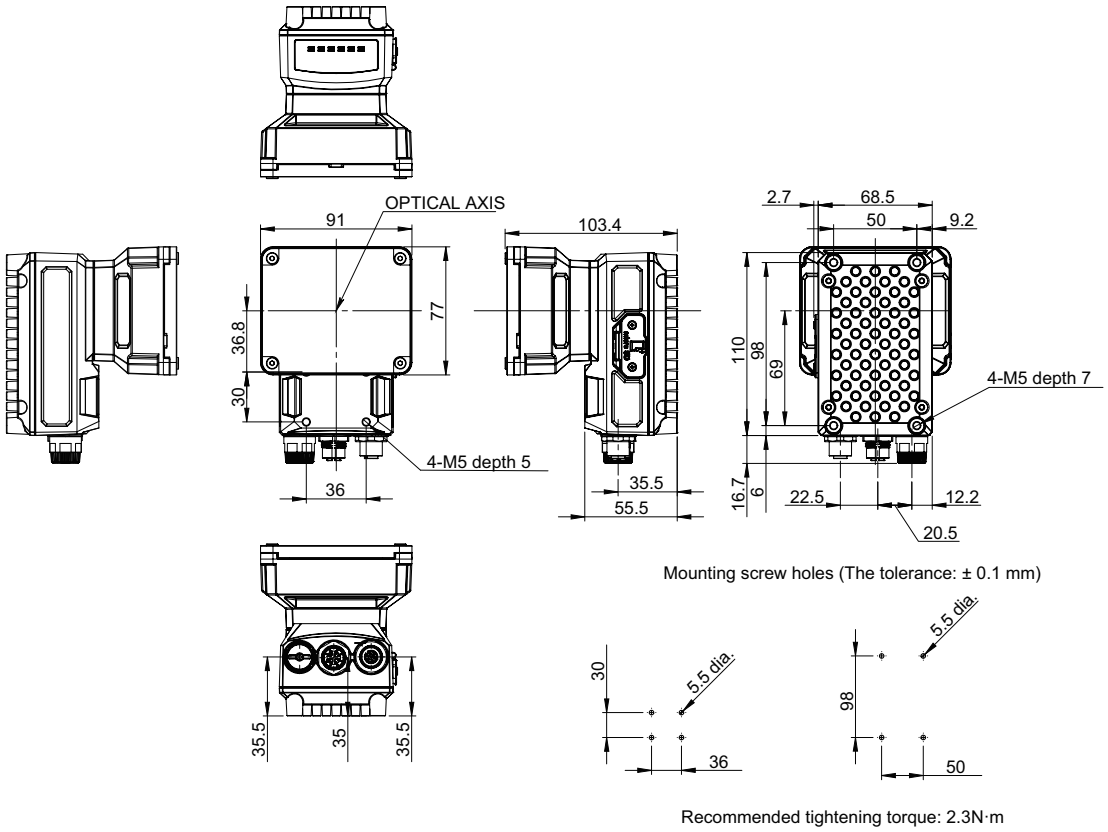

(Unit: mm)

Additional Information

We have the 2D CAD data or 3D CAD data.
You can download CAD data from www.fa.omron.co.jp.

3-2 Smart Camera Data Unit

3-2-1 Specifications

Item		Parallel interface	EtherCAT interface
Model		FHV-SDU10	FHV-SDU30
Input/output specifications	Parallel I/O	Input: 12 Output: 24 (NPN/PNP combined use)	Input: 1 Output: 2 (NPN/PNP combined use)
	Encoder I/F	Yes (Included in Parallel Input)	None
	EtherCAT communications	None	Yes (slave)
Smart Camera Interface		Special cable to connect No. of connectable cameras: 1	
Indicator	Main	POWER: Green, ERROR: Red, RUN: Green, BUSY: Green, CAMERA: Yellow, OR: Yellow	
	EtherCAT	None	ECAT RUN: Green, LINK/ACT IN: Green, LINK/ACT OUT: Green, ECAT ERROR: Red
Power supply voltage		21.6 to 26.4 VDC (Note: 24.0 to 26.4 VDC when a data unit cable with 20 m is connected.)	
Insulation resistance		Between DC terminal block and FG terminal: 0.5 MΩ (250V Megger)	
Current consumption		4.5 A or less	
Usage environment	Ambient temperature range	Operating: 0 to +50°C, Storage: -25 to +65°C (with no icing or condensation)	
	Ambient humidity range	Operating and storage: 35 to 85% (with no condensation)	
	Ambient atmosphere	No corrosive gases	
	Vibration tolerance	Oscillation frequency: 10 to 150 Hz, Half amplitude: 0.1 mm, Vibration direction: X/Y/Z, Sweep time: 8 minutes, Sweep count: 10 times	
	Shock resistance	Impact force: 150 m/s^2, Test direction: 6 directions, Three times each (up/down, front/behind, left/right)	
	Noise immunity	Fast transient burst • DC power Direct infusion: 2 kV, Pulse rising: 5 ns, Pulse width: 50 ns, Burst continuation time: 15 ms / 0.75 ms, Period: 300 ms, Application time: 1 minute • I/O line Coupling clamp: 1 kV, Pulse rising: 5 ns, Pulse width: 50 ns, Burst continuation time: 15 ms / 0.75 ms, Period: 300 ms, Application time: 1 minute	
	Grounding	Class D grounding (100 Ω or less grounding resistance) * Existing the third class grounding	

Item		Parallel interface	EtherCAT interface
External shape	Dimensions	H (90 mm) × W (93 mm) × D (65 mm)	H (90 mm) × W (124 mm) × D (65 mm)
	Weight	Approx. 250 g	Approx. 325 g
	Degree of protection	IEC60529 - IP20	
	Material	Case: PC+ABS, PC	
Accessories		• Instruction sheet: 1 • Compliance sheet: 1	

3-2-2 Component Names and Functions

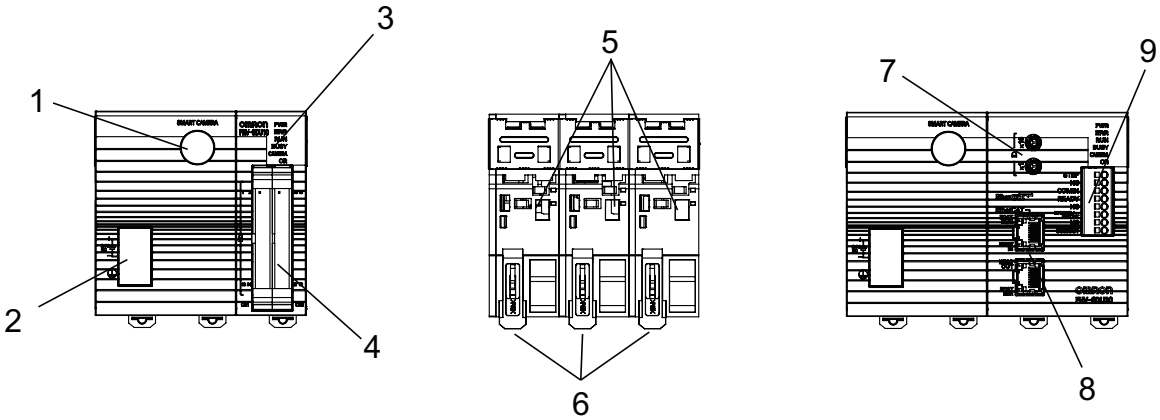

FHV-SDU10 Front FHV-SDU10 Back FHV-SDU30 Front

No.	Name		Description
1	Smart Camera connector		Connects the FHV series. (Special cable: FHV-VU□)
2	Power supply and grounding terminals		Connects 24 VDC power supply and grounding lines.
3	I/O indicator	POWER	Lights green while the power is supplied.
		ERROR	Lights Red when an error occurs.
		RUN	Lights green when the RUN signal output is switched to a layout set to ON.
		BUSY	Lights green while the Smart Camera is processing.
		CAMERA	Blinks yellow while the Smart Camera is preparing to connect. Lights yellow while the Smart Camera is connected.
		OR	Lights yellow when the overall judgment result is ON.
4	Parallel I/O connector		Connects external devices such as a synchronizing sensor or a programmable controller.
5	DIN rail mounting		Fits into the DIN rail on the body.
6	Slider		Uses this to fix the body to the DIN rail.
7	Address setting volume for EtherCAT		Uses to set an address (00 to 255) as an EtherCAT communication device.

No.	Name		Description
8	EtherCAT indicator	ECAT RUN	Lights green when EtherCAT communications are available.
		LINK/ACT IN	Lights green while an EtherCAT communication device is connected. Blink green during communications.
		LINK/ACT OUT	Lights green while an EtherCAT communication device is connected to the OUT connector. Blink green during communications.
		ECAT ERROR	Light red when an error occurs in EtherCAT communications.
	Connector for EtherCAT communications (IN)		Connects to an OUT connector of the EtherCAT master or other slave device.
	Connector for EtherCAT communications (OUT)		Connects to an IN connector of other slave device.
9	Parallel I/O connector		Connects an external device such as a synchronizing sensor or a programmable controller.

3-2-3 Dimensions

- FHV-SDU10

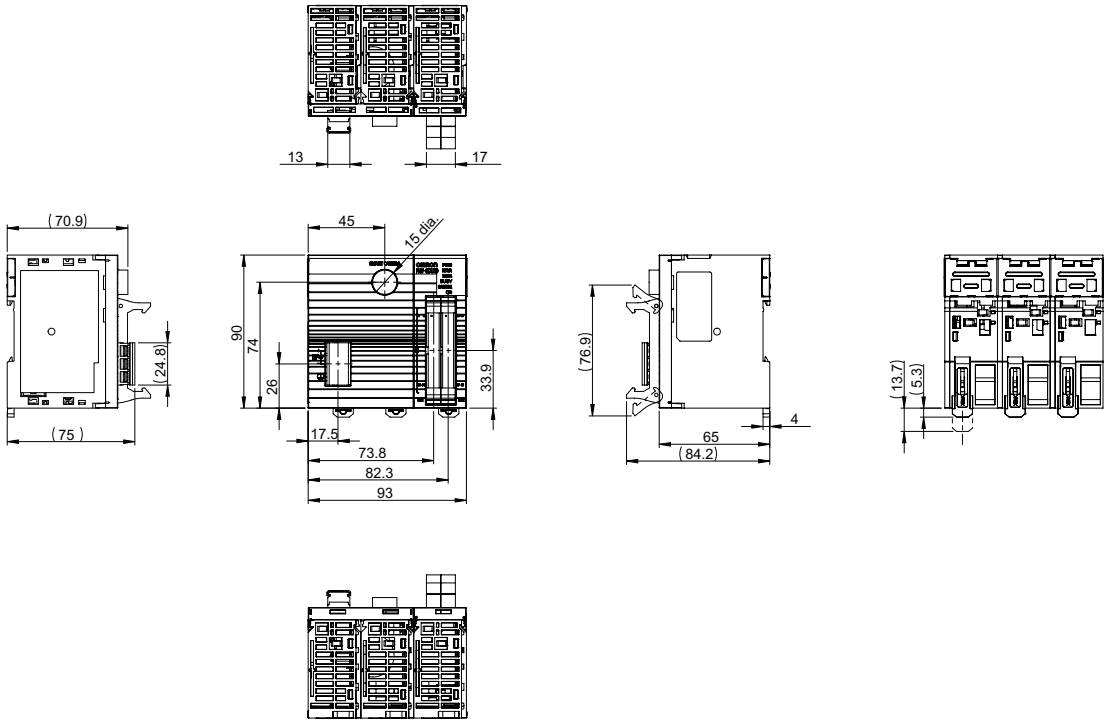

(Unit: mm)

- FHV-SDU30

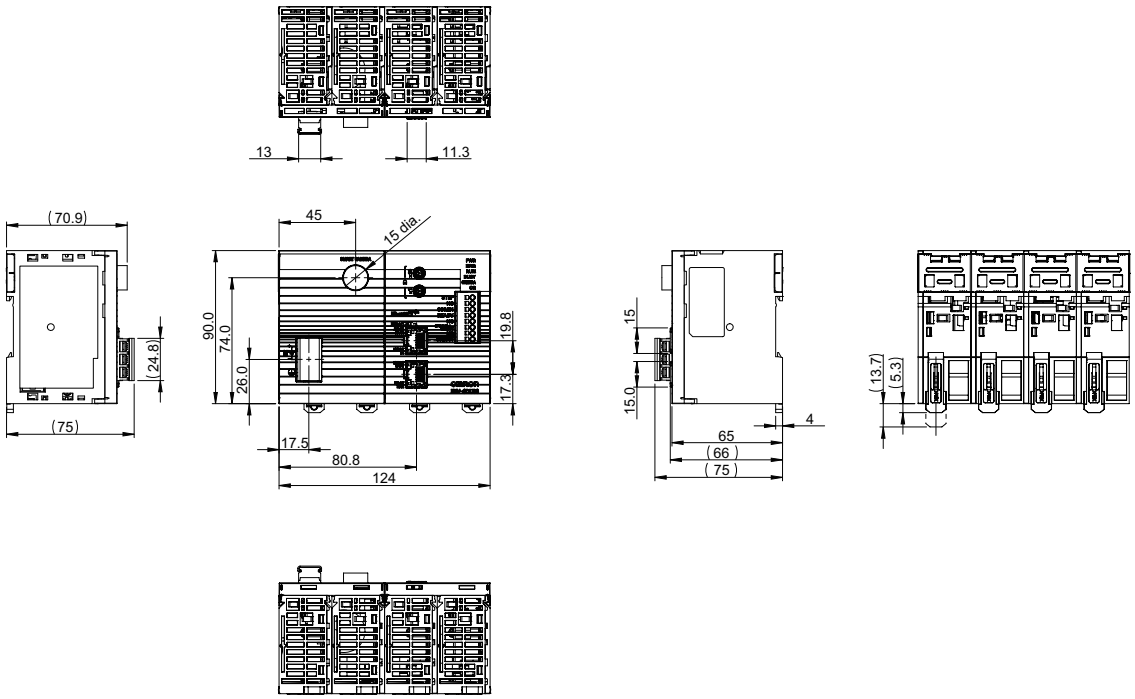

(Unit: mm)

Additional Information

We have the 2D CAD data or 3D CAD data.
You can download CAD data from www.fa.omron.co.jp.

3-3 Cables

3-3-1 I/O Cables

Specifications

- I/O cables (straight, bending resistance)

Item		FHV-VDB2 2M	FHV-VDB2 3M	FHV-VDB2 5M	FHV-VDB2 10M	FHV-VDB2 20M
Cable length		2 m	3 m	5 m	10 m	20 m
Cable type		Bending resistance cable				
Connector type		Straight connector				
Size	Power line	AWG21				
	Others	AWG26				
Outer diameter		8.8±0.3 mm dia.				
Min. bending radius		Fixed use: 40 mm, Sliding use: 70 mm				
Usage environment	Ambient temperature range	Operating: -10 to +70°C, Storage: -25 to +85°C (with no icing or condensation)				
	Ambient humidity range	Operating & Storage: 0 to 93% (with no condensation)				
	Ambient atmosphere	No corrosive gases				
	Vibration tolerance	Oscillation frequency: 10 to 150Hz, Half amplitude: 0.35 mm, Vibration direction: X/Y/Z, Sweep time: 8 minutes/count, Sweep count: 10 times				
	Shock resistance	Impact force: 150 m/s^2, Test direction: 6 directions, three time each (up/down, front/behind, left/right)				
Material		Mold part: Nylon, PVC, Sheath part: PVC				
Weight		Approx. 250 g	Approx. 370 g	Approx. 590 g	Approx. 1170 g	Approx. 2310 g

Item		FHV-VDB 2M	FHV-VDB 3M	FHV-VDB 5M	FHV-VDB 10M	FHV-VDB 20M
Cable length		2 m	3 m	5 m	10 m	20 m
Cable type		Bending resistance cable				
Connector type		Straight connector				
Size	Power line	AWG21				
	Others	AWG26				
Outer diameter		9.0±0.3 mm dia.				
Min. bending radius		Fixed use: 54 mm, Sliding use: 72 mm				

Item		FHV-VDB 2M	FHV-VDB 3M	FHV-VDB 5M	FHV-VDB 10M	FHV-VDB 20M
Usage environment	Ambient temperature range	Operating: -30 to +80°C, Storage: -30 to +100°C (with no icing or condensation)				
	Ambient humidity range	Operating & Storage: 0 to 93% (with no condensation)				
	Ambient atmosphere	No corrosive gases				
	Vibration tolerance	Oscillation frequency: 10 to 150Hz, Half amplitude: 0.35 mm, Vibration direction: X/Y/Z, Sweep time: 8 minutes/count, Sweep count: 10 times				
	Shock resistance	Impact force: 150 m/s^2, Test direction: 6 directions, three time each (up/down, front/behind, left/right)				
Material		Mold part: Nylon, Thermoplastic polyurethane, Sheath part: PVC				
Weight		Approx. 270 g	Approx. 390 g	Approx. 620 g	Approx. 1200 g	Approx. 2350 g

- I/O cables (straight, super bending resistance)

Item		FHV-VDBX2 5M	FHV-VDBX2 10 M
Cable length		5 m	10 m
Cable type		Super bending resistance cable	
Connector type		Straight connector	
Size	Power line	AWG19	
	Others	AWG26	
Outer diameter		7.2 + 0.7 mm dia.	
Min. bending radius		44 mm	
Usage environment	Ambient temperature range	Operating: -10 to +70°C, Storage: -25 to +85°C (with no icing or condensation)	
	Ambient humidity range	Operating & Storage: 0 to 93% (With no condensation)	
	Ambient atmosphere	No corrosive gases	
	Vibration tolerance	Oscillation frequency: 10 to 150Hz, Half amplitude: 0.35 mm, Vibration direction: X/Y/Z, Sweep time: 8 minutes/count, Sweep count: 10 times	
	Shock resistance	Impact force: 150 m/s^2, Test direction: 6 directions, three time each (up/down, front/behind, left/right)	
Material		Mold part: Nylon, PVC, Sheath part: PVC	
Weight		Approx. 420 g	Approx. 790 g

Item	FHV-VDBX 2M	FHV-VDBX 3M	FHV-VDB X 5M	FHV-VDBX 10 M
Cable length	2 m	3 m	5 m	10 m
Cable type	Super bending resistance cable			
Connector type	Straight connector			
Outer diameter	7.2 ± 0.7 mm dia.			
Min. bending radius	44 mm			

Item		FHV-VDBX 2M	FHV-VDBX 3M	FHV-VDB X 5M	FHV-VDBX 10 M
Usage environment	Ambient temperature range	Operating: -30 to +80°C, Storage: -30 to +100°C (with no icing or condensation)			
	Ambient humidity range	Operating & Storage: 0 to 93% (With no condensation)			
	Ambient atmosphere	No corrosive gases			
	Vibration tolerance	Oscillation frequency: 10 to 150Hz, Half amplitude: 0.35 mm, Vibration direction: X/Y/Z, Sweep time: 8 minutes/count, Sweep count: 10 times			
	Shock resistance	Impact force: 150 m/s^2, Test direction: 6 directions, three time each (up/down, front/behind, left/right)			
Material		Mold part: Nylon, Thermoplastic polyurethane, Sheath part: PVC			
Weight		Approx. 190 g	Approx. 260 g	Approx. 400 g	Approx. 750 g

The Super Bend Resistant cables (FHV-V□BX) do not protect against water. (If using them, the IP Protection level for the smart camera will not be IP67, but rather IP60.) If protection against water is required, please use a Super Bend Resistant cable (FHV-V□BX2), or Bend Resistant cable (FHV-V□B2/FHV-V□B).

- I/O cables (right angle, bending resistance)

Item		FHV-VDLB2 2M	FHV-VDLB2 3M	FHV-VDLB2 5M	FHV-VDLB2 10M	FHV-VDLB2 20M
Cable length		2 m	3 m	5 m	10 m	20 m
Cable type		Bending resistance cable				
Connector type		Right angle connector				
Size	Power line	AWG21				
	Others	AWG26				
Outer diameter		8.8±0.3 mm dia.				
Min. bending radius		Fixed use: 40 mm, Sliding use: 70 mm				
Usage environment	Ambient temperature range	Operating: -10 to +70°C, Storage: -25 to +85°C (with no icing or condensation)				
	Ambient humidity range	Operating & Storage: 0 to 93% (With no condensation)				
	Ambient atmosphere	No corrosive gases				
	Vibration tolerance	Oscillation frequency: 10 to 150Hz, Half amplitude: 0.35 mm, Vibration direction: X/Y/Z, Sweep time: 8 minutes/count, Sweep count: 10 times				
	Shock resistance	Impact force: 150 m/s^2, Test direction: 6 directions, three time each (up/down, front/behind, left/right)				
Material		Mold part: Nylon, PVC, Sheath part: PVC				
Weight		Approx. 250 g	Approx. 370 g	Approx. 590 g	Approx. 1170 g	Approx. 2310 g

Item		FHV-VDLB 2M	FHV-VDLB 3M	FHV-VDLB 5M	FHV-VDLB 10M	FHV-VDLB 20M
Cable length		2 m	3 m	5 m	10 m	20 m
Cable type		Bending resistance cable				
Connector type		Right angle connector				
Size	Power line	AWG21				
	Others	AWG26				
Outer diameter		9.0±0.3 mm dia.				
Min. bending radius		Fixed use: 54 mm, Sliding use: 72 mm				
Usage environment	Ambient temperature range	Operating: -30 to +80°C, Storage: -30 to +100°C (with no icing or condensation)				
	Ambient humidity range	Operating & Storage: 0 to 93% (With no condensation)				
	Ambient atmosphere	No corrosive gases				
	Vibration tolerance	Oscillation frequency: 10 to 150Hz, Half amplitude: 0.35 mm, Vibration direction: X/Y/Z, Sweep time: 8 minutes/count, Sweep count: 10 times				
	Shock resistance	Impact force: 150 m/s^2, Test direction: 6 directions, three time each (up/down, front/behind, left/right)				
Material		Mold part: Nylon, Thermoplastic polyurethane, Sheath part: PVC				
Weight		Approx. 270 g	Approx. 390 g	Approx. 620 g	Approx. 1200 g	Approx. 2350 g

- I/O cables (right angle, super bending resistance)

Item		FHV-VDLBX2 5M	FHV-VDLBX2 10M
Cable length		5 m	10 m
Cable type		Super bending resistance cable	
Connector type		Right angle connector	
Size	Power line	AWG19	
	Others	AWG26	
Outer diameter		7.2 + 0.7 mm dia.	
Min. bending radius		44 mm	
Usage environment	Ambient temperature range	Operating: -10 to +70°C, Storage: -25 to +85°C (with no icing or condensation)	
	Ambient humidity range	Operating & Storage: 0 to 93% (With no condensation)	
	Ambient atmosphere	No corrosive gases	
	Vibration tolerance	Oscillation frequency: 10 to 150Hz, Half amplitude: 0.35 mm, Vibration direction: X/Y/Z, Sweep time: 8 minutes/count, Sweep count: 10 times	
	Shock resistance	Impact force: 150 m/s^2, Test direction: 6 directions, three time each (up/down, front/behind, left/right)	
Material		Mold part: Nylon, PVC, Sheath part: PVC	
Weight		Approx. 420 g	Approx. 790 g

Item		FHV-VDLBX 2M	FHV-VDLBX 3M	FHV-VDLBX 5M	FHV-VDLBX 10M
Cable length		2 m	3 m	5 m	10 m
Cable type		Super bending resistance cable			
Connector type		Right angle connector			
Outer diameter		7.2 ± 0.7 mm dia.			
Min. bending radius		44 mm			
Usage environment	Ambient temperature range	Operating: -30 to +80°C, Storage: -30 to +100°C (with no icing or condensation)			
	Ambient humidity range	Operating & Storage: 0 to 93% (With no condensation)			
	Ambient atmosphere	No corrosive gases			
	Vibration tolerance	Oscillation frequency: 10 to 150Hz, Half amplitude: 0.35 mm, Vibration direction: X/Y/Z, Sweep time: 8 minutes/count, Sweep count: 10 times			
	Shock resistance	Impact force: 150 m/s^2, Test direction: 6 directions, three time each (up/down, front/behind, left/right)			
Material		Mold part: Nylon, Thermoplastic polyurethane, Sheath part: PVC			
Weight		Approx. 190 g	Approx. 260 g	Approx. 400 g	Approx. 750 g

The Super Bend Resistant cables (FHV-V□BX) do not protect against water. (If using them, the IP Protection level for the smart camera will not be IP67, but rather IP60.) If protection against water is required, please use a Super Bend Resistant cable (FHV-V□BX2), or Bend Resistant cable (FHV-V□B2/FHV-V□B).

Dimensions

- I/O cable (Straight, bending resistance)

FHV-VDB2

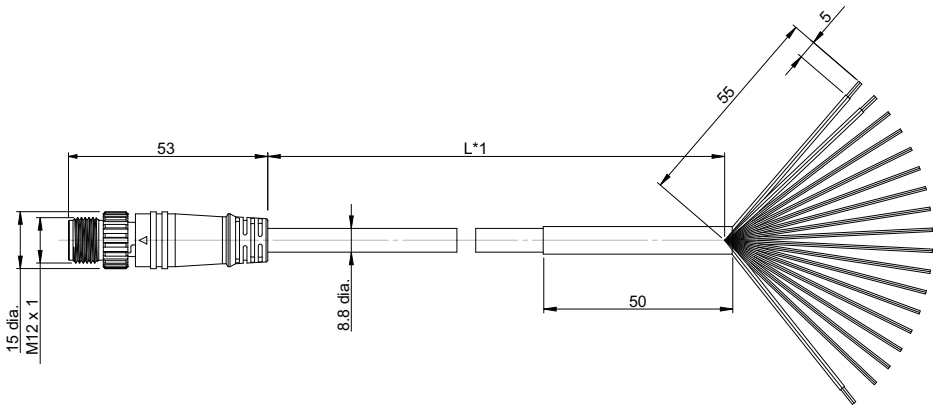

(Unit: mm)

*1. Cable lengths (L) are 2 m/3 m/5 m/10 m/20 m.

FHV-VDB

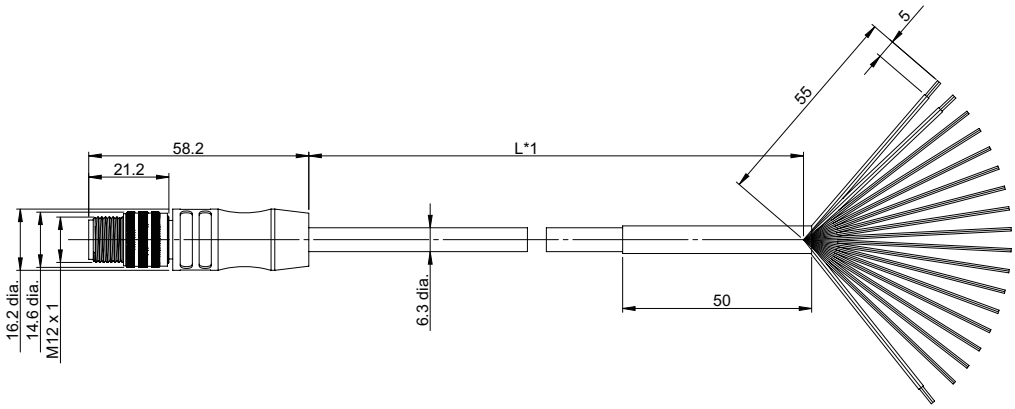

(Unit: mm)

*1. Cable lengths (L) are 2 m/3 m/5 m/10 m/20 m.

- I/O cable (Straight, super bending resistance)

FHV-VDBX2

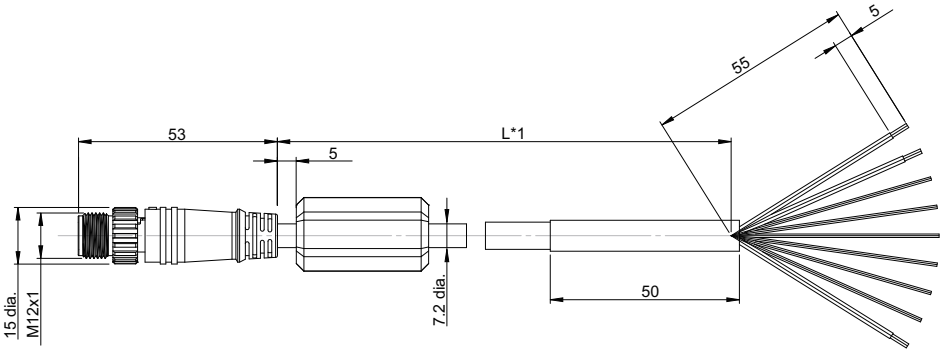

(Unit: mm)

*1. Cable lengths (L) are 5 m/10 m.

FHV-VDBX

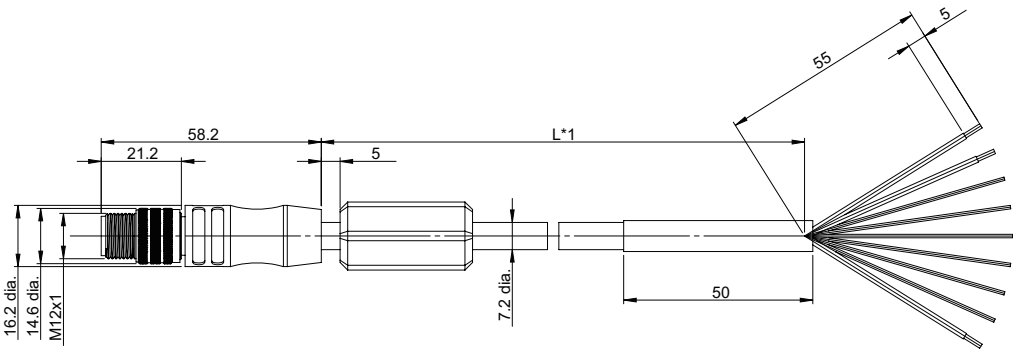

(Unit: mm)

*1. Cable lengths (L) are 2 m/3 m/5 m/10 m.

- I/O cable (Right angle, bending resistance)

FHV-VDLB2

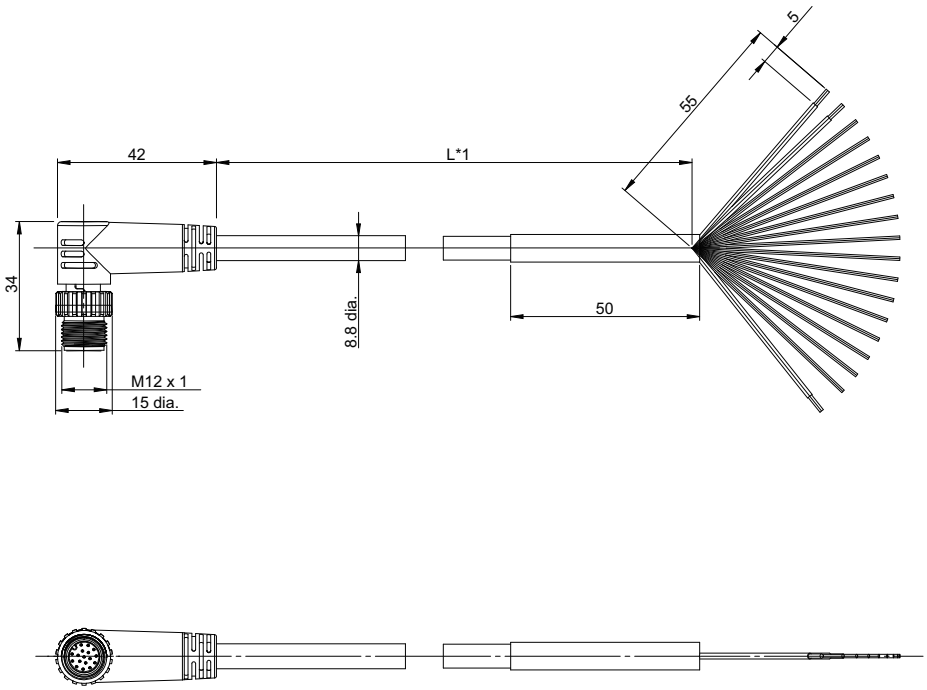

(Unit: mm)

*1. Cable lengths (L) are 2 m/3 m/5 m/10 m/20 m.

FHV-VDLB

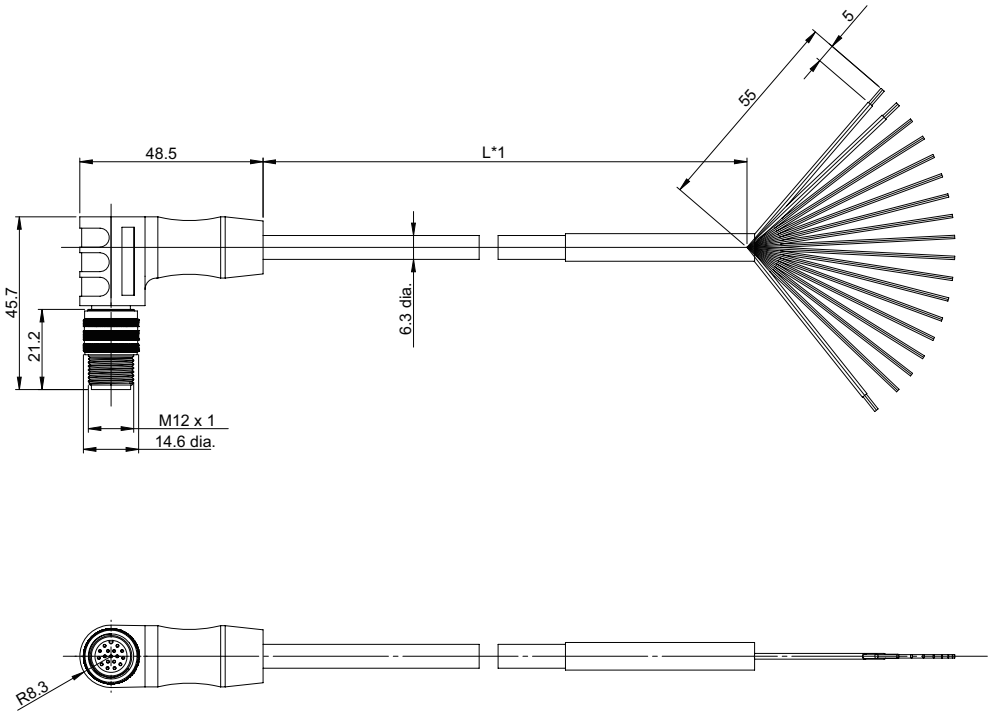

(Unit: mm)

*1. Cable lengths (L) are 2 m/3 m/5 m/10 m/20 m.

- I/O cable (Right-angle, super bending resistance)

FHV-VDLBX2

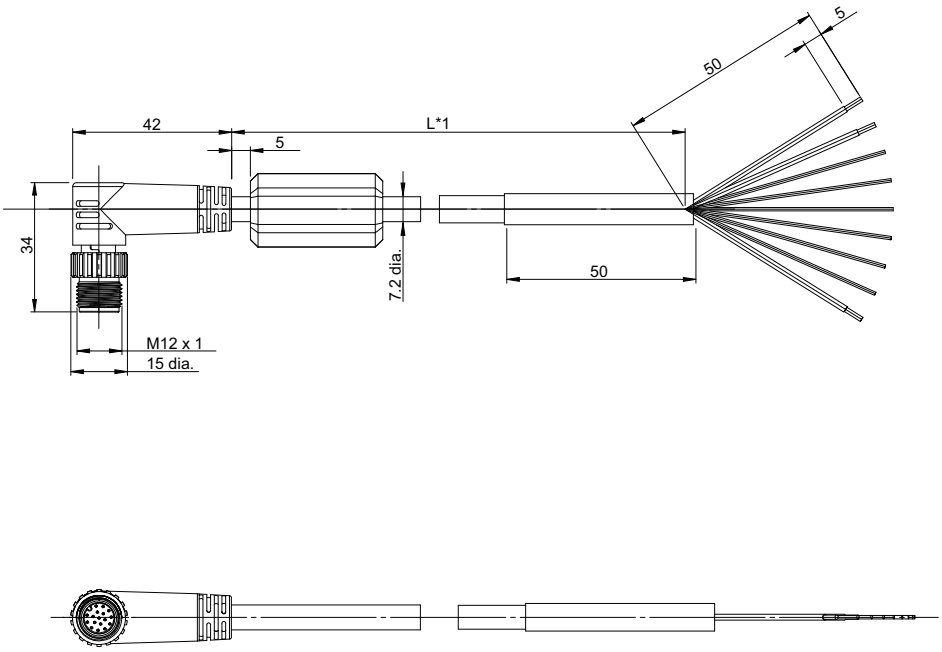

(Unit: mm)

*1. Cable lengths (L) are 5 m/10 m.

FHV-VDLBX

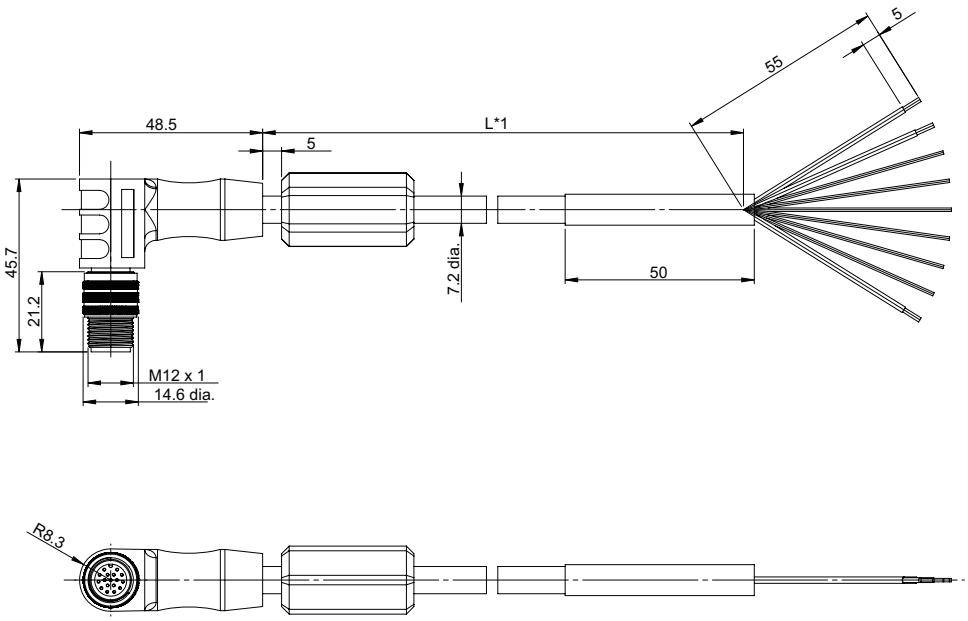

(Unit: mm)

*1. Cable lengths (L) are 2 m/3 m/5 m/10 m.

Additional Information

We have the 2D CAD data or 3D CAD data.
You can download CAD data from www.fa.omron.co.jp.

3-3-2 Ethernet Cables

Specifications

- Ethernet cables (straight, bending resistance)

Item		FHV-VNB2 2M	FHV-VNB2 3M	FHV-VNB2 5M	FHV-VNB2 10M	FHV-VNB2 20M
Cable length		2 m	3 m	5 m	10 m	20 m
Cable type		Bending resistance cable				
Connector type		Straight connector				
Outer diameter		6.7 ± 0.3 mm dia.				
Min. bending radius		Fixed use: 35 mm, Sliding use: 50 mm				
Usage environment	Ambient temperature range	Operating: -10 to +70°C, Storage: -25 to +85· (with no icing or condensation)				
	Ambient humidity range	Operating & Storage: 0 to 93% (with no condensation)				
	Ambient atmosphere	No corrosive gases				
	Vibration tolerance	Oscillation frequency: 10 to 150Hz, Half amplitude: 0.35 mm, Vibration direction: X/Y/Z, Sweep time: 8 minutes/count, Sweep count: 10 times				
	Shock resistance	Impact force: 150 m/s^2, Test direction: 6 directions, three time each (up/down, front/behind, left/right)				
Material		Mold part: PVC, Sheath part: PVC				
Weight		Approx. 140 g	Approx. 200 g	Approx. 310 g	Approx. 590 g	Approx. 1150 g

Item		FHV-VNB 2M	FHV-VNB 3M	FHV-VNB 5M	FHV-VNB 10M	FHV-VNB 20M
Cable length		2 m	3 m	5 m	10 m	20 m
Cable type		Bending resistance cable				
Connector type		Straight connector				
Outer diameter		7.2+0.3 mm dia.				
Min. bending radius		Fixed use: 35 mm, Sliding use: 70 mm				
Usage environment	Ambient temperature range	Operating: -40 to +80°C, Storage: -40 to +100· (with no icing or condensation)				
	Ambient humidity range	Operating & Storage: 0 to 93% (with no condensation)				
	Ambient atmosphere	No corrosive gases				
	Vibration tolerance	Oscillation frequency: 10 to 150Hz, Half amplitude: 0.35 mm, Vibration direction: X/Y/Z, Sweep time: 8 minutes/count, Sweep count: 10 times				
	Shock resistance	Impact force: 150 m/s^2, Test direction: 6 directions, three time each (up/down, front/behind, left/right)				
Material		Mold part: Nylon, Thermoplastic polyurethane, Sheath part: Polyurethane				

Item	FHV-VNB 2M	FHV-VNB 3M	FHV-VNB 5M	FHV-VNB 10M	FHV-VNB 20M
Weight	Approx. 210 g	Approx. 240 g	Approx. 310 g	Approx. 380 g	Approx. 730 g

- Ethernet cables (straight, super bending resistance)

Item		FHV-VNBX2 5M	FHV-VNBX2 10M
Cable length		5 m	10 m
Cable type		Super bending resistance cable	
Connector type		Straight connector	
Outer diameter		6.6 + 0.7 mm dia.	
Min. bending radius		40 mm	
Usage environment	Ambient temperature range	Operating: -10 to +70°C, Storage: -25 to +85°C (with no icing or condensation)	
	Ambient humidity range	Operating & Storage: 0 to 93% (With no condensation)	
	Ambient atmosphere	No corrosive gases	
	Vibration tolerance	Oscillation frequency: 10 to 150Hz, Half amplitude: 0.35 mm, Vibration direction: X/Y/Z, Sweep time: 8 minutes/count, Sweep count: 10 times	
	Shock resistance	Impact force: 150 m/s^2, Test direction: 6 directions, three time each (up/down, front/behind, left/right)	
Material		Mold part: PVC, Sheath part: PVC	
Weight		Approx. 390 g	Approx. 730 g

Item		FHV-VNBX 2M	FHV-VNBX 3M	FHV-VNBX 5M	FHV-VNBX 10M
Cable length		2 m	3 m	5 m	10 m
Cable type		Super bending resistance cable			
Connector type		Straight connector			
Outer diameter		6.3 + 0.6 mm dia.			
Min. bending radius		38 mm			
Usage environment	Ambient temperature range	Operating: -30 to +80°C, Storage: -30 to +100°C (with no icing or condensation)			
	Ambient humidity range	Operating & Storage: 0 to 93% (With no condensation)			
	Ambient atmosphere	No corrosive gases			
	Vibration tolerance	Oscillation frequency: 10 to 150Hz, Half amplitude: 0.35 mm, Vibration direction: X/Y/Z, Sweep time: 8 minutes/count, Sweep count: 10 times			
	Shock resistance	Impact force: 150 m/s^2, Test direction: 6 directions, three time each (up/down, front/behind, left/right)			
Material		Mold part: Nylon, Thermoplastic polyurethane, Sheath part: Low friction PVC			
Weight		Approx. 170 g	Approx. 220 g	Approx. 330 g	Approx. 590 g

The Super Bend Resistant cables (FHV-V□BX) do not protect against water. (If using them, the IP Protection level for the smart camera will not be IP67, but rather IP60.) If protection against water is

required, please use a Super Bend Resistant cable (FHV-V□BX2), or Bend Resistant cable (FHV-V□B2/FHV-V□B).

- Ethernet cables (right angle, bending resistance)

Item		FHV-VNLB2 2M	FHV-VNLB2 3M	FHV-VNLB2 5M	FHV-VNLB2 10M	FHV-VNLB2 20M
Cable length		2 m	3 m	5 m	10 m	20 m
Cable type		Bending resistance cable				
Connector type		Right angle connector				
Outer diameter		6.7 ± 0.3 mm dia.				
Min. bending radius		Fixed use: 35 mm, Sliding use: 50 mm				
Usage environment	Ambient temperature range	Operating: -10 to +70°C, Storage: -25 to +85°C (with no icing or condensation)				
	Ambient humidity range	Operating & Storage: 0 to 93% (With no condensation)				
	Ambient atmosphere	No corrosive gases				
	Vibration tolerance	Oscillation frequency: 10 to 150Hz, Half amplitude: 0.35 mm, Vibration direction: X/Y/Z, Sweep time: 8 minutes/count, Sweep count: 10 times				
	Shock resistance	Impact force: 150 m/s^2, Test direction: 6 directions, three time each (up/down, front/behind, left/right)				
Material		Mold part: PVC, Sheath part: PVC				
Weight		Approx. 140 g	Approx. 200 g	Approx. 310 g	Approx. 590 g	Approx. 1150 g

Item		FHV-VNLB 2M	FHV-VNLB 3M	FHV-VNLB 5M	FHV-VNLB 10M	FHV-VNLB 20M
Cable length		2 m	3 m	5 m	10 m	20 m
Cable type		Bending resistance cable				
Connector type		Right angle connector				
Outer diameter		7.2+0.3 mm dia.				
Min. bending radius		Fixed use: 35 mm, Sliding use: 70 mm				
Usage environment	Ambient temperature range	Operating: -40 to +80°C, Storage: -40 to +100°C (with no icing or condensation)				
	Ambient humidity range	Operating & Storage: 0 to 93% (With no condensation)				
	Ambient atmosphere	No corrosive gases				
	Vibration tolerance	Oscillation frequency: 10 to 150Hz, Half amplitude: 0.35 mm, Vibration direction: X/Y/Z, Sweep time: 8 minutes/count, Sweep count: 10 times				
	Shock resistance	Impact force: 150 m/s^2, Test direction: 6 directions, three time each (up/down, front/behind, left/right)				
Material		Mold part: Nylon, Thermoplastic polyurethane, Sheath part: Polyurethane				
Weight		Approx. 210 g	Approx. 240 g	Approx. 310 g	Approx. 380 g	Approx. 730 g

- Ethernet cables (right angle, super bending resistance)

Item		FHV-VNLBX2 5M	FHV-VNLBX2 10M
Cable length		5 m	10 m
Cable type		Bending resistance cable	
Connector type		Right angle connector	
Outer diameter		6.6 + 0.7 mm dia.	
Min. bending radius		40 mm	
Usage environment	Ambient temperature range	Operating: -10 to +70°C, Storage: -25 to +85°C (with no icing or condensation)	
	Ambient humidity range	Operating & Storage: 0 to 93% (With no condensation)	
	Ambient atmosphere	No corrosive gases	
	Vibration tolerance	Oscillation frequency: 10 to 150Hz, Half amplitude: 0.35 mm, Vibration direction: X/Y/Z, Sweep time: 8 minutes/count, Sweep count: 10 times	
	Shock resistance	Impact force: 150 m/s^2, Test direction: 6 directions, three time each (up/down, front/behind, left/right)	
Material		Mold part: PVC, Sheath part: PVC	
Weight		Approx. 390 g	Approx. 730 g

Item		FHV-VNLBX 2M	FHV-VNLBX 3M	FHV-VNLBX 5M	FHV-VNLBX 10M
Cable length		2 m	3 m	5 m	10 m
Cable type		Bending resistance cable			
Connector type		Right angle connector			
Outer diameter		6.3 + 0.6 mm dia.			
Min. bending radius		38 mm			
Usage environment	Ambient temperature range	Operating: -30 to +80°C, Storage: -30 to +100°C (with no icing or condensation)			
	Ambient humidity range	Operating & Storage: 0 to 93% (With no condensation)			
	Ambient atmosphere	No corrosive gases			
	Vibration tolerance	Oscillation frequency: 10 to 150Hz, Half amplitude: 0.35 mm, Vibration direction: X/Y/Z, Sweep time: 8 minutes/count, Sweep count: 10 times			
	Shock resistance	Impact force: 150 m/s^2, Test direction: 6 directions, three time each (up/down, front/behind, left/right)			
Material		Mold part: Nylon, Thermoplastic polyurethane, Sheath part: Low friction PVC			
Weight		Approx. 170 g	Approx. 220 g	Approx. 330 g	Approx. 590 g

The Super Bend Resistant cables (FHV-V□BX) do not protect against water. (If using them, the IP Protection level for the smart camera will not be IP67, but rather IP60.) If protection against water is required, please use a Super Bend Resistant cable (FHV-V□BX2), or Bend Resistant cable (FHV-V□B2/FHV-V□B).

Dimensions

- Ethernet cable (Straight, bending resistance)

FHV-VNB2

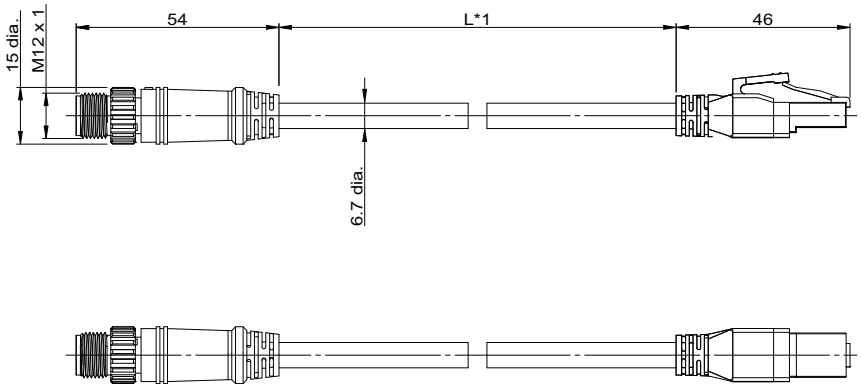

(Unit: mm)

*1. Cable lengths (L) are 2 m/3 m/5 m/10 m/20 m.

FHV-VNB

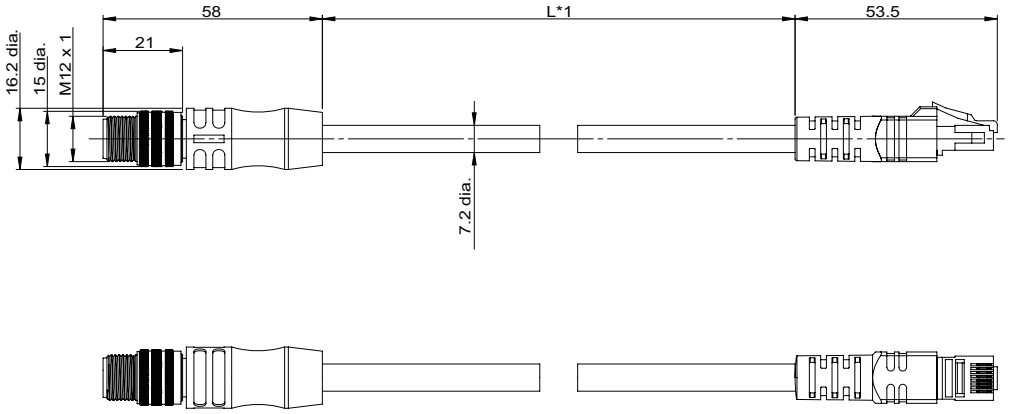

(Unit: mm)

*1. Cable lengths (L) are 2 m/3 m/5 m/10 m/20 m.

- Ethernet cable (Straight, super bending resistance)

FHV-VNBX2

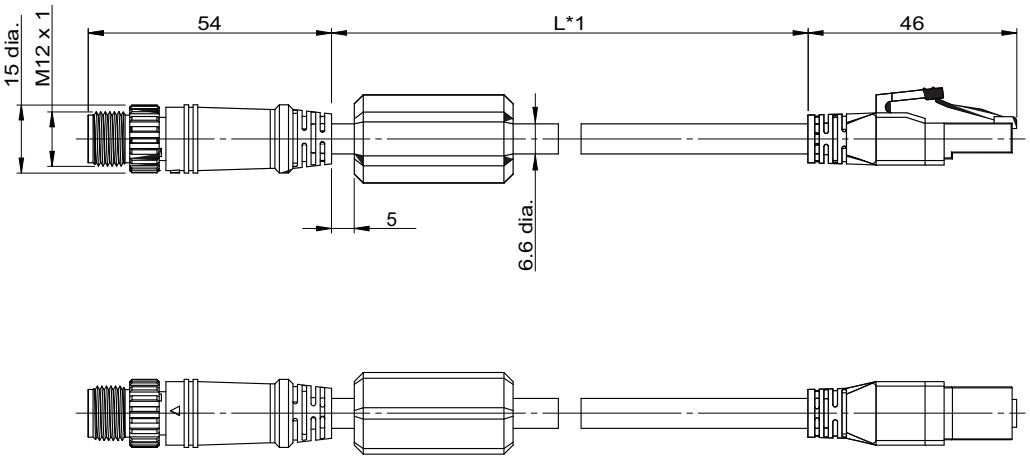

(Unit: mm)

*1. Cable lengths (L) are 5 m/10 m.

FHV-VNBX

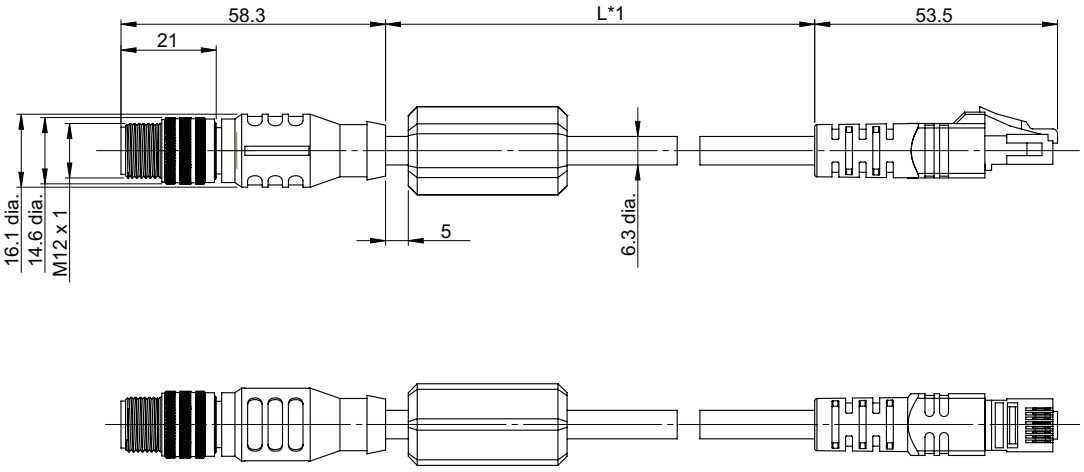

(Unit: mm)

*1. Cable lengths (L) are 2 m/3 m/5 m/10 m.

- Ethernet cable (Right angle, bending resistance)

FHV-VNLB2

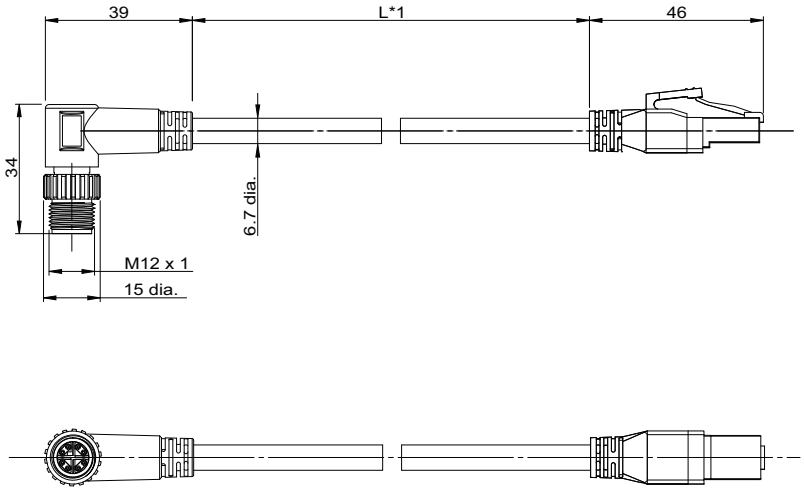

(Unit: mm)

*1. Cable lengths (L) are 2 m/3 m/5 m/10 m/20 m.

FHV-VNLB

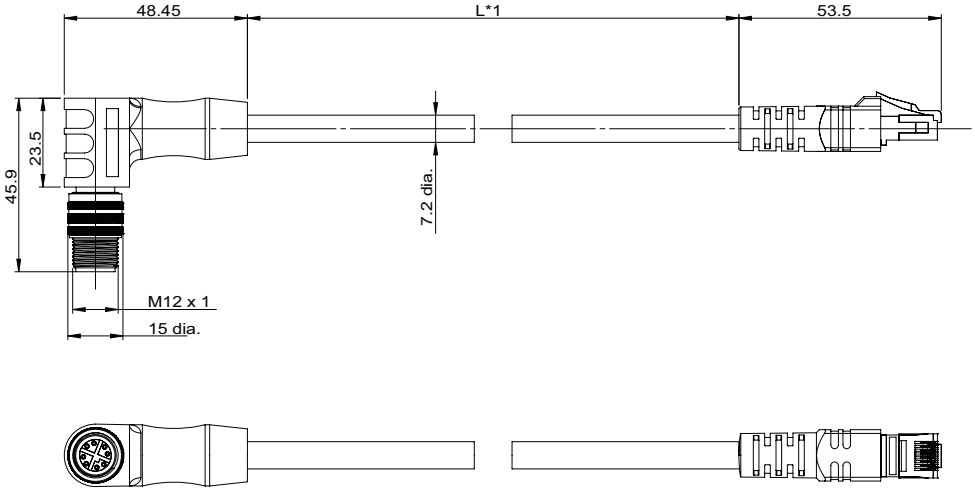

(Unit: mm)

*1. Cable lengths (L) are 2 m/3 m/5 m/10 m/20 m.

- Ethernet cable (Right angle, super bending resistance)

FHV-VNLBX2

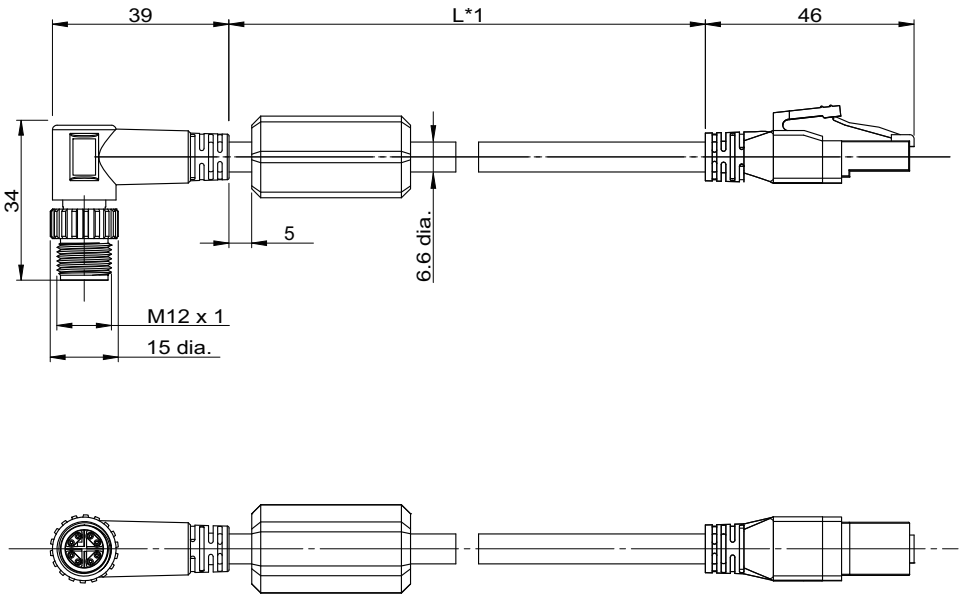

(Unit: mm)

*1. Cable lengths (L) are 5 m/10 m.

FHV-VNLBX

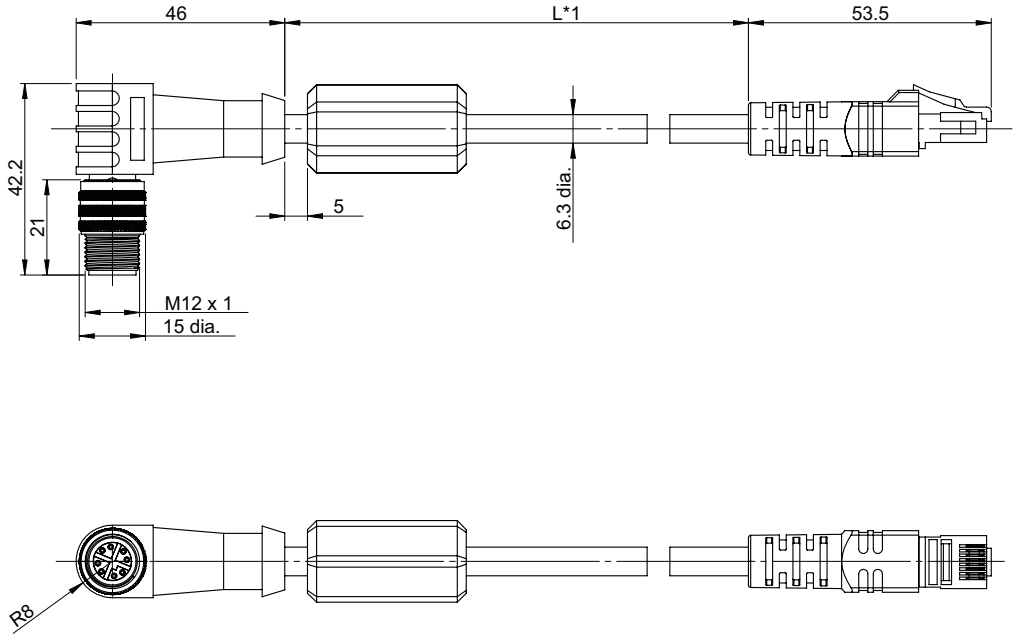

(Unit: mm)

*1. Cable lengths (L) are 2 m/3 m/5 m/10 m.

Additional Information

We have the 2D CAD data or 3D CAD data.
You can download CAD data from www.fa.omron.co.jp.

3-3-3 Smart Camera Data Unit Cables

Specifications

- Smart Camera Unit Cables (Straight, bending resistance)

Item		FHV-VUB2 2M	FHV-VUB2 3M	FHV-VUB2 5M	FHV-VUB2 10M	FHV-VUB2 20M
Cable length		2 m	3 m	5 m	10 m	20 m
Cable type		Bending resistance cable				
Connector type		Straight connector				
Outer diameter		7.8 ± 0.3 mm dia.				
Min. bending radius		Fixed use: 40 mm, Sliding use: 65 mm				
Usage environment	Ambient temperature range	Operating: -10 to +70°C, Storage: -25 to +85°C (with no icing or condensation)				
	Ambient humidity range	Operating & Storage: 0 to 93% (with no condensation)				
	Ambinent atmosphere	No corrosive gases				
	Vibration tolerance	Oscillation frequency: 10 to 150Hz, Half amplitude: 0.35 mm, Vibration direction: X/Y/Z, Sweep time: 8 minutes/count, Sweep count: 10 times				
	Shock resistance	Impact force: 150 m/s^2, Test direction: 6 directions, three time each (up/down, front/behind, left/right)				
Material		Mold part: PVC, Sheath part: PVC				
Weight		Approx. 200 g	Approx. 290 g	Approx. 470 g	Approx. 900 g	Approx. 1780 g

Item		FHV-VUB 2M	FHV-VUB 3M	FHV-VUB 5M	FHV-VUB 10M	FHV-VUB 20M
Cable length		2 m	3 m	5 m	10 m	20 m
Cable type		Bending resistance cable				
Connector type		Straight connector				
Outer diameter		7.9 ± 0.2 mm dia.				
Min. bending radius		47 mm				
Usage environment	Ambient temperature range	Operating: -10 to +60°C, Storage: -10 to +60°C (with no icing or condensation)				
	Ambient humidity range	Operating & Storage: 0 to 93% (with no condensation)				
	Ambinent atmosphere	No corrosive gases				
	Vibration tolerance	Oscillation frequency: 10 to 150Hz, Half amplitude: 0.35 mm, Vibration direction: X/Y/Z, Sweep time: 8 minutes/count, Sweep count: 10 times				
	Shock resistance	Impact force: 150 m/s^2, Test direction: 6 directions, three time each (up/down, front/behind, left/right)				
Material		Mold part: Nylon and Thermoplastic polyurethane, Sheath part: PVC				

Item	FHV-VUB 2M	FHV-VUB 3M	FHV-VUB 5M	FHV-VUB 10M	FHV-VUB 20M
Weight	Approx. 220 g	Approx. 310 g	Approx. 500 g	Approx. 980 g	Approx. 1930 g

- Smart Camera Data Unit Cables (Straight, super bending resistance)

Item		FHV-VUBX2 5M	FHV-VUBX2 10M
Cable length		5 m	10 m
Cable type		Super bending resistance cable	
Connector type		Straight connector	
Outer diameter		7.5 + 0.6 mm dia.	
Min. bending radius		47 mm	
Usage environment	Ambient temperature range	Operating: -10 to +70°C, Storage: -25 to +85°C (with no icing or condensation)	
	Ambient humidity range	Operating & Storage: 0 to 93% (with no condensation)	
	Ambinent atmosphere	No corrosive gases	
	Vibration tolerance	Oscillation frequency: 10 to 150Hz, Half amplitude: 0.35 mm, Vibration direction: X/Y/Z, Sweep time: 8 minutes/count, Sweep count: 10 times	
	Shock resistance	Impact force: 150 m/s^2, Test direction: 6 directions, three time each (up/down, front/behind, left/right)	
Material		Mold part: PVC, Sheath part: PVC	
Weight		Approx. 490 g	Approx. 920 g

Item		FHV-VUBX 2M	FHV-VUBX 3M	FHV-VUBX 5M	FHV-VUBX 10M
Cable length		2 m	3 m	5 m	10 m
Cable type		Super bending resistance cable			
Connector type		Straight connector			
Outer diameter		7.5 ± 0.6 mm dia.			
Min. bending radius		47 mm			
Usage environment	Ambient temperature range	Operating: -10 to +60°C, Storage: -10 to +60°C (with no icing or condensation)			
	Ambient humidity range	Operating & Storage: 0 to 93% (with no condensation)			
	Ambinent atmosphere	No corrosive gases			
	Vibration tolerance	Oscillation frequency: 10 to 150Hz, Half amplitude: 0.35 mm, Vibration direction: X/Y/Z, Sweep time: 8 minutes/count, Sweep count: 10 times			
	Shock resistance	Impact force: 150 m/s^2, Test direction: 6 directions, three time each (up/down, front/behind, left/right)			
Material		Mold part: Nylon and Thermoplastic polyurethane, Sheath part: PVC			
Weight		Approx. 200 g	Approx. 280 g	Approx. 440 g	Approx. 860 g

The Super Bend Resistant cables (FHV-V□BX) do not protect against water. (If using them, the IP Protection level for the smart camera will not be IP67, but rather IP60.) If protection against water is

required, please use a Super Bend Resistant cable (FHV-V□BX2), or Bend Resistant cable (FHV-V□B2/FHV-V□B).

- Smart Camera Data Unit Cables (Right-angle, bending resistance)

Item		FHV-VULB2 2M	FHV-VULB2 3M	FHV-VULB2 5M	FHV-VULB2 10M	FHV-VULB2 20M
Cable length		2 m	3 m	5 m	10 m	20 m
Cable type		Bending resistance cable				
Connector type		Right-angle connector				
Outer diameter		7.8 ± 0.3 mm dia.				
Min. bending radius		Fixed use: 40 mm, Sliding use: 65 mm				
Usage environment	Ambient temperature range	Operating: -10 to +70°C, Storage: -25 to +85°C (with no icing or condensation)				
	Ambient humidity range	Operating & Storage: 0 to 93% (with no condensation)				
	Ambinent atmosphere	No corrosive gases				
	Vibration tolerance	Oscillation frequency: 10 to 150Hz, Half amplitude: 0.35 mm, Vibration direction: X/Y/Z, Sweep time: 8 minutes/count, Sweep count: 10 times				
	Shock resistance	Impact force: 150 m/s^2, Test direction: 6 directions, three time each (up/down, front/behind, left/right)				
Material		Mold part: PVC, Sheath part: PVC				
Weight		Approx. 200 g	Approx. 290 g	Approx. 470 g	Approx. 900 g	Approx. 1780 g

Item		FHV-VULB 2M	FHV-VULB 3M	FHV-VULB 5M	FHV-VULB 10M	FHV-VULB 20M
Cable length		2 m	3 m	5 m	10 m	20 m
Cable type		Bending resistance cable				
Connector type		Right-angle connector				
Outer diameter		7.9 ± 0.2 mm dia.				
Min. bending radius		47 mm				
Usage environment	Ambient temperature range	Operating: -10 to +60°C, Storage: -10 to +60°C (with no icing or condensation)				
	Ambient humidity range	Operating & Storage: 0 to 93% (with no condensation)				
	Ambinent atmosphere	No corrosive gases				
	Vibration tolerance	Oscillation frequency: 10 to 150Hz, Half amplitude: 0.35 mm, Vibration direction: X/Y/Z, Sweep time: 8 minutes/count, Sweep count: 10 times				
	Shock resistance	Impact force: 150 m/s^2, Test direction: 6 directions, three time each (up/down, front/behind, left/right)				
Material		Mold part: Nylon and Thermoplastic polyurethane, Sheath part: PVC				
Weight		Approx. 220 g	Approx. 310 g	Approx. 500 g	Approx. 980 g	Approx. 1930 g

- Smart Camera Data Unit Cables (Right-angle, super bending resistance)

Item		FHV-VULBX2 5M	FHV-VULBX2 10M
Cable length		5 m	10 m
Cable type		Bending resistance cable	
Connector type		Right-angle connector	
Outer diameter		7.5 + 0.6 mm dia.	
Min. bending radius		47 mm	
Usage environment	Ambient temperature range	Operating: -10 to +70°C, Storage: -25 to +85°C (with no icing or condensation)	
	Ambient humidity range	Operating & Storage: 0 to 93% (with no condensation)	
	Ambinent atmosphere	No corrosive gases	
	Vibration tolerance	Oscillation frequency: 10 to 150Hz, Half amplitude: 0.35 mm, Vibration direction: X/Y/Z, Sweep time: 8 minutes/count, Sweep count: 10 times	
	Shock resistance	Impact force: 150 m/s^2, Test direction: 6 directions, three time each (up/down, front/behind, left/right)	
Material		Mold part: PVC Sheath part: PVC	
Weight		Approx. 480 g	Approx. 920 g

Item		FHV-VULBX 2M	FHV-VULBX 3M	FHV-VULBX 5M	FHV-VULBX 10M
Cable length		2 m	3 m	5 m	10 m
Cable type		Bending resistance cable			
Connector type		Right-angle connector			
Outer diameter		7.5 ± 0.6 mm dia.			
Min. bending radius		47 mm			
Usage environment	Ambient temperature range	Operating: -10 to +60°C, Storage: -10 to +60°C (with no icing or condensation)			
	Ambient humidity range	Operating & Storage: 0 to 93% (with no condensation)			
	Ambinent atmosphere	No corrosive gases			
	Vibration tolerance	Oscillation frequency: 10 to 150Hz, Half amplitude: 0.35 mm, Vibration direction: X/Y/Z, Sweep time: 8 minutes/count, Sweep count: 10 times			
	Shock resistance	Impact force: 150 m/s^2, Test direction: 6 directions, three time each (up/down, front/behind, left/right)			
Material		Mold part: Nylon and Thermoplastic polyurethane Sheath part: PVC			
Weight		Approx. 200 g	Approx. 280 g	Approx. 440 g	Approx. 860 g

The Super Bend Resistant cables (FHV-V□BX) do not protect against water. (If using them, the IP Protection level for the smart camera will not be IP67, but rather IP60.) If protection against water is required, please use a Super Bend Resistant cable (FHV-V□BX2), or Bend Resistant cable (FHV-V□B2/FHV-V□B).

Dimensions

- Smart Camera Data Unit Cable (Straight, bending resistance)

FHV-VUB2

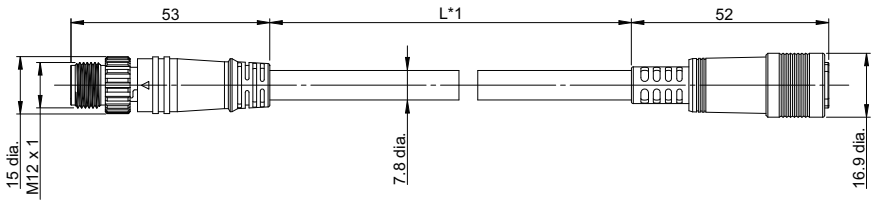

(Unit: mm)

*1. Cable lengths (L) are 2 m/3 m/5 m/10 m/20 m.

FHV-VUB

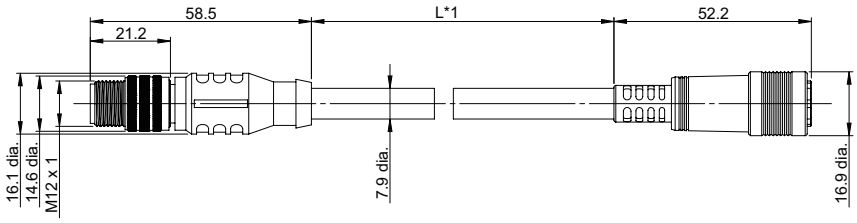

(Unit: mm)

*1. Cable lengths (L) are 2 m/3 m/5 m/10 m/20 m.

- Smart Camera Data Unit Cable (Straight, super bending resistance)

FHV-VUBX2

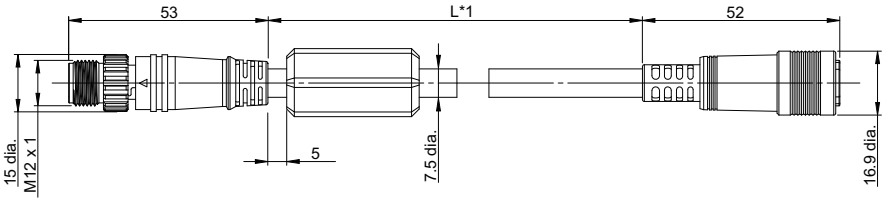

(Unit: mm)

*1. Cable lengths (L) are 5 m/10 m.

FHV-VUBX

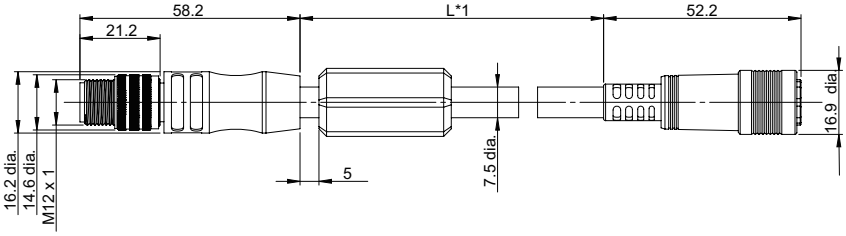

(Unit: mm)

*1. Cable lengths (L) are 2 m/3 m/5 m/10 m.

- Smart Camera Data Unit Cable (Right-angle, bending resistance)

FHV-VULB2

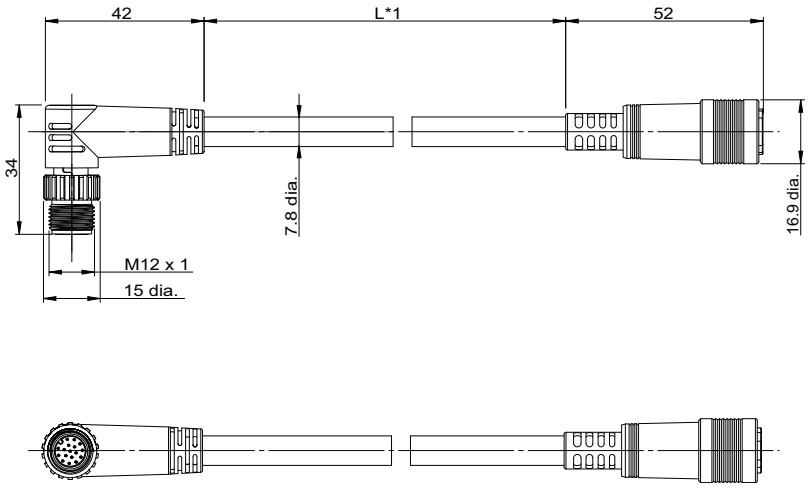

(Unit: mm)

*1. Cable lengths (L) are 2 m/3 m/5 m/10 m/20 m.

FHV-VULB

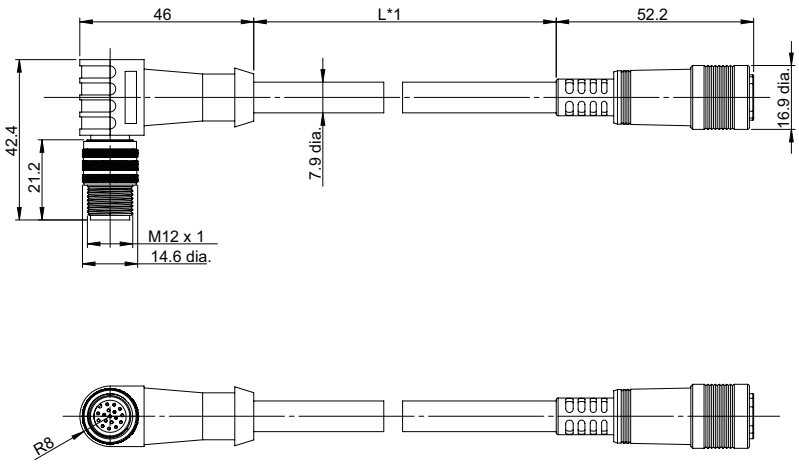

(Unit: mm)

*1. Cable lengths (L) are 2 m/3 m/5 m/10 m/20 m.

- Smart Camera Data Unit Cable (Right-angle, super bending resistance)

FHV-VULBX2

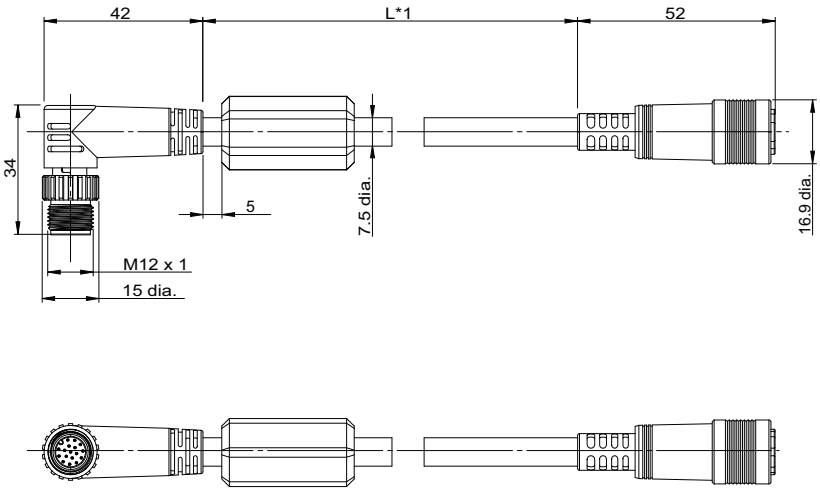

(Unit: mm)

*1. Cable lengths (L) are 5 m/10 m.

FHV-VULBX

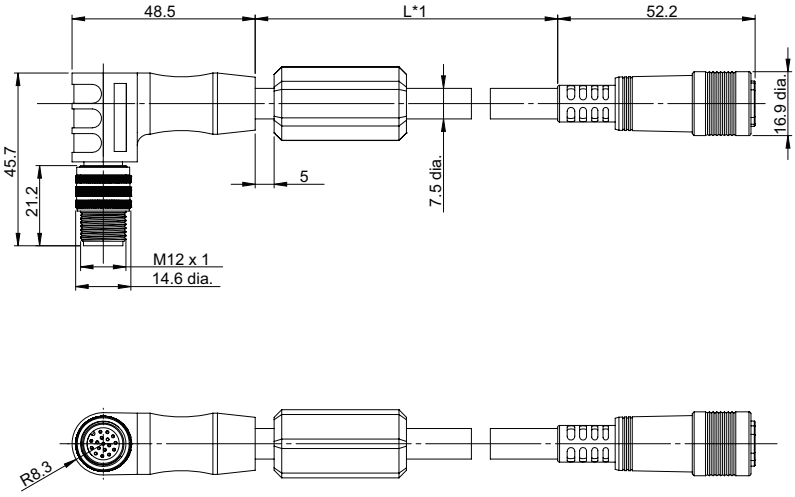

(Unit: mm)

*1. Cable lengths (L) are 2 m/3 m/5 m/10 m.

Additional Information

We have the 2D CAD data or 3D CAD data.
You can download CAD data from www.fa.omron.co.jp.

3-3-4 Junction cable for external lighting

Specifications

Item		FHV-VFLX-GD
Cable length		0.1 m
Outer diameter		4.0 ± 0.1 mm dia.
Min. bending radius		15 mm
Usage environment	Ambient temperature range	Operating: 0 to +40°C, Storage: -25 to +65°C (with no icing or condensation)
	Ambient humidity range	Operating & Storage: 0 to 93% (With no condensation)
	Ambient atmosphere	No corrosive gases
	Vibration tolerance	Oscillation frequency: 10 to 150Hz, Half amplitude: 0.35 mm, Vibration direction: X/Y/Z, Sweep time: 8 minute/count, Sweep count: 10
	Shock resistance	Impact force: 150 m/s^2, Test direction: 6 directions, three time each (up/down, front/behind, left/right)
Material		Shell part: Zinc alloy and Brass, Sheath part: Heat-resistant oilproof polyvinyl chloride
Weight		Approx. 30 g

Dimensions

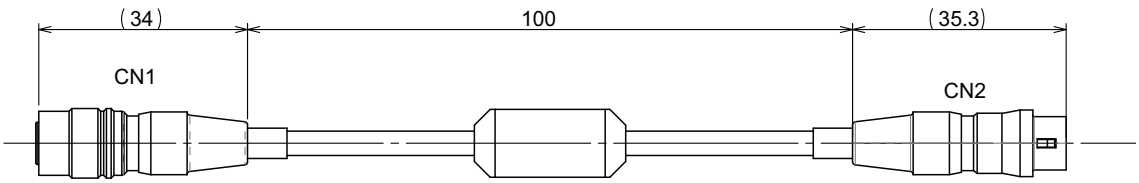

(Unit: mm)

Additional Information

We have the 2D CAD data or 3D CAD data.
You can download CAD data from www.fa.omron.co.jp.

3-4 Lens Modules

3-4-1 Specifications

- High-speed lens modules

Item		FHV-LEM-	
		H06	H19
System		Liquid lens auto focus	
Focal length		6 mm	19 mm
Installation distance		102 to 650 mm	202 to 1050 mm
Field of view range	0.4 M pixels	64×48 mm to 505×376 mm	50×37 mm to 266×200 mm
	1.6 M pixels:		
	3.2 M pixels:	92×68 mm to 731×539 mm	71×53 mm to 378×284 mm
	6.3 M pixels:	97×63 mm to 766×499 mm	74×49 mm to 394×264 mm
Usage environment	Ambient temperature range	Operating: 0 to +40°C, Storage: -25 to +65°C (with no icing or condensation)	
	Ambient humidity range	Operating & Storage: 35 to 85% (with no condensation)	
	Ambient atmosphere	No corrosive gases	
	Vibration tolerance	Oscillation frequency: 10 to 150Hz, Half amplitude: 0.35 mm, Vibration direction: X/Y/Z, Sweep time: 8 minutes/count, Sweep count: 10 times	
	Shock resistance	Impact force: 150 m/s^2, Test direction: 6 directions, three time each (up/down, front/behind, left/right)	
External shape	Dimension	50 mm × 41.1 mm × 37.1 mm (HxWxD)	50 mm × 41.1 mm × 36.3 mm (HxWxD)
	Weight	Approx. 25 g	
	Case material	Polycarbonate	
Accessories		• Special cover for FHV-LEM-H: 1 • Screws: M3×8 mm: 5 (including one spare piece) • Instruction sheet : 1 • Compliance sheet: 1	

- Standard lens modules

Item		FHV-LEM-				
		S06	S09	S12	S16	S25
System		Mechanical auto focus				
Focal length		6 mm	9 mm	12 mm	16 mm	25 mm
Field of view range	0.4 M pixels	39×29 to 845×624mm	24×18 to 543×407mm	17×13 to 407×305mm	27×20 to 614×461mm	30×23 to 391×293mm
	1.6 M pixels:					
	3.2 M pixels:	57×42 to 1234×905mm	34×25 to 772×579mm	24×18 to 579×434mm	38×29 to 874×655mm	43×33 to 556×417mm
	6.3 M pixels:	50×39 to 1293×836mm	35×23 to 807×538mm	25×17 to 606×404mm	40×27 to 913×608mm	45×30 to 581×387mm
Installation distance		59 to 1000 mm	60 to 1000 mm	60 to 1000 mm	110 to 2000 mm	188 to 2000 mm

Item		FHV-LEM-				
		S06	S09	S12	S16	S25
Usage environment	Ambient temperature range	Operating: 0 to +40°C, Storage: -25 to +65°C (with no icing or condensation)				
	Ambient humidity range	Operating & Storage: 35 to 85% (with no condensation)				
	Ambient atmosphere	No corrosive gases				
	Vibration tolerance	Oscillation frequency: 10 to 150Hz, Half amplitude: 0.15 mm*1, Vibration direction: X/Y/Z, Sweep time: 8 minutes/count, Sweep count: 10 times				
	Shock resistance	Impact force: 150 m/s^2, Test direction: 6 directions, three time each (up/down, front/behind, left/right)				
External shape	Dimension	50 mm × 41 mm × 31 mm (HxWxD)				
	Weight	Approx. 50 g				
	Case material	Polycarbonate				
Accessories		• Special cover for FHV-LEM-S: 1 • Screws: M3×8 mm: 5 (including one spare piece) • Instruction sheet : 1 • Compliance sheet: 1				

*1. When the standard lens module is mounted to the product, the specifications of vibration tolerance are changed.

3-4-2 Dimensions

- FHV-LEM-H06

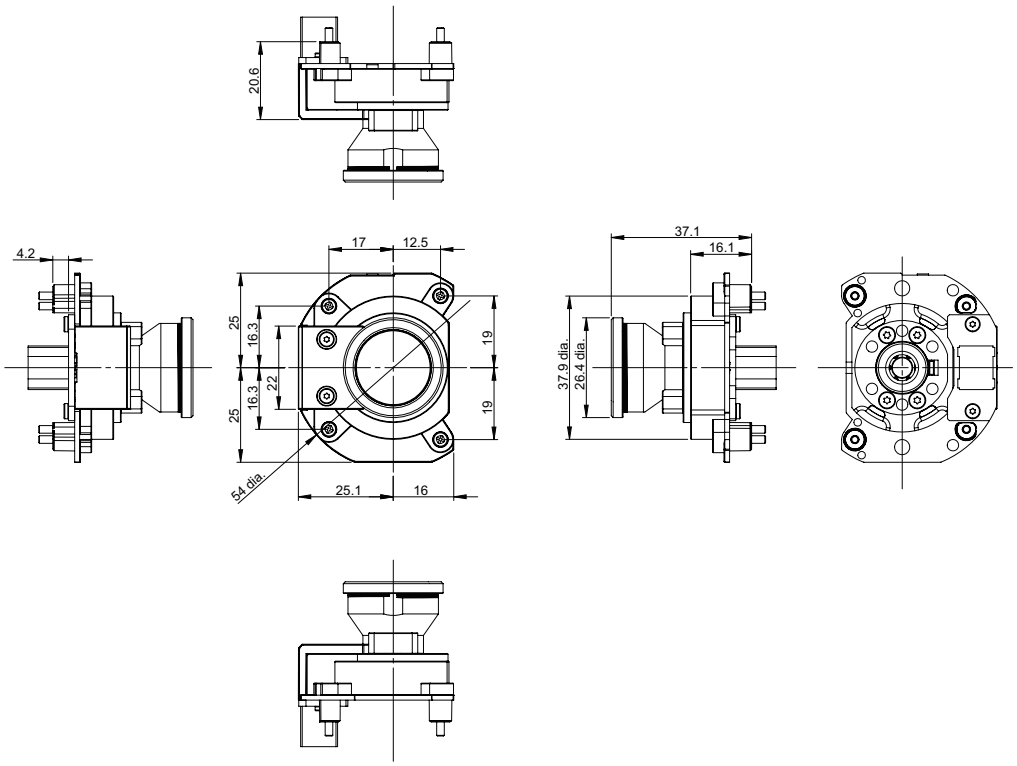

(Unit: mm)

- FHV-LEM-H19

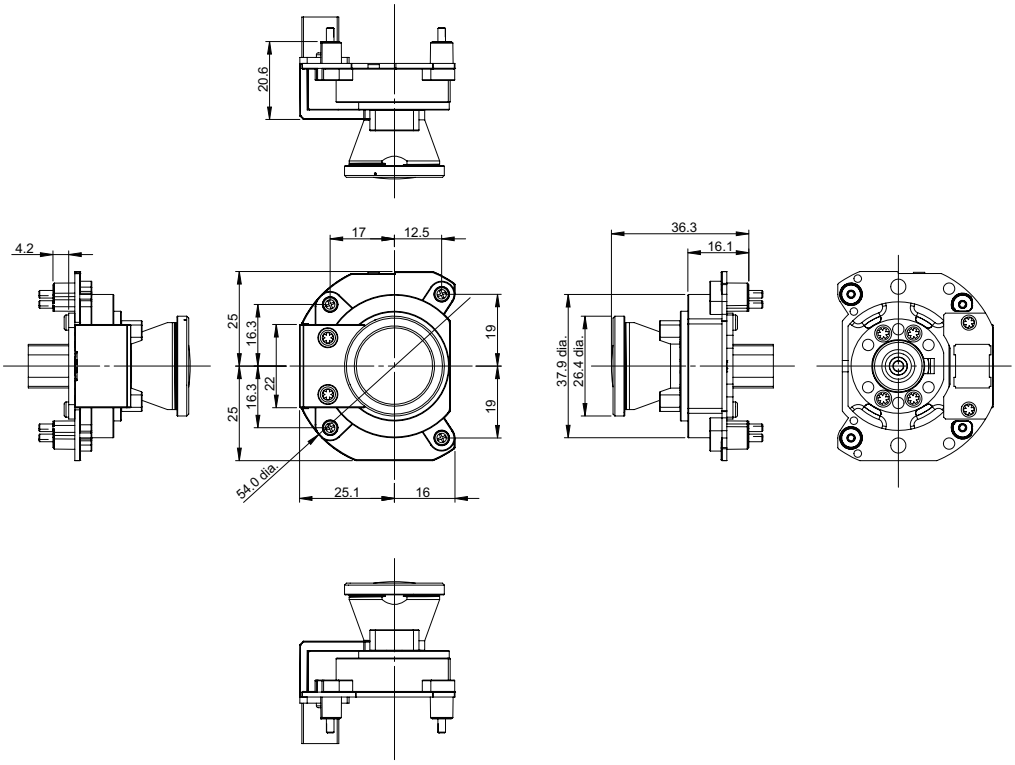

(Unit: mm)

FHV-LEM-S-□□

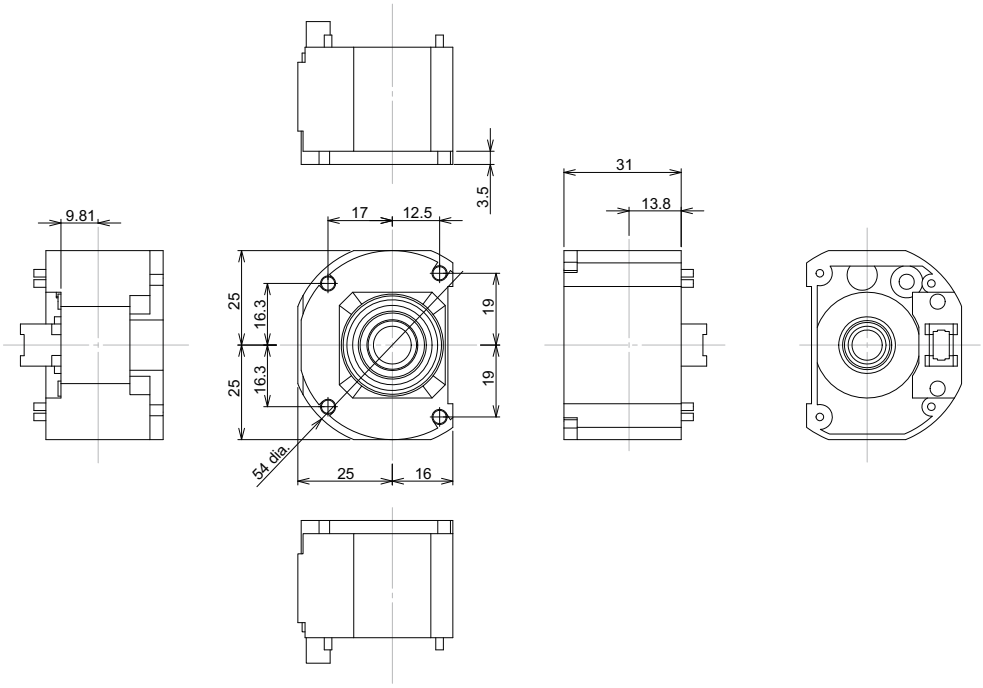

(Unit: mm)

Additional Information

We have the 2D CAD data or 3D CAD data.
You can download CAD data from www.fa.omron.co.jp.

3-4-3 Optical Chart

How to View the Optical Chart

The X axis of the optical chart shows the field of view (mm).
The Y axis of the optical chart shows the camera installation distance (mm).

FHV7□-□□□□□-S□□

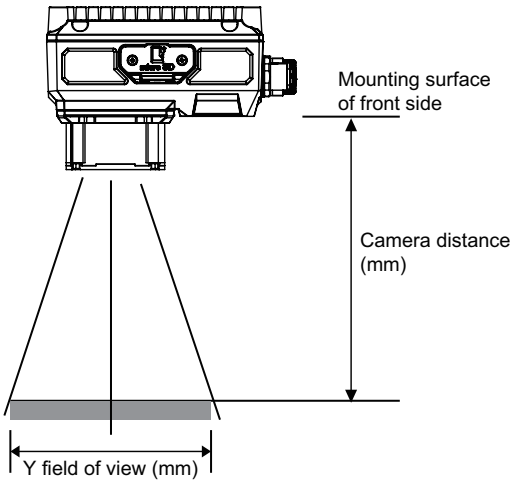

FHV7□-□□□□□-H□□

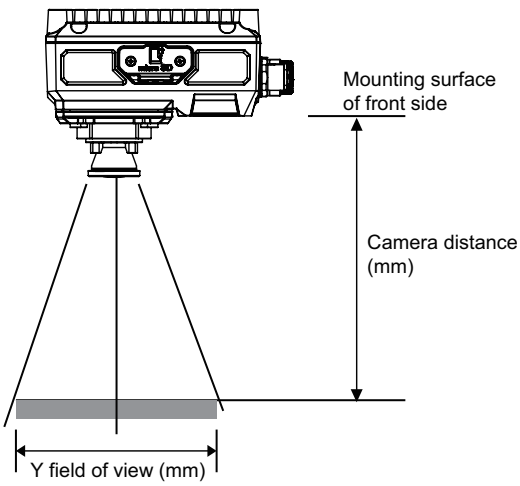

FHV7□-□□□□□-S□□-□□
FHV7□-□□□□□-H□□-□□

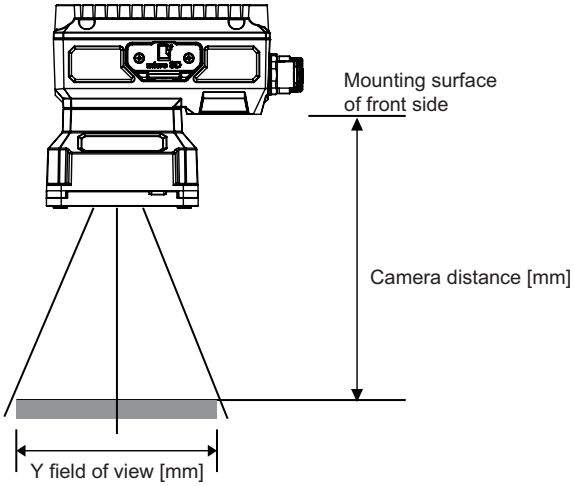

The lengths of the fields of view given in the optical charts are the lengths of the Y axis.

Precautions for Correct Use

The optical axis may vary product by product. When mounting this module, be sure to confirm the center position of the video on the monitor. The optical axis of this product may vary over a couple of pixels due to the variation of ambient temperature because of the material characteristics.

Precautions for Correct Use

Select the model by confirming the field of view and camera installation distance on the optical diagram. In addition, the field of view may vary product by product.
When mounting this product, be sure to confirm video using the monitor.

Optical Chart

● High-speed Lens Modules

- FHV7□-□004, FHV7□-□016

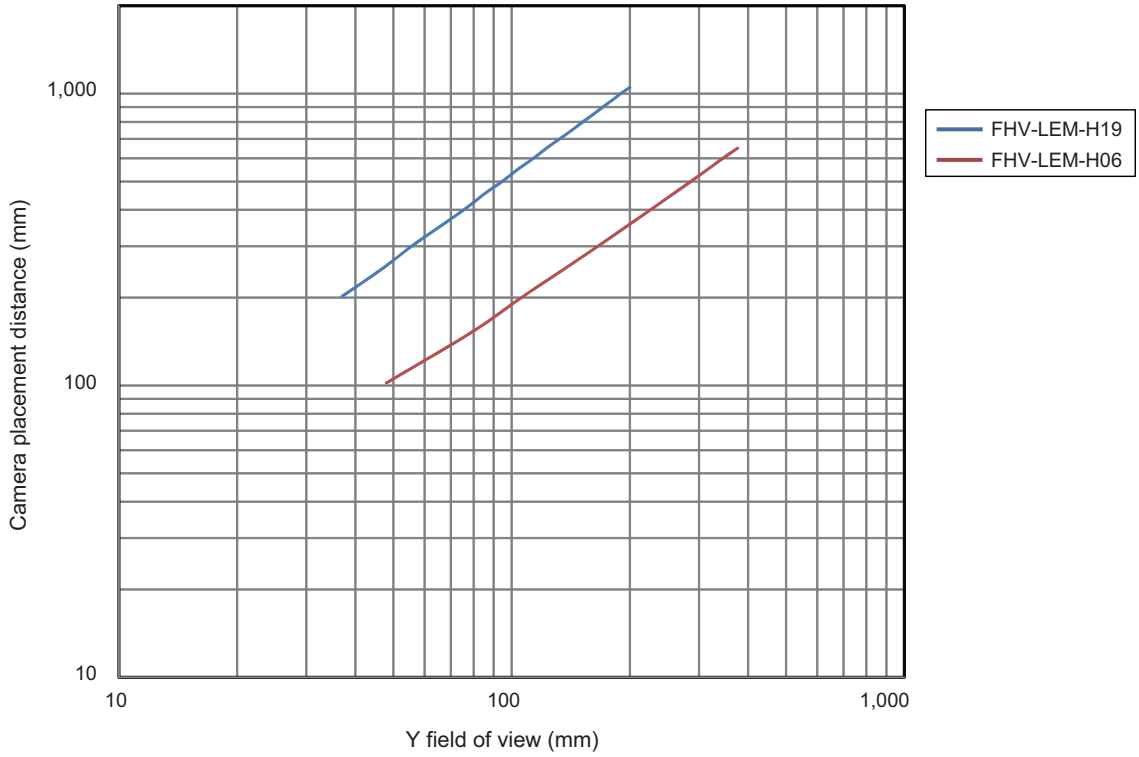

- FHV7□-□032

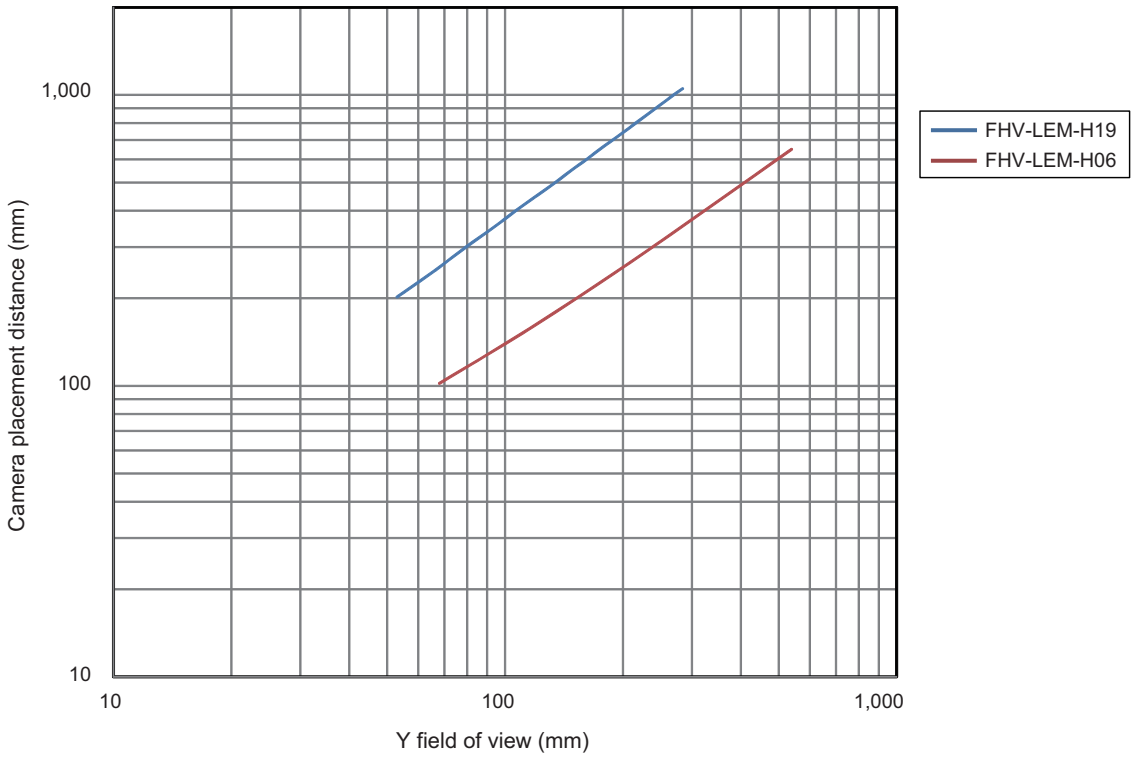

- FHV7□-□063R

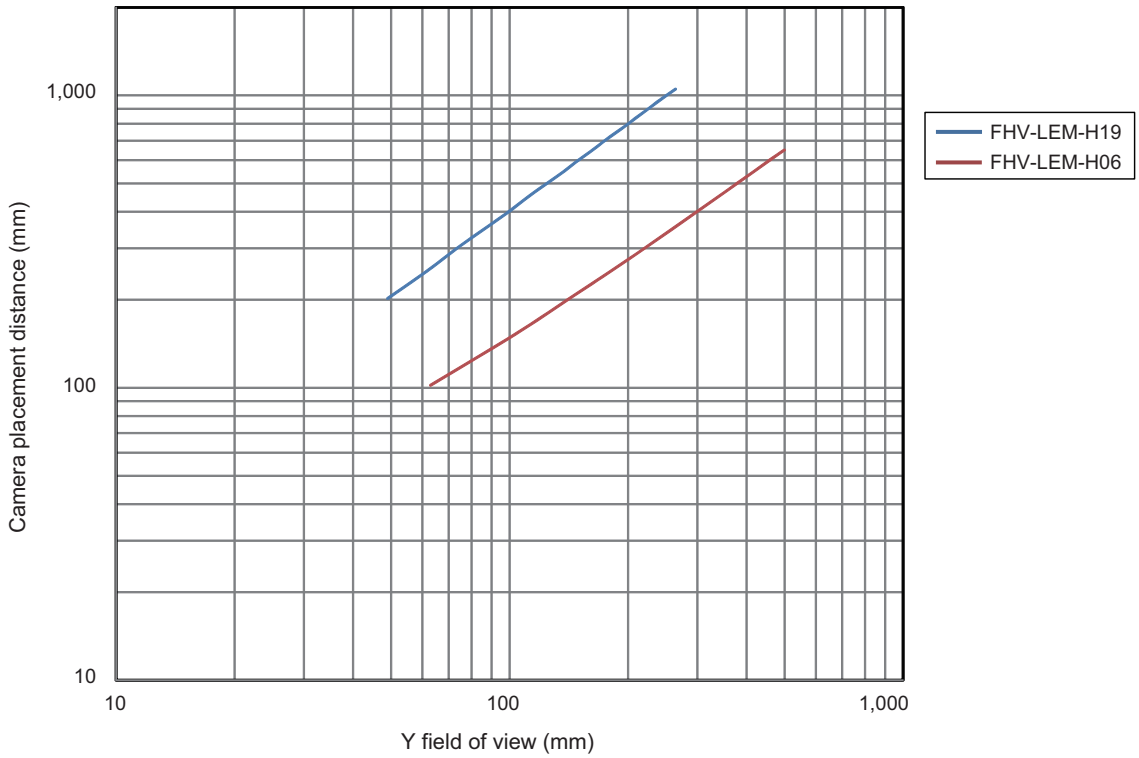

● Standard Lens Modules

- FHV7□-□004, FHV7□-□016

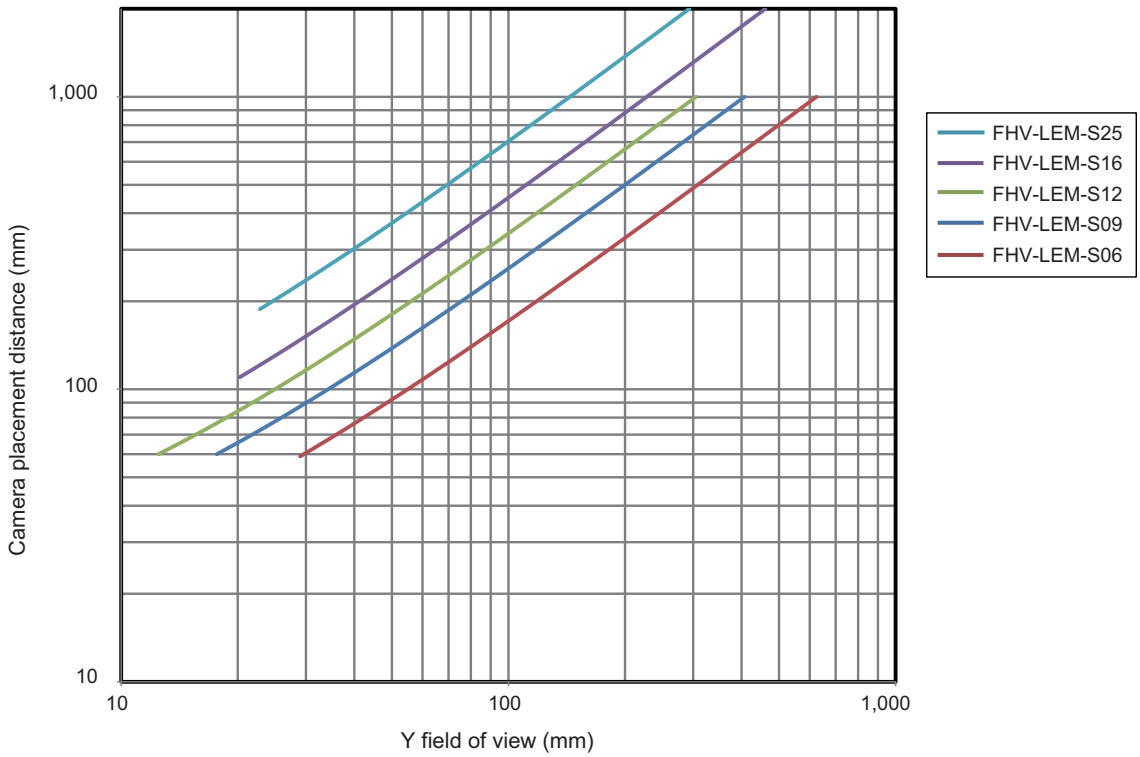

- FHV7□-□032

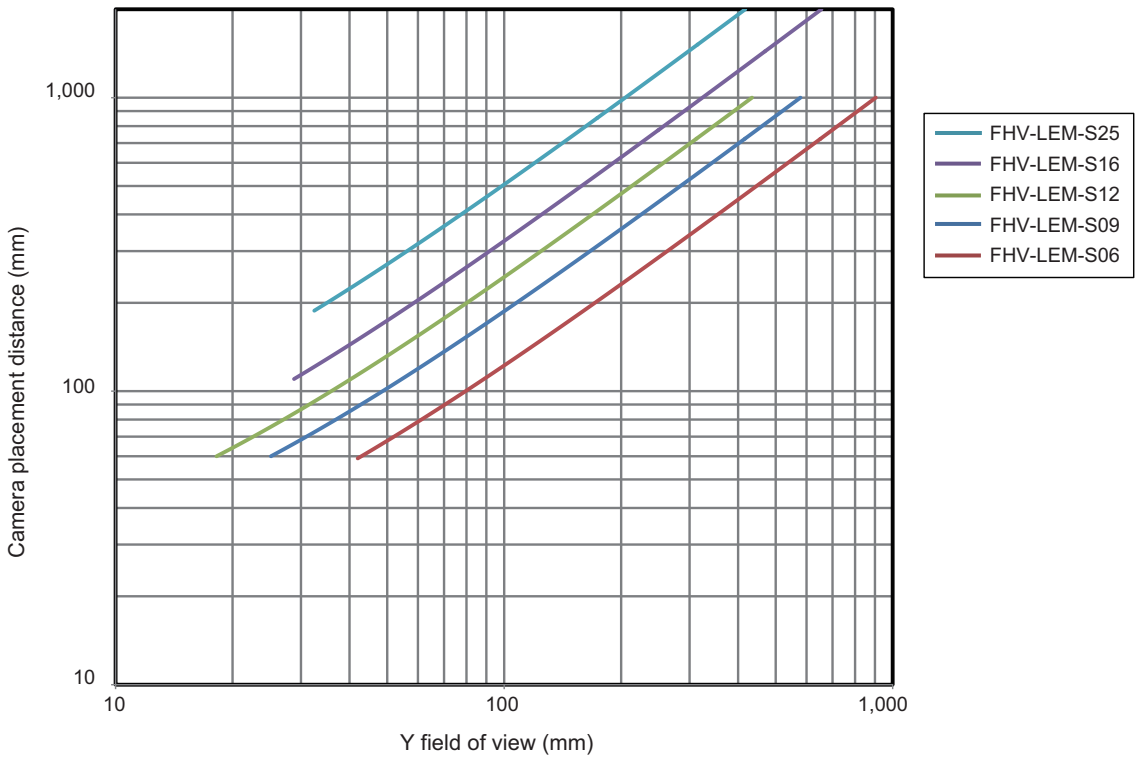

- FHV7□-□063R

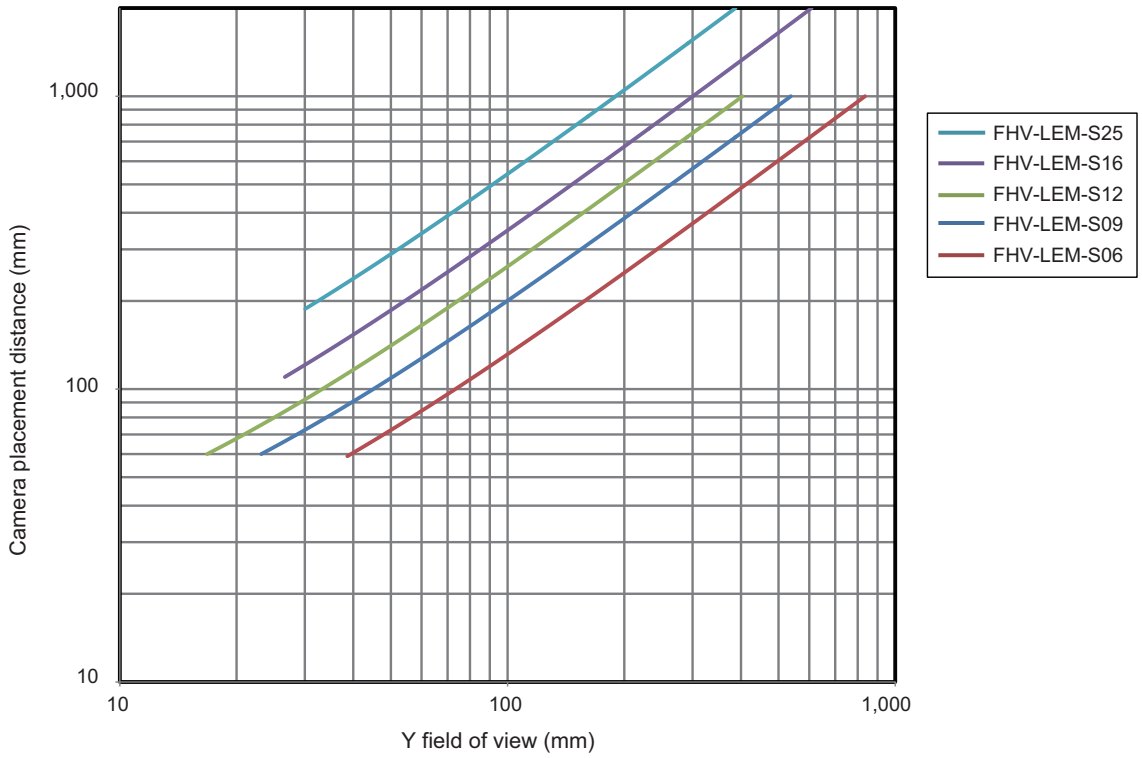
1,000
100
10
Camera placement distance (mm)
10
100
1,000
Y field of view (mm)
FHV-LEM-S25
FHV-LEM-S16
FHV-LEM-S12
FHV-LEM-S09
FHV-LEM-S06

3-5 C Mount Lenses

3-5-1 Specifications

SV-V Series

FHV7□-□004 and FHV7□-□016 are recommended.

Item	3Z4S-LE			
	SV-03514V	SV-04514V	SV-0614V	SV-0813V
Appearance/ Dimensions [mm]	29.5 dia. 30.4	29.5 dia. 29.5	29 dia. 30.0	28 dia. 34.0
Focal length [mm]	3.5	4.5	6	8
Aperture (F No.)	1.4 to Close	1.4 to Close	1.4 to Close	1.3 to Close
Filter size	-	-	M27.0 P0.5	M25.5 P0.5
Max. sensor size	1/3-inch	1/3-inch	1/3-inch	1/3-inch
Mount	C mount			

Item	3Z4S-LE			
	SV-1214V	SV-1614V	SV-2514V	SV-3518V
Appearance/ Dimensions [mm]	29 dia. 29.5	29 dia. 24.0	29 dia. 24.5	29 dia. 33.5 [WD: ∞] to 37.5 [WD: 300]
Focal length [mm]	12	16	25	35
Aperture (F No.)	1.4 to Close	1.4 to Close	1.4 to Close	1.8 to Close
Filter size	M27.0 P0.5	M27.0 P0.5	M27.0 P0.5	M27.0 P0.5
Max. sensor size	1/3-inch	1/3-inch	1/3-inch	1/3-inch
Mount	C mount			

Item	3Z4S-LE		
	SV-5018V	SV-7527V	SV-10035V
Appearance/ Dimensions [mm]	32 dia. 37.0 [WD: ∞] to 39.4 [WD: 1000]	32 dia. 42.0 [WD: ∞] to 44.4 [WD: 1000]	32 dia. 43.9 [WD: ∞] to 46.3 [WD: 1000]
Focal length [mm]	50	75	100
Aperture (F No.)	1.8 to Close	2.7 to Close	3.5 to Close
Filter size	M30.5 P0.5	M30.5 P0.5	M30.5 P0.5
Max. sensor size	1/3-inch	1/3-inch	1/3-inch
Mount	C mount		

SV-H Series

FHV7□-□032, FHV7□-□050, FHV7□-□063R, and FHV7□-□120R are recommended.

Item	3Z4S-LE			
	SV-0614H	SV-0814H	SV-1214H	SV-1614H
Appearance/ Dimensions [mm]	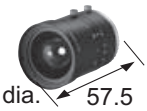 42 dia. 57.5	39 dia. 52.5	30 dia. 51.0	30 dia. 47.5
Focal length [mm]	6	8	12	16
Aperture (F No.)	1.4 to 16	1.4 to 16	1.4 to 16	1.4 to 16
Filter size	M40.5 P0.5	M35.5 P0.5	M27.0 P0.5	M27.0 P0.5
Max. sensor size	2/3-inch	2/3-inch	2/3-inch	2/3-inch
Mount	C mount			

Item	3Z4S-LE			
	SV-2514H	SV-3514H	SV-5014H	SV-7525H
Appearance/ Dimensions [mm]	30 dia. 36.0	44 dia. 45.5	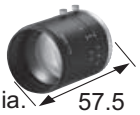 44 dia. 57.5	36 dia. 49.5 [WD:∞] to 54.6 [WD:1200]
Focal length [mm]	25	35	50	75
Aperture (F No.)	1.4 to 16	1.4 to 16	1.4 to 16	2.5 to Close
Filter size	M27.0 P0.5	M35.5 P0.5	M40.5 P0.5	M34.0 P0.5
Max. sensor size	2/3-inch	2/3-inch	2/3-inch	1-inch
Mount	C mount			

Item	3Z4S-LE
	SV-10028H
Appearance/ Dimensions [mm]	39 dia. 66.5 [WD:∞] to 71.6 [WD:2000]
Focal length [mm]	100
Aperture (F No.)	2.8 to Close
Filter size	M37.5 P0.5
Max. sensor size	1-inch
Mount	C mount

Vibration/Shock-resistance Lens VS-MCA Series for C Mount Camera

FHV7□-□004, FHV7□-□016, FHV7□-□032, FHV7□-□050, FHV7□-□063R, and FHV7□-□120R are recommended.

Item	3Z4S-LE VS-MCA4-□□□□*1								
Appearance/ Dimensions [mm]	31 dia. 29.0 [0.01x] to 29.2 [0.04x]								
Focal length [mm]	4 mm								
Filter size	M27.0 P0.5								
Optical magnification	0.01x			0.02x			0.04x		
Aperture (fixed F No.)	2	5.6	8	2	5.6	8	2	5.6	8
Depth of field [mm]*2	1680.0	4560.0	6480.0	420.0	1140.0	1640.0	105.0	290.0	415.0
Maximum sensor size	1/2-inch								
Mount	C mount								

Item	3Z4S-LE VS-MCA6.5-□□□□*1								
Appearance/ Dimensions [mm]	31 dia. 23.1 [0.01x] to 23.4 [0.06x]								
Focal length [mm]	6.5 mm								
Filter size	M27.0 P0.5								
Optical magnification	0.01x			0.03x			0.06x		
Aperture (fixed F No.)	2	5.6	8	2	5.6	8	2	5.6	8
Depth of field [mm]*2	1840.0	4560.0	6480.0	204.4	515.6	728.9	51.1	131.1	188.9
Maximum sensor size	1/2-inch								
Mount	C mount								

Item	3Z4S-LE VS-MCA10-□□□□*1								
Appearance/ Dimensions [mm]	31 dia. 24.2 [0.02x] to 25.5 [0.15x]								
Focal length [mm]	10 mm								
Filter size	M27.0 P0.5								
Optical magnification	0.02x			0.10x			0.15x		
Aperture (fixed F No.)	2	5.6	8	2	5.6	8	2	5.6	8
Depth of field [mm]*2	460.0	1140.0	1640.0	19.2	49.6	70.4	9.2	22.8	32.7
Maximum sensor size	1/2-inch								
Mount	C mount								

Item	3Z4S-LE VS-MCA15-□□□□*1								
Appearance/ Dimensions [mm]	31 dia. 27.9 [0.03x] to 32.0 [0.30x]								
Focal length [mm]	15 mm								
Filter size	M27.0 P0.5								
Optical magnification	0.03x			0.20x			0.30x		
Aperture (fixed F No.)	2	5.6	8	2	5.6	8	2	5.6	8
Depth of field [mm]*2	186.7	515.6	728.9	4.8	13.4	19.2	2.3	6.5	9.2
Maximum sensor size	2/3-inch								
Mount	C mount								

Item	3Z4S-LE VS-MCA20-□□□□*1								
Appearance/ Dimensions [mm]	31 dia. 24.5 [0.04x] to 32.0 [0.40x]								
Focal length [mm]	20 mm								
Filter size	M27.0 P0.5								
Optical magnification	0.04x			0.25x			0.40x		
Aperture (fixed F No.)	2	5.6	8	2	5.6	8	2	5.6	8
Depth of field [mm]*2	105.0	290.0	415.0	3.2	9.0	12.8	1.5	3.9	5.6
Maximum sensor size	2/3-inch								
Mount	C mount								

Item	3Z4S-LE VS-MCA25-□□□□*1								
Appearance/ Dimensions [mm]	31 dia. 27.0 [0.05x] to 38.5 [0.50x]								
Focal length [mm]	25 mm								
Filter size	M27.0 P0.5								
Optical magnification	0.05x			0.25x			0.50x		
Aperture (fixed F No.)	2	5.6	8	2	5.6	8	2	5.6	8
Depth of field [mm]*2	67.2	188.8	268.8	3.2	9.0	12.8	1.0	2.7	3.8
Maximum sensor size	2/3-inch								
Mount	C mount								

Item	3Z4S-LE VS-MCA30-□□□□*1								
Appearance/ Dimensions [mm]	31 dia. 24.5 [0.06x] to 36.2 [0.45x]								
Focal length [mm]	30 mm								
Filter size	M27.0 P0.5								
Optical magnification	0.06x			0.15x			0.45x		
Aperture (fixed F No.)	2	5.6	8	2	5.6	8	2	5.6	8
Depth of field [mm]*2	53.3	131.1	188.9	8.2	22.8	32.7	1.3	3.2	4.6
Maximum sensor size	2/3-inch								
Mount	C mount								

Item	3Z4S-LE VS-MCA35-□□□□*1								
Appearance/ Dimensions [mm]	31 dia. 32.0 [0.26x] to 45.7 [0.65x]								
Focal length [mm]	35 mm								
Filter size	M27.0 P0.5								
Optical magnification	0.26x			0.30x			0.65x		
Aperture (fixed F No.)	2	5.6	8	2	5.6	8	2	5.6	8
Depth of field [mm]*2	3.0	8.4	12.0	2.2	6.5	9.2	0.7	1.7	2.5
Maximum sensor size	2/3-inch								
Mount	C mount								

Item	3Z4S-LE VS-MCA50-□□□□*1								
Appearance/ Dimensions [mm]	31 dia. 44.0 [0.08x] to 63.4 [0.48x]								
Focal length [mm]	50 mm								
Filter size	M27.0 P0.5								
Optical magnification	0.08x			0.20x			0.48x		
Aperture (fixed F No.)	2	5.6	8	2	5.6	8	2	5.6	8
Depth of field [mm]*2	32.5	75.0	107.5	6.0	13.4	19.2	1.3	2.9	4.1
Maximum sensor size	2/3-inch								
Mount	C mount								

Item	3Z4S-LE VS-MCA75-□□□□*1								
Appearance/ Dimensions [mm]	31 dia. 70.0 [0.14x] to 105.5 [0.62x]								
Focal length [mm]	75 mm								
Filter size	M27.0 P0.5								
Optical magnification	0.14x			0.20x			0.62x		
Aperture (fixed F No.)	2	5.6	8	2	5.6	8	2	5.6	8
Depth of field [mm]*2	16.7	28.6	41.2	9.2	13.4	19.2	1.3	2.5	3.6
Maximum sensor size	2/3-inch								
Mount	C mount								

*1. Insert the aperture into □□□□ in the model number as follows.
F=2: Blank
F=5: F5.6
F=8: F8

*2. When an allowable diameter of confusion circle is 0.04 mm

High-resolution Telecentric Lens VS-TCH Series for C Mount Lens for 2/3-inch Image Sensor

FHV7□-□004, FHV7□-□016, FHV7□-□032, FHV7□-□050, FHV7□-□063R, and FHV7□-□120R are recommended.

Item			3Z4S-LE VS-TCH05		3Z4S-LE VS-TCH1	
			-65□□□□	-110□□□□	-65□□□□	-110□□□□
Optical magnification (±5%)			0.5×		1.0×	
Field of view (±5%) (VxH) [mm]	FHV7□-□004/-□016	1/2.9-inch equivalent	9.9×7.5		5.0×3.7	
	FHV7□-□032	1/1.8-inch equivalent	14.1×10.6		7.1×5.3	
	FHV7□-□063R	1/1.8-inch equivalent	14.8×9.8		7.4×4.9	
	FHV7□-□120R	1/1.7-inch equivalent	14.8×11.1		7.4×5.6	
	FHV7H□-□50	2/3-inch equivalent	16.9×14.1		8.5×7.1	
WD [mm]*2			75.3	110.8	68.8	110.3
Effective F No.			9.42	9.49	9.94	10.49
Depth of field [mm]*3			3	3.04	0.8	0.84
Resolution [μm]*4			12.43	12.9	6.71	6.99
TV distortion			0.02%	0.02%	0.01%	0.02%
Max. sensor size			2/3-inch			

Item			3Z4S-LE VS-TCH1.5		3Z4S-LE VS-TCH2	
			-65□□□□	-110□□□□	-65□□□□	-110□□□□
Optical magnification (±5%)			1.5×		2.0×	
Field of view (±5%) (VxH) [mm]	FHV7□-□004/-□016	1/2.9-inch equivalent	3.3×2.5		2.5×1.9	
	FHV7□-□032	1/1.8-inch equivalent	4.7×3.5		3.5×2.7	
	FHV7□-□063R	1/1.8-inch equivalent	4.9×3.3		3.7×2.5	
	FHV7□-□120R	1/1.7-inch equivalent	4.9×3.7		3.7×2.8	
	FHV7□-□50	2/3-inch equivalent	5.6×4.7		4.2×3.5	
WD [mm]*2			65	110.8	65	110.8
Effective F No.			11.8	11.97	13.6	13.5
Depth of field [mm]*3			0.4	0.43	0.3	0.27
Resolution [μm]*4			5.24	5.33	4.53	4.53
TV distortion			0.01%	0.02%	0.03%	0.03%
Max. sensor size			2/3-inch			

Item			3Z4S-LE VS-TCH4	
			-65□□□□	-110□□□□
Optical magnification (±5%)			4.0×	
Field of view (±5%) (VxH) [mm]	FHV7□-□004/-□016	1/2.9-inch equivalent	1.4×0.9	
	FHV7□-□032	1/1.8-inch equivalent	1.8×1.3	
	FHV7□-□063R	1/1.8-inch equivalent	1.8×1.2	
	FHV7□-□120R	1/1.7-inch equivalent	1.9×1.4	
	FHV7□-□50	2/3-inch equivalent	2.1×1.8	
WD [mm]*2			65	110.8
Effective F No.			17.91	22.2
Depth of field [mm]*3			0.09	0.11
Resolution [μm]*4			3	3.73
TV distortion			0.02%	0.03%
Max. sensor size			2/3-inch	

*1. Insert the shape into □□□□ in the model number as follows.
Straight: -O
Coaxial: CO-O
*2. The working distance is from the end of the lens to the sensor.
*3. The depth of field is calculated using a allowable diameter of confusion circle of 0.04 mm.
*4. The resolution is calculated using a wavelength of 550 nm.

Note:

1. Fixing the lens or other reinforcement may be required depending on the installation angle or operating environment (vibration/shock).
   When fixing the lens, insulate the lens from the fixture.
2. The above specifications are values calculated from the optical design and can vary depending on installation conditions.

Non-telecentric Macro Lens VS-MC Series for C Mount Camera

Item			3Z4S-LE VS			
			-MC01-330	-MC03-180	-MC05-130	-MC1-80
Optical magnification (±5%)			0.1x	0.3x	0.5x	1.0x
Field of view (±5%) (VxH) [mm]	FHV7□-□004/-□016	1/2.9-inch equivalent	49.7x37.3	16.6x12.4	9.9x7.5	5.0x3.7
	FHV7□-□032	1/1.8-inch equivalent	70.7x53.0	23.6x17.7	14.1x10.6	7.1x5.3
	FHV7□-□063R	1/1.8-inch equivalent	73.7x49.2	24.6x16.4	14.8x9.8	7.4x4.9
	FHV7□-□120R	1/1.7-inch equivalent	74.0x55.5	24.7x18.5	14.8x11.1	7.4x5.6
	FHV7□-□050	2/3-inch equivalent	84.5x70.7	28.2x23.6	16.9x14.1	8.5x7.1
WD [mm]*1			325.5	184.8	126.3	82.4
Effective F No.			4.43	5.29	6.10	8.14
Resolution [μm]*2			30.5	11.6	8.2	5.5
Depth of field [mm]*3			35.4	4.7	2.0	0.7
TV distortion			0.01% or less	0.00% or less	0.00% or less	0.00% or less

*1. The working distance is from the end of the lens to the sensor.
*2. The resolution is calculated using a wavelength of 550 nm.
*3. The depth of field is calculated using an allowable diameter of confusion circle of 0.04 mm.

3-5-2 Meaning of Optical Chart

How to View the Optical Chart

The X axis of the optical chart shows the field of view [mm].
The Y axis of the optical chart shows the camera installation distance [mm] or WD.

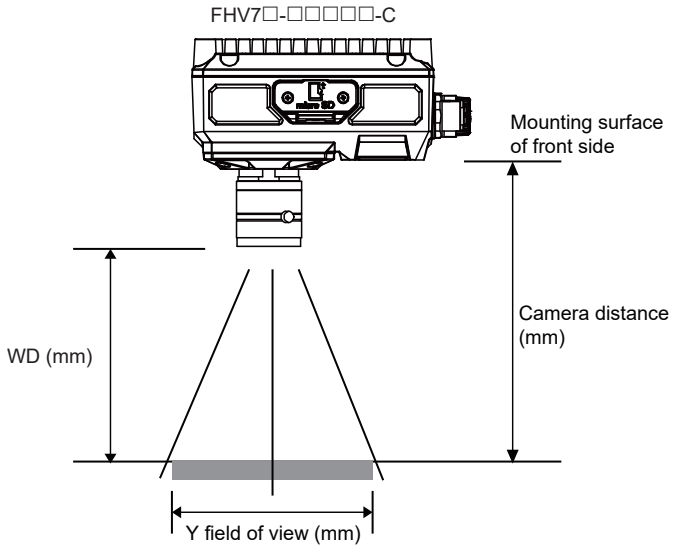

The lengths of the fields of view given in the optical charts are the lengths of the Y axis.

Precautions for Correct Use

The optical axis may vary product by product. When mounting this module, be sure to confirm the center position of the video on the monitor.

Precautions for Correct Use

Select the model by confirming the field of view and camera installation distance on the optical chart. In addition, the field of view may vary product by product.
When mounting this product, be sure to confirm video using the monitor.

Optical Chart

● Normal Lenses

a. Smart camera: FHV7□-□004, FHV7□-□016 (for 3Z4S-LE SV-V series)

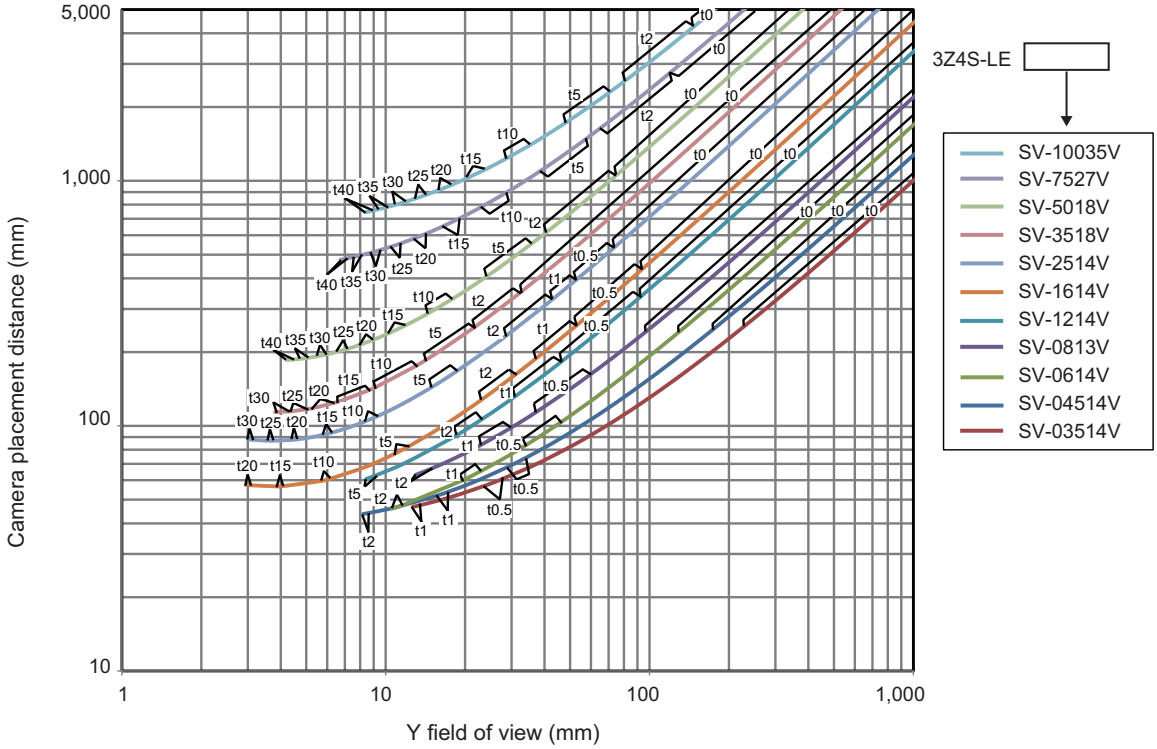

b. Smart camera: FHV7□-□004, FHV7□-□016 (for 3Z4S-LE SV-H series)

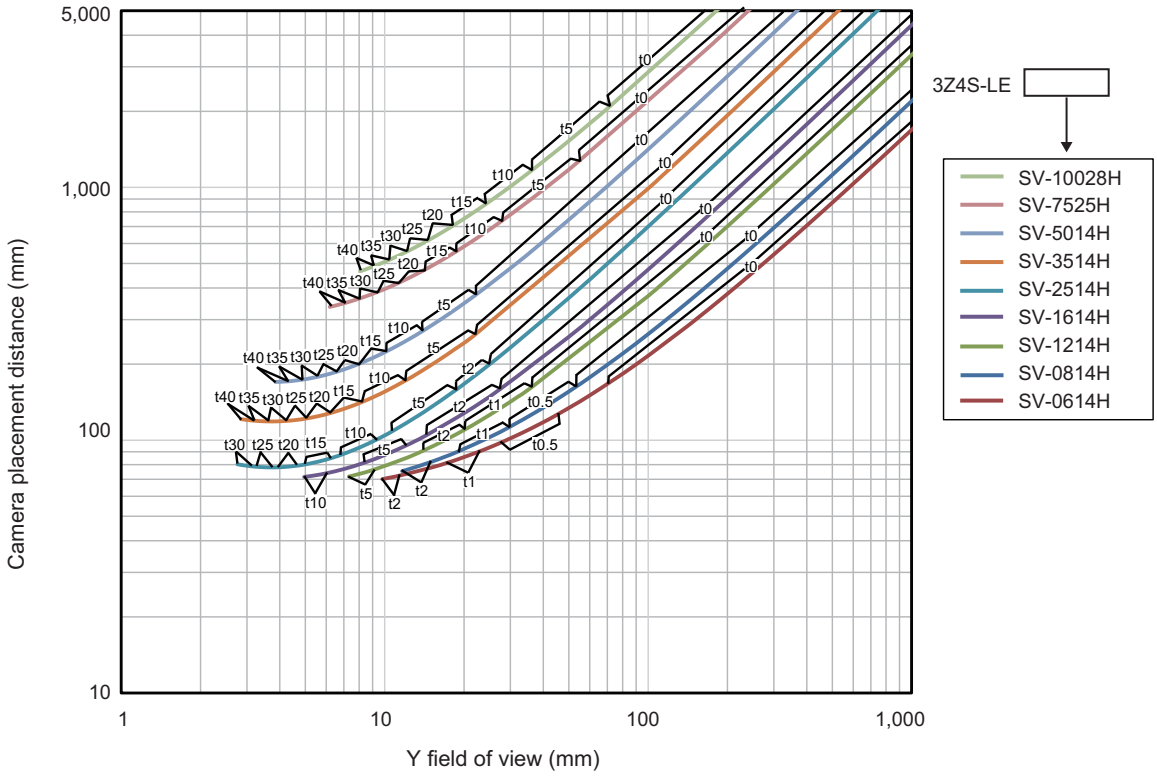

c. Smart camera: FHV7□-□032 (for 3Z4S-LE SV-H series)

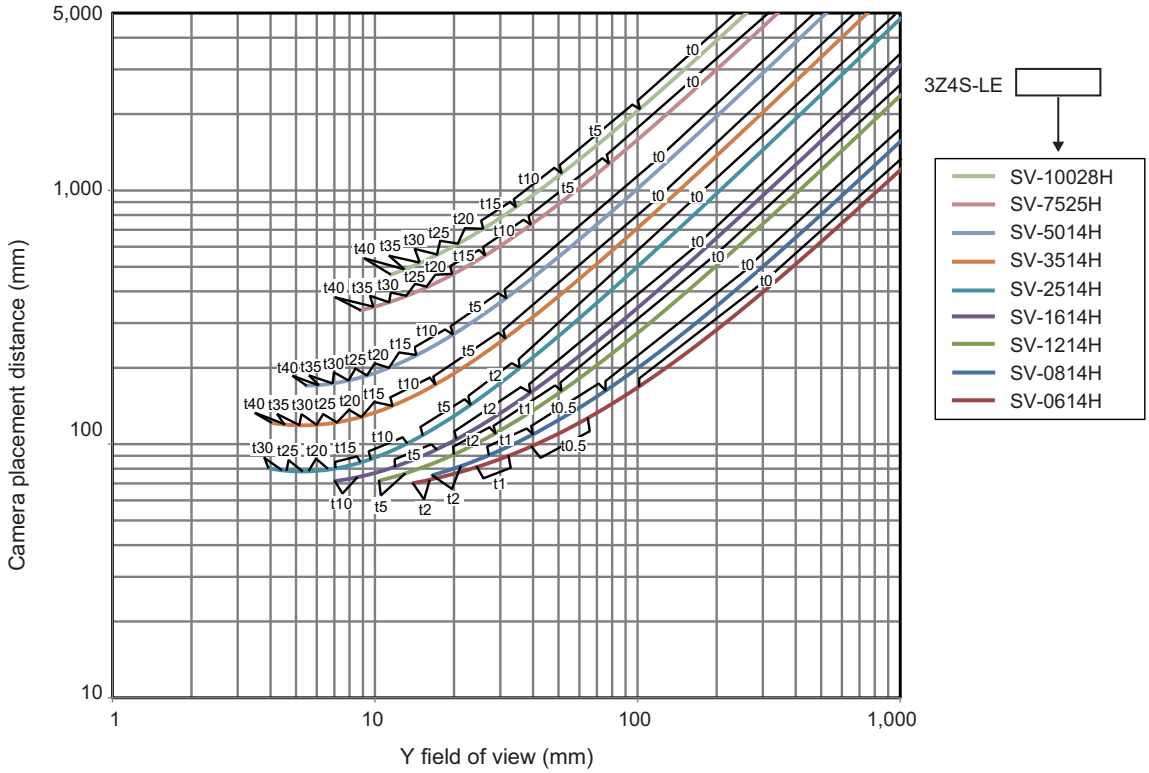

d. Smart camera: FHV7□-□050 (for 3Z4S-LE SV-H series)

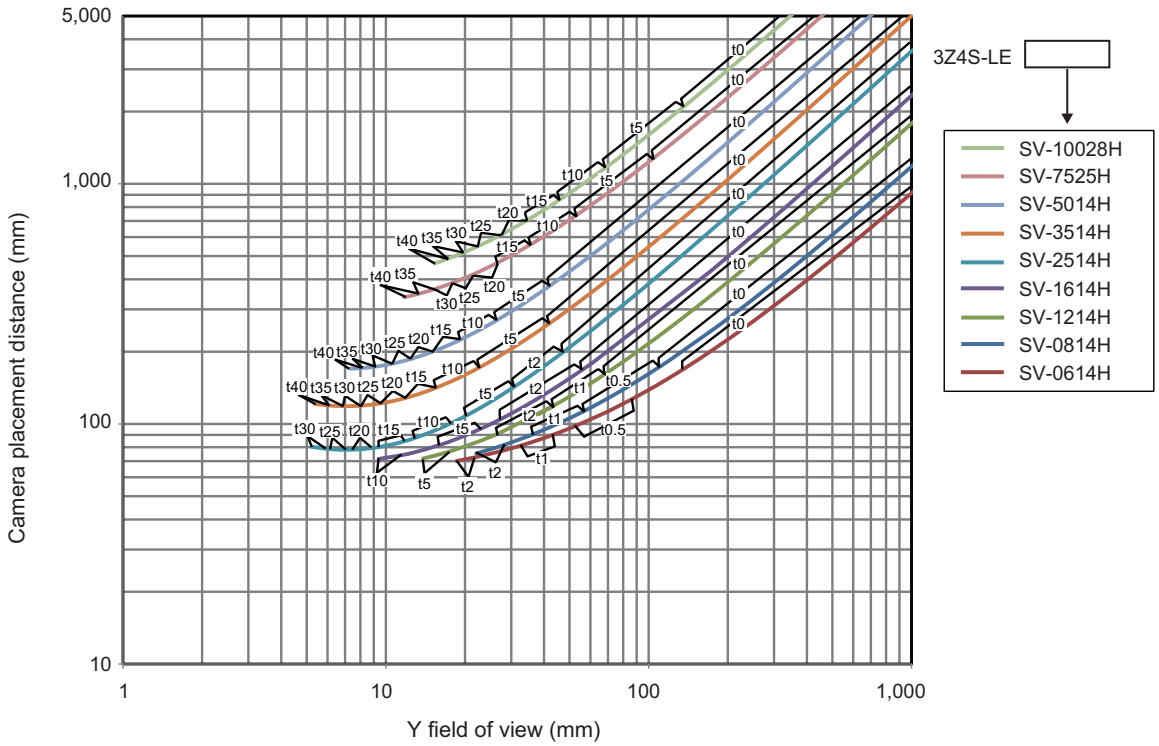

e. Smart camera: FHV7□-□063R (for 3Z4S-LE SV-H series)

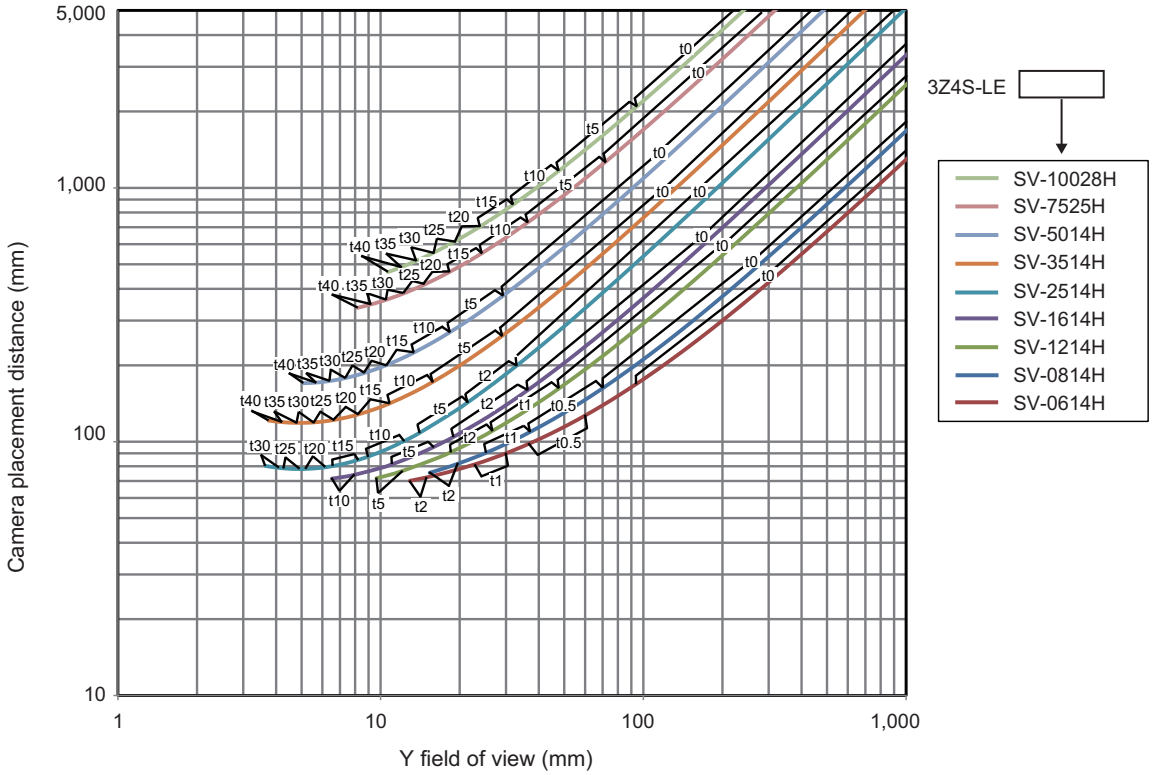

f. Smart camera: FHV7□-□120R (for 3Z4S-LE SV-H series)

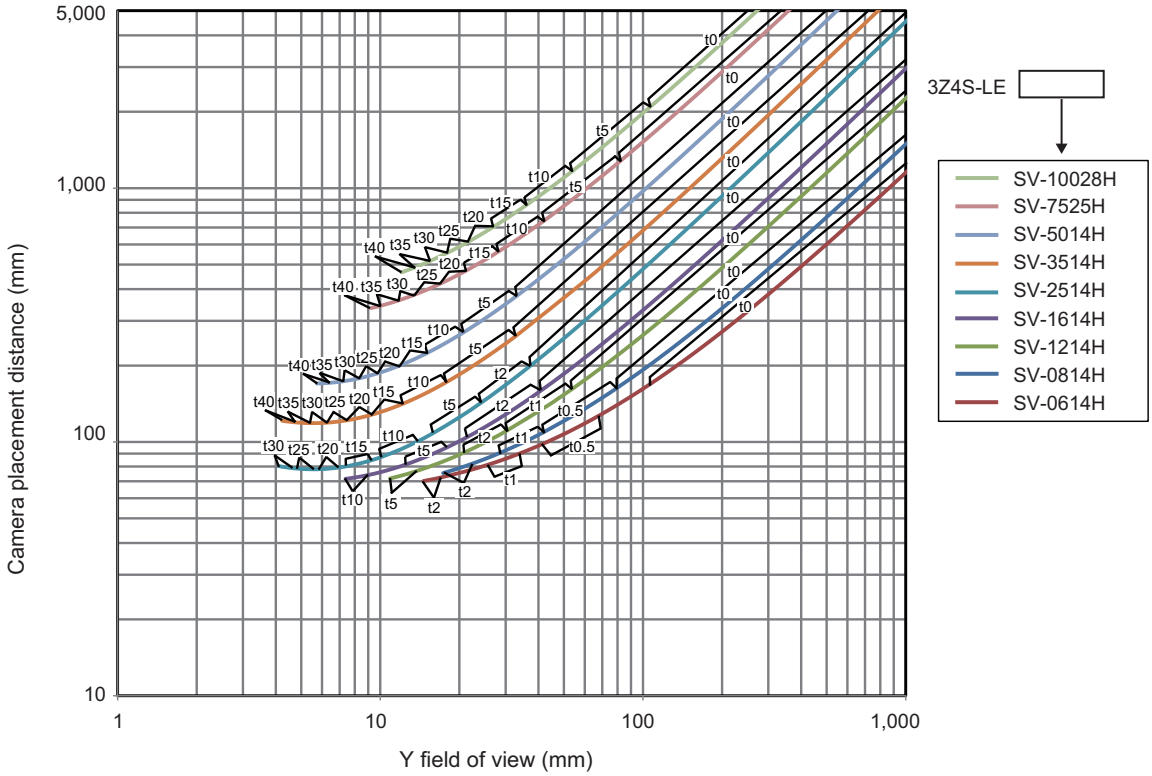

● Vibration / Shock-resistance Lens

a. Smart Camera: FHV7□-□004, FHV7□-□016 (for 3Z4S-LE VS-MCA series)

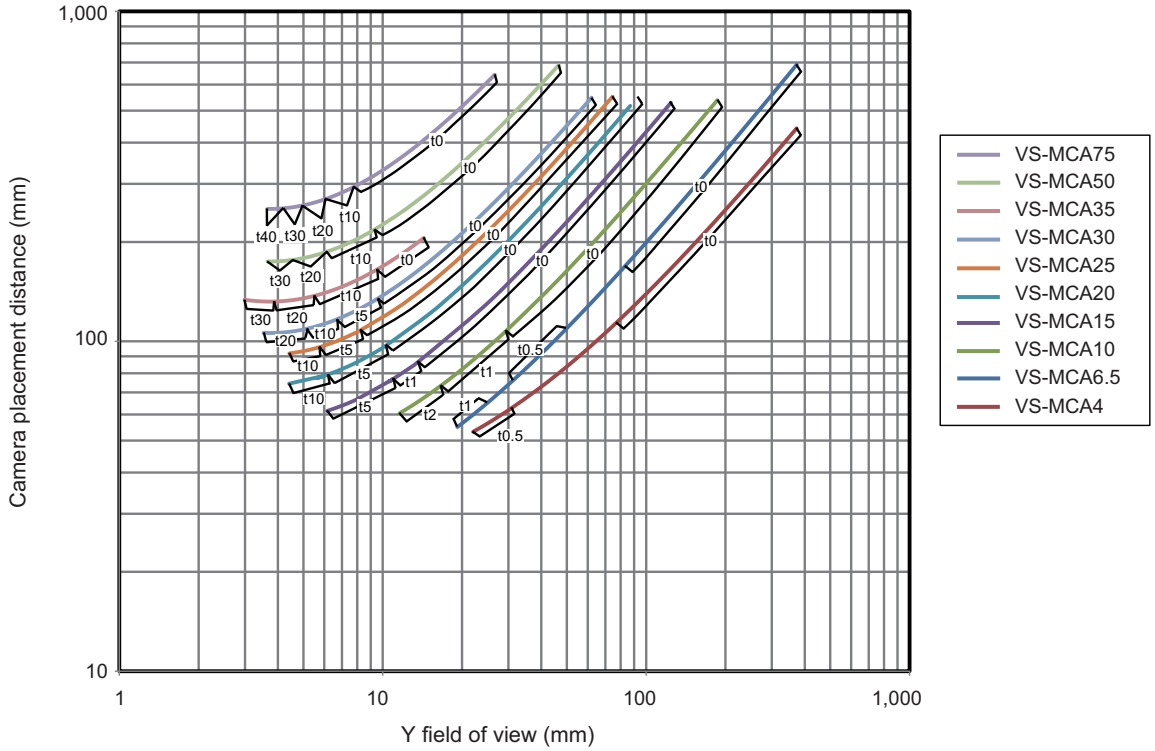

b. Smart camera: FHV7□-□032 (for 3Z4S-LE VS-MCA series)

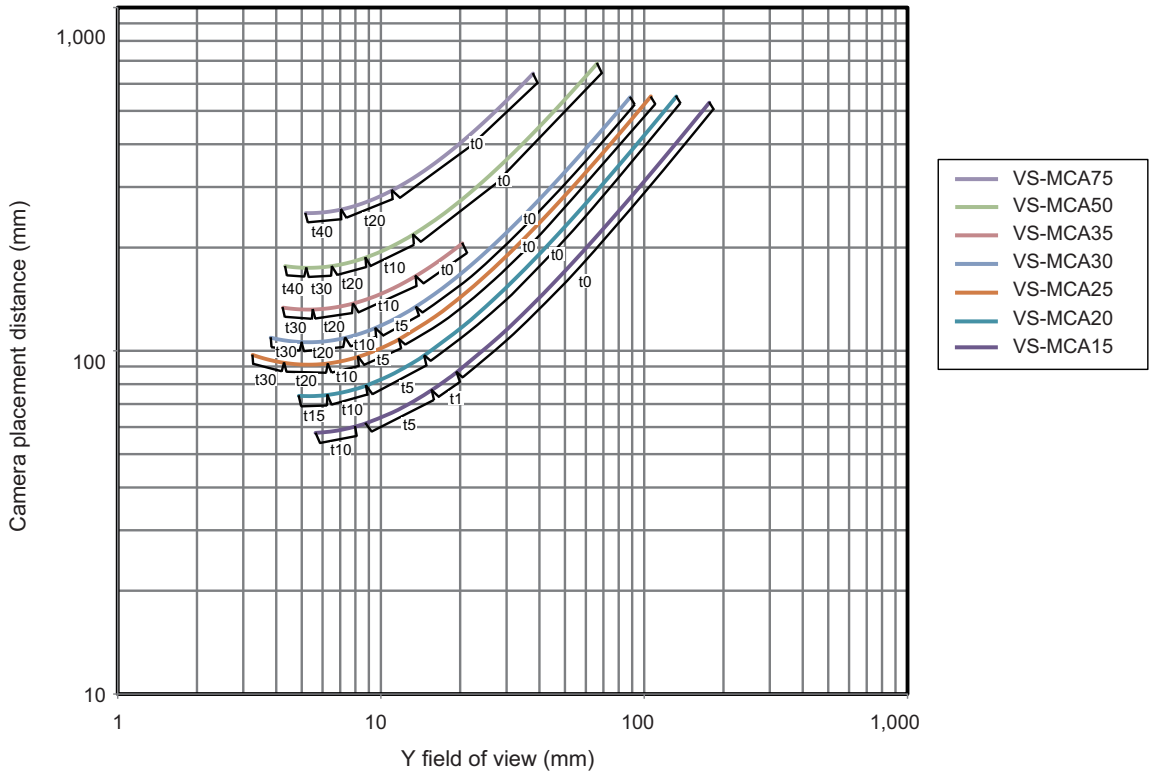

c. Smart camera: FHV7□-□050 (for 3Z4S-LE VS-MCA series)□

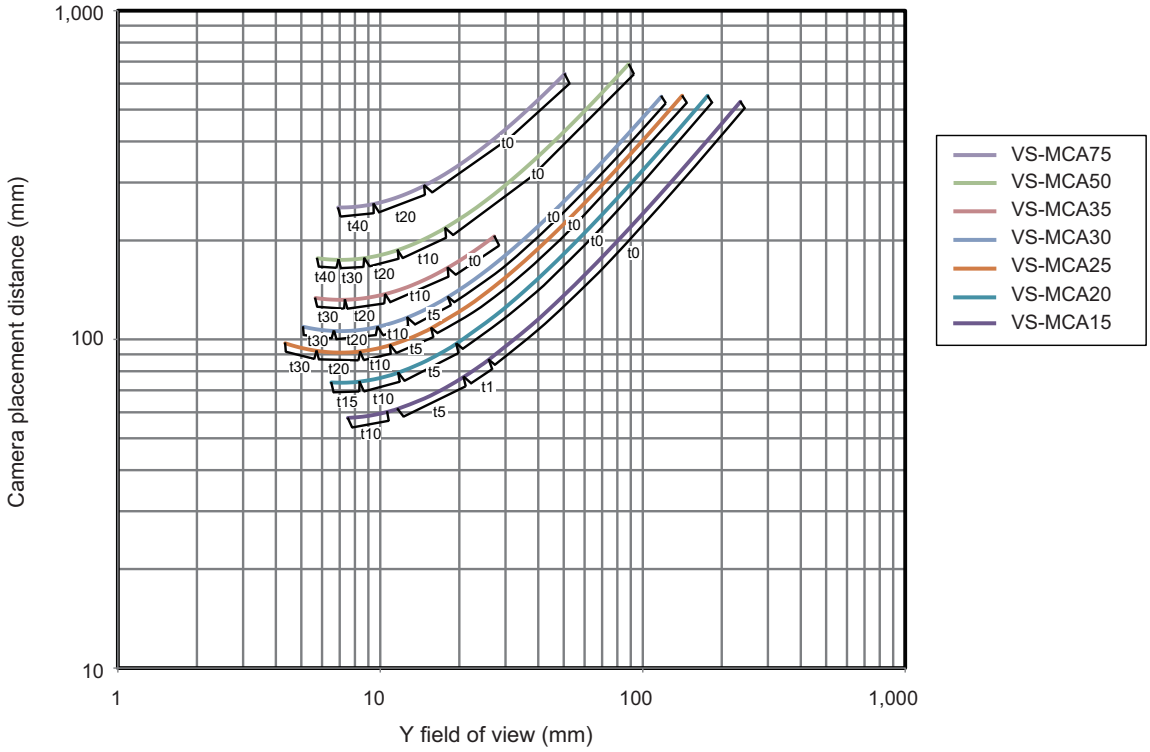

d. Smart camera: FHV7□-□063R (for 3Z4S-LE VS-MCA series)

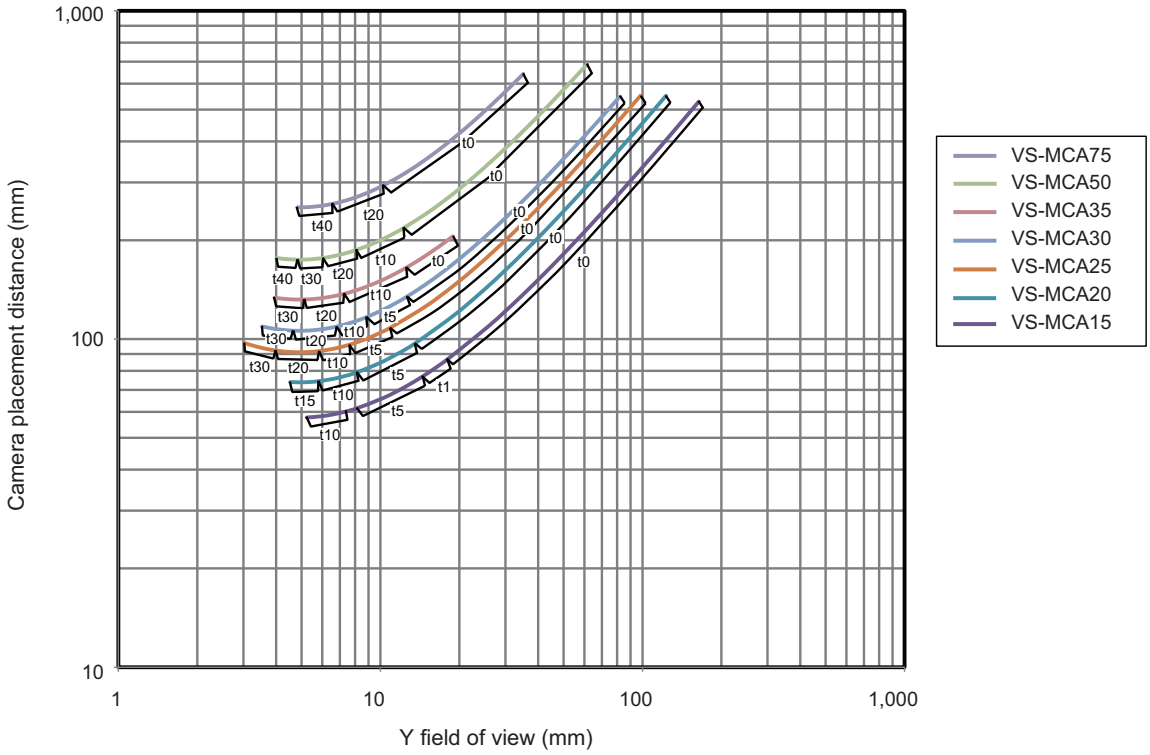

e. Smart camera: FHV7□-□120R (for 3Z4S-LE VS-MCA series)

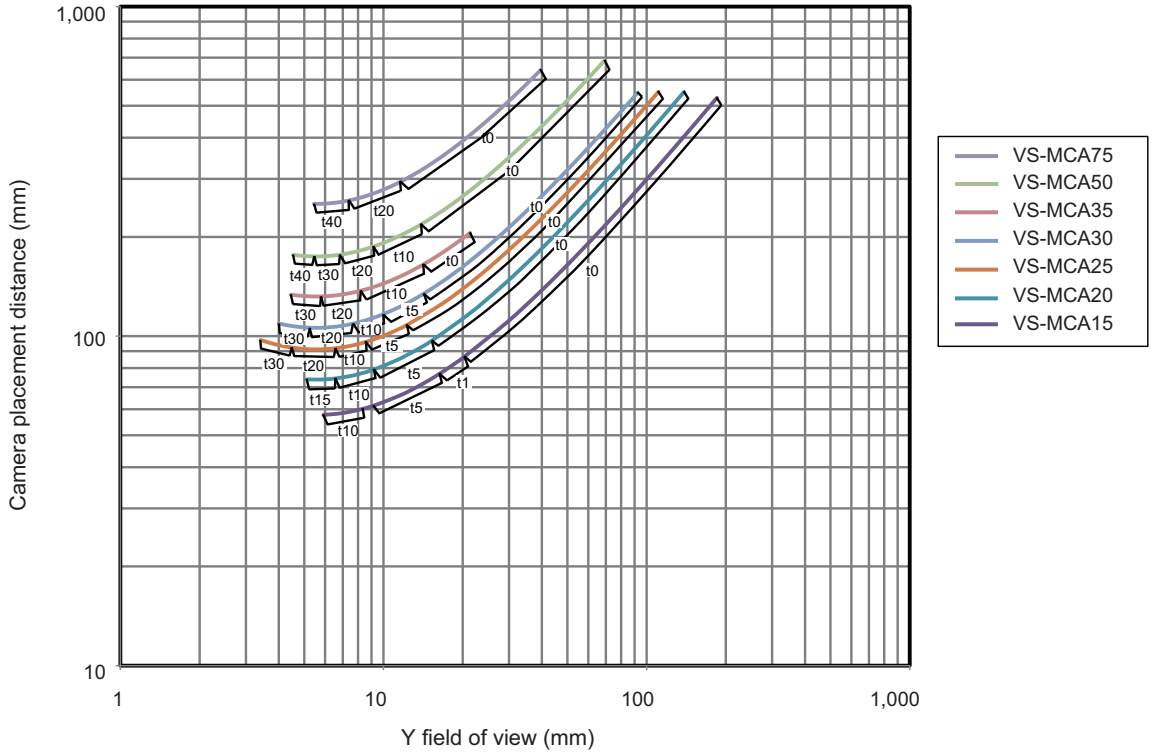

3-6 Lighting Modules

3-6-1 Specifications

Item		FHV-LTM-W	FHV-LTM-R	FHV-LTM-IR	FHV-LTM-MC
Color		White	Red	Infrared light	Multi color
Peak wave length		-	Typ. 630 nm	Typ. 850 nm	R: Typ. 630 nm G: Typ. 525 nm B: Typ. 465 nm IR: Typ. 850 nm
Light source		LED			
IEC62471 LED safety		Exempt group	Exempt group	Exempt group	R: Exempt group G: Exempt group B: Exempt group IR: Risk group 1
GB/T 30117.1-2024 LED safety		Exempt group	Exempt group	Exempt group	R: Exempt group G: Exempt group B: Exempt group IR: Risk group 1 • Wavelength: 850 nm • Radiant power: 15 mW • Continuous illumination
Usage environment	Ambient temperature range	Operating: 0 to +40°C, Storage: -25 to +65°C (with no icing or condensation)			
	Ambient humidity range	Operating & Storage: 35 to 85% (with no condensation)			
	Ambient atmosphere	No corrosive gases			
	Vibration tolerance	Oscillation frequency: 10 to 150Hz, Half amplitude: 0.35 mm, Vibration direction: X/Y/Z, Sweep time: 8 minutes/count, Sweep count: 10 times			
	Shock resistance	Impact force: 150 m/s^2, Test direction: 6 directions, three time each (up/down, front/behind, left/right)			
Dimensions		52 mm × 91 mm × 77 mm (HxWxD)			
Weight		270 g	270 g	270 g	270 g
Material		Aluminum die-casting (ADC12), polycarbonate			
Accessories		• Waterproof packing (small) FHV-XWP-CAM:1 • Waterproof packing (large) FHV-XWP-LTM: 1 • Light shielding sheet FHV-XLS-LTM: 1 • Lighting cover FHV-XCV: 1 • Hexagonal wrench (length: 60 mm): 1 • Instruction sheet: 1 • Compliance sheet: 1			

3-6-2 Dimensions

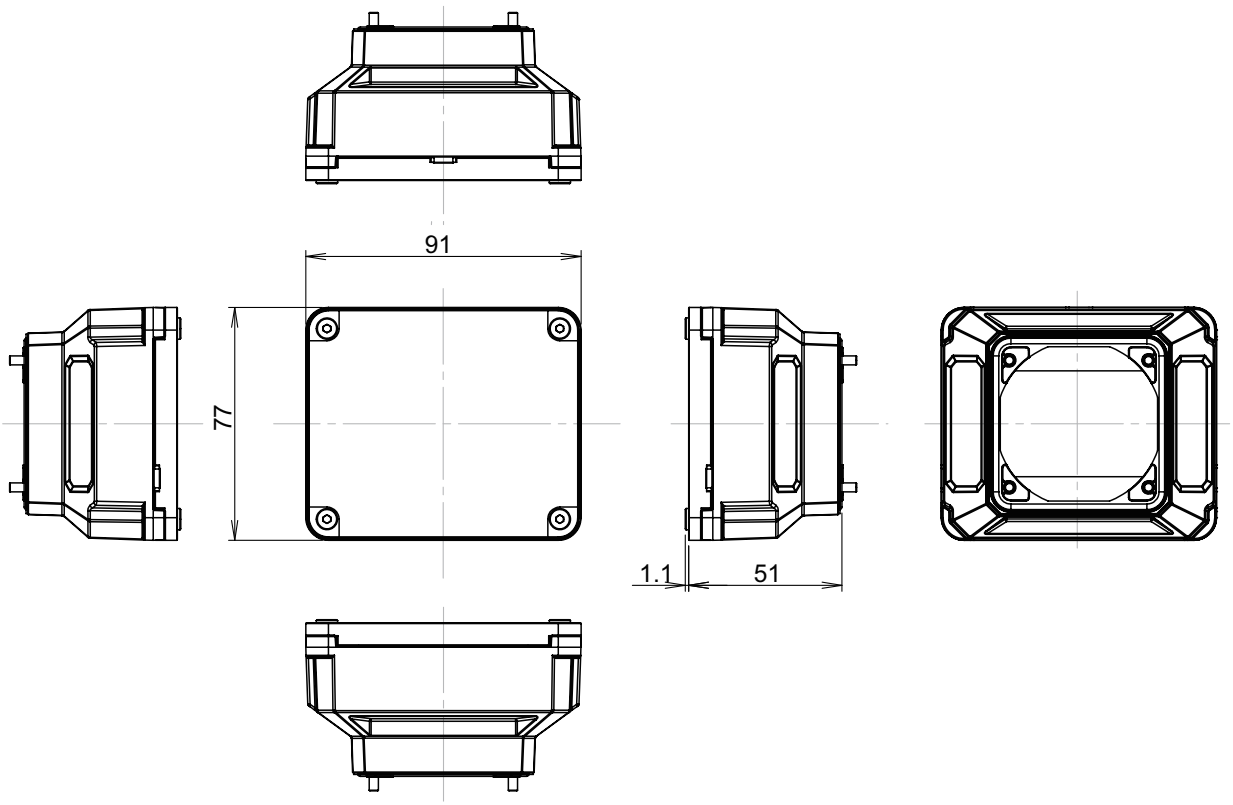

(Unit: mm)

Additional Information

We have the 2D CAD data or 3D CAD data.
You can download CAD data from www.fa.omron.co.jp.

3-7 Optical Filters

3-7-1 Specifications

Model		FHV-XDF	FHV-XPL	FHV-XPL-IR	FHV-XCV
Filter type		Diffusion filter	Polarization filter	Polarization filter	Lighting cover for replacement
Wavelength		Visible to infrared	Visible	Visible to infrared	Visible to infrared
Adapted lighting module		FHV-LTM-W FHV-LTM-R FHV-LTM-IR FHV-LTM-MC	FHV-LTM-W FHV-LTM-R FHV-LTM-MC (Infrared light is not used.)	FHV-LTM-W FHV-LTM-R FHV-LTM-IR FHV-LTM-MC	FHV-LTM-W FHV-LTM-R FHV-LTM-IR FHV-LTM-MC
Usage environment	Ambient temperature range	Operating: 0 to +40°C, Storage: -25 to +65°C (with no icing or condensation)			
	Ambient humidity range	Operating & Storage: 35 to 85% (With no condensation)			
	Vibration tolerance	No corrosive gases			
	Shock resistance	Oscillation frequency: 10 to 150Hz, Half amplitude: 0.35 mm, Vibration direction: X/Y/Z, Sweep time: 8 minutes/count, Sweep count: 10 times			
	Vibration tolerance	Impact force: 150 m/s^2, Test direction: 6 directions, three time each (up/down, front/behind, left/right)			
Material		Aluminum (A6061), polycarbonate			
Weight		Approx. 70 g	Approx. 70 g	Approx. 70 g	Approx. 70 g

3-7-2 Dimensions

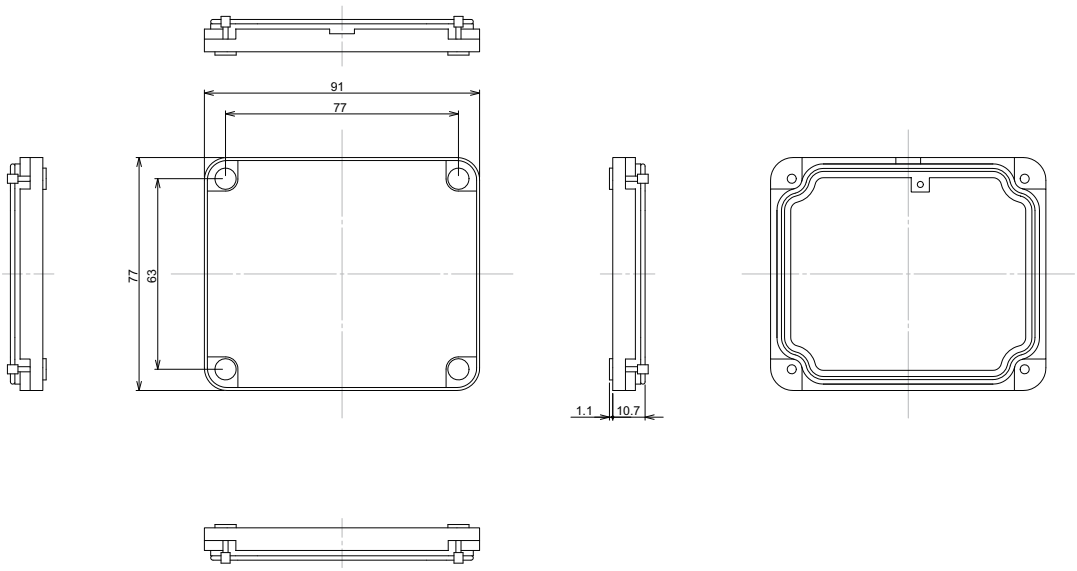

(Unit: mm)

Additional Information

We have the 2D CAD data or 3D CAD data.
You can download CAD data from www.fa.omron.co.jp.

3-8 Waterproof Hoods

3-8-1 Specifications

Item		FHV-XHD-S	FHV-XHD-L	FHV-XHD-LEM
Suitable lens		3Z4S-LE SV-V series SV-0614V SV-0813V SV-1214V SV-1614V SV-2514V	3Z4S-LE SV-H series SV-0614H*1 SV-0814H*2 SV-1214H SV-1614H SV-2514H SV-3514H SV-5014H	• FHV-LEM-S series FHV-LEM-S06 FHV-LEM-S09 FHV-LEM-S12 FHV-LEM-S16 FHV-LEM-S25 • FHV-LEM-H series FHV-LEM-H06 FHV-LEM-H19
Usage environment	Ambient temperature range	Operating: 0 to +40°C, Storage: -25 to +65°C (with no icing or condensation)		
	Ambient humidity range	Operating & Storage: 35 to 85% (with no condensation)		
	Ambient atmosphere	No corrosive gases		
	Vibration tolerance	Oscillation frequency: 10 to 150Hz, Half amplitude: 0.35 mm, Vibration direction: X/Y/Z, Sweep time: 8 minutes/count, Sweep count: 10 times		
	Shock resistance	Impact force: 150 m/s^2, Test direction: 6 directions, three time each (up/down, front/behind, left/right)		
Material		Aluminum (A6061), polycarbonate		
Weight		Approx. 220 g	Approx. 220 g	Approx. 220 g

*1. This is not available in FHV7□-□050, FHV7□-□063R, FHV7□-□120R.
*2. This is not available in FHV7□-□050.

3-8-2 Dimensions

- FHV-XHD-S

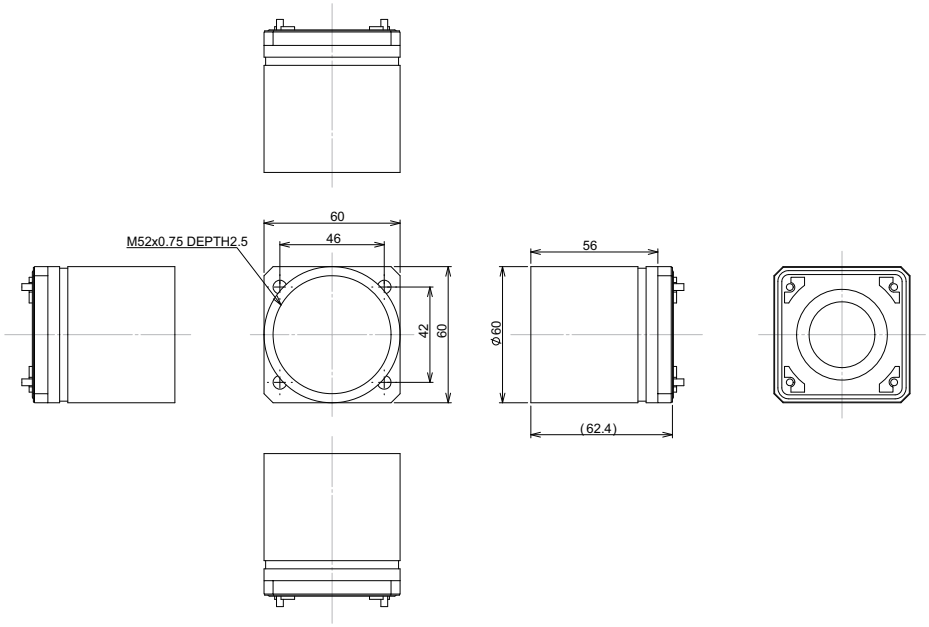

(Unit: mm)

- FHV-XHD-L

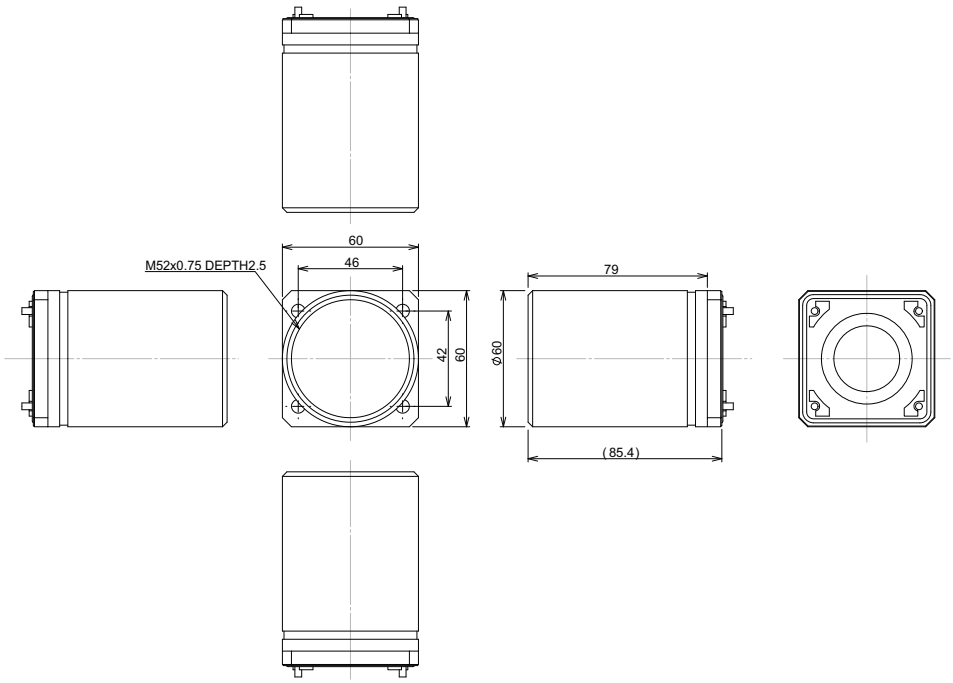

(Unit: mm)

- FHV-XHD-LEM

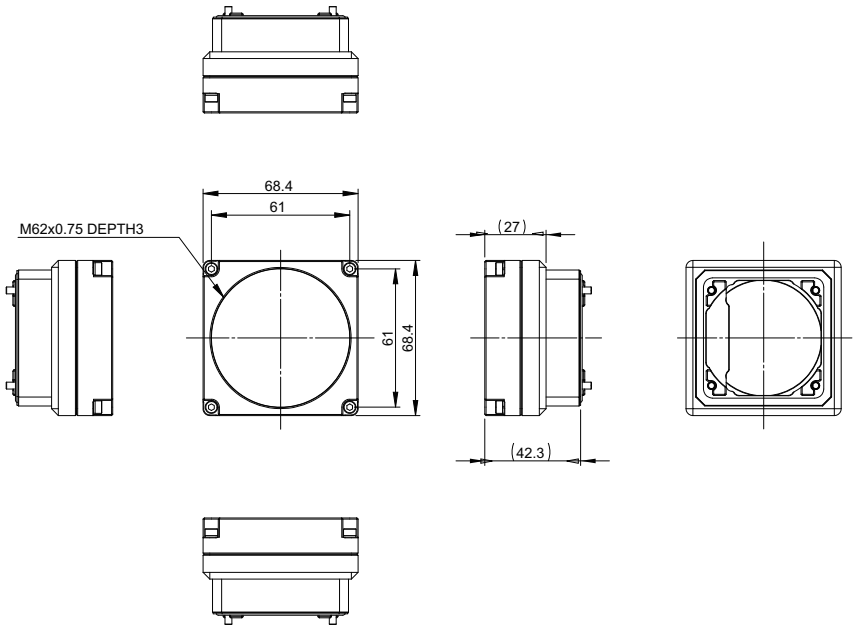

(Unit: mm)

- Outer size when the waterproof hood, FHV-XHD-S, is mounted.

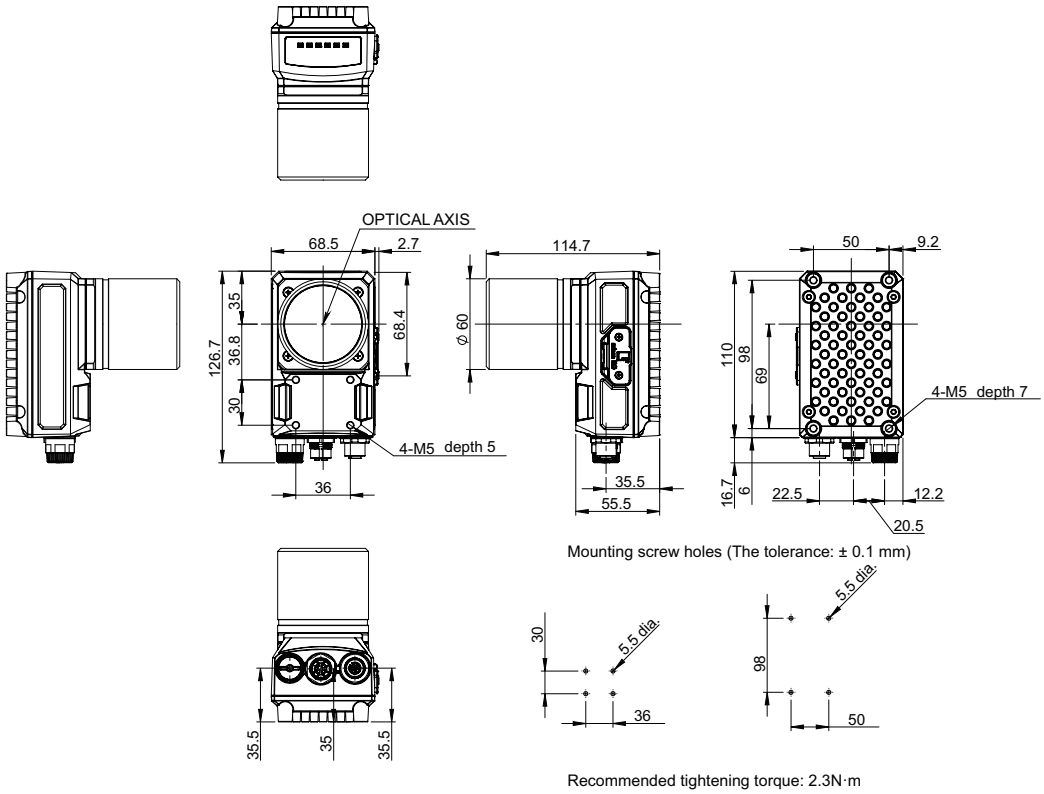

(Unit: mm)

- Outer size when the waterproof hood, FHV-XHD-L, is mounted.

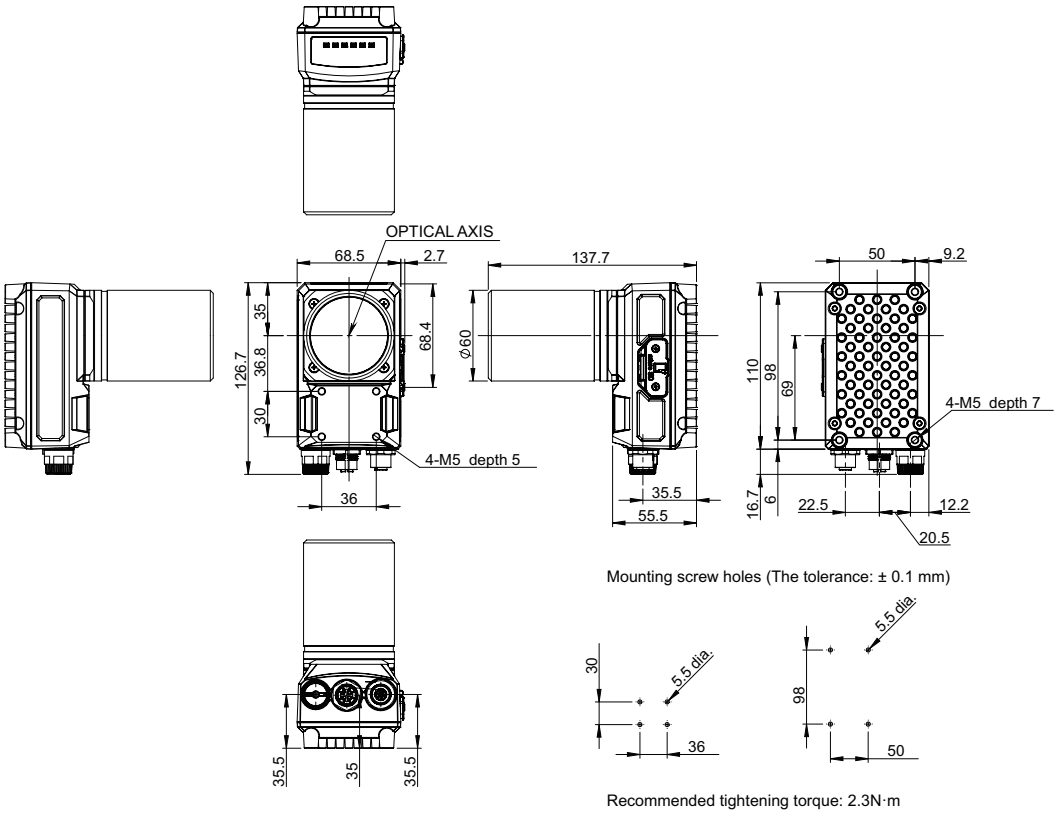

(Unit: mm)

- Outer size when the waterproof hood, FHV-XHD-LED, is mounted.

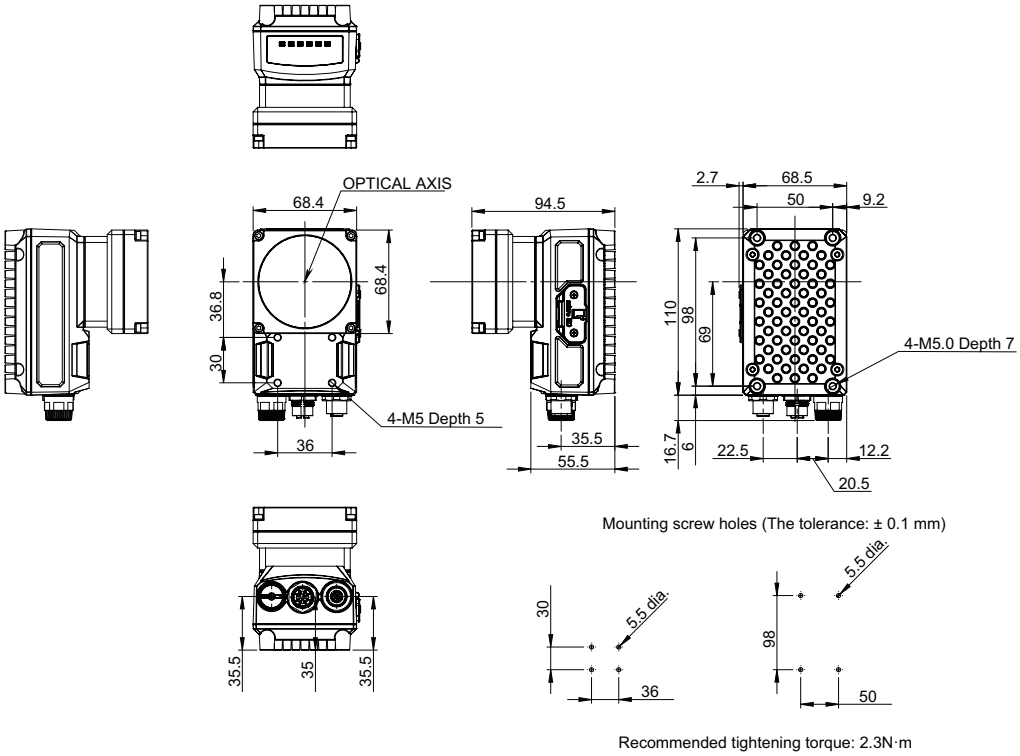

(Unit: mm)

Additional Information

We have the 2D CAD data or 3D CAD data.
You can download CAD data from www.fa.omron.co.jp.

3-9 Mounting Fixtures

3-9-1 Specifications

Item		FHV-XMT-7	FHV-XMT-7-TCC
Purpose		Special fixture for FHV7 series	
		For Smart Camera body and lighting controller mounting	For lighting controller mounting
Usage environment	Ambient temperature range	Operating: 0 to +40°C, Storage: -25 to +65°C (with no icing or condensation)	
	Ambient humidity range	Operating & Storage: 35 to 85% (with no condensation)	
	Vibration tolerance	No corrosive gases	
	Shock resistance	Oscillation frequency: 10 to 150Hz, Half amplitude: 0.35 mm, Vibration direction: X/Y/Z, Sweep time: 8 minutes/count, Sweep count: 10 times	
	Vibration tolerance	Impact force: 150 m/s^2, Test direction: 6 directions, three time each (up/down, front/behind, left/right)	
Material		Aluminum (A6061)	POM (Black)
Weight		Approx. 220 g	Approx. 50 g

3-9-2 Dimensions

- FHV-XMT-7

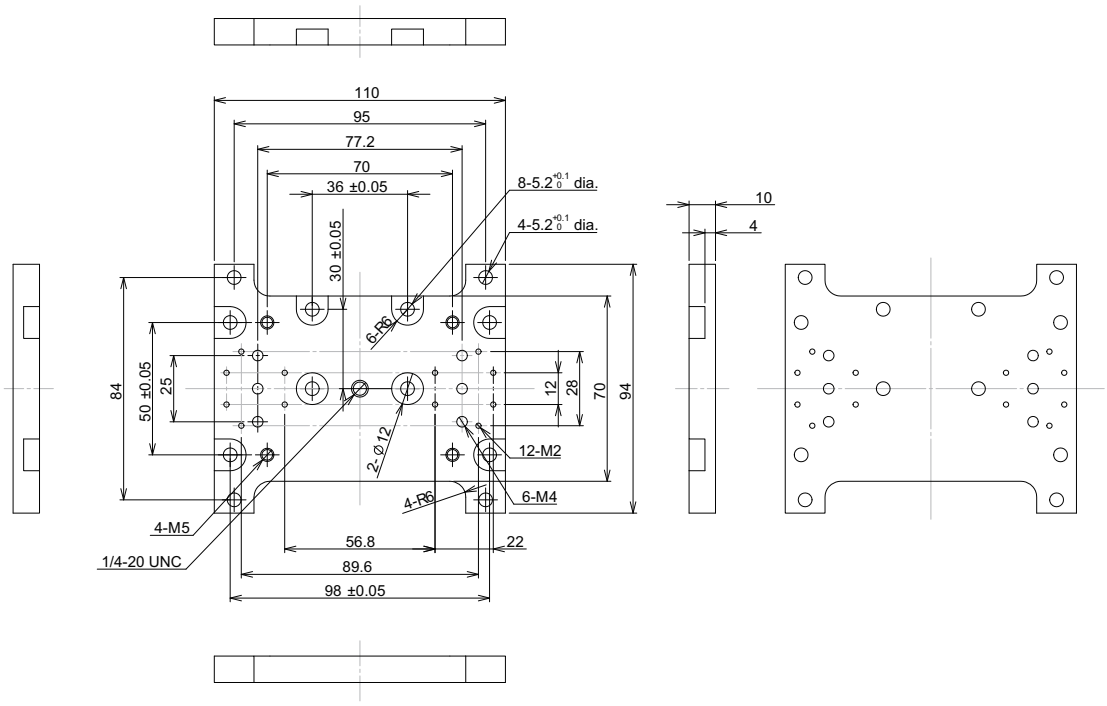

(Unit: mm)

- FHV-XMT-7-TCC

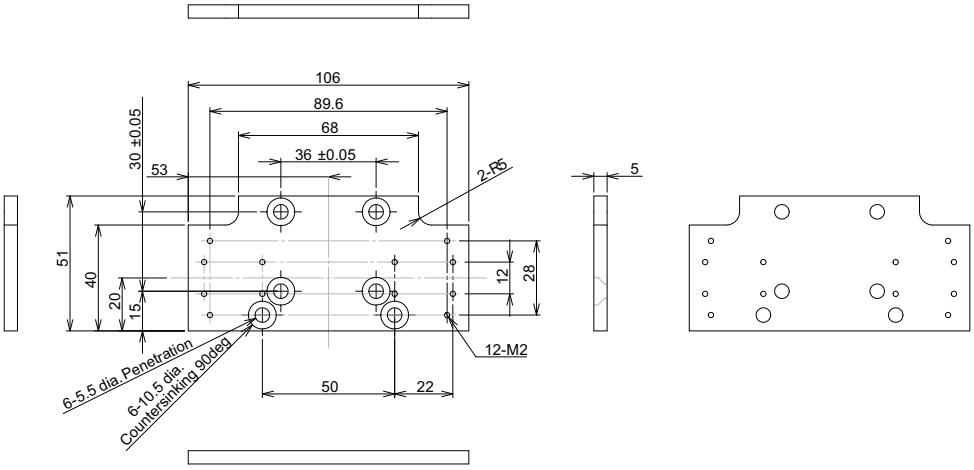

(Unit: mm)

Additional Information

We have the 2D CAD data or 3D CAD data.
You can download CAD data from www.fa.omron.co.jp.

3-10 Waterproof Packings

3-10-1 Specifications

Item		FHV-XWP-CAM	FHV-XWP-LTM	FHV-XWP-HD-SL
Application		For camera	For lighting module	For waterproof hood
Usage environment	Ambient temperature range	Operating: 0 to +40°C, Storage: -25 to +65°C (With no icing or condensation)		
	Ambient humidity range	Operating & storage: 35 to 85% (with no condensation)		
	Ambient atmosphere	No corrosive gases		
	Vibration tolerance	Oscillation frequency: 10 to 150Hz, Half amplitude: 0.35 mm, Vibration direction: X/Y/Z, Sweep time: 8 minutes/count, Sweep count: 10 times		
	Shock resistance	Impact force: 150 m/s^2, Test direction: 6 directions, three time each (up/down, front/behind, left/right)		
Material		NBA		
Weight		Approx. 5 g		

*1. Once this is used, be sure to replace it with a new one when the module is attached and detached.

3-10-2 Dimensions

- FHV-XWP-CAM

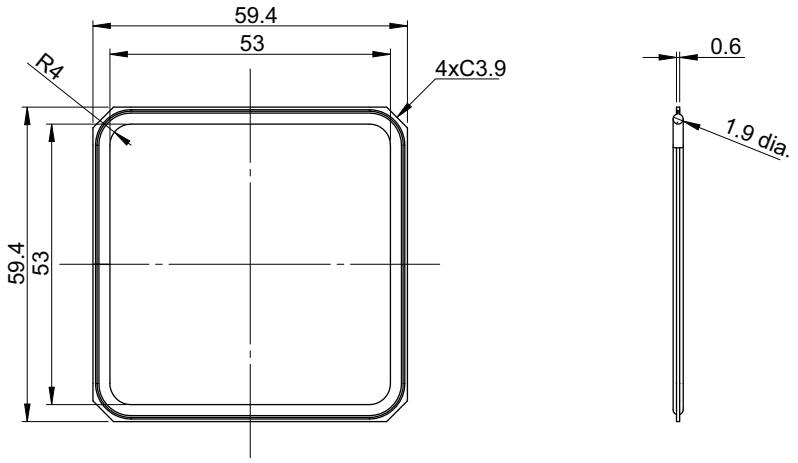

(Unit: mm)

- FHV-XWP-LTM

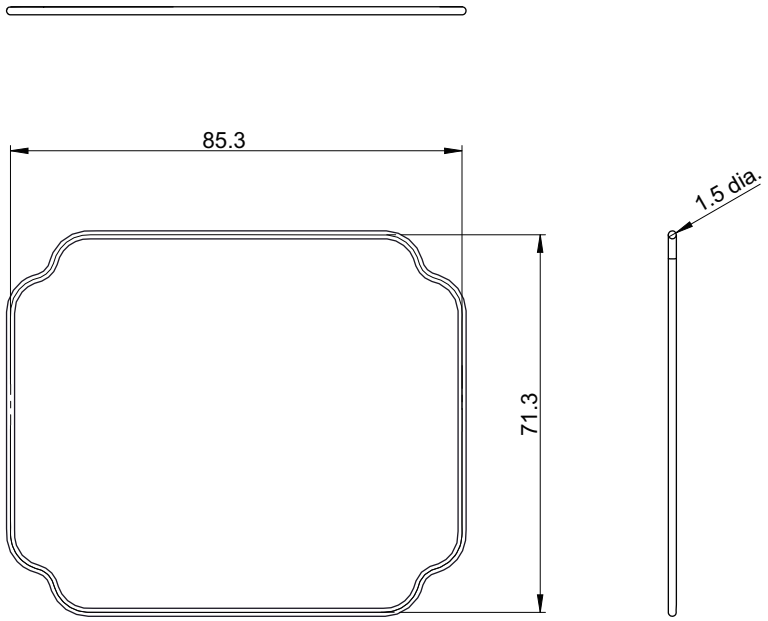

(Unit: mm)

- FHV-XWP-HD-SL

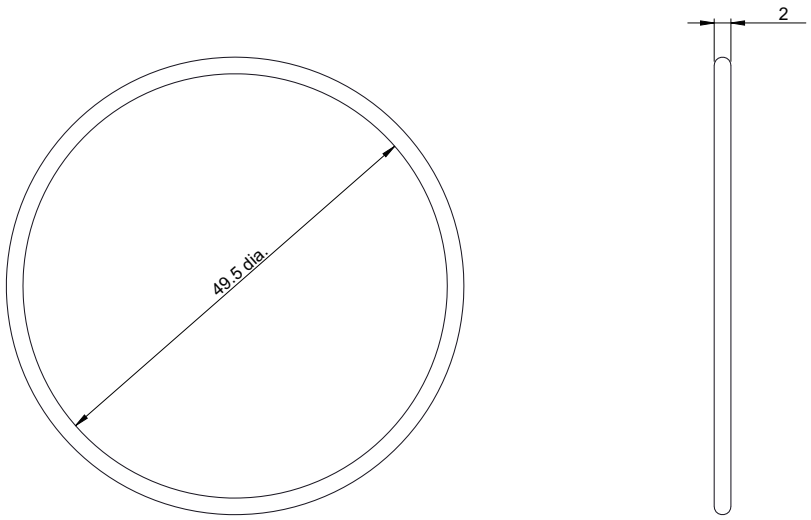

(Unit: mm)

Additional Information

We have the 2D CAD data or 3D CAD data.
You can download CAD data from www.fa.omron.co.jp.

3-11 Waterproof Caps

3-11-1 Specifications

Item		FHV-XWC-ECN	FHV-XWC-LCN
Application		For Ethernet connector	For lighting connector
Usage environment	Ambient temperature range	Operating: 0 to +40°C, Storage: -25 to +65°C (with no icing or condensation)	
	Ambient humidity range	Operating & storage: 35 to 85% (with no condensation)	
	Ambient atmosphere	No corrosive gases	
	Vibration tolerance	Oscillation frequency: 10 to 150Hz, Half amplitude: 0.35 mm, Vibration direction: X/Y/Z, Sweep time: 8 minutes/count, Sweep count: 10 times	
	Shock resistance	Impact force: 150 m/s^2, Test direction: 6 directions, three time each (up/down, front/behind, left/right)	
Material		Polyamide	Polycarbonate
Weight		Approx. 5 g	Approx. 5 g

3-11-2 Dimensions

- FHV-XWC-ECN

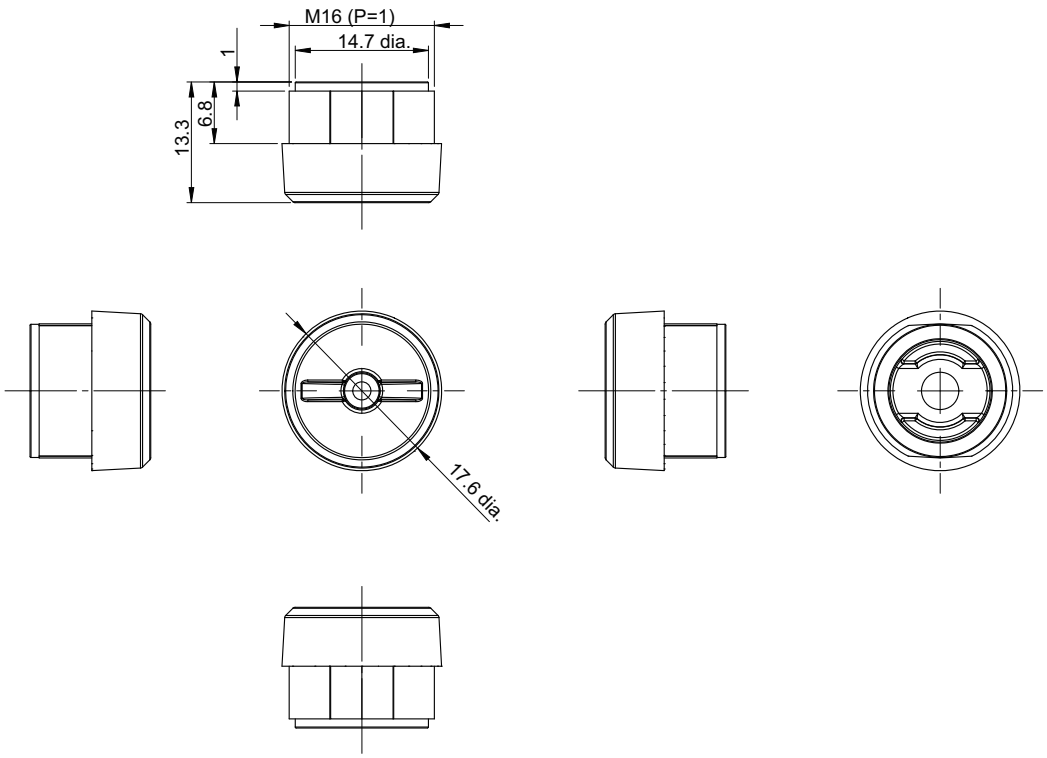

(Unit: mm)

- FHV-XWC-LCN

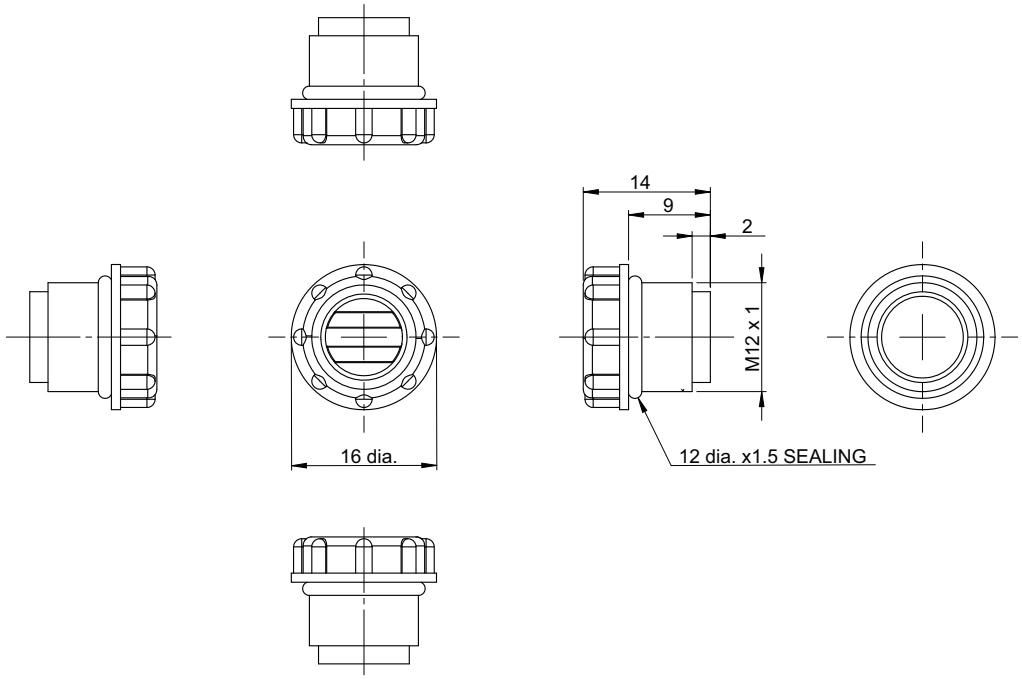

(Unit: mm)

Additional Information

We have the 2D CAD data or 3D CAD data.
You can download CAD data from www.fa.omron.co.jp.

3-12 Lightproof Sheet

3-12-1 Specifications

Item		FHV-XLS-LTM
Application		For lighting module
Usage environment	Ambient temperature range	Operating: 0 to +40°C, Storage: -25 to +65°C (with no icing or condensation)
	Ambient humidity range	Operating & storage: 35 to 85% (with no condensation)
	Ambient atmosphere	No corrosive gases
	Vibration tolerance	Oscillation frequency: 10 to 150Hz, Half amplitude: 0.35 mm, Vibration direction: X/Y/Z, Sweep time: 8 minutes/count, Sweep count: 10 times
	Shock resistance	Impact force: 150 m/s^2, Test direction: 6 directions, three time each (up/down, front/behind, left/right)
Material		Urethane
Weight		Approx. 5 g

It is considered a consumable item that will deteriorate. Please replace as needed.

3-12-2 Dimensions

- FHV-XLS-LTM

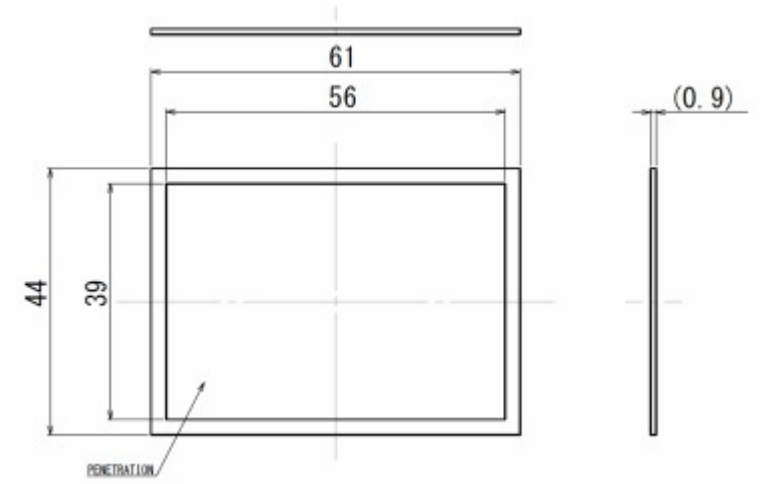

(Unit: mm)

Additional Information

We have the 2D CAD data or 3D CAD data.
You can download CAD data from www.fa.omron.co.jp.

3-13 Special Covers

3-13-1 Specifications

Item		FHV-XFC-C	FHV-XFC-LEM-S	FshuuHV-XFC-LEM-H
Application		For C mount lens	For lens module (FHV-LEM-S)	For lens module (FHV-LEM-H
Usage environment	Ambient temperature range	Operating: 0 to +40°C, Storage: -25 to +65°C (with no icing or condensation)		
	Ambient temperature range	Operating & storage: 35 to 85% (with no condensation)		
	Ambient atmosphere	No corrosive gases		
	Vibration tolerance	Oscillation frequency: 10 to 150Hz, Half amplitude: 0.35 mm, Vibration direction: X/Y/Z, Sweep time: 8 minutes/count, Sweep count: 10 times		
	Shock resistance	Impact force: 150 m/s^2, Test direction: 6 directions, three time each (up/down, front/behind, left/right)		
Material		Polycarbonate		
Weight		Approx. 9 g	Approx. 5 g	Approx. 5 g

3-13-2 Dimensions

- FHV-XFC-C

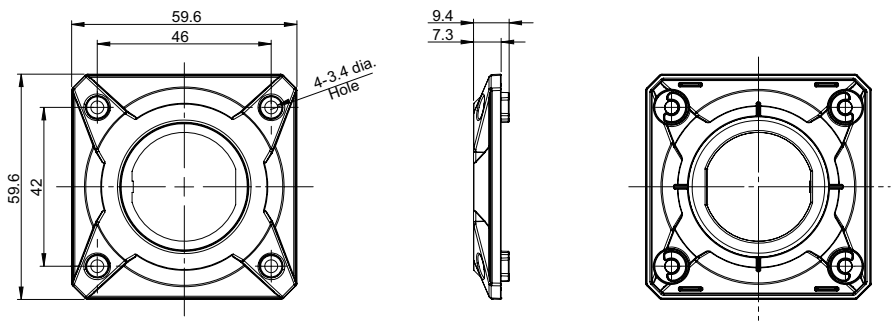

(Unit: mm)

- FHV-XFC-LEM-S

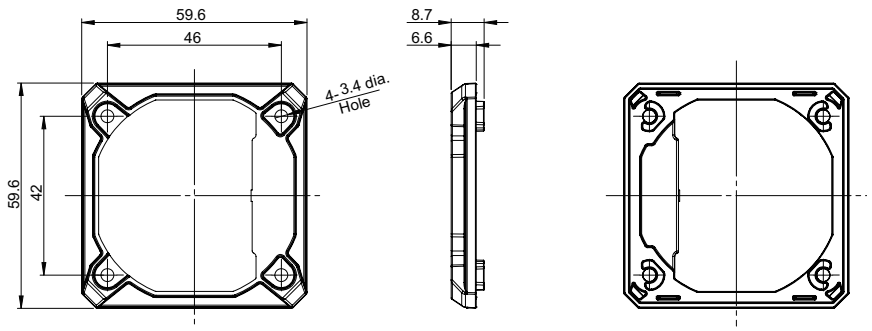

(Unit: mm)

- FHV-XFC-LEM-H

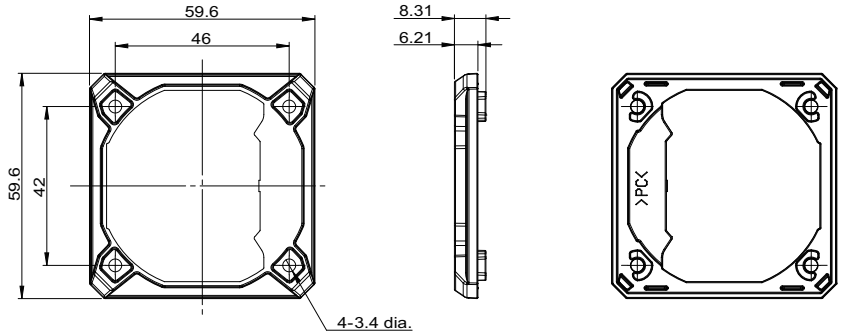

(Unit: mm)

Additional Information

We have the 2D CAD data or 3D CAD data.
You can download CAD data from www.fa.omron.co.jp.

3-14 Replacement Screws for MicroSD Card Cover

3-14-1 Specifications

Item		FHV-XSCR-MSD
Application		Special screws for MicroSD card cover
Usage environment	Usage environment	Operating: 0 to +40°C, Storage: -25 to +65°C (with no icing or condensation)
	Ambient humidity range	Operating & storage: 35 to 85% (with no condensation)
	Ambient atmosphere	No corrosive gases
	Vibration tolerance	Oscillation frequency: 10 to 150Hz, Half amplitude: 0.35 mm, Vibration direction: X/Y/Z, Sweep time: 8 minutes/count, Sweep count: 10 times
	Shock resistance	Impact force: 150 m/s^2, Test direction: 6 directions, three time each (up/down, front/behind, left/right)
Material		Stainless (screw), EPDM (packing)
Weight		Approx. 0.3 g

3-14-2 Dimensions

- FHV-XSCR-MSD

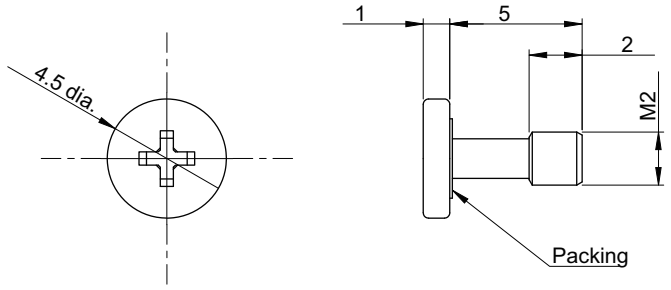

(Unit: mm)

Additional Information

We have the 2D CAD data or 3D CAD data.
You can download CAD data from www.fa.omron.co.jp.

3-15 Software

There are two special software:
- FH_FHV Remote Operation tool
- Simulation software

3-15-1 Remote Operation Tool

This Remote Operation tool supports Smart Camera of all FHV series. It is used to set conditions for inspection and measurement, and output image processing results according to the set conditions.
You can download the simulation software with free by registering as our member after purchasing.
For details, please check the membership registration card packed in the package.

3-15-2 Simulation Software

The simulation software allows you to experience the operability of FHV series on PC.
You can download the simulation software with free by registering as our member after purchasing.
For details, please check the membership registration card packed in the package.

3-15-3 Sysmac Studio

Use the latest version of Sysmac Studio when the FHV series and Sysmac Studio are connected.

FHV series	Version of the FHV series	Corresponding version of Sysmac Studio
FHV7□-□□□□*1	Ver. 6.80	Ver. 1.69 (Scheduled to be released around January 2027) or later
	Ver. 6.55 to Ver. 6.73	Ver. 1.59 or later
	Ver. 6.51	Ver. 1.53 or later
	Ver. 6.41	Ver. 1.53 or later
	Ver. 6.30	Ver. 1.30 or later

*1. To connect the FHV series through EtherCAT, the data unit, FHV-SDU30, for Smart Camera is required.

4

Handling and Installation Environment

4-1 Warning 4-2

4-1 Warning

⚠ WARNING

This product must be used according to this manual and the instruction sheet. Failure to observe this may result in the impairment of functions and performance of the product.	⚠
Please do not use this product to directly or indirectly use to detect the human body for the purpose of ensuring the safety.	⊘

Precautions for Safe Use

Installation Environment

- Do not use the product in areas where flammable or explosive gases are present.
- Do not install the product close to high-voltage devices and power devices in order to secure the safety of operation and maintenance.
- Do not install the product to a place where vibrations and/or impacts are expected.
- Do not install the product near to a device causing noises. if the product is installed in a noisy environment and operational errors are caused, be sure to take shielding measures.

Precautions for Correct Use

Installation Location

In order to prevent the product from becoming inoperable or malfunction, and to prevent other adverse effects to the performance or equipment, please observe the following.

- A location where the ambient temperature does not exceed the rated range.
- A location where the temperature does not vary sharply (condensation occurs).
- A location where relative temperature does not exceed a range of 35-85%.
- A location not exposed to corrosive gases or combustible gases.
- A location not exposed to dust, salt, or metal powder.
- A location not exposed to direct vibration or impact.
- A location not exposed to strong disturbance light (laser light, arc welding light, or ultraviolet light).
- A location not near a heating appliance or exposed to direct sunlight.
- A location not exposed to mist of water, oil, or chemicals or misty atmosphere.
- A location not exposed to strong magnetic/electric fields.
- A location not near a high-voltage device or power device.
- A location where rubber quality is not deteriorated.

MicroSD Card Handling

- If removing the microSD card, confirm that data are not being read or written before removing it.
- Do not insert the microSD card inversely, obliquely, or as twisting it.
- While data are being read in or written to the microSD card, the SD ACCESS LED on the smart camera main unit is turned on for a while. Remove the card after checking that the LED is completely turned off.
- Except when inserting or removing the microSD card, put the cover of the microSD card inserting connector and screw it up before using the product.

Camera Installation

- In a hot and humid environment, Condensation may occur if stored, assembled, or used.
  If cloudy, remove the lighting cover or water-proof hood and wipe off the inside with a soft cloth.
  If condensation remains, keep the product under normal temperature and normal humidity (around 25°C and 50%RH) with its power ON for about two hours before assembling the waterproof hood and lighting module.
- If installing smart camera main units side by side, secure a space of 30 mm or more wide between them.

5

Installation

5-1 Assembling Equipment 5-2
5-1-1 C Mount Lens / IP40 Configuration 5-2
5-1-2 C Mount Lens / IP67 Configuration 5-3
5-1-3 Standard Lens Module / IP40 Configuration 5-5
5-1-4 Standard Lens Module / IP67 Configuration 5-8
5-1-5 High-speed Lens Module / IP40 Configuration 5-10
5-1-6 High-speed Lens Module / IP67 Configuration 5-13
5-1-7 Lens Module / Internal Lighting / IP67 Configuration 5-15

5-2 Mounting the Data Unit for the Smart Camera 5-19
5-2-1 Mounting to DIN Rail 5-19

5-3 Installing the Smart Camera 5-20
5-3-1 How to Connect 5-20
5-3-2 When Connecting the Smart Camera to a Lighting Controller 5-25

5-1 Assembling Equipment

5-1-1 C Mount Lens / IP40 Configuration

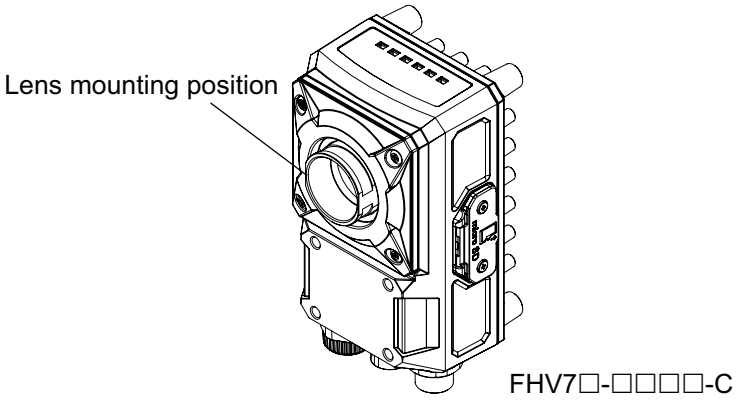

1 Attach the C Mount Lens to the Smart Camera body.

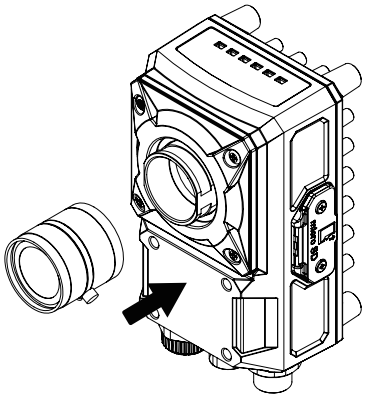

2 Securely tighten the C mount lens.

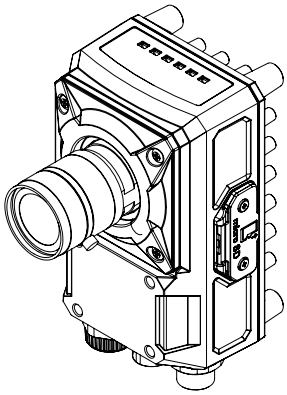

3 Adjust focus and aperture and fix them.

5-1-2 C Mount Lens / IP67 Configuration

1 Remove the C mount cover from Smart Camera.

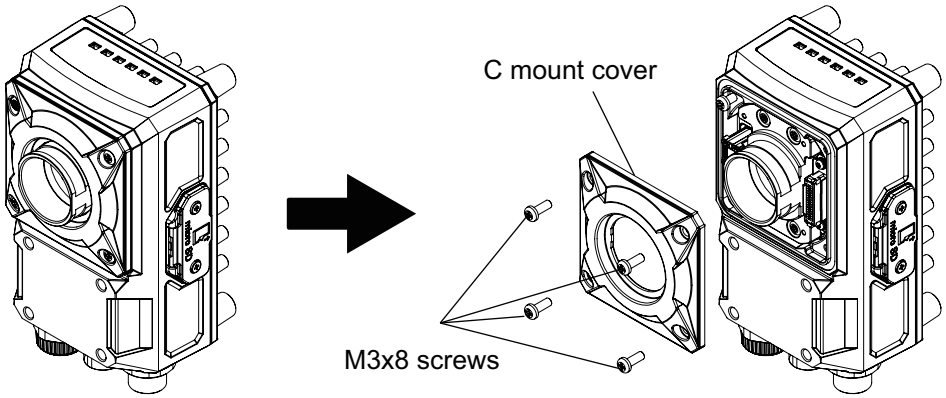

2 Attach the waterproof packing and then attach the hood base with the screws included with the packing.
Recommended tightening torque: 0.54 N·m

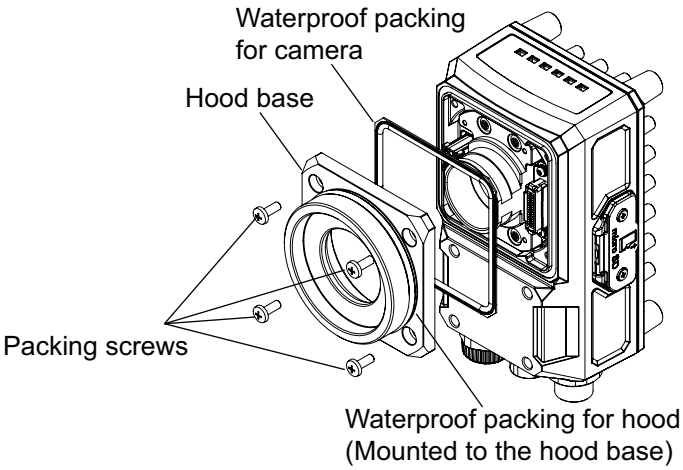

3 Attach the C mount Lens.

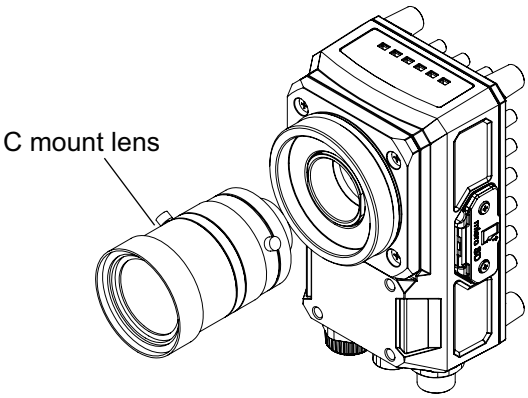

4 Adjust the focus and aperture and fix them.

Precautions for Correct Use

Once the correct focus is set, secure in place by tightening the lock screws.

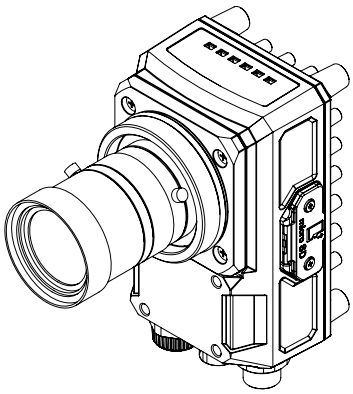

5 Attach the waterproof hood.

Precautions for Correct Use

When attaching the hood cover, tighten it securely until the bottom of the hood cover is touching the hood base surface.

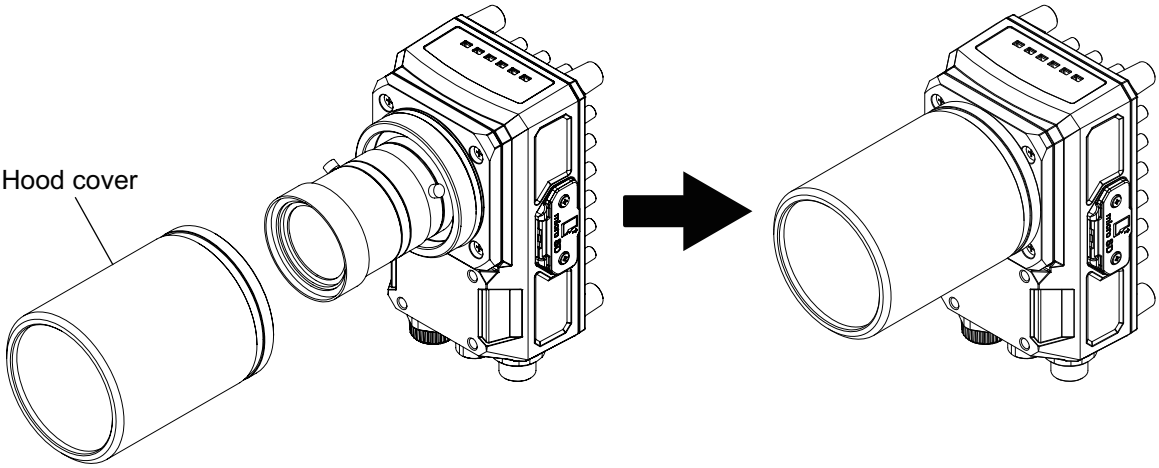

5-1-3 Standard Lens Module / IP40 Configuration

Attaching the Lens Module

⚠ WARNING

This product must be used according to the instructions in the manual or instruction sheet.
Failure to observe this may result in impairment of functions and performance of the product.

⚠ Caution

In rare events, there is a possibility of mild burns. Do not touch the camera body while it is in operation, or just after power is turned OFF, since it can be extremely hot.

When attaching the lens module or cover, make sure to tighten all attaching screws securely.
Failure to do so may damage the unit, causing malfunction, or injury.

Precautions for Safe Use

- Do not use waterproof packing that has been scratched, or has any foreign matter adhering to it.
- The lens module is specifically designed for use with the FHV Series Smart Camera Do not use it for any other purpose.
- Do not remove or replace the lens or any other part of the lens module.
- Be sure to turn OFF the power of the Smart Camera itself and any peripheral devices connected to it when attaching or removing the lens module. Failing to do so can cause equipment malfunction or damage.
- Tighten the mounting screws securely with the specified torque and in the order described in this manual.
- Do not apply excessive stress to lenses and connectors. It may damage the connectors.
- Do not touch the lens or cover with bare hands. It may result in malfunction or damage to the product.
- When using a lens module without a lighting module or waterproof cover, be sure that they are protected using the covers included with the product specifically for that purpose.
- Please ensure the compatibility of the lens module to the Smart Camera before attempting to attach it. If they are not compatible, it may result in malfunction.

Precautions for Correct Use

Maintenance

- Always turn OFF the power and ensure safety before performing maintenance.
- Clean the lens with a lens-cleaning cloth or air brush.
- When attaching the lens module, if any large dust particles, or other foreign matter gets on the imaging element, please blow it off with a blower brush (for camera lens). Please avoid breathing, or blowing on it.
- Do not use thinner, alcohol, benzene, acetone, kerosene, etc. for cleaning the lens module.

Optical Axis and Field of View

- The optical axis center may vary slightly from product to product. When installing, be sure to check the center position of the image on the monitor. Due to the nature of the material, the center of the optical axis of this product may change by several pixels due to changes in the ambient temperature.
- Please select the model after checking the field of view and camera installation distance on the optical chart. Also, the field of view may vary slightly from product to product. When installing, be sure to check the image on the monitor.

Other

- Continually switching the focus after the initial adjusting and setting of focus at installation time could adversely affect performance over time due to heat generation or internal part wear.
- Attaching the lens module, FHV-LEM-S, to the Smart Camera does change its vibration resistance specification.
- When using the lens module in an environment requiring waterproofing, please use waterproof hood FHV-XHD-LEM.
- Excessive vibration or shock may cause focus to be shifted. Please take care to avoid it.
- After attaching the lens module, do not touch the lens module part. It may result in damage to the product.
- Attach the lens module to the Smart Camera using its locking screws. Do not attempt to remove the locking screws from the lens module as they are not intended to be completely removable.

Please attach the module following these procedures.

1 Remove the C mount cover from the Smart Camera.

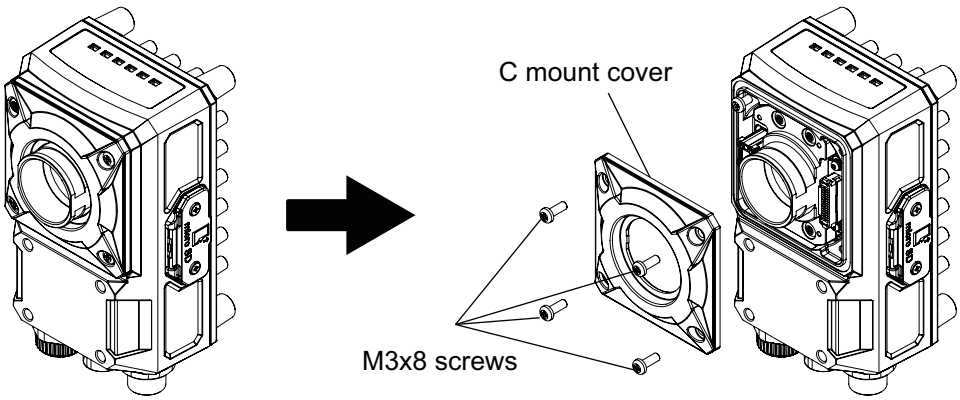

2 Attach the lens module to the Smart Camera body.

Precautions for Correct Use

- Ensure that there is no foreign matter on the surface of the image sensor before attaching it.
- Connect the lens module to the (black) lens module connector of the Smart Camera.
- Tighten the screws in order of 1 to 4 as shown in the figure below.
- Tightening torque: 0.15 N·m

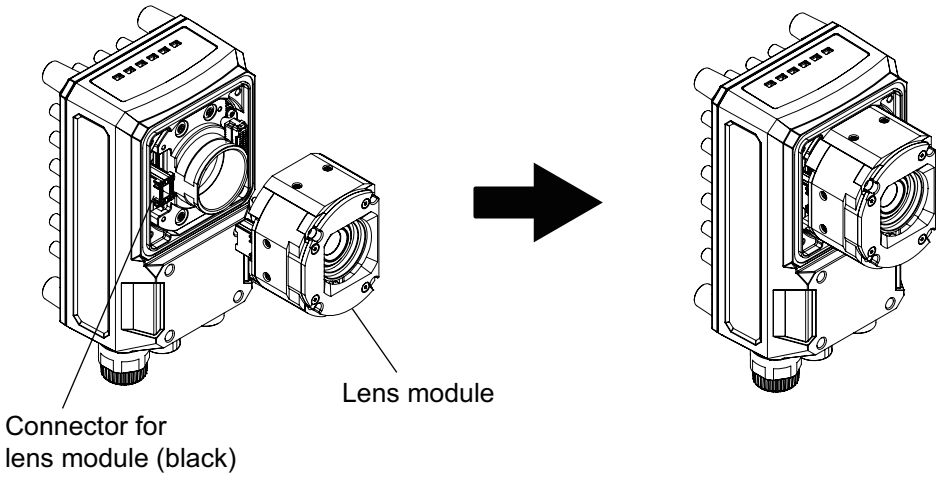

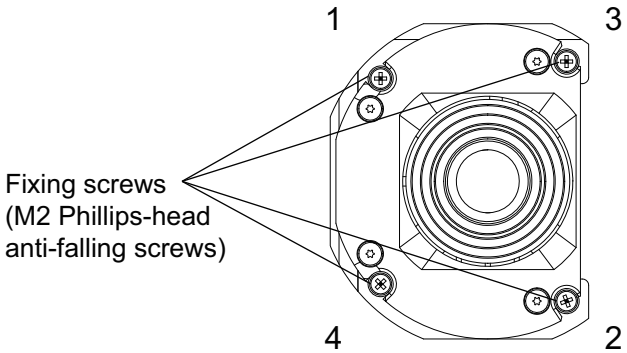

3 Attach the FHV-LEM□□-S cover.

Precautions for Correct Use

- Note that this is unnecessary when the lighting module, or waterproof hood is used.
- Align the orientation of the cover so that the (white) lighting module connector is covered and not visible.
- Tightening torque: 0.54 N·m

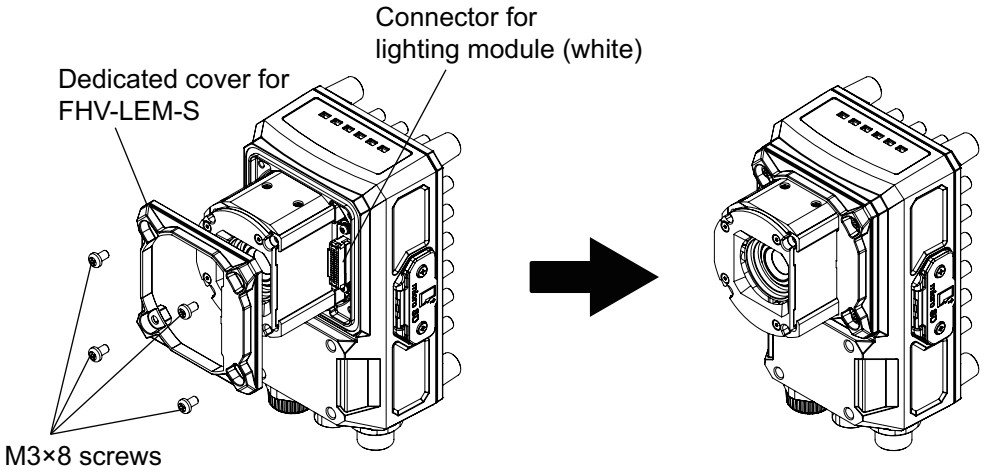

5-1-4 Standard Lens Module / IP67 Configuration

1 Remove the FHV-LEM-S cover from the FHV7□-□□□□□-S□□ Smart Camera.

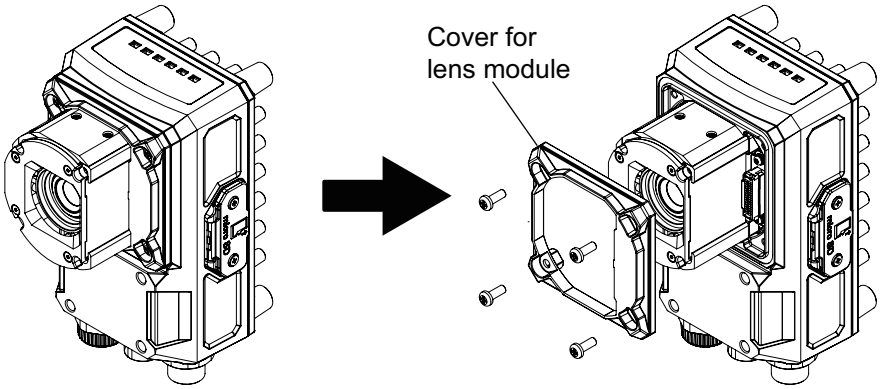

2 Attach the waterproof packing and the hood base.

Precautions for Correct Use

- Place the waterproof packing along the groove of the Smart Camera, being careful not to twist it.
- Pass the hexagon wrench included with the waterproof hood through the holes and tighten the screws in order of 1 to 4 as shown in the figure below.
- Recommended tightening torque (M3 Hexagon socket screw): 0.54 N·m

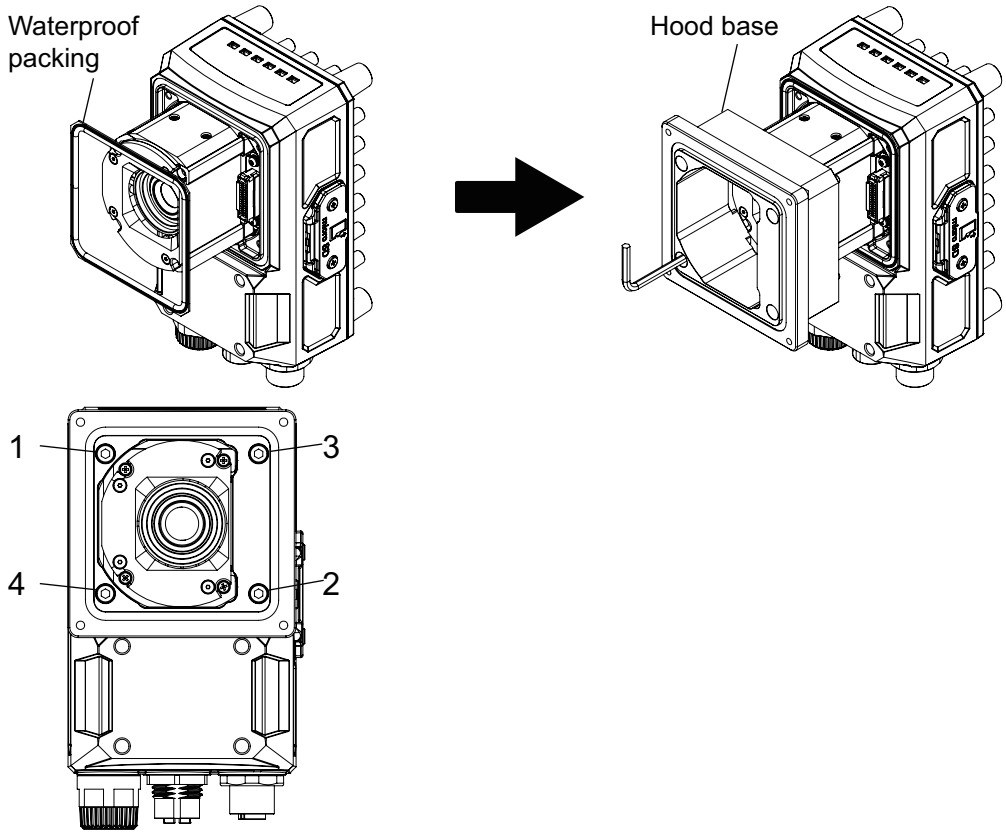

3 Attach the waterproof packing and hood cover.
Using the same hexagon wrench, tighten the screws in the order shown below.
Tightening torque (M2.5 Hexagon screw): 0.3 N·m

Precautions for Correct Use

- Place the waterproof packing along the groove of the Smart Camera, being careful not to twist it.
- Pass the hexagon wrench included with the waterproof hood through the holes and tighten the screws in order of 1 to 4 as shown in the figure below.
- Recommended tightening torque (M3 Hexagon socket screw): 0.54 N·m

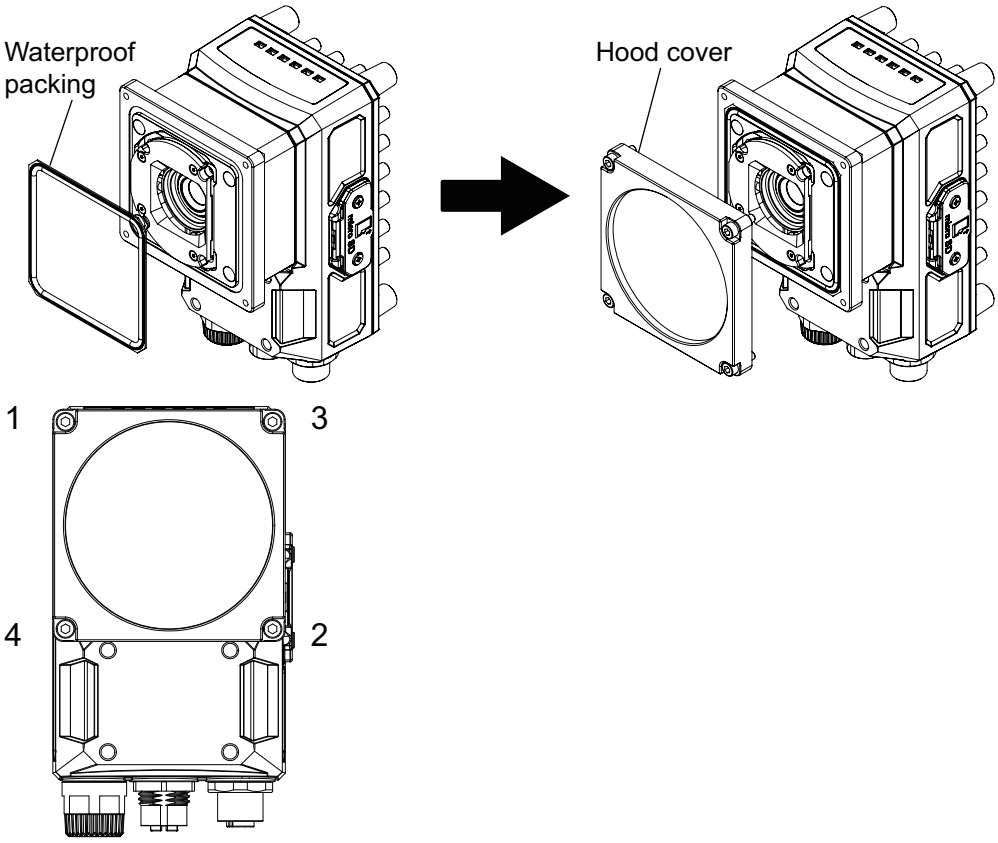

5-1-5 High-speed Lens Module / IP40 Configuration

Attaching the Lens Module

⚠ WARNING

This product must be used according to the instructions in the manual or instruction sheet. Failure to observe, this may result in impairment of functions and performance of the product.

⚠ Caution

In rare events, there is a possibility of mild burns. Do not touch the camera body while it is in operation, or just after power is turned OFF, since it can be extremely hot.

When attaching the lens module or cover, make sure to tighten all attaching screws securely. Failure to do so may damage the unit, causing malfunction, or injury.

Precautions for Safe Use

- Do not use waterproof packing that has been scratched, or has any foreign matter adhering to it.
- The lens module is specifically designed for use with the FHV Series Smart Camera Do not use it for any other purpose.
- Do not remove or replace the lens or any other part of the lens module.
- Be sure to turn OFF the power of the Smart Camera itself and any peripheral devices connected to it when attaching or removing the lens module. Failing to do so can cause equipment malfunction or damage.
- Tighten the mounting screws securely with the specified torque and in the order described in this manual.
- Do not apply excessive stress to lenses and connectors. It may damage the connectors.
- Do not touch the lens or cover with bare hands. It may result in malfunction or damage to the product.
- When using a lens module without a lighting module or waterproof cover, be sure that they are protected using the covers included with the product specifically for that purpose.
- Please ensure the compatibility of the lens module to the Smart Camera before attempting to attach it. If they are not compatible, it may result in malfunction.

Precautions for Correct Use

Maintenance

- Always turn OFF the power and ensure safety before performing maintenance.
- Clean the lens with a lens-cleaning cloth or air brush.
- When attaching the lens module, if any large dust particles, or other foreign matter gets on the imaging element, please blow it off with a blower brush (for camera lens). Please avoid breathing, or blowing on it.
- Do not use thinner, alcohol, benzene, acetone, kerosene, etc. for cleaning the lens module.

Optical Axis and Field of View

- The optical axis center may vary slightly from product to product. When installing, be sure to check the center position of the image on the monitor. Due to the nature of the material, the center of the optical axis of this product may change by several pixels due to changes in the ambient temperature.
- Please select the model after checking the field of view and camera installation distance on the optical chart. Also, the field of view may vary slightly from product to product. When installing, be sure to check the image on the monitor.

Other

- Continually switching the focus after the initial adjusting and setting of focus at installation time could adversely affect performance over time due to heat generation or internal part wear.
- Attaching the lens module to the Smart Camera does change its vibration resistance specification.
- When using the lens module in an environment requiring waterproofing, please use waterproof hood FHV-XHD-LEM.
- Excessive vibration or shock may cause focus to be shifted. Please take care to avoid it.
- After attaching the lens module, do not touch the lens module part. It may result in damage to the product.
- Attach the lens module to the Smart Camera using its locking screws. Do not attempt to remove the locking screws from the lens module as they are not intended to be completely removable.

Please attach the module following these procedures.

1 Remove the C mount cover from the Smart Camera.

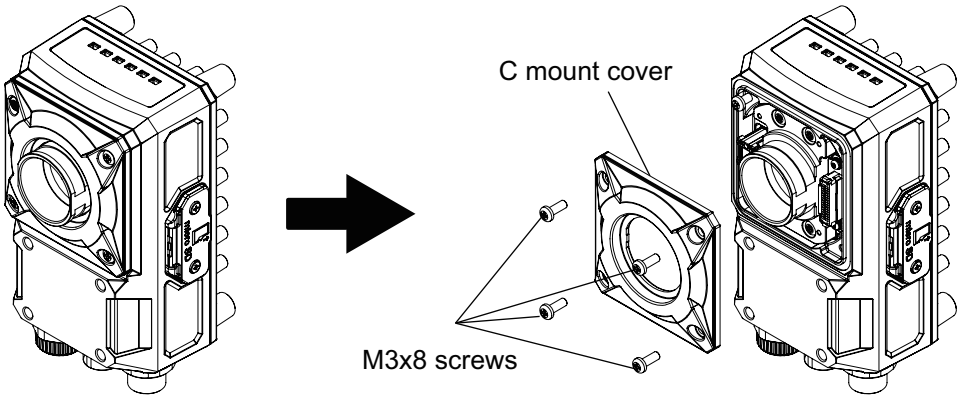

2 Attach the lens module to the Smart Camera body.

Precautions for Correct Use

- Ensure that there is no foreign matter on the surface of the image sensor before attaching it.
- Connect the lens module to the (black) lens module connector of the Smart Camera.
- Tighten the screws in order of 1 to 4 as shown in the figure below.
- Tightening torque: 0.15 N·m

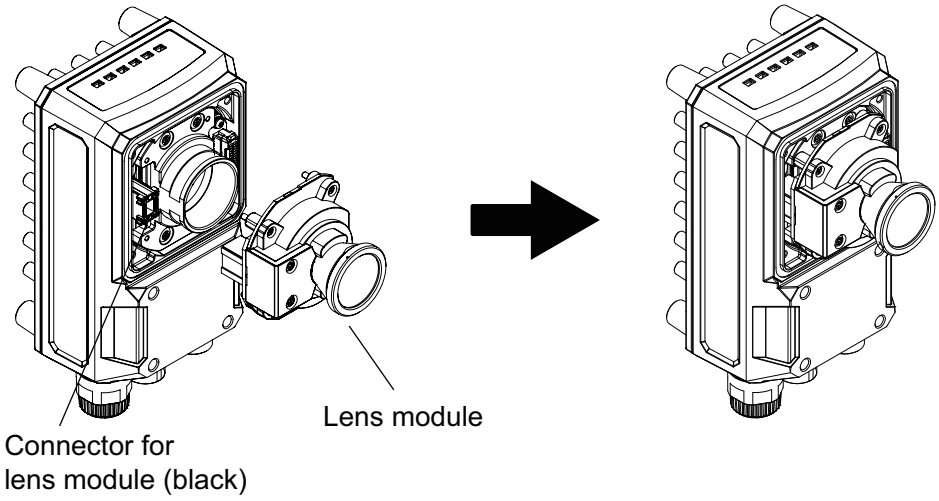

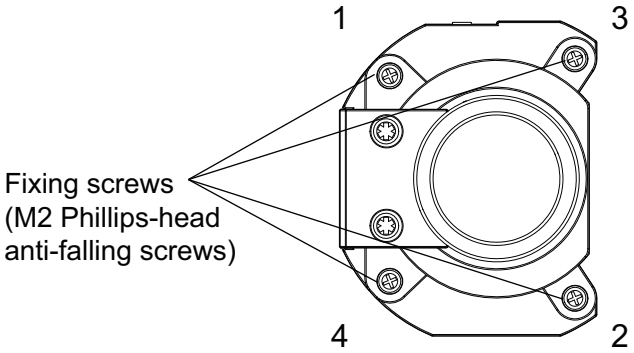

3 Attach the FHV-LEM-H.

Precautions for Correct Use

- Note that this is unnecessary when the lighting module, or waterproof hood is used.
- Align the orientation of the cover so that the (white) lighting module connector is covered and not visible.
- Tightening torque: 0.54 N·m

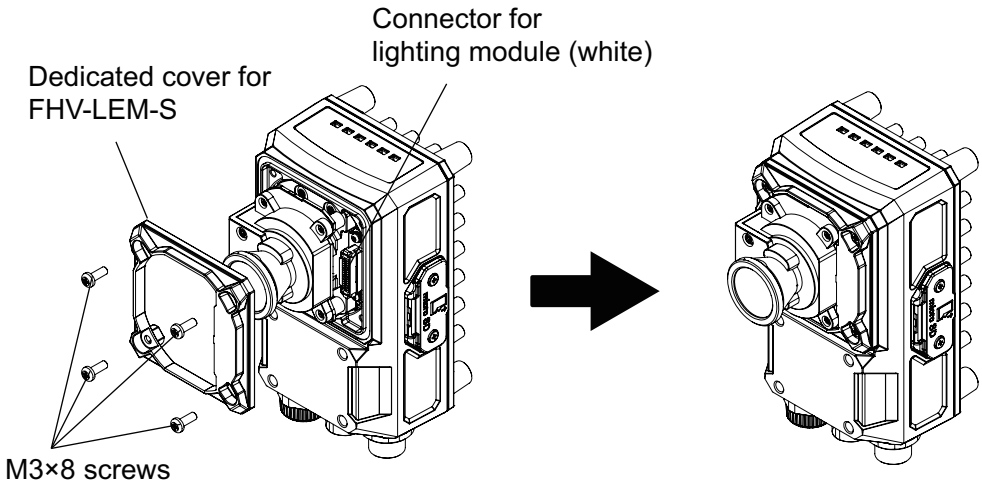

5-1-6 High-speed Lens Module / IP67 Configuration

1 Remove the FHV-LEM-H cover from the FHV7□-□□□□□-H□□.

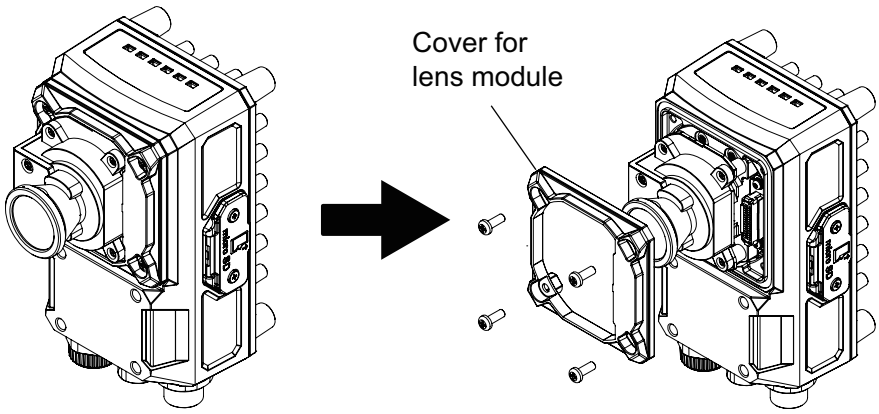

2 Attach the waterproof packing and the hood base.

Precautions for Correct Use

- Place the waterproof packing along the groove of the Smart Camera, being careful not to twist it.
- Pass the hexagon wrench included with the waterproof hood through the holes and tighten the screws in order of 1 to 4 as shown in the figure below.
- Recommended tightening torque (M3 Hexagon socket screw): 0.54 N·m

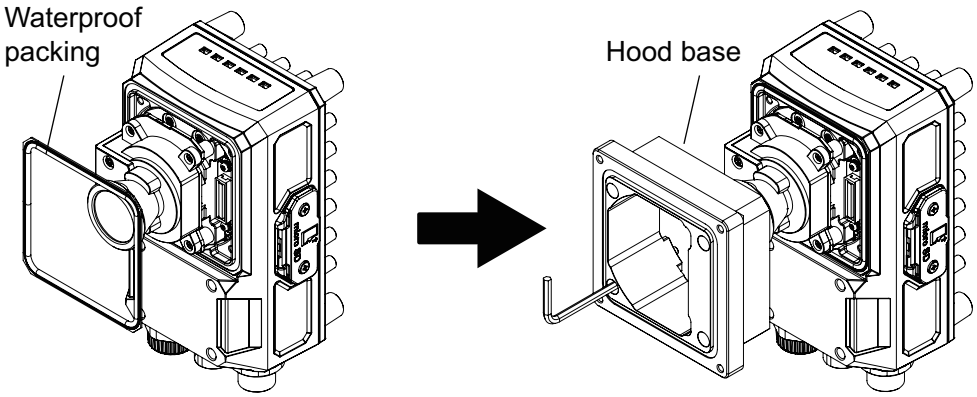

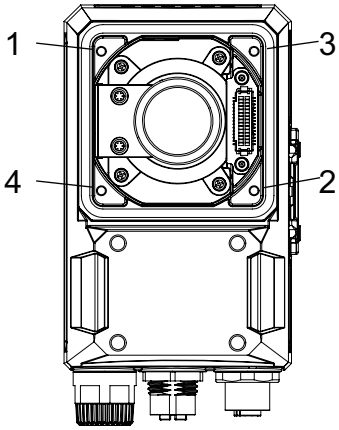

3 Attach the waterproof packing and hood cover.

Using the same hexagon wrench, tighten the screws in the order shown below.

Tightening torque (M2.5 Hexagon screw): 0.3 N·m

Precautions for Correct Use

- Place the waterproof packing along the groove of the Smart Camera, being careful not to twist it.
- Pass the hexagon wrench included with the waterproof hood through the holes and tighten the screws in order of 1 to 4 as shown in the figure below.
- Recommended tightening torque (M3 Hexagon socket screw): 0.54 N·m

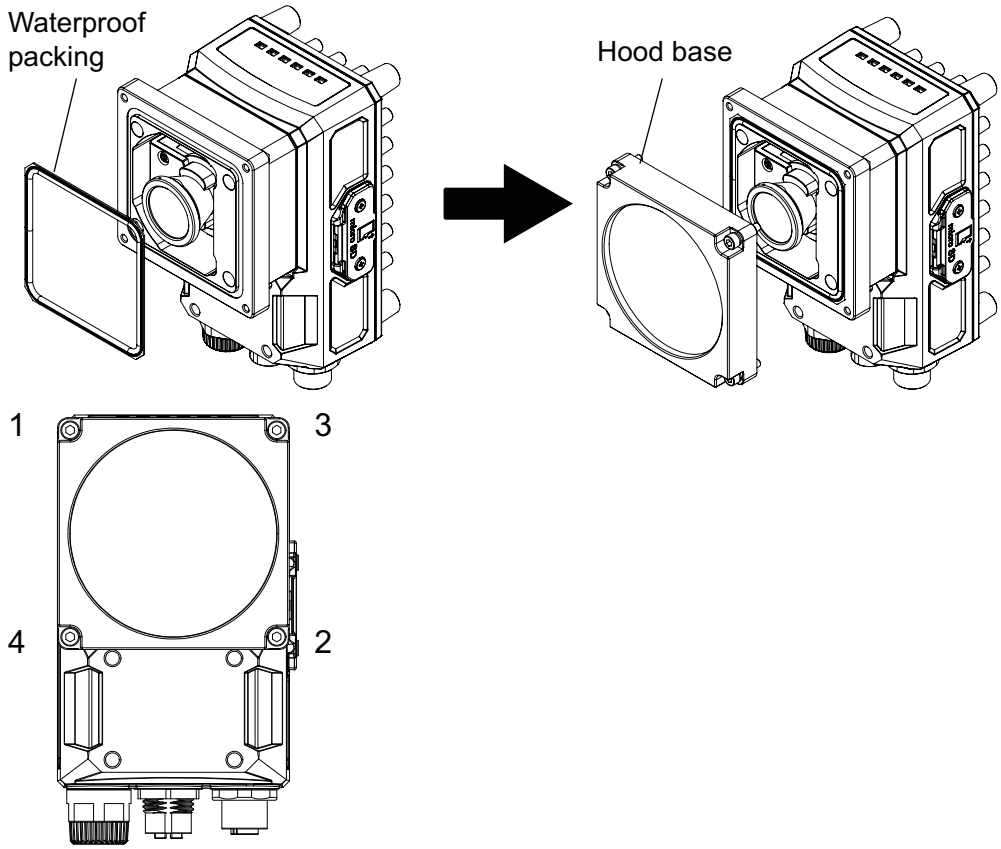

5-1-7 Lens Module / Internal Lighting / IP67 Configuration

Attaching the Lighting Module

Please attach it following these procedures.

⚠ WARNING

This product must be used according to this manual or instruction sheet. Failure to do so may result in impairment of functions and performance of the product.

Continually look at the LED light may in rare cases cause visual impairment. Do not stare directly into the light emitted from the lighting module. Likewise, if an object with a reflective surface is used, take care not to allow the reflected light to enter your eyes.

⚠ Caution

In rare events, there is a possibility of mild burns. Do not touch the camera body while it is in operation, or just after power is turned OFF, since it can be extremely hot.

When attaching the lighting module or cover, make sure to tighten all attaching screws securely. Failure to do so may damage the unit, causing malfunction, or injury.

Precautions for Safe Use

Installation
- This product is the module exclusively used for smart camera FHV series. Do not use it for other purposes.
- Be sure to turn OFF the power of the smart camera itself and any peripheral devices connected to it when attaching or removing the lighting module. Failing to do so can cause equipment malfunction or damage.
- To ensure waterproofing, follow the correct mounting method and use it only after it has been attached in the correct order.
- Tighten the mounting screws securely with the specified torque and in the order described in this manual.
- Take care that waterproof packing and harnesses do not catch on, or get pinched between any parts of the case when assembling.
- Do not use waterproof packing or light shielding sheet that has been scratched, or has any foreign matter adhering to it.

Other
- The module is specifically designed for use with the (FHV7 Series) Smart Camera. Do not attempt to use it for any other purpose.
- Do not touch the face plate of the lighting with bare hands.
- Do not touch any exposed circuit board or electronic components with bare hands. It may result in damage to the product.
- Should you notice any abnormal odor, sound, smoke, or excessive heat emitting from the product, immediately stop use, turn OFF the power supply, and contact your OMRON representative.
- Do not attempt to dismantle, repair, modify, or deform the product in any way.
- When disposing of the product, treat it as industrial waste.
- Do not drop the product nor apply excessive vibration or shock to the product. Doing so may damage the product.
- The waterproof packing is made of a rubber material. Avoid storing it in a location where rubber may deteriorate easily.

Precautions for Correct Use

Maintenance
- Turn OFF the power and ensure the safety before maintenance.
- Lightly wipe off dirt with a soft cloth.
- Do not use thinner, alcohol, benzene, acetone, kerosene, etc. for cleaning this product.

Warm up Time
- When performing a precise inspection, please use after 60 minutes or more after turning on the power supply. Since the circuit is not stable immediately after turning on the power, the brightness may change gradually.

Camera placement
- In a hot and humid environment, Condensation may occur if stored, assembled, or used.
  If cloudy, remove the lighting cover or water-proof hood and wipe off the inside with a soft cloth.
  If condensation remains, keep the product under normal temperature and normal humidity (around 25°C and 50%RH) with its power ON for about two hours before assembling the waterproof hood and lighting module.

Other
- There are two types of polarization filters corresponding to the visible light range (FHV-XPL) and the visible light to infrared light range (FHV-XPL-IR). Please use the correct filter according to the type of light source.
- Attach this product to the Smart Camera using its locking screws. Do not attempt to remove the locking screws from the product as they are not intended to be completely removable.

Please attach the lighting module following these procedures.

1 Attach the lens module.
For more detailed information on the lens module, please refer to *5-1-3 Standard Lens Module / IP40 Configuration* on page 5-5.

2 Attach the waterproof packing (small).

Precautions for Correct Use

Place the waterproof packing along the groove of the Smart Camera, being careful not to twist it.

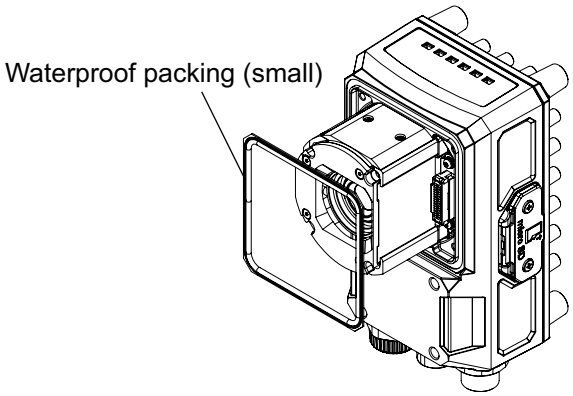

3 Connect the harness of the lighting module to the lighting module connector (white) of the Smart Camera.

Precautions for Correct Use

- Do not pull or stress the harness when attaching.
- Hold the connector part of the harness and attach/detach the lighting module.
- Take care that the harness does not catch on, or get pinched between any parts of the case when assembling.

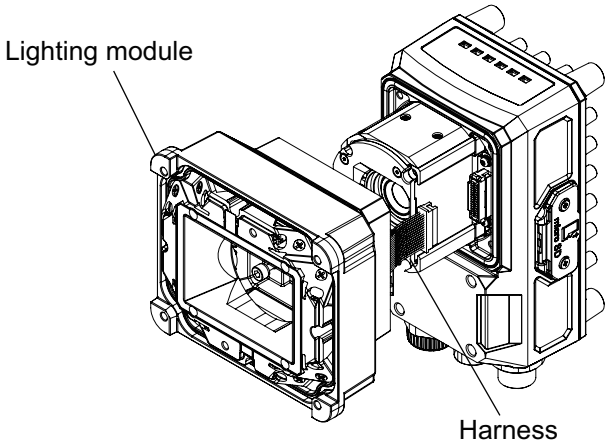

4 Attach the lighting module

Precautions for Correct Use

- Pass the included hexagon wrench through the holes and tighten the screws in order of 1 to 4 as shown in the figure below.
- Recommended tightening torque (M3 Hexagon socket screw Hole size 2.5 mm): 0.54 N·m

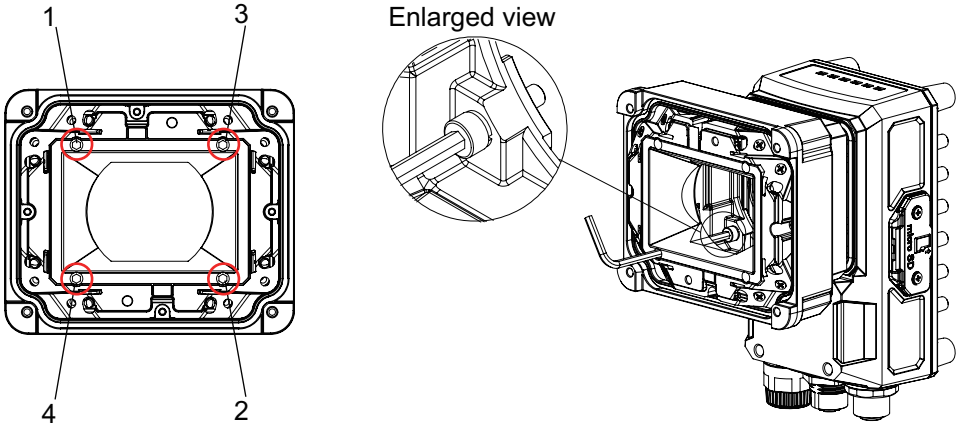

5 Attach waterproof packing (large), light shielding sheet, lighting cover in that order.

Precautions for Correct Use

- Place the waterproof packing and light shielding sheet along the groove, being careful not to twist them.
- Pass the included hexagon wrench through the holes and tighten the screws in order of 1 to 4 as shown in the figure below.
- Recommended tightening torque (M2.5 Hexagon socket screw Hole size 2.5 mm): 0.3 N·m

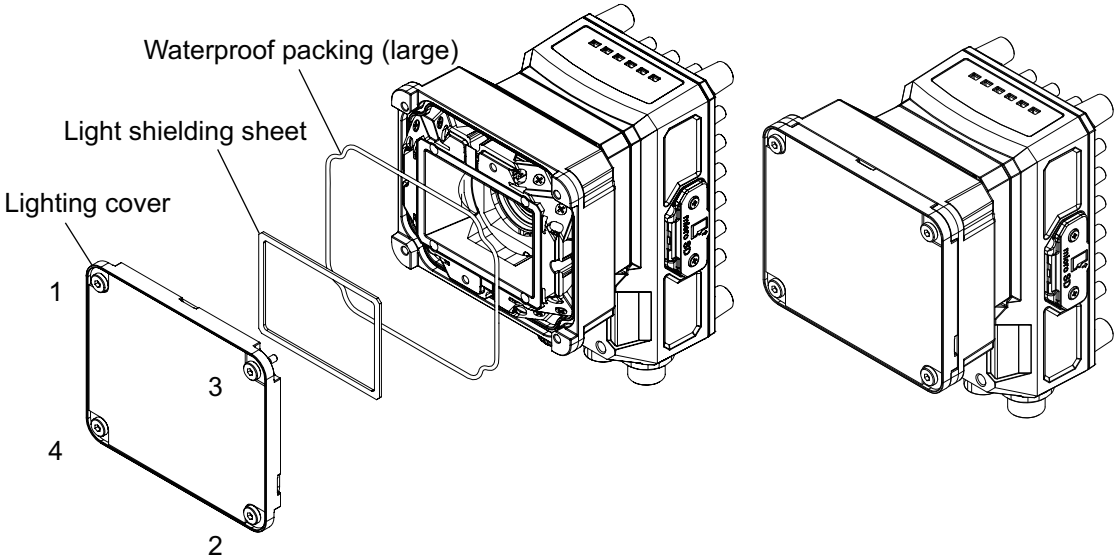

5-2 Mounting the Data Unit for the Smart Camera

5-2-1 Mounting to DIN Rail

How to Mount

1. Fix the data unit using the upper and lower tabs of the data unit for the Smart Camera.
2. Push the slider of the data unit for the Smart Camera to the upper part.
3. Hook the upper tab of the data unit for the Smart Camera to the DIN rail.
4. Push the data unit until the lower tab of it is clicked.

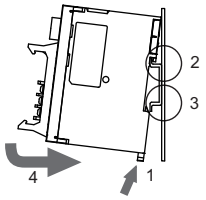

Precautions for Correct Use

- nd plates (sold separately) to both sides of the data unit for the Smart Camera mounted on the DIN rail.
- Be sure to hook the upper tab to the DIN rail first, and then mount the data unit for the Smart Camera to it. If the lower tab were hooked to the DIN rail first, the mounting strength will be lower.

How to Remove

1. Pull the slider of the data unit downward.
2. Lift the data unit from the bottom to remove it from the DIN rail.

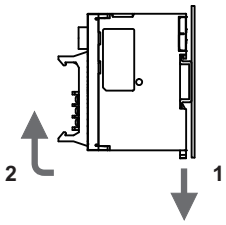

5-3 Installing the Smart Camera

5-3-1 How to Connect

Precautions for Safe Use

Installation

- Be sure to turn OFF the power of the Smart Camera itself and any peripheral devices connected to it when doing any of the following. Failing to do so can cause equipment malfunction and damage.
  - When connecting wires or cables
  - When connecting or disconnecting any connectors
  - When connecting or disconnecting lighting modules
  - When connecting or disconnecting lens modules
- Tighten the mounting screws securely with the specified torque and in the order described in this manual.
- Be sure to attach the connector cap when removing the cable. Failure to do so may result in malfunction or equipment damage due to foreign matter getting in to the connector.
- Do not apply torsion stress to the cable. It may damage the cable.
- Secure the minimum bending radius of the cable. Otherwise the cable may be damaged.

Precautions for Correct Use

For good ventilation, provide a clearance of 30 mm or more.

- Do not let the ambient temperature exceed 40°C.
  Provide a forced-air fan cooling or air conditioning if the ambient temperature is near 40°C or higher so that the ambient temperature never exceeds 40°C.

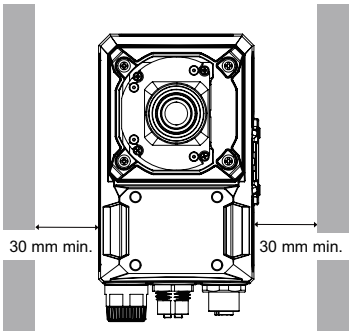

When Mounting the Smart Camera Directly (without Mounting Fixture)

1 Attach with M5 screws.

Precautions for Correct Use

Please refer to the Product Dimension Diagram for the position of the screw holes. Note that models with integrated lighting cannot be attached by its front surface.

Tightening torque: 2.3 N·m

- When mounting from the back side:

Mounting screw hole depth: Effective depth 6 mm

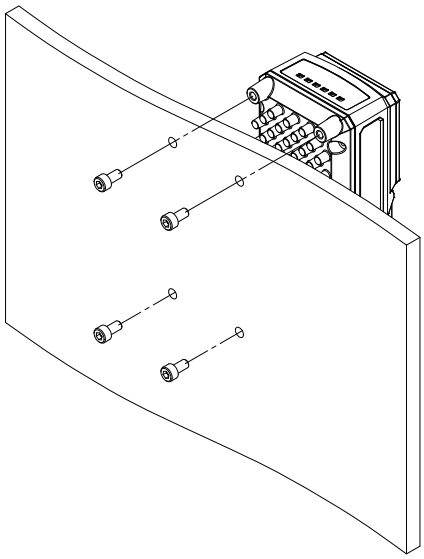

- When mounting from the front side:

Mounting screw hole depth: Effective depth 4 mm

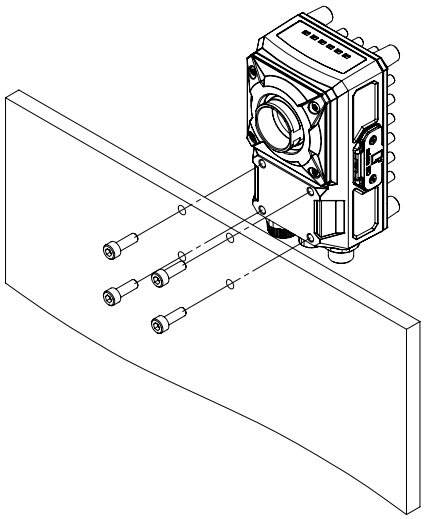

Precautions for Correct Use

Note that models with integrated lighting cannot be attached by its front surface.

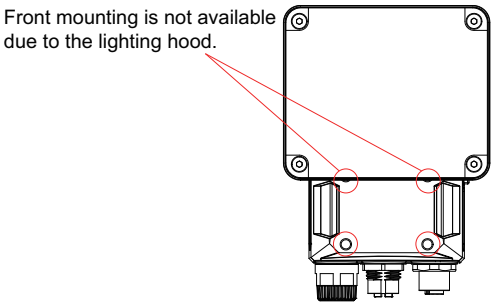

When Mounting the Smart Camera Using the Mounting Fixture

When attaching the mounting fixture to the Smart Camera, a special fixture (FHV-XMT-7) can be used that allows it to be attached by the screws to the front of the Smart Camera. Attach it to either the back or the front of the Smart Camera.

● When Installing Using the Mounting Fixture

1 Attach the mounting fixture (FHV-XMT-7) to the back of the camera.
Recommended mounting screw size: M5 x 10 mm
Tightening torque: 2.3 N·m
* M5 screws for mounting are not included with this product. Please provide or purchase them separately.

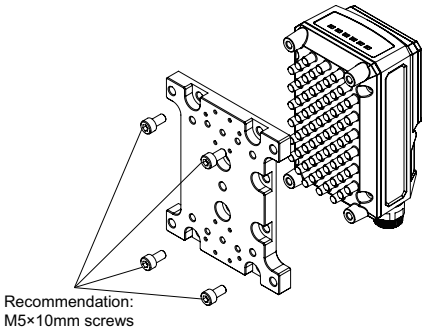

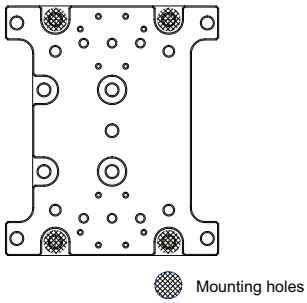

2 Attach the mounting fixture to the desired position.
* M5 screws for mounting are not included with this product. Please provide or purchase them separately.

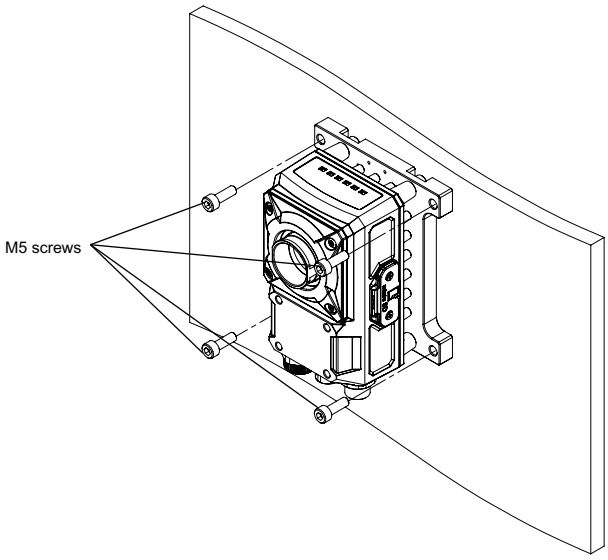

● When Installing Using the Mounting Fixture on the Front

1 Attach the mounting fixture (FHV-XMT-7) to the front.
Recommended mounting screw size: M5 x 8 mm
Tightening torque: 2.3 N·m
* M5 screws for mounting are not included with this product. Please provide or purchase them separately.

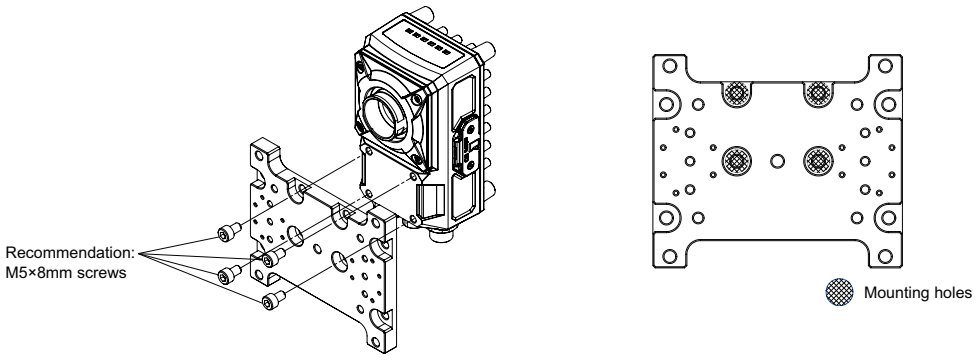

2 Attach the mounting fixture to the desired position for mounting.
* M5 screws for mounting are not included with this product. Please provide or purchase them separately.

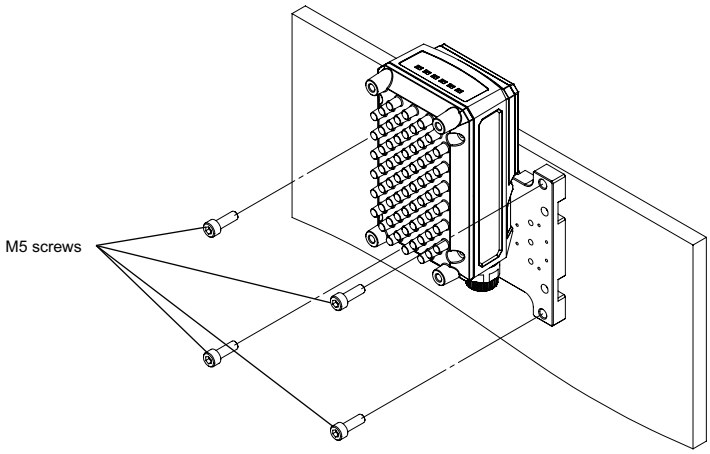

Additional Information

There are screw holes in FHV-XMT-7 for installing a lighting controller. FHV-XMT-7 can be used as a mounting fixture for a lighting controller.

- Screw holes to be used when mounting a lighting controller of the common type (1ch to 4ch).

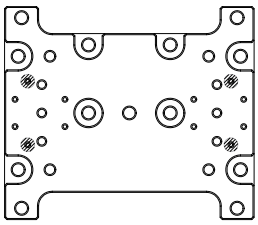

Mounting holes

- Screw holes to be used when mounting a dedicated lighting controller (1ch).

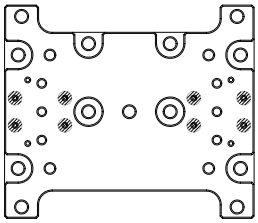

Mounting holes

5-3-2 When Connecting the Smart Camera to a Lighting Controller

For connecting the Smart Camera to a Lighting Controller, use the mounting fixture (FHV-XMT-7-TCC). Do not use the camera mounting plate that is included when purchasing the lighting controller. For attaching, please use the screws that are included with the Lighting controller for that purpose. For details on how to connect the external lighting, refer to the instruction manuals for the lighting controller and external lighting.

Mounting and Attaching

1 Attach the lighting controller mounting fixture (FHV-XMT-7-TCC) to the Smart Camera.
Tightening torque: 2.3 N·m
Screws: M5 × 8 mm countersunk head screw
- When attaching the mounting fixture to the back side:

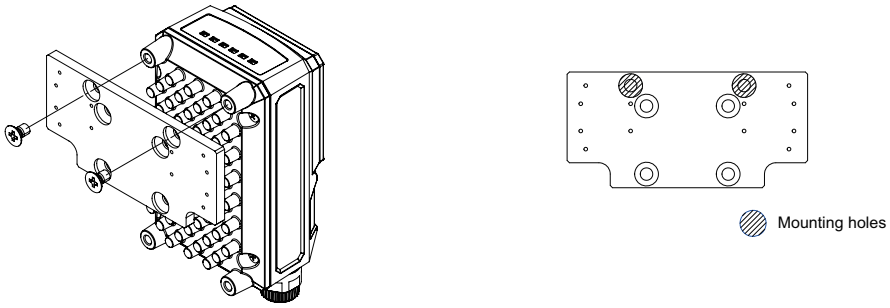

- When attaching the mounting fixture to the front side:

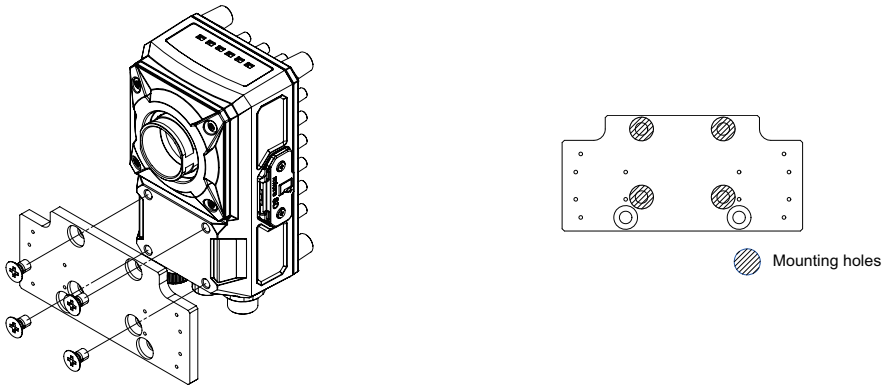

2 Attach the lighting controller.
Tightening torque: 0.15 N·m
Screws: M5 × 8 mm countersunk head screw
- When using FL-TCC1PS and 1ch to 4ch common type of FLV-TCC
  Note: When using FL-TCC1PS, be sure to use the relay cable FHV-VFLX-GD.

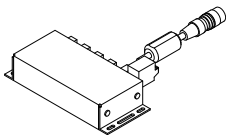

- When attaching the mounting fixture to the back side:

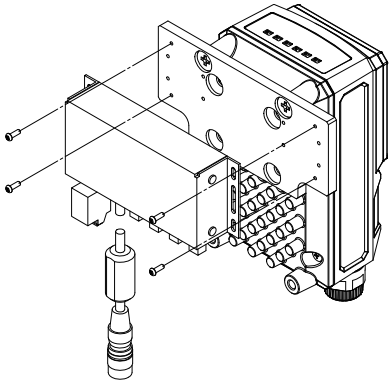

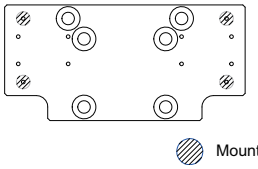

- When attaching the mounting fixture to the front side:

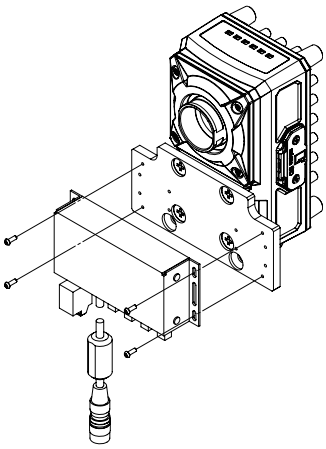

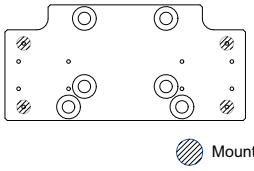

- When using 1ch type of FL-TCC Series

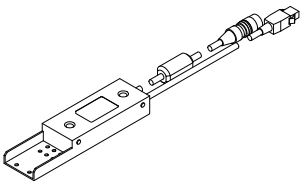

- When attaching the mounting fixture to the back side:

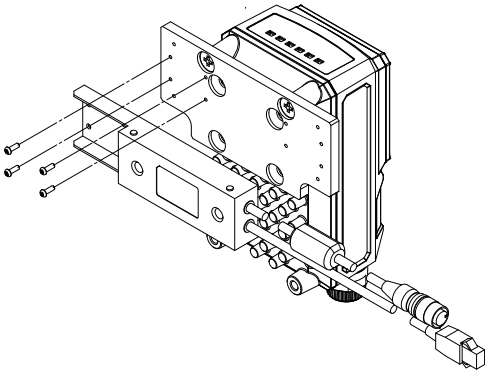

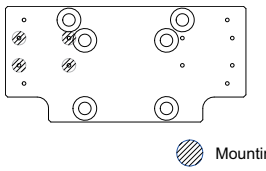

- When attaching the mounting fixture to the front side:

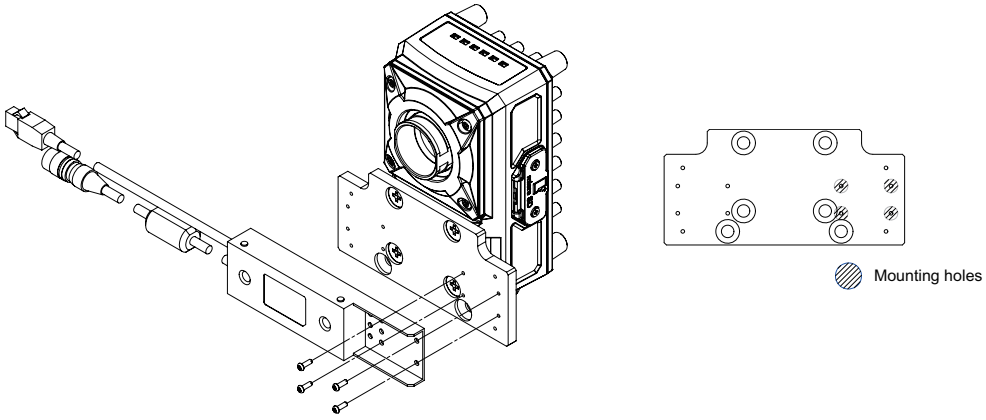
Mounting holes

6

Power Supply and I/O Interface

6-1 When Turning Power ON and OFF 6-2

6-2 Fail-safe Measures 6-4

6-3 Precautions for I/O Interface 6-5

6-4 I/O Cable Interface (Power Supply, I/O, RS-232C) 6-6

6-4-1 Recommended Power Supply for FHV Series 6-6
6-4-2 Cables 6-7
6-4-3 Pin Layout 6-12
6-4-4 Interface Specifications 6-14
6-4-5 I/O Interface Input / Output Circuit Diagram 6-16
6-4-6 RS-232C Interface 6-18

6-5 Ethernet Interface 6-19

6-5-1 Cables 6-20
6-5-2 Pin Layout 6-24

6-6 Interface for the Data Unit for Smart Camera 6-25

6-6-1 Cables / I/O Connectors, and Terminals 6-26
6-6-2 Pin Layout 6-28
6-6-3 Parallel Interface Specifications 6-32
6-6-4 I/O Interface Input/Output Circuit Diagrams 6-34
6-6-5 EtherCAT Interface Specifications (FHV-SDU30) 6-36

6-7 Inserting and Removing the MicroSD Card 6-38

6-7-1 How to Insert/Remove the MicroSD Card 6-38

6-1 When Turning Power ON and OFF

⚠ WARNING

Do not connect an AC power source to this product. Doing so could cause electrical shock, or fire.

Do not touch the terminals while the power supply is ON. Doing so could cause electrical shock.

⚠ Caution

Minor burn may occur. Do not touch the case as it is very hot while the product is operating or immediately after the power is turned OFF.

Precautions for Safe Use

Check the following again before turning on the power supply.

- Make sure to use the product with the power supply voltage specified. If a DC voltage exceeding the rating or an AC voltage is applied, the circuit parts may be burnt or exploded.
- Do not connect the power supply with polarity reversed.
- Use a DC power supply with safety measures against high-voltage spikes (safety extra low-voltage circuits on the secondary side).
- Use an independent power source for this product. Do not use a shared power source.
- Never apply more than the rated voltage or AC power supply to this product. It may cause malfunction.
- The recommended power supplies are as follows:
  - When attaching the lighting module, use S8VK-G12024 (OMRON) or S8VS-12024 (OMRON).
  - When not attaching the lighting module, use S8VK-G06024 (OMRON) or S8VS-06024 (OMRON).
- Make sure that wiring for this product is separated from high-voltage lines and other power lines. If the same wiring or the same duct is used, there may be electrical induction, causing malfunction or damage.
- Do not short-circuit the load with the open collector output.
- Apply load not exceeding the rating.
- When wiring, attach a crimp terminal of the specified size. Do not connect wires simply twisted together to the power supply or terminal block directly.
- Do not stress cables or connectors.
- Cut off unnecessary signal wires so that they do not contact any other signal wires.
  If the RS-232C IN, RS-232C out, RS-232C, NC, or RS-232C 0V touches 24 VDC, COMIN, or COMOUT, it may cause damage or malfunction.
- Before turning on the power supply, check whether there is incorrect connection such as power supply error, load short circuit, etc., and that there is the proper load current and FG connection. Malfunction, or damage may occur due to incorrect wiring etc.

Precautions for Safe Use

Grounding

- The smart camera casing and grounding wire of the input output cable must be grounded according to Class D grounding (grounding resistance of 100Ω or less).
- Be sure to apply Class D grounding (100Ω or lower grounding resistance) to the ground wire of the SDU body.
- Do not share the ground wire with other equipment or connect it to the beams of the building. It could be adversely affected.
- Keep the ground line as short as possible by setting the grounding point as close as possible.
- The FHV body enclosure, the I/O connector enclosure, the Ethernet connector enclosure, and the lighting connector enclosure are all at the same potential (FG) and are connected to 0V via a capacitor and a resistor in the internal circuit.
- When connecting to a PLC, or other external device, ensure that FG of the smart camera and the FG of the external device are grounded so as to have the same electric potential. Depending on the grounding method, a potential difference may occur between the smart camera and the external device, which may result in equipment failure, or malfunction.
- When the positive (+) terminal of 24 VDC power supply is grounded.
  - Inside of an external device, the shell of an Ethernet connector and SG should not be connected. [(1)]
  - Inside of an external device, 0V and FG should not be connected. [(2)]
  Since FG and 0V will make short-circuit like below diagram, do not ground the positive (+) terminal.

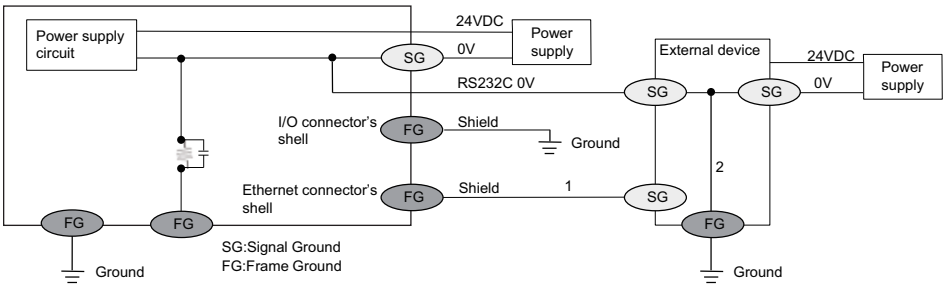

Precautions for Correct Use

Power Supply and Wiring

- If there is a surge on the power supply line, please use a surge absorber, depending on the usage environment it is connected in.
- If using an I/O cable 20 m long, confirm that the power supply output is 24 VDC or higher. If it is lower than 24 VDC, the product does not operate.
- Do not turn off the power while saving data to the smart camera. Doing so causes the data in the memory to be corrupted, resulting in the product not operating properly upon the next start-up.
- Before turning power OFF, confirm that data save processing is completed according to the following guidelines.
  -When the data save process is performed by operation on the smart camera: The data save process is completed and the next operation is enabled.
  -When the data save process is executed by a communication command: Processing of the corresponding command has been completed and BUSY is OFF.
- When touching a terminal part or a signal wire in a connector, take anti-static measures using a wrist strap or another device to prevent damage from static electricity.
- Do not turn OFF the power while any message is displayed indicating that a task is in progress. Doing so causes the data in the memory to be corrupted, resulting in the product not operating properly upon the next start-up.
- After turning off the power, wait at least 1 second before restarting.

6-2 Fail-safe Measures

⚠ WARNING

Please take external safety measures to ensure safety for the system as a whole should any failure or error occur on the smart camera due to external factors. An abnormal equipment operation could result in a serious accident.

Please take fail-safe measures in preparation for any abnormal signal due to signal conductor disconnection and/or momentary power failure. An abnormal equipment operation could result in a serious accident.

Precautions for Safe Use

- If you intend to operate a stage and/or a robot using a measurement result from the smart camera (e.g. axis movement amount output based on calibration/alignment measurement), always take safety measures before operation so that measurement results are re-checked by the stage or robot to be within its range of movement.

Precautions for Correct Use

Fail-Safe Measures

- When controlling stages and robots using the measurement results from the smart camera (axis movement output based on calibration and alignment measurement), always take fail-safe measures within the stage and robot systems, such as checking whether the data obtained from the measurement results is within the range of movement of the stages and robots.
- Additionally, in setting up the smart camera, use the Calculation and Branch processing items in the smart camera software to configure a check flow (such as *“data should not be externally output if the data is in a range from-XXXXX to XXXXX”*) based on the range of movement of the stage or robot.

6-3 Precautions for I/O Interface

Precautions for Safe Use

- Use only the cables designed specifically for the product. Use of other cables may result in malfunction or damage to the product.
- Always turn OFF the power to the Smart Camera before connecting or disconnecting a cable. Connecting the cable while power is being supplied may result in damage to the camera or peripheral devices.
- Do not apply torsion stress to the cable. It may damage the cable.
- Secure the minimum bending radius of the cable. Otherwise, the cable may be damaged.

Precautions for Correct Use

- Check the following items on the communications cables that are used in the network.
  - Are there any breaks?
  - Are there any shorts?
  - Are there any connector problems?
- When you connect the cable to the communications connectors on devices, firmly insert the communications cable connector until it locks in place.
- Do not lay the communications cables together with high-voltage lines.
- Do not lay the communications cable near devices that generate noise.
- Do not lay the communications cables in locations subject to high temperatures or high humidity.
- Do not lay the communications cables in locations subject to excessive dirt and dust or to oil mist or other contaminants.

6-4 I/O Cable Interface (Power Supply, I/O, RS-232C)

6-4-1 Recommended Power Supply for FHV Series

Consumption current varies depending on the type of lighting module used.
Please use the appropriate one from the table below.

Item	Lighting module, Light, Lighting controller	Power Supply
Recommended Power Supply S8VK S8VS	• With lighting module attached • When connecting the following lighting controllers without external power supply - FLV-TCC1 - FLV-TCC4 - FLV-TCC3HB • When connecting the following lights or lighting controller - FL-TCC1 - FLV-TCC1EP	S8VK-G12024 S8VS-12024
	For other than the above	S8VK-G06024 S8VS-06024

6-4-2 Cables

Please use the following I/O cables.

Name	Model	Description	Note
I/O cable	FHV-VDB2/FHV-VDLB2	FHV series only Cable lengths: 2 m, 3 m, 5 m, 10 m, 20 m Minimum bending radius: Fixed use 40 mm, Sliding use 70 mm	• One end of the cable is a connector and other end is non-terminated wires. • Connect with the cable, ensuring not to exceed the minimum bending radius.
	FHV-VDB/FHV-VDLB	FHV series only Cable lengths: 2 m, 3 m, 5 m, 10 m, 20 m Minimum bending radius: Fixed use 54 mm, Sliding use 72 mm	
I/O cable (super bending resistance)	FHV-VDBX2/ FHV-VDLBX2	FHV series only (super bending resistance) Calbe length: 5 m, 10 m Minimum bending radius: 44 mm	
	FHV-VDBX/ FHV-VDLBX	FHV series only (super bending resistance) Calbe length: 2 m, 3 m, 5 m, 10 m Minimum bending radius: 44 mm	

The Super Bend Resistant cables (FHV-V□BX) do not protect against water. (If using them, the IP Protection level for the smart camera will not be IP67, but rather IP60.) If protection against water is required, please use a Super Bend Resistant cable (FHV-V□BX2), or Bend Resistant cable (FHV-V□B2/FHV-V□B).

FHV-VDB2

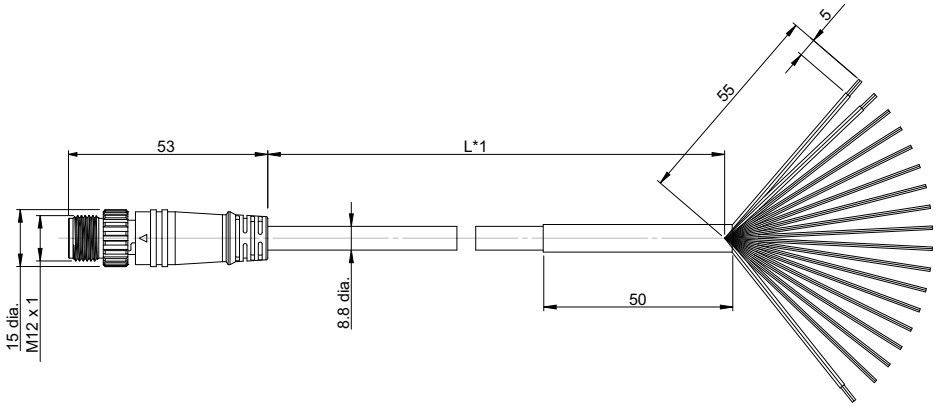

(Unit: mm)

*1. Cable lengths (L) are 2 m/3 m/5 m/10 m/20 m.

FHV-VDLB2

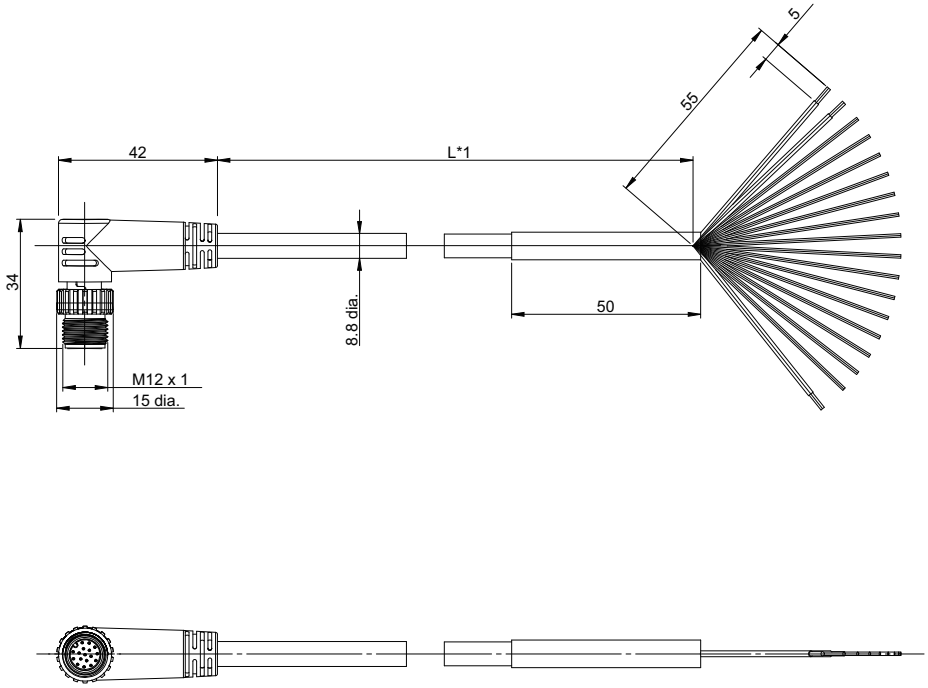

(Unit: mm)

*1. Cable lengths (L) are 2 m/3 m/5 m/10 m/20 m.

FHV-VDB

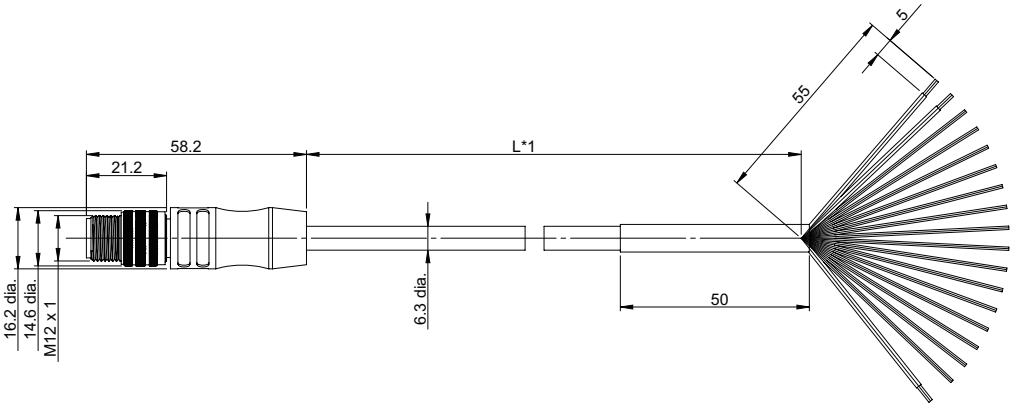

(Unit: mm)

*1. Cable lengths (L) are 2 m/3 m/5 m/10 m/20 m.

FHV-VDLB

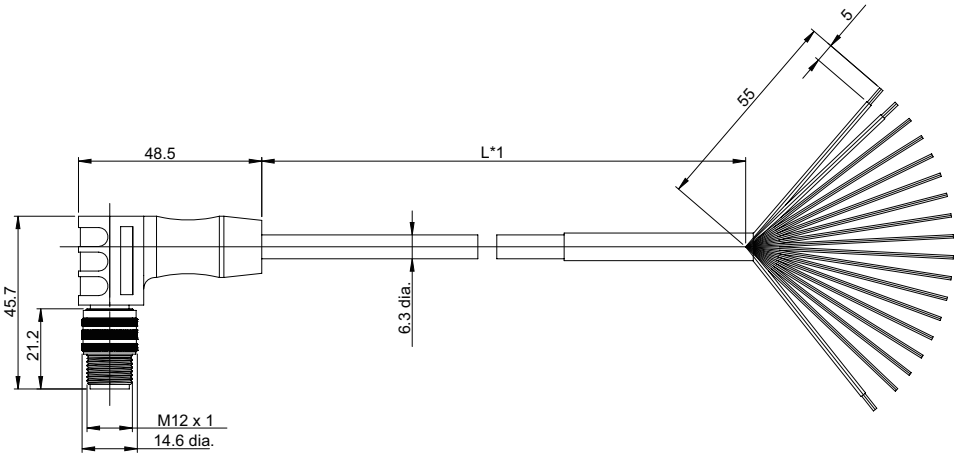

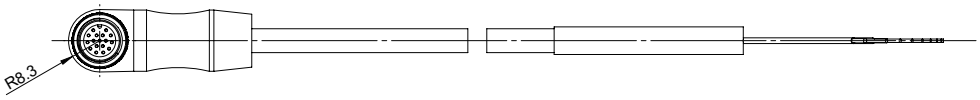

(Unit: mm)

*1. Cable lengths (L) are 2 m/3 m/5 m/10 m/20 m.

FHV-VDBX2

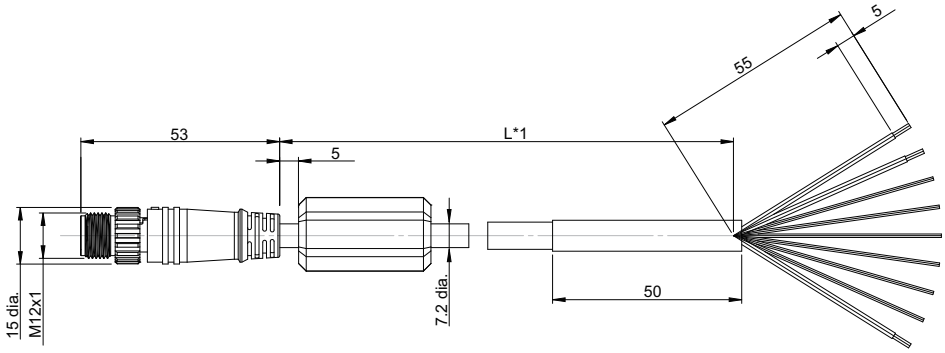

(Unit: mm)

*1. Cable lengths (L) are 5 m/10 m

FHV-VDLBX2

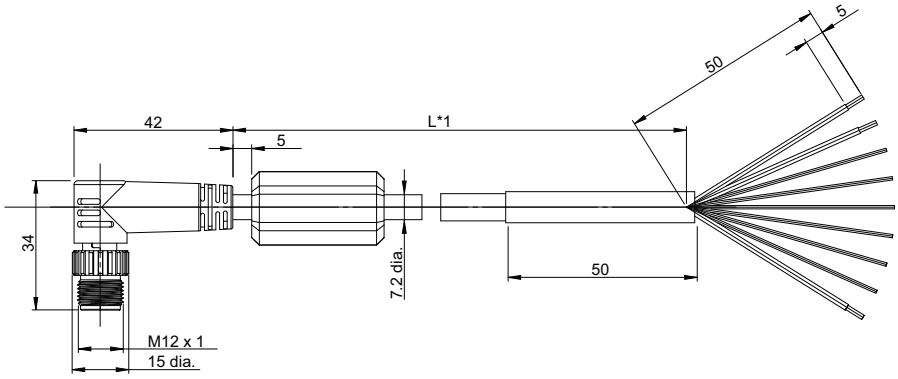

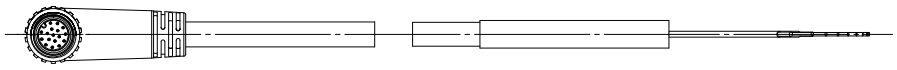

(Unit: mm)

*1. Cable lengths (L) are 5 m/10 m

FHV-VDBX

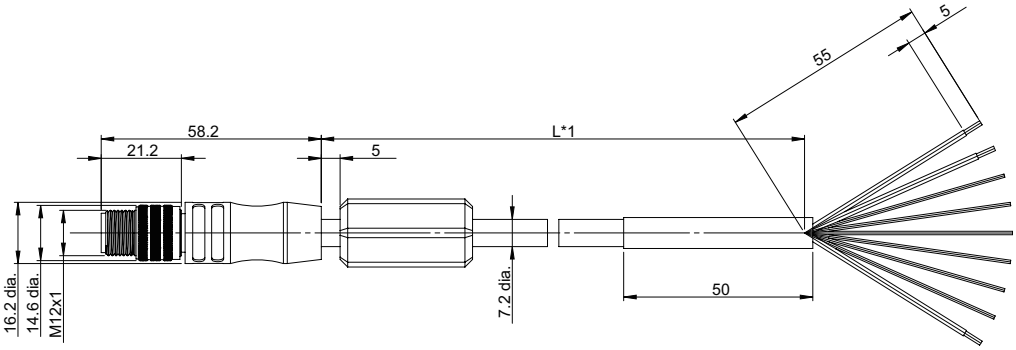

(Unit: mm)

*1. Cable lengths (L) are 2 m/3 m/5 m/10 m

FHV-VDLBX

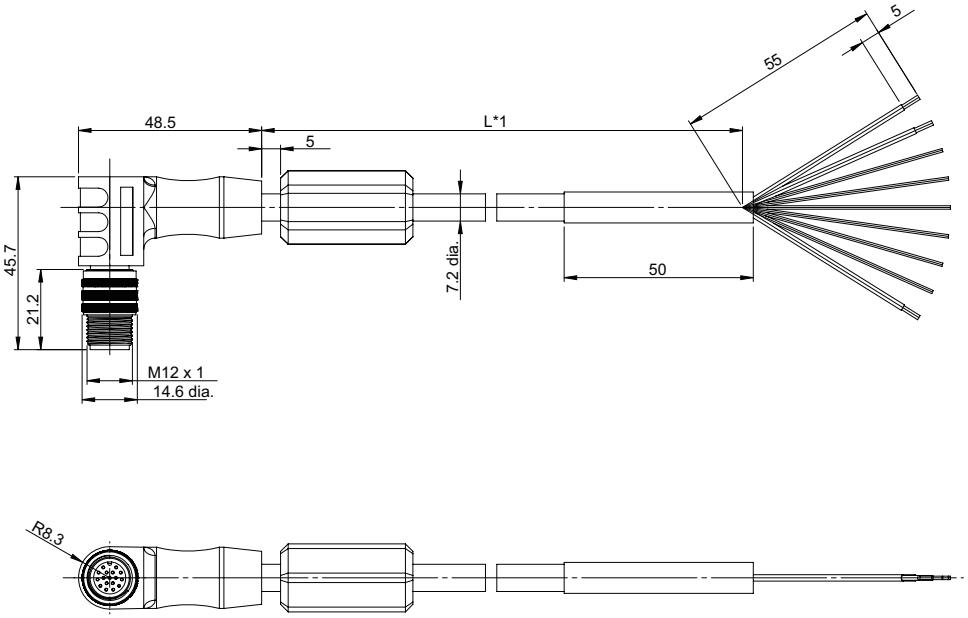

(Unit: mm)

*1. Cable lengths (L) are 2 m/3 m/5 m/10 m

6-4-3 Pin Layout

- FHV-VDB2/FHV-VDLB2/FHV-VDB/FHV-VDLB

Wire Color	Stripe	Part		Signal Name	Function
Brown (Heavy gauge)	None	Power supply	-	24 VDC	External power supply (24VDC)
Blue (Heavy gauge)	None		-	0V	
Black (Heavy gauge)	None	Ground	-	FG	Ground
White	Yes	I/O	-	COMIN	Common for input signals
Pink	Yes		-	COMOUT	Common for output signals
Orange	None		OUT	ERROR	ON when there is an error
White	None		OUT	OR	Overall Judgement Result
Yellow	None		OUT	BUSY	Processing in progress
Purple	None		OUT	READY	ON when Image input is allowed
Black	None		OUT	STGOUT/ SHTOUT	STGOUT: Strobe trigger signal SHTOUT: Shutter output signal Factory default is STGOUT. It can be assigned to SHTOUT.
Red	None		IN	DI2	Serial Data *1 DI7 (Run) during operation.
Green	None		IN	DI1	Command input signal
Gray	None		IN	DI0	Command input signal
Pink	None		IN	STEP	Measurement trigger input
Green	Yes	RS-232C	OUT	RS-232C OUT	RS-232C transmission data (do not touch other power lines, grounding lines, and signal lines.)
Purple	Yes		IN	RS-232C IN	RS-232C reception data (do not touch other power lines, grounding lines, and signal lines.)
Light blue	Yes		-	RS-232C 0V	RS-232C GND (do not touch other power lines, grounding lines, and signal lines.)
Yellow	Yes	-	-	NC	Not used (do not touch other power lines, grounding lines, and signal lines.)

- FHV-VDBX2/FHV-VDLBX2/FHV-VDBX/FHV-VDLBX

Wire Color	Stripe	Part		Signal Name	Function
Brown (Heavy gauge)	None	Power suply	-	24 VDC	External power supply (24VDC)
Blue (Heavy gauge)	None		-	0V	

Wire Color	Stripe	Part		Signal Name	Function
Black (Heavy gauge)	None	Ground	-	FG	Ground
White	Yes	I/O	-	COMIN	Common for input signals
Pink	Yes		-	COMOUT	Common for output signals
White	None		OUT	OR	Overall Judgment Result
Purple	None		OUT	READY	ON when Image input is allowed
Black	None		OUT	STGOUT/ SHTOUT	STGOUT: Strobe trigger signal SHTOUT: Shutter output signal Factory default is STGOUT. It can be assigned to SHTOUT.
Pink	None		IN	STEP	Measurement trigger input

6-4-4 Interface Specifications

Specifications differ according to the signal type.

[Input]

Signals: DI0, DI1, DI2
Connect to COMIN terminal when using these signals.

Item	Specification
Input voltage	24 VDC±10%
ON current*1	5 mA min.
ON voltage*1	8.8 V min.
OFF current*2	0.5 mA max.
OFF voltage*2	1.1 V max.
ON delay	5 ms max.
OFF delay	0.7 ms max.

*1. ON current / ON voltage
It is the current or voltage that will change the state from OFF to ON. The ON voltage is the potential difference between COM IN and each input terminal.

*2. OFF current / OFF voltage
It is the current or voltage that will change the state from ON to OFF. The ON voltage is the potential difference between COM IN and each input terminal.

Precautions for Correct Use

Chattering measures
Although the Smart Camera has equipped chattering measures function, erroneous inputs by chattering cannot be prevented when chattering occurred for 100 μs or more. (Input signal changes less than 100 μs are ignored. Input signals are determined when the same or higher level is held 100 μs or longer.) We recommend using components with no contact such as SSR or PLC transistor output. When using components with contact like a relay, rebounds of a contact may generate input signals again.

[Input]

Signal: STEP

Connect to COMIN terminal when using this signal.

Item	Specification
Input voltage	24 VDC±10%
ON current*1	5 mA min.
ON voltage*1	8.8 V min.
OFF current*2	0.5 mA max.
OFF voltage*2	0.8 V max.
ON delay	0.1 ms max.
OFF delay	0.1 ms max.

*1. ON current / ON voltage
It is the current or voltage that will change the state from OFF to ON. The ON voltage is the potential difference between COM IN and each input terminal.

*2. OFF current / OFF voltage
It is the current or voltage that will change the state from ON to OFF. The ON voltage is the potential difference between COM IN and each input terminal.

Precautions for Correct Use

Chattering measures
Although the Smart Camera has equipped chattering measures function, erroneous inputs by chattering cannot be prevented when chattering occurred for 100 μs or more. (Input signal changes less than 100 μs are ignored. Input signals are determined when the same or higher level is held 100 μs or longer.) We recommend using components with no contact such as SSR or PLC transistor output. When using components with contact like a relay, rebounds of a contact may generate input signals again.

[Output]

Signal: READY, BUSY, OR, and ERROR

Connect to the COMOUT terminal when using these signals.

Signal: STGOUT, SHTOUT

Connect to the COMIN and COMOUT terminals when using these signals.

Item	Specification
Output voltage	24 VDC±10%
Load current*1	45 mA max.
ON residual voltage	2 V max.
OFF leakage current	0.2 mA max.

*1. Please use a load current at or below the specified value for current. Exceeding the specified current may cause damage of the output circuit.

6-4-5 I/O Interface Input / Output Circuit Diagram

The I/O interface is a combined use type for NPN/PNP. Wire appropriately according to the external device specifications.

[Input]

Signal

- DI0 to DI2
  Connect to COMIN when using these signals.

a) Internal specifications for NPN connection

Item	Specifications
Internal circuit diagram	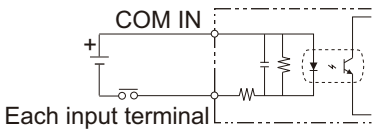

b) Internal specifications for PNP connection

Item	Specification
Internal circuit diagram	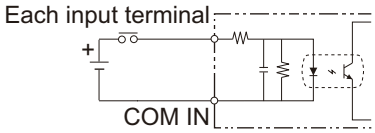

[Input]

Signal

- STEP
  Connect to COMIN when using this signal.

a) Internal specifications for NPN connection

Item	Specifications
Internal circuit diagram	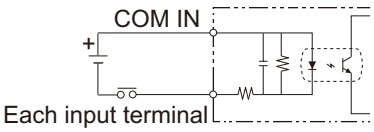

b) Internal specifications for PNP connection

Item	Specification
Internal circuit diagram	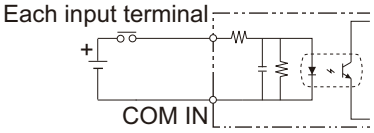

[Output]

Signal

- READY, BUSY, OR, and ERROR
  Connect to COMOUT when using these signals.

a) Internal specifications for NPN connection

Item	Specification
Internal circuit diagram	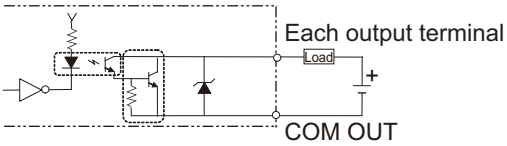

b) Internal specifications for PNP connection

Item	Specification
Internal circuit diagram	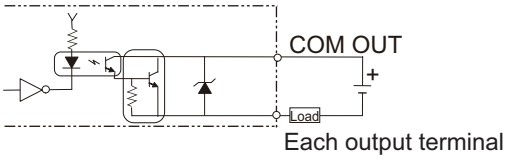

[Output]

Signal

- STGOUT, SHTOUT
  Connect to COMOUT or COMIN when using these signals.

a) Internal specifications for NPN connection

Item	Specification
Internal circuit diagram	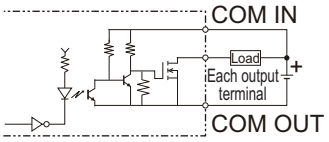

b) Internal specifications for PNP connection

Item	Specification
Internal circuit diagram	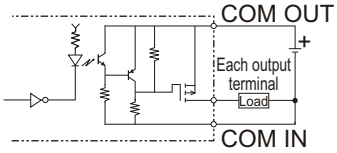

6-4-6 RS-232C Interface

Pin numbers depend on the type of external devices or models to be connected. Refer to manuals for your programmable controller or PC.

Smart Camera		
Signal name	Color	Stripe
RS-232C IN	Violet	Yes
RS-232C OUT	Green	Yes
RS-232C 0V	Pale blue	Yes

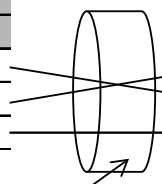

External device to connect	
Pin No.	Signal name
*	RD
*	SD
*	GND

RS/CS control is not allowed.

Use a shielded cable.

6-5 Ethernet Interface

The Ethernet port on the Smart Camera can be used for EtherNet/IP or Serial (Ethernet) communication.

Precautions for Safe Use

- Use only the cables designed specifically for the product. Use of other cables may result in malfunction or damage to the product.
- Always turn OFF the power to the Smart Camera before connecting or disconnecting a cable. Connecting the cable while power is being supplied may result in damage to the camera or peripheral devices.
- Do not apply torsion stress to the cable. It may damage the cable.
- Secure the minimum bending radius of the cable. Otherwise the cable may be damaged.

Precautions for Correct Use

- Check the following items on the communications cables that are used in the network.
  - Are there any breaks?
  - Are there any shorts?
  - Are there any connector problems?
- When you connect the cable to the communications connectors on devices, firmly insert the communications cable connector until it locks in place.
- Do not lay the communications cables together with high-voltage lines.
- Do not lay the communications cable near devices that generate noise.
- Do not lay the communications cables in locations subject to high temperatures or high humidity.
- Do not lay the communications cables in locations subject to excessive dirt and dust or to oil mist or other contaminants.

6-5-1 Cables

Please use the following Ethernet cables.

Name	Model	Description	Note
Ethernet cable	FHV-VNB2/FHV-VNLB2	For FHV series only Cable lengths: 2 m, 3 m, 5 m, 10 m, 20 m Minimum bending radius: Fixed 35 mm, Sliding 50 mm	• Connect with the cable, ensuring not to exceed the minimum bending radius.
	FHV-VNB/FHV-VNLB	For FHV series only Cable lengths: 2 m, 3 m, 5 m, 10 m, 20 m Minimum bending radius: Fixed 35 mm, Sliding 70 mm	
Ethernet cable (super bending resistance)	FHV-VNBX2/ FHV-VNLBX2	For FHV series only Cable length: 5 m, 10m Minimum bending radius: 40 mm	
	FHV-VNBX/ FHV-VNLBX	For FHV series only Cable length: 2 m, 3 m, 5 m, 10m Minimum bending radius: 38 mm	

The Super Bend Resistant cables (FHV-V□BX) do not protect against water. (If using them, the IP Protection level for the smart camera will not be IP67, but rather IP60.) If protection against water is required, please use a Super Bend Resistant cable (FHV-V□BX2), or Bend Resistant cable (FHV-V□B2/FHV-V□B).

FHV-VNB2

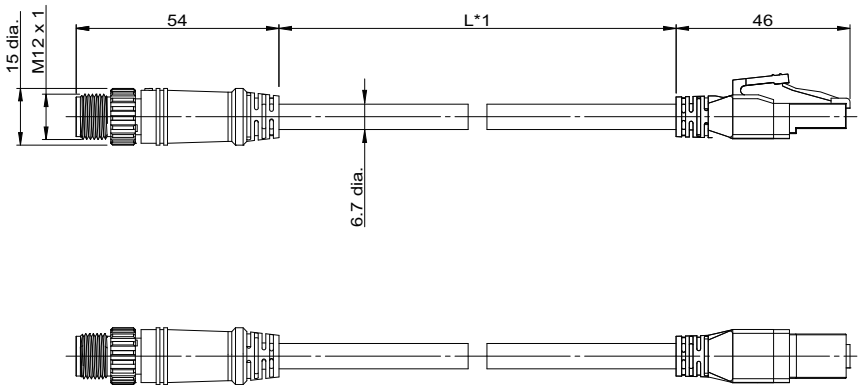

(Unit: mm)

*1. Cable lengths (L) are 2m/3m/5m/10m/20m.

FHV-VNLB2

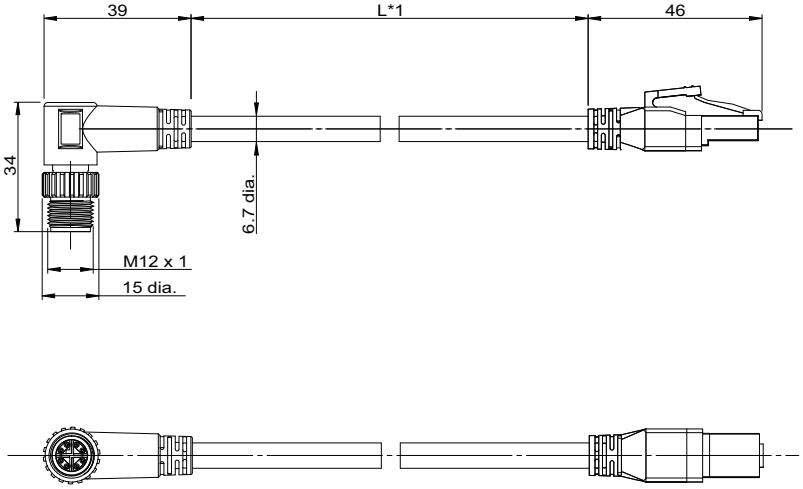

(Unit: mm)

*1. Cable lengths (L) are 2m/3m/5m/10m/20m.

FHV-VNB

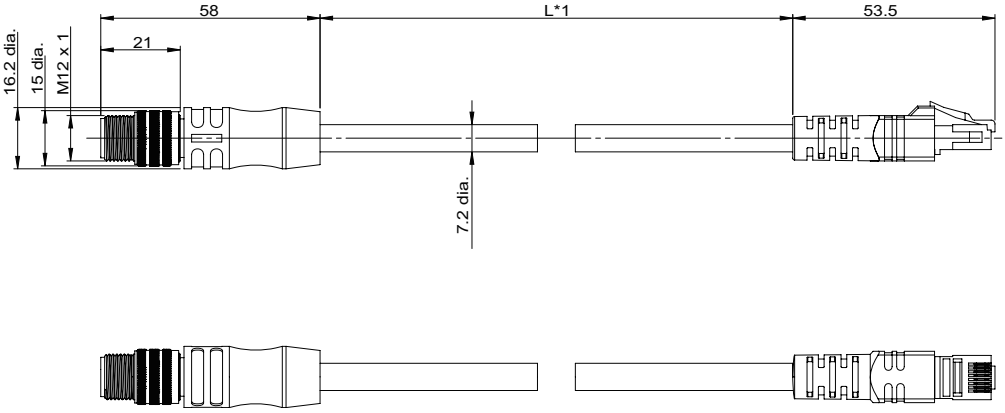

(Unit: mm)

*1. Cable lengths (L) are 2m/3m/5m/10m/20m.

FHV-VNLB

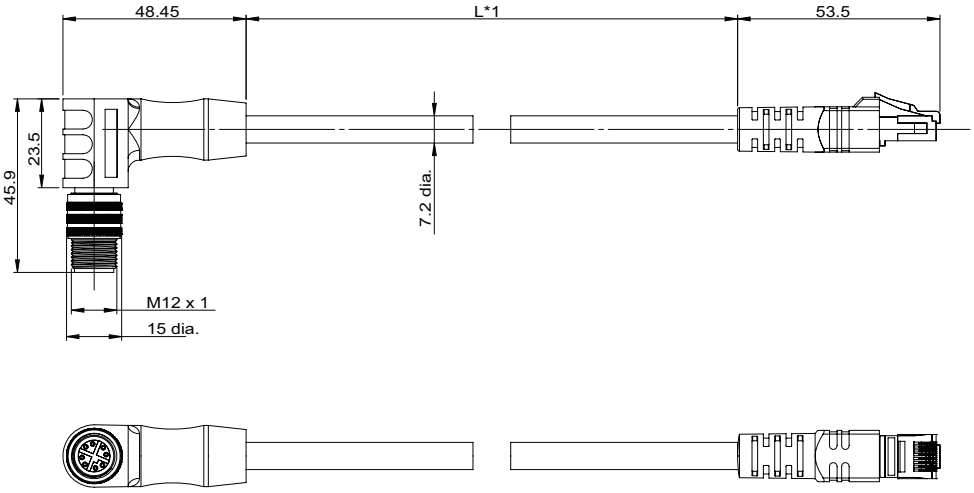

(Unit: mm)

*1. Cable lengths (L) are 2m/3m/5m/10m/20m.

FHV-VNBX2

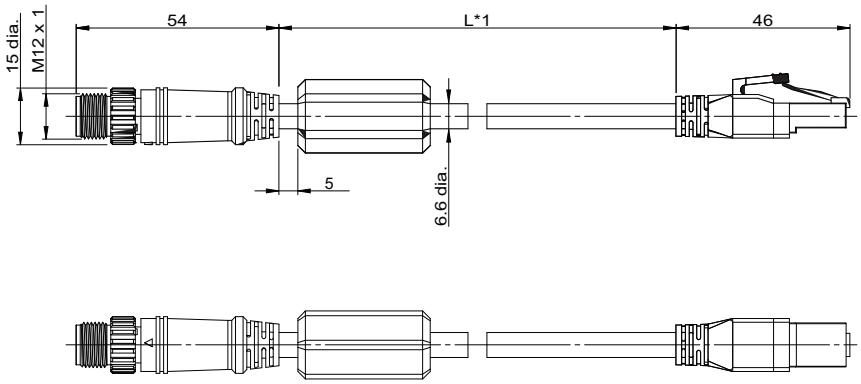

(Unit: mm)

*1. Cable lengths (L) are 5m/10m

FHV-VNLBX2

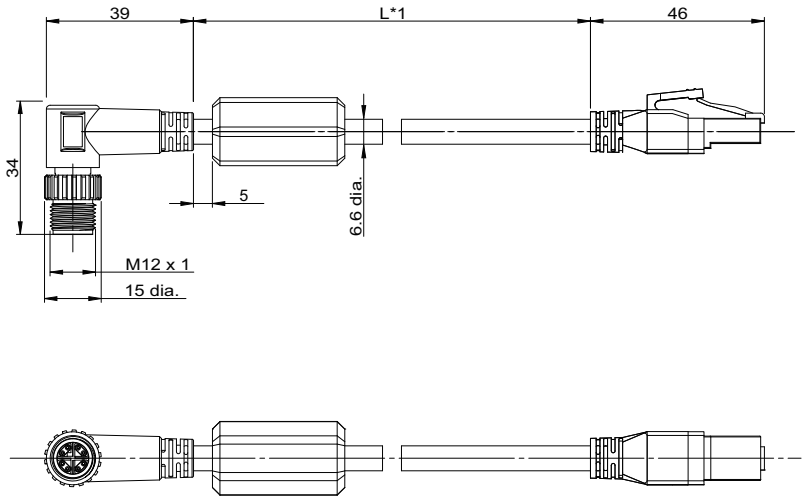

(Unit: mm)

*1. Cable lengths (L) are 5m/10m

FHV-VNBX

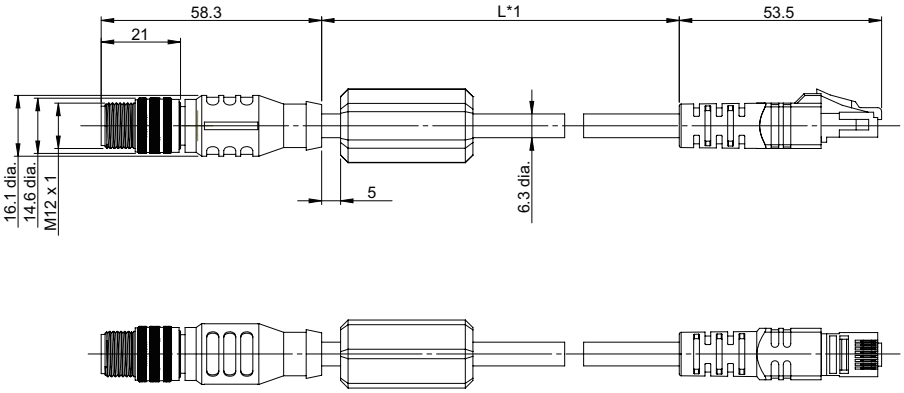

(Unit: mm)

*1. Cable lengths (L) are 2m/3m/5m/10m

FHV-VNLBX

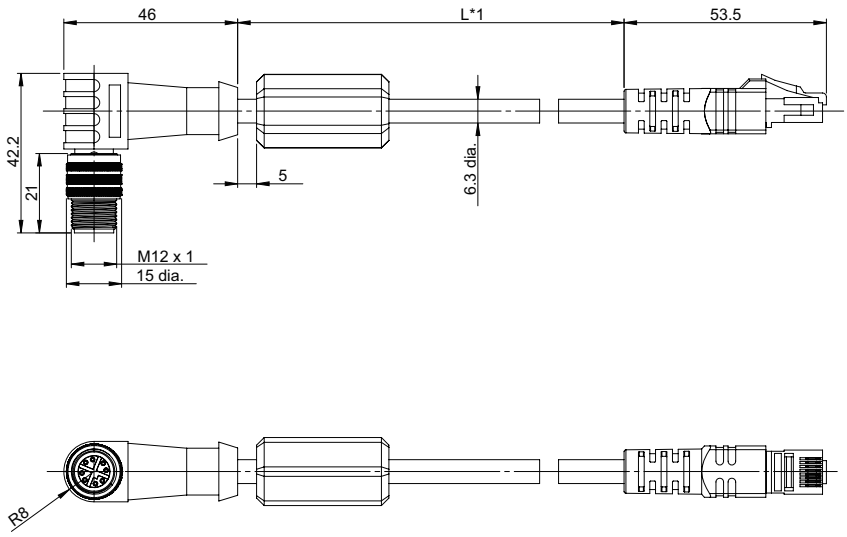

(Unit: mm)

*1. Cable lengths (L) are 2m/3m/5m/10m

6-5-2 Pin Layout

10BASE-T / 100BASE-T

RJ45	Pin No. (RJ45)	Signal name	Abbr.	Signal direction	Pin No. (M12)	M12
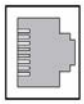	1	Transmit data +	TD+	Output	1	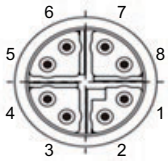
	2	Transmit data -	TD-	Output	2	
	3	Received data +	RD+	Input	3	
	4	Not used	-	-	8	
	5	Not used	-	-	7	
	6	Received data-	RD-	Input	4	
	7	Not used	-	-	5	
	8	Not used	-	-	6	

1000Base-T

RJ45	Pin No. (RJ45)	Signal name	Abbr.	Signal direction	Pin No. (M12)	M12
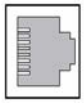	1	Communication data DA +	BI_DA +	Output	1	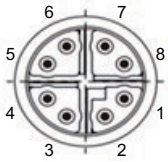
	2	Communication data DA -	BI_DA -	Output	2	
	3	Communication data DB +	BI_DB +	Input/Output	3	
	4	Communication data DB -	BI_DB -	Input/Output -	8	
	5	Communication data DC +	BI_DC +	Input/Output	7	
	6	Communication data DC-	BI_DC -	Input/Output	4	
	7	Communication data DD+	BI_DD +	Input/Output	5	
	8	Communication data DD-	BI_DD -	Input/Output	6	

6-6 Interface for the Data Unit for Smart Camera

Precautions for Safe Use

- Use only the cables designed specifically for the product. Use of other cables may result in malfunction or damage to the product.
- Always turn OFF the power to the Smart Camera before connecting or disconnecting cables. Connecting cables while the power is being supplied may result in damage to the camera or peripheral devices.
- Do not apply torsional stress to the cable. Doing so may cause cable breakage.
- Secure the minimum bending radius of the cable. If it cannot be secured, the cable may be broken.

Precautions for Correct Use

- Check the following items on the communications cables that are used in the network.
  - Are there any breaks?
  - Are there any shorts?
  - Are there any connector problems?
- When you connect communication cables to the communication connectors on devices, firmly insert the communication cable connectors until it locks in place.
- Do not lay the communication cables together with high-voltage lines.
- Do not lay the communication cables near devices that generate noise.
- Do not lay the communication cables in locations subject to high temperatures or high humidity.
- Do not lay the communication cables in locations subject to excessive dirt and dust or to oil mist or other contaminants.

6-6-1 Cables / I/O Connectors, and Terminals

Use the following cables for the data unit.

Name	Model	Description	Note
Cable for Data unit	FHV-VUB2 / FHV-VULB2	FHV series only Cable length: 2 m, 3 m, 5 m, 10 m, 20 m Minimum bending radius Fixed use: 40 mm, Sliding use: 65 mm	• Connect with the cable, ensuring not to exceed the minimum bending radius.
	FHV-VUB / FHV-VULB	FHV series only Cable length: 2 m, 3 m, 5 m, 10 m, 20 m Minimum bending radius: 47 mm	
Cable for Data unit (super bending resistance)	FHV-VUBX2 / FHV-VULBX2	FHV series only (super bending resistance) Cable length: 5 m, 10 m Minimum bending radius: 47 mm	
	FHV-VUBX / FHV-VULBX	FHV series only (super bending resistance) Cable length: 2 m, 3 m, 5 m, 10 m Minimum bending radius: 47 mm	

The Super Bend Resistant cables (FHV-V□BX) do not protect against water. (If using them, the IP Protection level for the smart camera will not be IP67, but rather IP60.) If protection against water is required, please use a Super Bend Resistant cable (FHV-V□BX2), or Bend Resistant cable (FHV-V□B2/FHV-V□B).

Use the following special parallel I/O cables for FHV-SDU10.

Name	Model	Description	Note
Parallel I/O cable	XW2Z-S013-□	FH/FHV series only Cable length: 2 m, 5 m Minimum bending radius: 10 mm	• Using all I/O signals requires two of this cable. • One end of the cable is a connector and other end is flat cable. • Connect with the cable, ensuring not to exceed the minimum bending radius. • □ in the model name, the cable length is indicated. (2 = 2 m and 5 = 5 m)
Parallel I/O cable for the conversion unit for connector terminal block	XW2Z-□□□EE	FH/FHV series only Cable length: 0.5 m, 1 m, 1.5 m, 2 m, 3 m, 5 m Minimum bending radius: 83.2 mm	• Using all I/O signals requires two of this cable. • Connect with the cable, ensuring not to exceed the minimum bending radius. • □ in the model name, the cable length is indicated. (050 = 0.5 m, 100 = 1 m, 150 = 1.5 m, 200 = 2 m, 300 = 3 m, 500 = 5 m) • Terminal Blocks Recommended Products: OMRON XW2K-34G-T
Ultra-Compact Interface Wiring System (General-Purpose)	XW2K-34G-T	-	Refer to the *XW2K Series Datasheet (Cat. No. G152)* for details.

For the parallel I/O connector for the FHV-SDU30, use electric wires from AWG16 to 24.

- XW2Z-S013-□

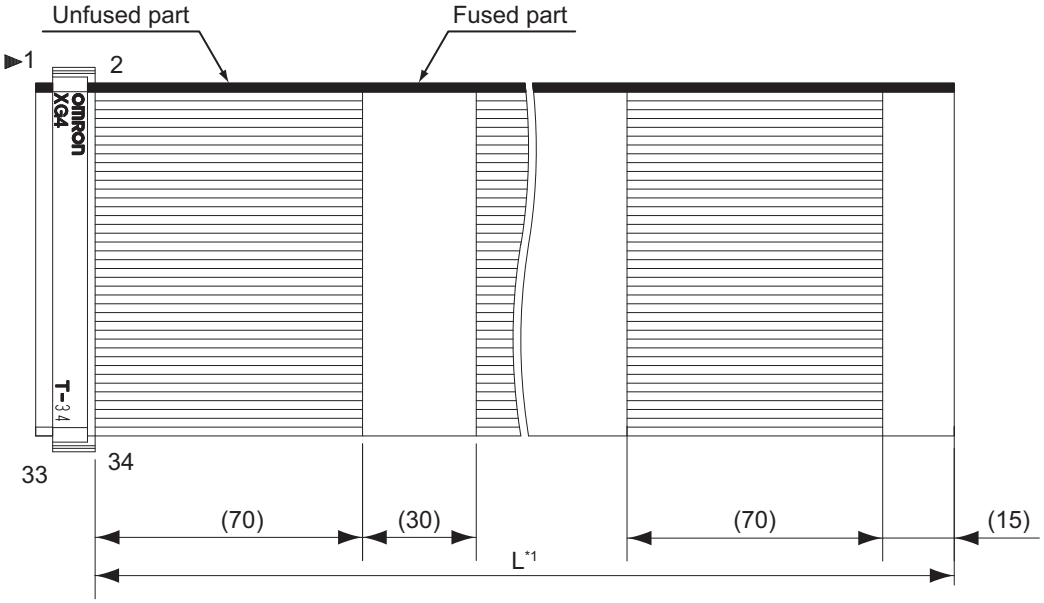

(Unit: mm)

*1. There are two cable lengths (L): 2 m and 5 m

6-6-2 Pin Layout

- FHV-SDU10

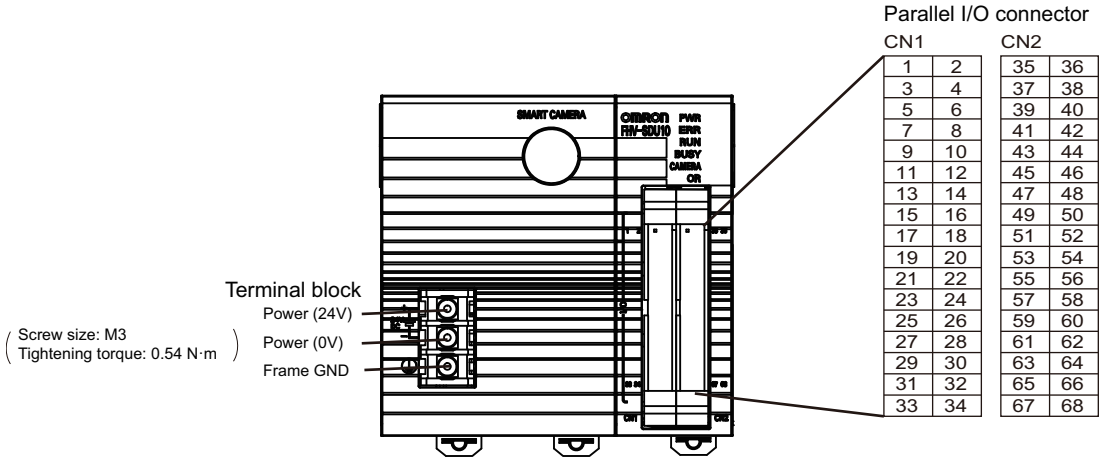

For the power supply lines, use two meters or less in length and AWG14 to 20 in size.

CN1

No.	Signal name	XW2Z-SD13-□ Color	XW2K-34G-T Ultra-Compact Interface Wiring System (General-Purpose)	I/O	COM	Function
1	COMIN0	Red	A1	-	-	Common 0 for input signals
2	COMIN1	Gray	B1	-	-	Common 1 for input signals
3	NC	Gray	A2	-	-	-
4	STEP/ ENCTRIG_Z	Gray	B2	IN	COMIN1	Measurement execution bit / Encoder trigger input phase Z
5	NC	Green	A3	-	-	-
6	NC	Gray	B3	-	-	-
7	NC	Gray	A4	-	-	-
8	ENCTRIG_A	Gray	B4	IN	COMIN0	Encoder trigger input phase A
9	NC	Gray	A5	-	-	-
10	NC	Green	B5	-	-	-
11	NC	Gray	A6	-	-	-
12	NC	Gray	B6	-	-	-
13	ENCTRIG_B	Gray	A7	IN	COMIN0	Encoder trigger input phase B
14	NC	Gray	B7	-	-	-
15	RUN	Green	A8	OUT	COMOUT0	ON when the layout was switched to the specified one.

No.	Signal name	XW2Z-SD13-□ Color	XW2K-34G-T Ultra-Compact Interface Wiring System (General-Purpose)	I/O	COM	Function
16	READY	Gray	B8	OUT	COMOUT0	ON when an image input was allowed.
17	BUSY	Gray	A9	OUT	COMOUT0	Signal for processing in progress
18	OR	Gray	B9	OUT	COMOUT0	Signal for overall judgment results
19	ERROR	Gray	A10	OUT	COMOUT0	ON when an error occurs.
20	STGOUT/ SHTOUT	Green	B10	OUT	COMIN0/ COMOUT1	Strobe trigger output / Exposure completion signal
21	NC	Gray	A11	-	-	-
22	NC	Gray	B11	-	-	-
23	NC	Gray	A12	-	-	-
24	NC	Gray	B12	-	-	-
25	NC	Green	A13	-	-	-
26	NC	Gray	B13	-	-	-
27	NC	Gray	A14	-	-	-
28	NC	Gray	B14	-	-	-
29	NC	Gray	A15	-		
30	NC	Green	B15	-	-	-
31	NC	Gray	A16	-	-	-
32	NC	Gray	B16	-	-	-
33	COMOUT0	Gray	A17	-	-	Common 0 for output signals
34	COMOUT1	Gray	B17	-	-	Common 1 for output signals

CN2

No.	Signal name	XW2Z-SD13-□ Color	XW2K-34G-T Ultra-Compact Interface Wiring System (General-Purpose)	I/O	COM	Function
35	COMIN2	Red	A1	-	-	Common 2 for input signals
36	NC	Gray	B1	-	-	-
37	DSA	Gray	A2	IN	COMIN2	Data Output Request signal
38	NC	Gray	B2	-	-	-
39	DI0	Green	A3	IN	COMIN2	Signal for command input
40	DI1	Gray	B3	IN	COMIN2	Signal for command input

No.	Signal name	XW2Z-SD13-□ Color	XW2K-34G-T Ultra-Compact Interface Wiring System (General-Purpose)	I/O	COM	Function
41	DI2	Gray	A4	IN	COMIN2	Signal for command input
42	DI3	Gray	B4	IN	COMIN2	Signal for command input
43	DI4	Gray	A5	IN	COMIN2	Signal for command input
44	DI5	Green	B5	IN	COMIN2	Signal for command input
45	DI6	Gray	A6	IN	COMIN2	Signal for command input
46	DI7	Gray	B6	IN	COMIN2	Signal for command input
47	NC	Gray	A7	-	-	-
48	ACK	Gray	B7	OUT	COMOUT2	Command Completion flag
49	GATE	Green	A8	OUT	COMOUT2	Data Output Completion signal
50	NC	Gray	B8		-	-
51	DO0	Gray	A9	OUT	COMOUT2	Data output
52	DO1	Gray	B9	OUT	COMOUT2	Data output
53	DO2	Gray	A10	OUT	COMOUT2	Data output
54	DO3	Green	B10	OUT	COMOUT2	Data output
55	DO4	Gray	A11	OUT	COMOUT2	Data output
56	DO5	Gray	B11	OUT	COMOUT2	Data output
57	DO6	Gray	A12	OUT	COMOUT2	Data output
58	DO7	Gray	B12	OUT	COMOUT3	Data output
59	DO8	Green	A13	OUT	COMOUT3	Data output
60	DO9	Gray	B13	OUT	COMOUT3	Data output
61	DO10	Gray	A14	OUT	COMOUT3	Data output
62	DO11	Gray	B14	OUT	COMOUT3	Data output
63	DO12	Gray	A15	OUT	COMOUT3	Data output
64	DO13	Green	B15	OUT	COMOUT3	Data output
65	DO14	Gray	A16	OUT	COMOUT3	Data output
66	DO15	Gray	B16	OUT	COMOUT3	Data output
67	COMOUT2	Gray	A17	-	-	Common 2 for output signals
68	COMOUT3	Gray	B17	-	-	Common 3 for output signals

■ How to connect the parallel I/O electric wires

1. Insert the tip of a slotted screwdriver to the square part at the left of the green connector.
2. Insert an electric wire meeting the wire requirements to the circle part at the right side of the green connector.
3. Pull out the slotted screwdriver.

■ How to remove the parallel I/O electric wires

1. Insert the tip of a slotted screwdriver to the square part at the left of the green connector.
2. Remove the electric wire from the circle part at the right of the green connector.
3. Pull out the slotted screwdriver.

- FHV-SDU30

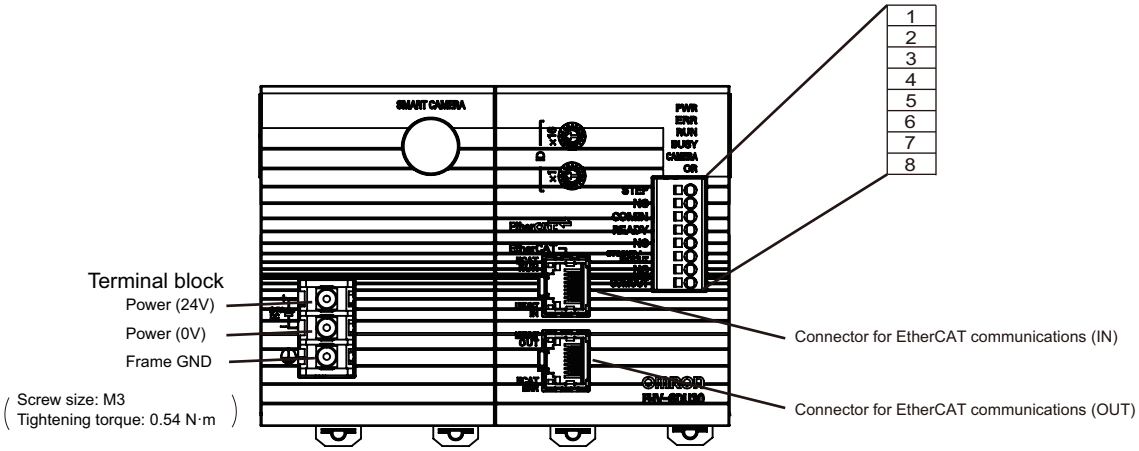

For the power supply lines, use two meters or less in length and AWG14 to 20 in size.

No.	Signal name	COM	I/O	Function
1	STEP	COMIN	IN	Measurement Trigger Input
2	NC	-	-	-
3	COMIN	-	-	-
4	READY	COMOUT	OUT	Image Input Acceptance Output
5	NC	-	-	-
6	STGOUT/SHTOUT	COMIN/COMOUT	OUT	Strobe Trigger Output / Exposure Completion signal
7	NC	-umaho	-	-
8	COMOUT	-	-	-

6-6-3 Parallel Interface Specifications

The parallel interface is a combined use type for NPN/PNP. Wire appropriately according to the external device specifications.
FHV-SDU10 also includes an encoder interface (open collector type).
The encoder interface (open collector type) is ENCTRIG_A, ENCTRIG_B, ENCTRIG_Z. Wire appropriately the corresponding pins to the encoder.

[Input]

Signals:
FHV-SDU10
- No. 37 and No. 39 to 46 pins:

Connect to COMIN2 terminal when using these signals.

Item	Specification
Input voltage	24 VDC±10%
ON current*1	5 mA min.
ON voltage*1	8.8 V min.
OFF current*2	0.5 mA max.
OFF voltage*2	1.1 V max.
ON delay	5 ms max.
OFF delay	0.7 ms max.

*1. ON current / ON voltage
It is the current or voltage that will change the state from OFF to ON. The ON voltage is the potential difference between COM IN and each input terminal.
*2. OFF current / OFF voltage
It is the current or voltage that will change the state from ON to OFF. The ON voltage is the potential difference between COM IN and each input terminal.

Precautions for Correct Use

Chattering measures
Although the Smart Camera has equipped chattering measures function, erroneous inputs by chattering cannot be prevented when chattering occurred for 100 μs or more. (Input signal changes less than 100 μs are ignored. Input signals are determined when the same or higher level is held 100 μs or longer.) We recommend using components with no contact such as SSR or PLC transistor output. When using components with contact like a relay, rebounds of a contact may generate input signals again.

[Input]

Signals:
FHV-SDU10
- No.4 pin:
  Connect to COMIN1 terminal when using this signal.
- No.8 and 13 pins :
  Connect to COMIN0 terminal when using these signals.

FHV-SDU30

- No.1 pin:
  Connect to COMIN terminal when using this signal.

Item	Specification
Input voltage	24 VDC±10%
ON current*1	5 mA min.
ON voltage*1	8.8 V min.
OFF current*2	0.5 mA max.
OFF voltage*2	0.8 V max.
ON delay	0.1 ms max.
OFF delay	0.1 ms max.

*1. ON current / ON voltage
It is the current or voltage that will change the state from OFF to ON. The ON voltage is the potential difference between COM IN and each input terminal.

*2. OFF current / OFF voltage
It is the current or voltage that will change the state from ON to OFF. The ON voltage is the potential difference between COM IN and each input terminal.

Precautions for Correct Use

Chattering measures
Although the Smart Camera has equipped chattering measures function, erroneous inputs by chattering cannot be prevented when chattering occurred for 100 μs or more. (Input signal changes less than 100 μs are ignored. Input signals are determined when the same or higher level is held 100 μs or longer.) We recommend using components with no contact such as SSR or PLC transistor output. When using components with contact like a relay, rebounds of a contact may generate input signals again.

[Output]

Signals:
FHV-SDU10
- No.15 to 19 pins:
  Connect to COMOUT0 terminal when using these signals.
- No.48, 49, and 51 to 57 pins:
  Connect to COMOUT2 terminal when using these signals.
- No.58 to 66 pins:
  Connect to COMOUT3 terminal when using these signals.
- No.20 pin:
  Connect to COMOUT1 and COMIN0 terminals when using this signal.

FHV-SDU30
- No.4 pin:
  Connect to COMOUT terminal when using this signal.
- No.46 pin:
  Connect to COMOUT and COMIN terminals when using this signal.

Item	Specification
Output voltage	24 VDC±10%
Load current*1	45 mA max.

Item	Specification
ON residual voltage	2 V max.
OFF leakage current	0.2 mA max.

*1. Please use a load current at or below the specified value for current. Exceeding the specified current may cause damage of the output circuit.

6-6-4 I/O Interface Input/Output Circuit Diagrams

The I/O interface is a combined use type for NPN/PNP. Wire appropriately according to the external device specifications.

[Input]

Signals:

FHV-SDU10

- No.37 and 39 to 46 pins
  Connect to COMIN2 terminal when using these signals.

a) Internal specifications for NPN connection

Item	Specifications
Internal circuit diagram	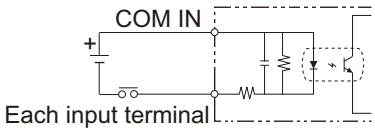

b) Internal specifications for PNP connection

Item	Specifications
Internal circuit diagram	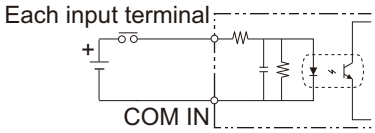

[Input]

Signals:

FHV-SDU10

- No.4 pin
  Connect to COMIN1 terminal when using this signal.
- No.8 and 13 pins
  Connect to COMIN0 terminal when using these signals.

FHV-SDU30

- No.1 pin
  Connect to COMIN terminal when using this signal.

a) Internal specifications for NPN connection

Item	Specifications
Internal circuit diagram	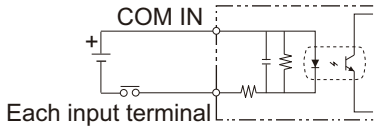

b) Internal specifications for PNP connection

Item	Specification
Internal circuit diagram	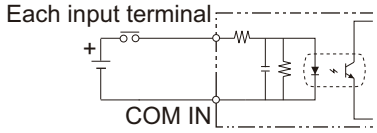

[Output]

Signals:

FHV-SDU10

- No.15 to 19 pins
  Connect to COMOUT0 terminal when using these signals.
- No.48, 49, and 51 to 57 pins
  Connect to COMOUT2 terminal when using these signals.
- No.58 to 66 pins
  Connect to COMOUT3 terminal when using these signals.

FHV-SDU30

- No.4 pin
  Connect to COMOUT terminal when using this signal.

a) Internal specifications for NPN connection

Item	Specifications
Internal circuit diagram	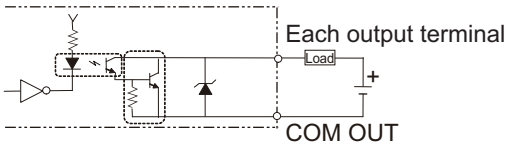

b) Internal specifications for PNP connection

Item	Specifications
Internal circuit diagram	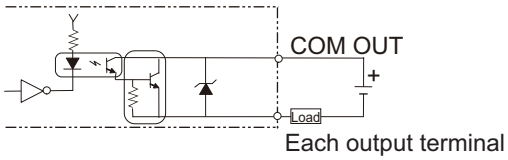

[Output]

Signals:

FHV-SDU10

- No.20 pin
  Connect COMOUT1 and COMIN0 terminals when using this signal.

FHV-SDU30

- No.46 pin
  Connect to COMOUT and COMIN terminals when using this signal.

a) Internal specifications for NPN connection

Item	Specifications
Internal circuit diagram	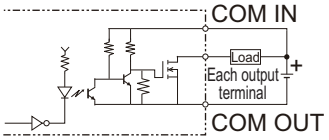

b) Internal specifications for PNP connection

Item	Specifications
Internal circuit diagram	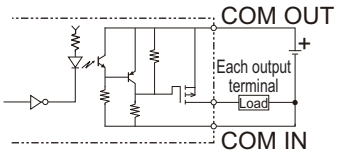

6-6-5 EtherCAT Interface Specifications (FHV-SDU30)

FHV-SDU30 only supports the EtherCAT interface.

Precautions for Safe Use

- Use only the cables designed specifically for the product. Use of other cables may result in malfunction or damage to the product.
- Always turn OFF the power to the Smart Camera before connecting or disconnecting a cable. Connecting the cable while power is being supplied may result in damage to the camera or peripheral devices.
- Do not apply torsion stress to the cable. It may damage the cable.
- Secure the minimum bending radius of the cable. Otherwise the cable may be damaged.

Precautions for Correct Use

- Check the following items on the communications cables that are used in the network.
  - Are there any breaks?
  - Are there any shorts?
  - Are there any connector problems?
- When you connect the cable to the communications connectors on devices, firmly insert the communications cable connector until it locks in place.
- Do not lay the communications cables together with high-voltage lines.
- Do not lay the communications cable near devices that generate noise.
- Do not lay the communications cables in locations subject to high temperatures or high humidity.
- Do not lay the communications cables in locations subject to excessive dirt and dust or to oil mist or other contaminants.

Cables

- Connect straight LAN cables.
- Use STP cables with category 5e or higher which are double-shielded with aluminum tape and braided.
- The cable length is 100 m max. However, some cable does not give warranty for 100 m in length. Generally, when conductors are stranded wires, the transmission performance of them becomes worse than that of single wires, so 100 m in length is not warranted. For more details, check with cable manufacturers.

I/O Connector

- Use RJ45 8-pin moduler connectors (conformance with ISO 8877) with category 5e or higher and shield which are conformance with IEEE 802.3 standard in electrical characteristic.
- When selecting connectors, check that they are fit to cables to be used. As checking items, there are conductor size, single or stranded wires, two or four pairs, and outer diameter.

Pin Layout

Pin assignment	Pin No.	Signal name	Abbr.	Signal direction
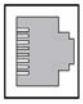	1	Transmit data +	TD +	Output
	2	Transmit data -	TD -	Output
	3	Received data +	RD +	Input
	4	Not used	NC	-
	5	Not used	NC	-
	6	Received data -	RD-	Input
	7	Not used	NC+	-
	8	Not used	NC-	-
	Connector hood	Protective ground	FG	-

Wiring

- Be sure to connect the shield for the cable to the connector hoods in both ends.
- For the connection method, follow the below as T568A style.

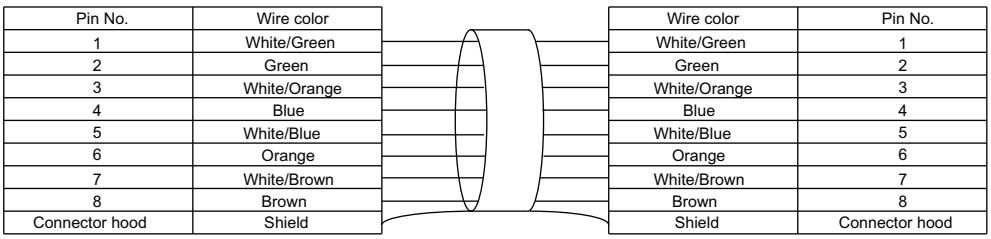

Precautions for Correct Use

Refer to the *Vision System FH/FHV Series User's Manual for Communications Settings (Cat. No. Z342)* for details on how to set up the EtherCAT interface.

6-7 Inserting and Removing the MicroSD Card

Precautions for Correct Use

Handling the microSD card

- When touching a terminal part of the microSD card, antistatic measures such as a wrist strap or others is required.
- Do not insert a microSD card in the reverse direction, at an angle, or in a twisting manner.
- Do not insert or remove the microSD card during measurement, or while data is being loaded from, or written to the card. It could cause data to be corrupted, or adversely affect measurement speed.

When removing the microSD card

- first confirm that no Data Read or Data Write processing is in progress before removing the card.
- When using a microSD card, the SD ACCESS LED on the smart camera flashes while data is being read or written. Make sure that the LED stops flashing before removing the card.
- If any message is displayed on the screen indicating that a task is in progress, do not turn OFF the power.

6-7-1 How to Insert/Remove the MicroSD Card

1 Loosen the screws on the microSD card slot cover and open it.

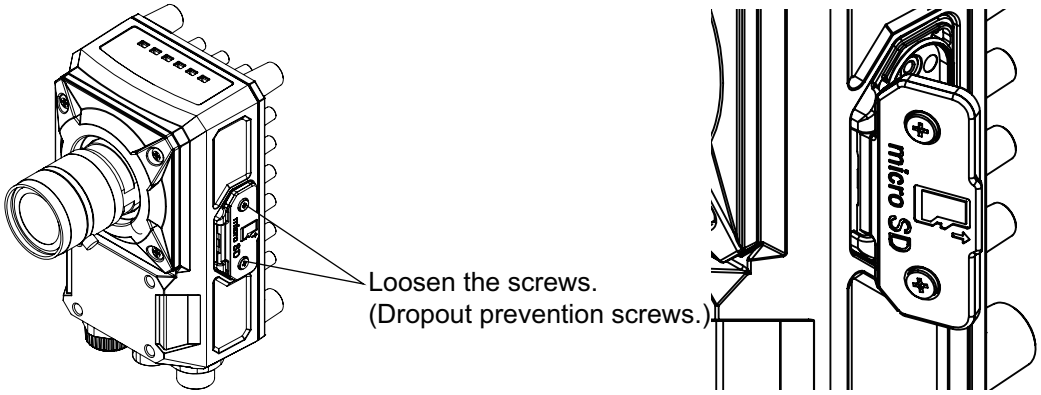

2 Insert/Remove the microSD card.

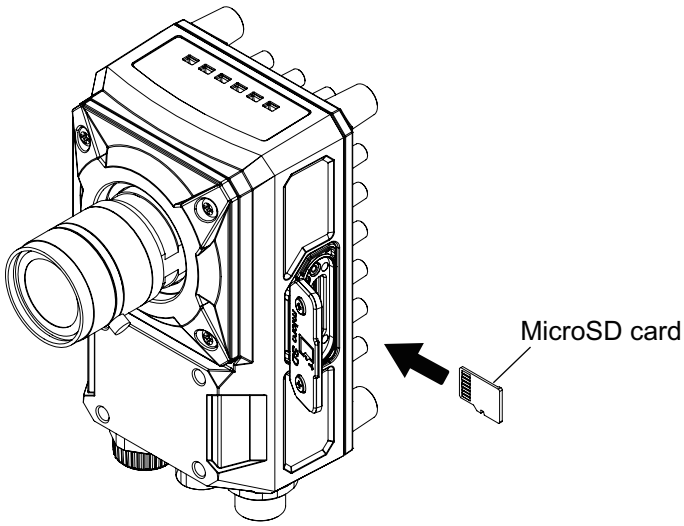

3 Close the cover and tighten the screws.
Recommended tightening torque: 0.15 N·m

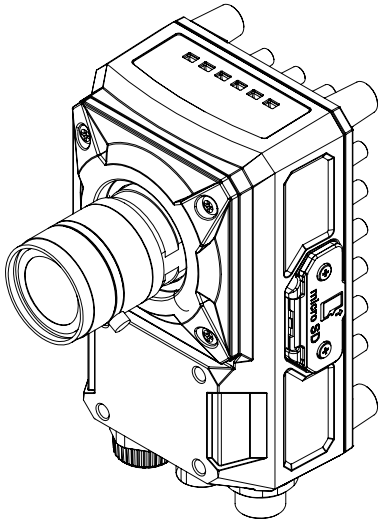

7

Software Setup

Here describes a simulation software, which gives you experiences how to use the Smart Camera functions on your PC. Moreover, this also describes the FH/FHV Launcher to launch the Remote Operation tool and the simulation software.

7-1 Setting up the Software 7-2
- 7-1-1 Recommended Operational Environment 7-2
- 7-1-2 Installation 7-3
- 7-1-3 Windows 7-3
- 7-1-4 Use Procedures 7-5

7-2 Operating the Smart Camera Remotely [Remote Operation Tool] 7-10
- 7-2-1 Summary 7-10
- 7-2-2 Environment Settings 7-11
- 7-2-3 Network Settings for the Remote Operation PC 7-11
- 7-2-4 Network Settings for the Smart Camera 7-12
- 7-2-5 Network Settings for the Smart Camera with Remote Operation Tool 7-14
- 7-2-6 Launching the Remote Operation 7-14
- 7-2-7 Terminating the Remote Operation 7-17

7-3 Using the Simulation Software [Simulation Software] 7-18
- 7-3-1 Introduction 7-18
- 7-3-2 Available Image Formats 7-18
- 7-3-3 Operational Precautions 7-18

7-1 Setting up the Software

To launch the Remote Operation tool or the simulation software, use the FH/FHV Launcher.
The FH/FHV Launcher provides functions below.

- Version selecting function of the simulation software
  Specifies and runs simulation software with a version to use. Specifying a file to use enables the simulation software with the corresponding version to launch.
- Version selecting function of the Remote Operation tool
  Specifies and runs the Remote Operation tool with a version to use. Specifying a file to use enables the Remote Operation tool with corresponding version to Launch.
- Switching function of display language
  Switches the language displayed on the FH/FHV Launcher.

The Remote Operation tool and the simulation software are possible to download with free by doing the member registration after purchasing the Smart Camera. For details, refer to the membership registration sheet packed with the Smart Camera.

7-1-1 Recommended Operational Environment

The recommended operational conditions for the Remote Operation tool, the simulation software, and the FH/FHV Launcher are as follows.

Name	Description
CPU	Intel Pentium Processor (SSE2 or higher)
OS	• Windows 7 Professional (32/64-bit) or Enterprise (32/64-bit) or Ultimate (32/64-bit) • Windows 10 Pro (32/64-bit) or Enterprise (32/64-bit) • Windows 11 Pro (64-bit) or Enterprise (64-bit)
Memory	2GB (3GB or more recommended)
Hard disk space	2GB or more
Display	Resolution: 1280 x 1240 dots or more Color: True Color (32-bit)
Network	10BASE-T (100BASE-TX recommended)

Using the FH/FHV Launcher requires Microsoft .NET Framework 3.5 installed.

7-1-2 Installation

1 Decompress the FH/FHV Launcher to an appropriate folder and click setup.exe.
Install it according to the instructions displayed on the screen.

2 Then decompress the PC software (simulation software and Remote Operation tool) to an appropriate folder and click setup.exe.
Install it according to the instructions displayed on the screen.

Precautions for Correct Use

- A license number registration is required when using them beyond 30 days. For details, refer to *Registering the License* on page 7-8.
- There is both a 32bit and 64bit version of the simulation software. Some functions and processing items are not supported in the 32bit version. Therefore, as much as possible, use simulation software (64bit version) on a 64bit PC to ensure full functionality.
- 32bit and 64bit versions of the same Simulation software revision cannot coexist on the same PC.

7-1-3 Windows

Windows for the FH/FHV Launcher consists of the simulation window / Remote Operation tool window and language setting window. Here describe the FH/FHV Launcher windows and name of each part.

Simulation Software Window and Remote Operation Tool Window

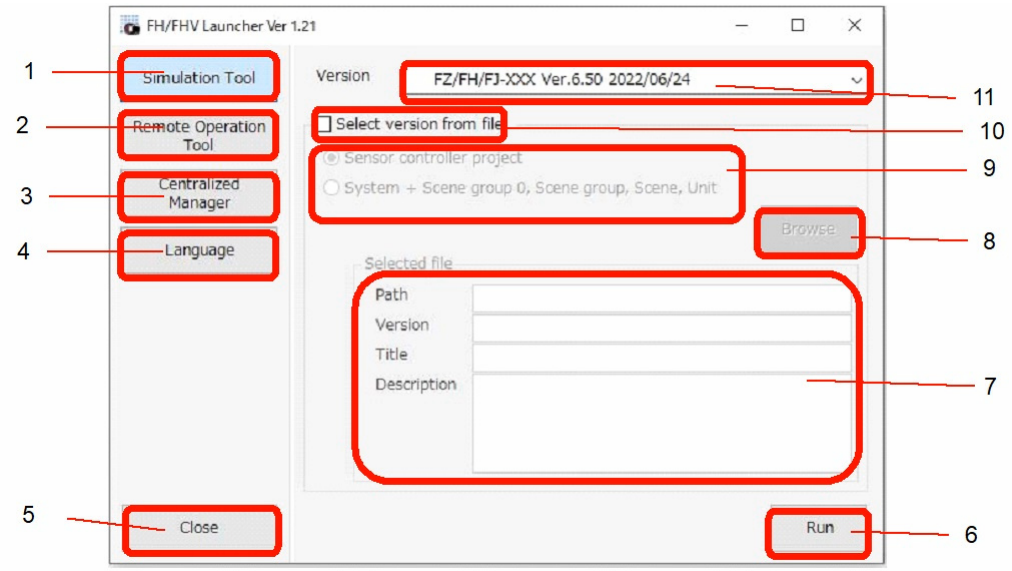

No.	Name	Description
1	Simulation Tool	Displays the simulator startup window.
2	Remote Operation Tool	Displays the remote operation tool window

No.	Name	Description
3	Centralized Manager Tool	Displays the Centralized Manager Tool window. For details, refer to *Collectively Change the Settings of Multiple Sensor Controllers [CentralizedManager]*in the *Vision System FH/FHV Series User's Manual (Cat. No. Z365)*.
4	Language	Displays the language setting window. For details, refer to *Language Setting Window* on page 7-4.
5	Close	Exits FH/FHV Launcher.
6	Run	Launches the selected version of the simulation software or the Remote Operation tool or the Centralized Manager Tool.
7	File information display	Displays the selected file information. When selecting *system + Scene group 0*, Title and Description are not displayed.
8	Browse	Selects a file to check the version.
9	File selection	Selects a file type to check the version.
10	Select version from file	Check the version of software to run by specifying a file.
11	Combo box for version	Displays all versions installed as a candidate. When the **Simulation Tool** or the **Remote Operation Tool** is clicked, a simulator or remote operation tool with the selected and displayed version will launch. The setting is saved and will be default for the next startup.

Language Setting Window

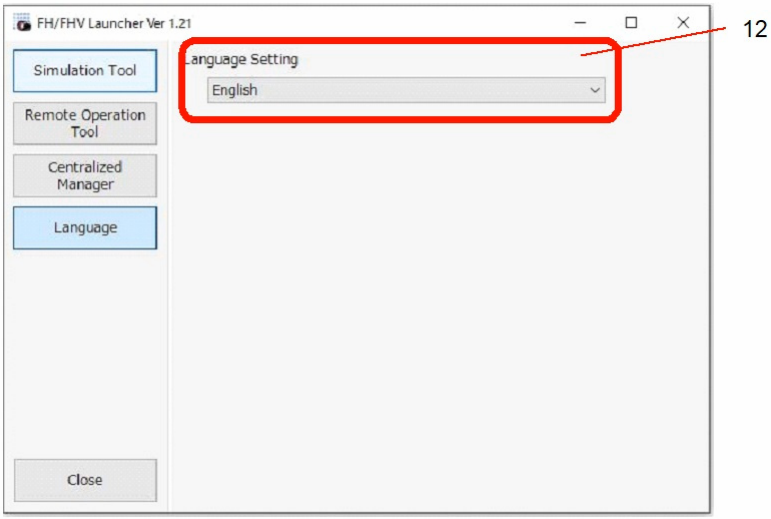

No.	Name	Description
12	Language selection box	Displays the current language setting. When changing the display language, the change is reflected immediately. The setting is saved and will be default for the next startup.

7-1-4 Use Procedures

Here describes how to launch the FH/FHV Launcher and the simulation software, and how to change the language settings.

Launching the FH/FHV Launcher

The following describes the launching procedure for the FH/FHV Launcher.

1 From the **Start** menu on your PC, select **All Programs** - **OMRON** - **FH_FHV Series** - **FH_FHV Launcher**.
The FH/FHV Launcher window appears.

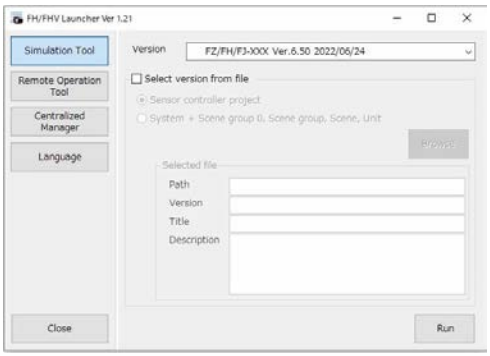

Launching the Simulation Software

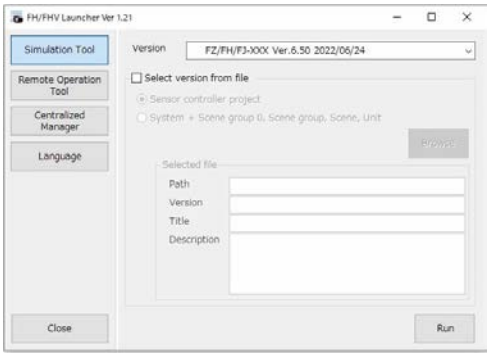

1 Click **Simulation Tool** .

2 Specify the version if it has already been known.
All software versions installed in the PC will be displayed.

3 When data for Sensor controller project, System + Scene group 0, Scene group, Scene, and Unit exist, the version of the software to launch can be checked by specifying data.

- Check the check box of *Select version from file*.
- Specify a file.

Item	Setting value Factory default	Description
Select version from file	• [Unchecked] • Checked	Checks this when checking the version from file.
Configuration file	• [Sensor controller project] • System +Scene group 0, Scene group, Scene, Unit	Sensor controller project: Selects this when checking the version of simulation software with data generated by the environment copy function. System +Scene group 0, Scene group, Scene, Unit: Selects this when checking the version of simulation software by using data like System +Scene group 0, Scene group, Scene, and Unit.

Precautions for Correct Use

If no version of a simulator to match the configuration file exists, a message of *No version of a simulator to match the configuration file is installed.* will appear.

4 The matched version of a simulator with the configuration file will appear.

5 Click **Run**.

Launching the Remote Operation Tool

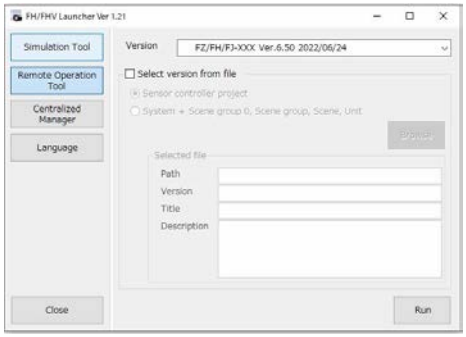

1 Click **Remote Operation Tool**.

2 Specify the version if it has already been known.
All software versions installed in the PC will be displayed.

3 When data for Sensor controller project, System + Scene group 0, Scene group, Scene, and Unit exist, the version of software to launch can be checked by specifying data.

- Check the check box of *Select version from file*.
- Specify a file.

Item	Setting value Factory default	Description
Select version from file	• [Unchecked] • Checked	Checks this when checking the version from file.
Configuration file	• [Sensor controller project] • System +Scene group 0, Scene group, Scene, Unit	Sensor controller project: Selects this when checking the version of simulation software with data generated by the environment copy function. System +Scene group 0, Scene group, Scene, Unit: Selects this when checking the version of simulation software by using data like System +Scene group 0, Scene group, Scene, and Unit.

Precautions for Correct Use

If no version of a simulator to match the configuration file exists, a message of *No version of a simulator to match the configuration file is installed.* will appear.

4 The matched version of a simulator with the configuration file will appear.

5 Click **Run**.

Changing Display Language

Change the current language setting of the tool.

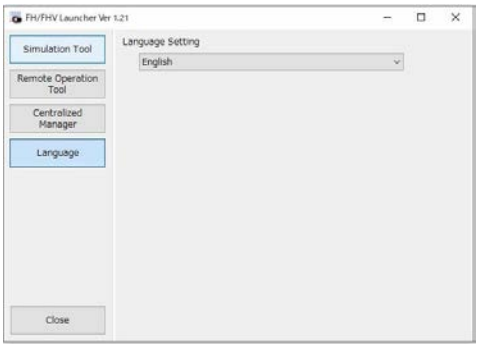

1 Click **Settings**.

2 Select language to display in the language setting dialog box.

Name	Description
Language setting	Displays the current language setting. When changing the display language, the change is reflected immediately. The setting is saved and will be default for the next startup.

Registering the License

This software displays a *License error!* message at startup when it passes 30 days after the installation and does not launch. To use this continuously, register the license.
Input the license number using the **FH/FHV License Tool**. The FH_FHV License Tool should be executed with administrative rights.

1 Click **Start** on the task bar of Windows and click **All programs**.

2 Click **FH_FHV License Tool** on **FH_FHV Series** of **OMRON**.
FH/FHV License Tool dialog appears.

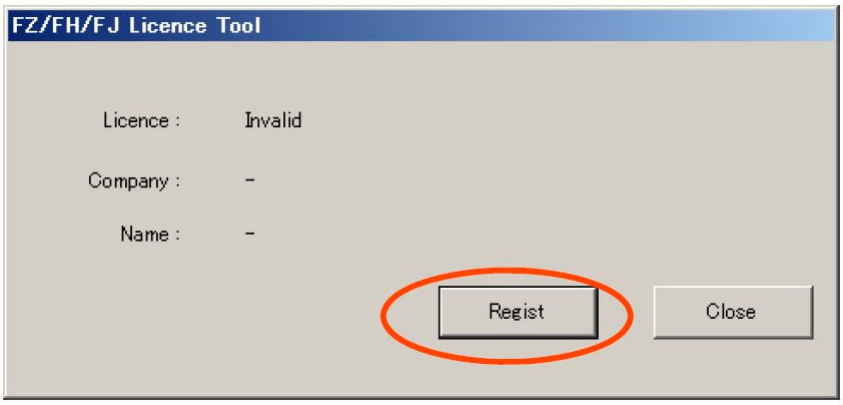

3 Click **Regist**.
The Setup window appears.

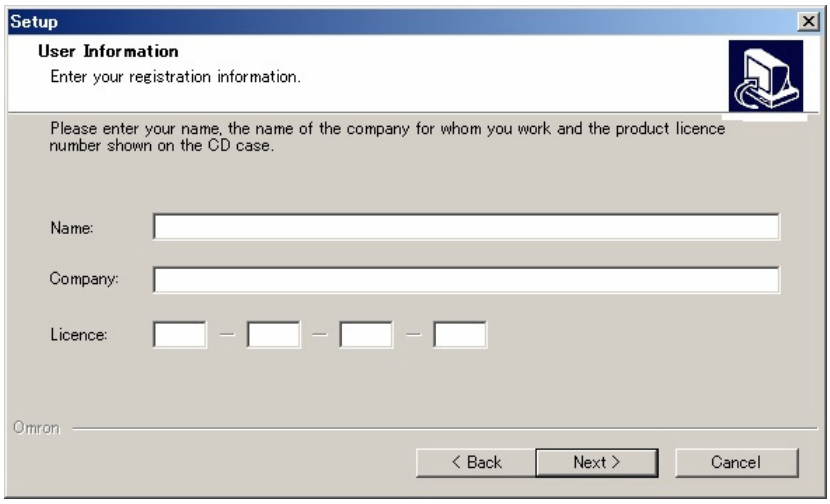

4 In the Setup window, input the Name, Company, and Serial Number) (License number) and click **Next**.
The Registration Confirmation window appears.

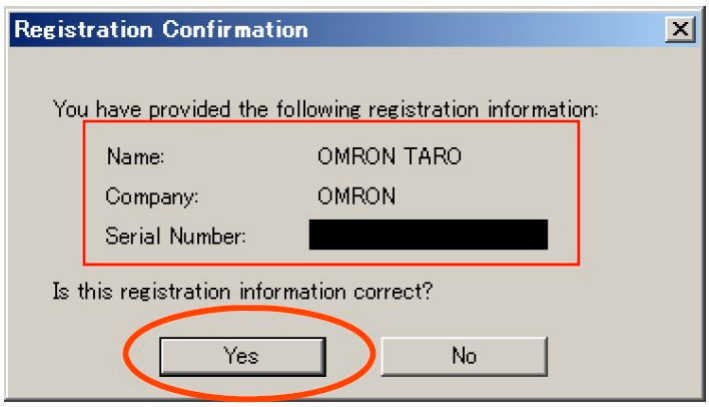

5 Click **Yes**.
When *License: valid* is displayed, the input is completed.

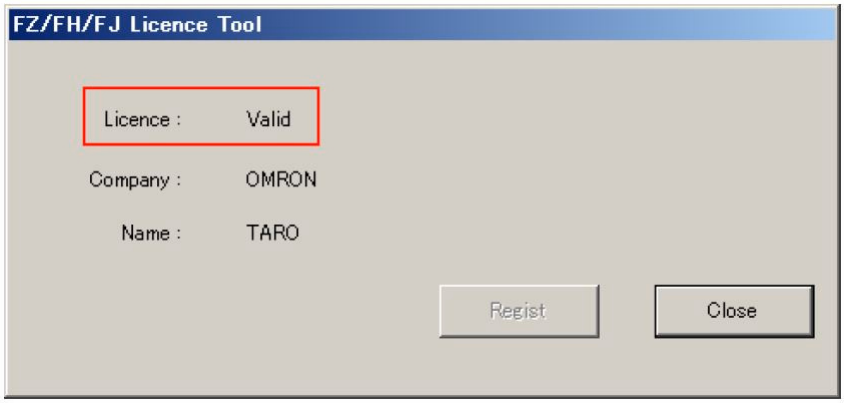

6 Click **Close** to close the window.

Troubleshooting

Trouble	Actions
A message of *The corresponding version of the simulator software is not installed.* appears.	• The message appears when no corresponding version of the simulator matching the configuration file is not installed. Get the simulation software with the version matching the configuration file. • The configuration file may be 5.70 or earlier. This software does not support those versions.
License error! appears at startup.	• 30 days and more have passed from the installation. Register the license number again when you continue using this software.
Buttons such as **File selection** are not displayed in the simulation software window.	• The DPI setting of the PC may be set to *Expansion*. Set it to *100% (96DPI)* or *Standard*.

7-2 Operating the Smart Camera Remotely [Remote Operation Tool]

7-2-1 Summary

With a PC on your network, you can remotely operate processing items editing or actual measurements to be performed on the smart camera. This feature is only available with an Ethernet connection.

Precautions for Correct Use

- The physical storage location of the setting data and data saving destination is on the smart camera.
- Smart camera windows cannot be operated or displayed simultaneously on multiple PCs on your network.
- Up to one sensor controller can be connected simultaneously with one remote operation tool. It is possible to connect to multiple sensor controllers by launching multiple remote operation tools.

For instance, the following usage is possible.

1. Using one specific PC handles GUI operations such as editing processing items and changing settings for inspection and measurement on multiple lines.

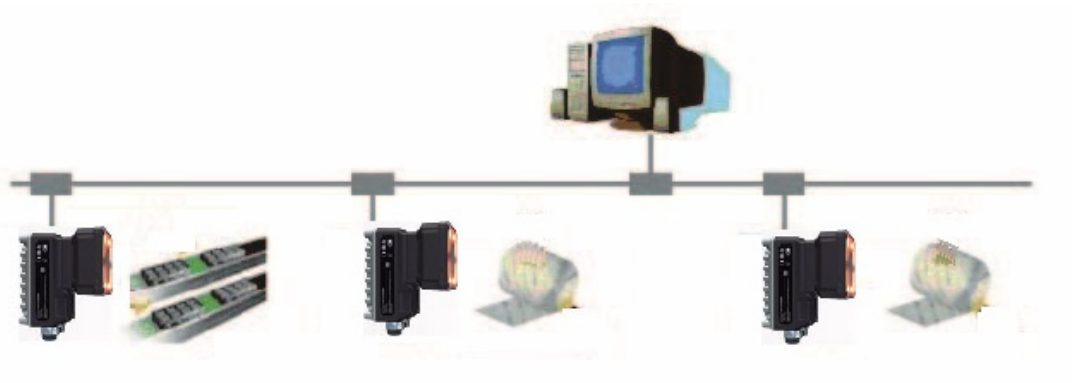

2. By changing a mode to the non-stop adjustment mode, adjustments are remotely available without stopping the line measurement.

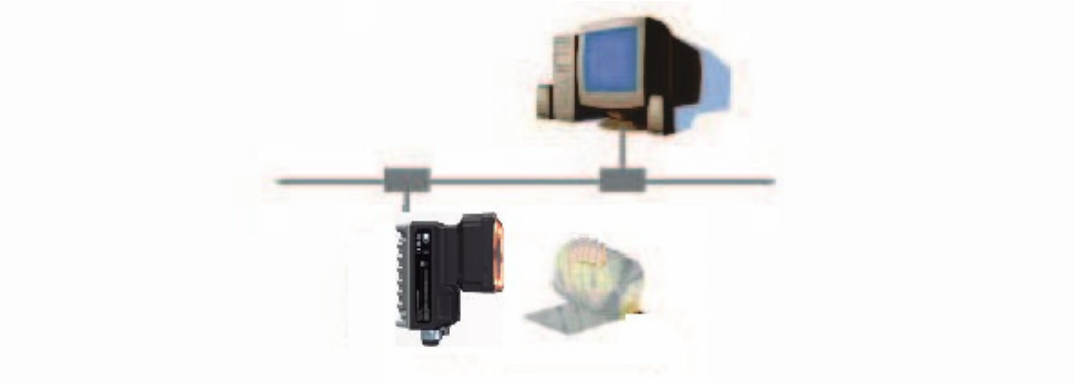

7-2-2 Environment Settings

The following preparations are required on the Smart Camera and a remote operation PC respectively to launch the remote operation.

- Remote operation PC: Arrange communications and GUI environments for the remote operation.
- Smart Camera: Set up a server for the remote operation.

Install a PC software to the remote operation PC.

Precautions for Correct Use

Make sure that the software version installed on the remote operation PC should be the same as that on the Smart Camera.

Precautions for Correct Use

In the remote operation, the following port numbers are used to communication with the Smart Camera.

- 9900 + Line number (e.g. port 9900 for line 0)
- 9910 + Line number (e.g. port 9910 for line 0)
- 9920 + Line number (e.g. port 9920 for line 0)

If these ports are disabled due to security settings of your PC or the domain security policy, the remote operation is not available.
Reconsider the security settings of your PC or the domain security policy or ask your domain security administrator.

7-2-3 Network Settings for the Remote Operation PC

Set the IP address for the remote operation PC.

1 Open the Local Area Connection Properties on the remote operation PC.

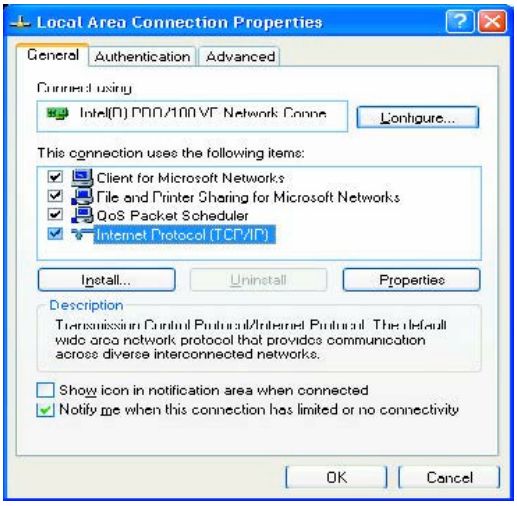

2 Input the IP address.

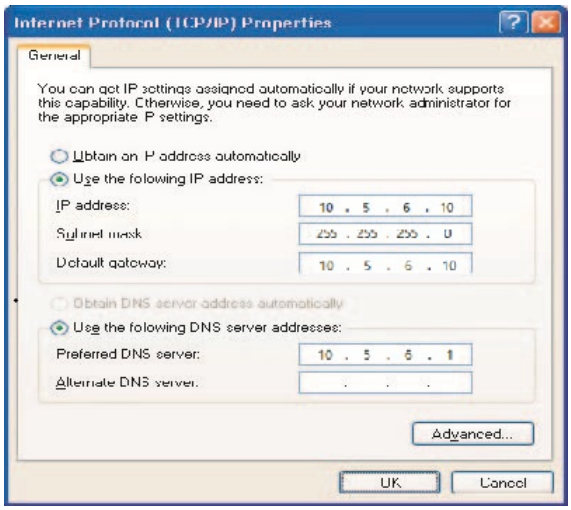

7-2-4 Network Settings for the Smart Camera

Precautions for Correct Use

The network settings for the smart camera set with this procedure is temporary. Since the settings are discarded with restarting the Sensor Controller or power off, perform the procedures of *7-2-5 Network Settings for the Smart Camera with Remote Operation Tool* on page 7-14 after the remote operation connected.

1 From **Start** menu on your PC, select **All Programs** - **OMRON** - **FH_FHV Series** - **FH_FHV Launcher**.
The FH/FHV Launcher window appears.

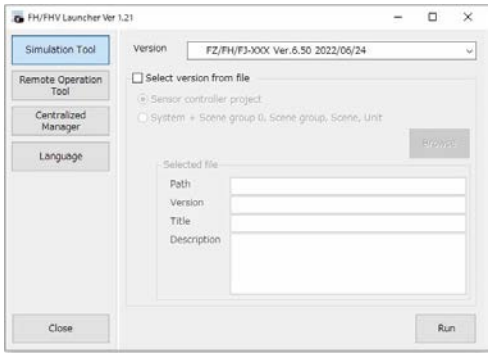

2 Click **Remote Operation Tool**.

3 Specify the version if it has already been known.
All software versions installed in the PC will be displayed.

Additional Information

When data for Sensor controller project, System +Scene group 0, Scene group, Scene, and Unit exist, the version of software to be run can be checked by specifying data. For details, refer to *Launching the Remote Operation Tool* on page 7-6.

4 Click **Run**.

Precautions for Correct Use

Do not connect or disconnect the Remote Operation tool during a measurement or the system running.

5 Click **Browse**.

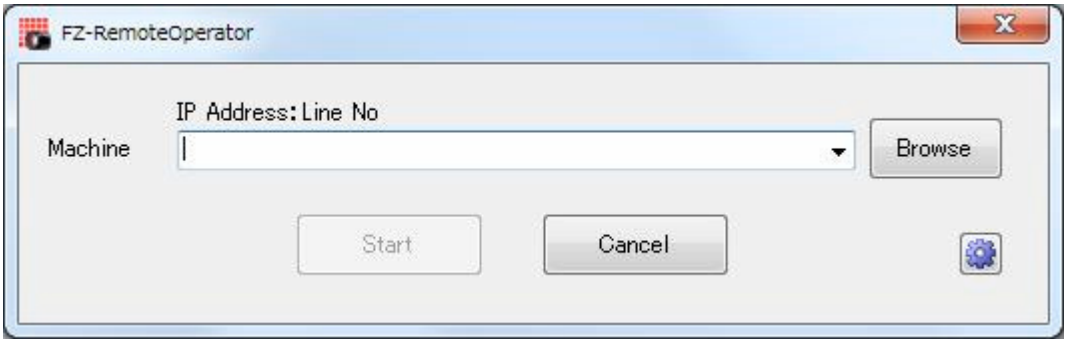

A Network reference list will be displayed.

6 Select your target Smart Camera in the list and click **Set Network...**.

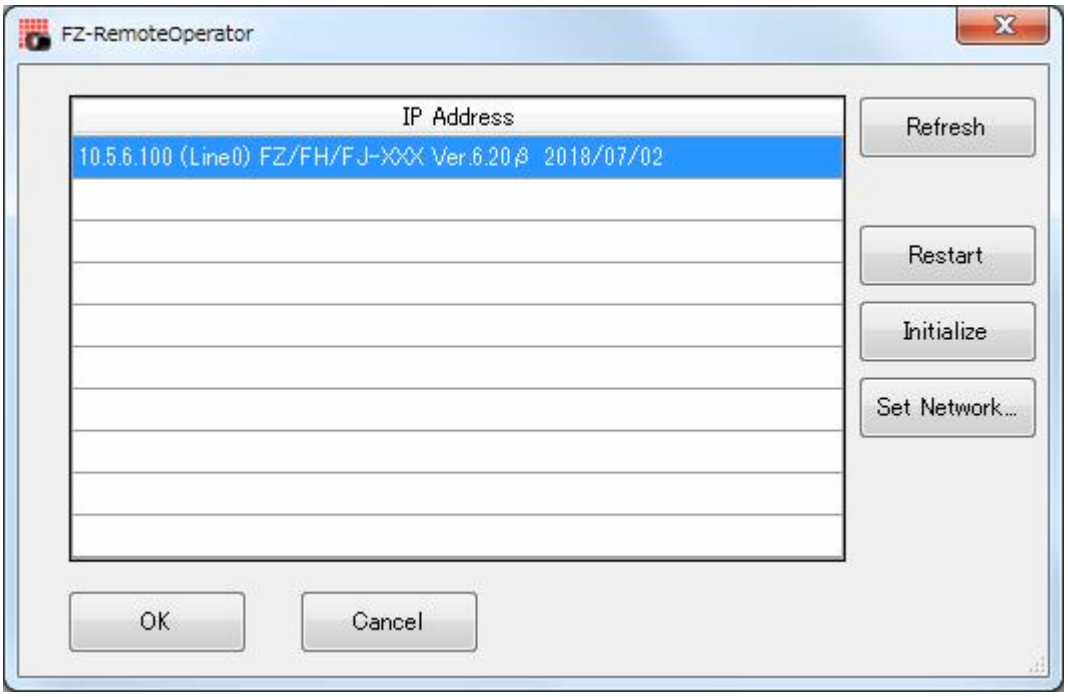

7 Set the IP address for the Smart Camera on the Network setting.

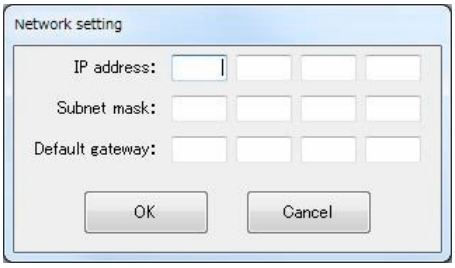

8 Click **OK**.

The IP address is set to the Smart Camera.

9 On the network reference list, click **Refresh** to check the IP address setting is reflected.

Precautions for Correct Use

The reflection of IP address settings may take time. If it were not reflected, click **Refresh** again.

Precautions for Correct Use

If a bad IP address or an IP address overlapped with a device on the same network are set, an IP address different from your Setting will be displayed on the list like (169.254. xx. xx). Perform this procedure to set a valid IP address.

7-2-5 Network Settings for the Smart Camera with Remote Operation Tool

1 In the Main window, select **Tool** → **System settings** → **Communications** → **Ethernet (*****)**.
Set the IP address 2.
The *(*****)* area indicates the *Serial (Ethernet)* contents set in the *Communication module*.

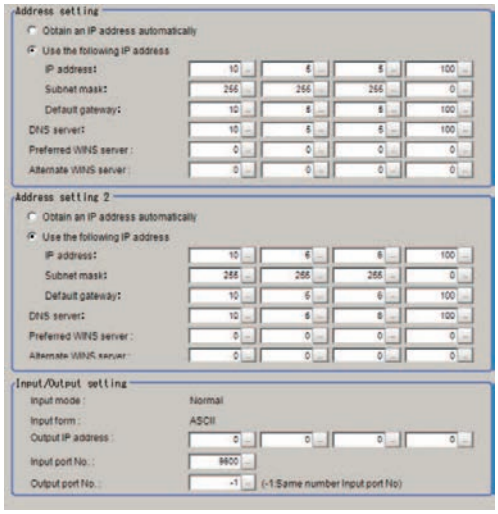

7-2-6 Launching the Remote Operation

Precautions for Correct Use

If the connection is disconnected during the remote operation, the Remote Operation tool and the Smart Camera may not operate properly. After terminating the Remote Operation tool, return the Smart Camera to normal state with clicking **Restart** or **Initialize** on the Remote Operation tool. If the Remote Operation tool could not be terminated with **Close**, then terminate the process of *FZ-PanDA.exe* with the task manager.

1 In order to launch the Launcher, from **Start** at the lower left area of the window for the remote operation PC, select **All programs** - **OMRON** - **FH_FHV series** - **FH_FHV Launcher**.
Note that the Smart Camera must be placed in a measurement capable state.

Precautions for Correct Use

Do not connect or disconnect the Remote Operation Tool during a measurement or the system running.

2 The FH/FHV Launcher window appears.

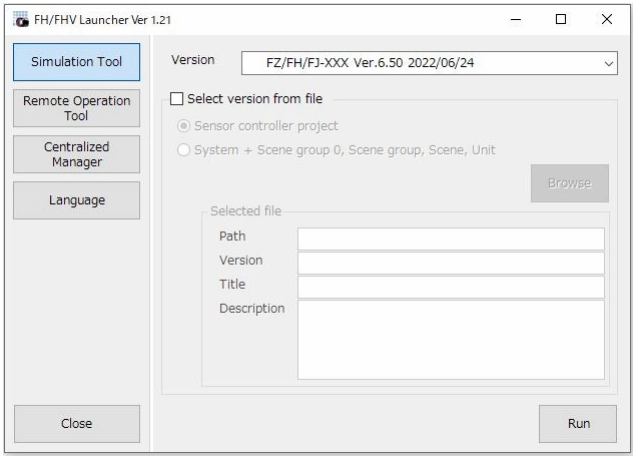

3 Click **Remote Operation Tool**.

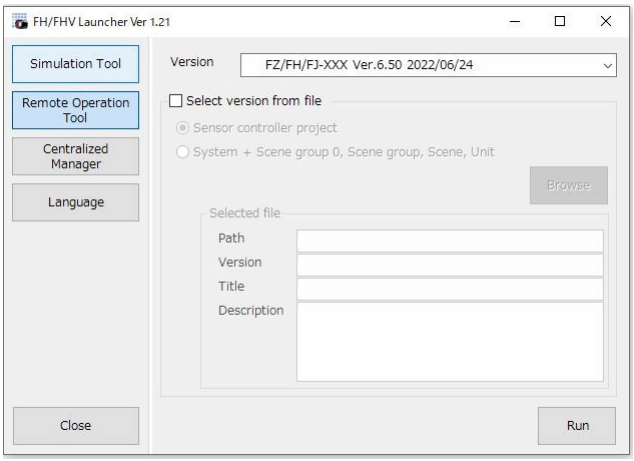

4 Specify the version if it has already been known.
All software versions installed in the PC will be displayed.

Additional Information

When data for Sensor controller project, System +Scene group 0, Scene group, Scene, and Unit exist, the version of software to be run can be checked by specifying data. For details, refer to *Launching the Remote Operation Tool* on page 7-6.

5 Click **Run**.

6 Select or directly input the IP address and *Line No.* for the Sensor Controller to be connected.

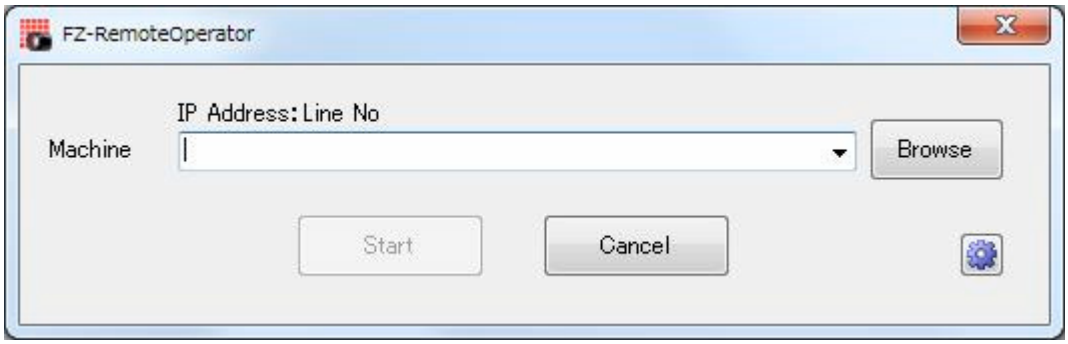

Click **Browse** to check the IP addresses and Line No. for connectable Smart Camera.

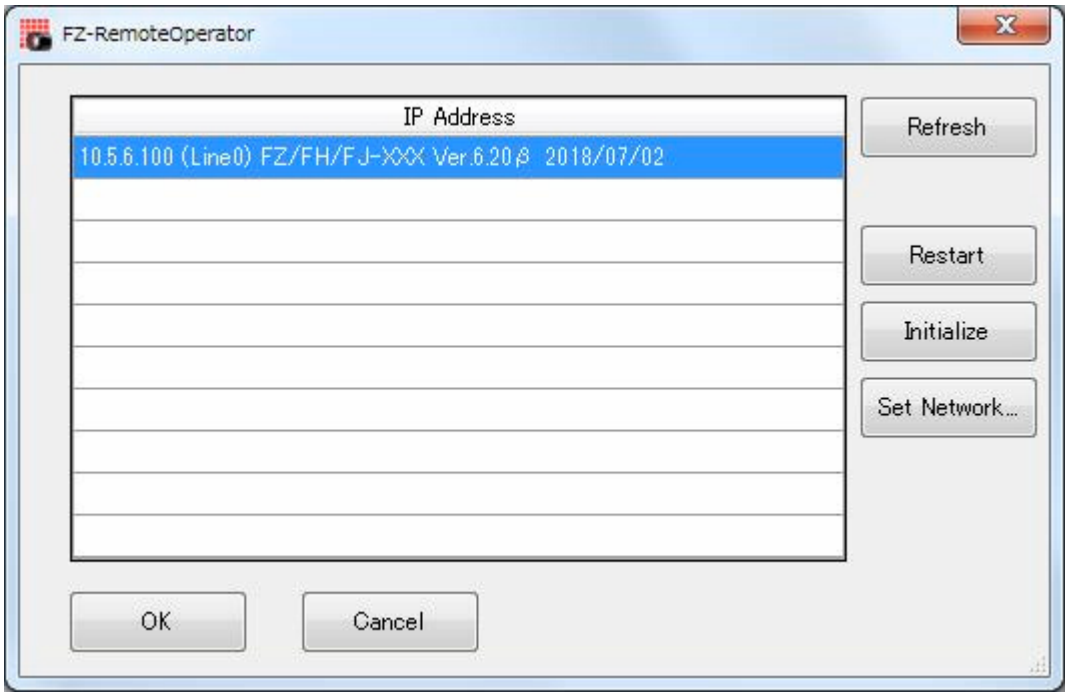

* The *Line No.* selected here is one of the following based on the system's operation mode.

Operation mode		Setting
Standard		Line No. = 0
Double Speed Multi-input		Line No. = 0
Non-stop adjustment	Measurement window	Line No. = 0
	Non-stop adjustment window	Line No. = 1

If a Line No. other than the above was selected, the remote operation cannot be connected to Sensor Controllers.

7 Change the size of an image to transfer with the remote operation as necessary. Select ( ) to set.

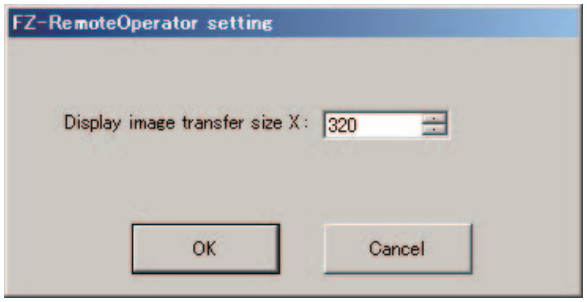

Setting item	Description
Display image transfer size (Size of an image to transfer)	Sets the size of the image displayed in the remote operation window. Depending on the "Display image transfer size (Size of the image to transfer)" setting, the roughness of the display image or figure display changes.

8 Click **Start**.

Additional Information

When the security setting has been set on a Sensor Controller to connect, inputting the password for a security setting item is requested on the Remote operation window.

- In Layout 8, an error dialog will not be displayed even if an error occurred. Instead, an error string is displayed on the Error Pane. When an error occurred, check it on the Error Pane.
- In Layout 8, the Layout Modification Mode can handle the following panes only. When using panes other than them, use a layout other than Layout 8 for the normal remote operation.
  - Flow Display Pane
  - Image Pane
  - Judgement Pane
  - Error Pane

7-2-7 Terminating the Remote Operation

1 To terminate the remote operation with the remote operation PC, click **End** in the **File** menu on the Remote Operation tool.

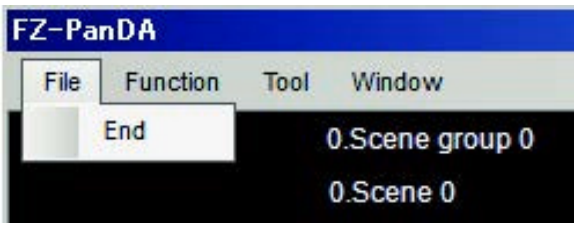

Precautions for Correct Use

Follow the procedures above to terminate the *Remote Operation Tool*. If you do not follow the procedures above, such as shutting down the remote operation PC or using the task manager to terminate, the Smart Camera may not operate properly.

7-3 Using the Simulation Software [Simulation Software]

7-3-1 Introduction

With the simulation software, you experience the operability of the Smart Camera FHV series on a PC. Other than sample images saved in the Smart Camera, the simulation software allows you to use images saved in FH/FHV series and ones shot by a digital camera.

7-3-2 Available Image Formats

Image formats that are available in this simulation software are below. Before use, store them to an external storage beforehand and copy them to a folder generated in a specified location. (For creating a folder, refer below.)

- File type: bmp, jpg, ifz (OMRON image logging file format for FH/FHV), bfz (This format was added to the software version 5.50 and later for FH. A container format image logging file including bmp type image files.), jfz (This image file type was added to the software version 5.60 and later for FH. Jpeg format image files are organized in folders when saved as a logging image file format.)
- Color: 256 (monochrome) or 24-bit (color)
- File name: Half-width alphanumeric only

7-3-3 Operational Precautions

The simulation software allows you to experience functions of the smart camera FHV series on a PC. Please note that operations on the simulation software may be different from those on the actual FHV series.

■ Unavailable operations with the simulation software

- Image input and measurement with a camera connected.
- Use and check of the I/O monitor
- Data output in the result output processing item
- Conditional branch corresponding to DI in the input conditional branch processing item.
- Saving each data to the smart camera

■ Different Operations from the smart camera.

- Performing measurements
  Since a measurement with a connected camera is unavailable, the measurement is always performed on file images.
- Settings for camera image input
  Changing values are only available.
- Saving data to the smart camera memory.
  Scene data, scene group data, when selecting **Main memory** at saving **System** setting data, the data is saved in the following folder.
  C:\Documents and Settings\Computer name\My Documents\OMRON FZ\SettingData

■ Other precautions

- This simulation software can load scene data and system data generated with FHV series. Likewise, scene data and system data generated with the simulation software can be used with FHV series. However, regarding a setting including "path" (logging setting or capture setting case), the path name may differ on the FHV series, it may require re-set.
- Different memory capacity does not allow FHV series to load data generated by the simulation software.
  Reconsider the settings and scenes and reduce the necessary memory amount, then load them again.
- As same as the above issue, FHV series can load scene data with many processing units related to image input and image conversion due to the memory amount difference, but the simulation software may not load and measure the data because of *NG (insufficient memory)*. Reconsider the scene contents and reduce the necessary memory amount, then load them again.

I

Index

I

Index

A

Accessories..... 1-10
Anti-reflection Sheets..... 1-13
Assembling Equipment.....5-2
Attaching the Lens Module.....5-10
Available List of Smart Camera and Software Versions.... 3-6

B

Basic System of Measurement.....2-2

C

Cables..... 1-5
I/O Cable Interface (Power Supply, I/O, RS-232C).....6-7
C Mount Lens..... 3-51
How to View the Optical Chart..... 3-61
Meaning of Optical Chart..... 3-61
Optical Chart.....3-62
High-resolution Telecentric Lens VS-TCH Series for C Mount Lens for 2/3-inch Image Sensor..... 3-58
Non-telecentric Macro Lens VS-MC Series for C Mount Camera.....3-60
SV-H Series..... 3-52
SV-V Series.....3-51
Vibration/Shock Resistance Lens VS-MCA Series for C Mount Camera.....3-53
C Mount Lens/IP40 Configuration..... 5-2
C Mount Lens/IP67 Configuration..... 5-3
C Mount Lenses..... 3-51
Component Names and Functions.....3-7
Concept of Measurement Processing..... 2-3
Configuration.....3-1
Confirm the Package.....1-1
Smart Camera.....1-2
Connection
How to connect..... 5-20
Controller specifications..... 2-7
Cover for C mount.....1-11
Cover for High-speed lens modules..... 1-12
Cover for lens modules.....1-11

D

Dimensions
Ethernet Cables..... 3-30
FHV Series.....3-8
I/O Cables.....3-22
Lens Modules.....3-44
Lighting Modules.....3-69
Mounting Fixtures..... 3-78
Opetical Filters.....3-71
Waterproof Hood.....3-73

E

EtherCAT Interface Specifications (FHV-SDU30).....6-36
Pin Layout.....6-37
Wiring.....6-37
I/O Connector.....6-37
Ethernet cable bending resistance right-angle..... 1-6, 1-7
Ethernet cable bending resistance straight..... 1-6, 1-7
Ethernet Cables.....1-6, 3-26
Dimensions..... 3-30
Specifications.....3-26
Ethernet interface..... 6-19
Cables.....6-20
Pin Layout.....6-24

F

Fail-safe Measures.....6-4
FHV7□-□□□□□-C Series.....1-2
FHV7□-□□□□□-S□□ Series.....1-2
FHV7□-□□□□□-S□□-□□ Series..... 1-3
FHV7□..... 3-3
FHV7□-□□□□□-H□□-□□ Series.....1-4
FHV7□-□□□□□-H□□ Series.....1-3
FHV7H.....3-3
FHV7X.....3-3
FHV-LEM-H..... 1-12
FHV-LEM-H06..... 1-9
FHV-LEM-H19..... 1-9
FHV-LEM-H special cover..... 5-12
FHV-LEM-S.....1-11
FHV-LEM-S06..... 1-9
FHV-LEM-S09..... 1-9
FHV-LEM-S12..... 1-9
FHV-LEM-S25..... 1-9
FHV-SDU10.....1-5, 3-13
FHV-SDU30.....1-5, 3-13
FHV Series.....2-4, 3-3
Dimensions..... 3-8
Component Names and Functions..... 3-7
Specifications.....3-3
FHV-VDB.....1-6, 3-17, 3-18
FHV-VDB2.....1-5, 3-17
FHV-VDBX.....1-6
FHV-VDBX2..... 1-5, 3-18, 3-19
FHV-VDLB.....1-6, 3-20
FHV-VDLB2.....1-5, 3-19
FHV-VDLBX..... 1-6, 3-21
FHV-VDLBX2..... 1-5, 3-20
FHV-VFLX-GD.....1-8, 3-42
FHV-VNB.....1-7, 3-26, 3-27
FHV-VNB2.....1-6, 3-26
FHV-VNBX..... 1-7, 3-27
FHV-VNBX2..... 1-6, 3-27
FHV-VNLB.....1-7, 3-28

FHV-VNLB2.....1-6, 3-28
FHV-VNLBX..... 1-7, 3-29
FHV-VNLBX2..... 1-6, 3-29
FHV-VUB.....1-8, 3-34, 3-35
FHV-VUB2.....1-7, 3-34
FHV-VUBX..... 1-8, 3-35
FHV-VUBX2..... 1-7, 3-35
FHV-VULB.....1-8, 3-36
FHV-VULB2.....1-7, 3-36
FHV-VULBX..... 1-8, 3-37
FHV-VULBX2..... 1-8, 3-37
FHV-XFC-C.....1-11, 3-84
FHV-XFC-LEM-H.....3-84
FHV-XFC-LEM-S.....3-84
FHV-XLS-LTM.....3-83
FHV-XSCR-MSD.....1-12, 3-86
FHV-XWC-ECN..... 1-11, 3-81
FHV-XWC-ICN.....3-81
FHV-XWC-LCN.....1-11
FHV-XWP-CAM.....3-79
FHV-XWP-CHD-SL.....3-79
FHV-XWP-LTM.....3-79
Flow of Use Procedure.....2-9
focal length.....2-7
For Ethernet connector..... 1-11
For lighting connector..... 1-11

H

Handling and Installation Environment.....4-1
High-Pressure Waterproof Attachment (PWA)..... 1-13
High-resolution Telecentric Lens VS-TCH Series for C Mount Lens for 2/3-inch Image Sensor.....3-58

I

I/O cable bending resistance right-angle.....1-5, 1-6
I/O cable bending resistance straight..... 1-5, 1-6
I/O Cable Interface (Power Supply, I/O, RS-232C).....
.....6-6, 6-14, 6-16
RS-232C Interface..... 6-18
I/O Cables..... 1-5, 3-17
Dimensions..... 3-22
Specifications.....3-17
I/O cable super bending resistance right-angle.....1-5, 1-6
I/O cable super bending resistance straight..... 1-5, 1-6
I/O Interface Input/Output Circuit Diagram..... 6-16
Imaging element.....2-7
Installation.....5-1 – 5-3, 5-5
High-speed Lens Module / IP40 Configuration..... 5-10
High-speed Lens Module / IP67 Configuration..... 5-13
Setting up the Software.....7-3
Standard Lens Module/IP67 Configuration..... 5-8
Installing the Smart Camera.....5-20
When Connecting the Smart Camera to a Lighting Controller..... 5-25
When Mounting the Smart Camera Directly (without Mounting Fixture)..... 5-21
When Mounting the Smart Camera Directly Using the Mounting Fixture.....5-22
Interface for the Data Unit for Smart Camera.....6-25
Cables / I/O Connectors, and Terminals..... 6-26
I/O Interface Input/Output Circuit Diagrams.....6-34
Parallel Interface Specifications.....6-32
Pin Layout..... 6-28
Interface Specification..... 6-14
EtherCAT Interface Specifications (FHV-SDU30)
Cables.....6-36

J

Junction cable for external lighting..... 1-8, 3-42

L

Launching the Remote Operation.....7-14
Lens module
Attaching the Lens Module..... 5-5
Lens Modules..... 1-9, 3-43
Dimensions..... 3-44
How to View the Optical Chart..... 3-46
Optical Chart.....3-46, 3-47
Specifications.....3-43
Lens type.....2-7
Lighting
Lighting Controller.....1-12
Lighting color..... 2-7
Lighting Controller
Mounting and Attaching..... 5-25
Lighting Module
Attaching the Lighting Module.....5-15
Lighting Modules..... 1-9, 3-68
Dimensions..... 3-69
Specifications.....3-68
Lightproof Sheet..... 3-83
Dimensions..... 3-83
Specifications.....3-83
Light-shielding Sheet..... 1-11

M

MicroSD Card
Inserting and Removing the MicroSD Card..... 6-38
How to Insert/Remove the MicroSD Card.....6-38
Model Reference..... 2-7
Modules.....1-9
Mounting Fixture
When Installing Using the Mounting Fixture..... 5-22
When Installing Using the Mounting Fixture on the Front...
..... 5-23
Mounting Fixtures.....1-10, 3-77
Specifications.....3-77
Dimensions..... 3-78
Mounitng the Data Unit for the Smart Camera..... 5-19
Mounting the Data Unit for the Smart Camera
Mounting to DIN Rail.....5-19

N

NA-12WATW01..... 1-13

NA-12WKBA04 1-13
NA-15WATW01 1-13
NA-15WKBA04 1-13
Network Settings for the Remote Operation PC 7-11
Network Settings for the Smart Camera 7-12
Non-telecentric Macro Lens VS-MC Series for C Mount Camera 3-60
NYE2A-20F11-12WR1200 1-13
NYE2A-20F11-15WR1200 1-13

O

Optical Chart
Normal Lenses 3-62
Vibration/Shock-resistance Lens 3-65
Optical Filters
Specifications 3-70
Dimensions 3-71
Overview of FHV Series 2-1
Overview of System 2-2

P

Pin Layout
1000BASE-T 6-24
10BASE-T / 100BSE-T 6-24
I/O Cable Interface (Power Supply, I/O, RS-232C) 6-12
Power Supply and I/O Interface 6-1
PPC-310-OMR 1-13
Precautions for I/O Interface 6-5

R

Recommended Operational Environment
Software Setup 7-2
Recommended Power Supply for FHV Series) 6-6
Remote Operational Tool
Launching the Remote Operation 7-14
Terminating the Remote Operation 7-17
Remote Operation Tool 3-87, 7-10
Environment Settings 7-11
Network Settings for the Smart Camera 7-12
Network Settings for the Remote Operation PC 7-11
Network Settings for the Smart Camera with Remote Operation Tool 7-14
Summary 7-10
Remote operation tool 1-14
Replacement Screws for MicroSD Card Cover 3-86
Specifications 3-86
Replacement Screws for Micro SD Card Cover 1-12
Dimensions 3-86
Resolution 2-7

S

Setting up the Software 7-2
Shutter system 2-7
Simulation Software 3-87, 7-18
Smart Camera 3-3
smart camera data unit 1-5
Smart Camera Data Unit 3-13
Component Names and Functions 3-14
Dimensions 3-15
Specifications 3-13
smart camera data unit cable 1-7
Smart Camera Data Unit Cable 3-34
Smart Camera data unit cable bending resistance right-angle 1-7, 1-8
Smart Camera data unit cable bending resistance straight 1-7, 1-8
Smart Camera Data Unit Cables
Dimensions 3-38
specifications 3-34
Smart Camera Data Unit Cables (Right-angle, bending resistance) 3-36
Smart Camera Data Unit Cables (Right-angle, super bending resistance) 3-36
Smart Camera Data Unit Cables (Straight, bending resistance) 3-34
Smart Camera Data Unit Cables (Straight, super bending resistance) 3-35
Smart Camera data unit cable super bending resistance right-angle 1-8
Smart Camera data unit cable super bending resistance straigh 1-7, 1-8
Smart Camera Models and System Configuration 2-7
Software 1-14, 3-87
Software Setup 7-1
Sold Separately 1-5
special cover 1-11
Special cover for FHV-LEM-H 1-9
Special Covers 3-84
Dimensions 3-84
Specifications 3-84
Specifications 3-51
FHV Series 3-3
I/O Cables 3-17
Lighting Modules 3-68
Optical Filters 3-70
Waterproof Hood 3-72
Ethernet Cables 3-26
High-resolution Telecentric Lens VS-TCH Series for C Mount Lens for 2/3-inch Image Sensor 3-58
Lens Modules 3-43
Non-telecentric Macro Lens VS-MC Series for C Mount Camera 3-60
SV-H Series 3-52
SV-V Series 3-51
Vibration/Shock Resistance Lens VS-MCA Series for C Mount Camera 3-53
Standard Lens Module/IP40 Configuration 5-5
SV-H Series 3-52
SV-V Series 3-51
Sysmac Studio 1-14
System Configurations 2-8

T

Terminating the Remote Operation 7-17

Touch Panel Monitor.....1-13
Touch Panel Monitor for FHV7 Smart Camera series..... 1-13

U

Use Procedures.....7-5
Changing Display Language.....7-7
Launching the FH/FHV Launcher..... 7-5
Launching the Remote Operation Tool..... 7-6
Launching the Simulation Software..... 7-5
Registering the License..... 7-8
Troubleshooting..... 7-9
Using the Simulation Software..... 7-18
Available Image Formats..... 7-18
Introduction..... 7-18
Operational Precautions..... 7-18

V

Vibration/Shock Resistance Lens VS-MCA Series for C Mount Camera..... 3-53

W

Warning..... 4-2
Waterproof Caps.....1-11, 3-81
Dimensions..... 3-81
Specifications.....3-81
Waterproof Hood..... 3-72
Specifications.....3-72
Dimensions..... 3-73
Waterproof Hoods.....1-10
Waterproof Packings..... 1-10, 3-79
Waterproof packings
Specifications.....3-79
Waterproof Packings..... 1-10, 3-79
Dimensions..... 3-79
When Turning Power ON and OFF..... 6-2
Windows.....7-3
Language Setting Window.....7-4
Simulation Software Window and Remote Operation Tool Window.....7-3

OMRON Corporation **Industrial Automation Company**

Kyoto, JAPAN **Contact : www.ia.omron.com**

Regional Headquarters

OMRON EUROPE B.V.
Wegalaan 67-69, 2132 JD Hoofddorp
The Netherlands
Tel: (31) 2356-81-300 Fax: (31) 2356-81-388

OMRON ELECTRONICS LLC
2895 Greenspoint Parkway, Suite 200
Hoffman Estates, IL 60169 U.S.A.
Tel: (1) 847-843-7900 Fax: (1) 847-843-7787

OMRON ASIA PACIFIC PTE. LTD.
438B Alexandra Road, #08-01/02 Alexandra
Technopark, Singapore 119968
Tel: (65) 6835-3011 Fax: (65) 6835-3011

OMRON (CHINA) CO., LTD.
Room 2211, Bank of China Tower,
200 Yin Cheng Zhong Road,
PuDong New Area, Shanghai, 200120, China
Tel: (86) 21-6023-0333 Fax: (86) 21-5037-2388

Authorized Distributor:

©OMRON Corporation 2018-2026 All Rights Reserved.
In the interest of product improvement,
specifications are subject to change without notice.

Cat. No. Z408-E1-12 0926