Cat. No. W454-E1-04

生産終了
DISCONTINUED

SmartSlice GRT1-DRT

DeviceNet™ Communications Unit

OPERATION MANUAL

OMRON

NOTE

All rights reserved. No part of this publication may be reproduced, stored in a retrieval system, or transmitted, in any form, or by any means, mechanical, electronic, photocopying, recording, or otherwise, without the prior written permission of OMRON.

No patent liability is assumed with respect to the use of the information contained herein. Moreover, because OMRON is constantly striving to improve its high-quality products, the information contained in this manual is subject to change without notice. Every precaution has been taken in the preparation of this manual. Nevertheless, OMRON assumes no responsibility for errors or omissions. Neither is any liability assumed for damages resulting from the use of the information contained in this publication.

Trademarks

• COMBICON is a registered trademark of the Phoenix Contact Company.
• ODVA, CIP, CompoNet, DeviceNet, and EtherNet/IP are trademarks of ODVA.

Other company names and product names in this document are the trademarks or registered trademarks of their respective companies.

Copyrights

Microsoft product screen shots reprinted with permission from Microsoft Corporation.

SmartSlice
GRT1-DRT
DeviceNet Communications Unit

Operation Manual

Revised December 2017

Notice:

OMRON products are manufactured for use according to proper procedures by a qualified operator and only for the purposes described in this manual.

The following conventions are used to indicate and classify precautions in this manual. Always heed the information provided with them. Failure to heed precautions can result in injury to people or damage to property.

⚠ DANGER Indicates an imminently hazardous situation which, if not avoided, will result in death or serious injury. Additionally, there may be severe property damage.

⚠ WARNING Indicates a potentially hazardous situation which, if not avoided, could result in death or serious injury. Additionally, there may be severe property damage.

⚠ Caution Indicates a potentially hazardous situation which, if not avoided, may result in minor or moderate injury, or property damage.

OMRON Product References

All OMRON products are capitalized in this manual. The word “Unit” is also capitalized when it refers to an OMRON product, regardless of whether or not it appears in the proper name of the product.

The abbreviation “Ch,” which appears in some displays and on some OMRON products, often means “word” and is abbreviated “Wd” in documentation in this sense.

The abbreviation “PLC” means Programmable Controller. “PC” is used, however, in some Programming Device displays to mean Programmable Controller.

Visual Aids

The following headings appear in the left column of the manual to help you locate different types of information.

Note Indicates information of particular interest for efficient and convenient operation of the product.

1,2,3... 1. Indicates lists of one sort or another, such as procedures, checklists, etc.

TABLE OF CONTENTS

PRECAUTIONS xv

1 Intended Audience xvi
2 General Precautions xvi
3 Safety Precautions xvi
4 Operating Environment Precautions xvii
5 Application Precautions xviii
6 EC Directives xix

SECTION 1
Overview 1

1-1 Overview of Slice I/O Terminals 2
1-2 Features and System Configuration 2
1-3 Specifications 4
1-4 List of Available Units 6
1-5 Basic Operating Procedure 7

SECTION 2
Component Names and Functions 9

2-1 Nomenclature and Dimensions 10
2-2 Node Address Settings and I/O Allocation 14
2-3 Unit Functions 23

SECTION 3
Installation and Wiring 39

3-1 Installation 40
3-2 Power Supply Wiring 44
3-3 Wiring DeviceNet Communications Cables 47
3-4 Connecting the Turnback Cable 50

SECTION 4
Setup and Operating Procedures 51

4-1 Basic Operating Procedure and Example Configuration 52
4-2 Preparation for Operation 53
4-3 Setting and Wiring Hardware 55
4-4 Starting Communications 57
4-5 Checking Operation 60

SECTION 5
Communications Characteristics 61

5-1 Remote I/O Communications Characteristics 62
5-2 Message Communications Characteristics 66

TABLE OF CONTENTS

SECTION 6
Troubleshooting 67

6-1 Troubleshooting Overview 68
6-2 LED Indicators and Error Processing 68
6-3 Reading the Error History with the DeviceNet Configurator 71
6-4 Other Errors 74

Appendices

A DeviceNet Explicit Messages 77
B Using Another Company's Master Unit 83
C Standard Models 91
D Power Consumption Tables 95
E I/O Current Consumption 97

Glossary 99

Index. 101

Revision History 103

About this Manual:

This manual describes the installation and operation of the DeviceNet Communications Unit for Slice I/O Terminals and includes the sections described below. The DeviceNet Communications Unit for Slice I/O Terminals is an interface Unit that connects Slice I/O Units with a DeviceNet Master.

Please read this manual carefully and be sure you understand the information provided before attempting to install or operate the DeviceNet Communications Units. **Be sure to read the precautions provided in the following section.**

The following manuals also cover information related to DeviceNet applications. Use the *DeviceNet Operation Manual* together with other required manuals.

Manual	Contents	Cat. No.
DeviceNet™ Communications Unit for Slice I/O Terminals Operation Manual (this manual)	Describes the specifications, functions, operating procedures, and applications of the DeviceNet Communications Unit, which allows Slice I/O Units to be set, controlled, and monitored through DeviceNet.	W454
GRT1 Series Slice I/O Units Operation Manual	Describes the models, specifications, functions, operating procedures, and applications of GRT1-series Slice I/O Units.	W455
DeviceNet™ Operation Manual	Describes the configuration and construction of a DeviceNet network, including installation procedures and specifications for cables, connectors, and other connection devices, as well as information on functions, operating procedures, and applications. Read this manual carefully and be sure you understand the information provided before attempting to use DeviceNet.	W267
CS/CJ Series DeviceNet™ Units Operation Manual	Describes the specifications, functions, operating procedures, and applications of CS-series and CJ-series DeviceNet Units. (A CS/CJ-series DeviceNet Unit can operate as both a DeviceNet master and DeviceNet slave at the same time.)	W380
DeviceNet™ Configurator Ver. 2.□ Operation Manual	Describes the operating procedures of the DeviceNet Configurator. The DeviceNet Configurator can be used to configure, set, and maintain a DeviceNet system through an easy-to-use graphical interface. Refer to this manual when necessary.	W382

Precautions provides general precautions for planning, installing, and operating the DeviceNet Communications Unit and related devices.

Section 1 provides an overview of the DeviceNet Communications Unit with information such as the features and system configuration.

Section 2 describes the DeviceNet Communications Unit's components, describes the Unit's functions in detail, and explains how to allocate I/O.

Section 3 explains how to install and wire the DeviceNet Communications Unit and Slice I/O Terminals.

Section 4 describes the procedures required to begin actual communications between the DeviceNet Communications Unit and Slice I/O Terminals.

Section 5 provides information on communications using the remote I/O communications function and message communications function, such as response times and transmission delays.

Section 6 explains how to monitor and correct errors that occur in a DeviceNet Communications Unit or Slice I/O Unit, interpret the Unit's LED indicators, and read the error history from the DeviceNet Configurator.

Appendix explains how to handle EDS setting files required for multivendor environments and how to list the device profile of the DeviceNet Communications Unit and information on related products.

⚠ WARNING Failure to read and understand the information provided in this manual may result in personal injury or death, damage to the product, or product failure. Please read each section in its entirety and be sure you understand the information provided in the section and related sections before attempting any of the procedures or operations given.

Terms and Conditions Agreement

Warranty, Limitations of Liability

Warranties

● **Exclusive Warranty**

Omron's exclusive warranty is that the Products will be free from defects in materials and workmanship for a period of twelve months from the date of sale by Omron (or such other period expressed in writing by Omron). Omron disclaims all other warranties, express or implied.

● **Limitations**

OMRON MAKES NO WARRANTY OR REPRESENTATION, EXPRESS OR IMPLIED, ABOUT NON-INFRINGEMENT, MERCHANTABILITY OR FITNESS FOR A PARTICULAR PURPOSE OF THE PRODUCTS. BUYER ACKNOWLEDGES THAT IT ALONE HAS DETERMINED THAT THE PRODUCTS WILL SUITABLY MEET THE REQUIREMENTS OF THEIR INTENDED USE.

Omron further disclaims all warranties and responsibility of any type for claims or expenses based on infringement by the Products or otherwise of any intellectual property right.

● **Buyer Remedy**

Omron's sole obligation hereunder shall be, at Omron's election, to (i) replace (in the form originally shipped with Buyer responsible for labor charges for removal or replacement thereof) the non-complying Product, (ii) repair the non-complying Product, or (iii) repay or credit Buyer an amount equal to the purchase price of the non-complying Product; provided that in no event shall Omron be responsible for warranty, repair, indemnity or any other claims or expenses regarding the Products unless Omron's analysis confirms that the Products were properly handled, stored, installed and maintained and not subject to contamination, abuse, misuse or inappropriate modification. Return of any Products by Buyer must be approved in writing by Omron before shipment. Omron Companies shall not be liable for the suitability or unsuitability or the results from the use of Products in combination with any electrical or electronic components, circuits, system assemblies or any other materials or substances or environments. Any advice, recommendations or information given orally or in writing, are not to be construed as an amendment or addition to the above warranty.

See http://www.omron.com/global/ or contact your Omron representative for published information.

Limitation on Liability; Etc

OMRON COMPANIES SHALL NOT BE LIABLE FOR SPECIAL, INDIRECT, INCIDENTAL, OR CONSEQUENTIAL DAMAGES, LOSS OF PROFITS OR PRODUCTION OR COMMERCIAL LOSS IN ANY WAY CONNECTED WITH THE PRODUCTS, WHETHER SUCH CLAIM IS BASED IN CONTRACT, WARRANTY, NEGLIGENCE OR STRICT LIABILITY.

Further, in no event shall liability of Omron Companies exceed the individual price of the Product on which liability is asserted.

Application Considerations

Suitability of Use

Omron Companies shall not be responsible for conformity with any standards, codes or regulations which apply to the combination of the Product in the Buyer's application or use of the Product. At Buyer's request, Omron will provide applicable third party certification documents identifying ratings and limitations of use which apply to the Product. This information by itself is not sufficient for a complete determination of the suitability of the Product in combination with the end product, machine, system, or other application or use. Buyer shall be solely responsible for determining appropriateness of the particular Product with respect to Buyer's application, product or system. Buyer shall take application responsibility in all cases.

NEVER USE THE PRODUCT FOR AN APPLICATION INVOLVING SERIOUS RISK TO LIFE OR PROPERTY WITHOUT ENSURING THAT THE SYSTEM AS A WHOLE HAS BEEN DESIGNED TO ADDRESS THE RISKS, AND THAT THE OMRON PRODUCT(S) IS PROPERLY RATED AND INSTALLED FOR THE INTENDED USE WITHIN THE OVERALL EQUIPMENT OR SYSTEM.

Programmable Products

Omron Companies shall not be responsible for the user's programming of a programmable Product, or any consequence thereof.

Disclaimers

Performance Data

Data presented in Omron Company websites, catalogs and other materials is provided as a guide for the user in determining suitability and does not constitute a warranty. It may represent the result of Omron's test conditions, and the user must correlate it to actual application requirements. Actual performance is subject to the Omron's Warranty and Limitations of Liability.

Change in Specifications

Product specifications and accessories may be changed at any time based on improvements and other reasons. It is our practice to change part numbers when published ratings or features are changed, or when significant construction changes are made. However, some specifications of the Product may be changed without any notice. When in doubt, special part numbers may be assigned to fix or establish key specifications for your application. Please consult with your Omron's representative at any time to confirm actual specifications of purchased Product.

Errors and Omissions

Information presented by Omron Companies has been checked and is believed to be accurate; however, no responsibility is assumed for clerical, typographical or proofreading errors or omissions.

PRECAUTIONS

This section provides general precautions for installing and using the DeviceNet Communications Unit and related devices.

The information contained in this section is important for the safe and reliable application of the DeviceNet Communications Unit. You must read this section and understand the information contained before attempting to set up or operate a DeviceNet network using a DeviceNet Communications Unit.

1 Intended Audience xvi
2 General Precautions xvi
3 Safety Precautions xvi
4 Operating Environment Precautions xvii
5 Application Precautions xviii
6 EC Directives xix

1 Intended Audience

This manual is intended for the following personnel, who must also have knowledge of electrical systems (an electrical engineer or the equivalent).

- Personnel in charge of purchasing FA systems.
- Personnel in charge of designing FA systems.
- Personnel in charge of installing and connecting FA systems.
- Personnel in charge of managing FA systems and facilities.

2 General Precautions

The user must operate the product according to the specifications described in the operation manuals.

Before using the product under conditions which are not described in the manual or applying the product to nuclear control systems, railroad systems, aviation systems, vehicles, combustion systems, medical equipment, amusement machines, safety equipment, and other systems, machines, and equipment that may have a serious influence on lives and property if used improperly, consult your OMRON representative.

Make sure that the ratings and performance characteristics of the product are sufficient for the systems, machines, and equipment, and be sure to provide the systems, machines, and equipment with redundant safety mechanisms.

This manual provides information for installing and operating OMRON DeviceNet products. Be sure to read this manual before operation and keep this manual close at hand for reference during operation.

⚠ **WARNING** It is extremely important that a PLC and all PLC Units be used for the specified purpose and under the specified conditions, especially in applications that can directly or indirectly affect human life. You must consult with your OMRON representative before applying a PLC system to the above mentioned applications.

3 Safety Precautions

⚠ **WARNING** Never attempt to disassemble any Units or touch the terminal block while power is being supplied. Doing so may result in serious electrical shock or electrocution.

⚠ **WARNING** Provide safety measures in external circuits (i.e., not in the Programmable Controller), including the following items, to ensure safety in the system if an abnormality occurs due to malfunction of the PLC or another external factor affecting the PLC operation. Not doing so may result in serious accidents.

- Emergency stop circuits, interlock circuits, limit circuits, and similar safety measures must be provided in external control circuits.
- The PLC will stop operation when its self-diagnosis function detects any error or when a severe failure alarm (FALS) instruction is executed. Unexpected operation, however, may still occur for errors in the I/O control section, errors in I/O memory, and other errors that cannot be detected by the self-diagnosis function. As a countermeasure for all such errors, external safety measures must be provided to ensure safety in the system.

- The PLC outputs may remain ON or OFF due to deposits on or burning of the output relays, or destruction of the output transistors. As a countermeasure for such problems, external safety measures must be provided to ensure safety in the system.
- When the 24-V DC output (service power supply to the PLC) is overloaded or short-circuited, the voltage may drop and result in the outputs being turned OFF. As a countermeasure for such problems, external safety measures must be provided to ensure safety in the system.
- Slice I/O Terminals will continue operating even if one or more I/O Units is removed from or falls out of the Slice I/O Terminal, i.e., the other I/O Units will continue control operations, including outputs. As a countermeasure for such a possibility, external safety measures must be provided to ensure safety in the system.

⚠ **WARNING** The CPU Unit refreshes I/O even when the program is stopped (i.e., even in PROGRAM mode). Confirm safety thoroughly in advance before changing the status of any part of memory allocated to Output Units, Special I/O Units, or CPU Bus Units. Any changes to the data allocated to any Unit may result in unexpected operation of the loads connected to the Unit. Any of the following operations may result in changes to memory status.

- Transferring I/O memory data to the CPU Unit from a Programming Device
- Changing present values in memory from a Programming Device
- Force-setting/-resetting bits from a Programming Device
- Transferring I/O memory files from a Memory Card or EM file memory to the CPU Unit
- Transferring I/O memory from a host computer or from another PLC on a network

4 Operating Environment Precautions

Install the system properly according to the directions in this manual.

Do not operate the control system in the following places.

- Locations subject to direct sunlight.
- Locations subject to temperatures or humidity outside the range specified in the specifications.
- Locations subject to condensation as the result of severe changes in temperature.
- Locations subject to corrosive or flammable gases.
- Locations subject to dust (especially iron dust) or salts.
- Locations subject to water, oil, or chemicals (General Units)
- Locations subject to acid or chemicals.
- Locations subject to shock or vibration.

Take appropriate and sufficient countermeasures when installing systems in the following locations:

- Locations subject to static electricity or other forms of noise.
- Locations subject to strong electromagnetic fields.
- Locations subject to possible exposure to radioactivity.
- Locations close to power supplies.

⚠ **Caution** The operating environment of the PLC System can have a large effect on the longevity and reliability of the system. Improper operating environments can lead to malfunction, failure, and other unforeseeable problems with the PLC System. Be sure that the operating environment is within the specified conditions at installation and remains within the specified conditions during the life of the system.

5 Application Precautions

Observe the following precautions when using the DeviceNet Communications Unit.

- Fail-safe measures must be taken by the customer to ensure safety in the event of incorrect, missing, or abnormal signals caused by broken signal lines, momentary power interruptions, or other causes.
- Provide external interlock circuits, limit circuits, and other safety circuits in addition to any provided within the PLC to ensure safety.
- Use the power supplies specified in the operation manuals.
- If the system is installed at a site with poor power supply conditions, take appropriate measures to ensure that the power supply remains within the rated voltage and frequency specifications.
- Provide circuit breakers and other safety measures to provide protection against shorts in external wiring.
- Always ground the system to 100 Ω or less when installing the system to protect against electrical shock.
- Mount the PLC securely on DIN Track or with screws.
- Always turn OFF the power supply when mounting a DeviceNet Communications Unit.
- Always turn OFF the communications power supply and the power supplies to the PLC and Slaves before attempting any of the following.
    - Mounting or removing a Unit such as an I/O Unit, CPU Unit, Memory Cassette, or Master Unit.
    - Mounting or removing Remote I/O Terminal circuit sections.
    - Assembling any devices or racks.
    - Setting rotary switches.
    - Connecting or wiring cables.
    - Connecting or disconnecting connectors.
- Do not attempt to disassemble, repair, or modify any Units.
- Be sure that all the terminal screws are tightened to the torque specified in the relevant manuals. Loose screws may cause fire, malfunction, or damage the Unit.
- Be sure that all the mounting screws and cable connector screws are tightened to the torque specified in the relevant manuals.
- Be sure that all the communications connector screws are tightened securely. (The communications connector screw torque is 0.5 to 0.6 N•m.)
- Do not remove the label from a Unit before wiring. Always remove the label after completing wiring, however, to ensure proper heat dispersion.
- Use the correct wiring components when wiring.
- Use crimp terminals for wiring. Do not connect bare stranded wires directly to terminals.
- Double-check all wiring before turning ON the power supply.

- When wiring or performing other tasks, do not allow metal objects such as wire strands to enter the Unit.
- Always follow the electrical specifications for terminal polarity, communications path wiring, power supply wiring, and I/O jumpers. Incorrect wiring can cause failures.
- Always wire the Unit as shown in the manual.
- Be sure to press terminals until they are fully seated.
- Mount Units only after checking terminal blocks completely.
- Be sure that the communications cable connectors and other items with locking devices are properly locked into place.
- Do not drop the Unit or subject the Unit to excessive vibration or shock. Doing so may cause malfunction or damage to the Unit.
- Use the special packing box when transporting the Unit. Ensure that the product is handled carefully so that no excessive vibration or impact is applied to the product during transportation.
- Check the user program for proper execution before actually running it with the system.
- Do not bend or pull the cables excessively.
- When connecting communications cables, always turn OFF the PLC power supply, all Slave power supplies, and all communications power supplies.
- Observe the following precautions when wiring the communications cables.
  - Wire the communications cables separately from the power lines or high-tension lines.
  - Do not bend the communications cables excessively.
  - Do not pull on the communications cables excessively.
  - Do not place objects on top of the communications cables.
  - Route communications cables inside ducts.
- Always enable the scan list before operation.
- Before clearing the scan list of a Unit that has user-allocated remote I/O, always confirm that no errors occur after the I/O Area setting is changed to fixed allocation.
- When adding a new node to the network, check that the new node's baud rate is the same as the baud rate set on the other nodes.
- Do not extend connection distances beyond the ranges given in the specifications.

6 EC Directives

DeviceNet products conform to EMS and low-voltage level directives as follows:

EMC Directives

OMRON devices that comply with EC Directives also conform to the related EMC standards, so that they can more easily be built in to other devices or the overall machine. The actual products have been checked for conformity to EMC standards. Whether they conform to the standards in the system used by the customer, however, must be checked by the customer.

EMC-related performance of the OMRON devices that comply with EC Directives will vary depending on the configuration, wiring, and other conditions of

the equipment or control panel on which the OMRON devices are installed. The customer must, therefore, perform the final check to confirm that devices and the overall machine conform to EMC standards.

1,2,3...

1. The DeviceNet Communications Units are designed for installation inside control panels. All DeviceNet Units must be installed within control panels.
2. Use reinforced insulation or double insulation for the DC power supplies used for the communications power supply, internal circuit power supply, and the I/O power supplies. The power supplies must also be able to provide stable output for 10 ms when a momentary power interruption occurs at the input.
3. The DeviceNet Communications Units conform to the EN61131-2 (Immunity Zone A), EN61000-6-2, and EN61000-6-4 standards, but the radiated emission characteristics (10-m regulations) may vary depending on the configuration of the control panel used, other devices connected to the control panel, wiring, and other conditions. You must therefore confirm that the overall machine or equipment complies with EC Directives.

The following examples shows how to reduce noise.

1,2,3...

1. Noise from the communications cable can be reduced by installing a ferrite core on the communications cable within 10 cm of the DeviceNet Communications Unit.

Ferrite Core (Data Line Filter): 0443-164151 (manufactured by Nisshin Electric)

Impedance specifications
25 MHz: 156 Ω
100 MHz: 250 Ω

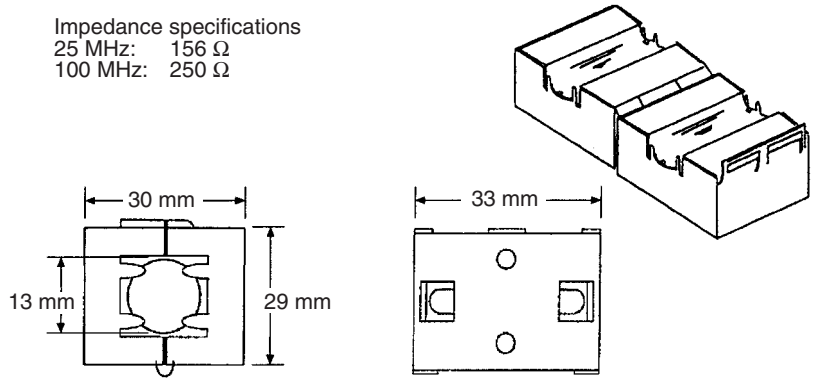

2. Wire the control panel with as thick and short cables as possible and ground to 100 Ω min.
3. Keep DeviceNet communications cables as short as possible and ground to 100 Ω min.

SECTION 1
Overview

This section provides an overview of the DeviceNet Communications Unit, including basic information such as the features and system configuration.

1-1 Overview of Slice I/O Terminals 2
1-2 Features and System Configuration 2
1-2-1 Features 2
1-2-2 System Configuration 4
1-3 Specifications 4
1-3-1 Communications Specifications 4
1-3-2 General Specifications 5
1-3-3 DeviceNet Communications Unit Specifications 5
1-4 List of Available Units 6
1-5 Basic Operating Procedure 7

1-1 Overview of Slice I/O Terminals

Slice I/O Terminals are building-block style Slaves that can be expanded in small I/O increments, so a system can be configured to exactly match various customer applications. Slice I/O Units communicate with the Master by remote I/O communications through a DeviceNet Communications Unit.

DeviceNet Communications Units are equipped with a network power supply monitor function and error history for network diagnosis and Slice I/O Units are equipped with troubleshooting functions such as the I/O power supply function.

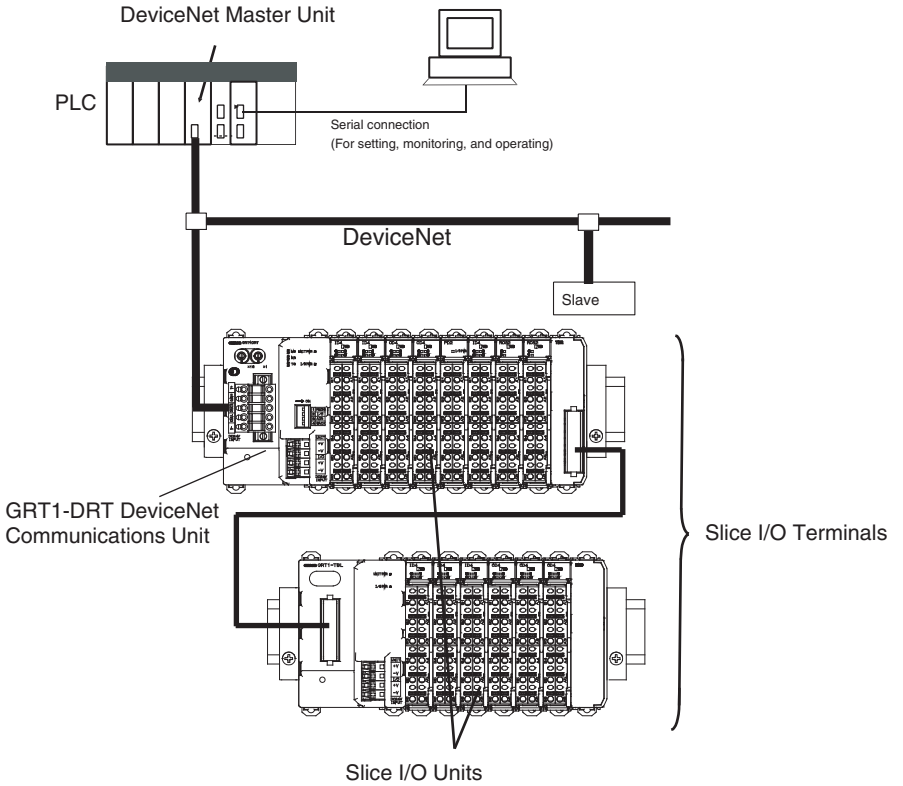

Up to 64 Slice I/O Units can be connected to one DeviceNet Communications Unit.

1-2 Features and System Configuration

1-2-1 Features

The DeviceNet Communications Unit for Slice I/O controls I/O between the DeviceNet Master and Slice I/O Units over the DeviceNet network.

Manage More Than One Slice I/O Units as One Slave

A single DeviceNet Communications Unit with up to 64 connected Slice I/O Units can be managed as a Slave (a single module) from the DeviceNet Master.

Remote I/O Communications

Remote I/O communications can be used to share I/O data between the Master and more than one Slice I/O Units through the DeviceNet Communications Unit.

In addition to actual I/O data, various status information can be allocated in the Master by making custom settings with the Configurator.

Simplified Startup

The DeviceNet Communications Unit can be set up easily, just by wiring the Unit, setting the DeviceNet node address on the Unit's rotary switches, and making simple DIP switch settings.

The Unit's configuration is read automatically when the power is turned ON and I/O is also automatically allocated in the Slice I/O Units. It is not necessary to make any settings with a special Programming Device.

Simplified I/O Wiring

All of the Slice I/O Units that connect to a DeviceNet Communications Unit are equipped with screw-less clamp terminal blocks. Wiring to external I/O is accomplished just by inserting the wire into the terminals, eliminating the need to tighten terminal screws.

Table Registration

The configuration of the Slice I/O Units (mounting order and I/O size) connected to a DeviceNet Communications Unit can be registered in a table simply by switching a pin on the DeviceNet Communications Unit's DIP switch. Once the table has been registered, the actual configuration is compared to the registered configuration each time that the power is turned ON. If the configuration does not match, a status flag can be turned ON in the DeviceNet Master to indicate the error.

Communications Error History Monitor

The communications error history in the DeviceNet Communications Unit can record the four most recent communications errors in the DeviceNet network and the 64 most recent Slice I/O Terminal errors. The communications error information (communications error cause code and communications power supply voltage when error occurred) can be read with an explicit message command or from the Configurator.

Online Replacement of I/O Units

The Slice I/O Unit's circuit section can be removed, so it isn't necessary to turn OFF the power to replace a Unit. Communications can be maintained in the remaining (connected) Units.

Parameter Backup and Restore

Before replacing a Slice I/O Unit for maintenance, the parameter data set in the I/O Unit can be backed up in the DeviceNet Communications Unit by switching a pin on the Communications Unit's DIP switch. After the I/O Unit has been replaced, another DIP switch operation can be used to select the mode that automatically writes the backed-up parameter data to the appropriate Units.

Automatic Baud Rate Recognition

The DeviceNet Communications Unit automatically detects the Master's communications baud rate, so it isn't necessary to set the baud rate. (If the Master's baud rate has been changed, the DeviceNet Communications Unit must be turned OFF and then ON again to change its baud rate.)

Network Power Supply Voltage Monitor

The DeviceNet network's power supply voltage values (present, maximum, and minimum values) are recorded in the DeviceNet Communications Unit. The Configurator can be used to read the recorded information. Furthermore, a warning voltage level can be set in the DeviceNet Communications Unit in order to notify the Master if the voltage drops below that preset warning level.

Unit Power ON Time Monitor

This function records the total time that the DeviceNet Communications Unit's internal circuit power has been ON. The Configurator or explicit messages can be used to read the information. Furthermore, a warning voltage level can be set in the DeviceNet Communications Unit in order to notify the Master if the set warning time is exceeded.

Unit Comment

A user-set name can be assigned to each DeviceNet Communications Unit and recorded in the Unit. When making settings or monitoring operation, the comments make it easy to identify individual Units based on their application or location.

Last Maintenance Date The dates on which maintenance is performed can be written to the DeviceNet Communications Unit. The recorded date shows when maintenance is required next.

1-2-2 System Configuration

The DeviceNet Communications Unit connects to the Master by a network cable and it connects to the Slice I/O Units by directly coupling the Units with slide connectors.

The I/O Unit data in the DeviceNet Communications Unit is shared with the Master's Input and Output Areas through the DeviceNet network. The I/O Units' data is collected in the DeviceNet Communications Unit and exchanged with the Master asynchronously.

It is also possible to send explicit message commands addressed to the DeviceNet Communications Unit.

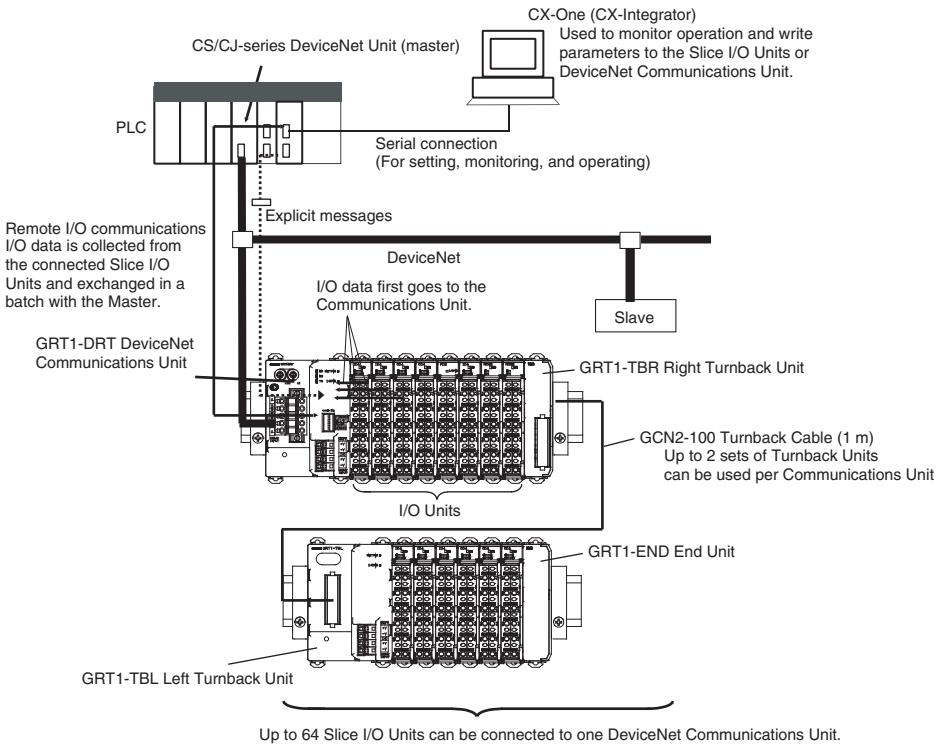

Note Always install an End Unit on the last I/O Unit in the last node.

1-3 Specifications

1-3-1 Communications Specifications

Item	Specification
Number of connectable Slice I/O Units	64 Units max.
Baud rate	3 Mbps
Communications signal level	RS-485
Turnback Cable	Length 1 m max., up to 2 cables can be connected.

Item	Specification
Total number of I/O points	1,024 points max. (128 bytes) (combined total for inputs and outputs)
Slice I/O Terminal connections	Building-block style configuration with slide connectors (Terminals connect with Turnback Cables.)
Baseblock power supply	Voltage: 24 V DC Current: 4 A
Event messaging	Supported.

1-3-2 General Specifications

Item	Specification
Ambient operating temperature	–10 to 55°C (with no icing or condensation)
Ambient operating humidity	25% to 85%
Ambient storage temperature	–25 to 65°C (with no icing or condensation)
Noise immunity	Conforms to IEC 61000-4-4, 2.0 kV
Vibration resistance	10 to 60 Hz: 0.7 mm double amplitude 60 to 150 Hz: 50 m/s^2
Shock resistance	150 m/s^2
Withstand voltage	500 VAC (between isolated circuits)
Enclosure rating	IP20

1-3-3 DeviceNet Communications Unit Specifications

Item		Specification
Model number		GRT1-DRT
Number of I/O points		1,024 points max. (128 bytes) (combined total for inputs and outputs)
Number of connectable Units		64 Slice I/O Units max.
Slice I/O Unit unit numbers		1 to 64 (assigned automatically)
Slice I/O Unit data size		0, 2, or 4 bits 0 to 16 words (complete words)
Status flags		Use 1 word (for Communications Unit status flags)
Parameter backup and restore		Can back up and restore up to 2 KB of data per Unit.
Network power supply	Voltage	11 to 25 V DC
	Current	22 mA
	Inrush current	6 A max. (at cold start)
I/O power supply		Voltage: 24 V DC Current: 4 A
Indicators	MS (Two-color LED)	Indicates the DeviceNet Communications Unit's operating status
	NS (Two-color LED)	Indicates the host communications (DeviceNet) status.
	TS (Two-color LED)	Indicates the Slice I/O Terminal's operating status
	PWR (One-color LED)	Indicates the Unit power supply status
	IO PWR (One-color LED)	Indicates the I/O power supply status

Item		Specification
Switches	Node-address setting switches	Decimal rotary switches Set the Unit's node address as a DeviceNet Slave.
	Other switches	DIP switch Pin 1: Create/Enable registered table (Switch from OFF to ON to register the table. Leave ON to enable the table.) Pin 2: Always OFF. Pin 3: Automatic restore (Auto-restore enabled when ON.) Pin 4: Backup trigger (Switch from OFF to ON two times to backup the parameter data.)
Connector		One open connector for DeviceNet, with screws The XWG4-05C4-TF-D Multi-drop Connector can be connected.
Terminals		Two terminals for I/O power supply Two terminals for Unit power supply
Power consumption		3 W
Power consumption per block		80 W max. (Unit power supply) (If more than 80 W is required, separate into blocks using Turnback Units.)
Block separation		Basic block plus up to two other blocks
I/O current consumption		4 A max.
Weight		137 g
Accessories		XW4G-05C4-TF-D Connector For multi-drop node connection. Connector screws provided.

1-4 List of Available Units

The following table shows the Units that can be used in Slice I/O Terminals as well as the devices that can be connected. Refer to the *GRT1 Series Slice I/O Units Operation Manual* for details, such as Slice I/O Unit specifications.

Model number	Specifications
GRT1-DRT	DeviceNet Communications Unit (Up to 64 I/O Units can be connected.)
GRT1-ID4	Slice I/O Unit with 4 DC inputs (NPN)
GRT1-ID4-1	Slice I/O Unit with 4 DC inputs (PNP)
GRT1-OD4	Slice I/O Unit with 4 DC outputs (NPN)
GRT1-OD4-1	Slice I/O Unit with 4 DC outputs (PNP)
GRT1-ROS2	Slice I/O Unit with 2 relay outputs
GRT1-AD2	Slice I/O Unit with 2 analog inputs
GRT1-DA2V	Slice I/O Unit with 2 voltage analog outputs
GRT1-DA2C	Slice I/O Unit with 2 current analog outputs
GRT1-END	End Unit
GRT1-PD2	I/O Power Supply Unit
GRT1-TBR	Right Turnback Unit (Mounts to the right side of I/O Terminal.)
GRT1-TBL	Left Turnback Unit (Mounts to the left side of I/O Terminal.)
GCN2-100	Turnback Cable (1 m)

1-5 Basic Operating Procedure

The following procedure shows the basic steps required before using the Slice I/O Terminals.

Operating Procedure

1,2,3...

1. Connect the DeviceNet Communications Unit to the Master and connect the desired Slice I/O Units.
2. Turn ON the power supply to the DeviceNet Communications Unit.
3. Turn ON (from OFF to ON) pin 1 of the DIP switch on the front of the DeviceNet Communications Unit. When pin 1 is turned ON, the existing Slice I/O Unit configuration (connection order and I/O size) is registered in the DeviceNet Communications Unit as a registered table. (After the table is registered, leave pin 1 ON to enable the table.)
4. The next time that the power is turned ON, the connected Slice I/O Unit configuration at that moment is automatically compared to the registered table and any Slice I/O Units that do not match the registered table (connection order or I/O size) will not participate in I/O communications. I/O communications will start with the other Slice I/O Units.

Note

(1) When a communications error has occurred, the DeviceNet Communications Unit's TS indicator will flash red and the affected Slice I/O Unit's TS indicator will flash red. At the same time, the error code and error details code will be stored in the DeviceNet Communications Unit's error history.

(2) For details on the operating procedures, refer to *SECTION 4 Setup and Operating Procedures*.

SECTION 2
Component Names and Functions

This section describes the names and functions of the components in the DeviceNet Communications Unit.

2-1 Nomenclature and Dimensions 10
2-1-1 LED Indicators 11
2-1-2 Switch Settings 13
2-2 Node Address Settings and I/O Allocation 14
2-2-1 Setting the Node Address 14
2-2-2 Unit Numbers of Slice I/O Units (Automatically Allocated) 15
2-2-3 I/O Allocation to the Slice I/O Terminal's Master Unit 16
2-2-4 I/O Allocation with the Configurator (Ver. 2.□ or Higher) 20
2-3 Unit Functions 23
2-3-1 Table Registration Function 24
2-3-2 Backup Function 26
2-3-3 Automatic Restore Function 26
2-3-4 Online Replacement Function 28
2-3-5 Automatic Baud Rate Recognition 29
2-3-6 Network Power Supply Voltage Monitor 29
2-3-7 Unit Conduction Time Monitor 30
2-3-8 Unit Comments 32
2-3-9 Network Communications Error History Monitor 34
2-3-10 I/O Communications Error History Monitor 35
2-3-11 Last Maintenance Date 37

2-1 Nomenclature and Dimensions

Nomenclature

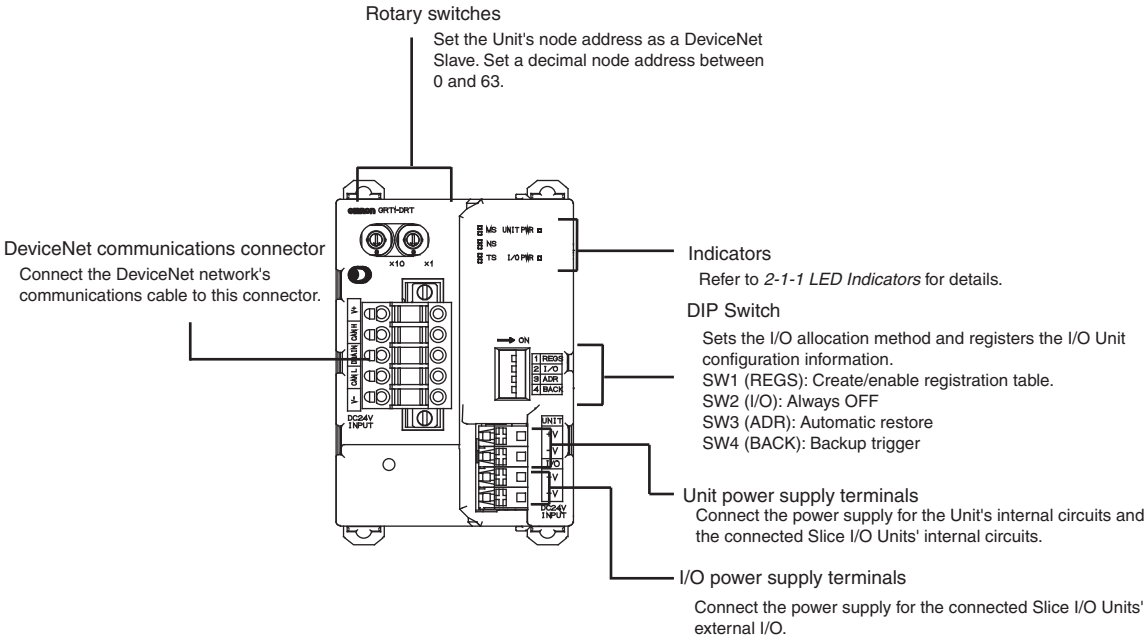

Dimensions (mm)

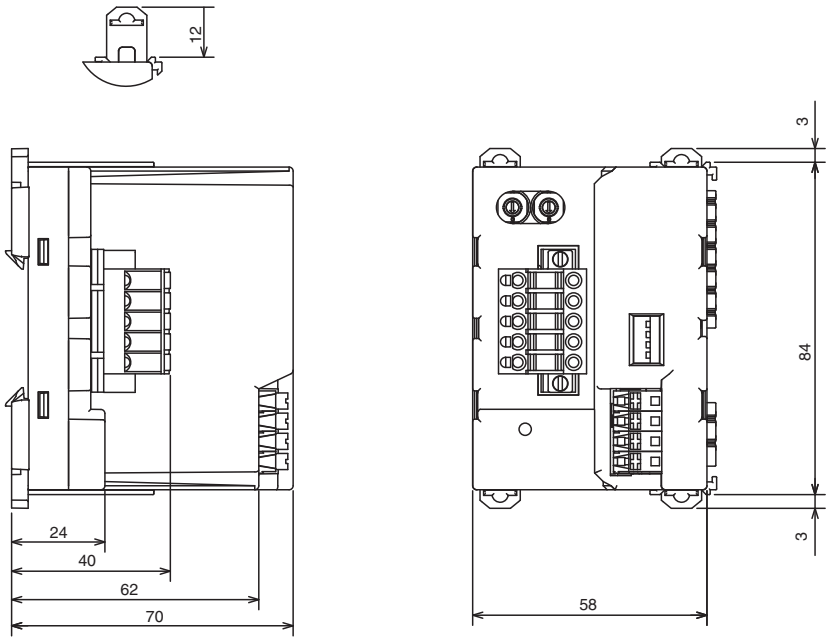

Slice I/O Unit Structure

The Slice I/O Unit is made up of three blocks, as shown in the following diagram. When replacement is necessary, individual blocks can be replaced.

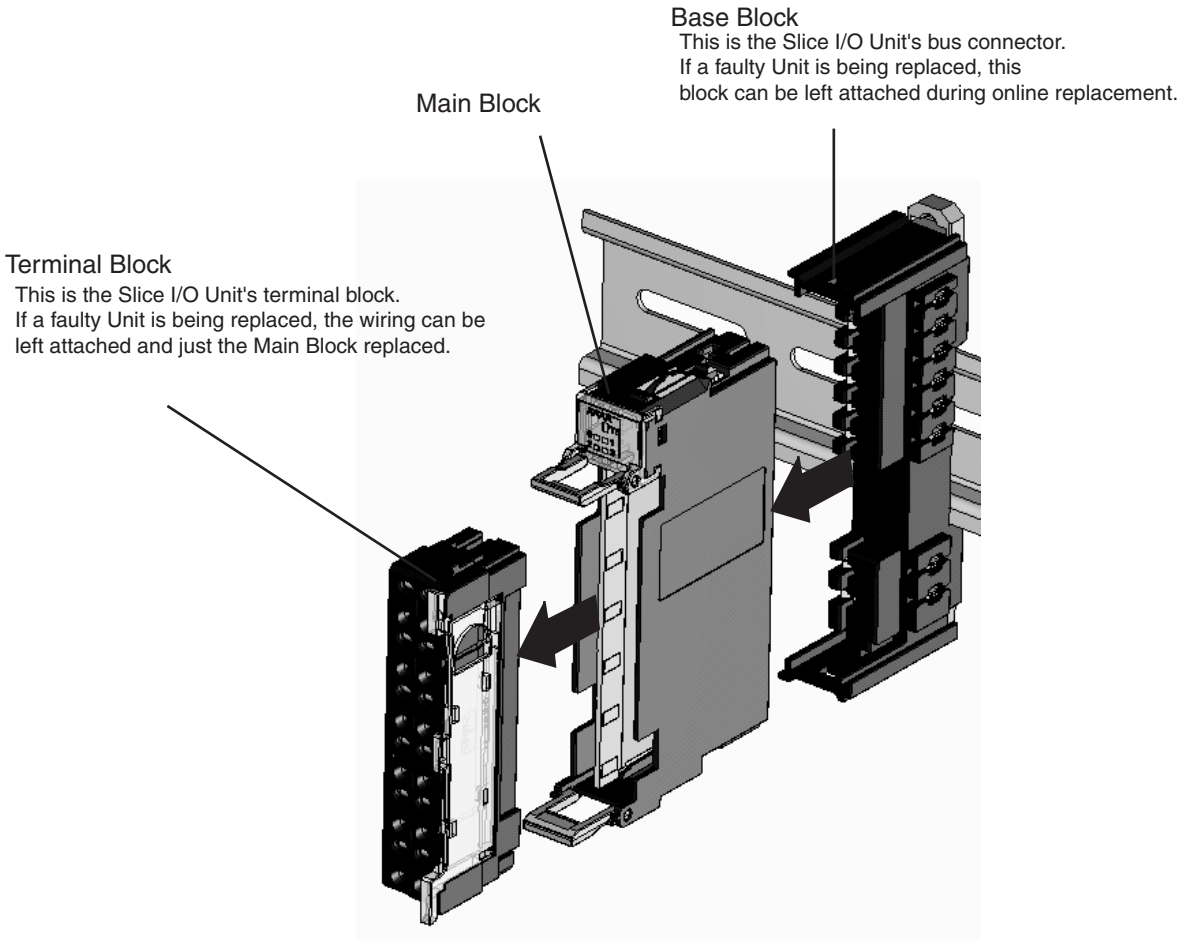

Note Refer to the *GRT1 Series Slice I/O Units Operation Manual* (W455) for details such as Slice I/O Unit specifications and standard models.

2-1-1 LED Indicators

The DeviceNet Communications Unit's LED indicators indicate the status of the Unit, the DeviceNet network, and communications between the Unit and Slice I/O Units.

Name	Color	Status	Meaning
MS DeviceNet Communications Unit status	Green	MS	Normal status (DeviceNet Communications Unit operating normally)
	Red	MS	Non-recoverable, fatal error occurred. • Watchdog timer error • RAM error
		MS	Recoverable, non-fatal error occurred. • EEPROM checksum error • Parameter setting logic error • EEPROM hardware error
	---	MS	No power • The Unit's power supply is OFF. • The Unit is being reset. • The Unit is waiting for initialization.

Name	Color	Status	Meaning
NS DeviceNet network status	Green	NS	Unit is online with communications established (normal network status).
		NS	Unit is online, but communications are not established (waiting for communications from Master).
	Red	NS	Fatal communications error occurred. (Network communications are not possible.) • Node address duplicated • Bus Off error
		NS	Non-fatal communications error occurred. • Communications timeout
	---	NS	Offline or power OFF • Waiting for completion of node address duplication check by Master. • Power is not being supplied to the DeviceNet Communications Unit.
TS Slice I/O Terminal communications status	Green	TS	Communicating with I/O Unit (communications established).
		TS	I/O Unit joining system. (Flashing once every 1 s)
		TS	Backup/Restore function operating. (Flashing once every 0.5 s) • Restoring settings to I/O Unit, backup function operating • Downloading I/O Unit settings.
	Red	TS	Fatal communications error occurred.
		TS	Failure occurred while restoring settings to I/O Unit or downloading I/O Unit settings. (Lit for 2 s)
		TS	Non-fatal communications error occurred. • Communications timeout • Verification error occurred with registered table. • Different model Unit detected after I/O Unit replacement.
	---	TS	• Power not being supplied. • Communications haven't started with I/O Unit. • Overcurrent detected.
UNIT PWR Unit power supply status	Green	MS	24 V is being supplied to the Unit power supply.
		MS	Unit power supply is OFF.
IOPWR External I/O power supply status	Red	MS	24 V is being supplied to the I/O power supply.
		MS	I/O power supply is OFF.

2-1-2 Switch Settings

Note The DeviceNet Communications Unit detects the Master's communications baud rate automatically, so it is not necessary to set the baud rate.

Rotary Switches

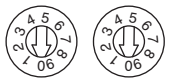

Use the rotary switches to set the Unit's DeviceNet node address between 00 and 63. (Do not set values 64 to 99.)

DIP Switch

The DIP switch is used for the Unit settings and operations described below. The DIP switch functions are only introduced here. For details, refer to *2-3 Unit Functions*.

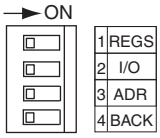

Create/Enable Registration Table (REGS, pin 1)

If pin 1 is turned from OFF to ON while the Unit's power is ON, the existing Slice I/O Unit configuration (connection order and I/O size) is registered in the DeviceNet Communications Unit as a registered table.

If pin 1 is ON when the Unit's power is turned ON, the actual Slice I/O Unit configuration at startup is automatically compared to the registered table. Any Slice I/O Units that do not match the registered table will not participate in Slice I/O communications.

Switch setting	Function
ON	Registered table is enabled. (If there is a verification error, the affected Unit will not participate in communications.)
OFF	Registered table is disabled. (All Units participate in communications.)
OFF to ON	Register I/O Unit table. (Of course, pin 1 must be turned OFF to ON while the Unit is ON.)
ON to OFF	Clear registered table.

I/O Allocation Mode (I/O, pin 2)

Always leave pin 2 set to OFF.

Automatic Restore (ADR, pin 3)

When pin 1 is ON (registered table enabled) and pin 3 is ON, parameter data is automatically restored to the Slice I/O Units that had parameter data backed up.

Switch setting	Function
ON	Automatic restore function enabled (when pin 1 is ON).
OFF	Automatic restore function disabled.

Backup Trigger (BACK, pin 4)

When pin 1 is ON (registered table enabled) and pin 4 is turned OFF to ON, the parameter data of all connected Slice I/O Units is backed up in the Communications Unit.

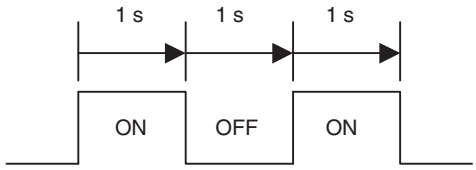

The backup operation starts after pin 4 is turned from ON to OFF to ON within 3 seconds.

Switch setting	Function
ON	Switch ON to OFF to ON to start the parameter backup (when pin 1 is ON).
OFF	---

Note The factory setting is OFF for all DIP switch pins.

2-2 Node Address Settings and I/O Allocation

I/O words in the Master (the CPU Unit's I/O memory) are allocated to the Slice I/O Terminal based on the DeviceNet Communications Unit's node address setting. Once the DeviceNet node address is set, I/O will be allocated to the Slice I/O Terminal by default and remote I/O communications will start automatically.

Note When the power is turned ON, unit numbers are allocated automatically to the Slice I/O Units in the Slice I/O Terminal.

2-2-1 Setting the Node Address

The Slice I/O Terminal's node address as a DeviceNet Slave is set with the rotary switches on the front of the DeviceNet Communications Unit. The node address determines the starting word of the area allocated to the Slice I/O Terminal.

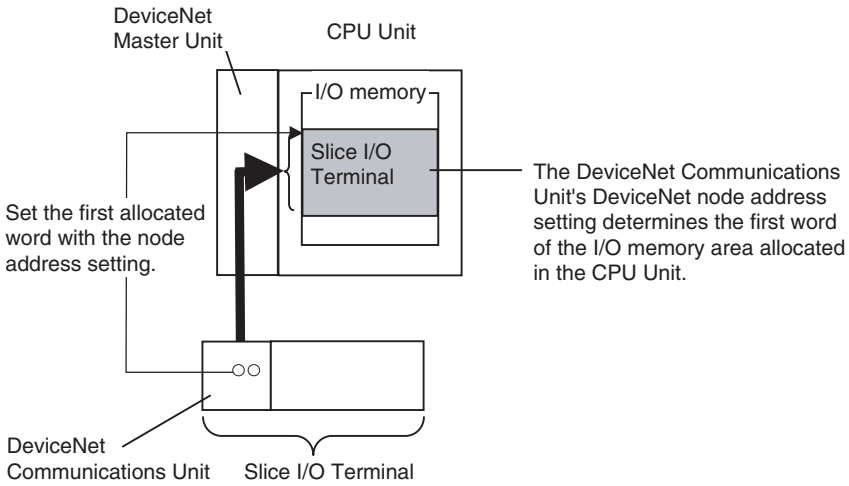

DeviceNet Node Address Setting

The left rotary switch sets the ten's digit, and the right rotary switch sets the one's digit. Any number in the allowed range (00 to 63) can be set as long as it is not set on another node (Master, Slave, or Configurator) in the network.

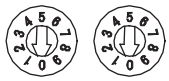

Note

(1) Always turn OFF the DeviceNet communications power supply and DeviceNet Communications Unit's power supply before setting the node address.

(2) The factory default setting for the node address is 00.

(3) If the node address is duplicated on another node, a node address duplication error will occur and the Unit will not be able to join the network.

2-2-2 Unit Numbers of Slice I/O Units (Automatically Allocated)

The numbers used to identify the Slice I/O Units in a Slice I/O Terminal are called the Slice I/O Units' unit numbers. These unit numbers are allocated automatically from left to right starting from #1, when the power is turned ON. It is not necessary for the user to set these numbers.

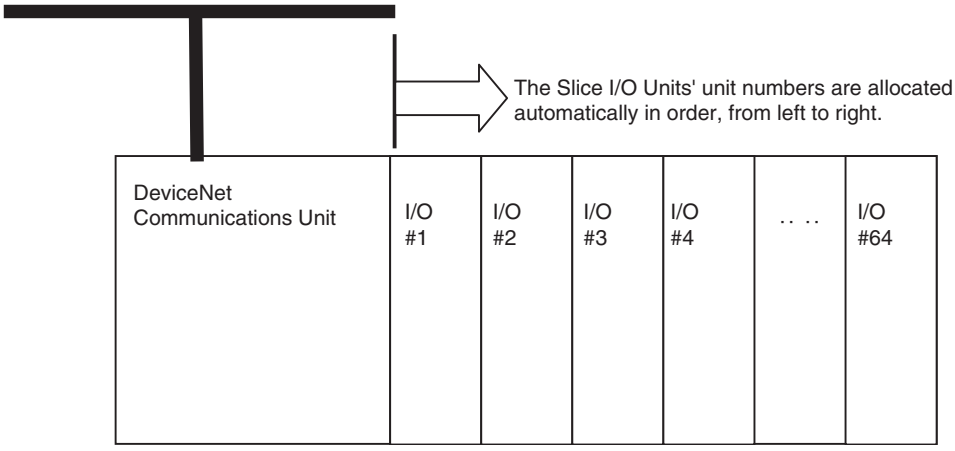

Note The unit numbers allocated automatically to the Slice I/O Units are unrelated to the DeviceNet node address set with the rotary switches.

2-2-3 I/O Allocation to the Slice I/O Terminal's Master Unit

The Slice I/O Terminal's I/O data is allocated in the I/O memory of the CPU Unit in which the Master Unit is mounted and the I/O memory location is determined by the DeviceNet Communications Unit's DeviceNet node address.

The user can set the Slice I/O Terminal's allocated data freely with a DeviceNet Configurator.

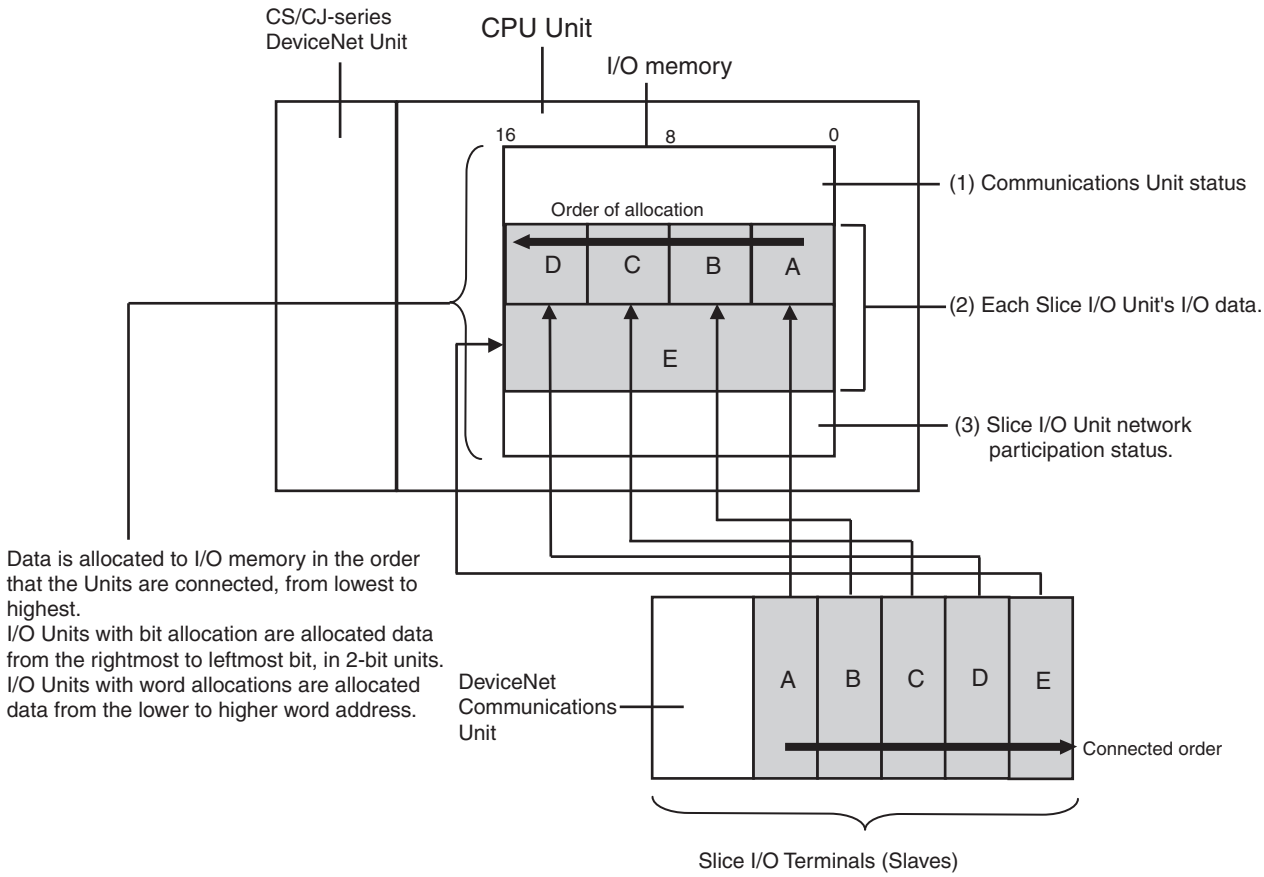

I/O Allocation Example

I/O data is allocated to the I/O Units in the order that they are connected to the Communications Unit, regardless of the I/O Units' models. Unless special allocation data settings are selected with the Configurator, data is allocated from the first word starting with the Communications Unit's status flags and then the leftmost I/O Unit's data.

Data in the Master's input and output areas is allocated to the Slice I/O Units based on their unit numbers.

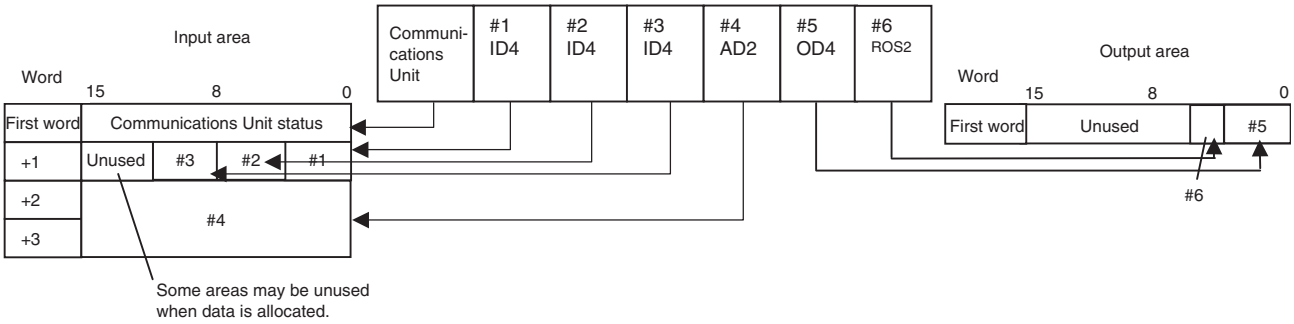

Note I/O Units with bit allocation (such as the GRT1-ID4/OD4) are allocated data in 2-bit units. I/O Units with word allocation (such as the GRT1-AD2) are allocated data in 1-word units. The following example shows the allocation to an Output Unit.

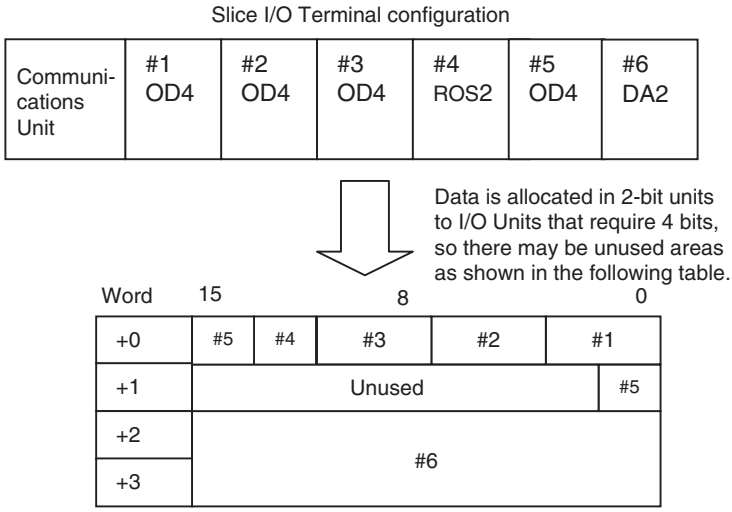

Allocated Data Patterns

The following kinds of data can be allocated in the Master. The Configurator can be used to freely select the kinds/combination of data allocated. If the Configurator isn't used to select the data pattern, the default setting is used, which is I/O data + Communications Unit status flags (pattern number 1 in the following table).

Data Allocated to Master

Allocated data pattern	
1	I/O data (inputs) + Communications Unit status flags
2	I/O data (inputs and outputs) only
3	Communications Unit status flags only
4	Slice I/O Unit communications participating/withdrawn flags only

Note The Communications Unit's status flags and Slice I/O Units' communications participating/withdrawn flags cannot be allocated in the output area.

Allocated Data Size

Data type	Data size
I/O data (input and output)	When only the actual I/O data is allocated: 64 input words max. or 64 output words max. The GRT1-ID4(-1) and GRT1-OD4(-1) use 4 bits per Unit. The GRT1-ROS2 uses 2 bits.
Communications Unit status flags	1 word
Slice I/O Unit communications participating/withdrawn flags	Participating flags: 4 words Withdrawn flags: 4 words Total: 8 words
I/O data (inputs) + Communications Unit status flags	Amount of I/O data being used + 1 word

Note When allocating data, be sure that it does not exceed the maximum that can be allocated (64 words).

Status Flags

The status flags can be allocated in the Master independently or together with the I/O data. There are two kinds of status flags, the Communications Unit's status flags and I/O Units' communications participating/withdrawn flags, and these status flags must be allocated in separate areas.

Communications Unit's Status Flags

These flags can be used to monitor the status of the connection with the Master and the status of Slice I/O Units connected to the Communications Unit. The status flags take up 2 words and the information is transferred to the Master.

With the default data pattern (pattern 1), these status flags are allocated in the Master together with the I/O data. The status flags can also be read with the Configurator or an explicit message command.

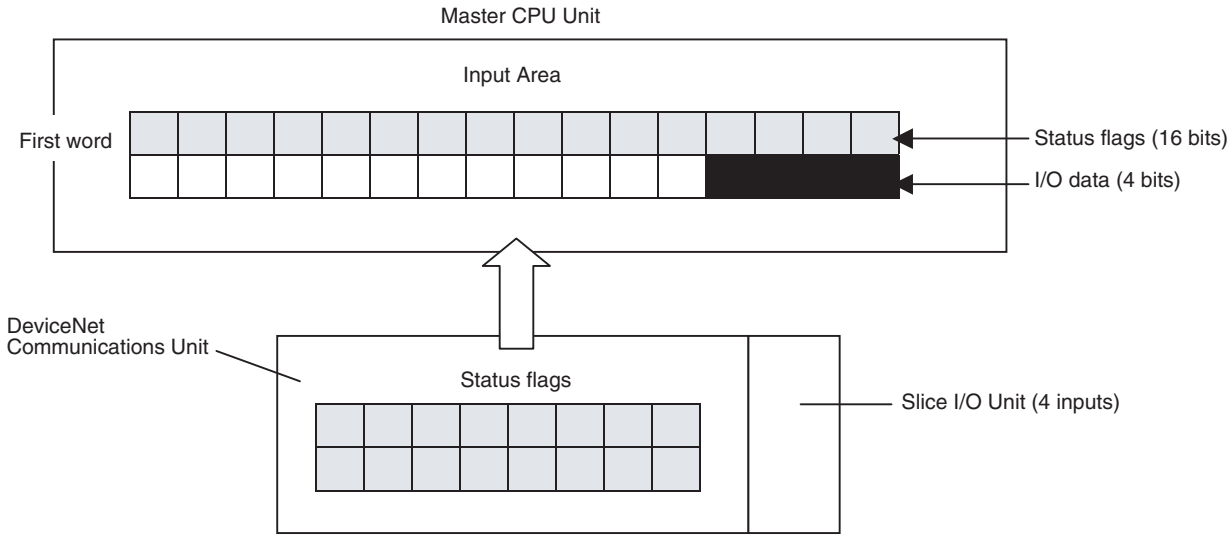

Bit	Content	Description
0	Slice I/O Bus Communications Error Flag	Monitors the status of Slice I/O Terminal communications.
1	Reserved	---
2	Slice I/O Unit Warning Flag 0: Normal; 1: Error detected	Indicates a minor Slice I/O Unit error. This flag goes ON when there is an error in any one of the connected Slice I/O Units.
3	Reserved	---
4	Slice I/O Unit Alarm Flag 0: Normal; 1: Error detected	Indicates a major Slice I/O Unit error. This flag goes ON when there is an error in any one of the connected Slice I/O Units.

Bit	Content	Description
5	Reserved	---
6	Reserved	---
7	Reserved	---
8	Reserved	---
9	Reserved	---
10	Reserved	---
11	Network Power Supply Voltage Monitor Error Flag 0: Normal; 1: Error (monitor value reached)	Monitors the network power supply voltage using the voltage threshold set with the network power supply voltage monitor function.
12	Unit Maintenance Flag 0: Normal; 1: Error (monitor value reached)	Monitors the Unit's operating time the power ON time threshold set with the Unit power ON time monitor function.
13	Automatic Restore Monitor Flag 0: Restore successful; 1: Restore failed	Indicates whether or not the automatic parameter restoration to the Slice I/O Units was completed properly. This flag will be ON if the restore operation failed and OFF if data was restored properly to all Units.
14	Communications Unit Error Flag 0: Normal; 1: Error occurred	This is the overall Unit status flag. This flag will be ON if any one of the other flags (bits 0 to 13) is ON.
15	I/O Refreshing Flag 0: I/O communications stopped 1: I/O communications normal	Indicates whether I/O data is being exchanged normally.

Slice I/O Unit Participating/Withdrawn Flags

These flags can be used to monitor the connection status (participating or withdrawn) of the Slice I/O Units connected to the Communications Unit. There are always 8 words allocated to the Participating/Withdrawn Flags (4 words for the Participating Flags and 4 words for the Withdrawn Flags), regardless of the number of I/O Units that are connected.

These flags are not allocated in the Master by default. The flags must be allocated with the Configurator.

These flags can be read with the Configurator or an explicit message command.

Table name	Description
Participating table	ON: Participating (properly allocated to Master) OFF: Not participating (An I/O Unit will not join communications if the registered table is enabled and a verification error occurred with the Unit.)
Withdrawn table	ON: Communications error occurred or the Unit was withdrawn after participating in communications. OFF: Never joined communications or participating normally.

		15 Bit	14 Bit	13 Bit	12 Bit	11 Bit	10 Bit	9 Bit	8 Bit	7 Bit	6 Bit	5 Bit	4 Bit	3 Bit	2 Bit	1 Bit	0 Bit
Participating table	0	16	15	14	13	12	11	10	9	8	7	6	5	4	3	2	1
	+1	32	31	30	29	28	27	26	25	24	23	22	21	20	19	18	17
	+2	48	47	46	45	44	43	42	41	40	39	38	37	36	35	34	33
	+3	64	63	62	61	60	59	58	57	56	55	54	53	52	51	50	49
Withdrawn table	+4	16	15	14	13	12	11	10	9	8	7	6	5	4	3	2	1
	+5	32	31	30	29	28	27	26	25	24	23	22	21	20	19	18	17
	+6	48	47	46	45	44	43	42	41	40	39	38	3	36	35	34	33
	+7	64	63	62	61	60	59	58	57	56	55	54	53	52	51	50	49

Note

(1) Each bit corresponds to the unit number of a connected Slice I/O Unit. (Up to 64 Units can be monitored.)

(2) Each Unit's status can also be monitored with the TS indicator on the front of the I/O Unit.

2-2-4 I/O Allocation with the Configurator (Ver. 2.□ or Higher)

The following procedure shows how to use the Configurator to select and allocate particular I/O data or status flags in the Master instead of using the default settings.

Allocating I/O Data from the Master Unit

1,2,3...

1. In the Master's Edit Device Parameters Window, select the DeviceNet Communications Unit to be set, and specify the connection in the Advanced Setting Window. Select the I/O data (pattern) in the connection path setting.
2. In the Master's Edit Device Parameters Window, allocate Slave I/O.

   Note For details on connections and connection paths, refer to *Appendix B DeviceNet Connections* in the *DeviceNet Units Operation Manual* (W380).

The following setting example shows how to allocate 4 inputs + Communications Unit status flags as the data.

Example: 4 inputs + 4 inputs + Status flags

Bits	15	8	0
CIO 3300	Communications Unit status flags		
CIO 3301	Unused	4 inputs	4 inputs

Procedure

1,2,3...

1. In the Network Configuration Window, select the Master Unit, and double-click or click the right mouse button and select ***Parameter – Edit – General***, and then select the Smart Slave to be set.

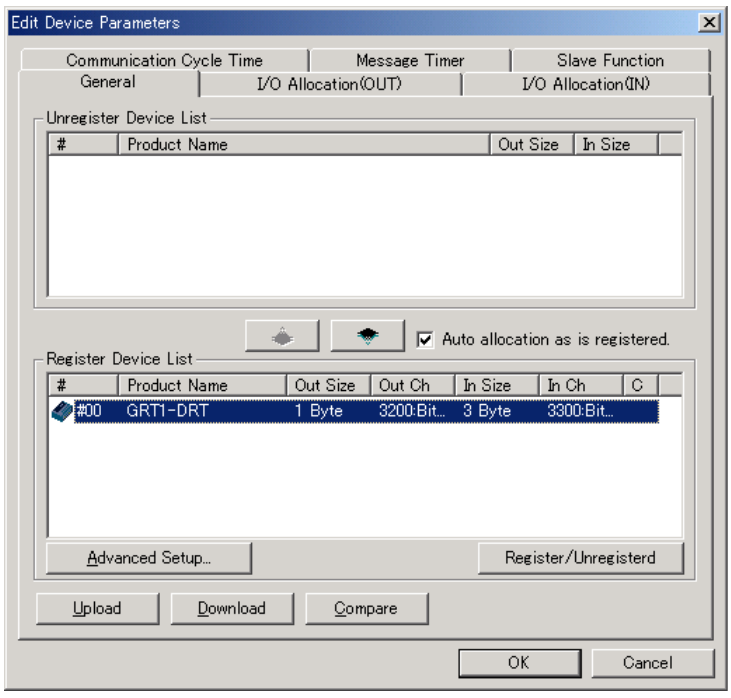

2. Click the **Advanced Setup** Button, click the **Connection** Tab, and select ***User Setup***. Select ***Use Poll Connection*** and ***Use COS Connection*** and then select ***output data***, ***input data***, and ***generic status*** for the respective connection paths. In this example, the IN size for COS connection is set to ***generic status***, the IN size for poll connection is set to ***input data***, and OUT size for poll connection is set to ***output data***.

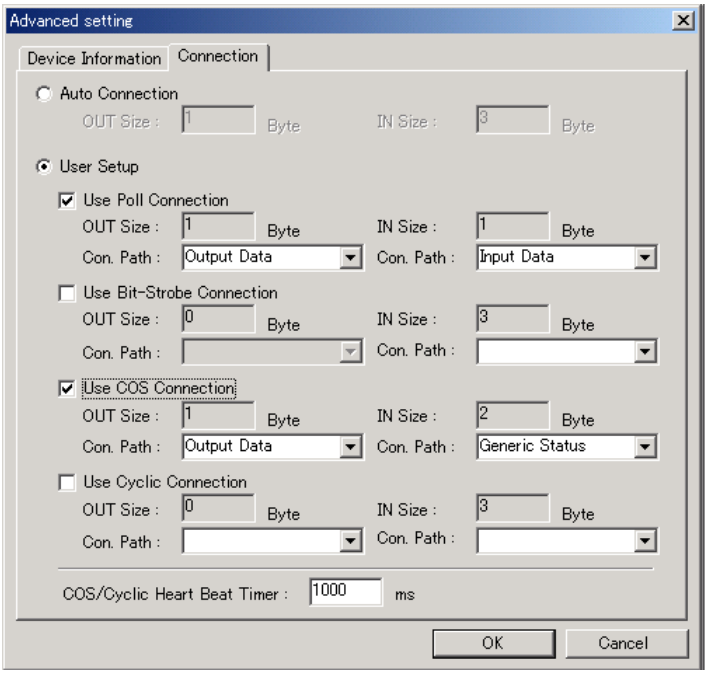

3. Click the **OK** Button.

Note If there are checks in the check boxes but the connection path settings are left blank, the following settings will be made automatically.

	IN (Smart Slave to Master Unit)	OUT (Master Unit to Smart Slave)
Poll	Input Data + Generic Status	Output Data
Bit-Strobe	Input Data + Generic Status	Not set.
COS	Input Data + Generic Status	Not set.
Cyclic	Input Data + Generic Status	Not set.

4. Click the **I/O Allocation (IN)** Tab and edit the I/O allocations.
   Select the Smart Slave to be set and click the **Edit** Button to display the Edit I/O Allocate Window.
   Set the *Poll* settings (indicates input data) to block 1, allocated 3300.
   Set the *COS* settings (indicates generic data) to block 2, allocated 3500.

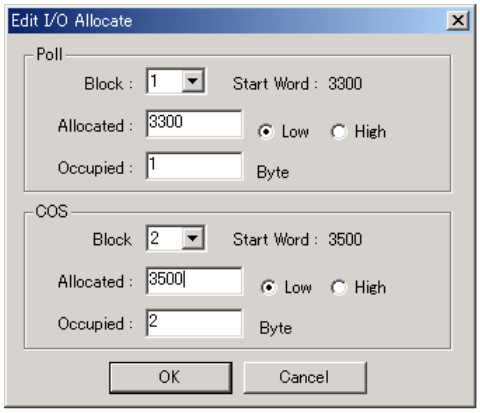

5. Click the **OK** Button.

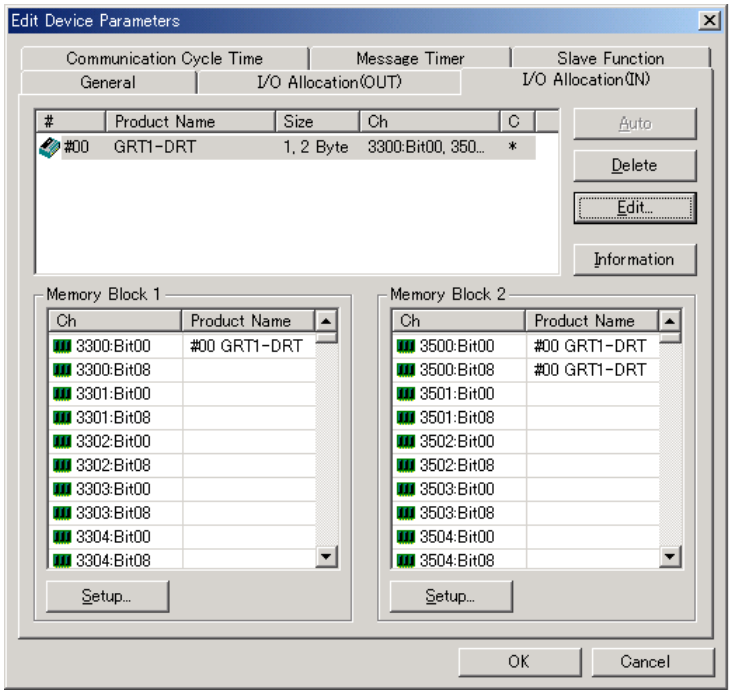

6. In the same way as above, click the **I/O Allocation (OUT)** Tab and edit the I/O allocations. Set to block 1, allocated 3200.

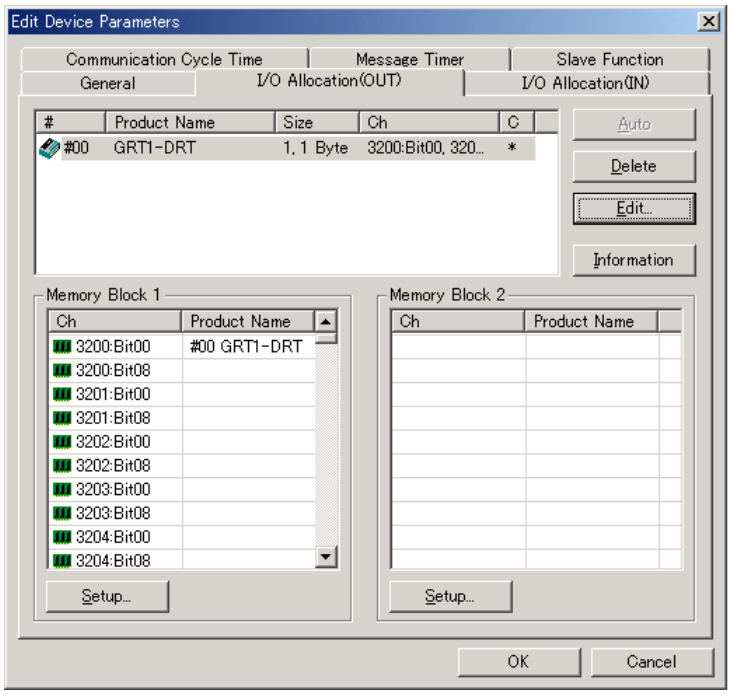

7. Return to the General Tab Page and click **Download**.

Note When *Auto allocation as is registered.* is selected in the General Tab Page, each time the connection path is set, a message will be displayed indicating that the current I/O allocations have been deleted because the connection has been changed. To set the connection path, deselect *Auto allocation as is registered.* before registering the Slaves.

2-3 Unit Functions

Function List

The following table lists the DeviceNet Communications Unit's functions.

Function name	Summary	Setting/monitoring method
Table registration	Reads the configuration of the Slice I/O Units connected to the Communications Unit and registers that information in a table.	Set with DIP switch.
Backup	Records the parameter data of all connected I/O Units in the Communications Unit.	Set with DIP switch.
Automatic restore	Automatically downloads the backed-up parameter data to the appropriate Unit.	Set with DIP switch.
Online replacement	I/O Units can be replaced without turning the power OFF.	No setting required.
Automatic baud rate recognition	The Master's communications baud rate is automatically detected and adopted.	No setting required.
Network power supply voltage monitor	The DeviceNet network's power supply voltage values are recorded in the DeviceNet Communications Unit.	Set/read with Configurator or explicit message.
Unit power ON time monitor	Records the total time that the DeviceNet Communications Unit's internal circuit power has been ON.	Set/read with Configurator or explicit message.
Unit comment	A user-set name can be assigned to the Communications Unit.	Set/read with Configurator or explicit message.
Network communications error history	A communications error history from the viewpoint of the Communications Unit can be collected in the Communications Unit.	Set/read with Configurator or explicit message.

Function name	Summary	Setting/monitoring method
I/O communications error history	A history of communications errors with connected I/O Units can be collected in the Communications Unit.	Set/read with Configurator or explicit message.
Last maintenance date	The date on which maintenance was performed can be written to the Communications Unit.	Set/read with Configurator or explicit message.

2-3-1 Table Registration Function

Function Overview

This function registers the configuration of the Slice I/O Units connected to the DeviceNet Communications Unit in a table within the Unit, so that the registered I/O table can be automatically compared with the actual configuration each time that the power is turned ON. The configuration is registered simply by turning ON (OFF to ON) pin 1 of the DeviceNet Communications Unit's DIP switch while the Slice I/O Terminal's power supply is ON. The registered table is enabled if pin 1 is ON when the power is turned ON. If pin 1 is OFF when the power is turned ON, the registered table is disabled and the Communications Unit will automatically detect the actual I/O configuration and start communications.

Creating a New Registration Table

The Slice I/O Terminal's present I/O configuration can be read and registered in the table just by turning DIP switch pin 1 (REGS) from OFF to ON while the DeviceNet Communications Unit's power supply is ON. If the registration table is being refreshed, the old registration table will be erased.

Figure 1

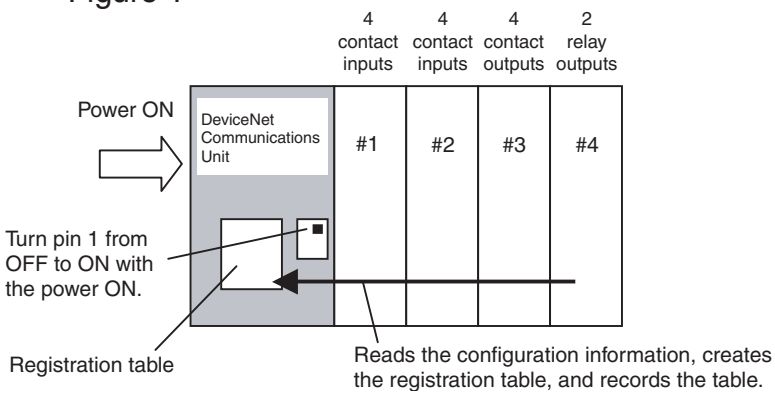

Note The configuration information shows the order that the Slice I/O Units are connected and the I/O size (input or output, number of bits) of each Slice I/O Unit. The I/O Unit model numbers are not recorded.

Comparison with the Registered Table

When DIP switch pin 1 (REGS) is ON and an I/O configuration table has been registered in the Communications Unit, the actual I/O configuration is automatically compared to the registered table when the power is turned ON. A verification error will occur if a registered I/O Unit cannot join I/O communications or an unregistered I/O Unit is detected.

If there are verification errors, the affected Slice I/O Units will not join in I/O communications. I/O communications will start with the other Slice I/O Units.

■ **Example of Comparison between Figure 1 and Figure 2**

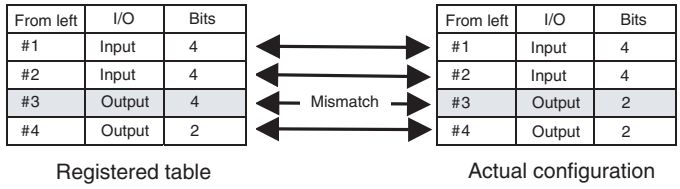

Figure 2

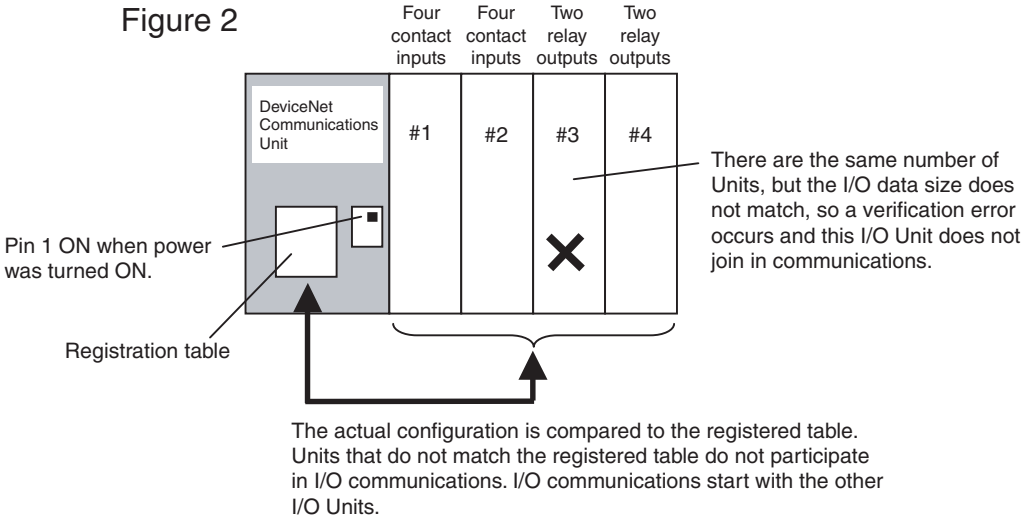

Note

(1) Register the I/O configuration table when all of the Slice I/O Units are communicating, i.e., when the DeviceNet Communications Unit's TS indicator is lit green.

(2) A mismatch (verification error) with the registered table is indicated at the DeviceNet Communications Unit's TS indicator (flashing red) and can be read from the Configurator. The error details can be read from the Configurator or the error history can be read with an explicit message command.

2-3-2 Backup Function

Function Overview

The backup function records the parameter data of all Slice I/O Units connected to the DeviceNet Communications Unit. The parameter data recorded in the Communications Unit can be restored to the Slice I/O Units later with the automatic restore function when a Slice I/O Unit has been replaced.

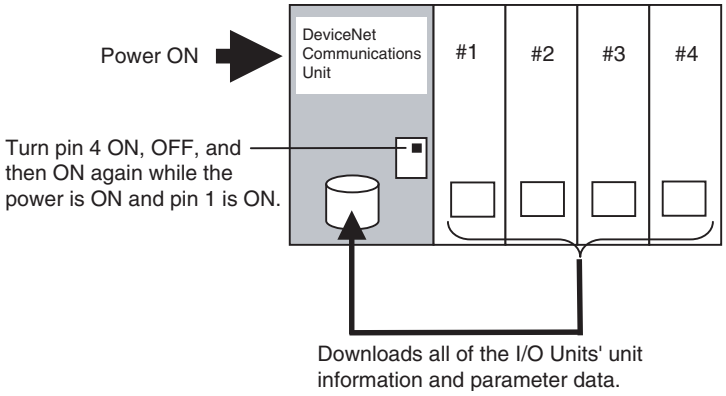

Backup Procedure

1,2,3...

1. Verify that the power is ON, DIP switch pin 1 (REGS) is ON, and all of the Slice I/O Units are participating in I/O communications.
2. Turn DIP switch pin 4 (BACK) ON, then OFF, and then ON again within 3 s to start the back up.
3. While the data is being backed up, the DeviceNet Communications Unit's TS indicator will flash green every 0.5 s. The TS indicator will stop flashing (not lit) when the backup is completed. If the restore operation fails, the TS indicator will be lit red for 2 s.

Note

(1) Do not turn OFF the power supply or reset the Configurator while data is being backed up. The data will not be backed up properly if the power is turned OFF.

(2) The backup data will be erased along with the registered I/O configuration table if the power supply is turned ON or the Slave is reset while DIP switch pin 1 (REGS) is turned OFF.

(3) We recommend backing up the parameter data in case a Unit fails in the future.

2-3-3 Automatic Restore Function

Function Overview

When a Slice I/O Unit has been replaced, this function will automatically download (restore) Slice I/O Unit parameter data that was previously backed up in the DeviceNet Communications Unit. The following conditions are required to execute the automatic restore function:

- DIP switch pin 1 (REGS) was ON when the power was turned ON, so the registered table is enabled.
- DIP switch pin 3 (ADR) was ON when the power was turned ON, so the automatic restore function is enabled.
- Parameter data has been backed up in the DeviceNet Communications Unit.

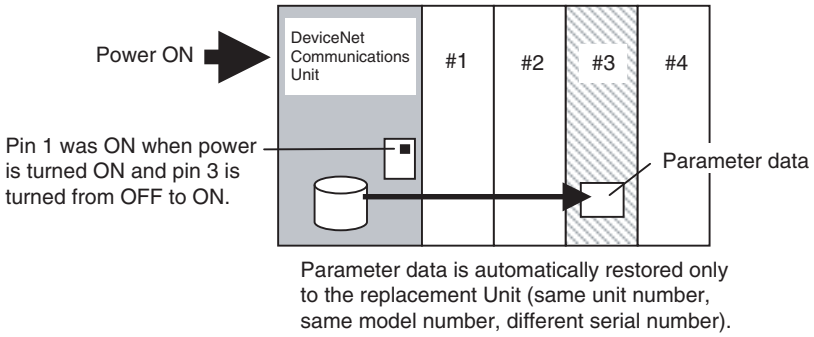

Preparation for Data Restoration

1,2,3...

1. Create backup data in the Communications Unit with the backup function. For details, see *2-3-2 Backup Function*.
2. Turn ON DIP switch pin 3 (ADR).

Unit Replacement Procedure

1,2,3...

1. Turn OFF the Slice I/O Terminal's power supply and the I/O power supply.
2. Release the hook on the front of the I/O Unit that you want to replace and remove the terminal block. The wiring can remain connected.
3. Remove the main block of the Slice I/O Unit and replace it with a new I/O Unit.
4. Mount the terminal block that was removed in step 2 and latch the hook that was released.
5. When the power is turned ON again, the Communications Unit will automatically detect the Unit that was replaced and download the backup data. The I/O Unit's TS indicator will indicate the results of the restore operation.
   - If the download was successful, the Unit will be reset automatically and join I/O communications normally. The I/O Unit's TS indicator will be lit green.
   - If the download failed, the I/O Unit's TS indicator will be flash red.
   - If the connected Unit is the wrong model, the I/O Unit's TS indicator will be lit red.

Note

(1) Do not turn OFF the power supply or reset the Configurator while data is being restored. The data will not be restored up properly if the power is turned OFF.

(2) When an I/O Unit has been replaced with the power ON and the new I/O Unit joins I/O communications, the new Unit will be compared to the previous one and the parameter data restore operation will start automatically. While data is being restored, the DeviceNet Communications Unit's TS indicator will flash green every 0.5 s. The TS indicator will stop flashing (not lit) when the restore operation is completed. If the restore operation fails, the Automatic Restore Monitor Flag (bit 13 of the Communications Unit status flags) will be turned ON and the Communications Unit's TS indicator will be lit red for 2 s.

2-3-4 Online Replacement Function

Function Overview

When one of the Slice I/O Units connected to the DeviceNet Communications Unit must be replaced, the Unit can be replaced without turning OFF the power. The Units can be replaced online because the Slice I/O Units are made up of 3 blocks: the base block, main block, and terminal block. When replacing a Slice I/O Unit, leave just the base block connected and replace the main block. I/O communications will continue with the other I/O Units even while the problem Unit is being removed and replaced.

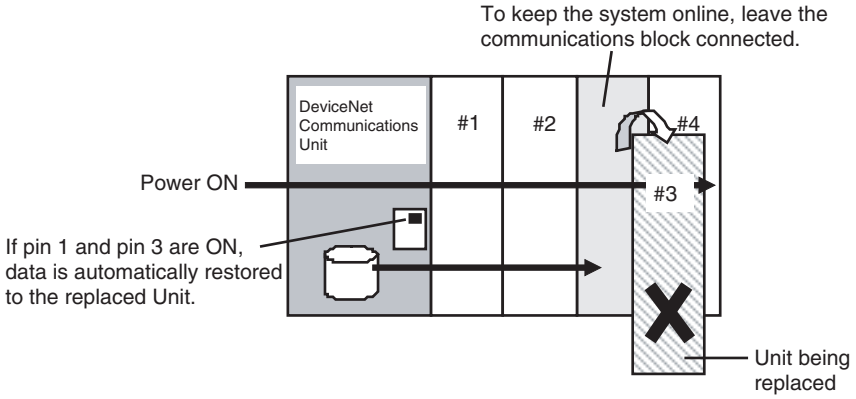

Replacement Procedure

1,2,3...

1. Turn OFF the I/O power supply of the I/O Unit being replaced.
2. Release the hook on the front of the I/O Unit that you want to replace and remove the terminal block. The wiring can remain connected.
3. Remove the main block of the Slice I/O Unit and replace it with a new I/O Unit.
4. Mount the terminal block that was removed in step 2 and latch the hook that was released.
5. Turn ON the I/O power supply.

Note

(1) When a Unit withdraws from I/O communications during replacement, the corresponding Slice I/O Unit Communications Withdrawn Flag will go ON and the DeviceNet Communications Unit's TS indicator will flash red.

(2) Before using the automatic restore function, the preparation for automatic restoration (creating backup data and turning ON DIP switch pin 3) must be completed. See *2-3-3 Automatic Restore Function* for details.

(3) Always turn OFF the I/O Unit's I/O power supply before replacement in order to prevent false output signals, false input signals, and electrical shocks. In addition, if external power is supplied to the terminal block for a Unit such as a Relay Output Unit, turn OFF that power supply before replacing the Unit.

(4) Only replace one I/O Unit at a time.

(5) Always replace the I/O Unit with the same model of I/O Unit. If a Unit is replaced with a different model, there may be unexpected outputs and the restore operation may not be completed properly.

(6) If the base block is faulty or damaged, turn OFF the power supply and replace the entire Unit. Even in this case, the I/O Unit's parameter data will be restored automatically if the automatic restore function is enabled when the power is turned ON.

2-3-5 Automatic Baud Rate Recognition

The DeviceNet Communications Unit's baud rate is automatically adjusted to match the Master's baud rate. The Communications baud rate is set and saved after the power is turned ON and communications with the Master are established. The baud rate setting is retained until the next time that the power is turned ON.

Note If the Master's baud rate has been changed, the DeviceNet Communications Unit must be turned OFF and then ON again to change its baud rate.

2-3-6 Network Power Supply Voltage Monitor

Function Overview

The present, bottom, and peak values of the Network power voltage can be recorded in the DeviceNet Communications Unit. A monitor voltage level can be set with the Configurator and recorded in the DeviceNet Communications Unit. The Network Power Voltage Error Flag in the Status Area will be turned ON when the voltage drops below the set monitor value. The current, minimum, and maximum values of the Network power voltage, and the Network Power Voltage Error Flag can be read from the Configurator.

Note

1. The communications power voltage of the actual DeviceNet is 11 V minimum, so if the communications power voltage drops below 11 V, the operation for reading the measurement values using the Configurator may not function properly.
2. The maximum and minimum Network power voltages are cleared when the Network power is turned OFF.

Setting Using the DeviceNet Configurator

The method used to set values from the DeviceNet Configurator (Ver. 2.43 or later) is described here.

1,2,3...

1. Turn ON the DeviceNet Communications Unit's power supply.
2. From the Main Window, open the Network Configuration Window and double-click or click the right mouse button over the icon of the DeviceNet Communications Unit to be set. Select ***Parameter*** and ***Edit*** to display the Edit Device Parameters Window.
   From the Maintenance Mode Window, click the right mouse button over the icon of the DeviceNet Communications Unit to be set. Select ***Parameter*** and ***Edit*** to display the Edit Device Parameters Window.

3. Select the **General** Tab.

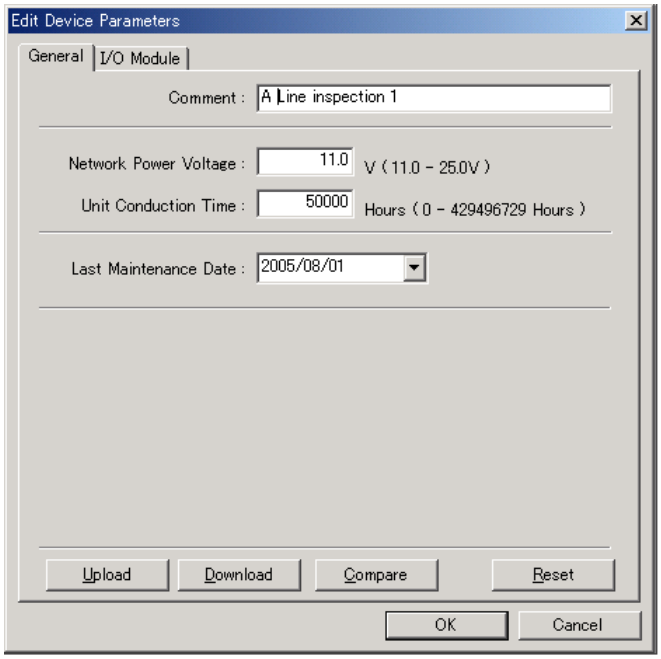

4. Enter the desired value in the *Network Power Voltage* field. (The default value is 11 V.)
5. Click the **Download** Button, and then click the **Reset** Button to reset the Unit.
6. Click the **OK** Button.

2-3-7 Unit Conduction Time Monitor

Function Overview

The total ON time (unit: 0.1 h) of the DeviceNet Communications Unit's internal circuit power can be calculated and recorded.

The monitor value can be maintained in the DeviceNet Communications Unit and the Unit Maintenance Flag in the Status Area will be turned ON when the total time reaches the set monitor value. The total ON time can be read using the Configurator or explicit messages.)

- Measured time: 0 to 429496729 hours (stored data: 00000000 to FFFFFFFF Hex)
- Measuring unit: 0.1 hr

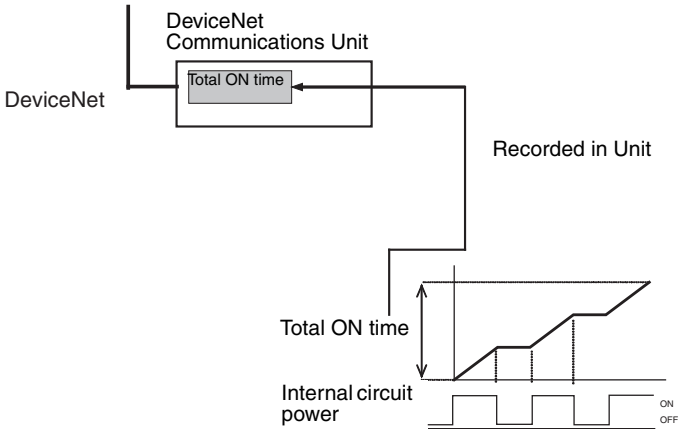

Note

1. The Unit conduction time monitor (Power ON time monitor) calculates the total time that the Smart Slave's Network power supply is ON. The total time is not calculated when the power is OFF.
2. When the power ON time of the DeviceNet communications unit reaches 87672 hours (10 years), saving of the power ON time in non-volatile memory in the unit stops.
3. After the power ON time reaches 87672 hours (10 years), the power On time count continues while the power is ON, but when the power is turned OFF and then ON, the count resumes from 87671.

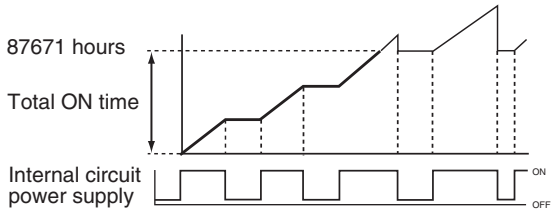

Setting Using the DeviceNet Configurator

The method used to set values from the DeviceNet Configurator (Ver. 2.43 or later) is described here.

1,2,3...

1. Turn ON the DeviceNet Communications Unit's power supply.
2. From the Main Window, open the Network Configuration Window and double-click or click the right mouse button over the icon of the DeviceNet Communications Unit to be set. Select ***Parameter*** and ***Edit*** to display the Edit Device Parameters Window.
   From the Maintenance Mode Window, click the right mouse button over the icon of the DeviceNet Communications Unit to be set. Select ***Parameter*** and ***Edit*** to display the Edit Device Parameters Window.
3. Select the **General** Tab.

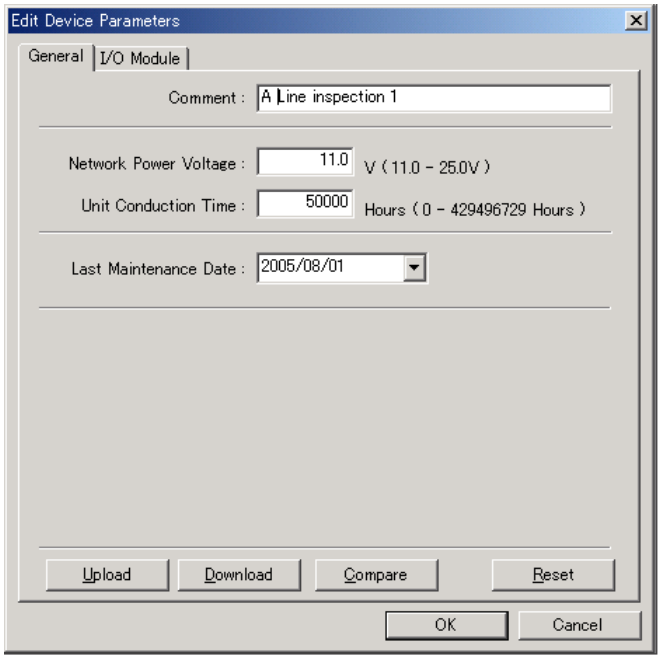

4. Enter the desired value in the *Unit Conduction Time* field.
5. Click the **Download** Button, and then click the **Reset** Button to reset the Unit.
6. Click the **OK** Button.

2-3-8 Unit Comments

Function Overview

The user can assign and record a name or comment for every Unit (up to 32 characters). The Configurator or explicit messages can be used to read and write these Unit names (comments).

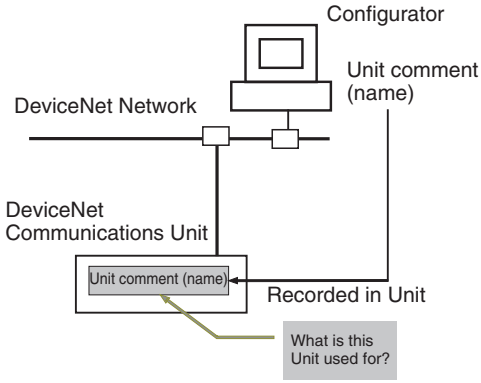

Setting Using the DeviceNet Configurator

The method used to set values from the DeviceNet Configurator (Ver. 2.43 or later) is described here.

Either of the following two settings methods can be used.

Setting Method 1

1,2,3...

1. Turn ON the DeviceNet Communications Unit's power supply.
2. From the Main Window, open the Network Configuration Window and double-click or click the right mouse button over the icon of the DeviceNet Communications Unit to be set. Select ***Parameter*** and ***Edit*** to display the Edit Device Parameters Window.
   From the Maintenance Mode Window, click the right mouse button over the icon of the DeviceNet Communications Unit to be set. Select ***Parameter*** and ***Edit*** to display the Edit Device Parameters Window.
3. Select the **General** Tab.

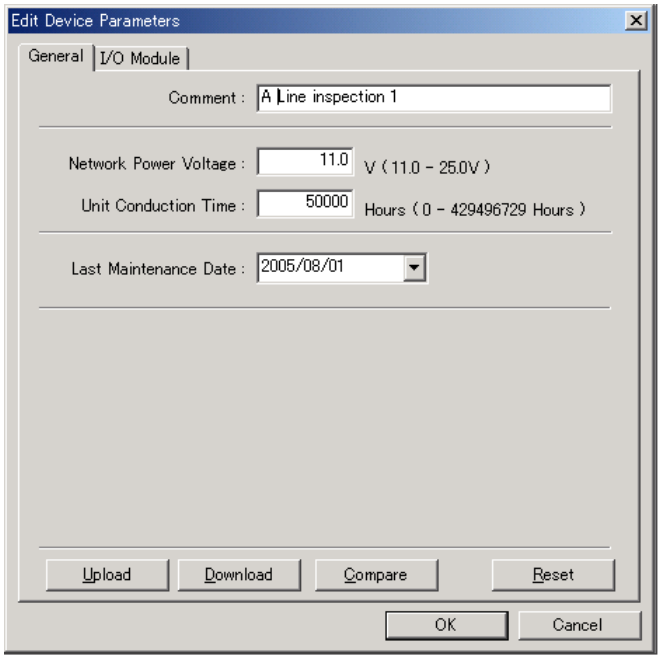

4. Enter the desired name in the *Comment* field.

5. Click the **Download** Button, and then click the **Reset** Button to reset the Unit.
6. Click the **OK** Button.

Setting Method 2

The procedure for this setting method is the same from both the Main Window and the Maintenance Mode Window.

1,2,3...

1. Turn ON the DeviceNet Communications Unit's power supply.
2. Click the right mouse button over the icon of the DeviceNet Communications Unit to be set in the Network Configuration Window, and select ***Change Device Comment***.

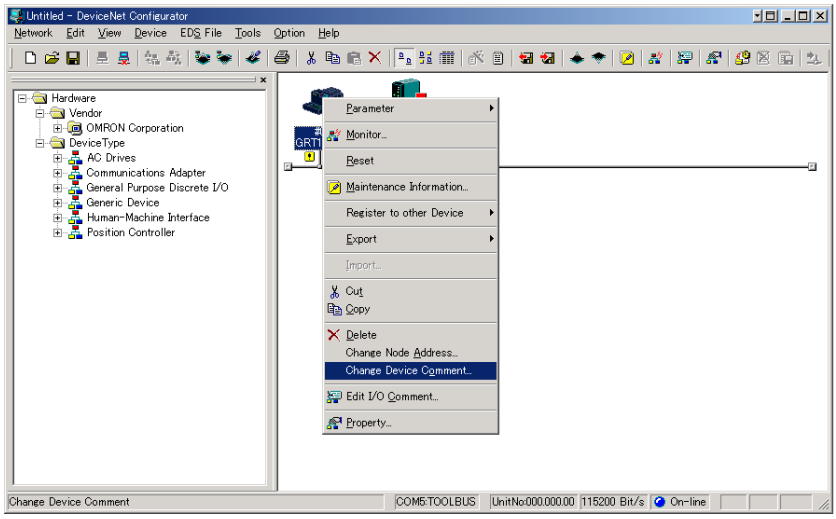

3. The following window will be displayed. Enter the desired name.

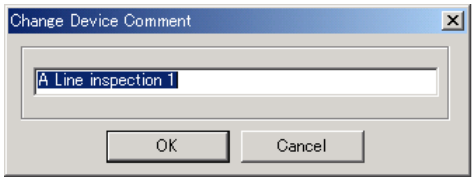

4. Click the **OK** Button.
5. Click the right mouse button over the icon of the DeviceNet Communications Unit to be set, and select ***Parameter*** and ***Download***.

2-3-9 Network Communications Error History Monitor

Function Overview

The error status information (communications error code, communications power voltage when the error occurred) for the last four communications errors that occurred between the DeviceNet Communications Unit and Master can be recorded in the DeviceNet Communications Unit.

(The Configurator or explicit message commands can be used to read the communications error history.)

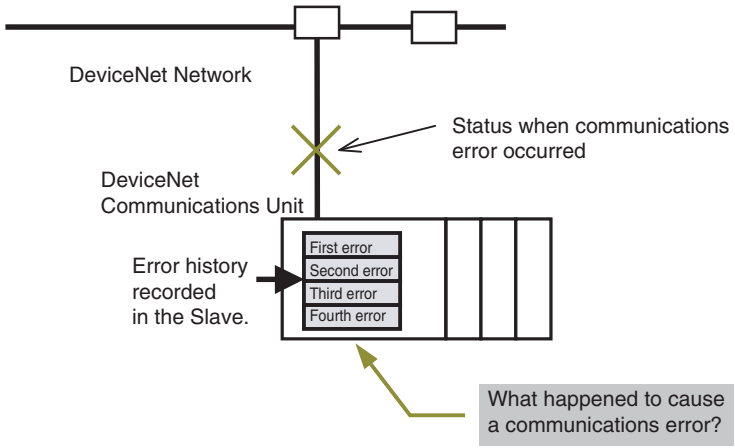

Checking Using the DeviceNet Configurator

The method used to check error information from the DeviceNet Configurator (Ver. 2.43 or later) is described here.

1,2,3...

1. Turn ON the DeviceNet Communications Unit's power supply.
2. Click the right mouse button over the icon of the DeviceNet Communications Unit to be set in the Network Configuration Window, and select ***Monitor***.

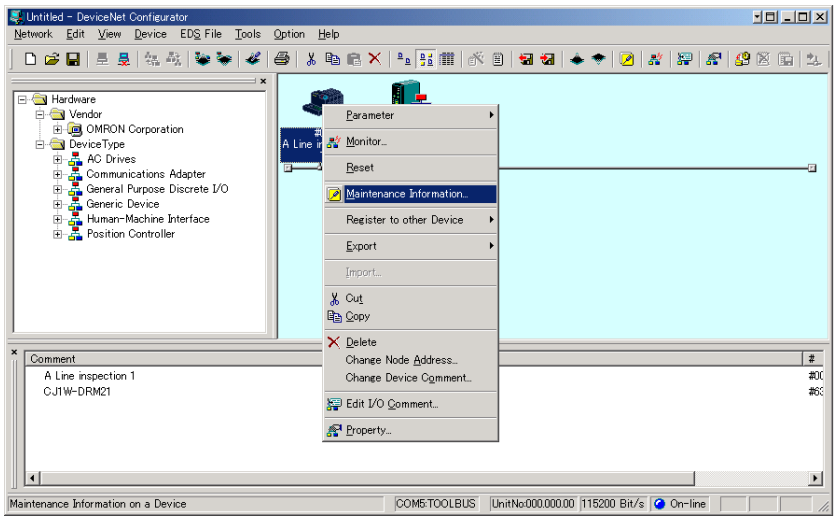

3. Select the **Error History** Tab in the Monitor Device Window. The communications error history for the last four errors that occurred will be displayed, as shown in the following window. To display the most recent error history, click the **Update** Button.

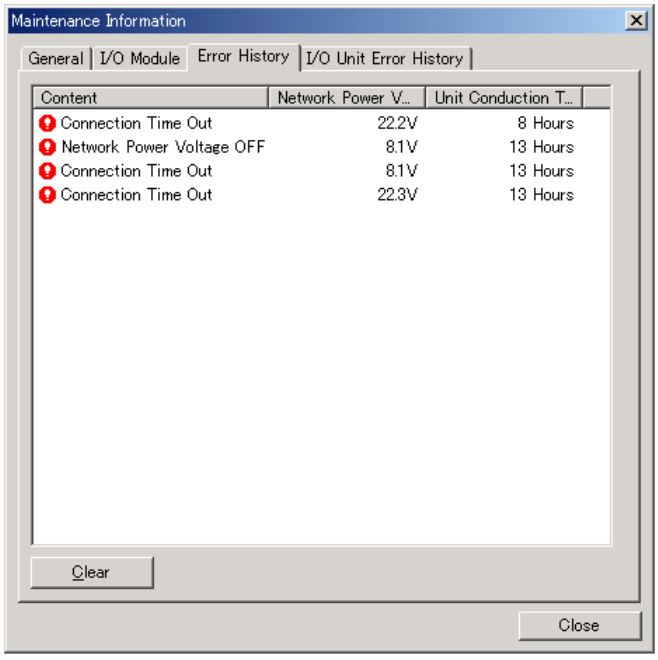

Note From the Maintenance Mode Window, double-click the Slave icon, and select the **Error History** Tab from the Maintenance Information Window.

2-3-10 I/O Communications Error History Monitor

Function Overview

The DeviceNet Communications Unit can record the 64 most recent Slice I/O Terminal communications errors and internal Communications Unit errors in the Unit's error history. When more than 64 errors occur, the oldest entry is deleted to make space for the newest error entry. The communications error history can be read from the Configurator or explicit message commands.

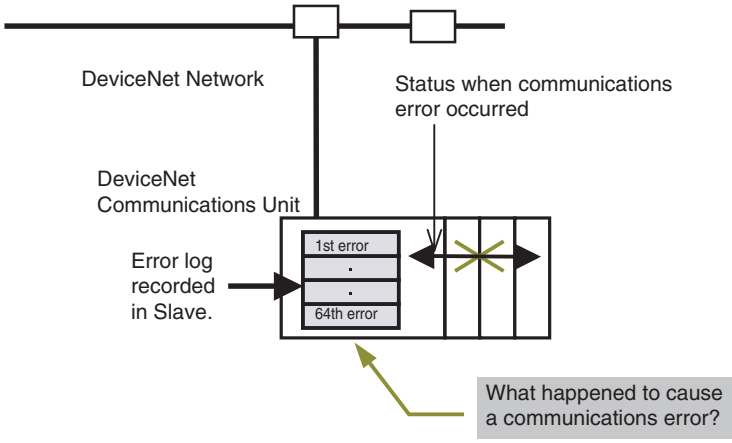

Checking Using the DeviceNet Configurator

The method used to check error information from the DeviceNet Configurator (Ver. 2.43 or later) is described here.

1,2,3...

1. Turn ON the DeviceNet Communications Unit's power supply.
2. Click the right mouse button over the icon of the DeviceNet Communications Unit to be set in the Network Configuration Window, and select ***Monitor***.

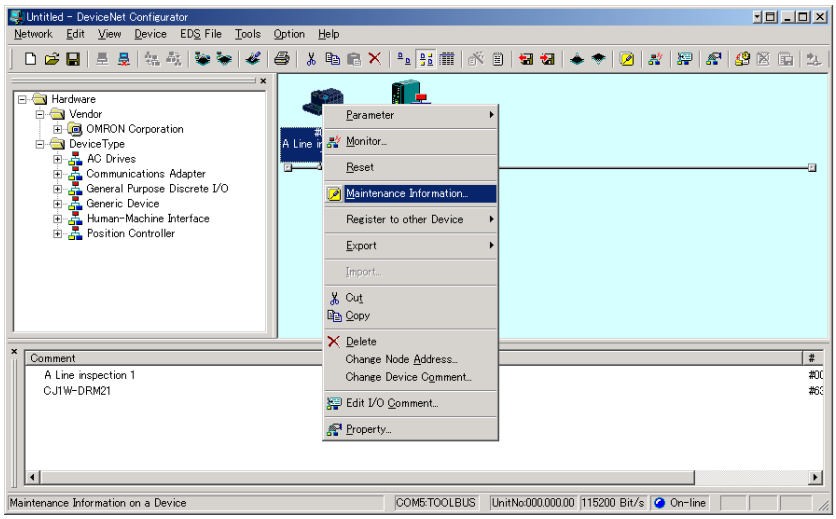

3. Select the **I/O Unit Error History** Tab in the Monitor Device Window. The communications error history for the most recent errors that occurred will be displayed, as shown in the following window. To display the most recent error history, click the **Update** Button.

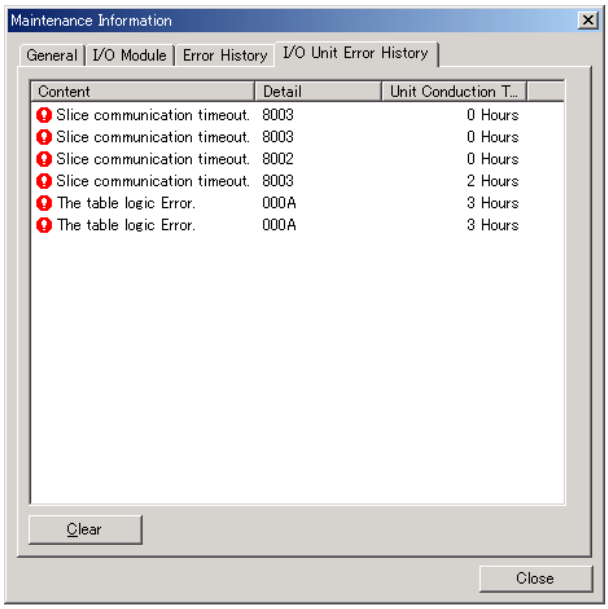

2-3-11 Last Maintenance Date

Function Overview

This function enables the date on which maintenance was last performed to be written to the Unit. This means that the timing for future maintenance can be judged more easily. The date can be written using the Configurator.

Setting Using the DeviceNet Configurator

1,2,3...

1. From the Main Window, double-click the icon of the DeviceNet Communications Unit to be set to display the Edit Device Parameters Window. (From the Maintenance Mode Window, click the right mouse button over the icon of the DeviceNet Communications Unit to be set and select ***Parameter*** and ***Edit*** to display the Edit Device Parameters Window.)
2. Click the **General** Tab, and select the desired date from the pull-down menu for the *Last Maintenance Date* field. (Click the **Today** Button to enter the current date.)

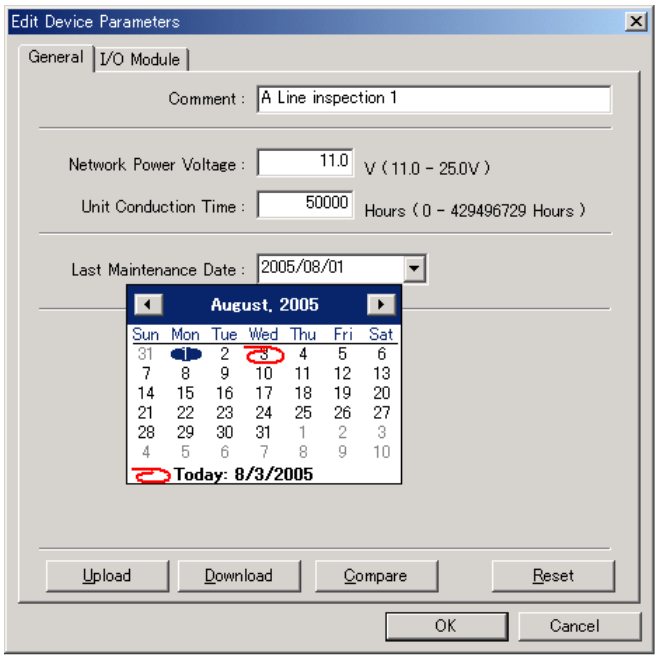

3. Click the **Download** Button, and then click the **Reset** Button to reset the Unit.
4. Click the **OK** Button.

SECTION 3
Installation and Wiring

This section provides information on installing and wiring a Slice I/O Terminal.

3-1 Installation 40
3-1-1 Connecting the DeviceNet Communications Unit and Slice I/O Unit 40
3-1-2 Connecting Additional Slice I/O Units 41
3-1-3 Installation on a DIN Track 42
3-2 Power Supply Wiring 44
3-2-1 Connecting the Slice I/O Terminal Power Supply 44
3-2-2 Wiring Methods 45
3-3 Wiring DeviceNet Communications Cables 47
3-3-1 Connecting Communications Cables 47
3-3-2 Connecting to the DeviceNet Communications Unit 50
3-4 Connecting the Turnback Cable 50
3-4-1 Connecting the Turnback Units 50

3-1 Installation

The Slice I/O Terminal is installed and set up as a DeviceNet Slave. The DeviceNet Communications Unit's communications connector connects to the Master Unit through a DeviceNet communications cable.

Up to 64 Slice I/O Units can be connected to one DeviceNet Communications Unit.

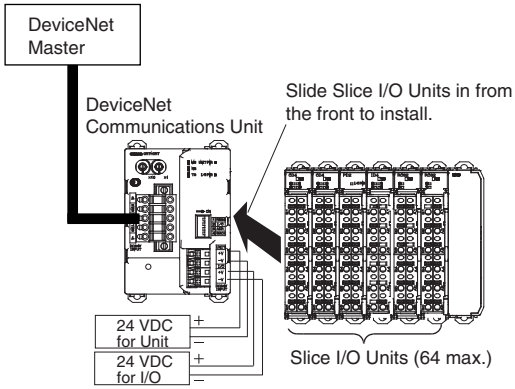

Note (1) Do not connect or disconnect the DeviceNet Communications Unit's communications cable while the DeviceNet network is operating. Short-circuits or poor contacts in the DeviceNet cable may prevent normal communications.

(2) Be sure that the power supplies for the DeviceNet Communications Unit, Slice I/O Units connected to the DeviceNet Communications Unit, and external I/O are wired correctly through the DeviceNet Communications Unit's terminal block.

3-1-1 Connecting the DeviceNet Communications Unit and Slice I/O Unit

Connect the first Slice I/O Unit to the DeviceNet Communications Unit by aligning the sides of the Units and sliding in the Slice I/O Unit from the front.

Additional Slice I/O Units can be connected consecutively to the first.

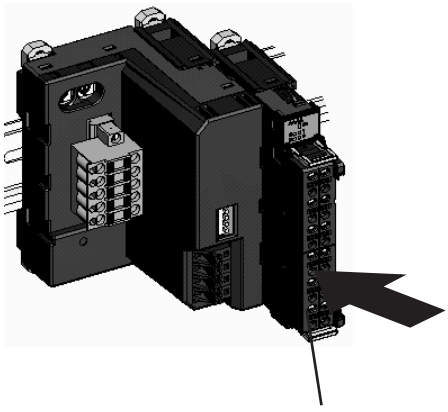

Slide the Slice I/O Unit toward the DIN Track from the front. Insert the Unit until you hear a click, which indicates that the Unit has locked on the Track. It is not normally necessary to release the DIN Track mounting hook when mounting the Unit.

Note Do not touch the connector on the Unit's base block.

3-1-2 Connecting Additional Slice I/O Units

Connect additional Slice I/O Units by aligning the sides of the Units and sliding in the next Unit from the front. Up to 64 Slice I/O Units can be connected to one DeviceNet Communications Unit.

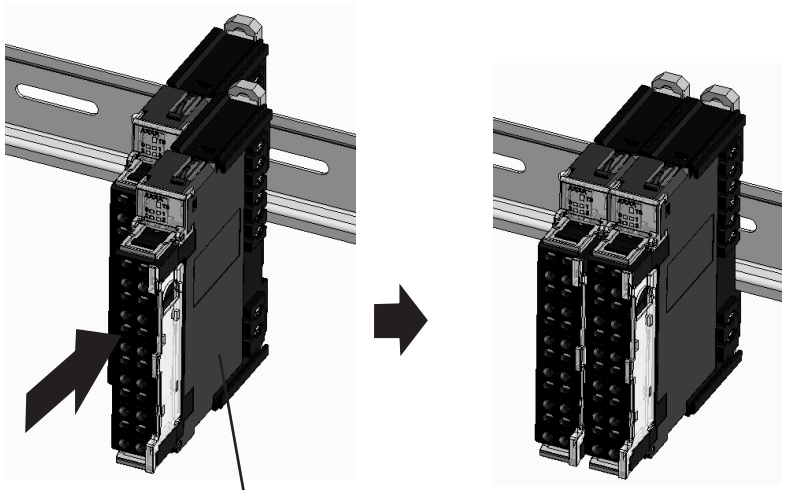

Slide the Unit to the DIN Track from the front.
Insert the Unit until you hear a click, which indicates that the Unit has locked on the Track.
It is not normally necessary to release the DIN Track mounting hook when mounting the Unit.

Connecting Turnback Units

When a Slice I/O Terminal is divided into blocks, connect a GRT1-TBR Right Turnback Unit to the right end of the first block. Connect a GRT1-TBL Left Turnback Unit to the left side of the expansion block and connect additional Slice I/O Units. Use a GCN2-100 Turnback Cable to connect the Turnback Units together.

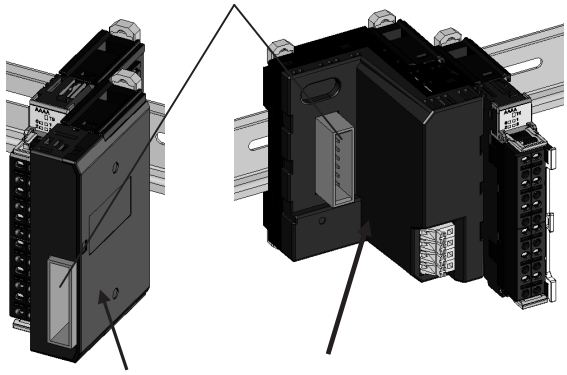

Note The Turnback Units can be used to divide a Slice I/O Terminal into up to three blocks.

Connecting the End Unit

A GRT1-END End Unit must be connected to the end of the Slice I/O Terminal.

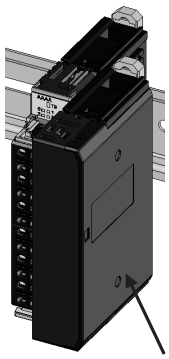

GRT1-END End Unit

3-1-3 Installation on a DIN Track

DIN Track Installation

Mount the DeviceNet Communications Unit and Slice I/O Units on a DIN Track. Attach the DIN Track with screws in every fourth mounting hole.

PFP-50N (50 cm) or PFP-100N (100 cm) DIN Track

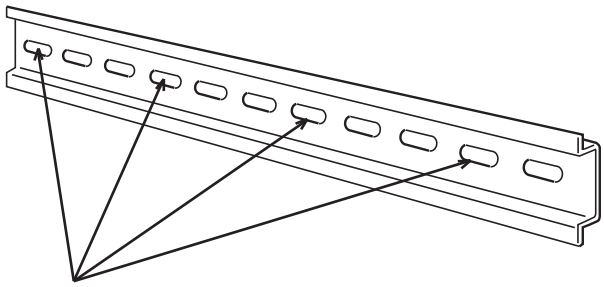

Attach the track with screws at a maximum spacing of 105 mm between adjacent screws.

PFP-M End Plate (Two Required)

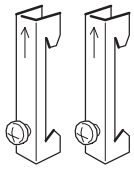

Slice I/O Terminal Orientation

There is no particular restriction on the Slice I/O Terminal's orientation. The Terminal can be mounted in any of the following 6 directions.

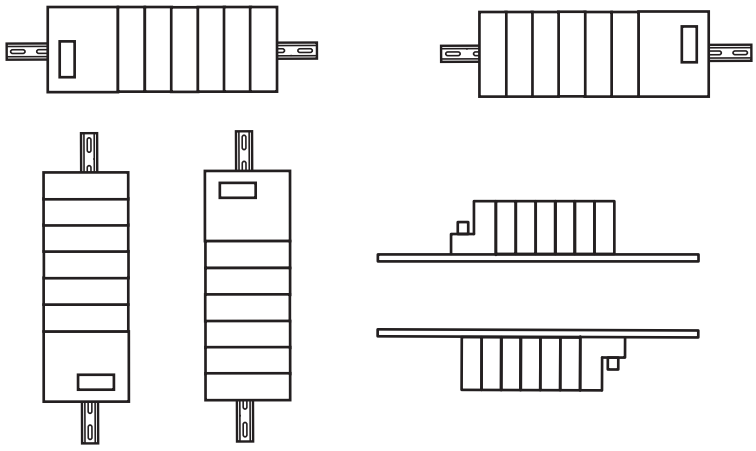

Installing a Unit

Press the Units onto the DIN Track firmly from the front. Press the Unit firmly until it clicks, indicating that the Unit's DIN Track Mounting Hook has locked onto the DIN Track.

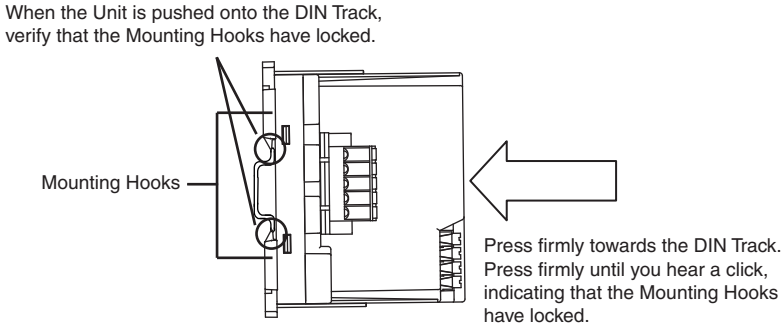

Removing a Unit

Use a standard screwdriver to release the DIN Track Mounting Hooks at the top and bottom of the Unit and pull the Unit straight away from the DIN Track.

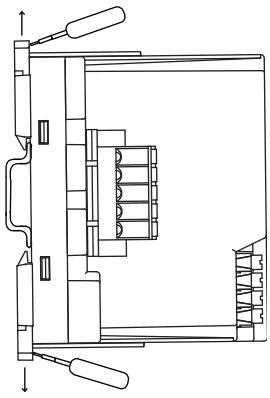

Installing the End Plates

Always secure the Slice I/O Terminal on the DIN Track by installing End Plates on both sides of the Terminal. First hook the bottom of the End Plate on the bottom edge of the DIN Track (1), attach the top of the End Plate, and pull the End Plate down onto the top edge of the DIN Track (2).

Tighten the End Plate's securing screw.

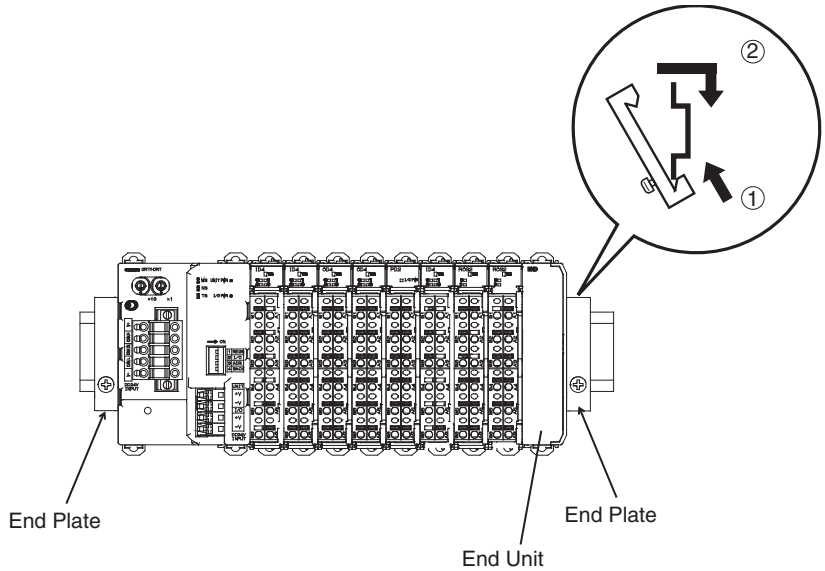

Note Always secure the Slice I/O Terminal by attaching End Plates on both ends.

3-2 Power Supply Wiring

Both the Slice I/O Terminal power supply and the external I/O power supply are connected with screwless clamping-type terminals on the DeviceNet Communications Unit.

3-2-1 Connecting the Slice I/O Terminal Power Supply

The DeviceNet Communications Unit has two sets of power supply terminals for the following two systems.

Power supply terminals	Description
Unit power supply terminals	These terminals supply power to the DeviceNet Communications Unit's internal circuits as well as the connected Slice I/O Units' internal circuits (supplied through the Slice bus).
I/O power supply terminals	These terminals supply power to the external I/O that is connected to the Terminal's Slice I/O Units.

Evaluating the Power Supply Requirements

Unit Power Supply

The maximum power consumption for a Slice I/O Terminal is 80 W per block.

1,2,3...

1. Calculate the power consumption of all of the Slice I/O Units connected to the DeviceNet Communications Unit.
2. If the power consumption exceeds 80 W, mount a Right Turnback Unit (GRT1-TBR) on the Slice I/O Unit at the point where the power consumption is less than 80 W.
3. Connect the 24 VDC Unit power supply to the Left Turnback Unit (GRT1-TBL).

Power Consumption of Slice I/O Units

Refer to *Appendix E I/O Current Consumption* for the power consumption of the various Slice I/O Units and Turnback Units.

Note When dividing the power supply, always wire (supply) the power from the same power supply. (Refer to the following wiring example.)

I/O Power Supply

The maximum I/O current consumption is 4 A.

1,2,3...

1. Calculate the total current consumption used by all external I/O of the connected Slice I/O Units (including other Units such as Turnback Units).
2. If the current consumption exceeds 4 A or you want to provide separate systems for inputs and outputs, divide the Slice I/O Units at the desired point with a GRT1-PD2 I/O Power Supply Unit and provide a separate external I/O power supply.
3. It is also possible to provide a separate external I/O power supply at a Left Turnback Unit (GRT1-TBL).

Current Consumption for Slice I/O Unit I/O

Refer to *Appendix D Power Consumption Tables* for the I/O current consumption of the various Slice I/O Units and Turnback Units.

Note

(1) Always use isolated power supplies for the power supplies.

(2) Power is not supplied through the GCN2-100 Turnback Cable. (Refer to the following wiring example.)

Wiring Example

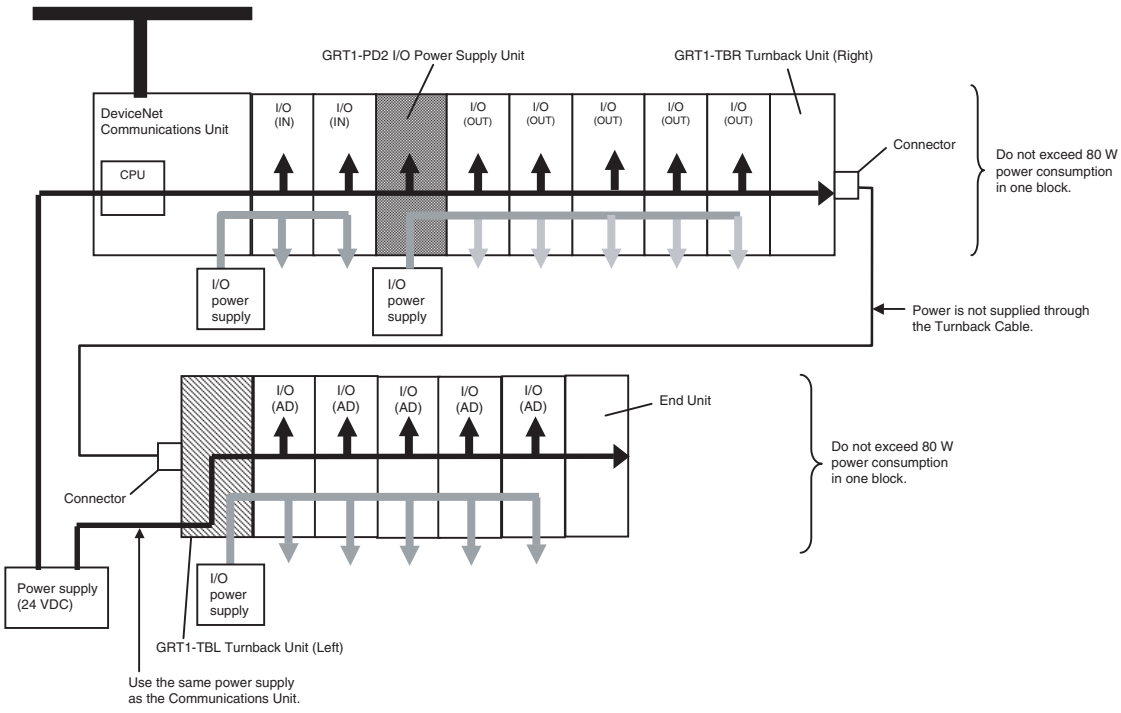

3-2-2 Wiring Methods

Supplying Power to the Units

Connect the power supply wires (24 VDC) to the DeviceNet Communications Unit's screwless clamping power supply terminals. If pin terminals are used on the wire ends, the pin terminals can just be inserted to wire the power.

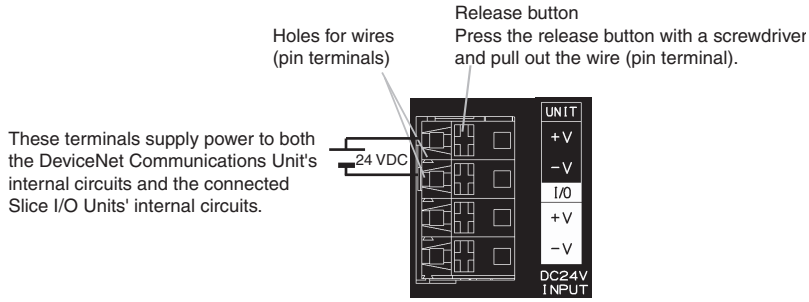

Note The GRT1-TBL Left Turnback Unit has the same screwless clamping power supply terminals. Those terminals are wired in the same way as the DeviceNet Communications Unit's terminals, just by inserting the power supply wires.

Supplying I/O Power

The power supply for I/O devices is supplied through the DeviceNet Communications Unit's screwless clamping power supply terminals. If pin terminals are used on the wire ends, the pin terminals can just be inserted to wire the power.

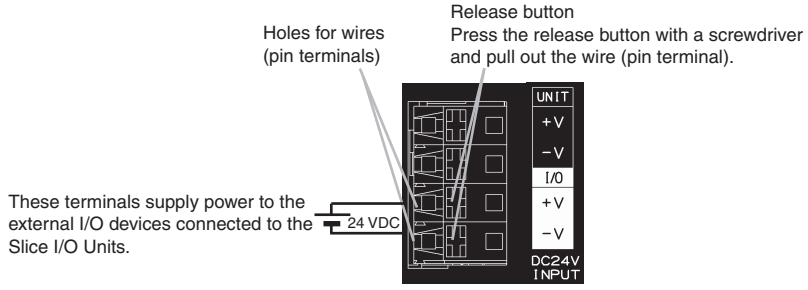

Note The GRT1-TBL Left Turnback Unit and GRT1-PD2 I/O Power Supply Unit have the same screwless clamping power supply terminals. Those terminals are wired in the same way as the DeviceNet Communications Unit's terminals, just by inserting the power supply wires.

Removing Wires

Press the release button above the terminal hole with a slotted precision screwdriver and pull out the wire.

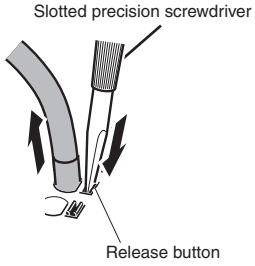

Use the following screwdriver or an equivalent to remove the wires.

Recommended Screwdriver

Model	Maker
SZF1	Phoenix Contact

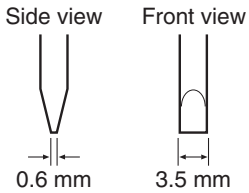

Recommended Power Supplies

Use a SELV power supply with overcurrent protection.

A SELV power supply has redundant or increased insulation between the I/O, an output voltage of 30 Vr.m.s and a 42.4-V peak or maximum of 60 VDC.

Recommended power supply: S82K-10024 (OMRON) or S8J-10024D (OMRON)

Recommended Wire

Type	Gauge
Stranded wire	20 AWG to 16 AWG (0.5 to 1.25 mm^2)
Solid wire	
Pin terminal	

Strip Length

Strip between 7 and 10 mm of insulation at the ends of the wires (stranded or solid wire).

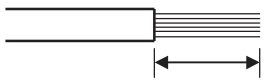

Strip 7 to 10 mm.

Pin Terminal Length

Use pin terminals with a pin (conductor) length of 8 to 10 mm.

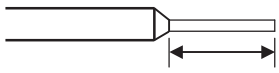

Pin length: 8 to 10 mm

3-3 Wiring DeviceNet Communications Cables

This section explains how to prepare the DeviceNet communications cables that connect to the DeviceNet Communications Unit and how to attach communications connectors.

For details on supplying the DeviceNet communications power and grounding the DeviceNet Network, refer to the *DeviceNet Operation Manual (W267)*.

3-3-1 Connecting Communications Cables

Use the following procedure to prepare the communications cables and connect them to the connectors.

The same methods are used to connect the cables to connectors with and without set screws.

1,2,3...

1. Remove about 30 to 80 mm of the cable covering, being careful not to damage the mesh shield underneath. Do not remove more than necessary. Removing excessive cable covering may cause a short-circuit.

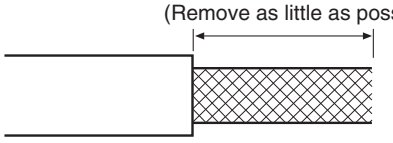

2. Peel back the mesh shield carefully to expose the signal lines, power lines, and the shielding wire. The shielding wire will be loose on the outside of the other lines, but it is harder than the mesh shield and should be easily identified.

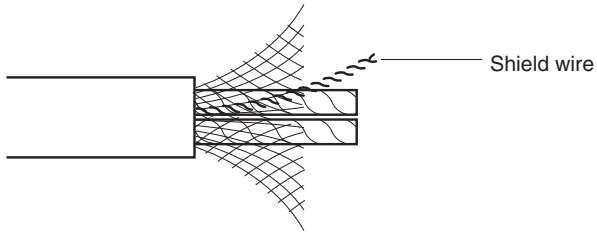

3. Remove the exposed mesh shield, remove the aluminum tape from the signal and power lines, and strip the covering from the signal and power lines to the proper length for the crimp terminal connectors. Twist together the wires of each of the signal and power lines.

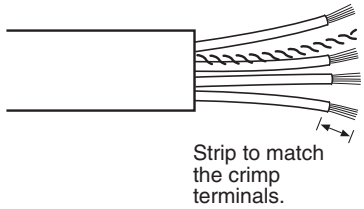

4. Attach the crimp terminals to the lines and then cover any exposed areas of the cable and lines with electrician's tape or heat-shrinking tubes.
Orient the connector properly, loosen the line set screws, and then insert the lines in order: Red, white, shield, blue, and then black.
The DeviceNet Communications Unit is equipped with screwless clamping terminals. It is not necessary to secure the lines with screws as with previous connectors. Push up the orange tab and then insert each line into the back of each hole.
Release the orange lever after inserting the lines, and gently pull each line to check that it is securely connected to the connector.

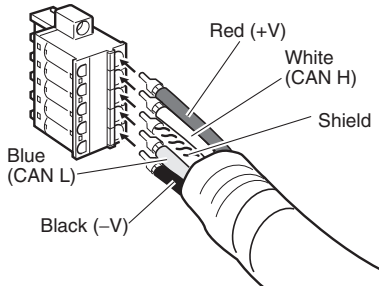

There are colored stickers provided on the Master Unit and Slaves that match the colors of the lines to be inserted. Check that the colors of the lines and stickers match when wiring the connectors.

The colors used are as follows:

Color	Signal
Red	Power line, positive voltage (+V)
White	Communications line, high (CAN H)
-	Shield
Blue	Communications line, low (CAN L)
Black	Power line, negative voltage (–V)

The following connector is included with the Unit.

Model	Specifications	Remarks
XW4G-05C4-TF-D	Multi-branch Parallel Clamp Connector with Screws	Provided with Unit.

Note GRT1-DRT Connector Compatibility
The following table classifies connectors in terms of compatibility with the GRT1-DRT. Before using any connectors other than those shown here, check for incompatibility related to structure or cables.

- Compatible Connectors

Model	Specifications	Remarks
XW4B-05C1-H1-D	Parallel Connector with Screws For node and T-branch tap connection. Connector screws provided.	---
XW4B-05C1-VIR-D	Orthogonal Connector with Screws For node and T-branch tap connection. Connector screws provided.	The cable comes out of the left side when viewed from the front of the Unit.
XW4G-05C1-H1-D	Parallel Clamp Connector with Screws For node and T-branch tap connection. Connector screws provided.	---
XW4G-05C4-TF-D	Multi-branch Parallel Clamp Connector with Screws For multi-drop node connection. Connector screws provided.	Provided with Unit.

- Incompatible Connectors

Model	Specifications	Remarks
XW4B-05C4-TF-D	Multi-branch Parallel Connector with Screws	---
XW4B-05C4-T-D	Multi-branch Parallel Connector without Screws	

- The following crimp terminals are recommended.
  Phoenix Contact AI Series and A1 Series

Connector type / Cable type		XW4B-05C1-H1-D XW4B-05C1-V1R-D	XW4G-05C1-H1-D XW4G-05C4-TF-D	Crimp tool
Thin Cable	Signal line	AI 0.25-6YE	AI 0.25-8YE	CRIMPFOX ZA3 or CRIMPFOX UD6
	Power line	AI 0.5-6WH	AI 0.5-10WH	
Thick Cable	Signal line	A1-6	A1-10	
	Power line	AI 2.5-8BU	AI 2.5-10BU	

3-3-2 Connecting to the DeviceNet Communications Unit

Align the DeviceNet Communications Unit connector with the cable connector, and insert the cable connector fully into the DeviceNet Communications Unit connector.

Always tighten the connector's screws to a torque between 0.25 and 0.3 N-m to secure the connector.

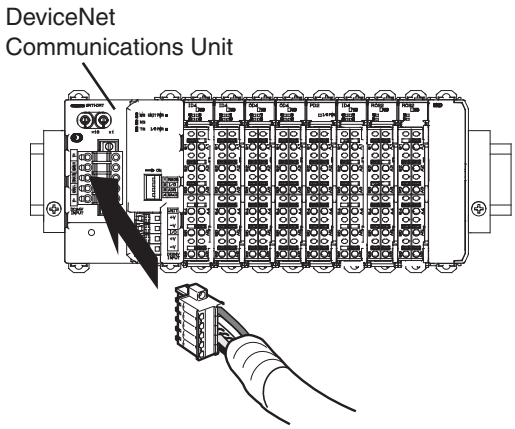

3-4 Connecting the Turnback Cable

When a Slice I/O Terminal is divided into blocks to expand the system, connect a GRT1-TBR Right Turnback Unit to the GRT1-TBL Left Turnback Unit with a GCN2-100 Turnback Cable.

Note Power is not supplied through the GCN2-100 Turnback Cable. Always wire (supply) the power to the GRT1-TBL Left Turnback Unit from the same power supply that supplies the DeviceNet Communications Unit.

3-4-1 Connecting the Turnback Units

Connect the Turnback Units with a Turnback Cable, as shown in the following diagram. A single DeviceNet Communications Unit can be expanded with up to two additional blocks, connected with two sets of Turnback Units.

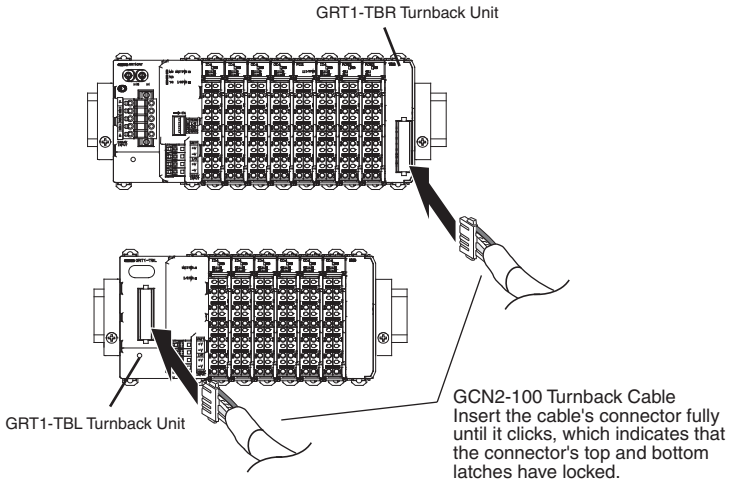

SECTION 4
Setup and Operating Procedures

This section outlines the basic procedures for setting up and operating the DeviceNet Communications Unit.

4-1 Basic Operating Procedure and Example Configuration 52
4-1-1 Basic Operating Procedure 52
4-1-2 Example System Configuration 53
4-2 Preparation for Operation 53
4-2-1 Determining the Slice I/O Terminal's I/O Specifications 53
4-2-2 Selecting the Slice I/O Units. 53
4-2-3 Confirming Specifications 53
4-2-4 Determining the DeviceNet Network Wiring Method 54
4-2-5 Determining the Communications Power Supply Method 54
4-3 Setting and Wiring Hardware 55
4-3-1 Mounting and Setting the Master Unit 55
4-3-2 Mounting and Setting the Slice I/O Terminal. 55
4-3-3 Connecting Cables 57
4-4 Starting Communications 57
4-4-1 Creating I/O Tables for the Master Unit 57
4-4-2 Starting the System 58
4-4-3 Creating and Registering Scan Lists 58
4-5 Checking Operation 60
4-5-1 Indicator Status 60
4-5-2 Checking I/O Communications 60

4-1 Basic Operating Procedure and Example Configuration

This section outlines the basic procedure for using a Slice I/O Terminal in a DeviceNet network and describes the basic configuration.

4-1-1 Basic Operating Procedure

The following lists outline the basic operating procedures. Refer to the reference pages provided for details on each step and refer to the DeviceNet master operation manual or *GRT1 Series Slice I/O Units Operation Manual* when necessary.

Preparation

Determine Slice I/O Unit I/O specifications. (See page 53.)
↓
Select the Slice I/O Units. (See page 53.)
↓
Confirm the specifications. (See page 53.)

Determine wiring methods. (See page 54.)
↓
Determine the power supply method. (See page 54.)
↓

Setting Up Hardware and Wiring

Layout cable.
↓
Setup and install Master Unit. (See page 55.)
↓
Setup and install Slice I/O Terminal. (See page 55.)
↓
Connect cables. (See page 57.)
↓

Starting Communications

Create the I/O table. (See page 57.)
↓
Start the system. (See page 58.)
↓
Create and register the Slice I/O table. (See page 58.)
↓

Confirming Operation

Check the Unit's LED indicators (See page 60.)
↓
Write data to check operation. (See page 60.)
↓

Note This section shows the minimum settings required to operate a Slice I/O Terminal. Refer to the DeviceNet master operation manual and *GRT1 Series Slice I/O Units Operation Manual* when more advanced settings are required for the actual application.

4-1-2 Example System Configuration

This section explains the operating procedure for the following minimal system configuration. Connect the communications cable between the DeviceNet Master Unit and DeviceNet Communications Unit after connecting the desired Slice I/O Units to the DeviceNet Communications Unit.

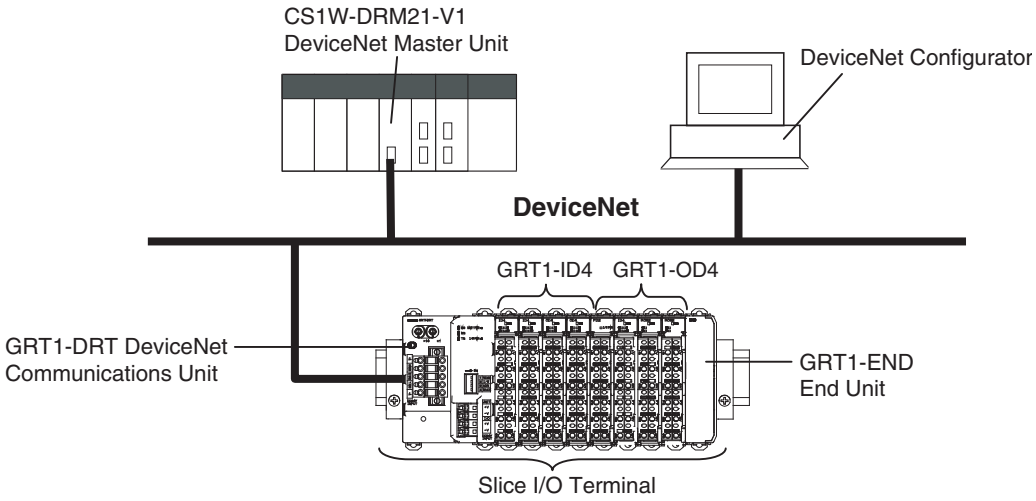

4-2 Preparation for Operation

4-2-1 Determining the Slice I/O Terminal's I/O Specifications

A single GRT1-DRT DeviceNet Communications Unit can control up to 64 Slice I/O Units with up to 1,024 I/O bits (64 words). In this example the Slice I/O Terminal has the following configuration.

- 16 inputs
- 16 outputs

4-2-2 Selecting the Slice I/O Units

The following devices were selected, as shown in the basic system configuration in *4-1-2 Example System Configuration*.

Master Unit: CS1W-DRM21-V1
DeviceNet Communications Unit: GRT1-DRT1
Slice I/O Units: Four GRT1-ID4, four GRT1-OD4, and one GRT1-END

Note OMRON has a wide variety of DeviceNet compatible Master Units and Slave Units available. Select the best Units for your application.

4-2-3 Confirming Specifications

Number of I/O Points Less Than 1,024 (64 Words)

Verify that the total number of I/O points is less than the maximum of 1,024 points (64 words). This example uses the following calculation:

4 Units × 4 inputs (16 points) + 4 Units × 4 outputs (16 points) = 32 points

Power Consumption Less Than 80 W/Block

Verify that the power consumption is less than 80 W per block. This example uses the following calculation:

1 GRT1-DRT Unit × 3 W = 3 W
4 GRT1-ID4 Units × 1 W = 4 W
4 GRT1-OD4 Units × 1 W = 4 W
Total = 11 W

Note If the total power consumption of the Slice I/O Units connected to the DeviceNet Communications Unit exceeds 80 W, divide the Slice I/O Terminal into blocks with Turnback Units and supply power to the added block through the GRT1-TBL Left Turnback Unit.

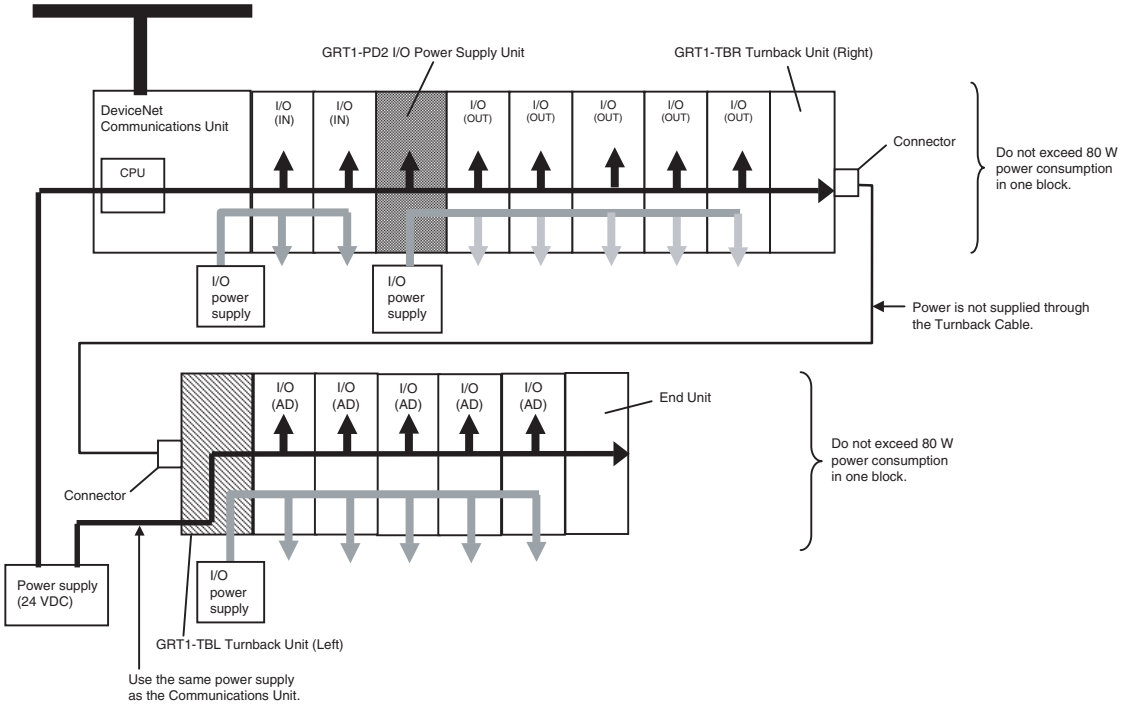

4-2-4 Determining the DeviceNet Network Wiring Method

Either thin cable or thick cable can be used in a DeviceNet network.

The cables can be branched freely using either T-branch Taps or multi-drop connections.

The maximum network length and total branch line length depend on the baud rate and type of cable used. For details on network configurations and specifications, refer to the *DeviceNet Operation Manual (W267)*.

Note Use the OMRON Connectors shown below when using Thick Cables and multi-drop connections.

XW4G-05C4-TF-D (With connector screws)

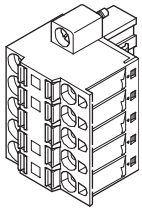

4-2-5 Determining the Communications Power Supply Method

Each node in the DeviceNet network (Master Unit and DeviceNet Communications Unit) must be supplied with a 24 V DC power supply for proper DeviceNet communications. The communications power, however, can be supplied by communications cables and does not require separate wiring.

For details on methods of supplying communications power, refer to the *DeviceNet Operation Manual* (W267).

4-3 Setting and Wiring Hardware

4-3-1 Mounting and Setting the Master Unit

The following diagrams show the component names and functions of the CS1W-DRM21, CS1W-DRM21-V1 or CJ1W-DRM21 Master Units, which can be mounted to a CS/CJ-series PLC. For details on Master Unit settings, refer to the *DeviceNet CS/CJ Series Units Operation Manual* (W380).

CS1W-DRM21 (-V1)

The Master Unit is mounted to the Backplane of the PLC in the same way as other Units are normally mounted.

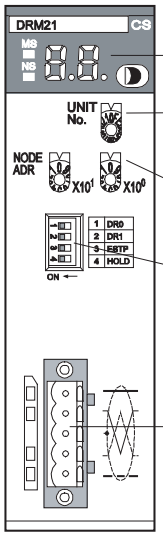

Indicators

Unit number switch
This rotary switch sets the Unit's one-digit hexadecimal unit number in the PLC.

Node address switches
These rotary switches set the two-digit decimal node address of the Unit.

DIP switch
Pins 1 and 2: Baud rate
Pin 3: Continue/stop remote I/O communications for errors (for Master function).
Pin 4: Hold/clear I/O for communications error (for Slave function).

Communications connector
This connector is connected to the Network communications cable. Communications power is also supplied through this connector. An XW4B-05C1-H1-D Parallel Connector with Screws is provided as the node connector.

CJ1W-DRM21

The Master Unit does not connect to a Backplane. The Units connect together by joining the connectors on the sides.

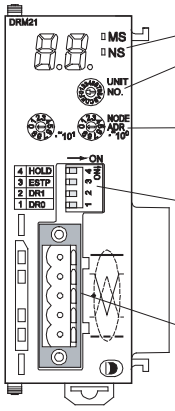

Indicators

Unit number switch
This rotary switch sets the Unit's one-digit hexadecimal unit number in the PLC.

Node address switches
These rotary switches set the two-digit decimal node address of the Unit.

DIP switch
Pins 1 and 2: Baud rate
Pin 3: Continue/stop remote I/O communications for errors (for Master function).
Pin 4: Hold/clear I/O for communications error (for Slave function).

Communications connector
This connector is connected to the Network communications cable. Communications power is also supplied through this connector. An XW4B-05C1-H1-D Parallel Connector with Screws is provided as the node connector.

Note For details on mounting Master Units to PLCs, and mounting PLCs to control panels, refer to the applicable PLC operation manual.

4-3-2 Mounting and Setting the Slice I/O Terminal

Setting the DeviceNet Communications Unit

Use the following flowchart when setting the DeviceNet Communications Unit according to the requirements of the application. For details on setting the Unit, refer to *SECTION 2 Component Names and Functions*.

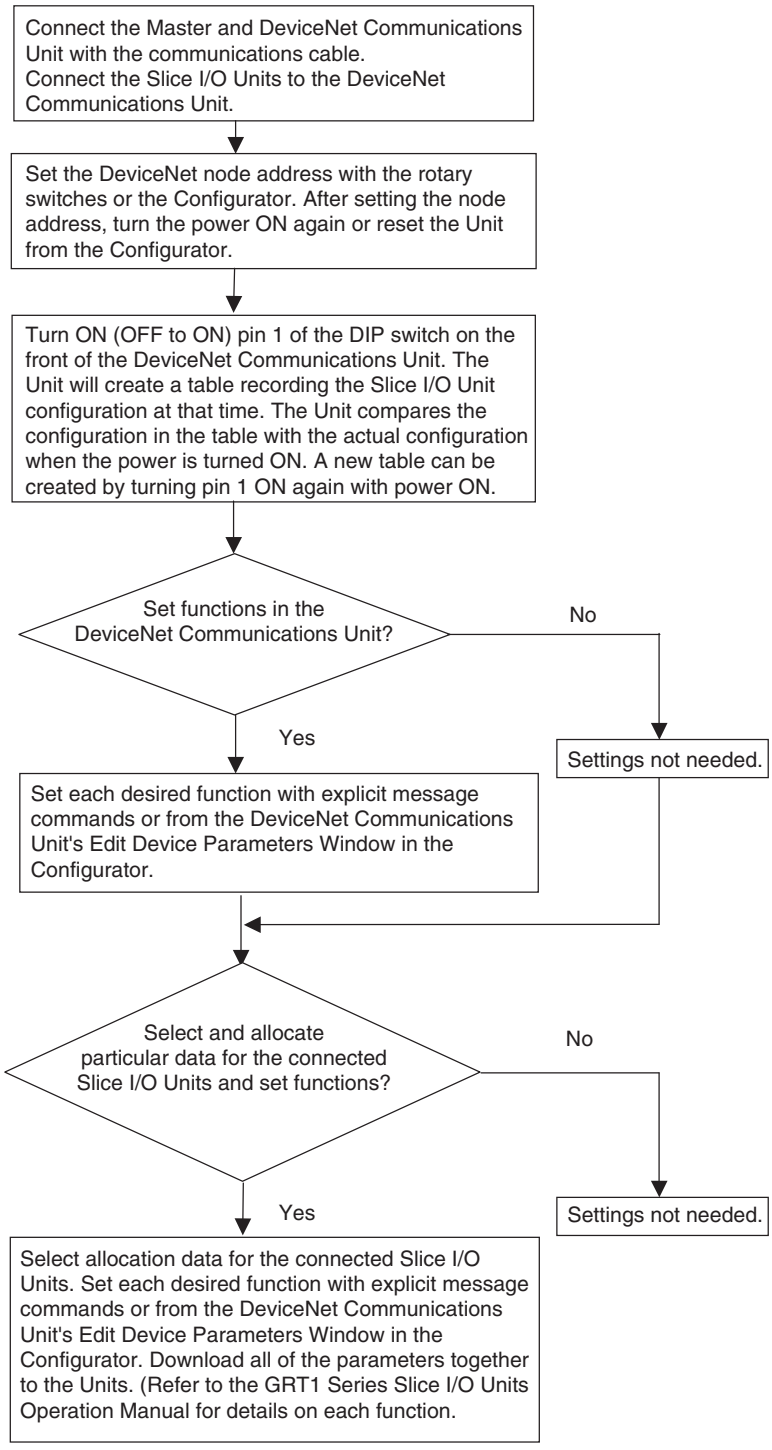
Connect the Master and DeviceNet Communications Unit with the communications cable.
Connect the Slice I/O Units to the DeviceNet Communications Unit.
Set the DeviceNet node address with the rotary switches or the Configurator. After setting the node address, turn the power ON again or reset the Unit from the Configurator.
Turn ON (OFF to ON) pin 1 of the DIP switch on the front of the DeviceNet Communications Unit. The Unit will create a table recording the Slice I/O Unit configuration at that time. The Unit compares the configuration in the table with the actual configuration when the power is turned ON. A new table can be created by turning pin 1 ON again with power ON.
Set functions in the DeviceNet Communications Unit?
No
Yes
Settings not needed.
Set each desired function with explicit message commands or from the DeviceNet Communications Unit's Edit Device Parameters Window in the Configurator.
Select and allocate particular data for the connected Slice I/O Units and set functions?
No
Yes
Settings not needed.
Select allocation data for the connected Slice I/O Units. Set each desired function with explicit message commands or from the DeviceNet Communications Unit's Edit Device Parameters Window in the Configurator. Download all of the parameters together to the Units. (Refer to the GRT1 Series Slice I/O Units Operation Manual for details on each function.

Mounting the Slice I/O Terminal

Slice I/O Terminals are mounted on to a DIN Track, as shown in the following diagram. Secure the bottom of the Terminal to the 35-mm DIN Track. Also, always secure the Terminal to the track between two End Plates.

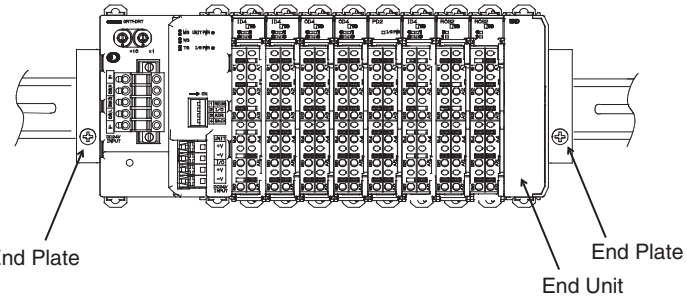

4-3-3 Connecting Cables

Connecting Communications Cables

Use the following procedure when connecting the cables. For details, refer to *5-2 Connecting Communications Cables* in the *DeviceNet DRT2 Series Slaves Operation Manual* (W404).

1. Assemble the communications cables.
   Prepare the communications cables and attach the connectors to the cables.
2. Connect the cables to the nodes.
   Connect the communications cable connectors to the node connectors on the Master Unit, T-branch Taps, and DeviceNet Communications Unit.

Wiring the Unit Power Supply

Crimp pin terminals to the Unit power supply cable. Connect the cable to the DeviceNet Communications Unit's screwless clamping terminals that supply the DeviceNet Communications Unit's internal circuits and the connected Slice I/O Units' internal circuits.

Wiring the I/O Power Supply

Crimp pin terminals to the I/O power supply cable. Connect the cable to the DeviceNet Communications Unit's screwless clamping terminals that provide the I/O power supply for I/O devices connected to the Slice I/O Units.

Wiring I/O

Crimp pin terminals to the I/O signal lines. Connect the I/O signal lines to the Slice I/O Units connected to the DeviceNet Communications Unit.

4-4 Starting Communications

After setting and wiring the hardware, turn ON the communications power supply, the internal power supply of each node, and the I/O power supply, and then start communications using the following procedure.

4-4-1 Creating I/O Tables for the Master Unit

I/O tables must be created in the CPU Unit to distinguish between the different Slaves mounted to the PLC. Turn ON the PLC to which the Master Unit is mounted, connect the Peripheral Devices to the PLC, and create the I/O tables. After the I/O tables have been created, turn OFF the power to the PLC.

The following example shows the procedure for creating I/O tables using a Programming Console. For details on creating I/O tables, refer to the operation manual for the Peripheral Device being used.

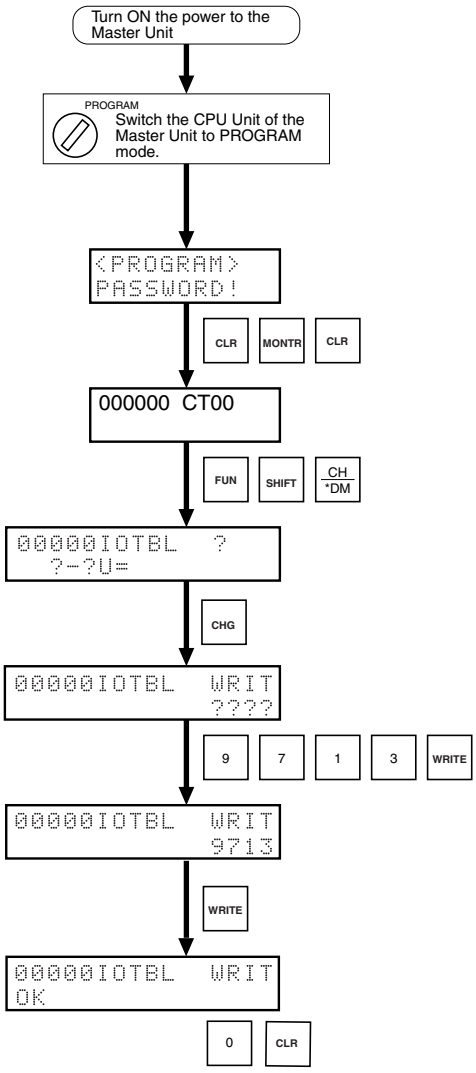

4-4-2 Starting the System

Turn ON the communications power supply and the power to other nodes in the following order.

1,2,3...

1. Turn ON the communications power supply.
2. Turn ON the power to the DeviceNet Communications Unit.
3. Turn ON the power to the Master Unit.

Note The power supplies listed above can all be turned ON simultaneously. The external I/O power supply can be turned ON at any time.

4-4-3 Creating and Registering Scan Lists

Scan lists are lists that register the information that is transferred between Master Units and Slaves. The Master Unit compares the scan list with the status of the Slave currently being communicated with, so communications with the Slave are always being checked.

For details on scan lists and remote I/O communications, refer to the DeviceNet master operation manual.

Note When a scan list is disabled, communications are possible with all Slaves on the DeviceNet Network with fixed allocations. Without scan lists, however, the Master Unit cannot check if there is an error in a Slave.
For normal operations, always enable the scan lists.

Precautions

User I/O Allocations

The user can allocate any words for Slave I/O for the DeviceNet I/O Areas (IN Area, OUT Area) in the Master Unit.

When user allocations are used, scan lists must be created with a DeviceNet Configurator and registered in the Master Unit. The scan list is enabled as soon as it is registered, and remote I/O communications start according to the scan list.

For details, refer to the *DeviceNet Operation Manual* (W267) and the *DeviceNet Configurator Operation Manual* (W328).

Fixed I/O Allocations

Slave I/O is allocated in the DeviceNet I/O area (IN Area, OUT Area) in the Master Unit in the same order as the Slave node addresses.

When fixed allocations are used, the scan lists are automatically created and registered using the Master Unit's software switches. The scan list is enabled as soon as it is registered, and remote I/O communications start according to the scan list. When scan list is enabled, the mode is called the scan list-enabled mode.

The registered scan lists can be cleared using the software switches. When scan lists are cleared (disabled), the mode is called the scan list-disabled mode.

Creating and Registering Fixed Allocation Scan Lists

The method of creating and registering scan lists for fixed allocation using Programming Console and a CS/CJ-series Master Unit is explained here. For details on operating Programming Devices, refer to the operation manual for the Programming Device being used with the PLC. For details on creating scan lists, refer to the DeviceNet master operation manual.

Creating and Registering Scan Lists

Use the following procedure to create, register, and enable the scan lists.

In the following example, n = 1500 + (25 × unit number).

Clearing and Creating Scan Lists

1,2,3...

1. Switch the PLC's operating mode to PROGRAM mode.
2. Enable the Master Unit functions. Set the Master Unit function enable switch (bit 06 of word n) from OFF to ON.
3. Clear the scan lists. Set the scan list clear switch (bit 01 of word n) from OFF to ON.
4. Select the fixed allocation areas 1 to 3. Set the Master Unit's setting switch for fixed allocation areas 1 to 3 (bit 00 of word n) from OFF to ON.
5. Enable the scan lists. Set the scan list enable switch (bit 00 of word n) from OFF to ON.
6. Switch the operating mode switch to RUN or MONITOR mode.

Checking the Normal Slave Table

Monitor the normal Slave table and check that the corresponding bits are ON. In the normal Slave table, the corresponding bits will turn ON for the nodes that are communicating normally.

4-5 Checking Operation

Use the procedures provided here to check that I/O communications are operating normally.

4-5-1 Indicator Status

I/O communications are operating normally if the MS and NS indicators for all nodes are lit green, and the 7-segment indicator on the front panel of the Master Unit is displaying the node address of the Master Unit as shown in the following diagram (when the Master Unit's node address is 00), and the scan list is enabled.

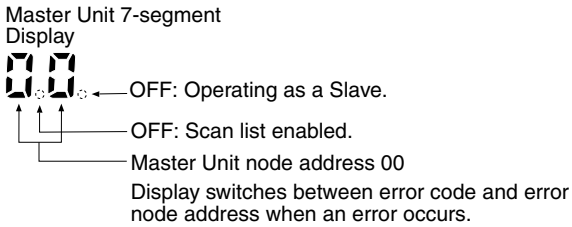

4-5-2 Checking I/O Communications

Connect the Programming Device for the PLC to the Master Unit, write the Master Unit's OUT Area and read the IN Area, and check that the data are the same in the Slaves.

Refer to the DeviceNet master operation manual for details on OUT Area and IN Area addresses and how to allocate Slave I/O.

Operating the Slice I/O Terminal's I/O Devices

Create the following ladder program in the PLC of the Master Unit, and check that the indicator on the GRT1-OD4 Output Unit goes ON when the switch on the GRT1-ID4 Input Unit is ON.

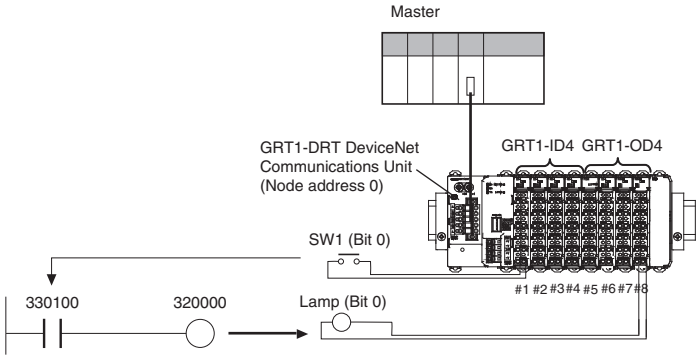

Note In the system configuration examples in this section, the Slice I/O Terminals I/O is allocated in the Master Unit's CIO Area as shown in the following diagram (fixed allocation area 1 of the Master Unit).

Input area

Word	15		8	0
CIO 3300	Communications Unit status flags			
CIO 3301	#4	#3	#2	#1

Output area

Word	15		8	0
CIO 3200	#8	#7	#6	#5

SECTION 5
Communications Characteristics

This section provides information on the time required for communications cycles in remote I/O communications and message communications.

5-1 Remote I/O Communications Characteristics 62
5-2 Message Communications Characteristics 66
5-2-1 Message Communications Time 66

5-1 Remote I/O Communications Characteristics

This section describes the characteristics of DeviceNet remote I/O communications with a Slice I/O Terminal connected to an OMRON Master. Use this section for reference when planning operations that require precise I/O timing.

The equations provided here are valid under the following conditions:

- The Master Unit is operating with the scan list enabled.
- All of the required Slaves are participating in communications.
- No errors are being indicated at the Master Unit.
- Messages are not being produced in the Network (from another company's configurator, for example).

Note (1) The values provided by these equations may not be accurate if another company's Master or Slave is being used in the network.

(2) This manual describes the communications with the Slice I/O Terminal only. For details on the Master Unit or overall DeviceNet network, refer to the *DeviceNet Operation Manual* (W267). For details on Slaves other than the Slice I/O Terminal, refer to the *DeviceNet DRT2 Series Slaves Operation Manual* (W404).

I/O Response Time

The I/O response time is the time it takes from the reception of an input signal at an Input Slave (Input Unit in the Slice I/O Terminal) to the output of the corresponding output signal at an Output Slave (Output Unit in the Slice I/O Terminal) after being processed by the PLC's ladder program.

Minimum I/O Response Time

The minimum I/O response time (T_{MIN}) is the total of the following terms:

$$T_{MIN} = T_{IN} + T_{SL\text{-}IN} + T_{SL\text{-}CI} + T_{RT\text{-}IN} + (T_{PLC} - T_{RF}) + T_{RT\text{-}OUT} + T_{SL\text{-}CI} + T_{SL\text{-}OUT} + T_{OUT}$$

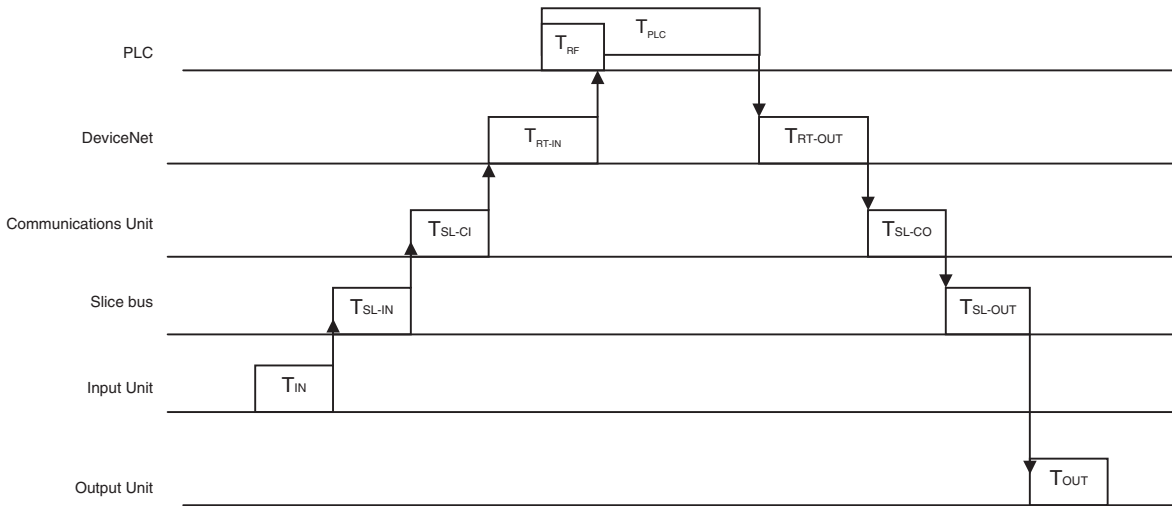

T_{IN}: The Input Unit's ON (OFF) delay
T_{OUT}: The Output Unit's ON (OFF) delay
$T_{SL\text{-}IN}$: The Slice bus' communications time (input data)
$T_{SL\text{-}OUT}$: The Slice bus' communications time (output data)
$T_{SL\text{-}CI}$: The Slice Communications Unit's input data processing time
$T_{SL\text{-}CO}$: The Slice Communications Unit's output data processing time

$T_{RT\text{-}IN}$: The Input Slave's communications time/Slave
$T_{RT\text{-}OUT}$: The Output Slave's communications time/Slave
T_{RT}: The DeviceNet communications time/Slave
T_{PLC}: The PLC's cycle time
T_{RF}: The PLC's DeviceNet Unit refresh time

Note Refer to the *GRT1 Series Slice I/O Units Operation Manual* for details on Input Unit's input delay times and Output Unit's output delay times.

Maximum I/O Response Time

The maximum I/O response time (T_{MAX}) is the total of the following terms:

$$T_{MIN} = T_{IN} + 2\times T_{SL} + T_{SL\text{-}CI} + T_{SL\text{-}CO} + 2\times T_{RM} + 2\times T_{PLC} + T_{RF} + T_{OUT}$$

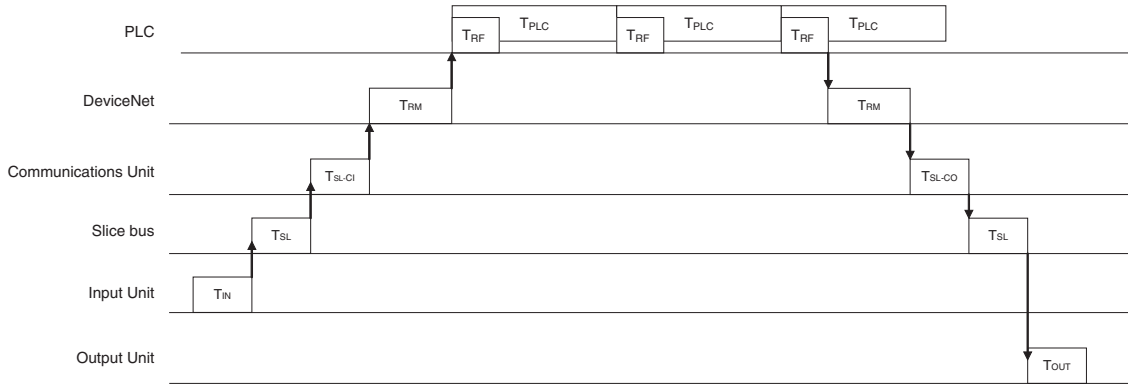

T_{IN}: The Input Unit's ON (OFF) delay
T_{OUT}: The Output Unit's ON (OFF) delay
T_{SL}: The Slice bus communications cycle time
$T_{SL\text{-}CI}$: The Slice Communications Unit's input data processing time
$T_{SL\text{-}CO}$: The Slice Communications Unit's output data processing time
T_{RM}: The entire DeviceNet communications cycle
T_{PLC}: The PLC's cycle time
T_{RF}: The PLC's DeviceNet Unit refresh time

Note Refer to the *GRT1 Series Slice I/O Units Operation Manual* for details on Input Unit's input delay times and Output Unit's output delay times

DeviceNet Communications Cycle Time (T_{RM})

The DeviceNet communications cycle time is the time from the completion of a Slave's remote I/O communications processing until remote I/O communications with the same Slave are processed again. The communications cycle time is used to calculate the maximum I/O response time.

The following equations show the communications cycle time (T_{RM}) when there is only one Master in the Network.

Even if the equation result is less than 2 ms, the minimum communications cycle time (TRM) is 2 ms.

T_{RM} = Σ (communications time per Slave: T_{RT})
+ SmartSlice processing time
+ Explicit message communications time
+ COS/Cyclic connection communications time [ms]
+ 0.01 × N + 1.0 [ms]

- Communications time per Slave:
  Time required for each Slave. (See the following page.)
  For a Slice I/O Terminal, this is the communications time for one of the Communications Unit's Slaves.
  The "Σ (communications time per Slave)" is the total of the processing times for the Slaves in the Network.
- SmartSlice processing time:
  This processing time is 3.5 ms, only when there isn't a single input, output or mixed I/O Slave in the network with more than 8 bytes of I/O data.
- Explicit message communications time:
  $0.11 \times T_B + 0.6$ [ms]
  Added as a delay time when explicit message communications (send or receive) are used.
  T_B: Constant (500 kbps: TB = 2; 125 kbps: TB = 4; 125 kbps: TB = 8)
- COS/Cyclic connection communications time:
  $(0.05 + 0.008 \times S) \times TB \times n$ [ms]
  Added as a delay time when COS/Cyclic connection is used for communications.
  S: Total size (bytes) of the COS/Cyclic connection's input size and output size.
  n: Number of nodes for which COS/Cyclic connections occur at the same time during one communications cycle.
- N: Number of Slaves

Communications Time per Slave $T_{RT\text{-}IN}$ and $T_{RT\text{-}OUT}$

The communications time per Slave is the time required for communications to be performed with a single Slave.

The following equations show the communications time per Slave (T_{RT}) for each kind of Slave Unit. For a Slice I/O Terminal, the communications time per Slave is the communications time per Slave with the DeviceNet Communications Unit. In the Slice I/O Terminal, 2 input words (4 bytes) are used for the I/O Unit interface's status flags, so those 4 bytes must be included in the total when calculating the number of input bytes.

Output Slaves with up to 8 Bytes of Output

$T_{RT} = 0.016 \times T_B \times S_{OUT1} + 0.11 \times T_B + 0.07$ [ms]

S_{OUT1}: The number of Output Slave output words

T_B: $T_B = 2$ at 500 kbps; $T_B = 4$ at 250 kbps; $T_B = 8$ at 125 kbps

Input Slaves with up to 8 Bytes of Input

$T_{RT} = 0.016 \times T_B \times S_{IN1} + 0.06 \times T_B + 0.05$ [ms]

S_{IN1}: The number of Input Slave input words

T_B: $T_B = 2$ at 500 kbps; $T_B = 4$ at 250 kbps; $T_B = 8$ at 125 kbps

Mixed I/O Slaves with up to 8 Bytes of I/O Words

$T_{RT} = 0.016 \times T_B \times (S_{OUT2} + S_{IN2}) + 0.11 \times T_B + 0.07$ [ms]

S_{OUT2}: The number of Mixed I/O Slave output words

S_{IN2}: The number of Mixed I/O Slave input word

T_B: $T_B = 2$ at 500 kbps; $T_B = 4$ at 250 kbps; $T_B = 8$ at 125 kbps

Input, Output, or Mixed I/O Slaves with More than 8 Bytes of I/O Words

$T_{RT} = T_{OH} + T_{BYTE\text{-}IN} \times B_{IN} + T_{BYTE\text{-}OUT} \times B_{OUT}$ [ms]

T_{OH}: The overhead protocol

$T_{BYTE\text{-}IN}$: The input byte transmission time

B_{IN}: The number of input bytes

$T_{BYTE-OUT}$: The output byte transmission time

B_{OUT}: The number of output bytes

Baud rate	T_{OH}	$T_{BYTE-IN}$	$T_{BYTE-OUT}$
500 kbps	0.306 ms	0.040 ms	0.036 ms
250 kbps	0.542 ms	0.073 ms	0.069 ms
125 kbps	1.014 ms	0.139 ms	0.135 ms

The number of output bytes (B_{OUT}) is 0 for Input Slaves, and the number of input bytes (B_{IN}) is 0 for Output Slaves.

Refresh Time (T_{RF})

The refresh time is the time required to exchange I/O data between the PLC's CPU Unit and the DeviceNet Master Unit. The PLC's cycle time is increased when a Master Unit is mounted, as shown below.

Note Refer to the PLC's operation manual for more details on the refresh time and the PLC's cycle time.

Master Units for CS, CJ, C200HX/HG/HE (-Z), and C200HS PLCs

When a Master Unit is mounted to the PLC, the PLC's cycle time (I/O refreshing) is increased by the amount shown in the following table.

Process	Processing time
I/O refreshing	DeviceNet Unit I/O refreshing: • For CS/CJ-series Master Unit: 0.7 + 0.001 × number of words (ms) (See note.) • For C200HX/HG/HE (-Z) PLCs: 1.72 + 0.022 × number of words (ms) (See note.) • For C200HS PLCs: 2.27 + 0.077 × number of words (ms) (See note.)

Note The number of words refreshed is the total number of words in the I/O Area that are allocated to the Slaves, including any unused words between those words actually used by the Slaves. For example, if there are only two Input Slaves with node addresses 1 and 5, the 5 input words for nodes 1 through 5 would be refreshed even though the input words for nodes 2, 3, and 4 are unused.
If message communications are being performed, just add the number of words used in message communications to the above number of words for whenever messages are being processed.

Slice Bus Communications Cycle Time (T_{SL})

The Slice bus communications cycle time is the delay in the Slice I/O Terminal from the end of communications with one I/O Unit until the start of communications with the next Unit.

T_{SL} = 0.66
+ (total number of input bytes of word Input Units) × 0.011
+ (total number of input bits of bit Input Units) × 0.009
+ (total number of output bytes of word Output Units) × 0.004
+ (total number of output bits of bit Output Units) × 0.001 [ms]

Communications Unit Processing Time (T_{SL-CI} and T_{SL-CO})

The DeviceNet Communications Unit processing time is the time required for software processing in the Communications Unit. The processing time is different for input data and output data, as shown below.

T_{SL-CI} = 0.71 + total number of input data bytes × 0.003 [ms]

T_{SL-CO} = 0.2 + total number of output data bytes × 0.001 [ms]

Slice Bus Communications Time (T_{SL-IN} and T_{SL-OUT})

The Slice bus communications time is the time required to communicate with an Input Unit (T_{SL-IN}) or Output Unit (T_{SL-OUT}) in the Slice I/O Terminal.

T_{SL-IN} = 0.01 × number of input data bytes [ms]

T_{SL-OUT} = 0.18 + total number of output data bytes × 0.002 [ms]

5-2 Message Communications Characteristics

5-2-1 Message Communications Time

The message communications time is the time required for a message sent to the Slice I/O Terminal to travel over the Network and arrive at the Slice I/O Terminal. (The message may be data from a SEND(090)/RECV(098) instruction or a FINS command from a CMND(490)/IOWR(223) instruction.)

Communications Time to the DeviceNet Communications Unit

Use the following equation to calculate the message communications time to the DeviceNet Communications Unit.

Message communications time = DeviceNet communications cycle time (T_{RM}) × {(Number of message bytes + 15) ÷ 6 + 1}

The number of message bytes is the number of bytes of data after the FINS command's command code. The equation for the DeviceNet communications cycle time (T_{RM}) is in *5-1 Remote I/O Communications Characteristics*.

Communications Time to the Slice I/O Unit

If a Slice I/O Unit is the final message destination, the message communications time over the Slice bus must be added to calculate the total message communications time. Use the following equation to calculate the message communications time over the Slice bus.

Message communications time = T_{SL} × Number of frames

Number of frames = Number of message bytes ÷ 30 (round up fractions)

Note

(1) If the CPU Unit attempts to send another message or receives a message from another node before the message communications time has finished, the response message being sent or the message being received from another node may be destroyed. Always perform message communications at intervals longer than the message communications time and use message instructions (SEND(090), RECV(098), CMND(490), and IOWR(223)). Never send messages to any one node at intervals less than the message communications time.
If send or receive messages are destroyed, the error record will be placed in the error history of the Master Unit. If an error occurs, read the error history using the FINS command or monitor the error history from the Configurator.

(2) The above equations provide find the approximate message communications time, but not the maximum time. The message communications time will depend on the frequency of the message communications, the load on the remote node, the communications cycle time, and other factors. For any one Master Unit, the message communications time may be greatly increased due to heavy loads.

SECTION 6
Troubleshooting

This section describes error processing and troubleshooting procedures needed to keep the DeviceNet Network operating properly.

6-1 Troubleshooting Overview 68
6-1-1 Checking the Slice I/O Terminal's Status 68
6-1-2 LED Indicators 68
6-2 LED Indicators and Error Processing 68
6-3 Reading the Error History with the DeviceNet Configurator 71
6-3-1 DeviceNet Communications Error History 71
6-3-2 Slice I/O Terminal Error History 72
6-4 Other Errors 74

6-1 Troubleshooting Overview

6-1-1 Checking the Slice I/O Terminal's Status

The following two methods can be used to check for Slice I/O Terminal errors. Use the appropriate method for the conditions.

Method	Programming Device	Features
Using LED indicators	Not required.	The general error status can be determined without using the DeviceNet Configurator.
Using DeviceNet Configurator	Required.	The DeviceNet Configurator can be used to find detailed information about the error from the error contents.

6-1-2 LED Indicators

The following LED indicators in the Slice I/O Terminal show the system status. The Slice I/O Terminal is operating normally when all of the LED indicators are lit green (including indicators on the DeviceNet Communications Unit, Slice I/O Units, Turnback Units, etc.).

MS LED: Indicates the status of the DeviceNet Communications Unit.
NS LED: Indicates the status of DeviceNet communications.
TS LED: Indicates the status of the entire Slice I/O Terminal.
UNIT PWR: Indicates the status of the Unit power supply.
I/O PWR: Indicates the status of the I/O power supply.

TS LEDs: Indicate the status of each Slice I/O Unit.

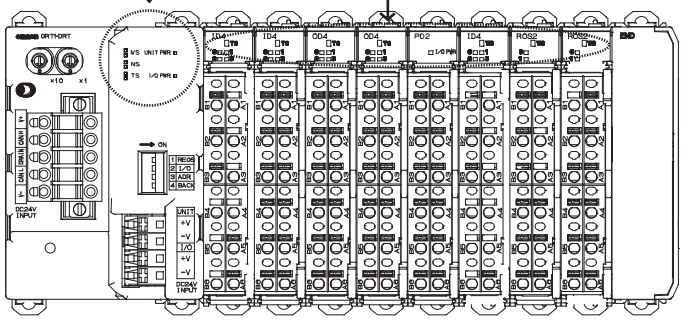

6-2 LED Indicators and Error Processing

The following table shows the meaning of the LED indicators on each Unit used in a Slice I/O Terminal, as well as error processing required when an error is indicated.

Unit	LED name	Color	Status	Meaning	Likely cause of error
DeviceNet Communications Unit	MS	Green	MS	Unit operating normally.	---
		---	MS	Power is not being supplied to the Unit.	Check whether power is being supplied by the Unit power supply.
		Red	MS	Unit hardware failure	Turn the power OFF and then ON again. Replace the Unit if the error recurs.
		Red	MS	Parameter data is invalid.	Use a Programming Device to write the correct data again.
				Backup data is invalid.	Backup the data again.
				Registration table data is invalid.	Register the I/O configuration table again.

Unit	LED name	Color	Status	Meaning	Likely cause of error
DeviceNet Communications Unit, continued	NS	Green	NS	DeviceNet communications are normal.	---
		---	NS	Waiting for completion of node address duplication check.	If the problem occurs only in a particular Slave, check the baud rate and restart the Slave.
		Red	NS	There is a node address duplication error at another Unit in the DeviceNet network.	Set the node addresses again to eliminate the duplication, and restart the Slice I/O Terminal.
				DeviceNet communications stopped because of too many data errors.	Check the following items and restart the Slice I/O Terminal. • Is the baud rate the same as the Master's? • Are lengths of cables (trunk and branch lines) correct? • Are cables short-circuited, broken, or loose? • Is terminating resistance connected to both ends of the trunk line only? • Is noise interference excessive?
		Red	NS	DeviceNet communications timeout occurred.	Check the following items. • Is the baud rate the same as the Master's? • Are lengths of cables (trunk and branch lines) correct? • Are cables short-circuited, broken, or loose? • Is terminating resistance connected to both ends of the trunk line only? • Is noise interference excessive?
		Green	NS	Online with DeviceNet, but waiting for a connection with the Master.	Check whether the Master has started properly. Check whether the Slice I/O Terminal is registered in the Master's scan list.

Unit	LED name	Color	Status	Meaning	Likely cause of error
DeviceNet Communications Unit, continued	TS	Green	TS	The Slice bus is operating normally.	---
		---	TS	Power is not being supplied to the Unit.	Check whether power is being supplied by the Unit power supply.
		Red	TS	Slice I/O Unit configuration error occurred.	Check the following items. • Are more than 64 I/O Units connected? • Are more than 128 bytes of I/O data being used? • Has the I/O configuration changed since the I/O configuration table was registered?
		Red	TS (for 2 s)	Backup operation failed.	Backup the data again.
				Restore operation failed.	Reinstall the Unit in which the data was being restored and turn the power ON again.
		Red	NS	Slice bus communications error occurred.	Check whether the Slice I/O Terminal's base block is connected properly.
				When the registration table function is enabled, the actual configuration does not match the registered configuration.	Correct the configuration and turn the power ON again.
		Green	NS	The total number of I/O points in the Slice I/O Terminals exceeds the maximum.	Correct the Unit configuration and number of I/O points and turn the power ON again.
				Restore operation in progress	Wait until the restore operation is completed.
				Backup operation in progress	Wait until the backup operation is completed.
				Joining nodes to network	Wait until the nodes have been added to the network.
	UNIT PWR	Green		Unit power supply is providing power normally.	---
		---		Unit power supply is not being supplied to the Unit.	Check whether power is being supplied by the Unit power supply.
	IO PWR	Green		I/O power supply is providing power normally.	---
		---		I/O power supply is not being supplied to the Unit.	Check whether power is being supplied by the I/O power supply.
Slice I/O Units	TS	Green	TS	Slice I/O Unit operating normally.	---
		---	TS	Unit power supply is not being supplied to the Unit.	Check whether power is being supplied by the Unit power supply.
		Red	TS	Unit hardware failure	Turn the power OFF and then ON again. Replace the Unit if the error recurs.
			TS	Communications error occurred.	Check whether the connector is inserted properly.
		Green	TS	Restore operation in progress	Wait until the restore operation is completed.
				Backup operation in progress	Wait until the backup operation is completed.
GRT1-PD2 I/O Power Supply Unit	IO PWR	Green		I/O power supply is providing power normally.	---
		---		I/O power supply is not being supplied to the Unit.	Check whether power is being supplied by the I/O power supply.

Unit	LED name	Color	Status	Meaning	Likely cause of error
GRT1-TBL Left Turnback Unit	UNIT PWR	Green	Lit	Unit power supply is providing power normally.	---
		---	Not lit	Unit power supply is not being supplied to the Unit.	Check whether power is being supplied by the Unit power supply.
	IO PWR	Green	Lit	I/O power supply is providing power normally.	---
		---	Not lit	I/O power supply is not being supplied to the Unit.	Check whether power is being supplied by the I/O power supply.

Lit Not lit Flashing

6-3 Reading the Error History with the DeviceNet Configurator

6-3-1 DeviceNet Communications Error History

The DeviceNet Configurator can check the four most recent DeviceNet Communications errors detected by the Communications Unit.

It is also possible to check the network power supply voltage that was being applied when the error occurred. If the network power supply voltage falls below 11 V, check and correct the network power supply system.

Error History Tab Page

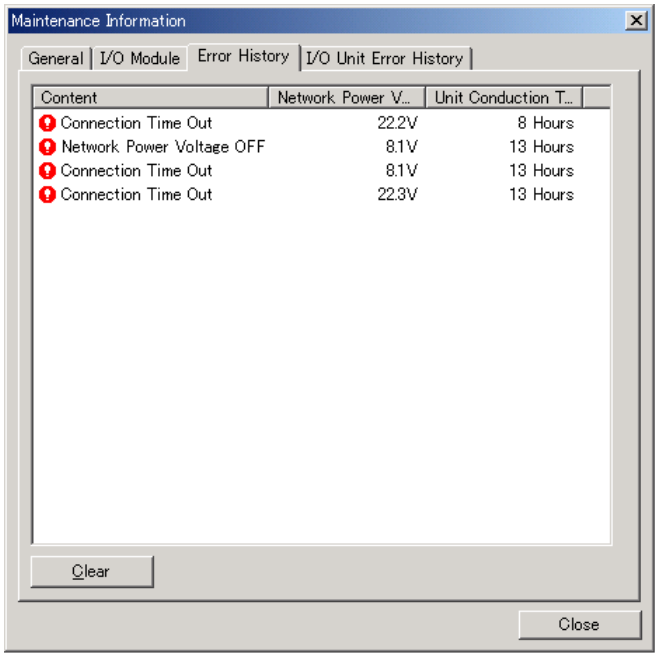

The following table shows the details of each indicated error.

Error name	Contents	Error processing	Saved in error history when power goes OFF?
Connection Time Out	DeviceNet communications timeout	Generally, the error is caused by noise and communications are restored automatically. If the problem occurs frequently, check the following items. • Is the baud rate the same as the Master's? • Are lengths of cables (trunk and branch lines) correct? • Are cables short-circuited, broken, or loose? • Is terminating resistance connected to both ends of the trunk line only? • Is noise interference excessive?	Yes
Bus Off error detected	DeviceNet communications bus off (Communications stopped because of too many data errors.)	Check the following items and restart the Slice I/O Terminal. • Is the baud rate the same as the Master's? • Are lengths of cables (trunk and branch lines) correct? • Are cables short-circuited, broken, or loose? • Is terminating resistance connected to both ends of the trunk line only? • Is noise interference excessive?	Yes
Node address duplication	There is a node address duplication error at another Unit in the DeviceNet network.	Set the node addresses again to eliminate the duplication, and restart the Slice I/O Terminal.	Yes

6-3-2 Slice I/O Terminal Error History

The DeviceNet Configurator can read the error history details of the most recent errors that occurred in the Slice I/O Terminal.

Error History Tab Page

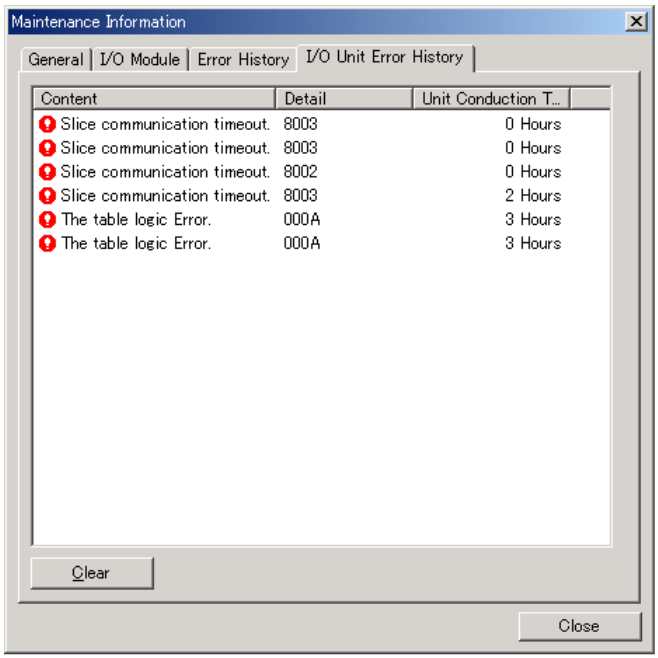

Communications Unit Error History

Error code (Hex)	Contents	Details		Saved in error history when power goes OFF?	Corrective action
		1st byte	2nd byte		
0002	WDT error	0x00	0x00	Yes	Replace the Unit if the error occurs frequently.
0370	Verification error (Slave missing)	00	00	No	Connect the missing Unit and restart.
0372	Verification error (unregistered Slave joined network)	0x80: Slice I/O	Node address (Hex)	No	Remove the unregistered Unit and restart.
021A	Setting table logic error Cause: There was a checksum error in on of the following tables or a set value was out-of-range. • Network parameters • Registration table • Slave parameters • Backup restore data	0x00	0x0A: Registration table 0x0B: Slave parameters 0x0C: Network parameters 0x0F: Backup restore data	Yes	Download the settings again.
0602	Memory access error Cause: • A hardware error occurred in the Unit's internal non-volatile memory. • E2P hardware error • Backup communications failure • FROM save failure • EEPROM save failure • FROM hardware error • ADR failure (communications failure)	0x01: Read error 0x02: Write error	0x07: Error history 0x09: Identity information 0x0A: Registration table 0x0C: Network parameters 0x0F: Backup restore data (E2P/FROM)	Yes (No for error history only)	Replace the Unit if the error occurs frequently.

Slice Bus Error History

Error code (Hex)	Contents	Details		Saved in error history when power goes OFF?	Corrective action
		1st byte	2nd byte		
0300	Backup data reception error	0x80: Slice I/O	Node address (Hex)	No	Verify that the Unit is connected properly. Check whether there is excessive noise in the surroundings.
0374	Transmission error Cause: A transmission error occurred.	0x80: Slice I/O	Node address (Hex)	No	Verify that the Unit is connected properly. Check whether there is excessive noise in the surroundings.
0375	Communications stopped due to a transmission error. Cause: The Unit is set to stop communications for communications errors and a transmission error occurred. (Error code 0374 will not occur in this case.)	0x80: Slice I/O	Node address (Hex)	Yes	Verify that the Unit is connected properly. Check whether there is excessive noise in the surroundings.

Error code (Hex)	Contents	Details		Saved in error history when power goes OFF?	Corrective action
		1st byte	2nd byte		
0376	Slave duplication error Cause: A Slave duplication error occurred.	0x80: Slice I/O	Node address (Hex)	No	Verify that the Unit is connected properly and turn the power ON again.
0378	I/O size error	0x00	0x00	No	Verify that the Unit is connected properly and turn the power ON again.
0379	Slice configuration error	0x00	0x00	No	Verify that the Unit is connected properly and turn the power ON again.

6-4 Other Errors

Status	Likely cause and remedy
The Communications Unit's Unit Power indicator is flashing.	The Unit power supply capacity is insufficient. Check the entire Slice I/O Terminal's power supply requirement and replace the power supply with one that has sufficient capacity.
The Communications Unit repeatedly checks indicators (MS/NS indicator flashing green and red). The I/O Unit repeatedly checks indicators (TS indicator flashing green and red).	The Unit power supply capacity is insufficient. Check the entire Slice I/O Terminal's power supply requirement and replace the power supply with one that has sufficient capacity.
The Communications Unit's TS indicator flashes green. The I/O Unit's indicator in front of the bad connection lights green and the indicator behind the bad connection goes OFF.	The slide connector on the left side of the affected Unit is not connected properly. Connect this slide connector properly and turn the power ON again. 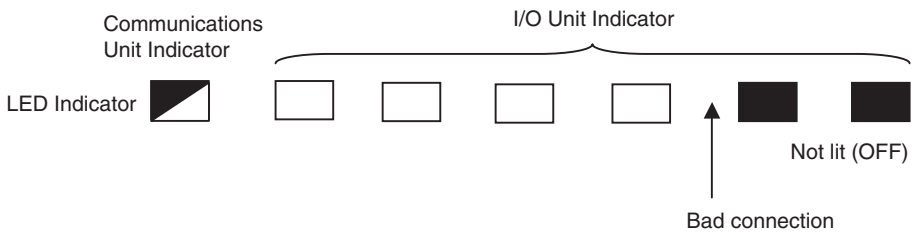
The Communications Unit's TS indicator flashes green and the I/O Unit's TS indicator flashes green.	The End Unit is not connected properly. Connect the End Unit properly and turn the power ON again. 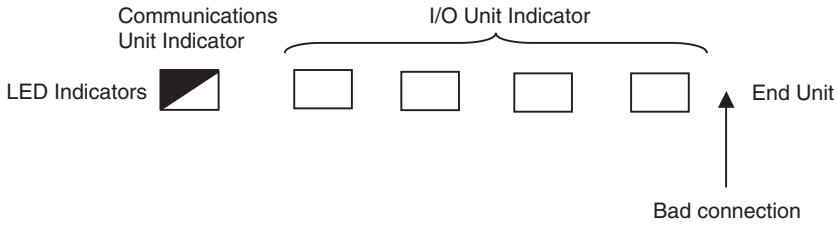
After the Communications Unit's MS indicator lights green, NS indicator lights red immediately, without flashing.	Check the following items and restart the problem Slave. • A node address is duplicated. Check all of the node addresses and set them again to eliminate the duplication. • Check whether the baud rates match on the Master and all Slaves. If there are any Slaves with different baud rates, set them to the same baud rate. • See the troubleshooting steps below under the error heading "The NS indicator lights green but changes to red after a short time." • If a particular Slave's NS indicator is always red, replace that Slave.

Status	Likely cause and remedy
The NS indicator lights green but changes to red after a short time. OR The NS indicator lights green but flashes red after a short time.	Check the following points and then restart the faulty Slave. • Verify that there are 121-Ω Terminating Resistors connected at both ends of the trunk line. Connect 121-Ω Terminating Resistors if the resistance is not correct. • Check whether the baud rates match on the Master and all Slaves. If there are any Slaves with different baud rates, set them to the same baud rate. • Check whether all of the Slaves' settings are correct. • Check whether the communications cables are connected properly. • Check whether the power supply is set correctly and the power supply cables are connected properly. • Check all the nodes for broken wires in the communications and power supply cables attached to the connectors. • Check whether communications power is correctly supplied to the network. • If there is nearby equipment that generates electrical noise, take steps to shield the Master, Slaves, and communications cables from the noise. • If an error has occurred in a network with an OMRON Master Unit, refer to the DeviceNet master operation manual. If an error has occurred in a network with a another company's Master Unit, refer to the relevant operation manual. • If a particular Slave's NS indicator is always red, replace that Slave.
The NS indicator remains OFF.	• Check whether the baud rates match on the Master and all Slaves. If there are any Slaves with different baud rates, set them to the same baud rate. • Check that the Slave's connector is connected correctly. • Check that the 24 VDC communications power supply is being supplied properly. • Check that the Master is operating properly. When using an OMRON Master Unit, refer to the DeviceNet master operation manual. If another company's Master is being used, refer to the relevant operation manual. • Check whether the communications cables are connected properly. • Check whether the power supply is set correctly and the power supply cables are connected properly. • Check for broken wires in the communications and power supply cables attached to the connectors.
The NS indicator continuously flashes green.	• Check that the Master is operating properly. When using an OMRON master, refer to the DeviceNet master operation manual. If another company's Master is being used, refer to the relevant operation manual. • Check whether the Slave is registered in the Master's scan list. If an OMRON Master Unit is being used, a new Slave cannot be added to the network if the Master is operating with the scan list enabled. First clear the scan list, check that all the Slaves have joined the network, and then create the scan list. If another company's Master is being used, refer to the relevant operation manual for details on registering a new Slave in its scan list.

Status	Likely cause and remedy
The NS indicator alternates between being a constant green and flashing green. OR The NS indicator alternates between flashing red and flashing green.	When using an OMRON Master Unit, check the following points and perform the error processing steps according to the indicator status. • Register the scan list again. First clear the scan list, check that all the Slaves have joined the network, and then create the scan list. • Check that the Slave's allocated I/O Area does not overlap with that of another Slave. If there is an overlap, change the Slave's node address to eliminate the overlap. • Check that the allocated I/O Area does not exceed the allowable range shown below. If the I/O Area exceeds this range, change the Slave's node address to correct the problem. When using another company's Master Unit, check that the I/O size registered in the Master's scan list matches the actual I/O size of the Slave. The I/O size is recorded in the following attributes of the Connection Object: Interface 2 (Polled I/O Connection) Produced Connection Size (input size) Consumed Connection Size (output size) OR: Interface 3 (Bit-strobed I/O Connection) Produced Connection Size (input size) Refer to *Appendix A DeviceNet Explicit Messages*, and register the correct values in the Master Unit's scan list. Refer to the DeviceNet master operation manual for details on registering values.

Appendix A
DeviceNet Explicit Messages

DeviceNet explicit messages sent from the Master Unit to a GRT1 Series DeviceNet Communications Unit can be used to read or write any parameter of a specified GRT1 Series DeviceNet Communications Unit.

The DeviceNet Communications Units process the commands sent from the Master and then return responses.

Basic Format of Explicit Messages

The basic format of each command and response is shown below.

Command Block

Destination node address	Service code	Class ID	Instance ID	Attribute ID	Data

Destination Node Address

The node address of the Unit that is sending the explicit messages (commands) is specified as a single-byte hexadecimal.

Service Code, Class ID, Instance ID, Attribute ID

The parameters used for specifying the command, processing object, and processing content.

Note The number of bytes designated for Class ID, Instance ID, and Attribute ID depend on the Master Unit. When sent from an OMRON DeviceNet Master, the Class ID and Instance ID are 2 bytes (4 digits), and Attribute ID is 1 byte (2 digits).

Data

Data is not required when the read command is used.

Response Block

Normal Response Block

Number of bytes received	Source node address	Service code	Data

Error Response Block

Number of bytes received: 0004 Hex (fixed)	Source node address	Service code	Error code

Number of Bytes Received

The number of bytes received from the source node address is returned in hexadecimal. When an error response is returned for an explicit message, the number of bytes is always 0004 Hex.

Source Node Address

The node address of the node from which the command was sent is returned in hexadecimal.

Service Code

For normal completion, the value when the leftmost bit of the service code specified in the command turns ON is stored as shown in the following table.

Function	Command service code	Response service code
Write data	10 Hex	90 Hex
Read data	0E Hex	8E Hex
Reset	05 Hex	85 Hex
Save	16 Hex	96 Hex

When an error response is returned for an explicit message, the value is always 94 Hex.

Data

Read data is included only when a read command is executed.

Error Codes

The explicit message error code. For details, refer to the list of error codes in the following table.

List of Error Codes

Response code	Error name	Cause
08FF	Service not supported	The Service code is incorrect.
09FF	Invalid Attribute value	The specified Attribute value is not supported. The data written was outside valid range.
16FF	Object does not exist	The specified Instance ID is not supported.
15FF	Too much data	The data is larger than the specified size.
13FF	Not enough data	The data is smaller than the specified size.
0CFF	Object state conflict	The specified command cannot be executed due to an internal error.
20FF	Invalid parameter	The specified operation command data is not supported.
0EFF	Attribute not settable	An Attribute ID supported only for reading has been executed for a write service code.
10FF	Device state conflict	The specified command cannot be executed due to an internal error.
14FF	Attribute not supported	The specified Attribute is not supported.
19FF	Store operation failure	The data cannot be stored in memory.
2AFF	Group 2 only server general failure	The specified command or Attribute is not supported or the Attribute was not set.

Explicit Messages Common to All Slaves

Reading General Status

Explicit message	Read/write	Function	Command					Response
			Service code	Class ID	Instance ID	Attribute ID	Data size	
General Status Read	Read	Reads the specified Communications Unit's status flags (8 bits).	0E Hex	95 Hex	01 Hex	65 Hex	---	1 byte

Note Refer to *2-2-3 I/O Allocation to the Slice I/O Terminal's Master Unit* for information on the Generic Status Flags

Setting and Monitoring the Unit Conduction Time

Explicit message	Read/ write	Function	Command					Response
			Service code	Class ID	Instance ID	Attribute ID	Data size	
Unit Maintenance Set Value	Read	Reads the set value for the Communications Unit's Unit Conduction Time (Power ON time, unit: 0.1 hr)	0E Hex	95 Hex	01 Hex	73 Hex	---	4 bytes 00000000 to FFFFFFFF Hex (0 to 4294967295)
	Write	Writes the set value for the Communications Unit's Unit Conduction Time (Power ON time, unit: 0.1 hr)	10 Hex	95 Hex	01 Hex	73 Hex	4 bytes 00000000 to FFFFFFFF Hex (0 to 4294967295)	---
Unit Maintenance Present Value	Read	Reads the present value for the Communications Unit's Unit Conduction Time (Power ON time, unit: 0.1 hr)	0E Hex	95 Hex	01 Hex	71 Hex	---	4 bytes 00000000 to FFFFFFFF Hex (0 to 4294967295)
Unit Maintenance Flag	Read	Reads the monitor status of the Communications Unit's Unit Conduction Time (Power ON time)	0E Hex	95 Hex	01 Hex	72 Hex	---	1 byte 00: Within range 01: Out of range (over the monitor value)

Alarm Information Read

Explicit message	Read/write	Function	Command					Response
			Service code	Class ID	Instance ID	Attribute ID	Data size	
Alarm Information Read	Read	Reads the Slice I/O Terminal's alarm data.	0E Hex	9C Hex	01 Hex	73 Hex	---	32 bytes (See note.)

Note The following tables show the alarm data details.

Word offset	Bit			
	15 12	11 8	7 4	3 0
+0	Slice I/O Node #4	Slice I/O Node #3	Slice I/O Node #2	Slice I/O Node #1
+1	Slice I/O Node #8	Slice I/O Node #7	Slice I/O Node #6	Slice I/O Node #5
+2	Slice I/O Node #12	Slice I/O Node #11	Slice I/O Node #10	Slice I/O Node #9
:				
+13	Slice I/O Node #56	Slice I/O Node #55	Slice I/O Node #54	Slice I/O Node #53
+14	Slice I/O Node #60	Slice I/O Node #59	Slice I/O Node #58	Slice I/O Node #57
+15	Slice I/O Node #64	Slice I/O Node #63	Slice I/O Node #62	Slice I/O Node #61

The 4 bits allocated to each Slice I/O Node have the following functions:

Bit 0	Warning (Minor error)
Bit 1	Alarm (Major error)
Bit 2	Reserved
Bit 3	Reserved

Note The Warning/Alarm details depend on the Communications Unit. Refer to the Unit's operation manual.

Using Explicit Messages

The following example shows how to use explicit messages with a DeviceNet Communications Unit connected to a CS1W-DRM21 DeviceNet Master Unit.

Example: Sending a “Unit Maintenance Present Value Read” command to the DeviceNet Communications Unit.

Example: DeviceNet Master Unit’s node address: 05

Unit number: 0

Unit address: FE Hex (or 10 Hex)

DeviceNet Communication Unit’s node address: 11

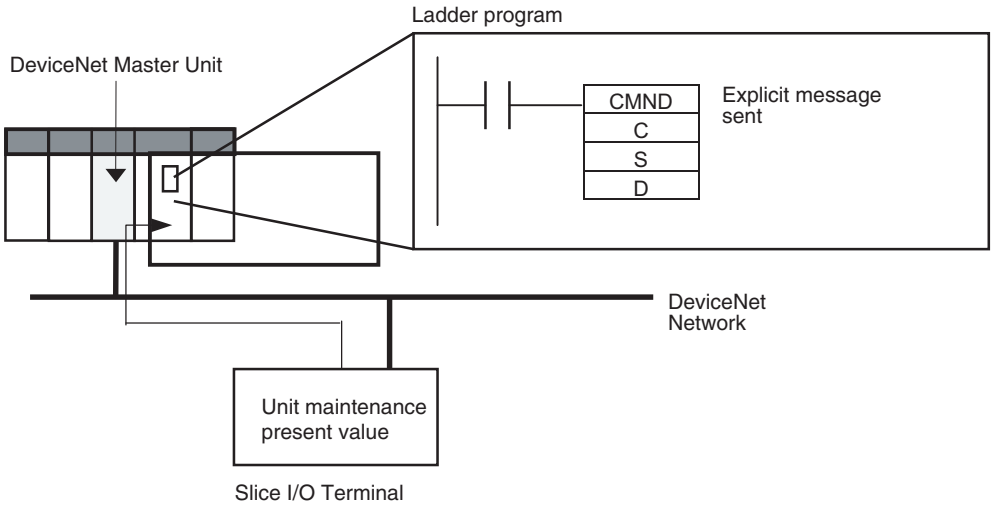

Operation

Reads the Unit maintenance PV of the Slice I/O Terminal’s DeviceNet Communications Unit.

The data is read using the EXPLICIT MESSAGE SEND command (2801).

The command data is written in words starting from D01000 in the PLC and the response data is stored in words starting from D02000.

If the command does not end normally, the end code is stored in D00006 and the send command is re-executed.

Command Details

- [CMND S D C]
  S: D01000
  D (first response word): D02000
  C: D00000

Contents of S

Address	Contents (Hex)	Meaning
D01000	28 01	Command code
D01001	0B 0E	DeviceNet Communications Unit's node address: 11 Service code: 0E Hex
D01002	00 95	Class ID: 0095 Hex
D01003	00 01	Instance ID: 0001 Hex
D01004	71 **	Attribute ID: 71 ** Hex (Set any value for the blank boxes.)

Contents of C

Address	Contents (Hex)	Meaning
D00000	00 09	Number of bytes of command data
D00001	00 0C	Number of bytes of response data
D00002	00 00	Destination DeviceNet Master Unit's network address: 0
D00003	05 FE	Destination DeviceNet Master Unit's node address: 5 Destination DeviceNet Master Unit's unit address: FE Hex (or 10 Hex)
D00004	00 00	Response required Communications port number: 0 Number of retries: 0
D00005	00 3C	Response monitoring time: 6 s

Response

Contents of D

Address	Contents (Hex)	Meaning
D02000	28 01	
D02001	00 00	
D02002	00 02	
D02003	0B 8E	Response source node address: 11 (0B Hex) Normal completion: 8E Hex
D02004 to D02005	00 00	Unit Maintenance PV (4 bytes of data)

Appendix B

Using Another Company's Master Unit

This appendix explains how to operate an OMRON Slave when the Slave is connected to a Master manufactured by another company.

Note If the Slave has outputs, do not communicate with the Master through a bit strobe connection.
There are several DeviceNet I/O communications methods, including poll and bit strobe connections, but DeviceNet specifications allow the bit strobe connection with inputs only.
OMRON Master Units conform to these specifications and communicate with Output Slaves through a poll connection, but some other company's Masters allow bit strobe connections with Output Slaves. Before connecting an OMRON Slave to another company's Master, verify the Master's connection specifications.

When connecting an OMRON Communications Unit to another company's Master, it may be necessary to install the OMRON Communications Unit's EDS file in the other company's configurator to set the Communications Unit's information in the Master. With some companies' Masters, the Communications Units can be connected without making settings.

With some other companies' configurators and depending on the Communications Unit being used, installing the OMRON Communications Unit's EDS file in the configurator will allow you to make various parameter settings from the configurator.

Note If you cannot obtain a copy of the EDS file or the other company's configurator does not support EDS files, settings such as the connection type and data size must be input directly.

Installing EDS Files

EDS files are provided by the manufacturer for each Communications Unit and contain settings such as the Communications Unit's ID and I/O data sizes. If the EDS file is installed in the configurator, the Communications Unit's settings can be changed and the I/O size will be input automatically when the Master's scan list is created.

EDS files for the Communications Units described in this manual can be downloaded from the product catalog at the following website:

→http://www.odva.astem.or.jp/

Locate the EDS file for the desired Communications Unit and install that EDS file in the configurator. Refer to the Configurator’s operation manual for details on the installation procedure.

More Detailed DeviceNet Specifications for Communications Units

The following device profiles contain more detailed DeviceNet specifications for Communications Units if more information needs to be registered in the scan list.

DeviceNet Communications Unit's Device Profile

General data	Compatible DeviceNet Specifications	Volume I - Release 2.0 Volume II - Release 2.0	
	Vendor name	OMRON Corporation	Vendor ID = 47
	Device profile name	Communications Unit: Communications Adapter	Profile number = 12
	Manufacturer catalog number	W454	
	Manufacturer revision	1.01	
Physical conformance data	Network current consumption	22 mA	
	Connector type	Open plug	
	Physical insulation	No	
	Supported indicators	Module, Network	
	MAC ID setting	Software switch or rotary switch (software switch: No. 64 to 99)	
	Default MAC ID	0	
	Baud rate setting	None (automatic recognition)	
	Supported baud rates	125 kbps, 250 kbps, and 500 kbps	
Communications data	Predefined Master/Communications Unit connection set	Group 2 only server	
	Dynamic connection support (UCMM)	No	
	Explicit message fragmentation support	Yes	

Object Mounting

Identity Object (0x01)

Object class	**Attribute**	Not supported
	Service	Not supported

Object instance	**Attribute**	**ID**	**Contents**	**Get (read)**	**Set (write)**	**Value**
		1	Vendor	Yes	No	47
		2	Device type	Yes	No	12
		3	Product code	Yes	No	1388
		4	Revision	Yes	No	1.1
		5	Status (bits supported)	Yes	No	Bit 0 only
		6	Serial number	Yes	No	Unique for each Unit
		7	Product name	Yes	No	GRT1-DRT
		8	State	No	No	
	Service	**DeviceNet service**		**Parameter option**		
		05	Reset	No		
		0E	Get_Attribute_Single	No		

Message Router Object (0x02)

Object class	**Attribute**	Not supported
	Service	Not supported
Object instance	**Attribute**	Not supported
	Service	Not supported
Vendor specification addition		None

DeviceNet Object (0x03)

Object class	**Attribute**	Not supported
	Service	Not supported

Object instance	Attribute	ID	Contents	Get (read)	Set (write)	Value
		1	MAC ID	Yes	Yes	
		2	Baud rate	Yes	No	
		3	BOI	Yes	No	00 (hexadecimal)
		4	Bus Off counter	Yes	No	
		5	Allocation information	Yes	No	
		6	MAC ID switch changed	No	No	
		7	Baud rate switch changed	No	No	
		8	MAC ID switch value	No	No	
		9	Baud rate switch value	No	No	
	Service	**DeviceNet service**		**Parameter option**		
		0E	Get_Attribute_Single	None		
		4B	Allocate_Master/ Slave_Connection_Set	None		
		4C	Release_Master/ Slave_Connection_Set	None		

Note SET condition for MAC ID: MAC ID No. 64 to 99.

Assembly Object (0x04)

Object class	Attribute	Not supported
	Service	Not supported

Object instance	Attribute	ID	Contents	Get (read)	Set (write)	Value
		1	Number of members in list	No	No	
		2	Member list	No	No	
		3	Data	Yes	No	
	Service	**DeviceNet service**		**Parameter option**		
		0E	Get_Attribute_Single	None		

The following table shows the assembly instance.

Communications Unit (Input)

Instance number	Bit allocation								Remarks
Instance 144 Input data	Slice I/O Input data (variable size)								Input data
Instance 145 Generic Status	D7	D6	D5	D4	D3	D2	D1	D0	Status data
	D15	D14	D13	D12	D11	D10	D9	D8	
Instance 146 Registered flags + Abnormal flags	R8	R7	R6	R5	R4	R3	R2	R1	Registered flags (R) + Abnormal flags (A) Numbers in the table correspond to node addresses.
	R16	R15	R14	R13	R12	R11	R10	R9	
	R24	R23	R22	R21	R20	R19	R18	R17	
	R32	R31	R30	R29	R28	R27	R26	R25	
	R40	R39	R38	R37	R36	R35	R34	R33	
	R48	R47	R46	R45	R44	R43	R42	R41	
	R56	R55	R54	R53	R52	R51	R50	R49	
	R64	R63	R62	R61	R60	R59	R58	R57	
	A8	A7	A6	A5	A4	A3	A2	A1	
	A16	A15	A14	A13	A12	A11	A10	A9	
	A24	A23	A22	A21	A20	A19	A18	A17	
	A32	A31	A30	A29	A28	A27	A26	A25	
	A40	A39	A38	A37	A36	A35	A34	A33	
	A48	A47	A46	A45	A44	A43	A42	A41	
	A56	A55	A54	A53	A52	A51	A50	A49	
	A64	A63	A62	A61	A60	A59	A58	A57	
Instance 147 Generic Status + Input data	D7	D6	D5	D4	D3	D2	D1	D0	Status data + Input data
	D15	D14	D13	D12	D11	D10	D9	D8	
	Slice I/O Input data (variable size)								

General-purpose Communications Unit (Output)

Instance number	Bit allocation	Remarks
Instance 160 Output data	Slice I/O Output data (variable size)	Output data

Connection Object (0x05)

Object class	**Attribute**	Not supported
	Service	Not supported
	Maximum number of active connections	1

Object instance 1	Section	Information		Maximum number of instances		
	Instance type	Explicit Message		1		
	Production trigger	Cyclic				
	Transport type	Server				
	Transport class	3				
	Attribute	**ID**	**Contents**	**Get (read)**	**Set (write)**	**Value**
		1	State	Yes	No	
		2	Instance type	Yes	No	00 (hexadecimal)
		3	Transport class trigger	Yes	No	83 (hexadecimal)
		4	Produced connection ID	Yes	No	---
		5	Consumed connection ID	Yes	No	---
		6	Initial comm. characteristics	Yes	No	21 (hexadecimal)
		7	Produced connection size	Yes	No	0026 (hexadecimal)
		8	Consumed connection size	Yes	No	0026 (hexadecimal)
		9	Expected packet rate	Yes	Yes	
		12	Watchdog timeout action	Yes	No	01 (hexadecimal)
		13	Produced connection path length	Yes	No	0000 (hexadecimal)
		14	Produced connection path	Yes	No	
		15	Consumed connection path length	Yes	No	0000 (hexadecimal)
		16	Consumed connection path	Yes	No	
		17	Production inhibit time	Yes	No	0000 (hexadecimal)
	Service	**DeviceNet service**		**Parameter option**		
		05	Reset	None		
		0E	Get_Attribute_Single	None		
		10	Set_Attribute_Single	None		

Object instance 2	Section	Information		Maximum number of instances		
	Instance type	Explicit Message		1		
	Production trigger	Cyclic				
	Transport type	Server				
	Transport class	2				
	Attribute	**ID**	**Contents**	**Get (read)**	**Set (write)**	**Value**
		1	State	Yes	No	
		2	Instance type	Yes	No	01 (hexadecimal)
		3	Transport class trigger	Yes	No	82 (hexadecimal)
		4	Produced connection ID	Yes	No	---
		5	Consumed connection ID	Yes	No	---
		6	Initial comm. characteristics	Yes	No	01 (hexadecimal)
		7	Produced connection size	Yes	No	See note.
		8	Consumed connection size	Yes	No	See note.
		9	Expected packet rate	Yes	Yes	
		12	Watchdog timeout action	Yes	No	00 (hexadecimal)
		13	Produced connection path length	Yes	No	See note.
		14	Produced connection path	Yes	No	See note.
		15	Consumed connection path length	Yes	No	See note.
		16	Consumed connection path	Yes	No	See note.
		17	Production inhibit time	Yes	No	0000 (hexadecimal)
	Service	**DeviceNet service**		**Parameter option**		
		05	Reset	None		
		0E	Get_Attribute_Single	None		
		10	Set_Attribute_Single	None		

Note See the following table.

Model	Name	Produced connection size	Produced connection path length	Produced connection path	Consumed connection path length	Consumed connection path
GRT1-DRT	Input Data	Variable	0006	20_04_24_05_30_03	0000	---
	Generic Status	0002	0006	20_04_24_64_30_03	0000	---
	Registered Flag + Abnormal Flag	0016	0006	20_04_24_64_30_03	0000	---
	Generic Status + Input Data	Variable	0006	20_04_24_66_30_03	0000	---
	Output Data	Variable	0000	20_04_24_66_30_03	0000	---

Object instance 3	Section	Information		Maximum number of instances		
	Instance type	Bit Strobed I/O		1		
	Production trigger	Cyclic				
	Transport type	Server				
	Transport class	2				
	Attribute	**ID**	**Contents**	**Get (read)**	**Set (write)**	**Value**
		1	State	Yes	No	
		2	Instance type	Yes	No	01 (hexadecimal)
		3	Transport class trigger	Yes	No	82 (hexadecimal)
		4	Produced connection ID	Yes	No	---
		5	Consumed connection ID	Yes	No	---
		6	Initial comm. characteristics	Yes	No	02 (hexadecimal)
		7	Produced connection size	Yes	No	See note.
		8	Consumed connection size	Yes	No	0800 (hexadecimal)
		9	Expected packet rate	Yes	Yes	
		12	Watchdog timeout action	Yes	No	00 (hexadecimal)
		13	Produced connection path length	Yes	No	See note.
		14	Produced connection path	Yes	No	See note.
		15	Consumed connection path length	Yes	No	0000
		16	Consumed connection path	Yes	No	See note.
	Service	**DeviceNet service**		**Parameter option**		
		05	Reset	None		
		0E	Get_Attribute_Single	None		
		10	Set_Attribute_Single	None		

Note See the following table.

Model	Name	Produced connection size	Produced connection path length	Produced connection path	Consumed connection path length	Consumed connection path
GRT1-DRT	Input Data	Variable	0006	20_04_24_05_30_03	0000	---
	Generic Status	0002	0006	20_04_24_64_30_03	0000	---
	Generic Status + Input Data	Variable	0006	20_04_24_66_30_03	0000	---

Object instance 4	Section	Information		Maximum number of instances		
	Instance type	COS Cyclic		1		
	Production trigger	Cyclic				
	Transport type	Server				
	Transport class	2				
	Attribute	**ID**	**Contents**	**Get (read)**	**Set (write)**	**Value**
		1	State	Yes	No	
		2	Instance type	Yes	No	01 (hexadecimal)
		3	Transport class trigger	Yes	No	12
		4	Produced connection ID	Yes	No	---
		5	Consumed connection ID	Yes	No	---
		6	Initial comm. characteristics	Yes	No	01 (hexadecimal)
		7	Produced connection size	Yes	No	See note.
		8	Consumed connection size	Yes	No	00 (hexadecimal)
		9	Expected packet rate	Yes	Yes	00
		12	Watchdog timeout action	Yes	No	00
		13	Produced connection path length	Yes	No	See note.
		14	Produced connection path	Yes	No	See note.
		15	Consumed connection path length	Yes	No	0004 (hexadecimal)
		16	Consumed connection path	Yes	No	202B2401
		17	Production inhibit time	Yes	No	0000 (hexadecimal)
	Service	**DeviceNet service**		**Parameter option**		
		05	Reset	None		
		0E	Get_Attribute_Single	None		
		10	Set_Attribute_Single	None		

Note See the following table.

Model	Name	Produced connection size	Produced connection path length	Produced connection path	Consumed connection path length	Consumed connection path
GRT1-DRT	Input Data	Variable	0006	20_04_24_05_30_03	0000	---
	Generic Status	0002	0006	20_04_24_64_30_03	0000	---
	Registered Flag + Abnormal Flag	0016	0006	20_04_24_64_30_03	0000	---
	Generic Status + Input Data	Variable	0006	20_04_24_66_30_03	0000	---

Appendix C
Standard Models

DeviceNet Communications Unit

Model	Specifications
GRT1-DRT	DeviceNet Communications Unit for Slice I/O Terminals Up to 64 Slice I/O Units can be connected to one DeviceNet Communications Unit.

Slice I/O Units

Model	Specifications
GRT1-ID4	Slice I/O Unit with 4 DC inputs (NPN)
GRT1-ID4-1	Slice I/O Unit with 4 DC inputs (PNP)
GRT1-OD4	Slice I/O Unit with 4 DC outputs (NPN)
GRT1-OD4-1	Slice I/O Unit with 4 DC outputs (PNP)
GRT1-ROS2	Slice I/O Unit with 2 relay outputs
GRT1-AD2	Slice I/O Unit with 2 analog inputs
GRT1-DA2V	Slice I/O Unit with 2 voltage analog outputs
GRT1-DA2C	Slice I/O Unit with 2 current analog outputs
GRT1-END	End Unit
GRT1-PD2	I/O Power Supply Unit
GRT1-TBR	Right Turnback Unit (Mounts to the right side of Slice I/O Terminal.)
GRT1-TBL	Left Turnback Unit (Mounts to the left side of Slice I/O Terminal. Can supply power to I/O Units.)

Connecting Cable for Slice I/O Terminal Turnback Units

Model	Specifications
GCN2-100	Turnback Cable (1 m) Up to two cables (two blocks) can be connected to one DeviceNet Communications Unit.

DeviceNet Communications Cables

Model	Specifications	Manufacturer
DCA2-5C10	Thick Cable: 5 wires, 100 m	OMRON
DCA1-5C10	Thin Cable: 5 wires, 100 m	OMRON
DVN18-10G	Thick Cable: 5 wires, 10 m	Nihon Wire & Cable (See note 1.)
DVN18-30G	Thick Cable: 5 wires, 30 m	Nihon Wire & Cable (See note 1.)
DVN18-50G	Thick Cable: 5 wires, 50 m	Nihon Wire & Cable (See note 1.)
DVN18-100G	Thick Cable: 5 wires, 100 m	Nihon Wire & Cable (See note 1.)
DVN18-300G	Thick Cable: 5 wires, 300 m	Nihon Wire & Cable (See note 1.)
DVN18-500G	Thick Cable: 5 wires, 500 m	Nihon Wire & Cable (See note 1.)
DVN24-10G	Thin Cable: 5 wires, 10 m	Nihon Wire & Cable (See note 1.)

Model	Specifications	Manufacturer
DVN24-30G	Thin Cable: 5 wires, 30 m	Nihon Wire & Cable (See note 1.)
DVN24-50G	Thin Cable: 5 wires, 50 m	Nihon Wire & Cable (See note 1.)
DVN24-100G	Thin Cable: 5 wires, 100 m	Nihon Wire & Cable (See note 1.)
DVN24-300G	Thin Cable: 5 wires, 300 m	Nihon Wire & Cable (See note 1.)
DVN24-500G	Thin Cable: 5 wires, 500 m	Nihon Wire & Cable (See note 1.)
1485C-P1-A50	Thick Cable: 5 wires, 50 m	Allen-Bradley (See note 2.)
1485C-P1-C150	Thin Cable: 5 wires, 150 m	Allen-Bradley (See note 2.)

Note 1. The cables made by Nihon Wire & Cable Company Ltd. Are sold through the OMRON 24 Service Co., Ltd. The product specifications are identical to the OMRON cable specifications.

2. The cables made by Allen-Bradley are stiffer than the cables made by OMRON and Nihon Wire & Cable Company Ltd., so do not bend the Allen-Bradley cables as much as the others.

DeviceNet Connectors

Model	Specifications	Manufacturer
XW4G-05C1-H1-D	For node connection Includes connector set screws	OMRON
XW4G-05C4-TF-D	For node connection (multi-drop wiring) Includes connector set screws	OMRON

DeviceNet Crimp Terminals for Communications Cables

PHOENIX CONTACT: AI Series and A1 Series

Cable type / Connector type		XW4B-05C1-H1-D XW4B-05C1-V1R-D	XW4G-05C1-H1-D XW4G-05C4-TF-D	Crimp tool
Thin Cable	Signal line	AI 0.25-6YE	AI 0.25-8YE	CRIMPFOX ZA3 or CRIMPFOX UD6
	Power line	AI 0.5-6WH	AI 0.5-10WH	
Thick Cable	Signal line	A1-6	A1-10	
	Power line	AI 2.5-8BU	AI 2.5-10BU	

Screwdrivers for Connectors

Model	Specifications	Manufacturer (Supplier)
XW4Z-00C	Special screwdriver for DeviceNet connectors	OMRON
SZF-1	Special screwdriver for DeviceNet connectors	OMRON 24 Service Co., Ltd.

DeviceNet Terminating Resistors

Model	Specifications	Manufacturer
DRS1-T	Terminal-block Terminating Resistor, 121 Ω	OMRON
DRS2-1	Shielded Terminating Resistor (male plug), micro-size	
DRS2-2	Shielded Terminating Resistor (female socket), micro-size	
DRS3-1	Shielded Terminating Resistor (male plug), mini-size	

Note A Terminating Resistor can also be connected to a T-branch Tap.

DeviceNet T-branch Taps

Model	Specifications	Manufacturer
DCN1-1C	Includes 3 connectors (When used on a trunk line, 1 branch line can be connected.) A Terminating Resistor can be connected.	OMRON
DCN1-3C	Includes 5 connectors (When used on a trunk line, 3 branch lines can be connected.) A Terminating Resistor can be connected.	OMRON

DeviceNet T-branch Connectors

Model	Specifications	Manufacturer
DCN2-1	Shielded T-branch Connector (for 1 branch line)	OMRON

DeviceNet Power Supply Sharing Taps

Model	Specifications	Manufacturer
1485T-P2T5-T5	Required when connecting more than one power supply. Reverse current prevention, ground terminal provided.	Allen-Bradley
DCN1-1P	One-branch tap for power supply. Use this tap when connecting a communications power supply. Two connectors and two fuses are standard.	OMRON

Note The Power Supply Sharing Taps are sold through the OMRON 24 Service Co., Ltd.

Applicable Pin Terminals

Manufacturer	Model	
PHOENIX CONTACT	AI-0.5-10	0.5 mm^2 (AWG 20)
	AI-0.75-10	0.75 mm^2 (AWG 18)
	AI-1.5-10	1.25 mm^2 (AWG 16)
Nihon Weidmuller	H 0.5/16 D	0.5 mm^2 (AWG 20)
	H 0.75/16 D	0.75 mm^2 (AWG 18)
	H 1.5/16 D	1.25 mm^2 (AWG 16)

Appendix D

Power Consumption Tables

DeviceNet Communications Unit

Model	Power supply power consumption	Weight
GRT1-DRT	3 W	137 g

Slice I/O Units

Model	Power supply power consumption	Weight
GRT1-ID4	1 W	76 g
GRT1-ID4-1	1 W	76 g
GRT1-OD4	1 W	76 g
GRT1-OD4-1	1 W	76 g
GRT1-ROS2	1 W	80 g
GRT1-AD2	1.5 W	82 g
GRT1-DA2V	1.5 W	82 g
GRT1-DA2C	2 W	82 g
GRT1-END	0	49 g
GRT1-PD2	0.2 W	72 g
GRT1-TBR	0	56 g
GRT1-TBL	0	108 g

Appendix E

I/O Current Consumption

Model	Current consumption
GRT1-ID4	33 mA
GRT1-ID4-1	33 mA
GRT1-OD4	12 mA
GRT1-OD4-1	12 mA
GRT1-ROS2	30 mA
GRT1-AD2	0 mA
GRT1-DA2V	0 mA
GRT1-DA2C	0 mA
GRT1-END	0 mA
GRT1-PD2	4 mA
GRT1-TBR	0 mA
GRT1-TBL	4 mA

Glossary

The following table provides a list of commonly used DeviceNet terms.

Term	Explanation
Bus OFF	Indicates that the error rate in the network is extremely high. Errors are detected when a fixed threshold is exceeded by the internal error counter. (The internal error counter is cleared when the Master Unit is started or restarted.)
CAN	CAN is short for Controller Area Network. It is a communications protocol developed as a LAN for use in automobiles. DeviceNet employs CAN technology.
Configurator	A device for setting the system settings. The Configurator can read ID information, read and write parameters, and display the network configuration. OMRON's DeviceNet Configurator is designed for use with an OMRON Master Unit.
Consumed Connection Size	Indicates the data size (byte length) received via the connection.
ODVA	ODVA is short for Open DeviceNet Vendors Association, Inc. It is a non-profit organization formed by machine vendors with the aim to administer and popularize the DeviceNet specification.
Produced Connection Size	Indicates the data size (byte length) sent via the connection.
Connection	This is a logical communications channel for facilitating communications between nodes. Communications are maintained and managed between the master and slaves.
Device Profile	Standardizes the configuration and behavior (the smallest data configuration and operation that must be supported by the devices) of devices of the same type. Provides mutual exchangeability between devices of the same type. Also known as a device model. Devices for which device profiles are currently being studied include sensors, valves, display units, and encoders.
Master/Slave	A node can be either a master, which collects and distributes data, or a slave, which outputs and inputs data according to the instructions received from the master. OMRON's DeviceNet products are already provided with either master or slave functions in a predefined master/slave connection set.

Index

C

cables
  communications cables, xix
    models, 91
  precautions, xviii, xix
changing present values, xvii
circuits
  precautions, xviii
comments
  Slave comments, 32
communications
  errors
    history monitor, 34
  starting, 57
Configurator
  reading communications error history, 34
  writing maintenance dates, 37
connectors
  models, 92
  precautions, xviii
crimp terminals, xviii
  models, 92

D

DeviceNet
  explicit messages, 77

E

EC Directives, xix
Environment-resistive Slaves
  precautions, xvii

F

FALS instruction, xvi
fixed I/O allocations
  precautions, 59

G

General-purpose Slaves
  precautions, xvii
grounding
  precautions, xviii

I

I/O tables
  for Masters, 57
indicators
  status, 60

M

maintenance, 37
  writing maintenance dates, 37

N

Network Power Voltage Error Flag, 29

O

outputs
  precautions, xvii

P

packing
  precautions, xix
power supply
  communications power supply, xviii
  network voltage monitor, 29
  precautions, xviii
Power Supply Sharing Taps
  models, 93
precautions
  application, xviii
  cables, xviii, xix
  circuits, xviii
  connectors, xviii
  EC Directives, xix
  environment, xvii
  general, xvi
  grounding, xviii
  packing, xix
  power supply, xviii
  safety, xvi
  scan list, xix
  switches, xviii
  wiring, xviii
Programming Console
  creating I/O tables, 58

R

refreshing
  data, xvii

S

scan lists
  creating, 58
  precautions, xix
  registering, 59
screwdrivers
  models, 93
slave comments, 32
switches
  rotary switches
    precautions, xviii
  software switches, 59

T

T-branch Connectors
  models, 93
T-branch Taps
  models, 93
Terminating Resistors
  models, 93
transferring I/O memory data, xvii
transferring I/O memory files, xvii

U

Unit Maintenance Flag, 30
user I/O allocations
  precautions, 59

W

wiring
  precautions, xviii

Revision History

A manual revision code appears as a suffix to the catalog number on the front cover of the manual.

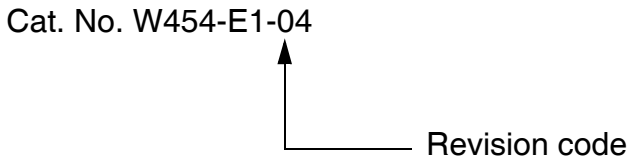

The following table outlines the changes made to the manual during each revision. Page numbers refer to the previous version.

Revision code	Date	Revised content
01	November 2005	Original production
02	May 2006	**Page xx:** Addition made to item 2 at the top of the page. **Page 2:** Callout for Slice I/O Unit changed. **Page 4:** Callouts in System Configuration changed. **Page 4:** Communications distance deleted from the Communications Specifications table. **Pages 5:** Number of I/O points clarified in table. **Page 6:** Entry for the connector and power consumption per block changed in and two rows added to table. **Page 6:** Slice I/O Units added to the Available Units table. **Page 10:** Dimensions graphic replaced. **Page 21:** Table changed. **Page 26:** Note 2 changed. **Page 45:** Tables moved to appendix, text adjusted accordingly, and note 2 changed. **Page 46:** Callout regarding power supply added to the Wiring Example diagram. **Page 47:** Model numbers for recommended power supply changed. **Page 50:** First paragraph in section 3-4-1 changed. **Pages 65 and 66:** Corrected Multiple I/O Terminal processing time to Smart-Slice processing time. **Page 76:** Left cells in third and fourth rows of table in section 6-4 changed. **Page 83:** Corrected Contents (Hex) for D0001 under Contents of C from 00 09 to 00 0C. **Page 93:** Slice I/O Units added to table. **Page 97:** Two appendices added.
03	April 2008	**Page 6:** Added accessories row to table. **Page 49:** Added information on connectors and deleted precautions section. **Page 56:** Deleted model number and illustration from note. **Page 80:** Changed size of reponse. **Page 94:** Changed table of Phoenix Contact products.
04	December 2017	Corrected mistakes. **Page 30:** Added description on Unit Conduction Time.

OMRON Corporation **Industrial Automation Company**
Kyoto, JAPAN
Contact: www.ia.omron.com

Regional Headquarters
OMRON EUROPE B.V.
Wegalaan 67-69, 2132 JD Hoofddorp
The Netherlands
Tel: (31)2356-81-300/Fax: (31)2356-81-388

OMRON ELECTRONICS LLC
2895 Greenspoint Parkway, Suite 200
Hoffman Estates, IL 60169 U.S.A.
Tel: (1) 847-843-7900/Fax: (1) 847-843-7787

OMRON ASIA PACIFIC PTE. LTD.
No. 438A Alexandra Road # 05-05/08 (Lobby 2),
Alexandra Technopark,
Singapore 119967
Tel: (65) 6835-3011/Fax: (65) 6835-2711

OMRON (CHINA) CO., LTD.
Room 2211, Bank of China Tower,
200 Yin Cheng Zhong Road,
PuDong New Area, Shanghai, 200120, China
Tel: (86) 21-5037-2222/Fax: (86) 21-5037-2200

Authorized Distributor:

© OMRON Corporation 2005-2017 All Rights Reserved.
In the interest of product improvement,
specifications are subject to change without notice.

Cat. No. W454-E1-04 1217