Cat. No. W421-E1-04

生産終了
DISCONTINUED

SYSMAC CS and CJ Series CS1W-ETN21 (100Base-TX) CJ1W-ETN21 (100Base-TX)

Ethernet Units Construction of Applications

OPERATION MANUAL

OMRON

CS1W-ETN21 (100Base-TX)
CJ1W-ETN21 (100Base-TX)
Ethernet Units
Construction of Applications

Operation Manual

Revised April 2009

Notice:

OMRON products are manufactured for use according to proper procedures by a qualified operator and only for the purposes described in this manual.

The following conventions are used to indicate and classify precautions in this manual. Always heed the information provided with them. Failure to heed precautions can result in injury to people or damage to property.

⚠ DANGER Indicates an imminently hazardous situation which, if not avoided, will result in death or serious injury. Additionally, there may be severe property damage.

⚠ WARNING Indicates a potentially hazardous situation which, if not avoided, could result in death or serious injury. Additionally, there may be severe property damage.

⚠ Caution Indicates a potentially hazardous situation which, if not avoided, may result in minor or moderate injury, or property damage.

OMRON Product References

All OMRON products are capitalized in this manual. The word “Unit” is also capitalized when it refers to an OMRON product, regardless of whether or not it appears in the proper name of the product.

The abbreviation “Ch,” which appears in some displays and on some OMRON products, often means “word” and is abbreviated “Wd” in documentation in this sense.

The abbreviation “PLC” means Programmable Controller. “PC” is used, however, in some Programming Device displays to mean Programmable Controller.

Visual Aids

The following headings appear in the left column of the manual to help you locate different types of information.

Note Indicates information of particular interest for efficient and convenient operation of the product.

1,2,3... 1. Indicates lists of one sort or another, such as procedures, checklists, etc.

© OMRON, 2003

All rights reserved. No part of this publication may be reproduced, stored in a retrieval system, or transmitted, in any form, or by any means, mechanical, electronic, photocopying, recording, or otherwise, without the prior written permission of OMRON.

No patent liability is assumed with respect to the use of the information contained herein. Moreover, because OMRON is constantly striving to improve its high-quality products, the information contained in this manual is subject to change without notice. Every precaution has been taken in the preparation of this manual. Nevertheless, OMRON assumes no responsibility for errors or omissions. Neither is any liability assumed for damages resulting from the use of the information contained in this publication.

TABLE OF CONTENTS

PRECAUTIONS xxi

1 Intended Audience xxii
2 General Precautions xxii
3 Safety Precautions xxii
4 Operating Environment Precautions xxiv
5 Application Precautions xxiv
6 Conformance to EC Directives xxvi

SECTION 1
Introduction 1

1-1 Ethernet Unit Communications Services 2
1-2 Functions Listed by Purpose 2
1-3 Table of Protocols 3
1-4 Common Protocol Settings 4

SECTION 2
Mail Send Function 9

2-1 Mail Send Function Overview 10
2-2 Mail Send Function Details 11
2-3 Mail Send Function Specifications 17
2-4 Using the Mail Send Function 18
2-5 Mail Send Function Status 25
2-6 I/O Memory Data Formats 26
2-7 Attached File Transfer Times 28
2-8 Mail Send Function Errors 28
2-9 Example Application 30

SECTION 3
Receive Mail Function 33

3-1 Mail Receive Function Overview 34
3-2 Mail Receive Function Specifications 36
3-3 Using the Mail Receive Function 38
3-4 Remote Mail Command Details 42
3-5 Mail Receive Function Status 60
3-6 I/O Memory Data Formats 60
3-7 Attached File Transfer Times 62
3-8 Mail Receive Function Errors 63
3-9 Example Application 65

TABLE OF CONTENTS

SECTION 4
FTP Server 67

4-1 Overview 68
4-2 FTP Server Function Details 69
4-3 Using the FTP Server Function 70
4-4 FTP Server Application Example 72
4-5 Using FTP Commands. 73
4-6 Checking FTP Status 79
4-7 Using File Memory 80
4-8 FTP File Transfer Time 85
4-9 UNIX Application Example 86

SECTION 5
Automatic Clock Adjustment Function 89

5-1 Overview 90
5-2 Using the Automatic Clock Adjustment Function 91
5-3 Automatic Clock Adjustment Switch 94
5-4 Automatic Clock Adjustment Error Processing 94

SECTION 6
Socket Services 97

6-1 Overview of Socket Communications from Ethernet Units 99
6-2 Protocol Overview 100
6-3 Overview 103
6-4 Socket Service Function Guide 106
6-5 Using Socket Service Functions 107
6-6 Socket Service Status. 110
6-7 Using Socket Services by Manipulating Dedicated Control Bits 113
6-8 Using Socket Services with CMND(490) 135
6-9 Precautions in Using Socket Services 154

SECTION 7
Using FINS Communications to Create Host Applications 159

7-1 Overview of FINS Communications 160
7-2 FINS Frames 162
7-3 FINS/UDP Method 163
7-4 FINS/TCP Method. 171
7-5 Maximum Transmission Delays: Writing/Reading to CPU Unit 192

TABLE OF CONTENTS

Appendices

A Ethernet Network Parameters 195
B Buffer Configuration 197
C TCP Status Transitions 199
D ASCII Characters 201
E Maintenance 203
F Inspections 205

Index. 207

Revision History 215

About this Manual:

This manual describes the operation of the CS1W-ETN21 and CJ1W-ETN21 Ethernet Units (100Base-TX) for constructing applications and includes the sections described below.

Please read this manual carefully and be sure you understand the information provided before attempting to install or operate the Ethernet Unit. Be sure to read the precautions provided in the following section.

Precautions

Section 1 introduces the Ethernet Unit's communications services, including information on functions and protocols.

Section 2 describes how to use the Ethernet Unit's Mail Send Function, including specifications, status details, application examples, and troubleshooting information.

Section 3 describes how to use the Ethernet Unit's Mail Receive Function, including specifications, status details, I/O memory data formats, file transfer timing, application examples, and troubleshooting information.

Section 4 describes the functions provided by the FTP server.

Section 5 provides an overview of the automatic clock adjustment function, including details on specifications, required settings, operations from CX-Programmer, and troubleshooting.

Section 6 describes the functionality provided by the Ethernet Unit via the socket services.

Section 7 provides information on communicating on Ethernet Systems and interconnected networks using FINS commands. The information provided in the section deals only with FINS communications in reference to Ethernet Units.

Appendices provide information on Ethernet network parameters, the buffer configuration, TCP status transitions, ASCII characters, maintenance, and inspections.

The related *Operation Manual Construction of Networks* (W420) provides the following information.

Section	Contents
Section 1	Overview of Ethernet Unit features, specifications, and description of the Unit parts and system configuration for constructing Networks.
Section 2	Information on Ethernet Unit's installation and initial settings required for operation.
Section 3	Information on setting communications using CX-Programmer.
Section 4	Information on words allocated in the CIO Area and DM Area for Ethernet Units.
Section 5	Information on how to manage and use IP addresses.
Section 6	Information on communicating on Ethernet Systems and interconnected networks using FINS commands.
Section 7	Information on the FINS commands that can be sent to an Ethernet Unit and the responses that are returned by the Ethernet Unit.
Section 8	Information on troubleshooting.

Relevant Manuals

The following table lists CS- and CJ-series manuals that contain information relevant to Ethernet Units.

Manual number	Model	Name	Contents
W420	CS1W-ETN21 CJ1W-ETN21	Ethernet Units Operation Manual Construction of Networks	Provides information on operating and installing 100Base-TX Ethernet Units, including details on basic settings and FINS communications. Refer to the *Communications Commands Reference Manual* (W342) for details on FINS commands that can be sent to CS-series and CJ-series CPU Units when using the FINS communications service.
W421	CS1W-ETN21 CJ1W-ETN21	Ethernet Units Operation Manual Construction of Applications (this manual)	Provides information on constructing host applications for 100Base-TX Ethernet Units, including functions for sending/receiving mail, socket service, automatic clock adjustment, FTP server functions, and FINS communications.
W343	CS1W-ETN01 CS1W-ETN11 CJ1W-ETN11	Ethernet Units Operation Manual	Describes the installation and operation of the 10Base-5 and 10Base-T Ethernet Units.
W342	CS1G/H-CPU□□H CS1G/H-CPU-□□V1 CS1W-SCU21 CS1W-SCB21/41 CJ1G/H-CPU□□H CJ1G-CPU□□ CJ1W-SCU41	Communications Commands Reference Manual	Describes the C-series (Host Link) and FINS communications commands used when sending communications commands to CS-series and CJ-series CPU Units.
W339	CS1G/H-CPU□□H CS1G/H-CPU-□□V1	Programmable Controllers Operation Manual	Provides an outline of, and describes the design, installation, maintenance, and other basic operations for the CS-series PLCs. Information is also included on features, system configuration, wiring, I/O memory allocations, and troubleshooting. Use together with the *Programmable Controllers Programming Manual* (W394).
W393	CJ1G/H-CPU□□H CJ1G-CPU□□	Programmable Controllers Operation Manual	Provides an outline of, and describes the design, installation, maintenance, and other basic operations for the CJ-series PLCs. Information is also included on features, system configuration, wiring, I/O memory allocations, and troubleshooting. Use together with the *Programmable Controllers Programming Manual* (W394).
W394	CS1G/H-CPU□□H CS1G/H-CPU-□□V1 CJ1G/H-CPU□□H CJ1G-CPU□□	Programmable Controllers Programming Manual	Describes programming, tasks, file memory, and other functions for the CS-series and CJ-series PLCs. Use together with the *Programmable Controllers Operation Manual* (W339 for CS-series PLCs and W393 for CJ-series PLCs).
W340	CS1G/H-CPU□□H CS1G/H-CPU-□□V1 CJ1G/H-CPU□□H CJ1G-CPU□□	Programmable Controllers Instructions Reference Manual	Describes the ladder diagram programming instructions supported by CS-series and CJ-series PCs. Use together with the *Programmable Controllers Operation Manual* (W339 for CS-series PLCs and W393 for CJ-series PLCs), and *Programmable Controllers Programming Manual* (W394).

Manual number	Model	Name	Contents
W414	WS02-CX-□□JV3	CX-Programmer Ver.3.□ Operation Manual	Provides information on how to use the CX-Programmer, a Windows-based programming device, and CX-Net, a Windows-based network configuration tool. Use together with the *Programmable Controllers Operation Manual* (W339 for CS-series PLCs and W393 for CJ-series PLCs), *Programmable Controllers Programming Manual* (W394) and the *Programmable Controllers Instructions Reference Manual* (W340) to perform programming.
W341	CQM1H-PRO01 CQM1-PRO01 C200H-PRO27 + CS1W-KS001	Programming Consoles Operation Manual	Provides information on how to operate the Programming Console. Use together with the *Programmable Controllers Operation Manual* (W339 for CS-series PLCs and W393 for CJ-series PLCs), *Programmable Controllers Programming Manual* (W394) and the *Programmable Controllers Instructions Reference Manual* (W340) to perform programming.
W336	CS1W-SCB21/41 CS1W-SCU21 CJ1W-SCU41	Serial Communications Boards and Serial Communications Units Operation Manual	Accessing the PLC connected to the CX-Programmer via Ethernet or the host computer or other device connected to the Serial Communications Board or Unit. Describes the use of Serial Communications Units and Boards, including details on hardware, software, and standard system protocols.
W464	CXONE-AL□□C-V3 CXONE-AL□□D-V3	CX-Integrator Operation Manual	Describes CX-Integrator operating methods, e.g., for setting up and monitoring networks.
W463	CXONE-AL□□C-V3 CXONE-AL□□D-V3	CX-One Setup Manual	Describes installation and provides an overview of the CX-One FA Integrated Tool Package.

⚠ WARNING Failure to read and understand the information provided in this manual may result in personal injury or death, damage to the product, or product failure. Please read each section in its entirety and be sure you understand the information provided in the section and related sections before attempting any of the procedures or operations given.

Read and Understand this Manual

Please read and understand this manual before using the product. Please consult your OMRON representative if you have any questions or comments.

Warranty and Limitations of Liability

WARRANTY
OMRON's exclusive warranty is that the products are free from defects in materials and workmanship for a period of one year (or other period if specified) from date of sale by OMRON. OMRON MAKES NO WARRANTY OR REPRESENTATION, EXPRESS OR IMPLIED, REGARDING NON-INFRINGEMENT, MERCHANTABILITY, OR FITNESS FOR PARTICULAR PURPOSE OF THE PRODUCTS. ANY BUYER OR USER ACKNOWLEDGES THAT THE BUYER OR USER ALONE HAS DETERMINED THAT THE PRODUCTS WILL SUITABLY MEET THE REQUIREMENTS OF THEIR INTENDED USE. OMRON DISCLAIMS ALL OTHER WARRANTIES, EXPRESS OR IMPLIED.

LIMITATIONS OF LIABILITY
OMRON SHALL NOT BE RESPONSIBLE FOR SPECIAL, INDIRECT, OR CONSEQUENTIAL DAMAGES, LOSS OF PROFITS OR COMMERCIAL LOSS IN ANY WAY CONNECTED WITH THE PRODUCTS, WHETHER SUCH CLAIM IS BASED ON CONTRACT, WARRANTY, NEGLIGENCE, OR STRICT LIABILITY. In no event shall the responsibility of OMRON for any act exceed the individual price of the product on which liability is asserted. IN NO EVENT SHALL OMRON BE RESPONSIBLE FOR WARRANTY, REPAIR, OR OTHER CLAIMS REGARDING THE PRODUCTS UNLESS OMRON'S ANALYSIS CONFIRMS THAT THE PRODUCTS WERE PROPERLY HANDLED, STORED, INSTALLED, AND MAINTAINED AND NOT SUBJECT TO CONTAMINATION, ABUSE, MISUSE, OR INAPPROPRIATE MODIFICATION OR REPAIR.

Application Considerations

SUITABILITY FOR USE

OMRON shall not be responsible for conformity with any standards, codes, or regulations that apply to the combination of products in the customer's application or use of the products.

At the customer's request, OMRON will provide applicable third party certification documents identifying ratings and limitations of use that apply to the products. This information by itself is not sufficient for a complete determination of the suitability of the products in combination with the end product, machine, system, or other application or use.

The following are some examples of applications for which particular attention must be given. This is not intended to be an exhaustive list of all possible uses of the products, nor is it intended to imply that the uses listed may be suitable for the products:

- Outdoor use, uses involving potential chemical contamination or electrical interference, or conditions or uses not described in this manual.
- Nuclear energy control systems, combustion systems, railroad systems, aviation systems, medical equipment, amusement machines, vehicles, safety equipment, and installations subject to separate industry or government regulations.
- Systems, machines, and equipment that could present a risk to life or property.

Please know and observe all prohibitions of use applicable to the products.

NEVER USE THE PRODUCTS FOR AN APPLICATION INVOLVING SERIOUS RISK TO LIFE OR PROPERTY WITHOUT ENSURING THAT THE SYSTEM AS A WHOLE HAS BEEN DESIGNED TO ADDRESS THE RISKS, AND THAT THE OMRON PRODUCTS ARE PROPERLY RATED AND INSTALLED FOR THE INTENDED USE WITHIN THE OVERALL EQUIPMENT OR SYSTEM.

PROGRAMMABLE PRODUCTS

OMRON shall not be responsible for the user's programming of a programmable product, or any consequence thereof.

Disclaimers

CHANGE IN SPECIFICATIONS

Product specifications and accessories may be changed at any time based on improvements and other reasons.

It is our practice to change model numbers when published ratings or features are changed, or when significant construction changes are made. However, some specifications of the products may be changed without any notice. When in doubt, special model numbers may be assigned to fix or establish key specifications for your application on your request. Please consult with your OMRON representative at any time to confirm actual specifications of purchased products.

DIMENSIONS AND WEIGHTS

Dimensions and weights are nominal and are not to be used for manufacturing purposes, even when tolerances are shown.

PERFORMANCE DATA

Performance data given in this manual is provided as a guide for the user in determining suitability and does not constitute a warranty. It may represent the result of OMRON's test conditions, and the users must correlate it to actual application requirements. Actual performance is subject to the OMRON Warranty and Limitations of Liability.

ERRORS AND OMISSIONS

The information in this manual has been carefully checked and is believed to be accurate; however, no responsibility is assumed for clerical, typographical, or proofreading errors, or omissions.

Unit Versions of CS/CJ-series

Unit Versions

A “unit version” has been introduced to manage Units in the CS/CJ Series according to differences in functionality accompanying Unit upgrades.

Notation of Unit Versions on Products

The unit version is given to the right of the lot number on the nameplate of the products for which unit versions are being managed, as shown below.

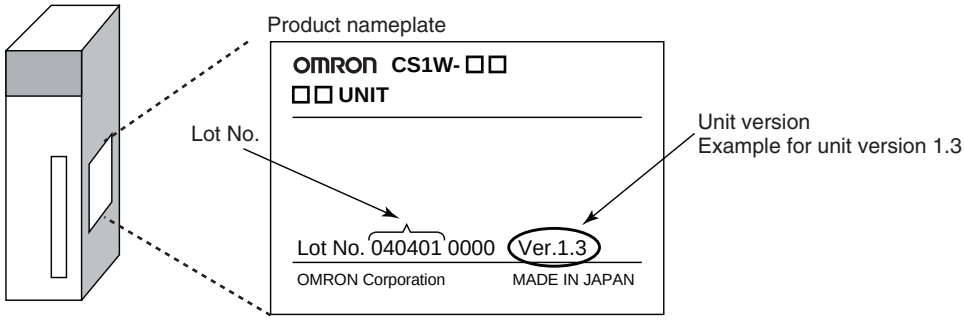

Confirming Unit Versions with Support Software

CX-Programmer version 4.0 can be used to confirm the unit version using the ***Unit Manufacturing Information***.

Note The unit versions of Pre-Ver.2.0 Units cannot be confirmed in ***Unit Manufacturing Information***. The following dialog box is displayed.

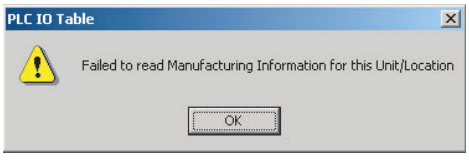

In the *IO Table* Window, right-click and select ***Unit Manufacturing information - CPU Unit.***

The following *Unit Manufacturing information* Dialog Box will be displayed.

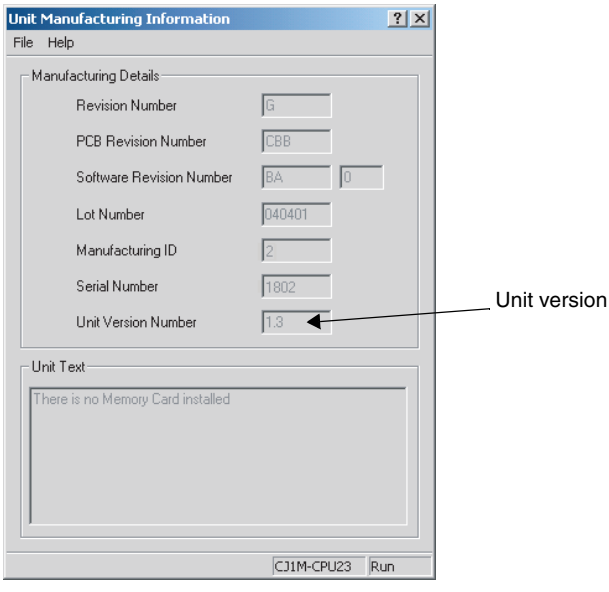

Use the above display to confirm the unit version of the Unit connected online.

Using Unit Version Label

The following unit version label is provided with the Ethernet Unit.

This label can be attached to the front of the Ethernet Unit to differentiate between Ethernet Units with different unit versions.

Unit Version Notation

In this manual, the unit version of a Ethernet Unit is given as shown in the following table.

Product nameplate	Notation used in this manual	Special remarks
Ver. 1.3 or later number shown to right of the lot number	Ethernet Unit Ver. 1.3 or later	Information without reference to specific Unit Versions applies to all versions of the Unit.
Blank to the right of lot number	Pre-Ver. 1.3 Ethernet Units	

Unit Versions and Lot Numbers

Type	Model		Date of manufacture	
			March 2003 or earlier	April 2004 or later
Special I/O Unit	Ethernet Unit	CS1W-ETN21 CJ1W-ETN21	No version code	Unit Ver. 1.3 (Lot No.: 040401)
Supported Software	CX-Programmer	WS02-CXPC1-JV□	**Ver. 3.3 or earlier**	Ver. 4.0

PRECAUTIONS

This section provides general precautions for using the CS1W-ETN21 and CJ1W-ETN21 Ethernet Units (100Base-TX).

The information contained in this section is important for the safe and reliable application of Ethernet Units. You must read this section and understand the information contained before attempting to set up or operate an Ethernet Unit.

1 Intended Audience xxii
2 General Precautions xxii
3 Safety Precautions xxii
4 Operating Environment Precautions xxiv
5 Application Precautions xxiv
6 Conformance to EC Directives xxvi
6-1 Applicable Directives xxvi
6-2 Concepts xxvi

1 Intended Audience

This manual is intended for the following personnel, who must also have knowledge of electrical systems (an electrical engineer or the equivalent).

- Personnel in charge of installing FA systems.
- Personnel in charge of designing FA systems.
- Personnel in charge of managing FA systems and facilities.

2 General Precautions

The user must operate the product according to the performance specifications described in the operation manuals.

Before using the product under conditions which are not described in the manual or applying the product to nuclear control systems, railroad systems, aviation systems, vehicles, combustion systems, medical equipment, amusement machines, safety equipment, and other systems, machines, and equipment that may have a serious influence on lives and property if used improperly, consult your OMRON representative.

Make sure that the ratings and performance characteristics of the product are sufficient for the systems, machines, and equipment, and be sure to provide the systems, machines, and equipment with double safety mechanisms.

This manual provides information for programming and operating the Unit. Be sure to read this manual before attempting to use the Unit and keep this manual close at hand for reference during operation.

⚠ **WARNING** It is extremely important that a PLC and all PLC Units be used for the specified purpose and under the specified conditions, especially in applications that can directly or indirectly affect human life. You must consult with your OMRON representative before applying a PLC System to the above-mentioned applications.

3 Safety Precautions

⚠ **WARNING** Do not attempt to take any Unit apart while the power is being supplied. Doing so may result in electric shock.

⚠ **WARNING** Do not touch any of the terminals or terminal blocks while the power is being supplied. Doing so may result in electric shock.

⚠ **WARNING** Do not attempt to disassemble, repair, or modify any Units. Any attempt to do so may result in malfunction, fire, or electric shock.

⚠ **WARNING** Provide safety measures in external circuits (i.e., not in the Programmable Controller), including the following items, to ensure safety in the system if an abnormality occurs due to malfunction of the PLC or another external factor affecting the PLC operation. Not doing so may result in serious accidents.

- Emergency stop circuits, interlock circuits, limit circuits, and similar safety measures must be provided in external control circuits.
- The PLC will turn OFF all outputs when its self-diagnosis function detects any error or when a severe failure alarm (FALS) instruction is executed. As a countermeasure for such errors, external safety measures must be provided to ensure safety in the system.
- The PLC outputs may remain ON or OFF due to deposits on or burning of the output relays, or destruction of the output transistors. As a countermeasure for such problems, external safety measures must be provided to ensure safety in the system.
- When the 24-V DC output (service power supply to the PLC) is overloaded or short-circuited, the voltage may drop and result in the outputs being turned OFF. As a countermeasure for such problems, external safety measures must be provided to ensure safety in the system.

⚠ **Caution** Execute online editing only after confirming that no adverse effects will be caused by extending the cycle time. Otherwise, the input signals may not be readable.

- Emergency stop circuits, interlock circuits, limit circuits, and similar safety measures must be provided in external control circuits.

⚠ **Caution** Fail-safe measures must be taken by the customer to ensure safety in the event of incorrect, missing, or abnormal signals caused by broken signal lines, momentary power interruptions, or other causes. Serious accidents may result from abnormal operation if proper measures are not provided.

⚠ **Caution** Confirm safety at the destination node before changing or transferring to another node the contents of a program, the PLC Setup, I/O tables, or I/O memory. Changing or transferring any of these without confirming safety may result in injury.

⚠ **Caution** Tighten the screws on the terminal block of the AC Power Supply Unit to the torque specified in the operation manual. The loose screws may result in burning or malfunction.

4 Operating Environment Precautions

⚠ **Caution** Do not operate the control system in the following locations:

- Locations subject to direct sunlight.
- Locations subject to temperatures or humidity outside the range specified in the specifications.
- Locations subject to condensation as the result of severe changes in temperature.
- Locations subject to corrosive or flammable gases.
- Locations subject to dust (especially iron dust) or salts.
- Locations subject to exposure to water, oil, or chemicals.
- Locations subject to shock or vibration.

⚠ **Caution** Take appropriate and sufficient countermeasures when installing systems in the following locations:

- Locations subject to static electricity or other forms of noise.
- Locations subject to strong electromagnetic fields.
- Locations subject to possible exposure to radioactivity.
- Locations close to power supplies.

5 Application Precautions

Observe the following precautions when using the Ethernet Unit.

⚠ **WARNING** Always heed these precautions. Failure to abide by the following precautions could lead to serious or possibly fatal injury.

- Always connect to a ground of 100 Ω or less when installing the Units. Not connecting to a ground of 100 Ω or less may result in electric shock.
- Always turn OFF the power supply to the CPU Unit and Slaves before attempting any of the following. Not turning OFF the power supply may result in malfunction or electric shock.
  - Mounting or dismounting I/O Units, CPU Units, Memory Packs, or Master Units.
  - Assembling the Units.
  - Setting DIP switches or rotary switches.
  - Connecting cables or wiring the system.
  - Connecting or disconnecting the connectors.

⚠ **Caution** Failure to abide by the following precautions could lead to faulty operation of the Ethernet Unit or the system, or could damage the Ethernet Unit. Always heed these precautions.

- Interlock circuits, limit circuits, and similar safety measures in external circuits (i.e., not in the Programmable Controller) must be provided by the customer.

- Always use the power supply voltages specified in the operation manuals. An incorrect voltage may result in malfunction or burning.
- Take appropriate measures to ensure that the specified power with the rated voltage and frequency is supplied. Be particularly careful in places where the power supply is unstable. An incorrect power supply may result in malfunction.
- Install external breakers and take other safety measures against short-circuiting in external wiring. Insufficient safety measures
- Make sure that all the Backplane mounting screws, terminal block screws, and cable connector screws are tightened to the torque specified in the relevant manuals. Incorrect tightening torque may result in malfunction.
- Leave the label attached to the Unit when wiring. Removing the label may result in malfunction if foreign matter enters the Unit.
- Remove the label after the completion of wiring to ensure proper heat dissipation. Leaving the label attached may result in malfunction.
- Use crimp terminals for wiring. Do not connect bare stranded wires directly to terminals. Connection of bare stranded wires may result in burning.
- Observe the following precautions when wiring the communications cable.
  - Separate the communications cables from the power lines or high-voltage lines.
  - Do not bend the communications cables past their natural bending radius.
  - Do not pull on the communications cables.
  - Do not place heavy objects on top of the communications cables.
  - Always lay communications cable inside ducts.
  - Use appropriate communications cables.
- Make sure that the terminal blocks, expansion cable connectors, and other items with locking devices are locked in place.
- Wire all connections correctly according to instructions in this manual.
- Double-check all wiring and switch settings before turning ON the power supply. Incorrect wiring may result in burning.
- Mount Units only after checking terminal blocks and connectors completely.
- Check the user program for proper execution before actually running it on the Unit. Not checking the program may result in unexpected operation.
- Confirm that no adverse effect will occur in the system before attempting any of the following. Not doing so may result in an unexpected operation.
  - Changing the operating mode of the PLC.
  - Force-setting/force-resetting any bit in memory.
  - Changing the present value of any word or any set value in memory.
- After replacing Units, resume operation only after transferring to the new CPU Unit and/or Special I/O Units the contents of the DM Area, HR Area, programs, parameters, and other data required for resuming operation. Not doing so may result in an unexpected operation.
- Before touching a Unit, be sure to first touch a grounded metallic object in order to discharge any static build-up. Not doing so may result in malfunction or damage.

- When transporting the Unit, use special packing boxes and protect it from being exposed to excessive vibration or impacts during transportation.
- CPU Bus Units will be restarted when routing tables are transferred from a Programming Device to the CPU Unit. Restarting these Units is required to read and enable the new routing tables. Confirm that the system will not be adversely affected before allowing the CPU Bus Units to be reset.

6 Conformance to EC Directives

6-1 Applicable Directives

- EMC Directives
- Low Voltage Directive

6-2 Concepts

EMC Directives

OMRON devices that comply with EC Directives also conform to the related EMC standards so that they can be more easily built into other devices or the overall machine. The actual products have been checked for conformity to EMC standards (see the following note). Whether the products conform to the standards in the system used by the customer, however, must be checked by the customer.

EMC-related performance of the OMRON devices that comply with EC Directives will vary depending on the configuration, wiring, and other conditions of the equipment or control panel on which the OMRON devices are installed. The customer must, therefore, perform the final check to confirm that devices and the overall machine conform to EMC standards.

Note Applicable EMS (Electromagnetic Susceptibility) and EMI (Electromagnetic Interference) Standards in the EMC (Electromagnetic Compatibility) standards are as follows:

Ethernet Unit	EMS	EMI
CS1W-ETN21	EN61000-6-2	EN61000-6-4 (Radiated emission: 10-m regulations)
CJ1W-ETN21		

Low Voltage Directive

Always ensure that devices operating at voltages of 50 to 1,000 V AC and 75 to 1,500 V DC meet the required safety standards for the PLC (EN61131-2).

SECTION 1
Introduction

This section introduces the functions and protocols used in Ethernet Unit communications services.

1-1 Ethernet Unit Communications Services 2
1-2 Functions Listed by Purpose 2
1-3 Table of Protocols 3
1-4 Common Protocol Settings 4
1-4-1 SMTP 4
1-4-2 POP 5
1-4-3 DNS 7

1-1 Ethernet Unit Communications Services

Service	Main functions		Counterpart device	Reference
Mail send function	Through intranet or internet	Used to e-mail specified I/O memory data or a file (up to 1 MB) from the PLC to the computer automatically when a preset condition is met.	Computer (E-mail software)	*SECTION 2 Mail Send Function*
Mail receive function		Used to perform operations in the PLC from the computer, such as reading or writing I/O memory data, backing up data, changing the operating mode, or transferring files (up to 1 MB).	Computer (E-mail software)	*SECTION 3 Receive Mail Function*
FTP server function	Through intranet or internet (See note.)	Used to transfer large files between the computer and PLC.	Computer (FTP client software)	*SECTION 4 FTP Server*
Socket service function		Used to transfer data between general-purpose applications and the PLC.	Computer (General applications that do not use FINS communications)	*SECTION 6 Socket Services*
Automatic clock adjust function	Through intranet	Used to automatically adjust the PLC's internal clock.	SNTP Server	*SECTION 5 Automatic Clock Adjustment Function*
FINS communications	Through intranet or internet (See note.)	Used to access the PLC from a computer (FINS application) or send message communications from one PLC to another. **Note** The PLC can be accessed with FINS message communications even from a DHCP client computer or computer with an unspecified FINS node address.	Computer (User-created FINS communications application)	*SECTION 7 Using FINS Communications to Create Host Applications*

Note When transferring data through the internet, a global IP address must be acquired for the Ethernet Unit.

1-2 Functions Listed by Purpose

Timing and direction	User purpose	Communications service	Method	Restrictions
User-specified timing, sent from computer	Reading and writing data in the CPU Unit's I/O memory	Mail Receive Function	IOMRead (I/O memory read) and IOMWrite (I/O memory write) commands	The maximum data size is 6,000 words.
	Changing the CPU Unit's operating mode		ChangeMode command	---
	Performing operations on EM file memory or a Memory Card installed in the CPU Unit		FileWrite, FileRead, FileDelete, and FileList commands	The maximum data size is 1 MB.
	Backing up the user program or parameter area in the CPU Unit		UMBackup (User program backup) and PARAMBackup (Parameter area backup) commands	---
	Reading or clearing the error log in the Ethernet Unit or CPU Unit		ErrorLogRead and ErrorLogClear commands	---
	Sending a specific FINS command to a specific Unit		FinsSend command	---

Timing and direction	User purpose	Communications service	Method	Restrictions
Automatic execution when a preset condition is met, sent to computer (See note.)	Reading data in the CPU Unit's I/O memory	Mail Send Function	Specify a data file as an attached file and specify the starting read address and number of words.	The maximum data size is 6,000 words.
	Reading data from a Memory Card installed in the CPU Unit		Specify any file as an attached file.	The maximum data size is 1 MB.
	Receiving a user-defined message as an e-mail		Store the desired message in ASCII in the CPU Unit's I/O memory.	The maximum message length is 1,024 characters (alphanumeric characters only).
User-specified timing, sent from computer	Performing operations on EM file memory or a Memory Card installed in the CPU Unit	FTP Server Function	Login to the Ethernet Unit from the FTP client software and send the FTP command.	The data size is not restricted. The IP address for the Ethernet Unit must be private and fixed.
	Reading and writing data in the CPU Unit's I/O memory from a general application (not using FINS communications)	Socket Service Function	Socket service operations can be executed by executing the CMND instruction or setting control bits in the PLC.	The IP address for the Ethernet Unit must be private and fixed.
Performed at a set time every day or from the ladder program	Automatically correcting the PLC's internal clock	Automatic Clock Adjust Function	Install the SNTP server in the network and schedule the synchronization time in the Ethernet Unit.	---
Temporarily connecting a computer to perform operations from a FINS application such as the CX-Programmer	Performing online operations on the CPU Unit	FINS communications	One function stores the counterpart FINS nodes' connection information. Another function automatically assigns node addresses.	The IP address for the Ethernet Unit must be private and fixed.
Performing operations from two or more FINS applications in the computer			A function supports simultaneous online connections of multiple applications in the computer.	---

Note Any one of the following conditions can be specified to send e-mail automatically:
A periodic timer times out, the Mail Send Switch is turned from OFF to ON, a specified word contains a particular value, a specified bit turns from OFF to ON, the CPU Unit's operating mode changes, a fatal error occurs, or an event is stored in the error log.

1-3 Table of Protocols

Communications service	Protocol used	Situation when used	CX-Programmer's Unit setting tag name	Reference
Mail Send Function	SMTP	Required	SMTP	*SECTION 2 Mail Send Function*
	POP	When using “POP before SMTP”	POP	
	DNS	When specifying the SMTP server and POP server by host names	DNS	

Communications service	Protocol used	Situation when used	CX-Programmer's Unit setting tag name	Reference
Mail Receive Function	SMTP	Required	SMTP	*SECTION 3 Receive Mail Function*
	POP	Required	POP	
	DNS	When specifying the SMTP server and POP server by host names	DNS	
FTP Server Function	FTP	Optional	User set	*SECTION 4 FTP Server*
Socket Service Function	TCP/IP	Optional	User set	*SECTION 6 Socket Services*
	UDP/IP	Optional	User set	
Automatic Clock Adjust Function	SNTP	Required	Automatic clock synchronization	*SECTION 5 Automatic Clock Adjustment Function*
	DNS	When specifying the SNTP server by a host name	DNS	
Creating a FINS communications host application	FINS	Optional	User set	*SECTION 7 Using FINS Communications to Create Host Applications*

1-4 Common Protocol Settings

1-4-1 SMTP

The SMTP server settings must be made in order to use the Mail Send Function or Mail Receive Function.

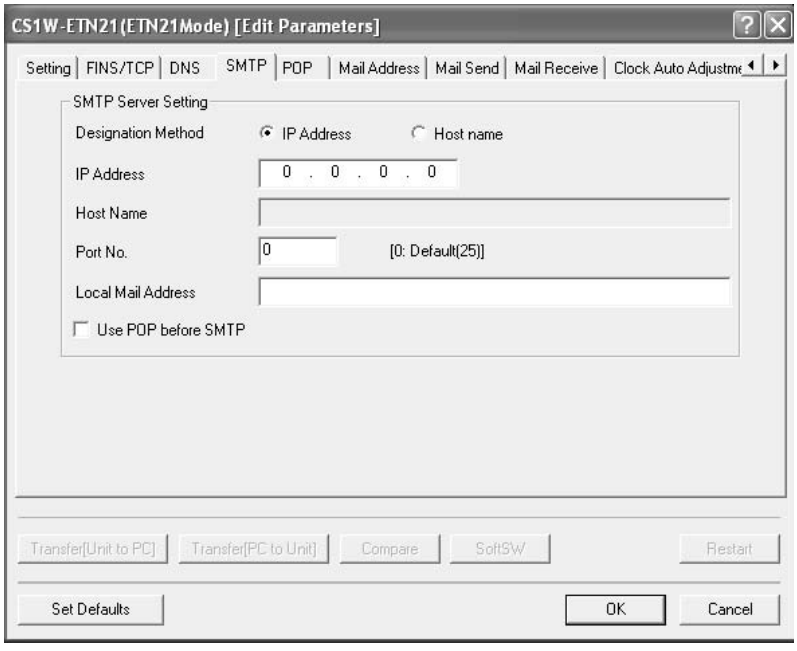

Item	Contents	Default
Local mail address	Set the mail address for the Ethernet Unit.	None
Server specification type	Select whether the SMTP server used for sending mail is to be specified by IP address or the host's domain name (i.e., host name).	IP Address

Item	Contents	Default
IP Address	Set the IP address for the SMTP server used for sending mail. This setting is enabled only when “IP address” is selected as the method for specifying the server.	0.0.0.0
Host name	Set the host domain name (i.e., the host name) for the SMTP server that is to be used for sending mail. This setting is enabled only when “host name” is selected as the method for specifying the server.	None
Port No.	Set the port to be used for connecting to the SMTP server that is to be used for sending mail. This setting does not normally need to be changed.	0 (No. 25 is used.)
Use POP before SMTP	Select whether or not to use the mail receiving method (POP before SMTP) in which the POP server must be accessed (to receive mail) before the SMTP server is accessed (to send mail).	Disabled

Note The “POP before SMTP” is an authentication function required when sending mail (using the SMTP server). Normally, account name and password authentication is performed with the POP server because there isn't an authentication process in the SMTP server. Most ISPs (Internet Service Providers) use the “POP before SMTP” authentication method to verify users sending e-mail.

1-4-2 POP

Always enter the POP server settings when using the Mail Receive Function.

Also, set the POP server settings when using “POP before SMTP” in the Mail Send Function.

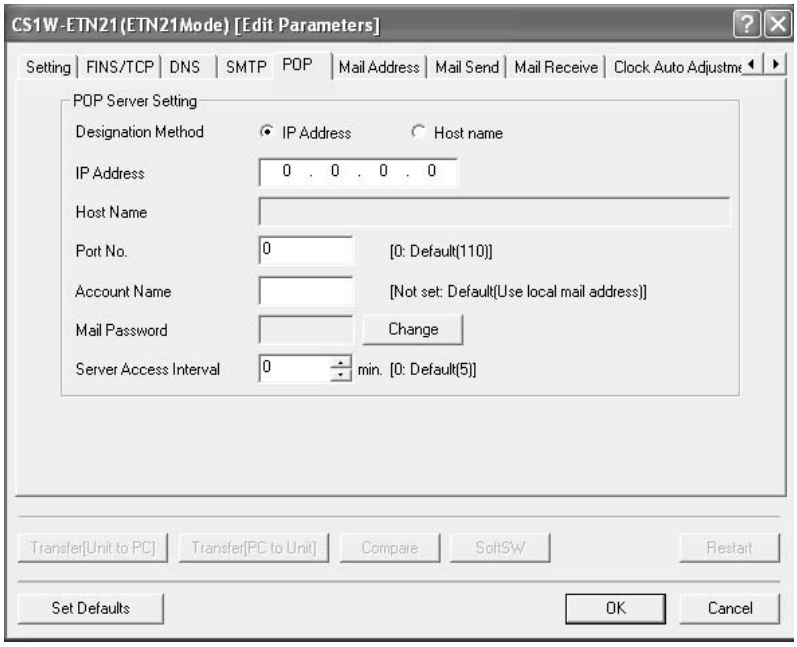

Item	Contents	Default
Server specification type	Select whether the POP3 server used for receiving mail is to be specified by IP address or the host's domain name (i.e., host name).	IP Address
IP Address	Set the IP address for the POP3 server used for receiving mail. This setting is enabled only when “IP address” is selected as the method for specifying the server.	0.0.0.0
Host name	Set the host domain name (i.e., the host name) for the POP3 server that is to be used for receiving mail. This setting is enabled only when “host name” is selected as the method for specifying the server.	None
Port No.	Set the port to be used for connecting to the POP3 server that is to be used for receiving mail. This setting does not normally need to be changed.	0 (Number 110 is used.)
Account Name	Sets the account name (up to 9 characters) of the account used to send and receive e-mail. Only alphanumeric characters can be used. If no account name is set, the portion of the local e-mail address to the left of the @ will be used. In this case, the number of characters in the account name is not restricted.	None
Mail password	Sets the password (up to 8 characters) of the account used to send and receive e-mail.	None
Server access interval time	Set the interval for sending and receiving mail. Mail will be automatically sent and received at the interval set here.	0 (5 minutes)

1-4-3 DNS

The DNS server's settings must be entered when the POP3 server, SMTP server, and SNTP server are specified with host names.

The DNS server manages the IP addresses and host names of the nodes that communicate in the network. The Ethernet Unit automatically acquires each server's IP address from the DNS server and uses those acquired IP addresses.

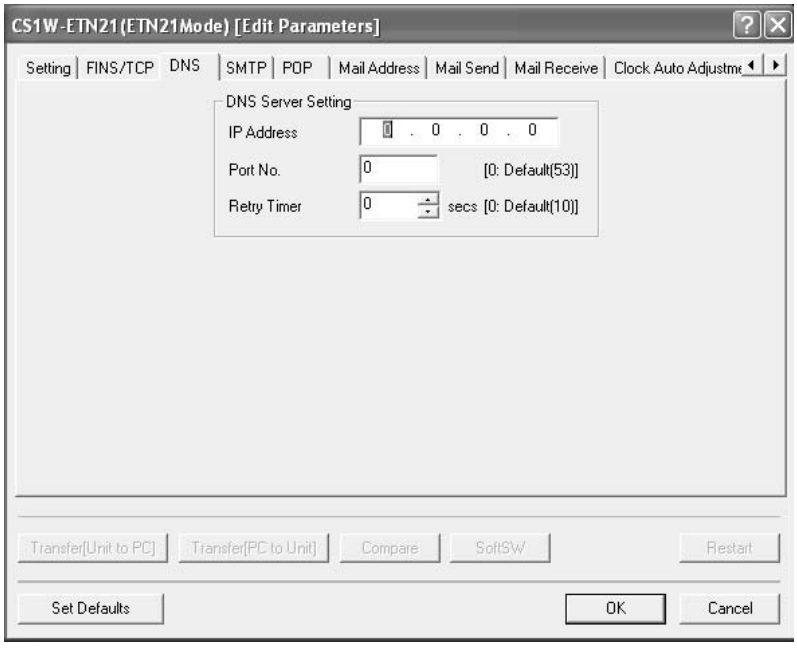

Item	Contents	Default
IP Address	Set the IP address for the DNS server.	None
Port No.	Set the port to be used for connecting to the DNS server. Normally, the default setting is used.	0 (Number 53 is used.)
Retry Timer	Set the time to elapse before retrying when a connection to the DNS server fails. Normally, the default setting is used. Units: Seconds Number of retries: Fixed at 3	0 (Sets 10 seconds.)

SECTION 2
Mail Send Function

This section provides an overview and describes how to use the Ethernet Unit's Mail Send Function, including application examples and troubleshooting information.

2-1 Mail Send Function Overview 10
2-1-1 Introduction. 10
2-1-2 Comparison with the Earlier Mail Send Function 11
2-1-3 Mail Send Function's Compatibility with Earlier Models 11
2-2 Mail Send Function Details. 11
2-2-1 Contents of E-mail Body 12
2-2-2 Contents of E-mail Body 13
2-2-3 Attached File Details 15
2-2-4 Summary of E-mail Body Information and Attached Files 16
2-3 Mail Send Function Specifications 17
2-3-1 Function Specifications 17
2-3-2 Details of the Available Mail Triggers 18
2-4 Using the Mail Send Function 18
2-4-1 Procedure 18
2-4-2 Settings Required for the Mail Send Function 19
2-4-3 Mail Address. 21
2-4-4 Send Mail 21
2-5 Mail Send Function Status 25
2-5-1 Send Mail Status. 25
2-5-2 Mail Send Switch, Accessing Memory/Sending Mail Flag 26
2-6 I/O Memory Data Formats 26
2-7 Attached File Transfer Times 28
2-8 Mail Send Function Errors 28
2-8-1 Identifying and Correcting Mail Send Function Errors 28
2-8-2 Troubleshooting Mail Send Errors with LED Indicators 29
2-8-3 Error Log Error Codes for the Mail Send Function 29
2-9 Example Application. 30
2-9-1 Step 1. Create the I/O Table 30
2-9-2 Step 2. Make the Unit Setup Settings from the CX-Programmer. . . 30
2-9-3 Step 3. Transfer the CPU Bus Unit Setup Settings. 32
2-9-4 Step 4. Automatic Transmission when Send Condition is Satisfied. 32

2-1 Mail Send Function Overview

2-1-1 Introduction

The Mail Send Function sends an e-mail from the Ethernet Unit to a specified e-mail address when a predetermined condition occurs in the PLC.

Data in the CPU Unit's I/O memory areas (or any file in the Memory Card) can be sent as an attached file.

In addition, user-set ASCII information as well as the Ethernet Unit's error log and status information can be sent as text in the body of the e-mail.

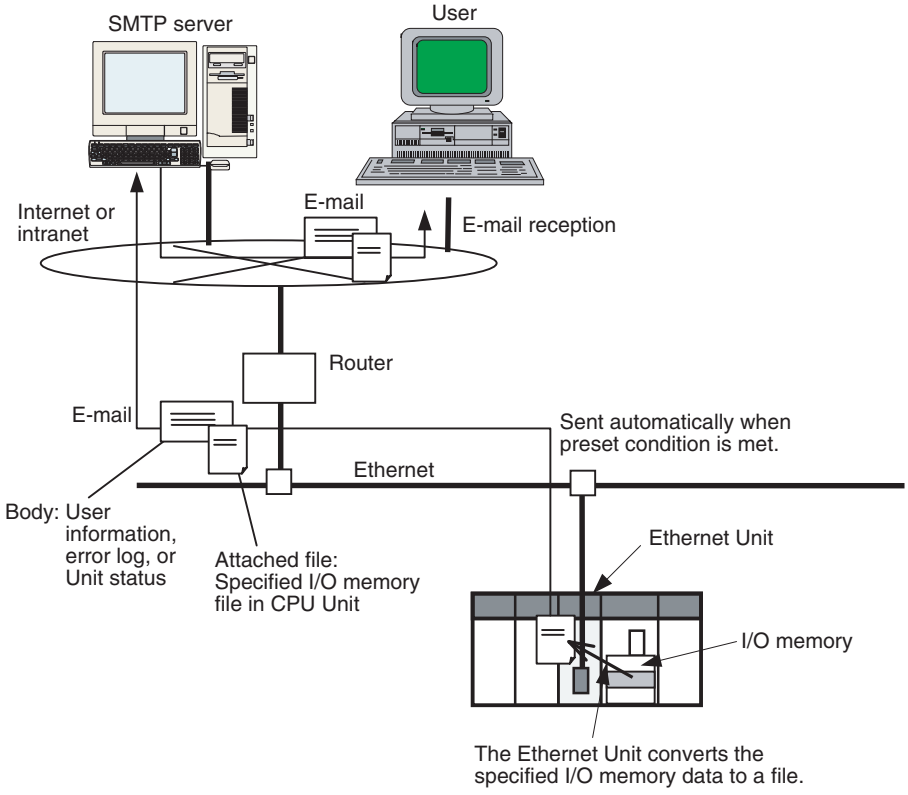

Advantages

A specific range of I/O memory data in the CPU Unit can be sent automatically as an attached file (through the internet or intranet) when a particular condition occurs. Some conditions that can be used are a bit turning ON to indicate an error, a specified word containing a given value, or a periodic time being reached.

E-mails can be sent when various conditions in the existing ladder program are met. It is not necessary to modify the existing ladder program.

The Mail Send Function can be used to create various applications such as error monitoring of remote equipment, periodic monitoring of equipment, and quality control applications.

Description

When a specified sending condition is met, the following e-mail body data and attached files can be sent automatically as an e-mail to the e-mail address specified in the CPU Bus Unit System Setup.

■ Body Data

Any desired combination of user-set information (any ASCII character string), error log information, and status information can be sent.

■ **Attached Files**

An I/O memory data file created automatically by the Ethernet Unit (a specified range of the CPU Unit's I/O memory data converted to a .IOM, .TXT, or .CSV file) or any file in file memory (in the CPU Unit's Memory Card) can be sent as an attached file.

■ **Send Timing**

An e-mail can be sent automatically when a dedicated control bit goes from OFF to ON, a specified word's value meets a preset condition, a specified bit's status changes, an entry is recorded in the Ethernet Unit's error log, the CPU Unit's status changes (a non-fatal error occurs, a fatal error occurs, or the operating mode changes), or at periodic intervals.

■ **Send Mail Conditions**

Up to 8 send mail conditions can be preset to send an e-mail automatically when the specified conditions are met. Conditions include the send destination, trigger type, I/O memory addresses to be converted to a data file or the name of the file to be read from file memory, and periodic sending interval.

2-1-2 Comparison with the Earlier Mail Send Function

Item	Earlier version	Current version
Model	CS1W-ETN01/11 and CJ1W-ETN11	CS1W-ETN21 CJ1W-ETN21
Attached file	Not supported.	Supported. A range of I/O memory data can be converted to a data file and attached, a file in a Memory Card mounted in the CPU Unit can be attached, or a file in the CPU Unit's EM file memory can be attached.
Send mail conditions	Any of the following: A dedicated control bit (the Mail Send Switch) goes OFF to ON, the status of the Ethernet Unit changes (an entry is recorded in the error log), periodic timer	Any of the following: • A dedicated control bit (Mail Send Switch) goes OFF-to-ON. • A specified word's value changes (=, <>, <, <=, >=, or > condition). • A specific bit changes (OFF-to-ON or ON-to-OFF). • Ethernet Unit changes (entry in error log). • CPU Unit changes (non-fatal error occurs, fatal error occurs, or operating mode changes). • Periodic timer

2-1-3 Mail Send Function's Compatibility with Earlier Models

When a CS1W-ETN21 or CJ1W-ETN21 is used to replace a CS1W-ETN01/11 or CJ1W-ETN11 Ethernet Unit in an application, the Unit's functions are downwardly compatible if the following status bits are used.

ETN01/11	ETN21
User mail send status	Status of send condition setting 5
Periodic mail send status	Status of send condition setting 6
Error mail send status	Status of send condition setting 7

2-2 Mail Send Function Details

The Mail Send Function can send information in the body of the e-mail as well as in an attached file.

2-2-1 Contents of E-mail Body

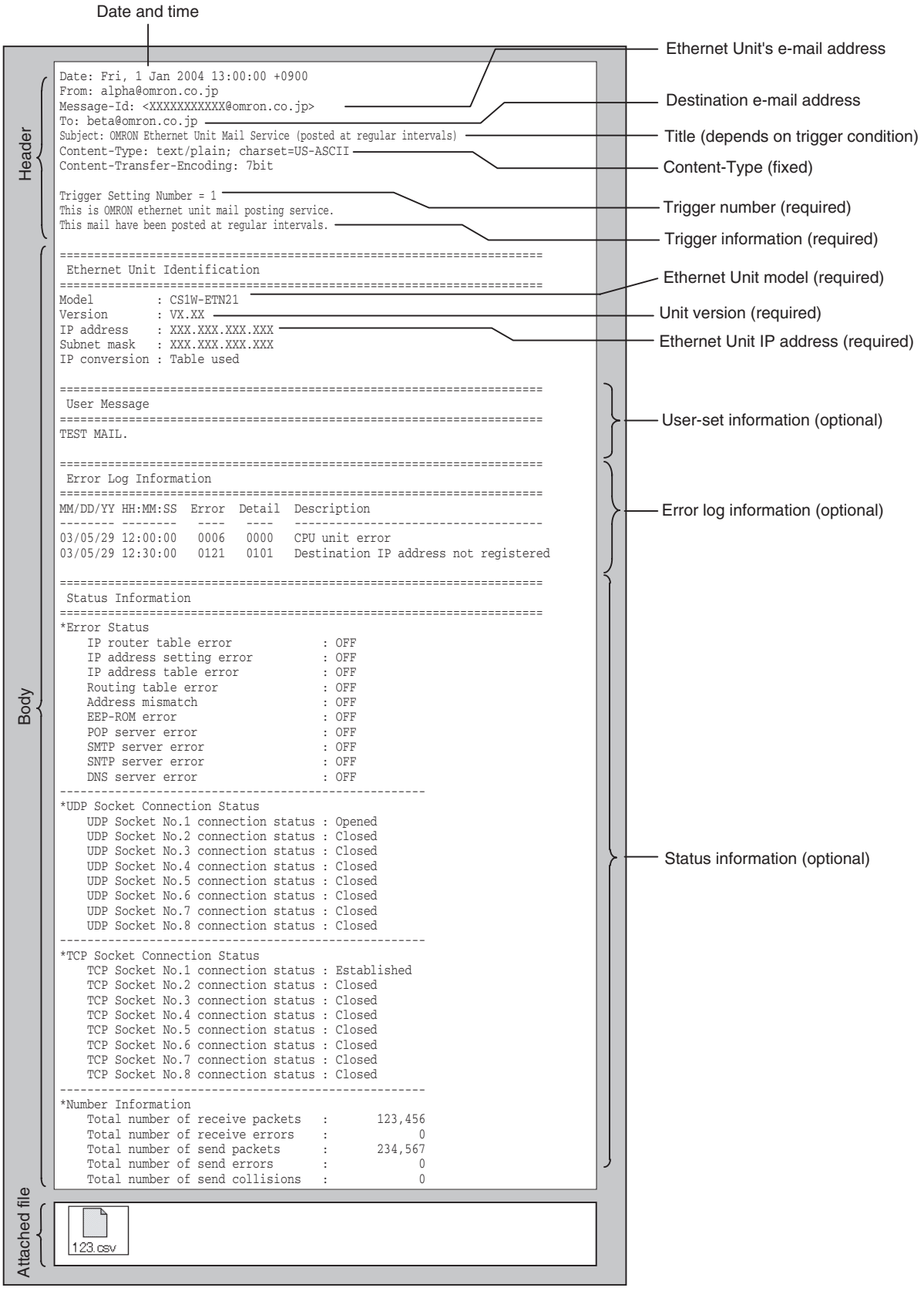


```
Date: Fri, 1 Jan 2004 13:00:00 +0900
From: alpha@omron.co.jp
Message-Id: <XXXXXXXXXXX@omron.co.jp>
To: beta@omron.co.jp
Subject: OMRON Ethernet Unit Mail Service (posted at regular intervals)
Content-Type: text/plain; charset=US-ASCII
Content-Transfer-Encoding: 7bit

Trigger Setting Number = 1
This is OMRON ethernet unit mail posting service.
This mail have been posted at regular intervals.

=====================================================================
 Ethernet Unit Identification
=====================================================================
Model         : CS1W-ETN21
Version       : VX.XX
IP address    : XXX.XXX.XXX.XXX
Subnet mask   : XXX.XXX.XXX.XXX
IP conversion : Table used

=====================================================================
 User Message
=====================================================================
TEST MAIL.

=====================================================================
 Error Log Information
=====================================================================
MM/DD/YY HH:MM:SS  Error  Detail  Description
-------- --------   ----   ----   -------------------------------------
03/05/29 12:00:00   0006   0000   CPU unit error
03/05/29 12:30:00   0121   0101   Destination IP address not registered

=====================================================================
 Status Information
=====================================================================
*Error Status
    IP router table error             : OFF
    IP address setting error          : OFF
    IP address table error            : OFF
    Routing table error               : OFF
    Address mismatch                  : OFF
    EEP-ROM error                     : OFF
    POP server error                  : OFF
    SMTP server error                 : OFF
    SNTP server error                 : OFF
    DNS server error                  : OFF
-----------------------------------------------------
*UDP Socket Connection Status
    UDP Socket No.1 connection status : Opened
    UDP Socket No.2 connection status : Closed
    UDP Socket No.3 connection status : Closed
    UDP Socket No.4 connection status : Closed
    UDP Socket No.5 connection status : Closed
    UDP Socket No.6 connection status : Closed
    UDP Socket No.7 connection status : Closed
    UDP Socket No.8 connection status : Closed
-----------------------------------------------------
*TCP Socket Connection Status
    TCP Socket No.1 connection status : Established
    TCP Socket No.2 connection status : Closed
    TCP Socket No.3 connection status : Closed
    TCP Socket No.4 connection status : Closed
    TCP Socket No.5 connection status : Closed
    TCP Socket No.6 connection status : Closed
    TCP Socket No.7 connection status : Closed
    TCP Socket No.8 connection status : Closed
-----------------------------------------------------
*Number Information
    Total number of receive packets   :       123,456
    Total number of receive errors    :             0
    Total number of send packets      :       234,567
    Total number of send errors       :             0
    Total number of send collisions   :             0
```

2-2-2 Contents of E-mail Body

Ethernet Unit's Status Information Header

The following header information is included.

- `Subject:` `OMRON Ethernet Unit Mail Service (Indicates trigger condition. See note.)`
- `Content-Type:` `text/plain;charset=US-ASCII`
- `Content-Transfer-Encoding:7bit`

Note The following trigger conditions are available.

Trigger condition	Text entered as subject
Software switch	`posted by user request`
Change in specified word's contents	`posted at changing channel value(= flag)`
	`posted at changing channel value(<> flag)`
	`posted at changing channel value(< flag)`
	`posted at changing channel value(<= flag)`
	`posted at changing channel value(>= flag)`
	`posted at changing channel value(> flag)`
Change in specified bit	`posted at rising edge of bit`
	`posted at falling edge of bit`
Change in ETN Unit	`posted at error occurrence`
Change in CPU Unit	`posted at changing CPU mode`
	`posted at CPU error occurrence(FAL)`
	`posted at CPU error occurrence(FALS)`
Periodic timer	`posted at regular intervals`

Trigger Information

The trigger information is always included in the e-mail.

- Trigger number: 1 to 8
- Shared message: "`This is OMRON ethernet unit mail posting service`."
- Trigger-specific messages: The following messages are displayed.

Trigger condition	Trigger-specific message in e-mail header
Software switch	`This mail have been posted by user request`
Change in specified word's contents (See note.)	`This mail have been posted at changing channel value(= flag)`
	`This mail have been posted at changing channel value(<> flag)`
	`This mail have been posted at changing channel value(< flag)`
	`This mail have been posted at changing channel value(<= flag)`
	`This mail have been posted at changing channel value(>= flag)`
	`This mail have been posted at changing channel value(> flag)`
Change in specified bit's status	`This mail have been posted at rising edge of bit`
	`This mail have been posted at falling edge of bit`
Change in ETN Unit	`This mail have been posted at error occurrence`

Trigger condition	Trigger-specific message in e-mail header
Change in CPU Unit	This mail have been posted at changing CPU mode (PRG->MON)
	This mail have been posted at changing CPU mode (PRG->RUN)
	This mail have been posted at changing CPU mode (MON->PRG)
	This mail have been posted at changing CPU mode (MON->RUN)
	This mail have been posted at changing CPU mode (RUN->PRG)
	This mail have been posted at changing CPU mode (RUN->MON)
	This mail have been posted at changing CPU mode (PowerON->PRG)
	This mail have been posted at changing CPU mode (PowerON->MON)
	This mail have been posted at changing CPU mode (PowerON->RUN)
	This mail have been posted at CPU error occurrence(FAL)
	This mail have been posted at CPU error occurrence(FALS)
Periodic timer	This mail have been posted at regular intervals

Note Another sentence will be attached indicating how the specified word's value has changed: “Channel data has changed from XX to XX.”

Ethernet Unit Information

The Ethernet Unit information is always included in the e-mail.

- Model
- Version
- IP address (decimal notation)
- Subnet mask (decimal notation)
- IP address conversion method

Optional Information

The optional information that can be included in the e-mail body is listed below.

Different information can be selected with each mail trigger, and more than one type of information can be selected. (The selections are specified in the CPU Bus Unit System Setup.) If no optional information is selected, the e-mail will not be sent even when the trigger condition is met.

■ User-set Information

User-set information is ASCII text set by the user in the CPU Unit's memory. Up to 1,024 bytes of data can be sent from the user-set mail data address set in the CPU Bus Unit Area.

Note (a) The user-set message sent in each e-mail can be changed just by changing the contents of the relevant words in the CPU Bus Unit Area. To change the user-set message easily, prepare several messages in advance and copy the desired message to the CPU Bus Unit Area when it is required.
The data set by the user is sent just as it is, and the code is not converted.

(b) If there is a null code character (00 Hex) in the data, only the data up to that point will be sent.

(c) The user-set data is sent as-is and the codes are not converted.

■ **Error Log Information**

The error log information includes all of the data stored in the Ethernet Unit's error log. The error log can contain up to 64 records. For details on the error log, refer to *8-3 Error Log* in the *Operation Manual Construction of Networks* (W420).

■ **Status Information**

The following Ethernet Unit data is sent.

1. Open/closed status of UDP sockets 1 to 8
2. TCP status of TCP sockets 1 to 8
3. Unit error information
4. Counter information
   Total number of receive packets, total number of receive errors, total number of send packets, total number of send errors, total number of send collisions

2-2-3 Attached File Details

Files that can be attached to e-mails are broadly divided into the following 2 groups.

- I/O memory data (IOM, TXT, and CSV formats)
- File data

Only one file can be attached to each e-mail.

I/O Memory Data (6,000 Words Max.)

When it is time to send the e-mail, the Ethernet Unit reads the specified amount of data starting at the specified I/O memory address in the CPU Unit, creates a file with that data, and sends the file with the e-mail as an attachment.

Files can be created with filename extension ".IOM", ".TXT", or ".CSV". These are CS/CJ Series file memory function files.

Extension	Content
.IOM	This is a binary file containing the specified number of words starting at the specified address. The words must be in the same data area.
.TXT	This is a tab-delimited text file containing the specified number of words starting at the specified address. The words must be in the same data area.
.CSV	This is a comma-delimited text file containing the specified number of words starting at the specified address. The words must be in the same data area.

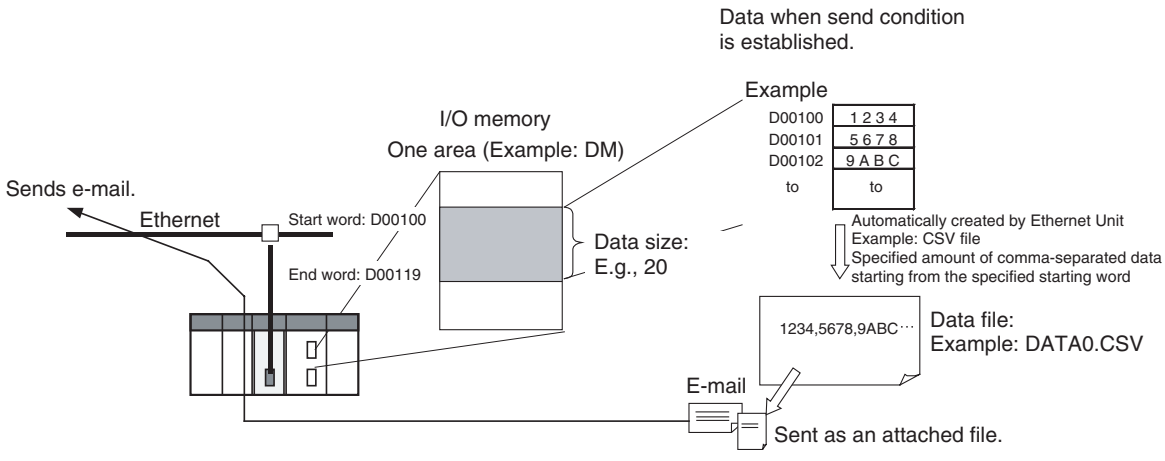

- Since the Ethernet Unit creates the data file automatically, the Accessing Memory/Sending Mail Flag (bit 01 of n+17 in the allocated CPU Bus Unit Area) will be ON while the CPU Unit's I/O memory is being accessed.
- To maintain the integrity of the data, write-protect the region of I/O memory being converted to a data file by preventing the region from being written from the ladder program while this flag is ON.

File Data (1 MB Max.)

Any file stored in the Memory Card installed in the CPU Unit (root directory MEMCARD) can be sent with the e-mail as an attached file.

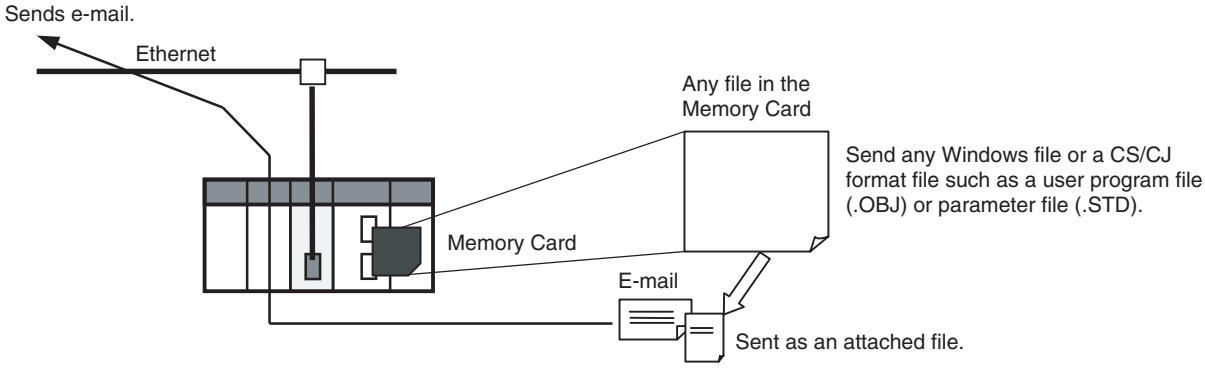

- Generally, CS/CJ file memory files are attached, such as program files (.OBJ), parameter files (.STD), and data files stored in the Memory Card (.IOM, .TXT, or .CSV).

2-2-4 Summary of E-mail Body Information and Attached Files

Data sent	Body/Attached file	
	E-mail body	Attached file
User-set information	ASCII text (Set in the CPU Unit's I/O memory by the user.)	---
Ethernet Unit's error log	ASCII text (Generated automatically by the Ethernet Unit.)	---
Ethernet Unit's status information	ASCII text (Generated automatically by the Ethernet Unit.)	---
I/O memory data (up to 6,000 words)	---	The Ethernet Unit automatically creates the data file (.IOM, .CSV, or .TXT) when the mail send condition (trigger setting) is established.
File data (Up to 1 MB)	---	Specify any file in the Memory Card installed in the CPU Unit.

2-3 Mail Send Function Specifications

2-3-1 Function Specifications

Item		Specifications
Destination e-mail address		Up to 2 addresses can be registered in the Unit Setup (CPU Bus Unit System Setup) and the addresses can be up to 50 characters long.
Subject		Fixed text (Depends on the trigger condition.)
Body		User-set information (up to 1,024 bytes), the Ethernet Unit's error log, and the Ethernet Unit's status information can be included individually or in any combination.
Attached file	Data format	Any one of the following files can be selected in the Unit Setup (CPU Bus Unit System Setup). • I/O memory data When the mail send condition is established, the data starting at the specified address in the CPU Unit's I/O memory is automatically converted to a data file (.IOM, .TXT, or .CSV) and sent as an attachment. • File data A Windows file with any filename extension
	Data size	• I/O memory data: Up to 6,000 words (The max. size is the same for all file types.) • File data: Up to 1 MB
	Format	MIME (version 1.0) format
	Number of attachments	Only 1 allowed
Mail triggers		The mail triggers can be selected in the Unit Setup (CPU Bus Unit System Setup). 1. OFF to ON transition of a dedicated control bit (the Mail Send Switch) 2. Change in the value of a specified word (=, <>, <, <=, >=, or >) 3. Change in the status of a specified bit (OFF-to-ON or ON-to-OFF transition) 4. Change in the Ethernet Unit (event entered into the error log) 5. Change in the CPU Unit (non-fatal error occurred, fatal error occurred, or operating mode changed) 6. Periodic timer **Note** Set the monitoring interval when using triggers 2 and 3. Set the sending interval when using trigger 6.
Number of mail triggers		Up to 8 triggers can be set and operated simultaneously.
Contents of send mail condition settings 1 to 8		Make the following settings in the Unit Setup (CPU Bus Unit System Setup): • E-mail body information (user-set information, error log, and status information) • Attached file type (any file in file memory or data file with filename extension .IOM, .TXT, or .CSV), attached file name • Mail trigger type (set trigger types listed above for triggers 1 to 8, trigger data address, and word comparison set value) • Starting address of user-set information • Starting address of attached I/O memory data and number of words • Time interval (Set for mail trigger 2 change in value of specified word, mail trigger 3 change in status of specified bit, or mail trigger 6 periodic timer)
Sending method (encoding)		Subject: Us ASCII Body: Us ASCII (Information types 2 through 4 can be sent in the body.) Attached file: Base64
Encryption		None
Compression		None
Protocols used		SMTP (port number 25: can be changed with the CX-Programmer Unit Setup) (The *POP before SMTP* method can also be set.)
Mail send status		Transmission status information such as mail being sent, normal completion, and error completion is indicated for each of the 8 send mail condition settings in words m (Mail Status 1) and m+17 (Mail Status 2) in the DM Area words allocated to the Ethernet Unit as a CPU Bus Unit.

2-3-2 Details of the Available Mail Triggers

Classification	Trigger type
User-set	Trigger when a specified word in the CPU Unit's I/O memory becomes equal to a set value.
	Trigger when a specified word in the CPU Unit's I/O memory becomes greater than a set value.
	Trigger when a specified word in the CPU Unit's I/O memory becomes less than a set value.
	Trigger when a specified bit in the CPU Unit's I/O memory goes from OFF to ON.
	Trigger when a specified bit in the CPU Unit's I/O memory goes from ON to OFF.
Change in status	Trigger when an event is registered in the Ethernet Unit's error log.
	Trigger when an error occurs in the Ethernet Unit.
	Trigger when a fatal error occurs in the CPU Unit.
	Trigger when a non-fatal error occurs in the CPU Unit.
	Trigger when the CPU Unit's operating mode (RUN, MONITOR, or PROGRAM) changes.
Periodic intervals	Trigger once every 10 minutes to 10 days (14,400 minutes).

2-4 Using the Mail Send Function

2-4-1 Procedure

1. Make the basic settings.
   For details, refer to *Section 2 Installation and Initial Setup* in the *Operation Manual Construction of Networks*.

↓

2. Connect the CX-Programmer online and make the following settings in the Unit Setup (CPU Bus Unit System Setup):
   - SMTP Tab (required)
   - POP Tab (when the *Use POP before SMTP* option is selected)
   - DNS Tab (when using a host name)
   - Mail Address Tab (Register one or two destination e-mail addresses.)
   - Send Mail Tab (Register up to 8 send mail conditions and corresponding send data.)

↓

3. Select ***Transfer to PLC*** from the Options Menu and click the **Yes** Button to transfer the Unit Setup (CPU Bus Unit System Setup) to the CPU Unit. (The settings data will be transferred to the CPU Bus Unit System Setup Area.)

↓

4. When the preset condition is established, an e-mail will be sent automatically to the specified destination address(es).

↓

5. The Send Mail Status (words m and m+17 of the allocated DM Area words) can be checked from the ladder program when necessary.

   Note To preserve the simultaneity of the data when a data file is being sent as an attachment, add a condition to write processes in the ladder program so that the region of memory being converted to a data file is not overwritten from the ladder program while memory is being accessed (mail is being sent). Bit 01 of word n+17 in the allocated CIO Area words will be ON while the relevant memory is being accessed.

Note The Ethernet Unit will be restarted when the settings data is transferred to the CPU Bus Unit System Setup Area, so that the new settings are read and

become effective. Verify that it is safe for the Ethernet Unit to restart before transferring the settings data.

2-4-2 Settings Required for the Mail Send Function

The following Unit settings must be made when using the Mail Send Function.

CX-Programmer Unit Setup Tab	Setting	Setting requirement	Reference
SMTP	Server specification type	Required.	*1-4 Common Protocol Settings*
	IP Address	One or the other is required, depending on the *Server specification type* setting.	
	Host name		
	Port No.	Rarely required (when a setting other than the default setting of 25 is required).	
	Local mail address	Required.	
	Use POP before SMTP	Required when the account must be authenticated with POP3 before sending mail.	
POP (See note 1.)	Server specification type	Required.	
	IP Address	One or the other is required, depending on the server specification method setting.	
	Host name		
	Port No.	Rarely required (when a setting other than the default setting of 110 is required).	
	Account Name	Required when the account name is different from the name up to the @ symbol in the e-mail address.	
	Mail password	Required.	
	Server access interval time	Optional (Change when the default setting of 5 minutes is unacceptable.)	
DNS (See note 2.)	IP Address	Required.	
	Port No.	Rarely required (when a setting other than the default setting of 53 is required).	
	Retry timer	Optional (Change when the default setting of 10 seconds is unacceptable.)	
Mail Address	Mail address 1	At least one e-mail address must be entered (mail address 1 or 2).	page 21
	Mail address 2		

CX-Programmer Unit Setup Tab	Setting	Setting requirement	Reference
Send Mail (Send mail conditions 1 to 8)	Trigger type	One type must be selected. • Rising edge of the Mail Send Switch: Select the *Software switch* Option. • Change in specified word's value: Select the *Word value change* Option and specify the *Area*, *Address*, *Value*, and *State*. • Change in specified bit's status: Select the *Bit value change* Option and specify the *Area*, *Address*, *Bit*, and *State*. • Entry in Ethernet Unit's error log: Select the *ETN condition* Option. • Change in CPU Unit status: Select the *CPU condition* Option. • Sending mail at periodic intervals: Select the *Periodic timer* Option.	page 21
	Interval time	Required when the trigger type is set to *Word value change*, *Bit value change*, or *Periodic timer*.	
	Mail address (destination)	Required.	
	Send user data	Required to send a user-set ASCII message in the e-mail body.	
	Send Error Log information	Required to send the error log information in the e-mail body.	
	Send status information	Required to send the Ethernet Unit's status in the e-mail body.	
	IO memory data	Required when the *Send file data/IO memory data* Option has been selected and a data file is being attached (*IO data (IOM)*, *IO data (CSV)*, or *IO data (TXT)*).	
	Attached file name	Required when the *Send file data/IO memory data* Option has been selected.	

Note (1) Make POP settings when the *Use POP before SMTP* Option was selected in the **SMTP** Tab.

(2) Make DNS settings when the *Server specification type* is set to *Host name* in the **SMTP** or **POP** Tab.

2-4-3 Mail Address

Set up to 2 destination mail addresses.

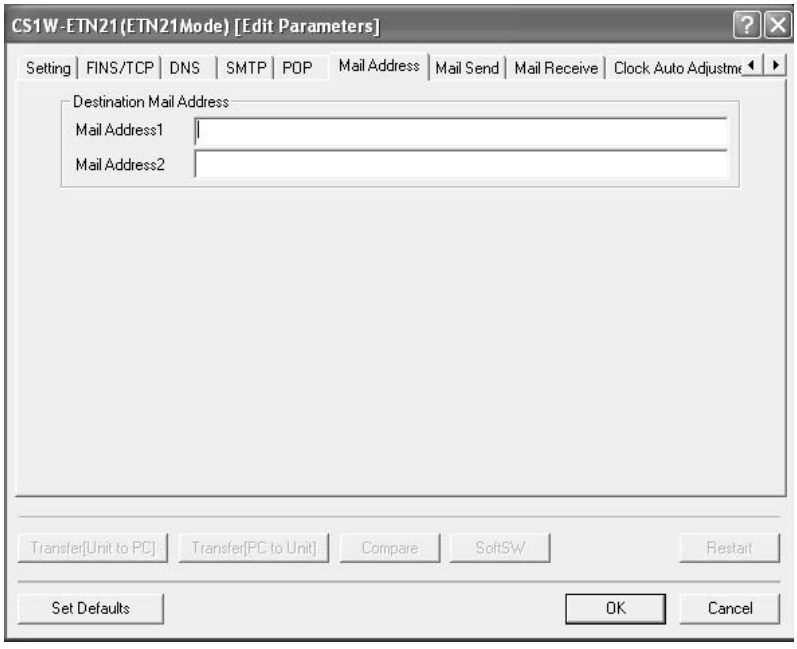

Item	Contents	Default
Mail address 1	Set one of the addresses to which the Ethernet Unit is to send mail. (Up to two addresses can be set.) Each mail address can be up to 50 characters long. **Note:** Mail can be sent to multiple addresses by punctuating the mail address with commas. For example, the following mail address entry will send the e-mail to address1@omron.co.jp and address2@omron.co.jp: address1@omron.co.jp,address2@omron.co.jp	None
Mail address 2		

2-4-4 Send Mail

Set the following settings for send mail conditions 1 to 8.

When a send mail condition or multiple conditions are met, the corresponding e-mail(s) will be sent automatically.

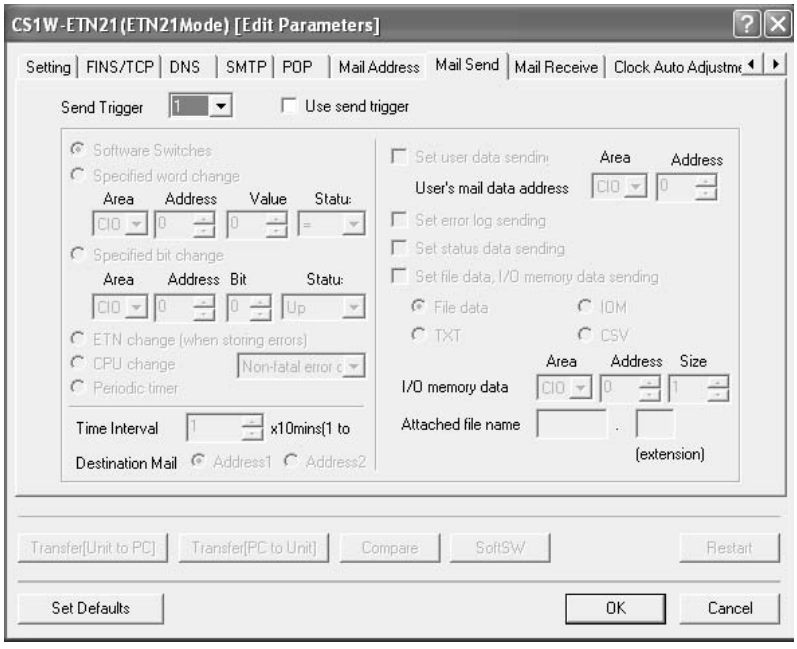

Send Mail Condition Settings

Item	Contents	Default
Trigger No.	Select a number as the trigger condition for sending mail. Up to eight trigger numbers can be registered.	None
Send mail upon trigger	Sets whether or not the selected mail trigger is to be enabled.	Not selected

Mail Address Specification (Required)

Item	Contents	Default
Mail address	Select whether the e-mail will be sent to destination mail address 1 or destination mail address 2.	Address 1

Data Sent by Mail (When Required)

■ Data Sent in E-mail Body

Select whether the user-set ASCII information, Ethernet Unit's error log, and/or Ethernet Unit's status information will be sent in the e-mail body.

Item	Contents	Default
Send user data	If this option is selected, user-created data is sent in the body of the mail.	Not selected
User-defined mail address	When the *Send user data* Option is selected (enabled), this address specifies the leading I/O memory address where the user-set ASCII data is stored. Up to 1,024 bytes of data can be stored at this address and sent in the e-mail. The data will be sent up to the first null code character (00 Hex) in the user-set data, so if there is a null code character in the data the e-mail data will end at that point. In addition, the user-set data will be sent as-is and codes will not be converted.	Area: CIO Address: 0

Item	Contents	Default
Send Error Log information	Selects whether or not the Ethernet Unit's error log will be included in the body of the e-mail.	Not selected
Send status information	Selects whether or not status information will be included in the body of the e-mail.	Not selected

■ **Data Sent in an Attached File**

These settings specify whether a file will be attached to the e-mail as well as the contents of the attached file if one is being attached.

Item	Contents	Default
Send file data or I/O memory data	This option selects whether or not a file will be attached to the e-mail.	Not selected
Attached file type	Select one of the following file types. • I/O data (.IOM) • I/O data (.TXT) • I/O data (.CSV) • File data (any file in file memory)	File data
IO memory data	If an I/O data file (.IOM, .TXT, or .CSV) is selected as the attached file type, this setting specifies the leading address where the data is stored and the number of words of data that the Ethernet Unit will convert to a file.	Area: CIO Address: 0 Size: 1

■ **Attached File Name**

Item	Contents		Default
Attached file name	If the above setting is checked so that files can be sent as attachments, then specify the name of the file that is to be sent.		None
	I/O data file selected	The data file will be created automatically with the file name entered in this field. **Note** Even if a filename extension is entered, it will be ignored. The Unit automatically adds the appropriate extension (.IOM, .TXT, or .CSV).	
	File data file selected	The file with the specified filename will be read from the Memory Card's root directory and attached to the e-mail. **Note** The file must be located in the Memory Card's root directory in order to be sent as an attachment.	

Send Mail Trigger Type Setting (Required)

Specifies the type send mail condition that will be used by the Ethernet Unit to automatically send e-mail.

When the Mail Send Function is not being used, disable the *send mail upon trigger* setting.

Note The same trigger type can be set for two or more trigger numbers (1 to 8).

Item	Contents	Default
Software switch	If this option is selected, an e-mail is sent whenever the Mail Send Switch goes from OFF to ON. The Mail Send Switch is bit 03 of word n in the CIO Area words allocated to the Ethernet Unit as a CPU Bus Unit. (n = 1500 + 25 × unit number)	Selected
Word value change	If this option is selected, the value of a specified word is compared with a set value with the selected comparison function (=, <>, <, <=, >=, or >), and an e-mail is sent whenever the condition is satisfied. Specify the desired word address in the drop-down lists.	Not selected
Bit value change	If this option is selected, an e-mail is sent whenever the specified bit goes from OFF-to-ON or ON-to-OFF. Specify the desired bit address in the drop-down lists.	Not selected
ETN condition	If this option is selected, an e-mail is sent whenever a new error is stored in the Ethernet Unit's error log.	Not selected
CPU condition	If this option is selected, mail is sent whenever any of the following conditions occur at the CPU Unit. Use the drop-down list at the right to select one of the following three conditions as the mail trigger. • When a non-fatal error occurs • When a fatal error occurs • When the operating mode is changed	Not selected
Periodic timer	If this option is selected, an e-mail is sent at fixed time intervals. The time interval is set in 10-minute units in the *Interval time* box. (The minimum interval is 10 minutes.)	Not selected

Note The *Area* and *Address* setting ranges are as follows:
CIO Area: 0 to 6143; Work Area: W000 to W511; Holding Area: H000 to H511; Auxiliary Area: A000 to A447; Timer PVs: T0000 to T4095; Counter PVs: C0000 to C4095; DM Area: D00000 to D32767; EM Area: 0 to 32767 in each bank

Interval Time Setting

(For Periodic timer, Word value change, and Bit value change Triggers)

Item	Contents		Default
Interval time	*Periodic timer* selected as the trigger type	Sets the time interval between e-mails. 1 to 1,440 (10 to 14,400 minutes) Units: 10-minute units Default: 0000	Selected
	Word value change or *Bit value change* selected as the trigger type	Sets the interval at which the word/bit contents are compared. 1 to 1,000 (1 to 1,000 s) Units: 1 s Default: 0000	

2-5 Mail Send Function Status

2-5-1 Send Mail Status

The following two Send Mail Status words are located in the DM Area words allocated to the Ethernet Unit as a CPU Bus Unit.

The leading address (m) of the allocated DM area depends on the Ethernet Unit's unit number (m = D30000 + 100 × unit number).

■ **Send Mail Status 1**

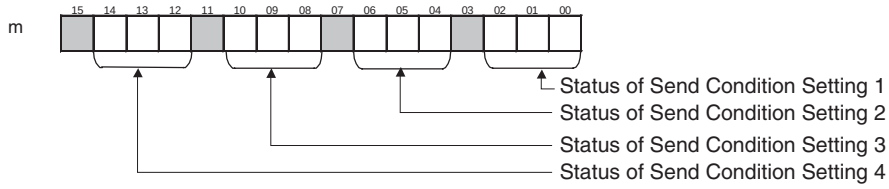

■ **Send Mail Status 2**

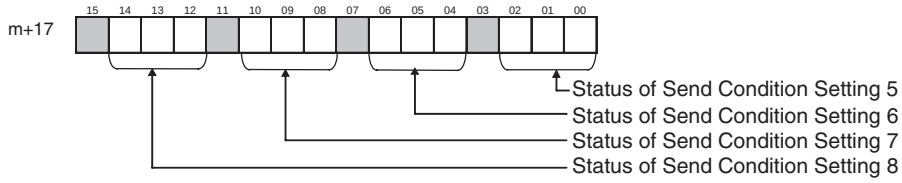

The transmission status of each send condition is indicated by the content of the corresponding 3 bits in Send Mail Status 1 or Send Mail Status 2, as shown in the following table.

Bit numbers			Status
02	**01**	**00**	
06	**05**	**04**	
10	**09**	**08**	
14	**13**	**12**	
0	0	0	• Mail is either waiting to be sent or the send condition is satisfied. AND • Mail hasn't been sent even once since the PLC was turned ON or the Ethernet Unit was restarted.
0	0	1	Mail is being sent.
0	1	0	• Mail is either waiting to be sent or the send condition is satisfied. AND • The last mail transmission was completed normally.
1	1	0	• Mail is either waiting to be sent or the send condition is satisfied. AND • An error occurred in the last mail transmission.
1	1	1	Mail transmission disabled. (Mail cannot be sent.)

0: OFF, 1: ON

While mail is being sent, the status of the three bits for the send condition will be 001. (For example, word m bits 02, 01, and 00 will be 001 when mail is being sent for send condition setting 1). If the transmission ends normally, the status of the three bits becomes 010. If the transmission ends with an error, the status becomes 110.

Check this transmission status in the ladder program as required.

2-5-2 Mail Send Switch, Accessing Memory/Sending Mail Flag

The Mail Send Switch and Accessing Memory/Sending Mail Flag are located in the CIO Area words allocated to the Ethernet Unit as a CPU Bus Unit.

The leading address (n) of the allocated CIO area depends on the Ethernet Unit's unit number (n = CIO 1500 + 25 × unit number).

■ Mail Send Switch (Bit 03 of n)

When the Mail Send Function's mail trigger type is set to *Software switch*, the Ethernet Unit will send an e-mail when this switch goes from OFF to ON.

The Mail Send Switch is turned OFF automatically when the mail transmission is completed.

Note Turning the switch OFF directly has no effect, even if the switch is turned OFF while mail is being sent.

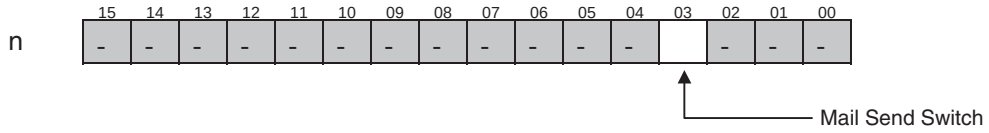

■ Accessing Memory/Sending Mail Flag (Bit 01 of n+17)

When a data file (IOM, TXT, or CSV) is being attached to the e-mail, the Ethernet Unit will access the CPU Unit's I/O memory and automatically create the data file when the e-mail is being sent. The Accessing Memory/Sending Mail Flag (bit 01 of n+17) will be ON while the CPU Unit's memory is being accessed.

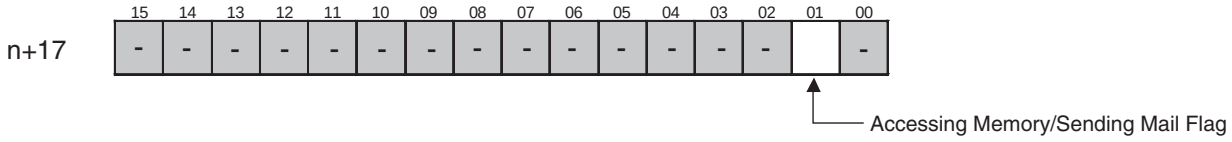

To maintain the uniformity of the data in the data file, use this flag as a condition for write operations in the ladder program to prevent the ladder program from overwriting the data while it is being converted to a data file.

2-6 I/O Memory Data Formats

IOM Format

When 5 words of hexadecimal I/O memory data (1234, 5678, 9ABC, etc.) are being sent as an attached file in IOM format, the data is stored in the attached file as shown in the following diagram.

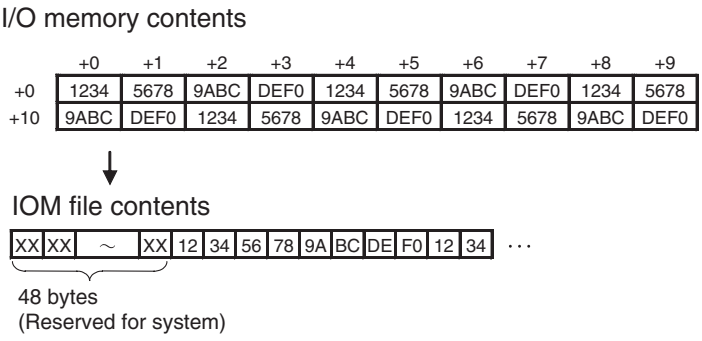

Note The IOM file format is compatible with the CPU Unit's READ DATA FILE and WRITE DATA FILE instructions (FREAD and FWRIT) set to binary data format.

TXT Format

When hexadecimal I/O memory data (1234, 5678, 9ABC, etc.) is being sent as an attached file in TXT format, the data is stored with the following procedure.

1. The word data is converted to ASCII.
2. The word data is delimited by hard tabs ([HT]: 09).
3. A return and line feed ([CR][LF]: 0D0A) are inserted after every 10 words.

I/O memory contents

	+0	+1	+2	+3	+4	+5	+6	+7	+8	+9
+0	1234	5678	9ABC	DEF0	1234	5678	9ABC	DEF0	1234	5678
+10	9ABC	DEF0	1234	5678	9ABC	DEF0	1234	5678	9ABC	DEF0

TXT file contents

31	32	33	34	09	35	36	37	38	09	39	41	42	43	09	···
1	2	3	4	[HT]	5	6	7	8	[HT]	9	A	B	C	[HT]	···
···	35	36	37	38	0D	0A	39	41	42	43	09	···			
···	5	6	7	8	[CR]	[LF]	9	A	B	C	[HT]	···			

↓

Contents of TXT file when displayed

```
1234□5678□9ABC□DEF0□1234□5678□9ABC□DEF0□1234□5678□
9ABC□DEF0□1234□5678□9ABC□DEF0□1234□5678□9ABC□DEF0
```

The □ character represents a hard tab and displayed as a tab in text displays.

Note The TXT file format is compatible with the CPU Unit's READ DATA FILE and WRITE DATA FILE instructions (FREAD and FWRIT) set to tab-delimited word format with a carriage return every 10 words.

CSV Format

When hexadecimal I/O memory data (1234, 5678, 9ABC, etc.) is being sent as an attached file in CSV format, the data is stored with the following procedure.

1. The word data is converted to ASCII.
2. The word data is delimited by commas (“,”: 2C).
3. A return and line feed ([CR][LF]: 0D0A) are inserted after every 10 words.

I/O memory contents

	+0	+1	+2	+3	+4	+5	+6	+7	+8	+9
+0	1234	5678	9ABC	DEF0	1234	5678	9ABC	DEF0	1234	5678
+10	9ABC	DEF0	1234	5678	9ABC	DEF0	1234	5678	9ABC	DEF0

CSV file contents

31	32	33	34	2C	35	36	37	38	2C	39	41	42	43	2C	···
1	2	3	4	,	5	6	7	8	,	9	A	B	C	,	···
···	35	36	37	38	0D	0A	39	41	42	43	2C	···			
···	5	6	7	8	[CR]	[LF]	9	A	B	C	,	···			

↓

Contents of CSV file when displayed

```
1234,5678,9ABC,DEF0,1234,5678,9ABC,DEF0,1234,5678,
9ABC,DEF0,1234,5678,9ABC,DEF0,1234,5678,9ABC,DEF0
```

Note The CSV file format is compatible with the CPU Unit's READ DATA FILE and WRITE DATA FILE instructions (FREAD and FWRIT) set to comma-delimited word format with a carriage return every 10 words.

2-7 Attached File Transfer Times

When sending an attached file with the Mail Send Function, the access time can be as long as 30 or 40 minutes for a very large file. The following tables show how long the CPU Unit's memory will be accessed by the Ethernet Unit (how long the Accessing Memory/Sending Mail Flag will be ON).

■ Access Times for CS1 and CJ1 CPU Units

Command	Data size	CPU Unit's operating mode	
		PROGRAM	RUN
		---	10 ms cycle time
IOM data	1 word	0.1 s	0.1 s
	6,000 words	0.3 s	0.3 s
File data	1 KB	0.3 s	1.1 s
	10 KB	1.3 s	7.3 s
	100 KB	10.6 s	72.2 s
	1 MB	137.4 s	1,139.5 s

■ Access Times for CS1-H and CJ1-H CPU Units

Command	Data size	CPU Unit's operating mode	
		PROGRAM	RUN
		---	10 ms cycle time
IOM data (words)	1 word	0.1 s	0.1 s
	6,000 words	0.3 s	0.2 s
File data (bytes)	1 KB	0.1 s	0.3 s
	10 KB	0.6 s	2.0 s
	100 KB	5.0 s	18.3 s
	1 MB	49.4 s	272.8 s

Note

(1) The access times for file data indicate Memory Card access times.

(2) The access times in the table above are standard times when the PLC Setup's “Fixed Peripheral Servicing Time” setting is set to the default value of 4% of the cycle time.

(3) The attached file transfer time can be reduced by increasing the time allowed for peripheral servicing in the PLC Setup's “Fixed Peripheral Servicing Time” setting.

2-8 Mail Send Function Errors

2-8-1 Identifying and Correcting Mail Send Function Errors

The following table shows the primary causes of e-mail transmission errors and corresponding solution.

Cause	Correction
The SMTP (DNS or POP) server address has not been set.	Correctly set each server address (IP address or host name).
POP before SMTP authentication error	Correctly set the POP settings (account and password).
SMTP (DNS or POP) server communications timeout	Inspect the communications path (Ethernet Unit, cable connections, hub, router, and server) and correct any problems or damage.
Local mail address has not been set.	Correctly set the local mail address.

Cause	Correction
Destination mail address has not been set.	Correctly set the destination mail address.
The trigger is set and the user-set data, error log, status, and file data/I/O data settings are all zero.	Correctly set the data to be sent.
Trigger type setting error	Correctly set the trigger type setting.
Details of trigger setting error	Correctly set the trigger type setting.
Specified word or specified bit data area/ address error	Correctly set the data area and address for the specified word or bit.

2-8-2 Troubleshooting Mail Send Errors with LED Indicators

RUN	ERC	ERH	LNK	HOST	Probable cause	Correction
Lit	---	Lit	---	Flashing	There is an error in the server (DNS, SMTP, or POP3) settings in the Unit Setup.	Read the Error Status Flags and error log and correct the setting that caused the error. If the error recurs, replace the CPU Unit.
		Not lit	---	Flashing	• An authentication error occurred in “POP before SMTP” authentication. A communications problem occurred with the server. • A network failure occurred in the communications path and caused an access timeout.	• Correctly set the POP settings (account and password). • Inspect the communications path (Ethernet Unit, cable connections, hub, router, and server) and correct any problems or damage.

Note For more details on the error log, refer to *8-3 Error Log* in the *Operation Manual Construction of Networks* (W420).

2-8-3 Error Log Error Codes for the Mail Send Function

When an error occurs while the Ethernet Unit is operating, the error code, detailed error code, and time the error occurred are saved in the error log. The following table provides a list of the error codes.

The error log can be read by sending FINS commands to the Ethernet Unit or by using the mail receive function and specifying the ErrorLogRead command.

Error code	Meaning	Detailed error code		Correction	EEPROM
		1st byte	2nd byte		
021A	Logic error in setting table	00	01: Data link table 02: Network parameters 03: Routing tables 04: Setup 05: CPU Bus Unit Words (CIO/DM)	Recreate the data specified by the 2nd byte of the detailed error code.	Saved

Error code	Meaning	Detailed error code		Correction	EEPROM
		1st byte	2nd byte		
03C1	Server setting error	00: DNS 01: SMTP 02: POP3 03: SNTP	01: IP address 02: Host name 03: Port number 04: Other parameters	Set the server settings correctly based on the information in the detailed error code.	---
03C4	Server connection error	00: DNS 01: SMTP 02: POP3 03: SNTP	01: Specified host does not exist 02: No service at specified host 03: Timeout 04: Closed unilaterally by host 05: Cannot connect because account information does not match 06: Host name resolution error 07: Transmission error 08: Reception error 09: Other error	Take either of the following measures. • Correct the settings for each server. • Inspect the communications path (Ethernet Unit, cable connections, hub, router, server), and correct the situation that is causing the error.	---

Note For more details on the error log, refer to *8-3 Error Log* in the *Operation Manual Construction of Networks* (W420).

2-9 Example Application

2-9-1 Step 1. Create the I/O Table

Mount the Ethernet Unit in the CPU Rack or Expansion Rack, connect online with the CX-Programmer or Programming Console, and create the I/O table.

2-9-2 Step 2. Make the Unit Setup Settings from the CX-Programmer

With the CX-Programmer connected online, select the Ethernet Unit in the CX-Programmer's *PLC I/O Table* Window, right-click and select *Unit Setup* from the popup menu. Make the following settings in the CPU Bus Unit Setup Area from the *CPU Bus Unit Setup* Window.

1. Initial Settings (Example)

Initial Server Settings

Tab	Item	Setting
SMTP	Server specification type	Host Name
	Host name	smtp.omron.com
	Port No.	25 (default value)
	Local mail address	ETN21@omron.co.jp
	Use POP before SMTP	Not selected

Tab	Item	Setting
DNS	IP Address	10.56.3.24
	Port No.	53 (default value)
	Retry timer	10 s (default value)

2. Destination Mail Address Setup

Tab	Item	Setting
Mail Address	Mail address 1	beta@omron.co.jp

3. Send Condition Setting 1

Tab	Item	Setting
Send Mail	Mail address	Address 1

Contents of E-mail Body

- Including User-set Data in E-mail Body

Tab	Item	Setting
Send Mail	Send user data	Selected
	User defined mail address	Set the leading address of the words in I/O memory that contain the user-set ASCII data.

- Including Error Log Information in E-mail Body

Tab	Item	Setting
Send Mail	Send Error Log information	Selected

- Including Status Information in E-mail Body

Tab	Item	Setting
Send Mail	Send status information	Selected

Attached File Information

Example:
Sending the 10 words of data from W300 to W309 as an attached file called W300.CSV.

Tab	Item	Setting
Send Mail	Send file data or I/O memory data	*Send file data or I/O memory data* selected; *I/O data (CSV)* selected
	Attached file name	W300
	I/O memory data	Area: W; Address: 0; Size: 10

Mail Trigger Condition Settings

- Send on the Rising Edge of the Dedicated Control Bit (Mail Send Switch)

Tab	Item	Setting
Send Mail	Mail trigger type	Bit value change

Note The Mail Send Switch is bit 03 of word n in the CIO Area words allocated to the Ethernet Unit as a CPU Bus Unit. (n = 1500 + 25 × unit number)

- Send when a Specified Word's Value meets a Preset Condition

  Example: Send e-mail when the content of D00300 is 500.

Tab	Item	Setting
Send Mail	Mail trigger type	Word value change Area: D Address: 300 Value: 500 State: =

- Send on the Rising or Falling Edge of a Specified Bit

Example: Send e-mail when W300 bit 00 goes from OFF to ON.

Tab	Item	Setting
Send Mail	Mail trigger type	Word value change Area: W Address: 300 Bit: 00 State: Rising

- Send when an Event is Recorded in the Ethernet Unit's Error Log

Tab	Item	Setting
Send Mail	Mail trigger type	ETN condition (at error storage)

- Send when there is a Change in the CPU Unit's Status

Tab	Item	Setting
Send Mail	Mail trigger type	CPU condition (Conditions are occurrence of a non-fatal error, occurrence of a fatal error, or change of the operating mode.)

- Send E-mails periodically at Fixed Intervals

  Example: Send an e-mail every 10 minutes.

Tab	Item	Setting
Send Mail	Mail trigger type	Periodic timer
	Interval time	10 min

2-9-3 Step 3. Transfer the CPU Bus Unit Setup Settings

Select ***Transfer to PLC*** from the Options Menu and click the **Yes** Button. The settings will be transferred to the CPU Bus Unit Setup Area in the CPU Unit.

2-9-4 Step 4. Automatic Transmission when Send Condition is Satisfied

When the send condition is satisfied, the e-mail is sent to the destination mail address automatically.

When necessary, check the status of the Mail Send Function by checking the Send Mail Status words (m and m+17 of the DM Area words allocated to the Ethernet Unit as a CPU Bus Unit) from the ladder program. The send condition's 3 status bits will be 001 when mail is being sent and 010 when the transmission has been completed normally.

SECTION 3
Receive Mail Function

This section describes how to use the Ethernet Unit's Mail Receive Function, including specifications, status details, I/O memory data formats, file transfer timing, application examples, and troubleshooting information.

3-1 Mail Receive Function Overview 34
3-1-1 Introduction. 34
3-1-2 Table of Remote Mail Commands 35
3-2 Mail Receive Function Specifications. 36
3-2-1 Function Specifications 36
3-3 Using the Mail Receive Function 38
3-3-1 Procedure 38
3-3-2 Settings Required for the Mail Receive Function. 39
3-3-3 Receive Mail Tab 40
3-4 Remote Mail Command Details 42
3-4-1 Format. 42
3-4-2 Response List 59
3-5 Mail Receive Function Status 60
3-5-1 Accessing Memory/Receiving Mail Flag 60
3-6 I/O Memory Data Formats 60
3-7 Attached File Transfer Times 62
3-8 Mail Receive Function Errors 63
3-8-1 Identifying and Correcting Mail Receive Function Errors 63
3-8-2 Troubleshooting Mail Receive Errors with LED Indicators. 63
3-8-3 Error Log Codes Related to the Mail Receive Function. 64
3-9 Example Application. 65
3-9-1 Step 1. Create the I/O Table 65
3-9-2 Step 2. Make the Unit Setup Settings from the CX-Programmer. . . 65
3-9-3 Step 3. Transfer the CPU Bus Unit Setup Settings. 66
3-9-4 Step 4. Send Remote Mail Commands. 66

3-1 Mail Receive Function Overview

3-1-1 Introduction

The mail receive function performs the following functions using e-mails sent to the Ethernet Unit.

1,2,3...

1. The user can enter a command in the e-mail and send that e-mail to the Ethernet Unit.
2. A command written in the e-mail subject can be executed when the e-mail is received. (The Ethernet Unit periodically checks the mail server to determine whether mail has been delivered.)
3. The Ethernet Unit is equipped with a function that sends a reply e-mail indicating the results of the command execution.

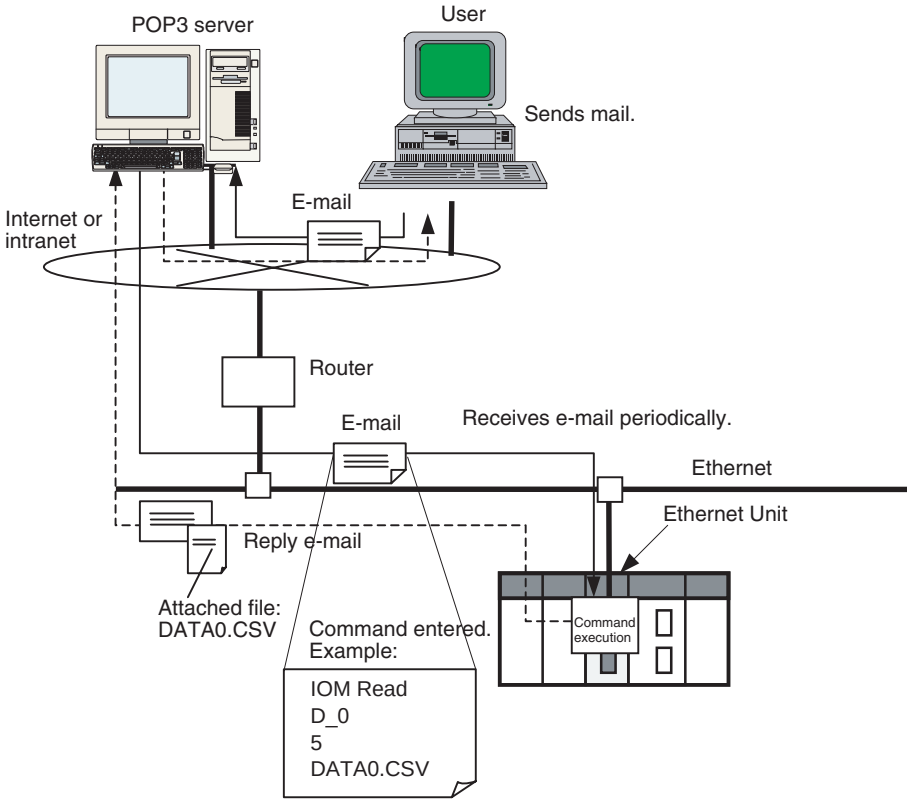

The following protection settings can be used with e-mail reception.

- Receive e-mail from specified addresses only.
- Restrict remote e-mail commands.
- Receive e-mails with specified filename extensions only.

If an e-mail does not conform to the protection settings, the e-mail command will be discarded without being processed.

Advantages

The mail receive function can be used to perform a variety of operations in the CPU Unit (such as reading/writing I/O memory, changing the operating mode, and executing file memory operations) through the internet or intranet without acquiring a fixed global address for the Ethernet Unit.

Description

Configuration of the Mail Receive Function

The user sends specific remote mail commands to the Ethernet Unit's e-mail address specified in the Unit Setup.

■ **Remote Mail Commands**

Enter the remote command (for example, FileRead) in ASCII in the e-mail subject line.

■ **Command Parameters**

Enter the parameters (for example, Para1:Overwrite=OK) in ASCII in the e-mail body.

■ **Attached File Data**

With remote write commands, a single file can be attached containing the write data.

When writing data (up to 6,000 words) in a specified part of I/O memory, the I/O memory data is attached as a data file (.IOM, .TXT, or .CSV).

When writing a data file (up to 1 MB) in file memory, any type of file can be attached.

Timing of Mail Reception

Mail sent to the local address will be received at the following times (interval time) and the corresponding command will be executed.

■ **Reception Timing**

Mail is checked at the check-mail interval (Server access interval time) set in the POP Tab. The Server access interval time is set in minutes and the default setting is 5 minutes.

Response to the Remote Mail Command

A response e-mail is automatically sent to the e-mail address from which the remote mail command was sent. The response e-mail contains the results of the remote mail command execution.

■ **Remote Mail Commands**

The remote command response (for example, Re: FileRead) is entered in ASCII in the e-mail subject line.

■ **Command Execution Results**

The response code (for example, Response Code:0000) is entered in ASCII in the e-mail body.

Any parameters entered in the command e-mail will remain in the body of the response e-mail (for example, >Para1:Overwrite=OK).

■ **Attached File Data**

With read commands from the PLC a single file can be attached in response.

When reading data (up to 6,000 words) in a specified part of I/O memory, the I/O memory data is attached as a data file (.IOM, .TXT, or .CSV).

When reading a data file (up to 1 MB) in file memory, any type of file can be attached.

3-1-2 Table of Remote Mail Commands

The following table lists the remote mail commands that can be sent.

Remote mail command type	Contents	Remote mail command
Accessing the CPU Unit's I/O memory area	A file can be attached to read/write data in a specified data area.	• IOMWrite (I/O Memory Write) • IOMRead (I/O Memory Read)
Changing the CPU Unit's operating mode	The CPU Unit's operating mode can be changed.	• ChangeMode (Operating Mode Change)

Remote mail command type		Contents	Remote mail command
File memory operations	Performing file operations on a Memory Card in the CPU Unit or EM file memory	A file can be attached to read/write data in any file in EM file memory or a Memory Card mounted in the CPU Unit. It is also possible to delete files and list files.	• FileWrite (File Write) • FileRead (File Read) • FileDelete (File Delete) • FileList (File List Read)
	Backing up data in user memory (user program or parameter area)	The CPU Unit's user program or parameter area data can be backed up to a file in EM file memory or a Memory Card mounted in the CPU Unit.	• UMBackup (User Memory Backup) • PARAMBackup (Parameter Area Backup)
Reading/Clearing the error log		The error log in the CPU Unit, a CPU Bus Unit, or a Special I/O Unit can be read or cleared.	• ErrorLogRead (Error Log Read) • ErrorLogClear (Error Log Clear)
Reading/Clearing the e-mail log		The Ethernet Unit received e-mail log can be read or cleared.	• MailLogRead (Mail Log Read) • MailLogClear (Mail Log Clear)
Performing an e-mail send/receive test		An e-mail send/receive test can be performed with the Ethernet Unit.	• Test (Mail Test)
Sending a FINS command		Any FINS command frame can be entered in the e-mail and sent through the Ethernet Unit to a specified unit address.	• FinsSend (FINS Command Send)

3-2 Mail Receive Function Specifications

3-2-1 Function Specifications

Received E-mail

Item	Specification		
Protocol used	POP3 (Port number: 110/TCP; can be changed in the CPU Bus Unit Setup.)		
Subject	The user can enter one of the following remote mail commands in the subject line.		
	Command type		Remote mail command
	Accessing the CPU Unit's I/O memory area		• IOMWrite (I/O Memory Write) • IOMRead (I/O Memory Read)
	Changing the CPU Unit's operating mode		• ChangeMode (Operating Mode Change)
	File memory operations	Performing file operations on a Memory Card in the CPU Unit or EM file memory	• FileWrite (File Write) • FileRead (File Read) • FileDelete (File Delete) • FileList (File List Read)
		Backing up data in user memory (user program or parameter area)	• UMBackup (User Memory Backup) • PARAMBackup (Parameter Area Backup)
	Reading/Clearing the error log		• ErrorLogRead (Error Log Read) • ErrorLogClear (Error Log Clear)
	Reading/Clearing the e-mail log		• MailLogRead (Mail Log Read) • MailLogClear (Mail Log Clear)
	Performing an e-mail send/receive test		• Test (Mail Test)
	Sending a FINS command		• FinsSend (FINS Command Send)
E-mail body	The user can enter parameters for the commands listed above.		

Item		Specification
Attached file	Data format	• IOM Write command: Writes an I/O memory data file (IOM, TXT, or CSV) to the CPU Unit. • File Write command: Any type of file (a file with any filename extension) can be written to EM file memory or a Memory Card mounted in the CPU Unit.
	Data size	• IOM Write command: 6,000 words max. (same limit for all file types) • File Write command: 1 MB max.
	Format	MIME (version 1.0) format
	Number of attachments	Only one file If more than one file is received, only the first file will be received and the remaining files will be discarded.
Reception (decoding)		Subject: Us ASCII Body: Us ASCII Attached file: Base64, quoted printable, 7 bit **Note** Only one attached file is allowed. The filename must be ASCII and up to 8 + 3 characters long.
Encryption		None
Compression		None
Command line		Body: Data can be entered. (Lines other than the parameter line are comment lines.) Attached file: Cannot be entered.
Protection		Protections when reading mail: Authentication by password. Protections when receiving remote mail commands: The following protections can be used. 1. Receive from specified mail address only. 2. Receive attached files with the specified filename extensions only. 3. Restrict the remote mail commands that will be accepted.

Response E-mail

Item		Specification
Protocol used		SMTP (Port number: 25/TCP; can be changed in the CPU Bus Unit Setup using the CX-Programmer.) (The *Use POP before SMTP* Option can be selected to authenticate account and password information with the “POP before SMTP” method.)
Subject		The remote mail command is automatically entered after “Re:”. Example: Re: FileRead
E-mail body		Contains the response code and response status (fixed text associated with the response code).
Attached file	Data format	• IOM Read command: Reads data from the CPU Unit and creates an I/O memory data file (IOM, TXT, or CSV). • File Read command: Any type of file (a file with any filename extension) can be read from EM file memory or a Memory Card mounted in the CPU Unit.
	Data size	• IOM Read command: 6,000 words max. (same limit for all file types) • File Read command: 1 MB max.
	Format	MIME (version 1.0) format
	Number of attachments	Only one file
Response (encoding)		Subject: Us ASCII Body: Us ASCII Attached file: Base64
Encryption		None
Compression		None

3-3 Using the Mail Receive Function

3-3-1 Procedure

1. Mount the Ethernet Unit in the CPU Rack or Expansion Rack, connect online with the CX-Programmer or Programming Console, and create the I/O table.

↓

2. With the CX-Programmer still connected online, make the following settings in the Unit Setup (CPU Bus Unit System Setup):
   - SMTP Tab (required)
   - POP Tab (required)
   - DNS Tab (when using a host name)
   - Receive Mail Tab (when using protection settings to specify the source e-mail address, allowed commands, and allowed attached files)

↓

3. Select ***Transfer to PLC*** from the Options Menu and click the **Yes** Button to transfer the Unit Setup (CPU Bus Unit System Setup) to the CPU Unit. (The settings data will be transferred to the CPU Bus Unit System Setup Area.)

↓

4. Create e-mail containing the remote mail command to send to the Ethernet Unit.
   1. For the destination address, enter the Ethernet's local mail address set in the CPU Bus Unit System Setup.
   2. Enter the command name as the e-mail subject.
   3. Enter the parameters in the e-mail body.
   4. If the command uses an attached file, attach the file.

   Note To preserve the simultaneity of the data when a data file is being sent as an attachment, add a condition to write processes in the ladder program so that the region of memory being converted to a data file is not overwritten from the ladder program while memory is being accessed (mail is being received). Bit 02 of word n+17 in the allocated CIO Area words will be ON while the memory is being accessed.

↓

5. Send the created e-mail to the Ethernet Unit.

↓

6. A response e-mail will be returned automatically.

Note The Ethernet Unit will be restarted when the settings data is transferred to the CPU Bus Unit System Setup Area, so that the new settings are read and become effective. Verify that it is safe for the Ethernet Unit to restart before transferring the settings data.

3-3-2 Settings Required for the Mail Receive Function

The following Unit settings must be made when using the Mail Receive Function.

CX-Programmer Unit Setup Tab	Setting	Setting requirement	Reference
SMTP	Server specification type	Required.	*1-4 Common Protocol Settings*
	IP Address	One or the other is required, depending on the *Server specification type* setting.	
	Host name		
	Port No.	Rarely required (when a setting other than the default setting of 25 is required).	
	Local mail address	Required.	
	Use POP before SMTP	Required when the account must be authenticated with POP3 before sending mail.	
POP	Server specification type	Required.	
	IP Address	One or the other is required, depending on the server specification method setting.	
	Host name		
	Port No.	Rarely required (when a setting other than the default setting of 110 is required).	
	Account Name	Required when the account name is different from the name up to the @ symbol in the e-mail address. (9 characters max.)	
	Mail password	Required. (8 characters max.)	
	Server access interval time	Optional (Change when the default setting of 5 minutes is unacceptable.)	
DNS (See note.)	IP Address	Required.	
	Port No.	Rarely required (when a setting other than the default setting of 53 is required).	
	Retry timer	Optional (Change when the default setting of 10 seconds is unacceptable.)	
Receive Mail	Mail address	Select the Protect using mail address Option when you do not want to receive mail from addresses other than the specified address.	page 40
	Receive file with specified extension only	Select this option when you do not want to receive attached files other than the specified types.	
	Receive specified commands only	Select this option when you want to specify the remote mail commands that can be received.	

Note Make DNS settings when the Server specification type is set to Host name in the **SMTP** or **POP** Tab.

3-3-3 Receive Mail Tab

The CPU Bus Unit settings for the mail receive function can be set in the CX-Programmer's CPU Bus Unit Setup Window.

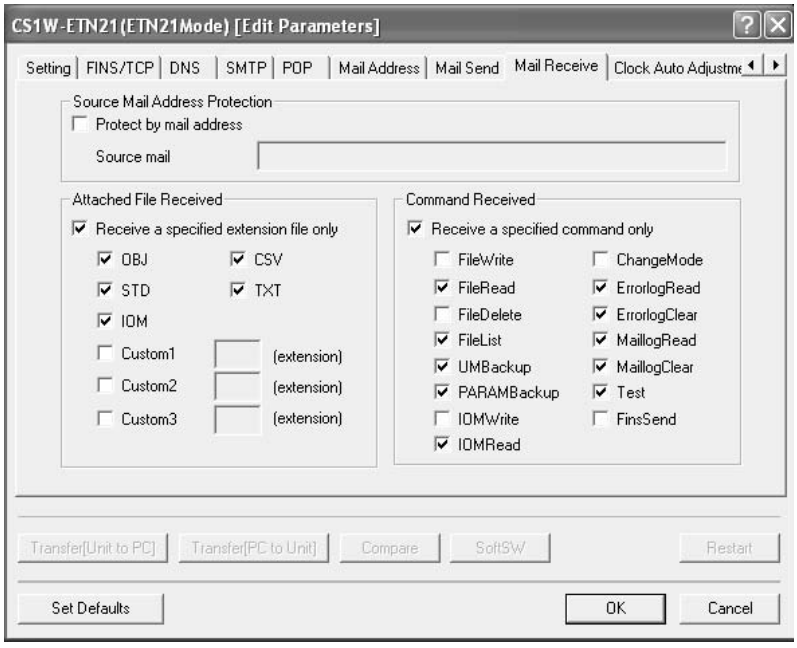

Posting Mail Address Protection Setting

Item	Contents	Default
Protect using mail address	Select this option when you do not want to receive mail from addresses other than the specified address(es). Set the allowed source e-mail address in the *Mail address* field.	Not selected
Mail address	Set a source e-mail address here when blocking e-mails from sources other than this address. E-mails will not be accepted from e-mail addresses other than the one(s) entered here. The mail address entry can be up to 50 characters long. More than one e-mail address can be entered by separating the addresses with commas.	None

Receive Attached File Setting

Item	Contents	Default
Receive file with specified extension only	Select this option when you do not want to receive attached files other than the specified file types (filename extensions). Multiple extensions can be selected.	Selected
OBJ	Select this option to accept files with the ".OBJ" extension. OBJ files contain all of the cyclic task and interrupt task programs in the CPU Unit and can be created using the CX-Programmer.	Selected
STD	Select this option to accept files with the ".STD" extension. STD files contain the PLC Setup, registered I/O tables, routing tables, Unit Setups, etc., and can be read from the CPU Unit using the CX-Programmer.	
IOM	Select this option to accept files with the ".IOM" extension. IOM files contain bit data from the beginning to the end of a CPU Unit data area and can be created using the CX-Programmer.	
CSV	Select this option to accept files with the ".CSV" extension. CSV files be created with applications such as MS Excel.	
TXT	Select this option to accept text files with the ".TXT" extension.	
Custom 1 to 3	Select these options to accept files with the user-specified filename extension.	Not selected

Receive Command Setting

Item	Contents	Default
Receive specified commands only	Select this option when you want only the specified commands to be executed.	Selected
FileWrite	Select when you want to execute the File Write command.	Not selected
FileRead	Select when you want to execute the File Read command.	Selected
FileDelete	Select when you want to execute the File Delete command.	Not selected
FileList	Select when you want to execute the File List Read command.	Selected
UMBackup	Select when you want to execute the User Memory Backup command.	Selected
PARAMBackup	Select when you want to execute the Parameter Area Backup command.	Selected
IOMWrite	Select when you want to execute the I/O Memory Write command.	Not selected
IOMRead	Select when you want to execute the I/O Memory Read command.	Selected
ChangeMode	Select when you want to execute the Operating Mode Change command.	Not selected
ErrorLogRead	Select when you want to execute the Error Log Read command.	Selected
ErrorLogClear	Select when you want to execute the Error Log Clear command.	Selected
MailLogRead	Select when you want to execute the Mail Log Read command.	Selected

Item	Contents	Default
MailLogClear	Select when you want to execute the Mail Log Clear command.	Selected
Test	Select when you want to execute the Mail Test command.	Selected
FinsSend	Select when you want to execute the FINS Command Send command.	Not selected

3-4 Remote Mail Command Details

3-4-1 Format

Command Format

To: etn@omron.co.jp
Enter the Ethernet Unit's local mail address.

CC:

Subject: FileWrite
Enter the command name.

Body:
```
Para1: MEMCARD ¥user
Para2: Overwrite=OK
#Overwrite OK
```
Enter the command's parameters, as follows.
Note: Enter standard US-ASCII characters only.
· Identify the parameter number at the beginning as ParaXX.
· Enter each parameter on a separate line.
· Enter any comments after the "#" character.

Attached file: Write.iom(98KB)
Attach a file when required.

Response Format

To: Command@omron.com
Returns response to the originating e-mail address.

CC:

Subject: Re:FileWrite
The command name will be returned after "Re:".

Body:
```
Response Code:0000
Response Status: Normal end

>Para1:MEMCARD ¥user
>Para2:Overwrite=OK
>#Overwrite OK
>-----(Attached File was deleted)----
```
Response information will be returned in the following order:
· The response code will be returned after "Response Code:".
· The response status will be returned after "Response Status:".
· The original e-mail's parameters are returned after ">" characters.
· The original e-mail's attached file will be deleted.

Attached file: Read.iom(98KB)
A file will be attached if the response requires an attached file.

FileWrite (File Write)

Function

Writes the attached file to the CPU Unit's EM file memory or a Memory Card mounted in the CPU Unit.

Command Format

Subject: `FileWrite`

	Notation	Description	Omission
Body:	`Para1:`*`Destination folder name`* Example) Specifying subdirectory OMRON in the Memory Card: `Para1:MEMCARD\OMRON`	Specifies the destination folder. • `MEMCARD` specifies the Memory Card's root directory. • `EM` specifies the EM file memory's root directory. **Note** If this parameter is omitted, the default write destination is the Memory Card's root directory.	Can be omitted.

	`Para2:Overwrite=OK or NG`
	Example)
	Allowing existing file to be overwritten:
	`Para2:Overwrite=OK`
		Specifies whether or not an existing file may be overwritten.
		• To allow an existing file with the same filename to be overwritten, enter “Overwrite=OK.”
		• To prevent an existing file with the same filename from being overwritten, enter “Overwrite=NG.”
		Note If this parameter is omitted, overwriting is prohibited.
			Can be omitted.

Attached file:	*`Any file`*	Any file (up to 1 MB) can be attached. **Note** The file can be up to 1 MB in size. **Note** If the Receive file with specified extension only Option is selected in the **Receive Mail** Tab, only files with the specified filename extensions can be written.	Cannot be omitted.

Response Format

Subject: `Re: FileWrite`

	Response contents	Description
Body:	`Response Code:`□□□□	Refer to *3-4-2 Response List*.
	`Response Status:`□□□□	Refer to *3-4-2 Response List*.
	`> Para1:`*`Destination folder name`*	Included only if this parameter was specified.
	`> Para2:Overwrite=OK or NG`	Included only if this parameter was specified.

Attached file: `None`

FileRead (File Read)

Function

Reads any file from the CPU Unit's EM file memory or a Memory Card mounted in the CPU Unit and returns the file as an attachment.

Command Format

Subject: `FileRead`

	Notation	Description	Omission
Body:	`Para1:`*`Source folder name`* Example) Specifying subdirectory OMRON in the Memory Card: `Para1:MEMCARD\OMRON`	Specifies the source folder. • `MEMCARD` specifies the Memory Card's root directory. • `EM` specifies the EM file memory's root directory. **Note** If this parameter is omitted, the default read source is the Memory Card's root directory.	Can be omitted.
	`Para2:`*`File name`* Example) Specifying AUTOEXEC.STD: `Para2:AUTOEXEC.STD`	Specifies the name of the file (including the filename extension) to be read. **Note** If this parameter is omitted, a parameter error will occur.	Cannot be omitted.

Attached file: `None`

Response Format

Subject: `Re:FileRead`

	Response contents	Description
Body:	`Response Code:`□□□□	Refer to *3-4-2 Response List*.
	`Response Status:`□□□□	Refer to *3-4-2 Response List*.
	`> Para1:`*`Source folder name`*	Included only if this parameter was specified.
	`> Para2:`*`File name`*	

Attached file: `Yes`

FileDelete (File Delete)

Function

Deletes the specified file from the CPU Unit's EM file memory or a Memory Card mounted in the CPU Unit.

Command Format

Subject: `FileDelete`

	Notation	Description	Omission
Body:	`Para1:`*`Folder name`* Example) Specifying subdirectory OMRON in the Memory Card: `Para1:MEMCARD\OMRON`	Specifies the folder containing the file to be deleted. • `MEMCARD` specifies the Memory Card's root directory. • `EM` specifies the EM file memory's root directory. **Note** If this parameter is omitted, the default directory is the Memory Card's root directory.	Can be omitted.
	`Para2:`*`File name`* Example) Specifying AUTOEXEC.STD: `Para2:AUTOEXEC.STD`	Specifies the name of the file (including the filename extension) to be deleted. **Note** If this parameter is omitted, a parameter error will occur. **Note** If the Receive file with specified extension only Option is selected in the **Receive Mail** Tab, only files with the specified filename extensions can be deleted.	Cannot be omitted.

Attached file: `None`

Response Format

Subject: `Re:FileDelete`

	Response contents	Description
Body:	`Response Code:`□□□□	Refer to *3-4-2 Response List*.
	`Response Status:`□□□□	Refer to *3-4-2 Response List*.
	`> Para1:`*`Folder name`*	Included only if this parameter was specified.
	`> Para2:`*`File name`*	

Attached file: `None`

FileList (File List Read)

Function

Returns a list of the files contained in the specified folder in the CPU Unit's EM file memory or a Memory Card mounted in the CPU Unit.

Command Format

Subject: `FileList`

	Notation	Description	Omission
Body:	`Para1:`*`Source folder name`* Example) Specifying subdirectory OMRON in the Memory Card: `Para1:MEMCARD\OMRON`	Specifies the source folder containing the files that will be listed. **Note** If this parameter is omitted, the default source directory is the Memory Card's root directory.	Can be omitted.

Attached file: `None`

Response Format Details

Subject: `Re:FileList`

	Response contents	Description
Body:	`Response Code:`□□□□	Refer to *3-4-2 Response List*.
	`Response Status:`□□□□	Refer to *3-4-2 Response List*.
	``` ---------- Directory Path: \omron [A = Archive file , D = sub -Directory] [V = Volume label , S = System file] [H = Hidden file , R = Read -only file] (FILENAME) (DATE) (FILESIZE) (ATTRI B) . 2003/06/12 17:15:17 0 _D___ .. 2003/06/12 17:15:17 0 _D___ AUTOEXEC.OBJ 2003/06/12 17:19:07 2672 A____ AUTOEXEC.STD 2003/06/12 17:19:10 16048 A____ ---- End of File List ---------- ```	File list • `Directory Path:` Name of folder containing listed files • `(FILENAME)` File name • `(DATE)` Date that file was last updated • `(FILESIZE)` File size in bytes • `(ATTRIB)` File attributes `A:` Archive file `D:` Directory (folder) `V:` Volume label `S:` System file `H:` Hidden file `R:` Read-only file
	`> Para1:`*`Source folder name`*	Included only if this parameter was specified.

Attached file: `None`

UMBackup (User Memory Backup)

Function

Backs up (saves) the CPU Unit's user program in the CPU Unit's EM file memory or a Memory Card mounted in the CPU Unit.

Command Format Details

Subject: `UMBackup`

	Notation	Description	Omission
Body:	`Para1:`*`Destination folder name`* Example) Specifying subdirectory `OMRON` in the Memory Card: `Para1:MEMCARD\OMRON`	Specifies the destination folder in which the user program will be saved. • `MEMCARD` specifies the Memory Card's root directory. • `EM` specifies the EM file memory's root directory. **Note** If this parameter is omitted, the default destination is the Memory Card's root directory.	Can be omitted.

	`Para2:File name`
	
	Example)
	Specifying USER.OBJ:
	`Para2:USER.OBJ`
		Specifies the name of the file in which the user program data will be saved.
		Note If this parameter is omitted, the default file name is `AUTOEXEC.OBJ`.
			Can be omitted.

	`Para3:Overwrite=OK or NG`
	
	Example)
	Allowing existing file to be overwritten:
	`Para3:Overwrite=OK`
		Specifies whether or not an existing file may be overwritten.
		• To allow an existing file with the same filename to be overwritten, enter "`Overwrite=OK`".
		• To prevent an existing file with the same filename from being overwritten, enter "`Overwrite=NG`".
		Note If this parameter is omitted, overwriting is prohibited.
			Can be omitted.

Attached file: `None`

Response Format

Subject: `Re:UMBackup`

	Response contents	Description
Body:	`Response Code:`□□□□	Refer to *3-4-2 Response List*.
	`Response Status:`□□□□	Refer to *3-4-2 Response List*.
	`> Para1:`*`Destination folder name`*	Included only if this parameter was specified.
	`> Para2:`*`File name`*	Included only if this parameter was specified.
	`> Para3:Overwrite=OK or NG`	Included only if this parameter was specified.

Attached file: `None`

PARAMBackup (Parameter Area Backup)

Function

Backs up (saves) the parameter area data in the CPU Unit's EM file memory or a Memory Card mounted in the CPU Unit.

Command Format

Subject: `PARAMBackup`

Body:

Notation	Description	Omission
`Para1:`*`Destination folder name`* Example) Specifying subdirectory `OMRON` in the Memory Card: `Para1:MEMCARD\OMRON`	Specifies the destination folder in which the user program will be saved • `MEMCARD` specifies the Memory Card's root directory. • `EM` specifies the EM file memory's root directory. **Note** If this parameter is omitted, the default destination is the Memory Card's root directory.	Can be omitted.
`Para2:`*`File name`* Example) Specifying USER.STD: `Para2:USER.STD`	Specifies the name of the file in which the parameter area data will be saved. **Note** If this parameter is omitted, the default file name is `AUTOEXEC.STD`.	Can be omitted.

`Para3:Overwrite=OK or NG`
 	
Example)
Allowing existing file to be overwritten:
`Para3:Overwrite=OK`
	Specifies whether or not an existing file may be overwritten.
	• To allow an existing file with the same filename to be overwritten, enter "`Overwrite=OK`".
	• To prevent an existing file with the same filename from being overwritten, enter "`Overwrite=NG`".
	Note If this parameter is omitted, overwriting is prohibited.
		Can be omitted.

Attached file: `None`

Response Format

Subject: `Re:PARAMBackup`

Body:

Response contents	Description
`Response Code:`□□□□	Refer to *3-4-2 Response List*.
`Response Status:`□□□□	Refer to *3-4-2 Response List*.
`> Para1:`*`Destination folder name`*	Included only if this parameter was specified.
`> Para2:`*`File name`*	Included only if this parameter was specified.
`> Para3:Overwrite=OK or NG`	Included only if this parameter was specified.

Attached file: `None`

IOMWrite (I/O Memory Write)

Function

Writes the contents of the attached file to the specified data area in the CPU Unit's I/O memory. The data is written in word units.

Command Format

Subject: `IOMWrite`

	Notation	Description	Omission
Body:	`Para1:`*`File format`* Example) Specifying a file of comma-delimited word data with returns every 16 fields: `Para1:3D`	The file format is specified with two digits, as follows: `Para1: ①②` ① Data format `0:` Binary (.IOM) `1:` Non-delimited words (.TXT) `2:` Non-delimited double words (.TXT) `3:` Comma-delimited words (.CSV) `4:` Comma-delimited double words (.CSV) `5:` Tab-delimited words (.TXT) `6:` Tab-delimited double words (.TXT) ② Carriage returns `0:` No returns `8:` Return every 10 fields `9:` Return every 1 field `A:` Return every 2 fields `B:` Return every 4 fields `C:` Return every 5 fields `D:` Return every 16 fields **Note** If this parameter is omitted, a parameter error will occur.	Cannot be omitted.
	`Para2:`*`Starting write address`* Example) Specifying D00100 as the starting address: `Para2:D_100`	Specify the data area and address as follows: • CIO Area: `CH_0` to `CH_6143` • Work Area: `W_0` to `W_511` • Holding Area: `H_0` to `H_511` • Auxiliary Area: `A_0` to `A_447` • Timer Area: `T_0` to `T_4095` • Counter Area: `C_0` to `C_4095` • DM Area: `D_0` to `D_32767` • EM Area (current EM bank): `E_0` to `E_32767` • EM Area (EM bank 0): `E0_0` to `E0_32767` • EM Area (EM bank 1): `E1_0` to `E1_32767` • EM Area (EM bank 2): `E2_0` to `E2_32767` • EM Area (EM bank 3): `E3_0` to `E3_32767` • EM Area (EM bank 4): `E4_0` to `E4_32767` • EM Area (EM bank 5): `E5_0` to `E5_32767` • EM Area (EM bank 6): `E6_0` to `E6_32767` • EM Area (EM bank 7): `E7_0` to `E7_32767` • EM Area (EM bank 8): `E8_0` to `E8_32767` • EM Area (EM bank 9): `E9_0` to `E9_32767` • EM Area (EM bank A): `EA_0` to `EA_32767` • EM Area (EM bank B): `EB_0` to `EB_32767` • EM Area (EM bank C): `EC_0` to `EC_32767` **Note** If this parameter is omitted, a parameter error will occur.	Cannot be omitted.
Attached file:	`Yes`	Attach an I/O data file (IOM, CSV, or TXT format). **Note** Up to 6,000 words can be written from the data file. Attach a file with 6,000 or fewer words of data. **Note** Only a file with the IOM, CSV, or TXT can be written to I/O memory. Files with any other filename extension cannot be written to I/O memory regardless of the allowed file settings set in the **Receive Mail** Tab.	Cannot be omitted.

Response Format

Subject: `Re:IOMWrite`

Body:

Response contents	Description
`Response Code:`□□□□	Refer to *3-4-2 Response List*.
`Response Status:`□□□□	Refer to *3-4-2 Response List*.
`> Para1:`*`File format`*	
`> Para2:`*`Starting write address`*	
`> Para3:Overwrite=OK or NG`	Included only if this parameter was specified.

Attached file: `None`

IOMRead (I/O Memory Read)

Function

Reads the contents of the specified range of words from the CPU Unit's I/O memory and returns the data in an attached file. The data is read in word units.

Command Format

Subject: `IOMRead`

	Notation	Description	Omission
Body:	`Para1:`*`File format`* Example) Specifying a file of comma-delimited word data with returns every 16 fields: `Para1:3D`	The file format is specified with two digits, as follows: `Para1:` ①② ① Data format `0:` Binary (.IOM) `1:` Non-delimited words (.TXT) `2:` Non-delimited double words (.TXT) `3:` Comma-delimited words (.CSV) `4:` Comma-delimited double words (.CSV) `5:` Tab-delimited words (.TXT) `6:` Tab-delimited double words (.TXT) ② Carriage returns `0:` No returns `8:` Return every 10 fields `9:` Return every 1 field `A:` Return every 2 fields `B:` Return every 4 fields `C:` Return every 5 fields `D:` Return every 16 fields **Note** If this parameter is omitted, a parameter error will occur.	Cannot be omitted.
	`Para2:`*`Starting read address`* Example) Specifying D00100 as the starting address: `Para2:D_100`	Specify the data area and address as follows: • CIO Area: `CH_0` to `CH_6143` • Work Area: `W_0` to `W_511` • Holding Area: `H_0` to `H_511` • Auxiliary Area: `A_0` to `A_447` • Timer Area: `T_0` to `T_4095` • Counter Area: `C_0` to `C_4095` • DM Area: `D_0` to `D_32767` • EM Area (current EM bank): `E_0` to `E_32767` • EM Area (EM bank 0): `E0_0` to `E0_32767` • EM Area (EM bank 1): `E1_0` to `E1_32767` • EM Area (EM bank 2): `E2_0` to `E2_32767` • EM Area (EM bank 3): `E3_0` to `E3_32767` • EM Area (EM bank 4): `E4_0` to `E4_32767` • EM Area (EM bank 5): `E5_0` to `E5_32767` • EM Area (EM bank 6): `E6_0` to `E6_32767` • EM Area (EM bank 7): `E7_0` to `E7_32767` • EM Area (EM bank 8): `E8_0` to `E8_32767` • EM Area (EM bank 9): `E9_0` to `E9_32767` • EM Area (EM bank A): `EA_0` to `EA_32767` • EM Area (EM bank B): `EB_0` to `EB_32767` • EM Area (EM bank C): `EC_0` to `EC_32767` **Note** If this parameter is omitted, a parameter error will occur.	Cannot be omitted.
	`Para3:`*`Number of words`* Example) Specifying 50 words: `Para3:50`	Specifies the number of words (1 to 6,000) to read. **Note** Up to 6,000 words can be read to the attached file. Specify 6,000 or fewer words for the number of words to read. **Note** If this parameter is omitted, a parameter error will occur.	Cannot be omitted.

Para4:*File name* Example) Specifying MEMORY.TXT: Para4:MEMORY.TXT	Specifies the name of the file (including the file-name extension) in which the read data will be stored. **Note** Only filename extensions IOM, CSV, and TXT can be used. Other filename extensions cannot be specified. **Note** If this parameter is omitted, the file will be saved as BACKUP.IOM, BACKUP.TXT, or BACKUP.CSV.	Can be omitted.

Attached file: None

Response Format

Subject: Re:IOMRead

Body:

Response contents	Description
Response Code:□□□□	Refer to *3-4-2 Response List*.
Response Status:□□□□	Refer to *3-4-2 Response List*.
> Para1:*File format*	
> Para2:*Starting read address*	
> Para3:*Number of words*	
> Para4:*File name*	Included only if this parameter was specified.

Attached file: Yes

ChangeMode (Operating Mode Change)

Function Changes the CPU Unit's operating mode.

Command Format

Subject: `ChangeMode`

	Notation	Description	Omission

Body:	`Para1:RUN (or MON or PRG)`
	
	Example)
	Changing to RUN mode:
	`Para1:RUN`
		Changes the CPU Unit's operating mode.
		• To change to `RUN` mode, enter `RUN`.
		• To change to MONITOR mode, enter `MON`.
		• To change to PROGRAM mode, enter `PRG`.
		Note If this parameter is omitted, a parameter error will occur.
			Cannot be omitted.

Attached file: `None`

Response Format

Subject: `Re:ChangeMode`

	Response contents	Description
Body:	`Response Code:`□□□□	Refer to *3-4-2 Response List*.
	`Response Status:`□□□□	Refer to *3-4-2 Response List*.
	`> Para1:RUN (or MON or PRG)`	

Attached file: `None`

ErrorLogRead (Error Log Read)

Function

Reads the entire error log from the CPU Unit or a specified Special Unit (CPU Bus Unit or Special I/O Unit).

Command Format

Subject: `ErrorLogRead`

	Notation	Description	Omission
Body:	`Para1:`*`Unit address`* Example) Specifying a CPU Bus Unit (unit number 0): `Para1:10`	Specifies the unit address of the Unit from which the error log will be read. **Note** If this parameter is omitted, a parameter error will occur.	Cannot be omitted.

Attached file: `None`

Response Format

Subject: `Re:ErrorLogRead`

	Response contents	Description
Body:	`Response Code:`□□□□	Refer to *3-4-2 Response List*.
	`Response Status:`□□□□	Refer to *3-4-2 Response List*.
	`> Para1:`*`Unit address`*	

Attached file: `None`

ErrorLogClear (Error Log Clear)

Function

Clears the entire error log from the CPU Unit or a specified Special Unit (CPU Bus Unit or Special I/O Unit).

Command Format

Subject: `ErrorLogClear`

Body:

Notation	Description	Omission
`Para1:`*`Unit address`* Example) Specifying a CPU Bus Unit (unit number 0): `Para1:10`	Specifies the unit address of the Unit from which the error log will be cleared. **Note** If this parameter is omitted, a parameter error will occur.	Cannot be omitted.

Attached file: `None`

Response Format

Subject: `Re:ErrorLogClear`

Body:

Response contents	Description
`Response Code:`□□□□	Refer to *3-4-2 Response List*.
`Response Status:`□□□□	Refer to *3-4-2 Response List*.
`> Para1:`*`Unit address`*	

Attached file: `None`

MailLogRead (Mail Log Read)

Function

Reads the mail log, which contains information on mail received by the Ethernet Unit. (The mail log contains basic information on all of the mail received since power was turned ON or the mail log was cleared.)

Command Format

Subject:	`MailLogRead`		
	Notation	Description	Omission
Body:	`None`	---	---
Attached file:	`None`		

Response Format

Subject:	`Re:MailLogRead`	
	Response contents	Description
Body:	`Response Code:`□□□□	Refer to *3-4-2 Response List*.
	`Response Status:`□□□□	Refer to *3-4-2 Response List*.
	`-- (Mail Log List) --`	The mail log list read from the Ethernet Unit is returned in the body of the response e-mail. The mail log entries contain the following information: • Source e-mail address • Received command • Date/time of reception
Attached file:	`None`	

MailLogClear (Mail Log Clear)

Function

Clears the mail log, which contains information on mail received by the Ethernet Unit.

Command Format

Subject:	`MailLogClear`		
	Notation	Description	Omission
Body:	`None`	---	---
Attached file:	`None`		

Response Format

Subject:	`Re:MailLogClear`	
	Response contents	Description
Body:	`Response Code:`□□□□	Refer to *3-4-2 Response List*.
	`Response Status:`□□□□	Refer to *3-4-2 Response List*.
Attached file:	`None`	

Test (Mail Test)

Function

Performs an e-mail send/receive test with the Ethernet Unit.

When this remote mail command is executed, the Ethernet Unit returns a response to the address that sent the remote mail command.

Command Format

Subject:	Test		
	Notation	Description	Omission
Body:	None	---	---
Attached file:	None		

Response Format

Subject:	Re:Test	
	Response contents	Description
Body:	Response Code:□□□□	Refer to *3-4-2 Response List*.
	Response Status:□□□□	Refer to *3-4-2 Response List*.
Attached file:	None	

FinsSend (FINS Command Send)

Function Requests execution of the specified FINS command by the Ethernet Unit.

Command Format

Subject: `FinsSend`

	Notation	Description	Omission
Body:	`Para1:`*`FINS header`* Example) Specifying DNA=01, DA1=02, and DA2=00: `Para1:010200`	Enter the desired FINS header values for DNA, DA1, and DA2. **Note** If this parameter is omitted, a parameter error will occur.	Cannot be omitted.
	`Para2:`*`Command code and parameter`* Example) Specifying 0501: `Para2:0501*`	Enter the command code and parameter. *: Always specify this as a terminator. **Note** If this parameter is omitted, a parameter error will occur.	Cannot be omitted.

Attached file: `None`

Response Format

Subject: `Re:FinsSend`

	Response contents	Description
Body:	`Response Code:`□□□□	Refer to *3-4-2 Response List*.
	`Response Status:`□□□□	Refer to *3-4-2 Response List*.
	`-- (FINS header) --`	The FINS response is entered in the e-mail body.
	`-- (Response data) --`	The FINS response is entered in the e-mail body.

Attached file: `None`

3-4-2 Response List

Response Code	Response Status	Description
0000	Normal completion	Command completed normally.
F101	E-mail size exceeds than the maximum size.	The e-mail is too large.
F102	E-mail address error	Specified e-mail address is invalid.
F103	Invalid command	Specified command is invalid.
F104	Protected (Command type)	Specified command is disabled in the protection settings.
F105	Invalid subject	Specified subject is invalid.
F201	Invalid parameter	Specified parameter is invalid.
F301	Decoding error	Decoding error
F302	Invalid attached file	Attached file is invalid.
F303	Attached file does not exist	No attached file

Response Code	Response Status	Description
F304	Protected (File extension)	Attached file type (filename extension) is disabled in the protection settings.
F305	File size exceeds than the maximum size.	Attached file is too large.
F4FF	Other Error	Other error

3-5 Mail Receive Function Status

3-5-1 Accessing Memory/Receiving Mail Flag

The Accessing Memory/Receiving Mail Flag is located in CIO Area words allocated to the Ethernet Unit as a CPU Bus Unit.

The leading address (n) of the allocated CIO area is determined by the Ethernet Unit's unit number (n = CIO 1500 + 25 × unit number).

Accessing Memory/ Receiving Mail Flag (Bit 02 of n+17)

When the mail receive function receives a FileWrite, FileRead, FileDelete, FileList, IOMWrite, or IOMRead command, the Ethernet Unit will access the CPU Unit's I/O memory and automatically create a data file. The Accessing Memory/Receiving Mail Flag (bit 02 of n+17) will be ON while the CPU Unit's memory is being accessed.

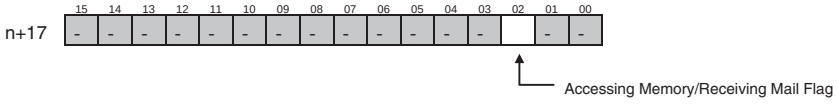

To maintain the uniformity of the data in the data file, use this flag as a condition for write operations in the ladder program to prevent the ladder program from overwriting the data while it is being converted to a data file.

3-6 I/O Memory Data Formats

IOM Format

When 5 words of hexadecimal I/O memory data (1234, 5678, 9ABC, etc.) are being copied to an attached file in IOM format, the data is stored in the attached file as shown in the following diagram.

Example: Binary data format with a return every 10 fields

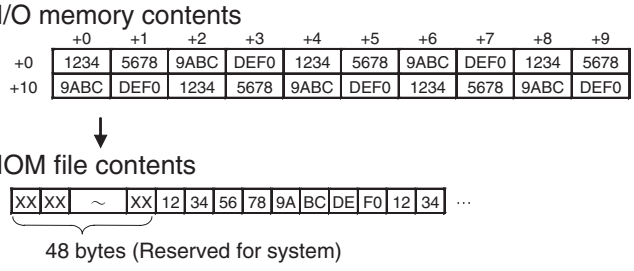

Note The IOM file format is compatible with the CPU Unit's READ DATA FILE and WRITE DATA FILE instructions (FREAD and FWRIT) set to binary data format.

TXT Format

When hexadecimal I/O memory data (1234, 5678, 9ABC, etc.) is being copied to an attached file in TXT format, the data is converted to ASCII in one-word fields or two-word fields. The fields (one-word or two-word) are delimited by tabs ([HT]: 09) and a return and line feed ([CR][LF]: 0D0A) are inserted after the specified number of fields.

Example: Tab-delimited words with a return every 10 fields

I/O memory contents

	+0	+1	+2	+3	+4	+5	+6	+7	+8	+9
+0	1234	5678	9ABC	DEF0	1234	5678	9ABC	DEF0	1234	5678
+10	9ABC	DEF0	1234	5678	9ABC	DEF0	1234	5678	9ABC	DEF0

TXT file contents

31	32	33	34	09	35	36	37	38	09	39	41	42	43	09	···
1	2	3	4	[HT]	5	6	7	8	[HT]	9	A	B	C	[HT]	···
···	35	36	37	38	0D	0A	39	41	42	43	09	···			
···	5	6	7	8	[CR]	[LF]	9	A	B	C	[HT]	···			

↓

Contents of TXT file when displayed

```
1234□5678□9ABC□DEF0□1234□5678□9ABC□DEF0□1234□5678□
9ABC□DEF0□1234□5678□9ABC□DEF0□1234□5678□9ABC□DEF0
```

The □ character represents a hard tab and is displayed as a tab in text displays.

Note The TXT file format is compatible with the CPU Unit's READ DATA FILE and WRITE DATA FILE instructions (FREAD and FWRIT) set to tab-delimited data.

CSV Format

When hexadecimal I/O memory data (1234, 5678, 9ABC, etc.) is being copied to an attached file in CSV format, the data is converted to ASCII in one-word fields or two-word fields. The fields (one-word or two-word) are delimited by commas (","): 2C) and a return and line feed ([CR][LF]: 0D0A) are inserted after the specified number of fields.

Example: Comma-delimited words with a return every 10 fields

I/O memory contents

	+0	+1	+2	+3	+4	+5	+6	+7	+8	+9
+0	1234	5678	9ABC	DEF0	1234	5678	9ABC	DEF0	1234	5678
+10	9ABC	DEF0	1234	5678	9ABC	DEF0	1234	5678	9ABC	DEF0

CSV file contents

31	32	33	34	2C	35	36	37	38	2C	39	41	42	43	2C	···
1	2	3	4	,	5	6	7	8	,	9	A	B	C	,	···
···	35	36	37	38	0D	0A	39	41	42	43	2C	···			
···	5	6	7	8	[CR]	[LF]	9	A	B	C	,	···			

↓

Contents of CSV file when displayed

```
1234,5678,9ABC,DEF0,1234,5678,9ABC,DEF0,1234,5678,
9ABC,DEF0,1234,5678,9ABC,DEF0,1234,5678,9ABC,DEF0
```

Note The CSV file format is compatible with the CPU Unit's READ DATA FILE and WRITE DATA FILE instructions (FREAD and FWRIT) set to comma-delimited data.

3-7 Attached File Transfer Times

When sending an attached file with the Mail Receive Function, the access time can be as long as 30 or 40 minutes for a very large file. The following tables show how long the CPU Unit's memory will be accessed by the Ethernet Unit (how long the Accessing Memory/Receiving Mail Flag will be ON).

Access Times for CS1 and CJ1 CPU Units

Command	Data size	CPU Unit's operating mode	
		PROGRAM	RUN
		---	10 ms cycle time
FileWrite	1 KB	0.3 s	1.6 s
	10 KB	1.5 s	9.3 s
	100 KB	13.7 s	90.4 s
	1 MB	160.1 s	1125.4 s
FileRead	1 KB	0.2 s	0.9 s
	10 KB	1.0 s	6.3 s
	100 KB	9.2 s	65.9 s
	1 MB	135.2 s	1132.0 s
IOMWrite	1 word	0.1 s	0.1 s
	6,000 words	0.2 s	0.3 s
IOMRead	1 word	0.1 s	0.1 s
	6,000 words	0.2 s	0.3 s

Access Times for CS1-H and CJ1-H CPU Units

Command	Data size	CPU Unit's operating mode	
		PROGRAM	RUN
		---	10 ms cycle time
FileWrite	1 KB	0.2 s	0.4 s
	10 KB	0.9 s	2.6 s
	100 KB	9.0 s	25.7 s
	1 MB	90.5 s	302.8 s
FileRead	1 KB	0.1 s	0.3 s
	10 KB	0.4 s	1.8 s
	100 KB	4.0 s	17.8 s
	1 MB	48.4 s	272.0 s
IOMWrite	1 word	0.1 s	0.1 s
	6,000 words	0.1 s	0.2 s
IOMRead	1 word	0.1 s	0.1 s
	6,000 words	0.1 s	0.2 s

Note

(1) The access times for FileWrite and FileRead commands indicate Memory Card access times.

(2) The access times in the tables above are standard times when the PLC Setup's “Fixed Peripheral Servicing Time” setting is set to the default value of 4% of the cycle time.

(3) The attached file transfer time can be reduced by increasing the time allowed for peripheral servicing in the PLC Setup's “Fixed Peripheral Servicing Time” setting.

3-8 Mail Receive Function Errors

3-8-1 Identifying and Correcting Mail Receive Function Errors

The following table shows the primary causes of e-mail transmission errors and corresponding solution.

Cause	Correction
• The POP, SMTP, or DNS server address has not been set.	• Correctly set each server address (IP address or host name).
• POP authentication error	• Correctly set the POP settings (account and password).
• POP, SMTP, or DNS server communications timeout	• Inspect the communications path (Ethernet Unit, cable connections, hub, router, and server) and correct any problems or damage.
• Local mail address has not been set.	• Correctly set the local mail address.
• The attached file's file name is not entered in standard ASCII (8 characters max.). • The attached file's filename extension is not entered in standard ASCII (3 characters).	• Correctly set the attached file's file name and extension in ASCII characters.
• Specified word or specified bit data area/address error	• Correctly set the data area and address for the specified word or bit.

3-8-2 Troubleshooting Mail Receive Errors with LED Indicators

RUN	ERC	ERH	LNK	HOST	Probable cause	Correction
Lit	---	Lit	---	Flashing	• There is an error in the server (DNS, SMTP, or POP3) settings in the Unit Setup.	• Read the Error Status Flags and error log and correct the setting that caused the error. If the error recurs, replace the CPU Unit.
		Not lit	---	Flashing	• An authentication error occurred in with the POP server. A communications problem occurred with the server. • A network failure occurred in the communications path and caused an access timeout.	• Correctly set the POP settings (account and password). • Inspect the communications path (Ethernet Unit, cable connections, hub, router, and server) and correct any problems or damage.

Note For more details on the error log, refer to *8-3 Error Log* in the *Operation Manual Construction of Networks.*

3-8-3 Error Log Codes Related to the Mail Receive Function

If an error occurs while the Ethernet Unit is operating, the main error code, detailed error code, and time stamp will be recorded in the error log.

The contents of the error log can be read by sending a FINS command to the Ethernet Unit or sending the ErrorLogRead command through e-mail.

Error code (Hex)	Meaning	Detailed error code		Correction	EEPROM
		1st byte	2nd byte		
021A	Logic error in setting table	00	01: Data link table 02: Network parameters 03: Routing table 04: Unit Setup 05: CPU Bus Unit words (CIO or DM)	Correctly set the data indicated by the 2nd byte of the detailed error code.	Saved
03C1	Server setting error	00: DNS 01: SMTP 02: POP3 03: SNTP	01: IP address 02: Host name 03: Port number 04: Other parameter	Correctly set the server settings indicated by the detailed error code.	Not saved
03C4	Server connection error	00: DNS 01: SMTP 02: POP3 03: SNTP	01: Specified host not found 02: No service from specified host 03: Timeout 04: Connection closed unilaterally by host 05: Could not connect, account information invalid 06: Host name resolution error 07: Transmission error 08: Reception error 09: Other error	Take one of the following steps: • Correctly set the indicated server's settings. • Inspect the communications path (Ethernet Unit, cable connections, hub, router, and server) and correct any problems or damage.	Not saved
03C5	Mail maintenance function error	0000 to EFFF: FINS error response F101: Normal completion F101: E-mail too large F102: E-mail address error F103: Invalid command F104: Protected (Command type) F105: Invalid subject F201: Invalid parameter F301: Decoding error F302: Invalid attached file F303: Attached file does not exist F304: Protected (File extension) F305: Attached file too large		• Determine the cause of the error from the detailed error code, correct the problem, and send the command again.	Not saved

Note For more details on the error log, refer to *8-3 Error Log* in the *Operation Manual Construction of Networks* (W420).

3-9 Example Application

3-9-1 Step 1. Create the I/O Table

Mount the Ethernet Unit in the CPU Rack or Expansion Rack, connect online with the CX-Programmer or Programming Console, and create the I/O table.

3-9-2 Step 2. Make the Unit Setup Settings from the CX-Programmer

With the CX-Programmer connected online, select the Ethernet Unit in the CX-Programmer's PLC I/O Table Window, right-click and select Unit Setup from the popup menu. Make the following settings in the CPU Bus Unit Setup Area from the CPU Bus Unit Setup Window.

Local Mail Address (SMTP Tab)

Item name	Example
Local mail address	ETN21@omron.co.jp

Initial POP3 Server Settings (POP Tab)

Item name	Example
Server specification type	Host Name
Host name	mail.omron.com
Port No.	110
Account Name	omronID
Mail password	omronPS
Server access interval	5 minutes

- DNS Server IP Address Setting (DNS Tab, When Required)

Item name	Example
IP Address	10.6.57.11
Port No.	53
Retry timer	10

Initial Settings for the Mail Receive Function

Item name		Example
Posting Mail Address Protection Setting	Protect using mail address	Not selected
	Mail address	None
Receive Attached File Setting	Receive file with specified extension only	Not selected

Item name		Example
Receive Command Setting	Receive specified commands only	Selected
	FileWrite	Not selected
	FileRead	Selected
	FileDelete	Not selected
	FileList	Selected
	UMBackup	Selected
	PARAMBackup	Selected
	IOMWrite	Not selected
	IOMRead	Selected
	ChangeMode	Not selected
	ErrorLogRead	Selected
	ErrorLogClear	Selected
	MailLogRead	Selected
	MailLogClear	Selected
	Test	Selected
	FinsSend	Not selected

3-9-3 Step 3. Transfer the CPU Bus Unit Setup Settings

Select ***Transfer to PLC*** from the Options Menu and click the **Yes** Button. The settings will be transferred to the CPU Bus Unit Setup Area in the CPU Unit.

3-9-4 Step 4. Send Remote Mail Commands

Send e-mails containing remote mail commands to the Ethernet Unit.

Reading Data from a CPU Unit Data Area

Example)

In this example, 10 words of data are read from words D00100 to D00109 and converted to a file called D00100.CSV.

Subject: `IOMRead`

Body:
```
Para1:38
Para2:D_100
Para3:10
Para4: D00100.CSV
```

Attached file: `None`

Backing Up the CPU Unit's User Program in the Memory Card

Example)

In this example, the CPU Unit's user program is backed up in a file called USER.OBJ.

Subject: `UMBackup`

Body: `Para2:USER.OBJ`

Attached file: `None`

SECTION 4
FTP Server

This section describes the functions provided by the FTP server.

4-1 Overview 68
4-1-1 Specifications 68
4-2 FTP Server Function Details 69
4-2-1 File Types 69
4-2-2 Connecting to the FTP Server 69
4-3 Using the FTP Server Function 70
4-3-1 Procedure 70
4-3-2 List of Settings Required for the FTP Server Function 71
4-3-3 Setup Tab 71
4-4 FTP Server Application Example 72
4-5 Using FTP Commands 73
4-5-1 Table of Commands 73
4-5-2 Using the Commands 73
4-5-3 Error Messages and FTP Status 78
4-6 Checking FTP Status 79
4-6-1 FTP Status Flag 79
4-7 Using File Memory 80
4-7-1 File Memory 80
4-7-2 File Types 80
4-7-3 Initializing File Memory 82
4-7-4 I/O Memory Data Format 82
4-8 FTP File Transfer Time 85
4-9 UNIX Application Example 86

4-1 Overview

The Ethernet Unit has a built-in FTP (File Transfer Protocol) server function, so other computers on the Ethernet can read or write (upload/download) large files in the EM file memory by executing FTP commands from the FTP client software.

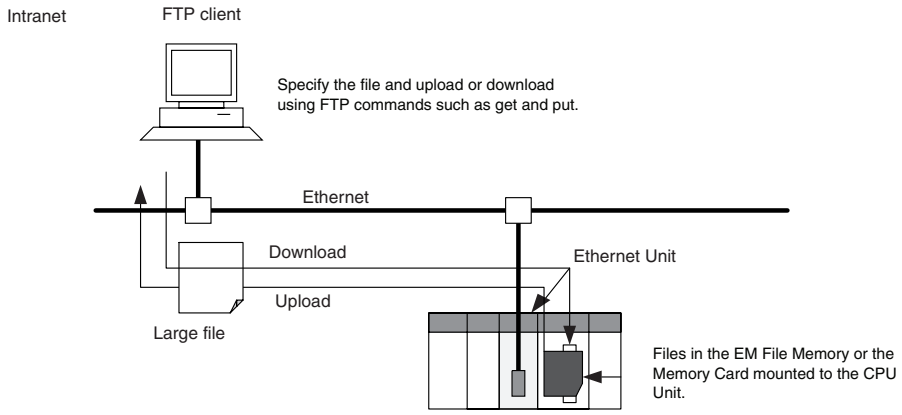

Note Only one FTP client can connect at the same time.

4-1-1 Specifications

Item	Specification
Executable commands	`open`: Connects the specified host FTP server. `user`: Specifies user name for the remote FTP server. `ls`: Displays the Memory Card file names. `dir`: Display the Memory Card file names and details. `rename`: Changes a file name. `mkdir`: Creates a new directory in the working directory in the remote host. `rmdir`: Deletes a new directory from the working directory in the remote host. `cd`: Changes the Ethernet Unit work directory to the specified directory. `cdup`: Changes the working directory at the remote host to the parent directory. `pwd`: Displays the Ethernet Unit work directory. `type`: Specifies the data type of transferred files. `get`: Transfers the specified file from the Memory Card to the local host. `mget`: Transfers multiple files from the Memory Card to the local host. `put`: Transfers the specified local file to the Memory Card. `mput`: Transfers multiple local files to the Memory Card. `delete`: Deletes the specified file from the Memory Card. `mdelete`: Deletes multiple files from the Memory Card. `close`: Disconnects the FTP server. `bye`: Closes the FTP (client). `quit`: Closes the FTP (client).
Protection	FTP login name consists of 12 letters max. CONFIDENTIAL is the default login name. Password consists of 8 characters max.
Protocol	FTP (port number: 21/TCP)
Number of connections	1

Note The PLC, however, is unable to read or write files at other nodes using FTP because the Ethernet Unit does not support FTP client functions.

4-2 FTP Server Function Details

4-2-1 File Types

The file system in the CPU Unit that can be accessed by the Ethernet Unit includes files in any Memory Card mounted in the CPU Unit and files in the EM file memory. The directory tree is shown below.

```
/:                  root
├── MEMCARD:        Memory card directory
└── EM:             EM file memory directory
```

A connection will be initially made to the root directory.

Note
1. The date of the MEMCARD directory displayed for ls or dir commands in the root directory will be the date of the file system volume label.
2. The login date will be displayed for EM files and for MEMCARD if a volume label has not been created.

4-2-2 Connecting to the FTP Server

The host computer must connect to the FTP server before the FTP server functions can be used. The login name and password set in the Unit Setup will be used when connecting. The default FTP login name is “CONFIDENTIAL” and no password is required.

The FTP server in the Ethernet Unit can connect to only one client at a time. If a client attempts to connect when the FTP server is in use, a message will be returned and connection will be refused.

Note When general-purpose FTP software is used, files can be transferred and read using a graphical user interface similar to Explorer.

Login Name and Password Setting

The default login name for FTP is “CONFIDENTIAL” and no password is set for the default login, so login is possible by simply entering “CONFIDENTIAL” as the login name. A user-set login name and password can also be set in the User Setup (CPU Bus Unit System Setup).

Login Messages

Status	Message
Normal connection	`220 xxx.xx.xx.xx yyyyyyyyyy FTP server (FTP Version z.zz) ready.` `xxx.xx.xx.xx:` IP address of Ethernet Unit `yyyyyyyyyy:` Ethernet Unit model number (CS1W-ETN21) `z.zz:` Firmware version of Ethernet Unit
FTP server busy	`221 FTP server busy, Goodbye.`

Setting Restrictions

The following restrictions apply to login names and passwords.

- The login name and password must consist of alphanumeric characters, hyphens, and/or underscores. They are not case sensitive.
- A login name consists of 12 characters.
- A password consists of 8 characters.
- Always set a password when setting a new login name. The login name will not be valid unless a password is set for it.

- If a login name is not set or contains illegal characters, the default login name, CONFIDENTIAL, must be used. No password is required and any password that is set will be ignored.

FTP File Transfer Mode

FTP has two file transfer modes: ASCII mode and binary mode. Before starting to transfer files, use the `type` command (specifies the data type of transferred files) to select the required mode.

Always select binary mode for binary files (extensions .IOM, .STD, or .OBJ) in the CS/CJ-series file memory and other program files (with extensions such as .CXP).

4-3 Using the FTP Server Function

4-3-1 Procedure

1. Make the basic settings.
   Refer to *SECTION 2 Installation and Initial Setup* in the *Operation Manual, Construction of Networks* (W420).

↓

2. When using a user-set FTP login name and password:
   With the CX-Programmer online, select the Ethernet Unit from the I/O Table Window in the CX-Programmer, right-click, and select ***Unit Setup*** to display the window for making the Ethernet Unit Setup. In the CPU Bus System Setup, set the FTP login name and FTP password.

↓

3. Select ***Transfer to PLC*** from the Options Menu and click the **Yes** Button. The setting data will be transferred to the CPU Bus Unit System Setup Area in the CPU Unit.

↓

4. When reading from and writing to the Memory Card:
   Mount the Memory Card into the CPU Unit.

↓

5. Connect the Ethernet Unit using the FTP client software.

↓

6. Enter the FTP login name and password set in the Unit Setup and log into the Ethernet Unit.
   Note: Once logged in, the ftp commands can be used, such as cd (Change Directory), and get (Obtain File).

↓

7. Search in the following directories for the required file in the Memory Card mounted to the CPU Unit or the EM File Memory.
   File memory type: Directory
   Memory Card: \MEMCARD
   EM File Memory: \EM

↓

8. Download the files.

↓

9. Exit the connection.

Note The Ethernet Unit will be restarted when the settings data is transferred to the CPU Bus Unit System Setup Area, so that the new settings are read and

become effective. Verify that it is safe for the Ethernet Unit to restart before transferring the settings data.

4-3-2 List of Settings Required for the FTP Server Function

Make the following settings for the unit setup when the server function is used.

CX-Programmer tab	Settings	Setting conditions	Page
Setup	Login	User-set (when the default, CONFIDENTIAL, is not used)	71
	Password	User-set	
	Port No.	Rarely required (when the default, 21, is not used)	

4-3-3 Setup Tab

The CPU Bus Unit System Setup, which is set when using the FTP server function, is shown in the CX-Programmer's Unit Setup Window.

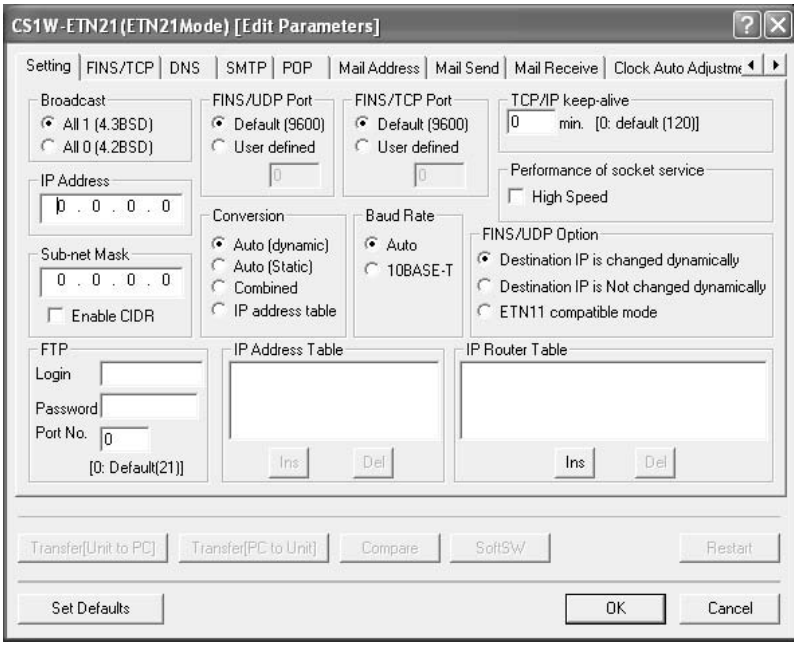

■ **Settings**

Setting	Details	Default value
Login	Set the login name to externally connect to the Ethernet Unit via FTP.	None (CONFIDENTIAL is used.)
Password	Set the password to externally connect to the Ethernet Unit via FTP.	None
Port No.	This setting does not normally need to be changed. FTP uses two ports: a port for control and a port for data transfer. Set the control port only. The data transfer port uses the value set for the control port –1.	0 (21 is used.)

4-4 FTP Server Application Example

The following procedure shows how to use the FTP server by connection with the default login name, CONFIDENTIAL. No password is required.

Note The login name and a password must be set in the CPU Bus Setup for the Ethernet Unit in the CPU Unit to use any login name other than CONFIDENTIAL.

Note When general-purpose FTP software is used, files can be transferred and read using a graphical user interface similar to Explorer.

1,2,3...

1. Make sure that a Memory Card is inserted in the CPU Unit and turn ON the power supply to the PLC. If EM File Memory is to be used, create the EM File Memory.
2. Connect to the FTP server from a computer on the Ethernet by entering the text that is underlined in the following diagram.

IP address of the Ethernet Unit

```
$ ftp 150.31.2.83
connected to 150.31.2.83
220 **IPaddress** CS1W-ETN21 FTP server(FTP**version**)ready
Name:CONFIDENTIAL
230 Guest logged in.
```

Results

Login name

3. Enter FTP commands (underlined in the following diagram) to read and write files. The following directory tree is used in this example.

```
/:                  root
├── EM
└── MEMCARD
    └── ABC         (subdirectory)
        └── DEF.IOM (file)
```

```
ftp> ls
200 PORT command successful.
150 opening data connection for ls(**IPaddress**port#**)(0bytes).
MEMCARD
EM
226 Transfer complete.
** bytes received in 0 seconds(**bytes/s)
ftp> cd MEMCARD
250 CWD comand successful.
ftp> get ABC/DEF.IOM
200 PORT command successful.
150 opening data connection for abc/def.iom(**IPaddress**port#**)(**bytes).
226 Transfer complete
**bytes received in *.*** seconds(**bytes/s)
```

File names read

Results

Change to MEMCARD directory

Results

Transfer DEF.IOM from ABC directory

Results

4-5 Using FTP Commands

This section describes the FTP commands which the host computer (FTP client) can send to the Ethernet Unit's FTP server. The descriptions should also apply to most UNIX workstations, but slight differences may arise. Refer to your workstation's operation manuals for details.

4-5-1 Table of Commands

The FTP commands which can be sent to the Ethernet Unit are listed in the following table.

Command	Description
`open`	Connects the specified host FTP server.
`user`	Specifies user name for the remote FTP server.
`ls`	Displays the Memory Card file names.
`dir`	Display the Memory Card file names and details.
`rename`	Changes a file name.
`mkdir`	Creates a new directory in the working directory in the remote host.
`rmdir`	Deletes a new directory from the working directory in the remote host.
`cd`	Changes the Ethernet Unit work directory to the specified directory.
`cdup`	Changes the working directory at the remote host to the parent directory.
`pwd`	Displays the Ethernet Unit work directory.
`type`	Specifies the data type of transferred files.
`get`	Transfers the specified file from the Memory Card to the local host.
`mget`	Transfers multiple files from the Memory Card to the local host.
`put`	Transfers the specified local file to the Memory Card.
`mput`	Transfers multiple local files to the Memory Card.
`delete`	Deletes the specified file from the Memory Card.
`mdelete`	Deletes multiple files from the Memory Card.
`close`	Disconnects the FTP server.
`bye`	Closes the FTP (client).
`quit`	Closes the FTP (client).

- The Ethernet Unit is considered to be the remote host.
- A remote file is a file on the Memory Card or in EM File Memory in the CPU Unit.
- The host computer (FTP client) is considered to be the local host.
- A local file is one in the host computer (FTP client).
- The parent directory is the directory one above the working directory.

4-5-2 Using the Commands

open

Format

`open [`*`IP_address`* `or` *`host_name_of_FTP_server`*`]`

Function

Connects the FTP server. Normally when the FTP client is booted, the FTP server IP address is specified to execute this command automatically.

user

Format

`user [user_name]`

Function

Specifies the user name. Specify the FTP login name set in the Ethernet Unit system setup. The default FTP login name is “CONFIDENTIAL.”

If a non-default login name is used, it must be followed by the password. In this case, enter the FTP password set in the system setup.

The user name is automatically requested immediately after connection to the FTP server.

ls

Format

`ls [-l] [REMOTE_FILE_NAME [local_file_name]]`

Function

Displays the remote host (Memory Card or EM File Memory) file names.

Set the switch [-l] to display not only the file names but the creation date and size as well. If the switch is not set, only the file names will be displayed.

You can specify a file name in the Memory Card or EM File Memory if desired.

If a local file name is specified, the file information will be stored in the specified file in the host computer.

dir

Format

`dir [REMOTE_FILE_NAME [local_file_name]]`

Function

Displays the file names, date created, and size of the files in the remote host (Memory Card or EM File Memory). It displays the same information as command [ls -l].

Specify a file name in the Memory Card or EM File Memory as the remote file name.

If a local file name is specified, the file information is stored in the specified file in the host computer.

rename

Format

`rename CURRENT_FILE_NAME NEW_FILE_NAME`

Function

Changes the specified current file name to the specified new file name.

`rename` can be used only to change the file name. It cannot be used to move the file to a different directory.

mkdir

Format

`mkdir` *`DIRECTORY_NAME`*

Function

Creates a directory of the specified name at the remote host (Memory Card or EM File Memory).

An error will occur if a file or directory of the same name already exists in the working directory.

rmdir

Format

`rmdir` *`DIRECTORY_NAME`*

Function

Deletes the directory of the specified name from the remote host (Memory Card or EM File Memory).

The directory must be empty to delete it.

An error will occur if the specified directory does not exist or is empty.

pwd

Format

`pwd`

Function

Displays the remote host's (Ethernet Unit) current work directory.

cd

Format

`cd [`*`directory_name`*`]`

Function

Changes the remote host (Ethernet Unit) work directory to the specified remote directory.

The files in the Memory Card are contained in the MEMCARD directory under the root directory (/). The files in EM File Memory are contained in the EM directory under the root directory (/). The root directory (/) is the directory used when logging into the Ethernet Unit. No MEMCARD directory will exist if a Memory Card is not inserted in the PLC or if the Memory Card power indicator is not lit. No EM directory will exist if EM File Memory does not exist.

cdup

Format

`cdup`

Function

Changes the working directory at the remote host to the parent directory (one directory above the current working directory).

type

Format

`type` *`data_type`*

Function

Specifies the file data type. The following data types are supported:

ascii: Files are transferred as ASCII data
binary (image): Files are transferred as binary data.

All files are treated by the PLC as binary files. Before reading or writing any files, always use the `type` command to set the file type to binary. File contents cannot be guaranteed if transferred as ASCII data.

The default file type is ASCII.

get

Format

`get` *`FILE_NAME`* [*`receive_file_name`*]

Function

Transfers the specified remote file from the Memory Card or EM File Memory to the local host.

A receive file name can be used to specify the name of the file in the local host.

mget

Format

`mget` *`FILE_NAME`*

Function

Allows the use of a wildcard character (*) to transfer multiple remote files from the Memory Card or EM File Memory to the local host.

put

Format

`put` *`file_name`* [*`DESTINATION_FILE_NAME`*]

Function

Transfers the specified local file to the remote host (Memory Card or EM File Memory).

A destination file name can be used to specify the name the file is stored under in the Memory Card or EM File Memory.

Any existing file with the same name in the remote host (Memory Card or EM File Memory) will be overwritten by the contents of the transferred file.

If an error occurs during file transfer, the file being transferred will be deleted and the transmission will end in an error.

mput

Format

`mput` *`FILE_NAME`*

Function

Allows the use of a wildcard character (*) to transfer multiple local files to the remote host (Memory Card or EM File Memory).

Any existing file with the same name in the remote host (Memory Card or EM File Memory) will be overwritten by the contents of the transferred file.

If an error occurs during file transfer, the file being transferred will be deleted and the transmission of that file will end in an error. However, mput execution will continue and remaining files will be transferred.

delete

Format

`delete` *FILE_NAME*

Function

Deletes the specified remote file from the Memory Card or EM File Memory.

mdelete

Format

`mdelete` *FILE_NAME*

Function

Allows the use of a wildcard character (*) to delete multiple remote files from the Memory Card or EM File Memory.

close

Format

`close`

Function

Disconnects the Ethernet Unit's FTP server.

bye

Format

`bye`

Function

Ends the FTP (client).

quit

Format

`quit`

Function

Ends the FTP (client).

4-5-3 Error Messages and FTP Status

Error Messages

The error messages returned by the Ethernet Unit are listed in the following table.

Message	Meaning
PPP is a directory.	The path name indicated at PPP is a directory.
PPP is not a directory.	The path name indicated at PPP is not a directory.
Another unit has access authority (FINS error 0 x 3001).	Another Unit currently has the access right.
Bad sequence of commands.	The RNFR command has not been executed.
Can't create data socket (X.X.X.X, YY).	A socket cannot be created.
Cannot access to device (FINS error 0 x 250F).	A file device error has occurred.
Cannot get memory blocks.	A message memory block cannot be allocated.
Command format error (FINS error 0 x 1003).	The command format is incorrect.
Connect error.	A connection error has occurred.
Directories of old and new paths are not same.	The directories before and after changing the name are different.
Directory name length exceeded max. size.	The directory name is too long.
Directory not empty (FINS error 0 x 2108).	The directory must be empty to delete it.
Fatal error (FINS error 0 x 1101).	A parameter error has occurred.
Fatal error (FINS error 0 x 1103).	
File or directory already exists.	The specified file or directory name already exists.
File or directory already exists (FINS error 0 x 2107).	
File or directory name illegal.	The file or directory name is incorrect.
File or directory name illegal (FINS error 0 x 110C).	
File read error (FINS error 0 x 1104).	An error occurs when reading the file.
File read error (FINS error 0 x 110B).	
File write error (FINS error 0 x 2106).	An error occurs when reading the file.
File write error (FINS error 0 x 2107).	
FINS error MRES 0 x XX: SRES 0 x XX.	Some other FINS error has occurred.
Length of directory name too long.	The path name of the directory is too long.
No space to create entry (FINS error 0 x 2103).	There are too many files to create a new one.
No such device (FINS error 0 x 2301).	The file device cannot be found.
No such file or directory.	The specified file or directory does not exist.
No such file or directory (FINS error 0 x 2006).	
No such file or directory (FINS error 0 x 2106).	
Not enough memory.	The communications buffers are full.
Not enough space in the system. (FINS error 1104).	The file device is full.
PLC communication error (timeout).	File access timed out.
Socket canceled.	The socket was canceled.
Socket error NN.	A socket bind error occurred. The error code will be given at NN.
Socket receive error NN.	A data reception error occurred. The error code will be given at NN.
Socket send error NN.	A data send error occurred. The error code will be given at NN.
Timeout (900 seconds): closing control connection.	The connection was closed because the client did not respond for 15 minutes.
Too many open files.	Too many sockets have been created.
Write access denied.	Writing is not possible.
Write access denied. (FINS error 0 x 2101).	

PPP: Path name
XXX: IP address
YY: Port number
MM: FINS error code
NN: Socket error code

4-6 Checking FTP Status

4-6-1 FTP Status Flag

The current status of the FTP server can be obtained from the service status in the words allocated to the Ethernet Unit in the CPU Bus Unit Area in the CIO Area. The word containing the FTP Status Flag can be computed as follows: CIO 1500 + (25 x unit number) + 17

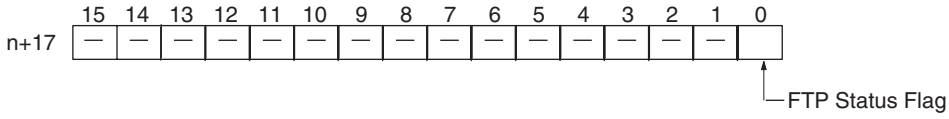

Status of bit 00	Meaning
1	FTP server busy (a user is connected)
0	FTP server free

Note

1. File operations for files on the Memory Card are performed during FTP communications. Do not remove the Memory Card or turn OFF power to the PLC while FTP is being used.
2. When using File Memory Instruction from the program in the CPU Unit, program exclusive control using the FTP Status Flag so that the same data is not manipulated simultaneously by more than one instruction.
3. The FTP status can also be checked using the software switch settings on the CX-Programmer.

■ FTP Indicator

The FTP indicator on the Ethernet Unit indicates FTP status as shown in the following table.

FTP indicator	Meaning
Lit	FTP server busy (a user is connected)
Not lit	FTP server free

4-7 Using File Memory

There are two media that can be used to store files in memory for CS/CJ-series PLCs:

- Memory Cards
- EM File Memory

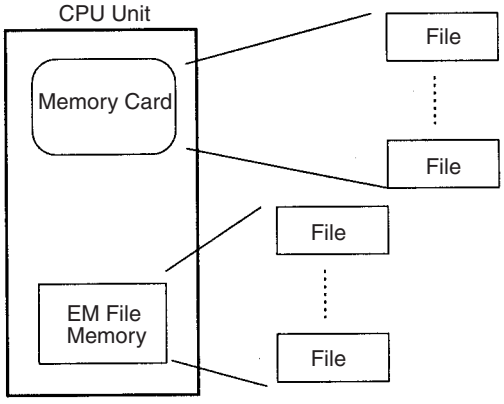

4-7-1 File Memory

Media	Memory type	Capacity	Model	File data recognized by CPU Unit
CS/CJ-series Memory Cards	Flash memory	8 MB	HMC-EF861	• Complete user program • Specified portions of I/O Memory • Parameter area data (e.g. PLC Setup)
		15 MB	HMC-EF171	
		30 MB	HMC-EF371	
EM File Memory	RAM	Max. capacity of EM Area in CPU Unit	All EM Area banks from specified bank in I/O Memory (specified in PLC Setup)	

4-7-2 File Types

■ **File Names**

Files are distinguished by assigning file names and extensions. The following characters can be used in file names and extensions:

Alphanumeric characters: A to Z and 0 to 9. (Names converted to all-caps)
! & $ # ’ [ ] - ^ ( ) _

The following characters cannot be used in files names and extensions:

, . / ? * ” : ; < > = + *(spaces)*

File names are not case sensitive and will be converted to all-caps in the PLC file system. File names can be up to 8 character long with 3-character extensions. An error will occur if a file name or extension is too long. The first period (.) in a file name will be taken as the delimiter between the file name and extension. Extensions are determined by the file type.

■ **Directories**

Up to five levels of directories (including root as the first level) can be created as file storage locations. A maximum of 65 characters can be used in directory names.

File Names Handled by CPU Unit

The files described in the following table can be read or written by the CPU Unit.

File type		File name	Extension	Contents	Description
Data file		********	.IOM	Specified ranges of I/O Memory	• Contains word (16-bit) data from a starting word through an end word in one memory area. • The following areas can be used: CIO, HR, WR, AR, DM, and EM.
Program file		********	.OBJ	Complete user program	• Contains all the programs for cyclic tasks and interrupt tasks, as well as task information for one CPU Unit.
Parameter area file		********	.STD	• PLC Setup • Registered I/O tables • Routing tables • CPU Bus Unit Setup and other setup data	• Contains all of the parameter data for one CPU Unit. • There is no need for the user to distinguish the various types of data contained in the file. • The file can be automatically read to or written from the CPU Unit simply by specifying the extension (.STD)
Files transferred at startup	Data files	AUTOEXEC	.IOM	I/O Memory data for the specified number of words starting from D20000	• There does not necessarily need to be a data file in the Memory Card when the automatic file transfer function is used at startup. • The AUTOEXEC.IOM file always contains DM Area data starting at D20000. • All data in the file will be transferred to memory starting at D20000 at startup.
	Program files	AUTOEXEC	.OBJ	Complete user program	• There must be a program file in the Memory Card when the automatic file transfer function is used at startup. • Contains all the programs for cyclic tasks and interrupt tasks, as well as task information for one CPU Unit.
	Parameter area file	AUTOEXEC	.STD	• PLC Setup • Registered I/O tables • Routing tables • CPU Bus Unit Setup and other setup data	• There must be a parameter file in the Memory Card when the automatic file transfer function is used at startup. • Contains all of the parameter data for one CPU Unit. • There is no need for the user to distinguish the various types of data contained in the file. • All parameters in the file will be automatically transferred to specified locations in memory at startup.

Note
1. Refer to information on file memory in the *CS/CJ-series Programmable Controllers Operation Manual* (W339).
2. All files transferred automatically at startup must have the name AUTOEXEC.

4-7-3 Initializing File Memory

Memory	Initialization method
Memory Cards	1. Insert the Memory Card into the CPU Unit. 2. Initialize the Memory Card from a Programming Device (Programming Consoles included).
EM File Memory	1. Specify in the PLC Setup the first bank to convert to file memory. 2. Initialize EM File Memory from the CX-Programmer.

4-7-4 I/O Memory Data Format

■ IOM Format

The IOM format is a data format used for binary data specified by the ladder instructions, READ DATA FILE (FREAD(700)) and WRITE DATA FILE (FWRIT(701)), in the CPU Unit.

If five words of data from the I/O memory (1234 hexadecimal, 5678 hexadecimal, 9ABC hexadecimal, etc.) is contained in an attached file in IOM format, the data will be stored in the attached file as shown in the following diagram.

Example: Binary data format with a delimiter after every 10 fields.

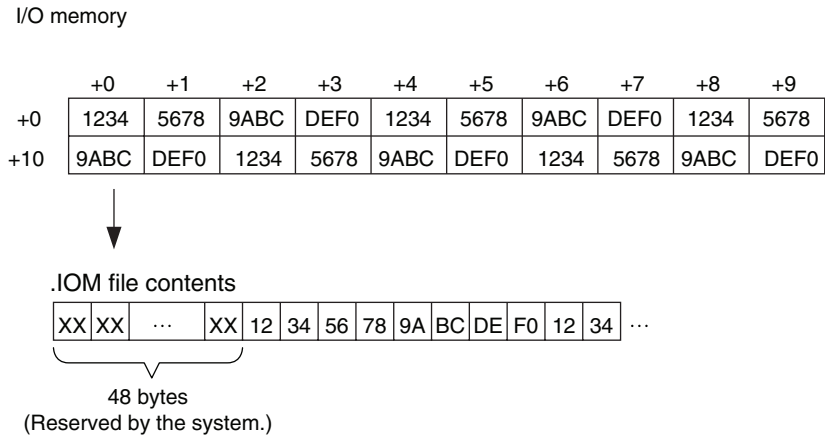

■ TXT Format

The TXT format is a data format (using tab delimiters) specified by the ladder instructions, READ DATA FILE (FREAD(700)) and WRITE DATA FILE (FWRIT(701)), in the CPU Unit. The format is configured according to the specified FREAD(700) and FWRIT(701) parameters, as follows:

Data format	Use of CRs and CR position
• Words without delimiters • Double words without delimiters • Words delimited by tabs. • Double words delimited by tabs	• No CRs • CR after every 10 fields. • CR after each field. • CR after every 2 fields. • CR after every 4 fields. • CR after every 5 fields. • CR after every 16 fields.

If data from the I/O memory (1234 hexadecimal, 5678 hexadecimal, 9ABC hexadecimal, etc.) is contained in an attached file in TXT format, the data will be converted into ASCII format in words or double-words. The words are delimited by inserting tabs ([HT]: 09), and carriage returns (CR) after specified fields ([CR][LF]: 0D0A).

Example: Data format using words delimited by tabs and CRs after every 10 fields.

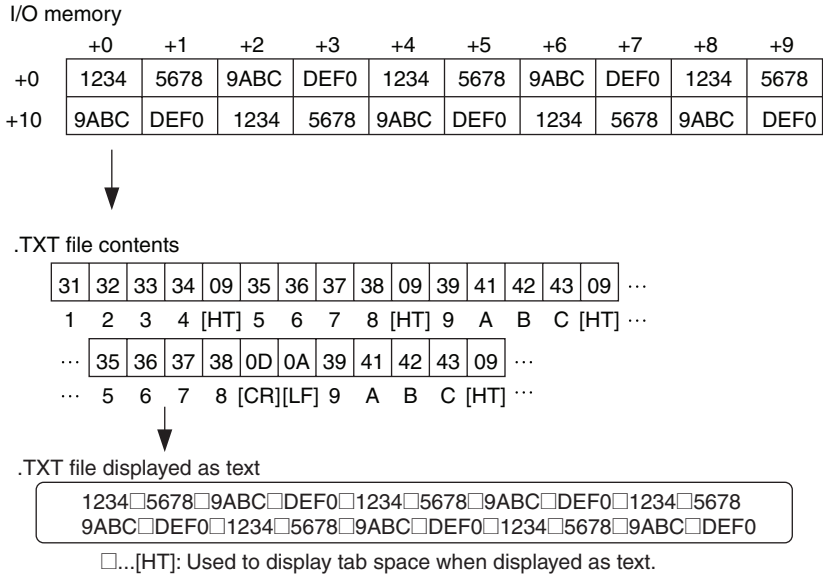

■ CSV Format

The CSV format is a data format (using comma delimiters) that is specified by ladder instructions, READ DATA FILE (FREAD(700)) and WRITE DATA FILE (FWRIT(701)), in the CPU Unit. The CSV format is configured according to the specified FREAD(700) and FWRIT(701) parameters, as follows:

Data format	Use of CRs and CR position
Words delimited by commas. Double words delimited by commas.	• No CRs • CR after every 10 fields. • CR after each field. • CR after every 2 fields. • CR after every 4 fields. • CR after every 5 fields. • CR after every 16 fields.

If word data from the I/O memory (1234 hexadecimal, 5678 hexadecimal, up to DEF0 hexadecimal) is contained in an attached file in CSV format, the word data will be converted into ASCII format in word or double-word units. The words are delimited by inserting comma delimiters (',':2C), and CRs after specified fields ([CR][LF]: 0D0A).

Example: Data format using words delimited by commas with CRs after every 10 fields.

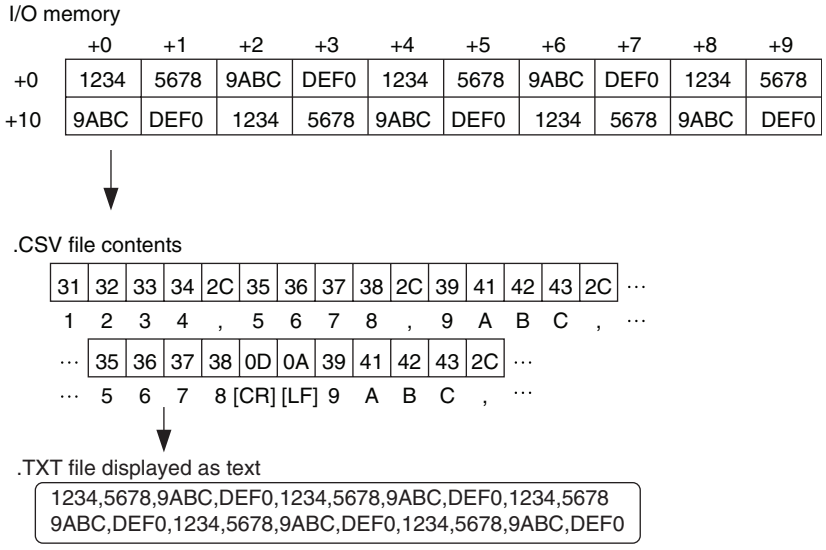

Note FREAD(700) will not be able to read the last byte in a file that has been written to the Memory Card if the file contains an odd number of bytes. Add 00 hexadecimal to the end of the file if necessary to write an even number of bytes to the Memory Card.

Note The UM and DM Areas contain binary data. Set the data type to binary using the `type` command before reading or writing files using FTP.

Note For details on how to use File Memory Instructions, refer to the *CS/CJ Series Instructions Reference Manual* (W340).

4-8 FTP File Transfer Time

File transfers using FTP can require 30 or 40 minutes depending on the capacity of the file. Approximate file transfer time are provided in the following table for reference.

All times are in seconds unless otherwise specified.

■ **CS1 CPU Units/CJ1 CPU Units**

File system		Memory Card		EM File Memory	
CPU Unit status	Operating mode	PROGRAM	RUN	PROGRAM	RUN
	Cycle time	---	20 ms	---	20 ms
Transfers using `put`	1 KB	0.7 s	6.0 s	0.4 s	2.9 s
	30 KB	4.5 s	38.3 s	2.5 s	21.5 s
	60 KB	7.4 s	72.1 s	5.0 s	44.7 s
	120 KB	14.4 s	141.4 s	11.0 s	120.8 s
Transfers using `get`	1 KB	0.3 s	1.4 s	0.2 s	0.8 s
	30 KB	2.8 s	19.3 s	1.9 s	11.4 s
	60 KB	4.9 s	37.6 s	3.8 s	26.7 s
	120 KB	9.6 s	75.7 s	8.6 s	68.2 s

■ **CS1-H CPU Units/CJ1-H CPU Units**

File system		Memory Card		EM File Memory	
CPU Unit status	Operating mode	PROGRAM	RUN	PROGRAM	RUN
	Cycle time	---	20 ms	---	20 ms
Transfers using `put`	1 KB	0.3 s	1.9 s	0.2 s	1.0 s
	30 KB	1.5 s	11.5 s	0.8 s	6.5 s
	60 KB	2.6 s	21.4 s	1.5 s	12.8 s
	120 KB	4.9 s	41.2 s	3.2 s	27.4 s
Transfers using `get`	1 KB	0.2 s	0.6 s	0.2 s	0.4 s
	30 KB	1.3 s	6.5 s	1.1 s	3.8 s
	60 KB	2.5 s	12.6 s	1.9 s	7.6 s
	120 KB	4.9 s	24.9 s	4.2 s	20.4 s

Note

1. The above times assume that the Fixed Peripheral Servicing Time in the PLC Setup is set to the default value of 4%.
2. If the Fixed Peripheral Servicing Time in the PLC Setup is increased, FTP files will be transferred faster.

4-9 UNIX Application Example

The following procedure provides an example of FTP operations from a UNIX workstation. In this example, the following assumptions are made.

- The IP address of the Ethernet Unit is registered in /etc/hosts on the workstation as [cs1].
- The default FTP login name is being used (CONFIDENTIAL).
- A processing results data file called RESULT.IOM already exists on the Memory Card in the CPU Unit.
- A processing instructions data file called PLAN.IOM already exists on the workstation.

The following procedure transfers the processing results file RESULT.IOM from the Memory Card in the CPU Unit to the workstation and then the processing instructions file PLAN.IOM is transferred from the workstation to the Memory Card in the CPU Unit.

Underlined text is keyed in from the FTP client. The workstation prompt is indicated as $ and the cursor is indicated as ■.

1,2,3... 1. Start FTP and connect to the Ethernet Unit.

```
$ ftp cs1  ··· FTP started.
connected to cs1
220 **IPaddress** CS1W-ETN21 FTP server(FTP**version**)ready
Name(cs1:root):■
```

2. Enter the login name.

```
Name(cs1:root):CONFIDENTIAL  ··· Login name
230 Guest logged in.
ftp> ■
```

3. Make sure the Memory Card is inserted. The MEMCARD directory will be displayed if there is a Memory Card in the CPU Unit.

```
ftp> ls  ··· Used to check for Memory Card.
200 PORT command successful.
150 opening data connection for ls(**IPaddress**port#**)(0 bytes).
MEMCARD
226 Transfer complete.
15 bytes received in 0 seconds(**bytes/s)
ftp> ■
```

4. Change to the MEMCARD directory.

```
ftp> cd MEMCARD  … Change to MEMCARD directory.
250 CWD command successful.
ftp> ■
```

5. Change data type to binary.

```
ftp> type binary  … Binary data type set.
200 Type set to I.
ftp>■
```

6. Transfer the file RESULT.IOM to the workstation.

```
ftp> get RESULT.IOM  … File read.
200 PORT command successful.
150 opening data connection for result.iom (**IPaddress**port#**) (**bytes).
226 Transfer complete.
** bytes received in *.*** seconds (**bytes/s)
ftp> ■
```

7. Write the file PLAN.IOM to the Memory Card.

```
ftp> put PLAN.IOM  … File written
200 PORT command successful.
150 opening data connection for plan.iom (**IPaddress**port#**) .
226 Transfer complete.
** bytes received in *.** seconds (**bytes/s)
ftp> ■
```

8. End FTP.

```
ftp> bye  … FTP ended.
221 Goodbye.
$ ■
```

SECTION 5
Automatic Clock Adjustment Function

This section provides an overview of the automatic clock adjustment function, including details on specifications, required settings, operations from CX-Programmer, and troubleshooting.

5-1 Overview 90
5-1-1 Overview 90
5-1-2 Specifications 91
5-2 Using the Automatic Clock Adjustment Function 91
5-2-1 Procedure 91
5-2-2 Settings Required for Automatic Clock Adjustment Function. 92
5-2-3 Auto Adjust Time 93
5-3 Automatic Clock Adjustment Switch 94
5-4 Automatic Clock Adjustment Error Processing 94
5-4-1 Automatic Clock Adjustment (SNTP) Errors. 94
5-4-2 Troubleshooting Automatic Clock Adjustment Errors with Indicators 94
5-4-3 Error Log Error Codes for the Automatic Clock Adjustment Function 95

5-1 Overview

5-1-1 Overview

The Ethernet Unit can obtain the clock information from the SNTP server (see note 1) at a particular time or when a designated bit turns ON and then refresh the internal clock information of the CPU Unit to which it is mounted (referred to as the local CPU Unit)

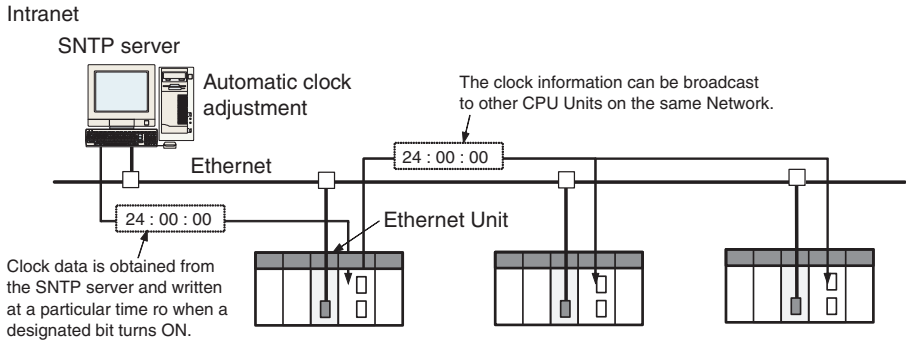

Note

(1) The SNTP (Simple Network Time Protocol) server is used to control the time on the LAN.

(2) An error will occur in the following CPU Units when the automatic clock adjustment function is executed under the conditions shown in the table.

CPU Unit	Conditions
CPU Units manufactured on or before January 31, 2003 (lot numbers 030131 or earlier): CJ1G-CPU□□H CJ1H-CPU□□H CS1G-CPU□□H CS1H-CPU□□H	When the CPU execution mode is set to other than normal mode (priority peripheral servicing mode, parallel processing with synchronous memory access mode, or parallel processing with asynchronous memory access mode). AND When the CPU Unit operating mode is set to RUN or MONITOR mode.

(3) The manufacturing date can be determined from the lot number on the side or top corner of the CPU Unit.

(4) The lot numbers are as follows:
YYMMDDnnnn, in which YY indicates the last two digits of the year, MM the month, DD the day, and nnnn the serial number.

(5) In accordance with SNTP protocol specifications, automatic adjustment will not be possible from February 7, 2036. In Ethernet Units, this function will no longer operate from February 7, 2036 (this status will not be displayed as error information).

5-1-2 Specifications

Item	Specification	
Protocol	SNTP	
Port number	123 (UDP) Can also be set from the CX-Programmer in the Unit Setup.	
Adjustment timing	Automatic (fixed time) and manual (manual only cannot be set)	
Access to SNTP server	Writes the clock information from the SNTP server to the local CPU Unit.	Obtains the clock information from the SNTP server set up on the Network, and applies the information obtained to the local CPU Unit.
Refresh timing	When the automatic clock adjustment switch is turned from OFF to ON and at a specified time.	

5-2 Using the Automatic Clock Adjustment Function

5-2-1 Procedure

1. Make the basic settings.
   Refer to *SECTION 2 Installation and Initial Setup* in the *Ethernet Units Operation Manual Construction of Networks* (W420).

↓

2. With the CX-Programmer online, set the following items in the Unit Setup (CPU Unit System Setup).
   - SNTP server specification (required)
   - Access to the SNTP server is enabled when writing clock information from the SNTP server to the local CPU Unit when the Automatic Clock Adjustment Switch is turned from OFF to ON and at a set automatic adjustment time.
   - Automatic clock adjustment setting

↓

3. To perform automatic clock adjustment manually, turn the Automatic Clock Adjustment Switch from OFF to ON.
   n = CIO 1500 + (25 × unit number)

↓

4. Select ***Transfer to PLC*** from the Options Menu and click the **Yes** Button. The Unit Setup (CPU Bus System Setup) will be transferred to the CPU Unit (the setting data will be transferred to the CPU Bus Unit System Setup Area).

5-2-2 Settings Required for Automatic Clock Adjustment Function

The following settings must be set in the Unit Setup when using the automatic clock adjustment function.

CX-Programmer tab	Settings	Setting conditions	Reference
Auto Adjust Time	Server specification type	Required.	*5-2-3 Auto Adjust Time* on *page 93*
	IP Address	One or the other is required, depending on the *Server specification type* setting.	
	Host name		
	Port No.	Rarely required. (Change when a setting other than the default setting of 123 is required.)	
	Get the time information from the SNTP server	Required.	
	Auto Adjust Time	Optional	
	Retry timer	Optional (Change when the default setting of 10 seconds is unacceptable.)	
	Adjust Time	Optional	
DNS (See note.)	IP Address	Required.	*1-4 Common Protocol Settings* on *page 4*
	Port No.	Rarely required. (Change when a setting other than the default setting of 53 is required.)	
	Retry timer	Optional (Change when the default setting of 10 seconds is unacceptable.)	

Note When the *Server specification type* field in Auto Adjust Time Tab is set to *Host name*.

5-2-3 Auto Adjust Time

The contents in the CPU Bus Unit System Setup that are set for using mail send and receive functions are shown in the CX-Programmer's Unit Setup.

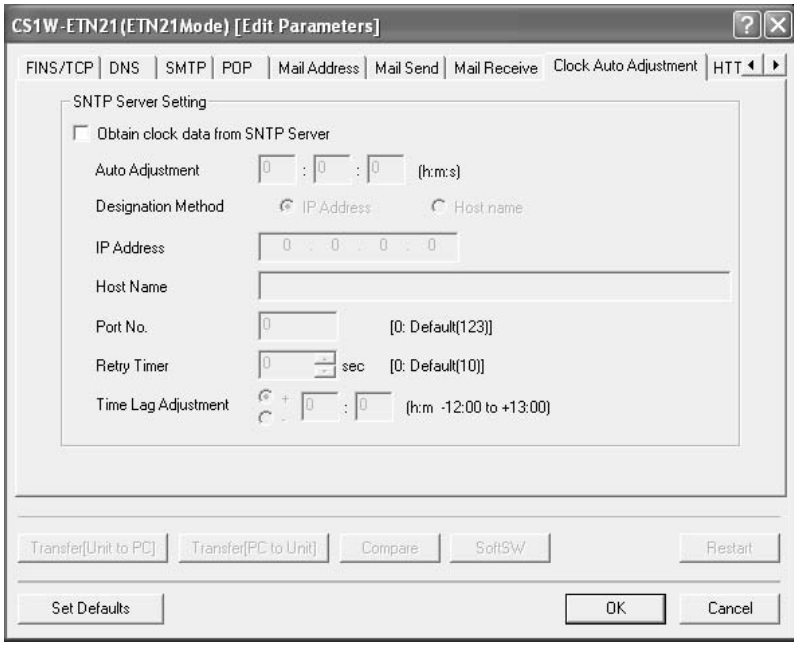

Item	Contents	Default
Get the time information from the SNTP server	Enable to set the CPU Unit's clock to the time at the SNTP server's clock. The clock can be changed only for the CPU Unit to which the Ethernet Unit is mounted.	Not selected (disabled)
Auto Adjust Time	Set the time at which the SNTP server is to be accessed to synchronize the clocks. When the time that is set here arrives, the SNTP server is accessed and the CPU Unit clock is adjusted to match the SNTP server clock.	0:0:0
Server specification type	Select whether the SNTP server used for automatic clock adjustment is to be specified by IP address or by host domain name (i.e., by host name).	IP Address
IP Address	Set the IP address for the SNTP server that is to be used for automatic clock adjustment. This setting is enabled only when server specification by IP address has been selected.	0.0.0.0
Host name	Set the host domain name (i.e., the host name) for the SNTP server that is to be used for automatic clock adjustment. This setting is enabled only when server specification by host name has been selected.	None
Port No.	Set the port number for connecting to the SNTP server that is to be used for automatic clock adjustment. This setting does not normally need to be changed.	0 (Number 123 is used.)
Retry timer	Set the time to elapse before retrying when a connection to the SNTP server fails. This setting does not normally need to be changed.	0 (10 s)
Adjust Time	This sets in the CPU Unit's clock data the time difference made up from the SNTP server's clock data. To use the clock data from the SNTP server just as it is, input 0.	+0:0

5-3 Automatic Clock Adjustment Switch

The Automatic Clock Adjustment Switch is allocated in the CIO Area as shown below. The first word n of the CIO Area is calculated using the following equation.

n = CIO 1500 + (25 × unit number)

Automatic Clock Adjustment Switch (Bit 04 of n)

The Unit control bit is shown in the following diagram.

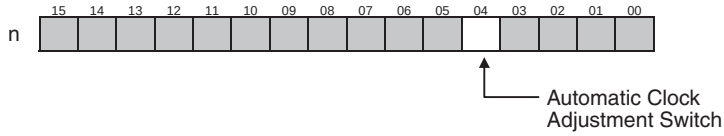

When the Automatic Clock Adjustment Switch turns from OFF to ON, the Ethernet Unit obtains the clock data from the SNTP server on the network, and applies it to the local CPU Unit. After applying the data, the switch automatically turns OFF again.

5-4 Automatic Clock Adjustment Error Processing

5-4-1 Automatic Clock Adjustment (SNTP) Errors

The following table shows the main causes and remedies for errors that occur in the automatic clock adjustment function (SNTP).

Cause	Correction
SNTP, DNS server address not set	Reset each server address (IP address or host name).
SNTP, DNS server communications timeout	Inspect the communications path (Ethernet Unit, cable connections, hub, router, server), and correct the situation that is causing the error.
CPU Unit internal clock could not be set	The automatic clock adjustment function is not supported by certain CPU Units (models, lot numbers) if they are in RUN or MONITOR mode.

5-4-2 Troubleshooting Automatic Clock Adjustment Errors with Indicators

RUN	ERC	ERH	LNK	HOST	Probable cause	Correction
ON	---	ON	---	Flashing	The server (DNS, SNTP) settings in the Unit Setup are incorrect.	Read the error status and error log, and reset the data in which the error occurred. If the error occurs again, replace the CPU Unit.
		OFF	---	Flashing	A Network failure has occurred in the communications path, causing an access timeout.	Inspect the communications path (Ethernet Unit, cable connections, hub, router, server), and correct the situation that is causing the error.

Note For details on other error log information, refer to the *Operation Manual, Construction of Networks: SECTION 8 Troubleshooting*.

5-4-3 Error Log Error Codes for the Automatic Clock Adjustment Function

When an error occurs while the Ethernet Unit is operating, the error code, detailed error code, and time the error occurred are saved in the error log. The following table provides a list of the error codes.

The error log can be read by sending FINS commands to the Ethernet Unit or by using the mail receive function and specifying the ErrorLogRead command.

Error code	Meaning	Detailed error code		Correction	EEPROM
		1st byte	2nd byte		
021A	Logic error in setting table	00	01: Data link table 02: Network parameters 03: Routing tables 04: Setup 05: CPU Bus Unit Words (CIO/DM)	Recreate the data specified by the 2nd byte of the detailed error code.	Saved
03C1	Server setting error	00: DNS 01: SMTP 02: POP3 03: SNTP	01: IP address 02: Host name 03: Port number 04: Other parameters	Set the server settings correctly based on the information in the detailed error code.	---
03C4	Server connection error	00: DNS 01: SMTP 02: POP3 03: SNTP	01: Specified host does not exist 02: No service at specified host 03: Timeout 04: Closed unilaterally by host 05: Cannot connect because account information does not match 06: Host name resolution error 07: Transmission error 08: Reception error 09: Other error	Take either of the following measures. • Correct the settings for each server. • Inspect the communications path (Ethernet Unit, cable connections, hub, router, server), and correct the situation that is causing the error.	---

Error code	Meaning	Detailed error code		Correction	EEPROM
		1st byte	2nd byte		
03C6	Clock data write error	0001: Clock data could not be refreshed because of a CPU Unit error.		Clear the CPU Unit error.	---
		0002: Clock data could not be refreshed because the CPU Unit could not write clock data in that operation mode.		The automatic clock adjustment function is not supported by certain CPU Units (models, lot numbers) if they are in RUN or MONITOR mode. (See note.)	---

Note

(1) For details on other error log information, refer to the *Operation Manual, Construction of Networks: SECTION 8 Troubleshooting*.

(2) An error will occur in the following CPU Units when the automatic clock adjustment function is executed under the conditions shown in the table.

CPU Unit	Conditions
CPU Units manufactured on or before January 31, 2003 (lot numbers 030131 or earlier): CJ1G-CPU□□H CJ1H-CPU□□H CS1G-CPU□□H CS1H-CPU□□H	When the CPU execution mode is set to other than normal mode (priority peripheral servicing mode, parallel processing with synchronous memory access mode, or parallel processing with asynchronous memory access mode). AND When the CPU Unit operating mode is set to RUN or MONITOR mode.

(3) The manufacturing date can be determined from the lot number on the side or top corner of the CPU Unit.

(4) The lot numbers are as follows:
YYMMDDnnnn, in which YY indicates the last two digits of the year, MM the month, DD the day, and nnnn the serial number.

SECTION 6
Socket Services

This section describes the functionality provided by the Ethernet Unit via the socket services.

6-1 Overview of Socket Communications from Ethernet Units 99
6-1-1 What are Sockets?. 99
6-1-2 Socket Port Numbers 99
6-2 Protocol Overview. 100
6-2-1 Differences between TCP and UDP 100
6-2-2 Opening TCP Sockets. 100
6-2-3 Fragmentation of Send Data 102
6-3 Overview 103
6-3-1 Socket Service Functions 103
6-3-2 Using Socket Services with Socket Service Request Switches 104
6-3-3 Using Socket Services with CMND(490). 105
6-3-4 Specific Socket Service Functions 105
6-3-5 Differences with Previous Models 106
6-4 Socket Service Function Guide. 106
6-4-1 Manipulating Dedicated Control Bits. 106
6-4-2 Executing CMND(490) 106
6-5 Using Socket Service Functions 107
6-5-1 Procedure 107
6-5-2 Settings Required for Socket Service Function 107
6-5-3 Setup Tab 108
6-6 Socket Service Status 110
6-6-1 CIO Area Allocations 110
6-6-2 DM Area Allocations 111
6-7 Using Socket Services by Manipulating Dedicated Control Bits 113
6-7-1 Application Procedure 113
6-7-2 Socket Services and Socket Status 114
6-7-3 Socket Service Parameters 115
6-7-4 Parameters. 117
6-7-5 Socket Service Request Switches 119
6-7-6 Response Codes 120
6-7-7 Timing Charts 125
6-7-8 TCP/IP Communications Programming Example 127
6-7-9 UDP/IP Communications Programming Example 131

6-8 Using Socket Services with CMND(490) 135
6-8-1 Using Socket Service 135
6-8-2 Socket Services and Socket Status 136
6-8-3 Basic FINS Command Format 137
6-8-4 Response Codes in the Command Response. 138
6-8-5 Response Codes in the Results Storage Areas 138
6-8-6 Communications Timing Chart 138
6-8-7 Socket Service Timing Chart 138
6-8-8 TCP/IP Communications Programming Example 140
6-8-9 UDP/IP Communications Programming Example 148
6-9 Precautions in Using Socket Services 154
6-9-1 UDP and TCP Socket Services 154
6-9-2 UDP Socket Service 154
6-9-3 TCP Socket Service. 154
6-9-4 Precautions in Using Socket Service Request Switches 155
6-9-5 Times Required for Sending and Receiving for Socket Services . . . 156

6-1 Overview of Socket Communications from Ethernet Units

6-1-1 What are Sockets?

Sockets are interfaces that allow TCP and UDP protocols to be used directly from the user program. With personal computers, socket are provided as C language interface libraries, which allow TCP or UDP protocols to be programming using library functions. With UNIX computers, socket interfaces are supported in the form of system calls.

The CS/CJ-series PLCs support the socket service from the user program. The user program requests service functions either by manipulating Socket Service Request Switches in the CPU Bus Unit Area in the CIO Area or by sending FINS commands to the Ethernet Unit by executing CMND(490) instruction in the ladder diagram.

Socket communications services can be used to transfer arbitrary data between a PLC and a host computer or between two PLCs. The Ethernet supports two socket services: a UDP socket service and a TCP socket service.

■ **Using Sockets with the Ethernet Unit**

The Ethernet Unit supports up to 16 simultaneous socket connections for the socket services, 8 each for UDP and TCP sockets.

Socket numbers 1 to 8 are assigned to sockets for both UDP and TCP sockets. Sockets are managed from the ladder-diagram program by assigning a socket port for each socket number. The socket port number is assigned when the socket is opened.

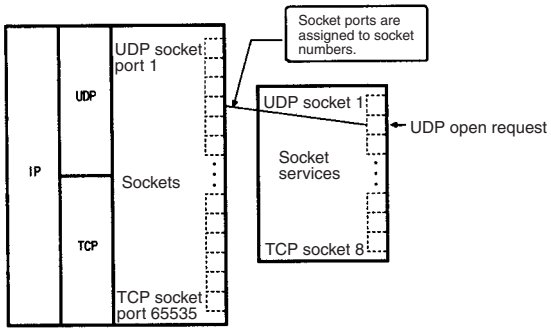

6-1-2 Socket Port Numbers

Port numbers up to 1023 on a UNIX workstation can be used by the superuser only. Port numbers 0 to 255 are reserved for well-known ports. Consequently, port numbers 1024 and above should be used for socket services. The Ethernet Unit does not support port #0.

Some port numbers over 1024 may be reserved on some workstations (for example, the X-window server is port #6000). Do not use port numbers that are already reserved for other processes.

The setting status of the UNIX workstation port numbers can be checked in /etc/services.

6-2 Protocol Overview

6-2-1 Differences between TCP and UDP

There are differences in the socket services between TCP and UDP.

■ **TCP Communications**

The following procedure is followed each time data is transmitted to ensure that the data arrives normally at the remote node:

1,2,3...

1. The remote node returns ACK when data is received normally.
2. The local node sends the next data after it receives ACK, or it resends the same data if ACK is not returned within the specified time.

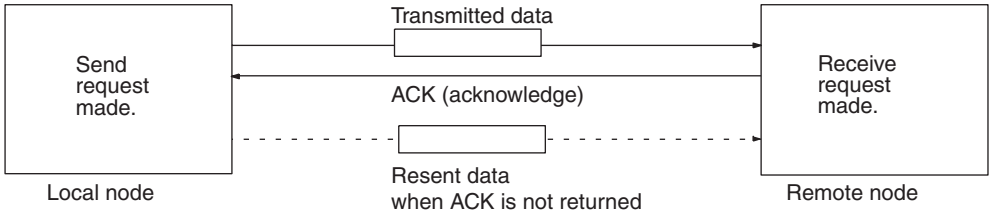

With the TCP protocol, the remote IP address and remote TCP port number are specified when an open request is made for a socket. When a send request is made, the number of bytes to send and the send data are specified. When a receive request is made, the number of bytes to receive is specified.

With the TCP protocol, communications with another remote device are not possible until the socket that was opened has been closed.

■ **UDP Communications**

Data is simply sent to the remote node. Unlike TCP, the reception of data is not checked and data is not resent. To increase communication reliability, data resends must be programmed by the user in user application.

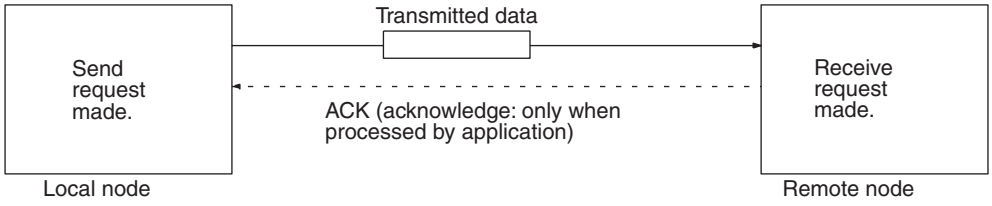

With the UDP protocol, the remote IP address and remote UDP port number are not specified when an open request is made for a socket. When a send request is made, the remote IP address, the remote UDP port number, the number of bytes to send, and the send data are specified. When a receive request is made, the number of bytes to receive is specified. (The response data shows from which IP address and UDP port number the received data was sent.)

With the UDP protocol, communications with another remote device are possible even if the socket that was opened is not closed.

6-2-2 Opening TCP Sockets

To achieve highly reliable data communications, TCP establishes a virtual communications circuit between the two nodes before starting data transmissions. The virtual communications circuit is known as a “connection.”

■ **Passive OPEN and Active OPEN**

An open command is executed for a node to establish a connection. The open method differs depending on whether the node is a client or server. A passive open method is used to open the node as a server and the active open method is used to open the node as a client.

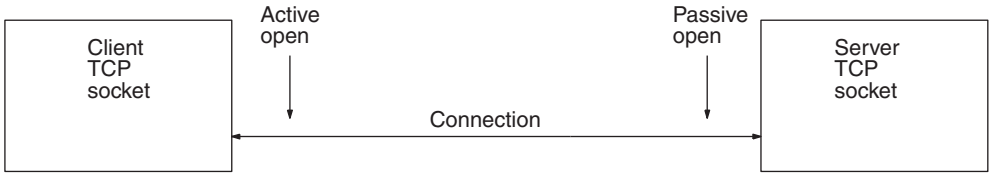

Note

1. TCP sockets must be closed once a connection has been made before communications are possible with other TCP sockets. This is true for other server and client sockets. Up to eight TCP sockets can be open simultaneously.
2. With UDP sockets, communications are possible with more than one other UDP socket.
3. When a connection is made between two nodes, the process at the node providing a service is called the server, and the process at the node requesting the service is called the client. The server is started first and waits for a service request from a client. The client requests to the server that a connection be opened and then transmits data. When the TCP protocol is used, however, the client–server relationship does not need to be programmed in the application because it is automatically handled by the protocol.

TCP Communications Procedure

The communications procedure is shown below for communications between a host computer and Ethernet Unit using a TCP socket. In this example, the host computer is the server and the Ethernet Unit is the client.

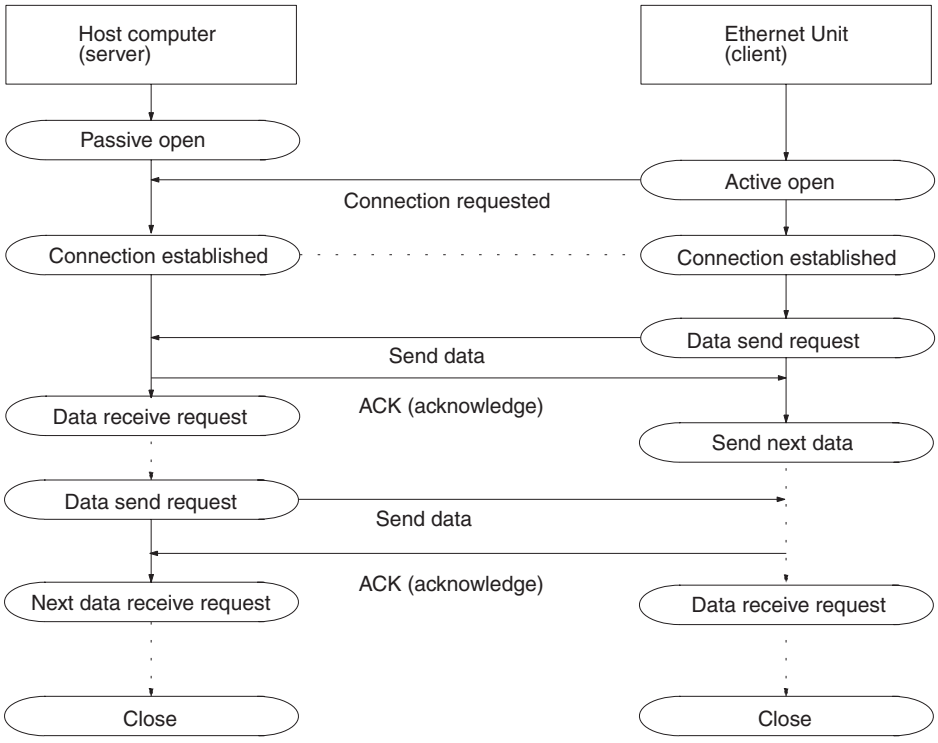

6-2-3 Fragmentation of Send Data

The Ethernet Unit fragments data for TCP transmission into units of 1,024 bytes and data for UDP transmission into units of 1,472 bytes. TCP requires one reception request to receive each unit of data. UDP, however, restores the original data before passing it to the user process, allowing all the data in a single transmission to be received with one reception request.

■ Cautions when Using TCP

An example of the fragmentation and transmission of data using the TCP is shown in the following illustration.

1,2,3...

1. The sending user program sends a request to send 1,984 bytes of data.
2. The Ethernet Unit fragments the send data into Data A with 1,024 bytes and Data B with 960 bytes.
3. Data A and Data B are sent consecutively.
4. The receiving user program sends a request to receive 1,984 bytes of data. However, only data A is sent in the first packet, and data B is not received.
5. Another receive request to receive data must be made before the remaining data, Data B, is received.

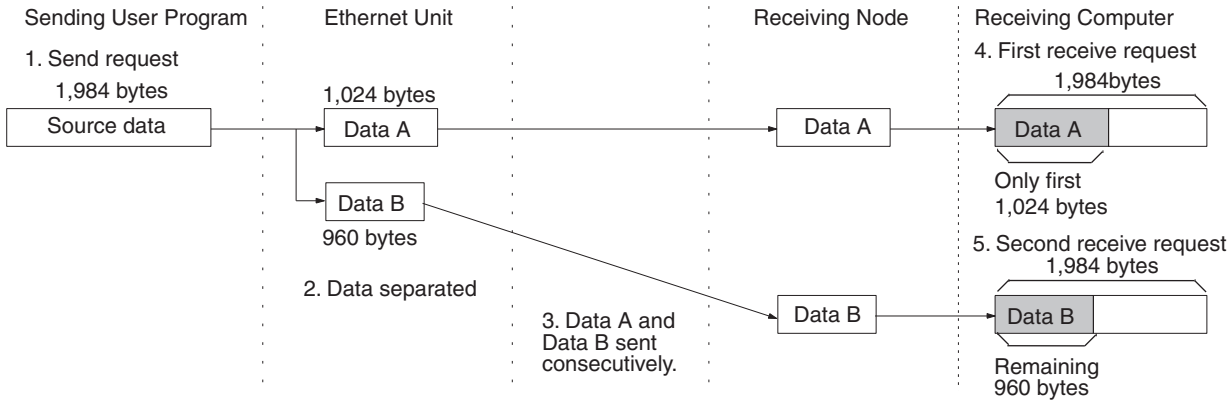

When using TCP protocol, the fragmented data is passed to the user program. Therefore, the receiving user program must be able to evaluate the end of the data transmission, and repeatedly send receive requests until all data has been received. The receive request is sent twice in the example shown above, but the data would be even more fragmented if a router was included in the communications path, and the number of receive requests would need to be increased accordingly.

When making the receive request, it is not necessary to specify the same data length as the sent data length. For example, if the length setting is shorter than the actual length of the data, all the data can be received by repeating the receive requests.

Note If communications are with a different segment and data is sent via the TCP protocol, data will be fragmented into units of 536 bytes.

■ Cautions when Using UDP

An example of fragmentation and transmission of data using the UDP is shown in the following illustration.

1,2,3...

1. The transmission user program sends a request to send 1,984 bytes of data.
2. The Ethernet Unit fragments the send data into Data A with 1,472 bytes and Data B with 512 bytes.

3. Data A and Data B are sent consecutively.
4. When the receiving user program sends a request to receive 1,984 bytes of data, Data A and Data B are linked to restore the original data, which is passed to the user program.

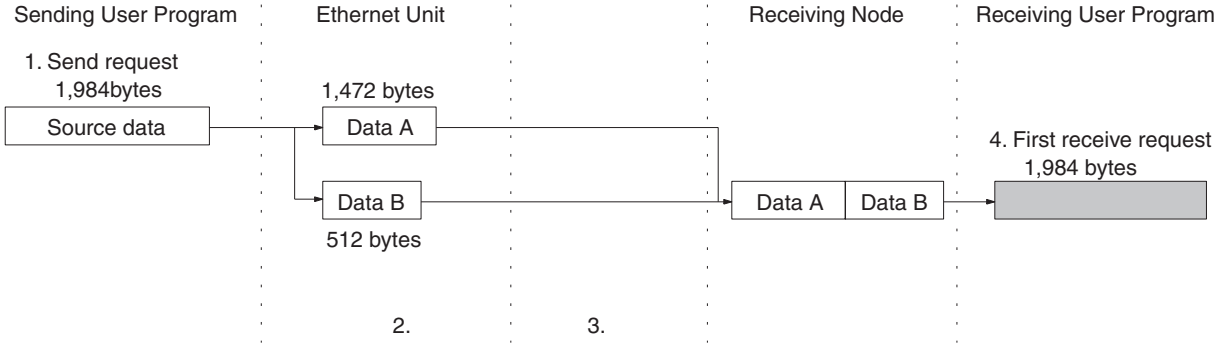

As shown above, the UDP protocol handles data communications as datagrams, so that the send data is restored to the original data before being passed to the user program. Consequently, if the data length in the receive request is set to the length of the send data, the entire data can be received using a single receive data request. However, if the data length in the receive data request is set smaller than the actual length of the data, all received data exceeding the set data length will be discarded.

6-3 Overview

6-3-1 Socket Service Functions

The Ethernet Unit's socket services are used to exchange data between the PLC and general-purpose applications that do not support FINS message communications.The socket services can be used by CS/CJ-series PLCs through the user program by manipulating dedicated control bits (called Socket Service Request Switches) or by executing the CMND(490) instruction.

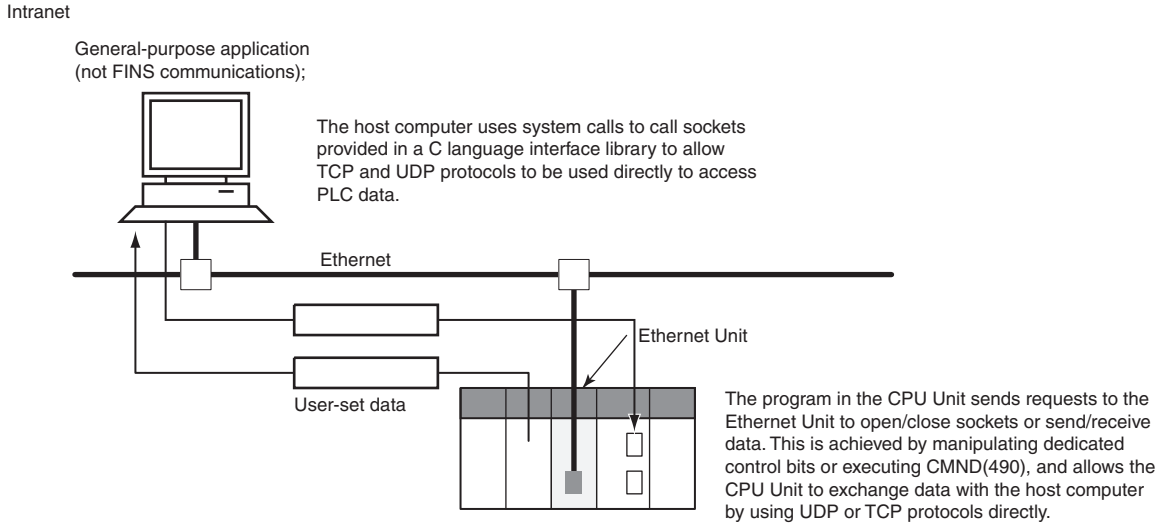

The two methods of using the socket services are as follows:

- Dedicated Control Bits (Socket Service Request Switches)
  Requests can be made to a socket service by setting parameters and then merely manipulating specific Socket Service Request Switches.
- CMND(490)
  Requests can be made to a socket service by sending service request commands to the Ethernet Unit.

Note One of the main differences between using Socket Service Request Switches and using CMND(490) is in the number of sockets that can be connected simultaneously, as shown in the following table.

Protocol	Socket Service Request Switches	CMND(490)
UDP	Total of 8 sockets max.	8 sockets max.
TCP		8 sockets max.

6-3-2 Using Socket Services with Socket Service Request Switches

Socket services can be used by setting the parameters in a Socket Service Parameter Area in the CPU Bus Unit Area and then turning ON a Socket Service Request Switch.

When using Socket Service Request Switches, a maximum of 8 sockets can be opened simultaneously for the UDP and TCP combined. Also, the same socket number cannot be used simultaneously for both UDP and TCP. (There is only one Socket Service Parameter Area for each socket, i.e., the same area must be used for both UDP and TCP.)

An illustration of using Socket Service Request Switches to execute socket services is provided below.

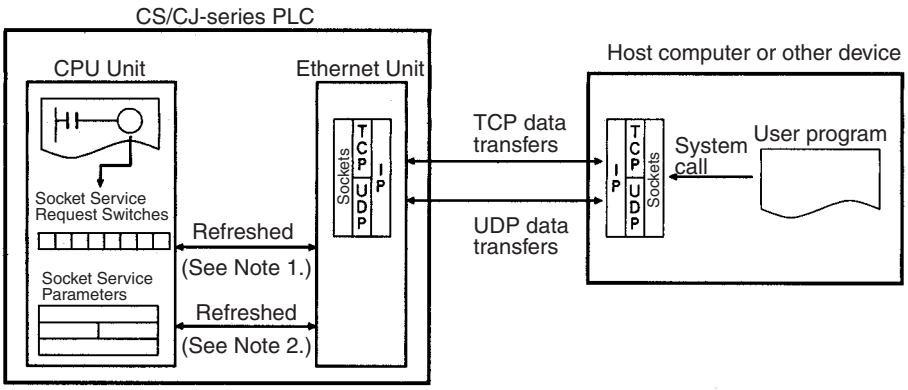

Note
1. Socket Service Request Switches in the CPU Bus Unit Area in the CIO Area are used to send a service request from the CPU Unit to the Ethernet Unit.
2. The Socket Service Parameters in the CPU Bus Unit Area in the DM Area are used to specify the service being requested from the Ethernet Unit. The CPU Bus Unit Area in the DM Area is also used to receive results of processing from the Ethernet Unit to the CPU Unit.

After setting the required parameters in a Socket Service Parameter Area in the CPU Bus Unit Area in the DM Area, the Socket Service Request Switches can be used to request opening, sending, receiving, or closing for either the UDP or TCP protocol. When requesting a send, send data at the send/receive data addresses set in the parameter area is sent. When requesting a

reception, data is received to the send/receive data addresses set in the parameter area.

6-3-3 Using Socket Services with CMND(490)

Service request commands can be sent to the Ethernet Unit by executing the CMND(490) instruction in the ladder diagram. CS/CJ Ethernet Units support the same functionality as the CVM1/CV-series Ethernet Unit, so heritage programs can be easily corrected and reused.

Up to 16 sockets can be connected using CMND(490): 8 UDP sockets and 8 TCP sockets.

The socket service request commands that can be used are listed in the following table. Refer to *Section 7 FINS Commands Addressed to Ethernet Units* in the *Operation Manual, Construction of Networks* for details.

Command code		Name
MRC	SRC	
27	01	UDP OPEN REQUEST
	02	UDP RECEIVE REQUEST
	03	UDP SEND REQUEST
	04	UDP CLOSE REQUEST
	10	TCP PASSIVE OPEN REQUEST
	11	TCP ACTIVE OPEN REQUEST
	12	TCP RECEIVE REQUEST
	13	TCP SEND REQUEST
	14	TCP CLOSE REQUEST

Requests sent to the Ethernet Unit by sending commands through execution of CMND(40), and when the Unit receives a command, it will return a response. The response does not, however, indicate that processing has been completed, and the status of the flags in the Socket Status Words allocated to the Unit must be used to determine when processing has been completed.

The results of processing will be stored in the words specified when CMND(490) was executed once the requested processing has been completed.

6-3-4 Specific Socket Service Functions

The socket service functions listed in the following table can be executed either using Socket Service Request Switches or using CMND(490).

Protocol	Socket service request
UDP	Open UDP socket
	Receive via UDP socket
	Send via UDP socket
	Close UDP socket
TCP	Open TCP socket, passive
	Open TCP socket, active
	Receive via TCP socket
	Send via TCP socket
	Close TCP socket

6-3-5 Differences with Previous Models

Compared with the socket service functions of previous models (CS1W-ETN01/11 and CJ1W-ETN11 Ethernet Units), the Number of Bytes Received at the TCP Socket that stores the size of received data accumulated in the reception buffer and a related Data Received Flag have been added. These new features eliminate the need for ladder programs to monitor the timing for completion of instructions and socket service processing, and thus reduce the amount of labor required for program development.

6-4 Socket Service Function Guide

6-4-1 Manipulating Dedicated Control Bits

■ **Description**

The Ethernet Unit's socket services are used by setting parameters and manipulating bits only.

■ **Point**

This method is used by setting the required parameters in the socket service parameter area allocated in the CPU Bus Unit words in the DM Area, and then turning ON the Socket Service Request Switches in memory.

■ **Advantages/Disadvantages**

A total of eight ports (UDP and TCP combined) can be used for socket services.

6-4-2 Executing CMND(490)

■ **Description**

The socket services are used by sending service request commands to the Ethernet Unit.

■ **Point**

A UDP or TCP socket service is requested by sending a FINS command to the Ethernet Unit by executing CMND(490) from the CPU Unit.

■ **Advantages/Disadvantages**

- Knowledge of FINS commands is required.
- The previous user program can be used without changing because the functions are equivalent to those of CVM1/CV-series Ethernet Units.
- A total of 16 sockets, comprising eight TCP ports and eight UDP ports, can be used.

6-5 Using Socket Service Functions

6-5-1 Procedure

1. Make the basic settings.
   Refer to *SECTION 2 Startup Procedure* in the *Operation Manual Construction of Networks*.

↓

2. Use the CX-Programmer or Programming Console to make the socket service settings in the socket service parameter areas 1 to 8 (m+18 to m+88) allocated in the DM Area.
   Note: The first word m in the allocated DM Area = D30000 + (100 × unit number)

↓

3. Select ***Transfer to PLC*** from the Options Menu, and then click the **Yes** Button. The Setup data in the allocated DM Area will be transferred to the CPU Unit.

↓

4. Use one of the following methods to request socket services.
   Manipulating Dedicated Control Bits
   Turn each of the Socket Service Request Switches 1 to 8 in the CIO Area from OFF to ON.
   Executing the CMND(490) Instruction
   Send each of the socket service requests in FINS commands addressed to the Ethernet Unit.

6-5-2 Settings Required for Socket Service Function

The following settings must be made in the Unit Setup when using socket services.

CX-Programmer Unit Setup Tab	Setting	Setting requirements	Page
Setup	Broadcast	Required.	108
	IP Address	Optional	
	Sub-net Mask	Optional	
	IP Router Table	Optional (Set when Ethernet Unit will communicate through the IP router with a socket on another IP network segment)	
	TCP/IP keep-alive	Optional (Change when the default setting of 120 min is unacceptable.)	

6-5-3 Setup Tab

The CPU Bus Unit System Setup, which is set when using socket services, is shown in the CX-Programmer's Unit Setup Window.

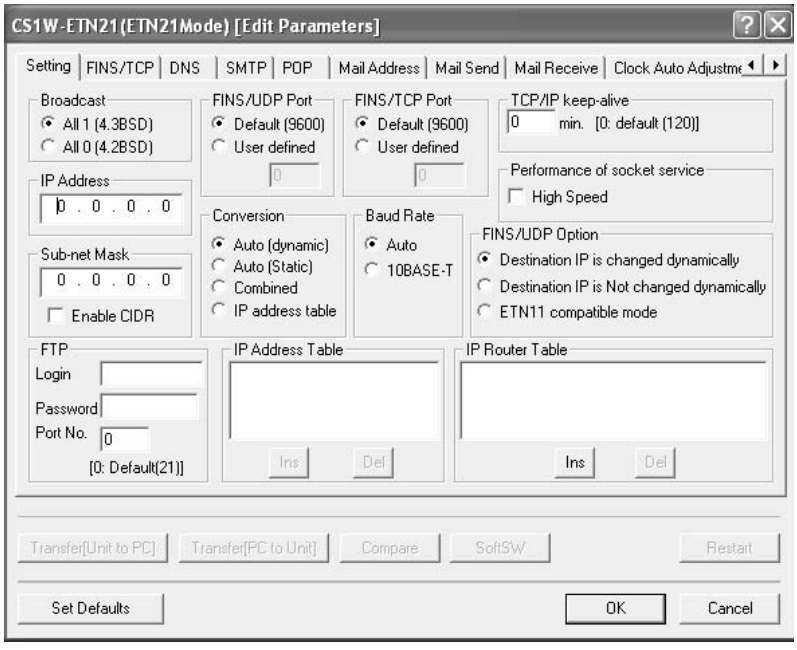

■ **Setup**

Item	Details	Default value
Broadcast	Set the method for specifying IP address when broadcasting with FINS/UDP. • All 1 (4.3BSD): Broadcast with host number set to all ones. • All 0 (4.2BSD): Broadcast with host number set to all zeros. For normal operations use the default: All 1 (4.3BSD)	All 1 (4.3BSD)
IP Address	Set local IP address for Ethernet Unit.	0.0.0.0 (Uses 192.168.250.FINS node address)
Sub-net Mask	Set the subnet mask of the Ethernet Unit. This setting is required when the IP Address Table method is not used for IP address conversion.	0.0.0.0 (Uses default net-mask of IP address setting.)
Enable CIDR	Set the specification for the subnet mask. • Not selected: Set for the range of class A, class B, and class C. • Selected: Classless setting range (192.0.0.0 to 255.255.255.252)	Not selected.
IP Router Table	Set when the Ethernet Unit will communicate with nodes in other IP network segments via an IP router.	None

Item	Details	Default value
TCP/IP keep-alive	Set the liveness checking interval (keep-alive). When using FINS/TCP or TCP/IP socket services, if the remote node (server or client) continues idling (no response) for the duration of time set here or longer, the connection will be closed. (only when using FINS/TCP or TCP/IP socket services). Setting range: 0 to 65535 min The keep-alive setting (remote node liveness checking enabled/disabled) is shared by each connection number set in the FINS/TCP Tab.	0 (120 min)
High-speed Socket Services	Selecting this option improves the performance of processing for sending and receiving using specific bits for socket services. For information on communications performance, refer to *6-9-5 Times Required for Sending and Receiving for Socket Services* in the *Ethernet Units Construction of Applications Operation Manual*. When the High-speed Option is selected, socket services using a CMND(490) instruction will cause an error.	Not selected.

6-6 Socket Service Status

6-6-1 CIO Area Allocations

The following CIO Area words are allocated in the CPU Bus Unit Area in the CIO Area starting at word n+ 1. The value of n can be calculated from the unit number as follows:

Beginning word n = CIO 1500 + (25 x unit number)

■ **UDP/TCP Socket Status (Ethernet Unit to CPU Unit)**

The status of the UDP and TCP sockets is provided in the socket status words shown in the following diagram. There is a status word for each socket for both UDP and TCP.

	15 08 07 00
n+1	UDP Socket No. 1 Status
n+2	UDP Socket No. 2 Status
n+3	UDP Socket No. 3 Status
n+4	UDP Socket No. 4 Status
n+5	UDP Socket No. 5 Status
n+6	UDP Socket No. 6 Status
n+7	UDP Socket No. 7 Status
n+8	UDP Socket No. 8 Status
n+9	TCP Socket No. 1 Status
n+10	TCP Socket No. 2 Status
n+11	TCP Socket No. 3 Status
n+12	TCP Socket No. 4 Status
n+13	TCP Socket No. 5 Status
n+14	TCP Socket No. 6 Status
n+15	TCP Socket No. 7 Status
n+16	TCP Socket No. 8 Status

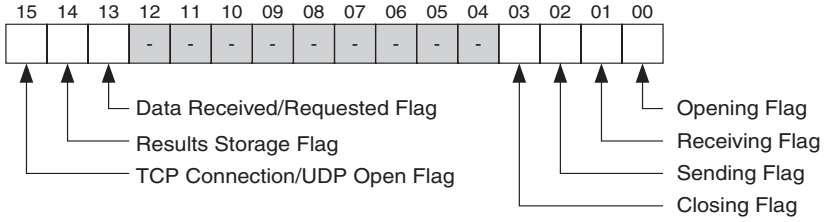

Bit	Switch	Status	Manipulated by	Unit operation
0	Opening Flag	ON	Unit	Turns ON when an open request is received.
		OFF		Turns OFF when open processing has been completed.
1	Receiving Flag	ON		Turns ON when a receive request is received.
		OFF		Turns OFF when receive processing has been completed.
2	Sending Flag	ON		Turns ON when a send request is received.
		OFF		Turns OFF when send processing has been completed.
3	Closing Flag	ON		Turns ON when an close request is received.
		OFF		Turns OFF when close processing has been completed.
13	Data Received Flag	ON		Turns ON when data from a remote node has been received at an open TCP socket.
		OFF		Turns OFF when receive processing has been requested for an open TCP socket.
14	Results Storage Error Flag	ON		Turns ON if there is an error in the Results Storage Area specified for the socket service request command to the Ethernet Unit. This flag turns ON at the same time as any of the services request processing flags (bits 0 to 3) turn ON again (i.e, at completion of processing).
		OFF		Turns OFF when the next request is received.
15	TCP Connection/UDP Open Flag	ON		Turns ON when UDP open processing has been completed or when a TCP connection is made.
		OFF		Turns OFF when close processing has been completed. (Will remain OFF when open processing ends in an error.)

6-6-2 DM Area Allocations

The following DM Area words are allocated in the CPU Bus Unit Area in the DM Area. The beginning word m is calculated by the following equation.

Beginning word m = D30000 + (100 x unit number)

■ Number of Bytes Received at TCP Socket (Ethernet Unit to CPU Unit)

The number of bytes of data saved in the reception buffer at the TCP socket is stored in the TCP Connection Status words. The Data Received Flag in the CIO Area turns ON/OFF in response to the status of these words. When the dedicated control bits (switches) are manipulated or the receive request is sent by executing the CMND(490) instruction, the values of these words are temporarily set to 0000 hexadecimal.

If any data remains in the reception buffer after the receive request processing is complete, the number of bytes is stored in the Number of Bytes Received at TCP Socket and the Data Received Flag turns ON again.

Receive requests should be executed after confirming that the required data is contained in the number of bytes received.

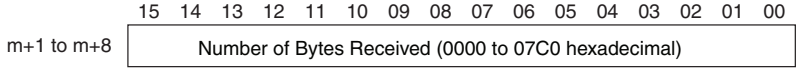

Up to 4,096 bytes of data are stored in the reception buffer, but the value stored is within the range (maximum: 1,984 bytes) that can be set by manipulating the control bits or sending the receive request in the CMND(490) instruction.

0000 hexadecimal: 0 bytes

07C0 hexadecimal: 1,984 bytes

■ TCP Connection Status (Ethernet Unit to CPU Unit)

The TCP Connection Status shows the status of a port that has been opened using the TCP socket. This port status is stored even after the port is closed, and remains until the socket is used to open the port again.

The TCP Connection Status Bits are not synchronized with the Socket Status words, however, so the status conversion timing is slightly different.

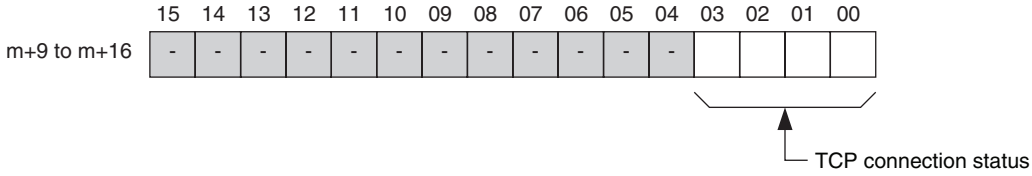

The status is shown in bits 0 to 3 (1-digit hexadecimal), as follows:

Number	Status	Meaning
00000000	CLOSED	Connection closed.
00000001	LISTEN	Waiting for connection.
00000002	SYN SENT	SYN sent in active status.
00000003	SYN RECEIVED	SYN received and sent.
00000004	ESTABLISHED	Already established.
00000005	CLOSE WAIT	FIN received and waiting for completion.
00000006	FIN WAIT1	Completed and FIN sent.
00000007	CLOSING	Completed and exchanged FIN. Awaiting ACK.
00000008	LAST ACK	FIN sent and completed. Awaiting ACK.
00000009	FIN WAIT2	Completed and ACK received. Awaiting FIN.
0000000A	TIME WAIT	After closing, pauses twice the maximum segment life (2MSL).

6-7 Using Socket Services by Manipulating Dedicated Control Bits

6-7-1 Application Procedure

Procedure

1,2,3... 1. Set the socket service parameters in the CPU Bus Unit Area in the DM Area.

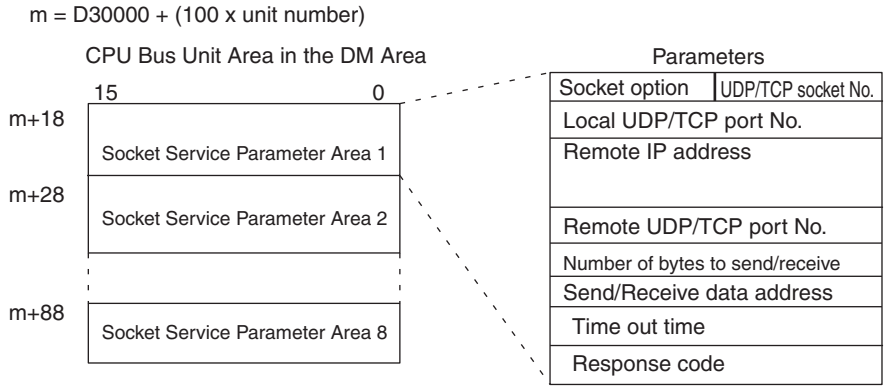

2. Turn ON the Socket Service Request Switches in the CPU Bus Unit Area in the CIO Area.

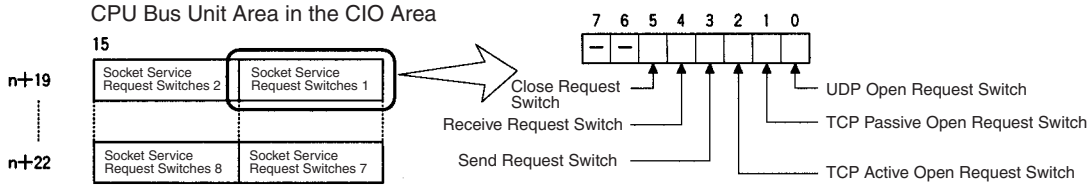

3. When a send or receive request is made, the data will be automatically sent or received according to the send/receive data address in the Socket Service Parameter Area. When processing has been completed, a response code will be automatically stored in the Socket Service Parameters.

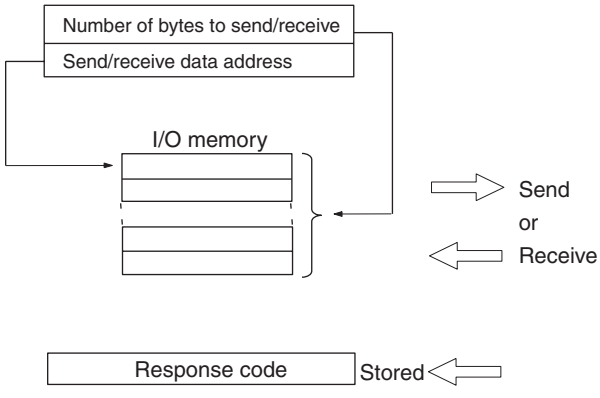

Precautions

A Socket Service Parameter Area cannot be used for other sockets once open processing has been successfully completed for it. Check the socket

status before attempting to open a socket. TCP socket status is provided in words m+9 to m+16 in the DM Area for sockets 1 to 8.

Starting from unit version 1.5, the performance of sending and receiving has been improved using optional settings for the TCP or UDP socket services using specific bits. Also, a linger socket option has been added to the TCP socket services. Selecting this option enables immediate open processing using the same ports without having to wait (approximately 1 min.) until the port number opens after the socket closes.

6-7-2 Socket Services and Socket Status

When using socket services, it is important to consider the timing of the status changes in the Socket Status Area. The diagram below shows a flowchart for opening UDP.The flow is similar for other socket services. Replace the names of the appropriate flags in the flowchart to adapt it to other socket services.

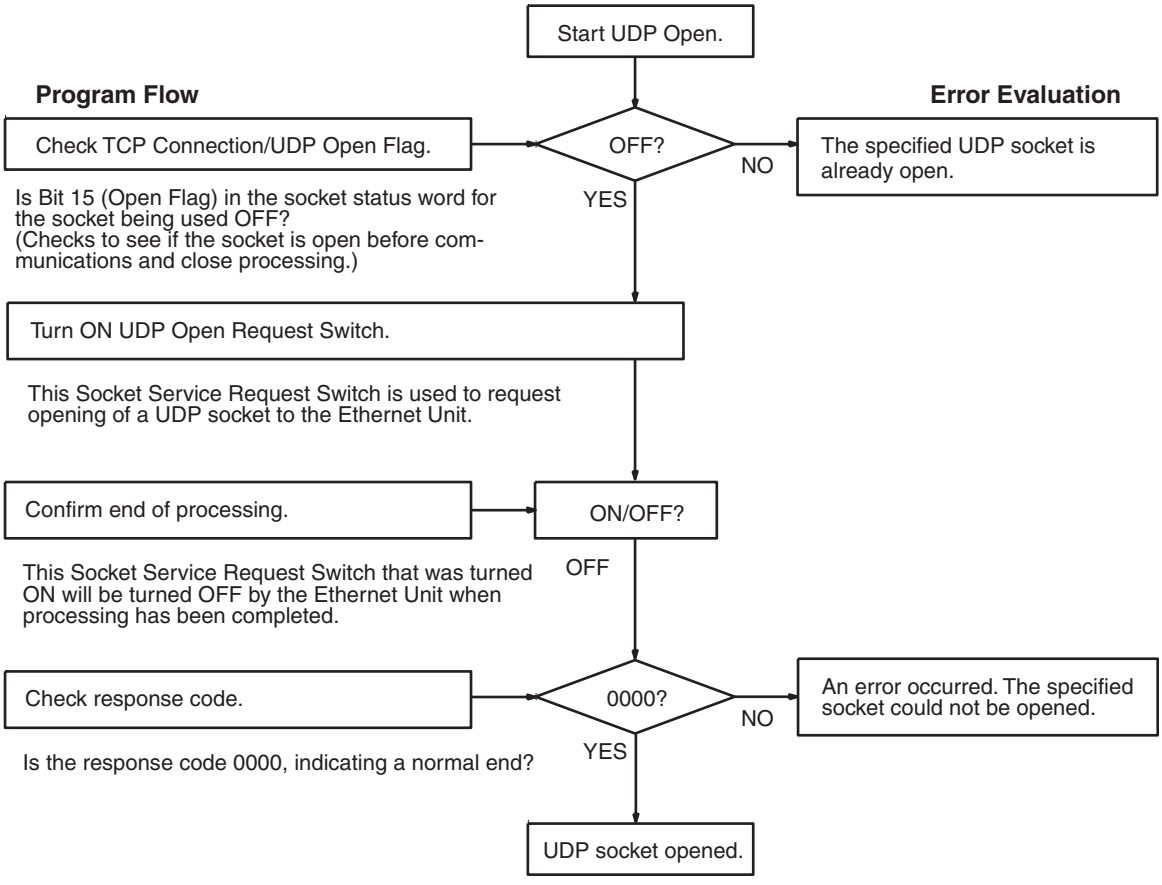

6-7-3 Socket Service Parameters

The Socket Service Parameter Areas in which parameters are set to request socket services are in the CPU Bus Unit Area in the DM Area of the CPU Unit. The Socket Service Parameter Areas are allocated as shown in the following diagrams. The first word of in the DM Area allocated to the Ethernet Unit as a CPU Bus Unit is referred to as “m” and is calculated as follows:

m = D30000 + (100 × unit number)

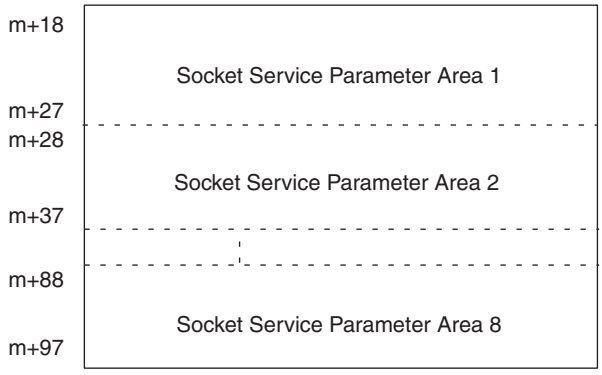

The configuration of each of the Socket Service Parameter Areas is shown in the following diagram.

Offset	15 14 13 12 11 10 09 08	07 06 05 04 03 02 01 00
+0	Socket option	UDP/TCP socket number
+1	Local UDP/TCP port number (0000 to FFFF Hex)	
+2	Remote IP address (00000000 to FFFFFFFF Hex)	
+3		
+4	Remote UDP/TCP port number (0000 to FFFF Hex)	
+5	Number of bytes to send/receive (0000 to 07C0 Hex)	
+6	Send/receive data address	
+7		
+8	Timeout value (0000 to FFFF Hex)	
+9	Response code	

Parameter Settings

The following table shows the parameters that are required for each service and the use of the parameters by the socket service.

UDP Socket Services

Parameter	No. of words	Range (decimal values in parentheses)	Socket service			
			UDP open	UDP receive	UDP send	UDP close
Socket option	1	Specified bit	---	---	---	---
UDP/TCP socket No.		0001 to 0008 hexadecimal (1 to 8)	W	W	W	W
Local UDP/TCP port No.	1	0000 to FFFF hexadecimal (0 to 65,535)	W	---	---	---
Remote IP address	2	00000000 to FFFFFFFF hexadecimal (0.0.0.0 to 255.255.255.255)	---	R	W	---
Remote UDP/TCP port No.	1	0000 to FFFF hexadecimal (0 to 65,535)	---	R	W	---
Number of bytes to send/receive	1	0000 to 07C0 hexadecimal (0 to 1,984 bytes)	---	RW	RW	---
Send/Receive data address	2	Memory area address	---	W	W	---
Time out time (Unit: 100 ms)	1	0000 to FFFF hexadecimal (0 to 65,535) (0: No limit, 0.1 to 6,553.5 s)	---	W	---	---
Response code	1	---	R	R	R	R

Note W: Written by user
RW: Written by user at execution and then read for results at completion
R: Read by user for results at completion
---: Not used.

TCP Socket Services

Parameter	No. of words	Range (decimal values in parentheses)	Socket service				
			TCP passive open	TCP active open	TCP receive	TCP send	TCP close
Socket option	1	Specified bit	W	W	---	---	---
UDP/TCP socket No.		0001 to 0008 hexadecimal (1 to 8)	W	W	W	W	W
Local UDP/TCP port No.	1	0000 to FFFF hexadecimal (0 to 65,535)	W	RW	---	---	---
Remote IP address	2	00000000 to FFFFFFFF hexadecimal (0.0.0.0 to 255.255.255.255	RW	W	---	---	---
Remote UDP/TCP port No.	1	0000 to FFFF hexadecimal (0 to 65,535)	RW	W	---	---	---
Number of bytes to send/ receive	1	0000 to 07C0 hexadecimal (0 to 1,984 bytes)	---	---	RW	RW	---
Send/Receive data address	2	Memory area address	---	---	W	W	---
Time out time (Unit: 100 ms)	1	0000 to FFFF hexadecimal (0 to 65,535) (0: No limit, 0.1 to 6,553.5 s)	W	---	W	---	---
Response code	1	---	R	R	R	R	R

Note W: Written by user
RW: Written by user at execution and then read for results at completion

R: Read by user for results at completion
---: Not used.

6-7-4 Parameters

■ Socket Option

For the TCP OPEN REQUEST (ACTIVE or PASSIVE) command, specifies whether or not the keep-alive function is to be used. When the keep-alive function is used, bit 8 is ON (set to 1).

Turn ON bit 9 (set to 1) to use the linger function.

■ UDP/TCP Socket No.

Specify the number of the UDP or TCP socket to open.

■ Local UDP/TCP Port No.

Specify the number of the UDP or TCP port for the socket to use for communications.

- Do not specify the port being used as the FINS UDP port (default: 9600) in an open request for a UDP socket.
- Do not specify FTP server TCP port numbers 20 and 21 in an open request for a TCP port.
- Do not specify mail communications TCP port number 25.
- As a rule, use port numbers 1,024 and higher.

If port number 0 is specified when for an active TCP open, the TCP port number will be automatically allocated and the number of the port that was opened will be stored in the local UDP/TCP port number in the Socket Service Parameter Area (i.e., the actual port number will be overwritten on the value of 0 set by the user).

■ Remote IP Address

Specify the IP address of the remote device.

- Offset +2 in the Socket Service Parameter Area contains the upper bytes of the Remote IP Address, and offset +3 contains the lower bytes.
  Example: The contents of offsets +2 and +3 would be as shown below when the Remote IP Address is 196.36.32.55 (C4.24.20.37 hexadecimal).
  +2: C424
  +3: 2037
- This parameter is not used when making a receive request for a UDP socket. The remote IP address will be stored with the response data and will be written as the Remote IP Address in the Socket Service Parameter Area.
- When opening a passive TCP socket, the combination of the remote IP address and the remote TCP port number can be used to affect processing as shown in the following table.

Remote IP Address	Remote TCP Port No.	Processing
0	0	All connection requests accepted.
0	Not 0	Connection requests accepted only for the same port number.
Not 0	0	Connection requests accepted only for the same IP address.
Not 0	Not 0	Connection requests accepted only for the same port number and IP address.

If the Remote IP Address is set to 0, a connection can be made to any remote node and the remote IP address of the node that is connected will be stored as the Remote IP Address in the Socket Service Parameter Area. If a specific remote I/O address is set, then a connection can be made only to the node with the specified address.

If the Remote TCP Port No. is set to 0, a connection can be made to any remote node regardless of the TCP port number it is using. If a specific remote TCP port number is set, then a connection can be made only to a node using the specified TCP port number.

■ Remote UDP/TCP Port No.

Specify the UDP or TCP port number used by the remote device.

- This parameter is not used when making a receive request for a UDP socket. The remote UDP/TCP port number will be stored with the response data and will be written as the Remote UDP/TCP Port No. in the Socket Service Parameter Area.
- When opening a passive TCP socket, the combination of the remote IP address and the remote TCP port number can be used to affect processing as shown in the table for the Remote IP Address, above. If the Remote UDP/TCP Port No. is set to 0, the UDP/TCP port number of the remote device will be written as the Remote UDP/TCP Port No. in the Socket Service Parameter Area.

■ Time Out Time

Set the time limit in units of 0.1 s for completion of communications from the time that the Receive Request Switch (TCP or UDP) or the TCP Passive Open Request Switch is turned ON. A response code of 0080 hexadecimal (timeout) will be stored if communications time out. If 0 is set, the requested service will not be timed.

■ Number of Bytes to Send/Receive

Send the number of bytes to be sent or the number of bytes to receive. When the transfer has been completed, the actual number of bytes that have been sent or received will be written here.

■ Send/Receive Data Address

Specify the address of the first word to send or the address of the first word where data is to be received. Always set the bit number to 00 hexadecimal.

Offset	15 … 8	7 … 0
+6	Area designation	Leftmost 2 digits of word address
+7	Rightmost 2 digits of word address	Bit number (always 00 Hex)

The following specifications can be used.

Area		Word address	Area designation (hexadecimal)	Word address (hexadecimal)
CIO, HR, and AR Areas	CIO	0000 to 6143	B0	0000 to 17FF
	HR	H000 to H511	B2	0000 to 01FF
	AR	A448 to A959	B3	01C0 to 03BF
DM Area	DM	D00000 to D32767	82	0000 to 7FFF
EM Area	Bank 0	E0_00000 to E0_32767	A0	0000 to 7FFF
	:	:	:	:
	Bank C	EC_00000 to EC_32767	AC	0000 to 7FFF

6-7-5 Socket Service Request Switches

Dedicated control bits can be manipulated to request socket services. These bits are called Socket Service Request Switches, and are turned ON in the CPU Unit to request socket services through the Ethernet Unit.

The Socket Service Request Switches are allocated in the CPU Bus Unit Area in the CIO Area starting at the word n + 19. The value of n can be calculated from the unit number as follows:

n = CIO 1500 + (25 × unit number)

Offset	15 … 08	07 … 00
n+19	Socket Service Request Switches 2	Socket Service Request Switches 1
n+20	Socket Service Request Switches 4	Socket Service Request Switches 3
n+21	Socket Service Request Switches 6	Socket Service Request Switches 5
n+22	Socket Service Request Switches 8	Socket Service Request Switches 7

The configuration of each set of Socket Service Request Switches is shown in the following diagram.

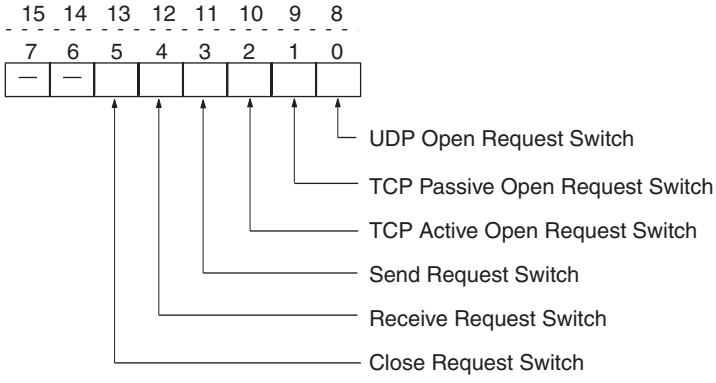

Bit		Switch	Status	Manipulated by	Unit operation
08	00	UDP Open Request Switch	ON	User	UDP socket opened when switch is turned ON.
			OFF	Unit	Unit turns OFF switch when open processing has been completed (i.e., when a connection has been made).
09	01	TCP Passive Open Request Switch	ON	User	Passive TCP socket opened when switch is turned ON.
			OFF	Unit	Unit turns OFF switch when open processing has been completed (i.e., when a connection has been made).
10	02	TCP Active Open Request Switch	ON	User	Active TCP socket opened when switch is turned ON.
			OFF	Unit	Unit turns OFF switch when open processing has been completed (i.e., when a connection has been made).
11	03	Send Request Switch	ON	User	Send processing executed when switch is turned ON. (The protocol (TCP/UDP) is determined when the socket is opened.)
			OFF	Unit	Unit turns OFF switch when send processing has been completed.
12	04	Receive Request Switch	ON	User	Receive processing executed when switch is turned ON. (The protocol (TCP/UDP) is determined when the socket is opened.)
			OFF	Unit	Unit turns OFF switch when receive processing has been completed.

Bit		Switch	Status	Manipulated by	Unit operation
13	05	Close Request Switch	ON	User	Close processing executed when switch is turned ON. (The protocol (TCP/UDP) is determined when the socket is opened.)
			OFF	Unit	Unit turns OFF switch when close processing has been completed.

As shown in the above table, the Request Switches are turned OFF by the Ethernet Unit when the requested processes has been completed.

Note There is also a Socket Force-close Switch in bit 2 of the first word allocated to the Ethernet Unit in the CPU Bus Unit Area in the CIO Area. When the Socket Force-close Switch is turned ON, all sockets that are open will be force-closed. Refer to *Section 4 Ethernet Unit Memory Allocations* in the *Operation Manual, Construction of Networks* for details.

When using socket services with the Socket Service Request Switches, the ladder diagram should be programmed to check the response codes when Socket Service Request Switches are turned OFF.

6-7-6 Response Codes

When processing of a request has been completed for socket services executed using Socket Service Request Switches, a response code will be stored in the Response Code word in the Socket Service Parameter Area. The following response codes will be stored depending on the service that was requested.

UDP Socket Open Request

Response code	Meaning
0000	Normal end
0105	Local IP address setting error.
0302	CPU Unit error; cannot execute.
1100	UDP socket number is not 1 to 8 or local UDP port number is 0.
110C	Request Switch turned ON during other processing.
220F	Specified socket is already open.
2211	Unit is busy; cannot execute.
2606	Specified socket is already open as TCP socket; cannot open UDP socket.
2607	Specified Socket Service Parameter Area is already being used for another socket.
003E	Internal buffer cannot be obtained due to high reception traffic (ENOBUFS).
0049	The same UDP port number has been specified more than once (EADDRINUSE).
0081	The specified socket was closed during open processing.

UDP Socket Receive Request

Response code	Meaning
0000	Normal end
0302	CPU Unit error; cannot execute.
1100	Number of bytes to receive is not in allowable range.
1101	The area designation of the Send/Receive Data Address is not in allowable range.

Response code	Meaning
1103	The bit number in the Send/Receive Data Address is not 00.
110C	Request Switch turned ON during other processing.
220F	Specified socket is already processing a receive request.
2210	The specified socket is not open.
2211	Unit is busy; cannot execute service.
2607	Specified Socket Service Parameter Area is already being used for another socket.
003E	Internal buffer cannot be obtained due to high reception traffic (ENOBUFS).
0066	Internal memory cannot be obtained; cannot execute service.
0080	Receive request timed out.
0081	The specified socket was closed during reception processing.

UDP Socket Send Request

Response code	Meaning
0000	Normal end
0302	CPU Unit error; cannot execute.
1100	Number of bytes to send is not in allowable range or the remote IP address is 0.
1101	The area designation of the Send/Receive Data Address is not in allowable range.
1103	The bit number in the Send/Receive Data Address is not 00.
110C	Request Switch turned ON during other processing.
220F	Specified socket is already processing a send request.
2210	The specified socket is not open.
2211	Unit is busy; cannot execute.
2607	Specified Socket Service Parameter Area is already being used for another socket.
003E	Internal buffer cannot be obtained due to high reception traffic (ENOBUFS).
0042	The remote IP address is a broadcast address and the number of bytes to send is greater than 1,472 bytes (EMSGSIZE).
004C	The network ID is incorrect or the remote IP address is incorrect (EADDRNOTAVAIL)
004E	The network ID is not in the IP router table, router settings are incorrect, or the remote IP address is incorrect (ENETUNREACH).
0051	The router settings are incorrect or the remote IP address is incorrect (EHOSTUNREACH).
0081	The specified socket was closed during send processing.

UDP Socket Close Request

Response code	Meaning
0000	Normal end
0302	CPU Unit error; cannot execute.
2210	The specified socket is not open.
2211	Unit is busy; cannot execute.
2607	Specified Socket Service Parameter Area is already being used for another socket.

TCP Socket Passive Open Request

Response code	Meaning
0000	Normal end
0105	Local IP address setting error.
0302	CPU Unit error; cannot execute.
1100	TCP socket number is not 1 to 8 or local TCP port number is 0.
110C	Request Switch turned ON during other processing.
220F	Specified socket is already open or already processing an open request.
2211	Unit is busy; cannot execute.
2606	Specified socket is already open as UDP socket; cannot open TCP socket.
2607	Specified Socket Service Parameter Area is already being used for another socket.
003E	Internal buffer cannot be obtained due to high reception traffic (ENOBUFS).
0042 (See note.)	An error occurred. (EMSGSIZE).
0045	Error in communications with remote node (ECONNABORTED).
0049	The same TCP port number has been specified more than once (EADDRINUSE).
004A (See note.)	Error (ECONNREFUSED).
004B (See note.)	Error in communications with remote node (ECONNRESET).
004E (See note.)	Remote IP address parameter error (ENETUNREACH).
0051 (See note.)	Remote IP address parameter error (EHOSTUNREACH).
0053	Error in communications with remote node (ETIMEDOUT) or remote node does not exist.
0066	Internal memory cannot be obtained; cannot execute.
0080	Open request timed out.
0081	The specified socket was closed during open processing.
0082	Connection could not be established with specified remote node.

Note These response codes will be returned only on large, multilevel networks.

TCP Socket Active Open Request

Response code	Meaning
0000	Normal end
0105	Local IP address setting error.
0302	CPU Unit error; cannot execute.
1100	TCP socket number is not 1 to 8 or local TCP port number is 0.
110C	Request Switch turned ON during other processing.
220F	Specified socket is already open or already processing an open request.
2211	Unit is busy; cannot execute.
2606	Specified socket is already open as UDP socket; cannot open TCP socket.
2607	Specified Socket Service Parameter Area is already being used for another socket.

Response code	Meaning
000D	Remote IP address parameter error (EACCES).
003E	Internal buffer cannot be obtained due to high reception traffic (ENOBUFS).
0042 (See note.)	Error (EMSGSIZE).
0044	ICMP data received (ENOPROTOOPT).
0045	Error in communications with remote node (ECONNABORTED).
0049	The same port number has been specified more than once (EADDRINUSE).
004A	Error (ECONNREFUSED) or the remote node has not been opened as passive socket.
004B (See note.)	Error in communications with remote node (ECONNRESET).
004C	Remote IP address parameter error (EADDRNOTAVAIL). Wrong parameter designation. An attempt was made to set the local TCP port of the local node to Active Open.
004E	Remote IP address parameter error (ENETUNREACH). The network ID is not in the IP router table or router settings are incorrect.
0051	Remote IP address parameter error (EHOSTUNREACH). The router settings are incorrect.
0053	Communications error with remote node (ETIMEDOUT). No remote node.
0081	The specified socket was closed during open processing.

Note These response codes will be returned only on large, multilevel networks.

TCP Socket Receive Request

Response code	Meaning
0000	Normal end
0302	CPU Unit error; cannot execute.
1100	Number of receive bytes not in allowable range.
1101	The area designation of the Send/Receive Data Address is not in allowable range.
1103	The bit number in the Send/Receive Data Address is not 00.
110C	Request Switch turned ON during other processing.
220F	Specified socket is already processing a receive request.
2210	Specified socket has not been connected.
2211	Unit is busy; cannot execute.
2607	Specified Socket Service Parameter Area is already being used for another socket.
003E	Internal buffer cannot be obtained due to high reception traffic (ENOBUFS).
0042 (See note.)	ICMP data received (EMSGSIZE).
0044 (See note.)	ICMP data received (ENOPROTOOPT).
0045 (See note.)	Error in communications with remote node (ECONNABORTED).
004B	Error in communications with remote node (ECONNRESET).
004E (See note.)	ICMP data received (ENETUNREACH).

Response code	Meaning
004F (See note.)	ICMP data received (EHOSTDOWN).
0051 (See note.)	ICMP data received (EHOSTUNREACH).
0053	Error in communications with remote host (ETIMEDOUT).
0066	Internal memory cannot be obtained; cannot execute.
0080	Receive request timed out.
0081	The specified socket was closed during receive processing.

Note These response codes will be returned only on large, multilevel networks.

TCP Socket Send Request

Response code	Meaning
0000	Normal end
0302	CPU Unit error; cannot execute.
1100	Number of bytes to send not in allowable range.
1101	The area designation of the Send/Receive Data Address is not in allowable range.
1103	The bit number in the Send/Receive Data Address is not 00.
110C	Request Switch turned ON during other processing.
220F	Specified socket is already processing a send request.
2210	The specified socket is not been connected.
2211	Unit is busy; cannot execute.
2607	Specified Socket Service Parameter Area is already being used for another socket.
0020	Connection with remote socket broken during send (EPIPE).
003E	Internal buffer cannot be obtained due to high reception traffic (ENOBUFS).
0042 (See note.)	The remote IP address is a broadcast address and the number of bytes to send is greater than 1,472 bytes (EMSGSIZE).
0044 (See note.)	ICMP data received (ENOPROTOOPT).
0045 (See note.)	Error in communications with remote node (ECONNABORTED).
004A	Error in communications with remote node (ECONNREFUSED).
004B (See note.)	Error in communications with remote node (ECONNRESET).
004E (See note.)	Remote IP address parameter error (ENETUNREACH).
004F (See note.)	ICMP data received (EHOSTDOWN).
0051 (See note.)	Remote IP address parameter error (EHOSTUNREACH).
0053 (See note.)	Error in communications with remote node (ETIMEDOUT).
0081	The specified socket was closed during send processing.

Note These response codes will be returned only on large, multilevel networks.

TCP Socket Close Request

Response code	Meaning
0000	Normal end
0302	CPU Unit error; cannot execute.
2210	The specified socket is not been connected.
2211	Unit is busy; cannot execute.
2607	Specified Socket Service Parameter Area is already being used for another socket.

6-7-7 Timing Charts

The timing of flags for socket services (Opening, Receiving, Sending, or Closing Flag) when the Request Switches are used and the changes in the response code are shown in the following chart.

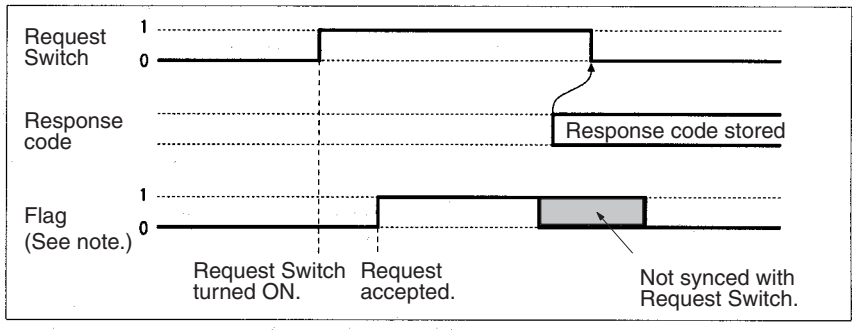

Note Starting with unit version 1.5, the Sending Flag and Receiving Flag will not turn ON if the high-speed socket service option is selected. Therefore, the program can be controlled only by setting the Send Request Switch and Receive Request Switch to OFF.

Closing during Other Processes

The Close Request Switch or Force-close Switch can be used to close a socket even when open, receive, or send processing is being executed. Closing is the only other process that is possible during other processes.

Close Request Switch

The processing results are stored as the response code when the Close Request Switch is used. There will always be one PLC cycle time between turning OFF the Request Switch for the canceled process and turning of the Close Request Switch, allowing time for the response code to be read.

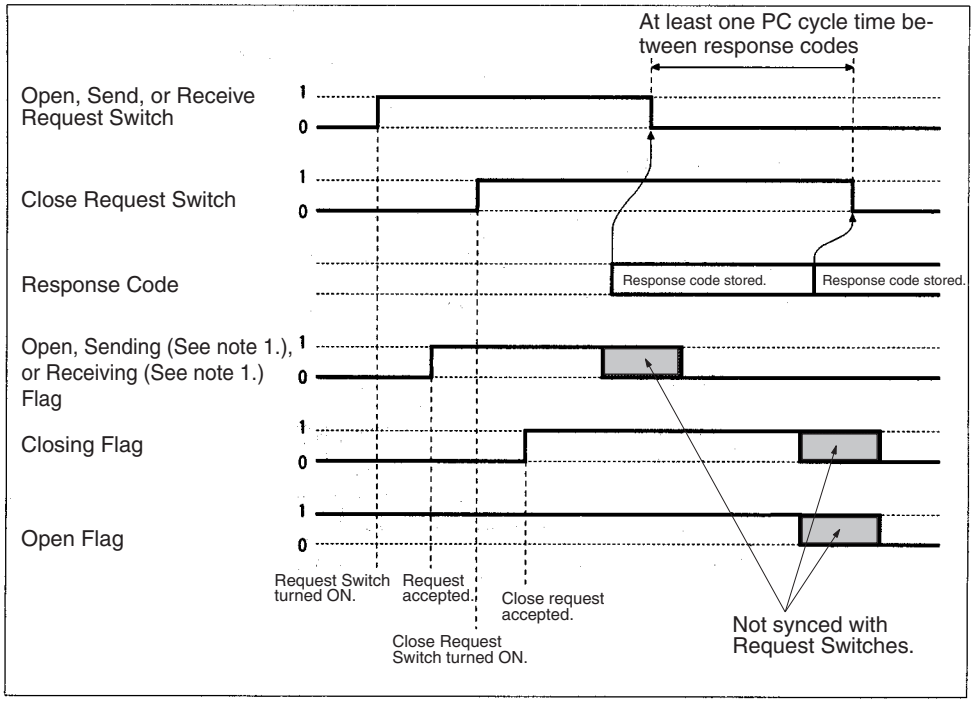

Note

1. Starting with unit version 1.5, the Sending Flag and Receiving Flag will not turn ON if the high-speed socket service option is selected.
2. The Open Flag will not turn ON at all if a close request is made during open processing.

Force-close Switch

The requested processes are canceled and an response code is stored when the Force-close Switch is used.

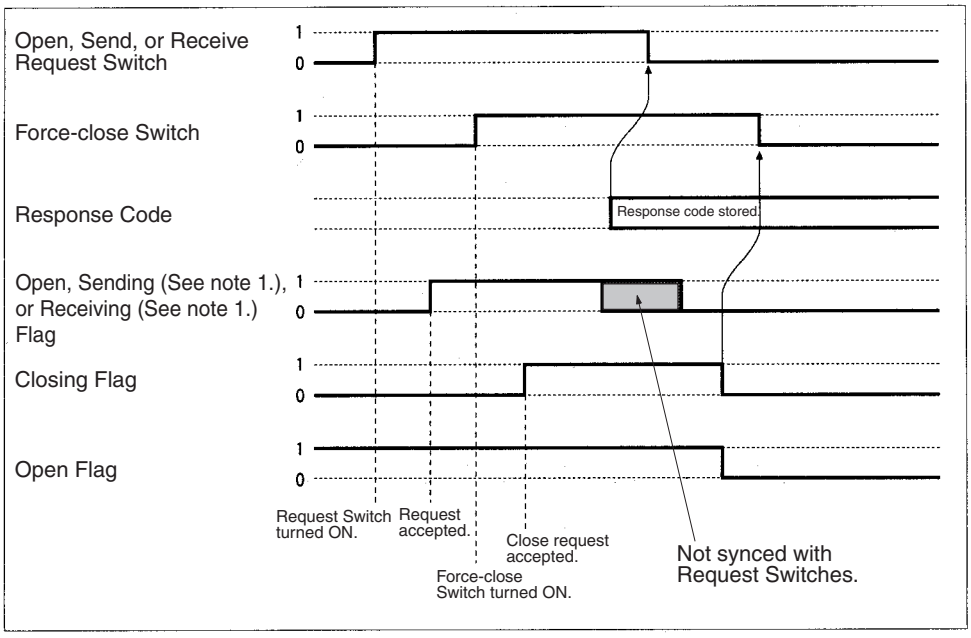

Note 1. Starting with unit version 1.5, the Sending Flag and Receiving Flag will not turn ON if the high-speed socket service option is selected.

2. The Open Flag will not turn ON at all if a force-close request is made during open processing.

6-7-8 TCP/IP Communications Programming Example

The following programming example illustrates transferring 100 bytes of data between an Ethernet Unit and a host computer using TCP/IP communications.

System Configuration

The programming example uses the following system configuration. For the TCP connection, the Ethernet Unit uses a passive open and the host computer uses an active open.

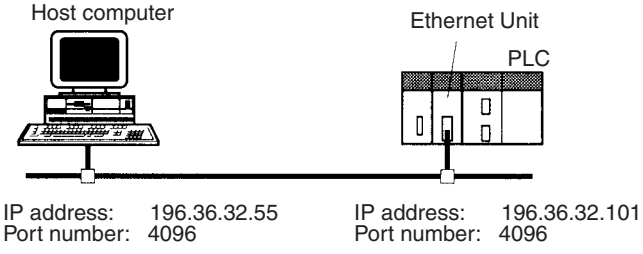

Data Flow

The data will flow between the CPU Unit, Ethernet Unit, and host computer as shown in the following diagram.

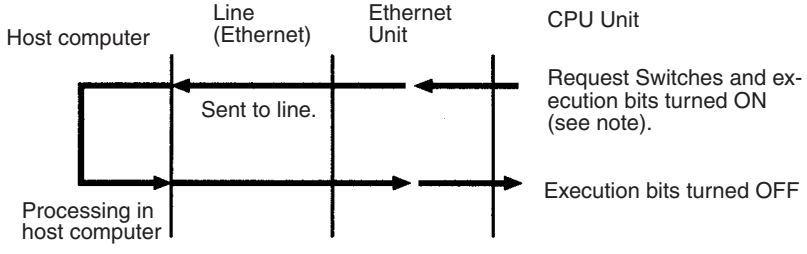

Note Here, "execution bits" refer to CIO 0000.00 to CIO 0000.03, which are used in the ladder diagram to control execution of communications.

Basic Operations

- CIO 0000.00 is turned ON to request opening a TCP socket from the Ethernet Unit.
- CIO 0000.01 is turned ON to request closing the TCP socket from the Ethernet Unit.
- CIO 0000.02 is turned ON to request sending data from the Ethernet Unit. Data (100 bytes) is sent beginning at D00000.
- CIO 0000.03 is turned ON to request receiving data from the Ethernet Unit. The data that is received (100 bytes) is stored beginning at D01000.
- One of the bits between CIO 0001.00 and CIO 0001.03 will turn ON if an error occurs. Refer to *6-7-5 Socket Service Request Switches* for information on errors.

Program Memory Map

The send and receive data and bits (flags) used by the program are shown in the following diagram.

DM Area

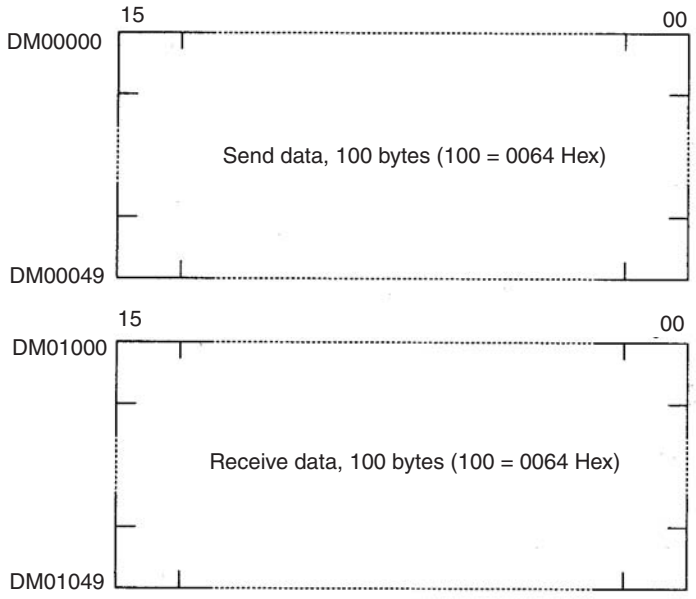

CIO Area

	15		03	02	01	00
CIO 0000			TCP Receive Bit	TCP Send Bit	TCP Close Bit	TCP Open Bit
CIO 0001			TCP Receive Error Flag	TCP Send Error Flag	TCP Close Error Flag	TCP Open Error Flag
CIO 0002			TCP Receiving Flag	TCP Sending Flag	TCP Closing Flag	TCP Opening Flag

Programming Example

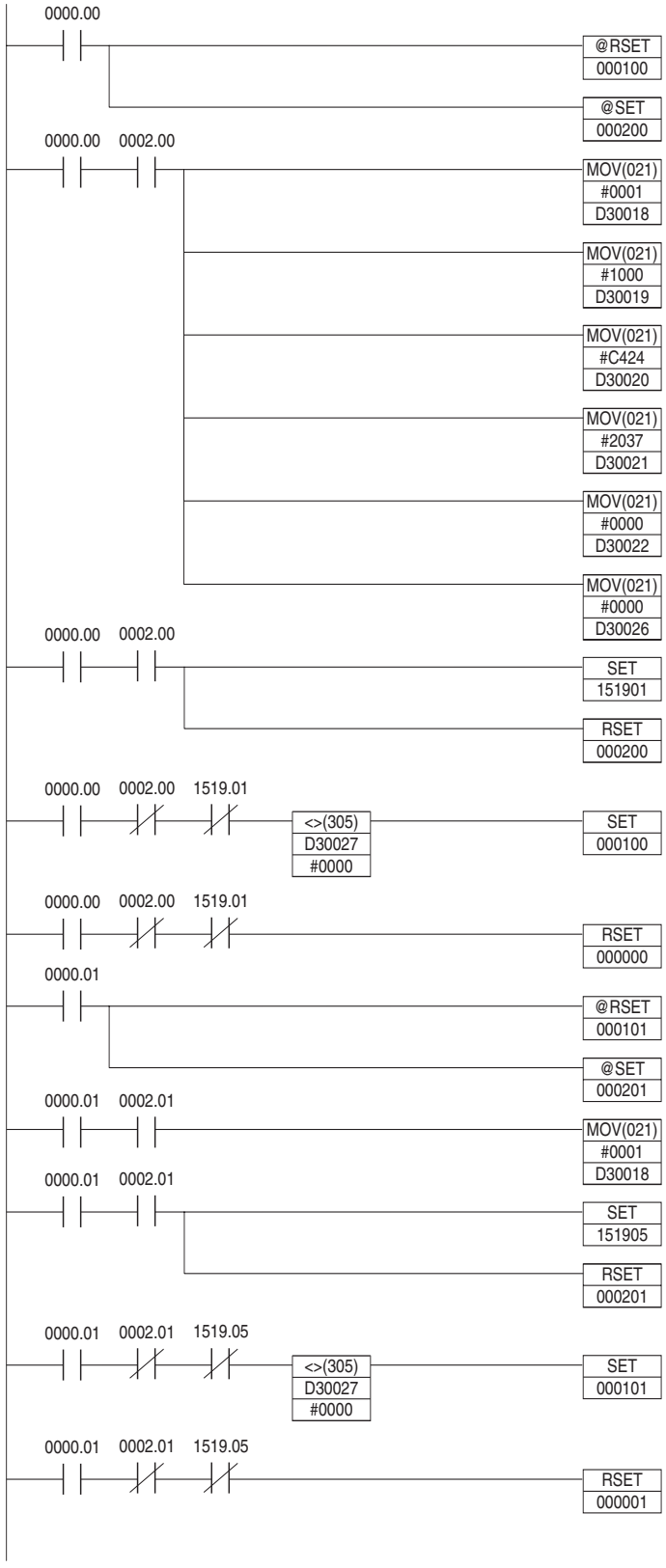

TCP Passive Open

When the TCP Open Bit (CIO 0000.00) turns ON, the TCP Open Error Flag (CIO 0001.00) is turned OFF and the TCP Opening Flag (CIO 0002.00) is turned ON to initialize processing.

When the TCP Opening Flag (CIO 0002.00) turns ON, the following parameters are written to the parameter area for socket number 1.
D30018: 0001 Hex = UDP/TCP socket No. 1
D30019: 1000 Hex = Local UDP/TCP port No. 4096
D30020 and D30021:
C424 2037 Hex =
Remote IP address 196.36.32.55
D30022: 0000 Hex = Any remote UDP/TCP port No.
D30026: 0000 Hex = No timeout time

After the parameters have been set, the TCP Passive Open Request Switch (CIO 1519.01) is turned ON and the TCP Opening Flag (CIO 0002.00) is turned OFF.

If the TCP Passive Open Request Switch (CIO 1519.01) turns OFF while the TCP Opening Flag (CIO 0002.00) is OFF, the contents of the response code (D30027) in the Socket Service Parameter Area is checked, and if it is not 0000 Hex (normal end), the TCP Open Error Flag (CIO 0001.00) is turned ON.

After the execution results have been checked, the TCP Open Bit (CIO 0000.00) is turned OFF.

TCP Close

When the TCP Close Bit (CIO 0000.01) turns ON, the TCP Close Error Flag (CIO 0001.01) is turned OFF and the TCP Closing Flag (CIO 0002.01) is turned ON to initialize processing.

When the TCP Closing Flag (CIO 0002.01) turns ON, the following parameter is written to the parameter area for socket number 1.
D30018: 0001 Hex = UDP/TCP socket No. 1

After the parameter has been set, the Close Request Switch (CIO 1519.05) is turned ON and the TCP Closing Flag (CIO 0002.01) is turned OFF.

If the Close Request Switch (CIO 1519.05) turns OFF while the TCP Opening Flag (CIO 0002.01) is OFF, the contents of the response code (D30027) in the Socket Service Parameter Area is checked, and if it is not 0000 Hex (normal end), the TCP Close Error Flag (CIO 0001.01) is turned ON.

After the execution results have been checked, the TCP Close Bit (CIO 0000.01) is turned OFF.

Continued on next page.

Continued from previous page.

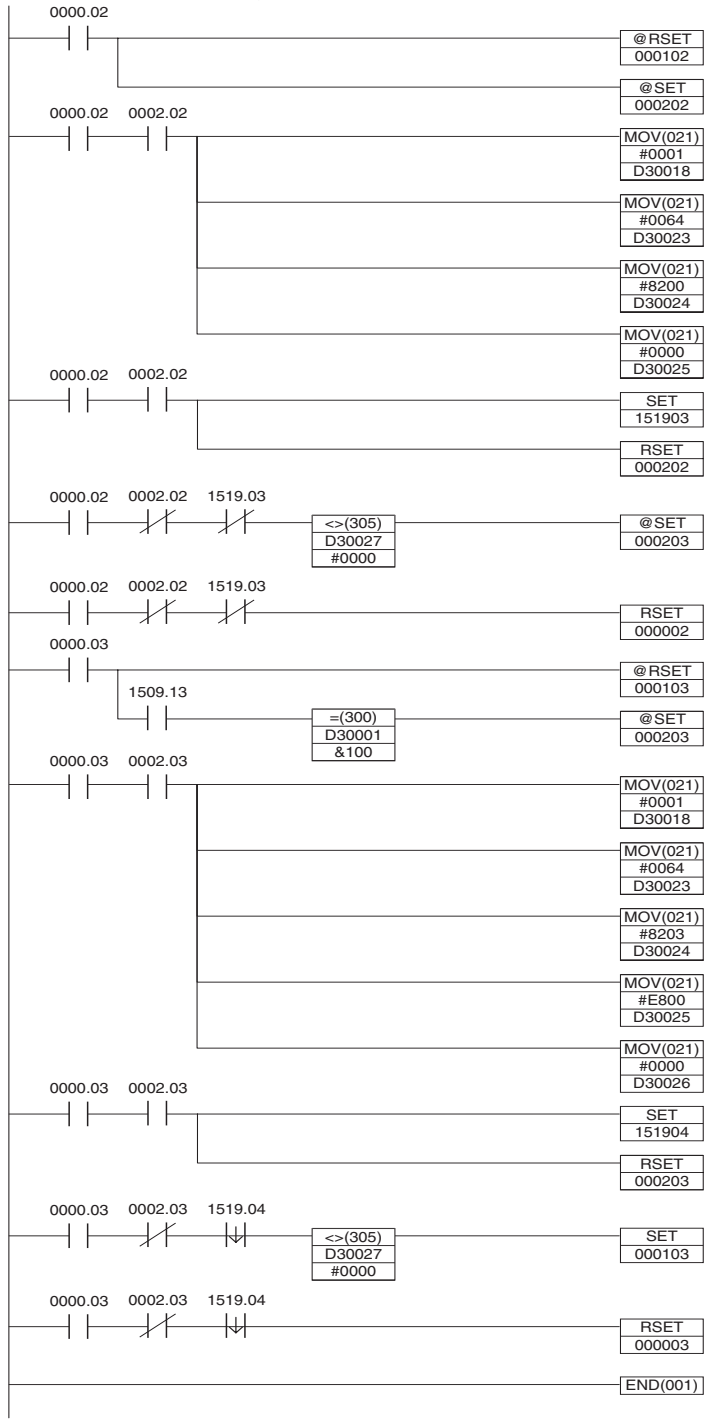

TCP Send

When the TCP Send Bit (CIO 0000.02) turns ON, the TCP Send Error Flag (CIO 0001.02) is turned OFF and the TCP Sending Flag (CIO 0002.02) is turned ON to initialize processing.

When the TCP Sending Flag (CIO 0002.02) turns ON, the following parameters are written to the parameter area for socket number 1.
D30018: 0001 Hex = UDP/TCP socket No. 1
D30023: 0064 Hex = No. of send/receive bytes is 100
D30024 and D30025:
8200 0000 Hex =
Send/receive data address D00000

After the parameters have been set, the Send Request Switch (CIO 1519.03) is turned ON and the TCP Sending Flag (CIO 0002.02) is turned OFF.

If the Send Request Switch (CIO 1519.03) turns OFF while the TCP Sending Flag (CIO 0002.02) is OFF, the contents of the response code (D30027) in the Socket Service Parameter Area is checked, and if it is not 0000 Hex (normal end), the TCP Send Error Flag (CIO 0001.02) is turned ON.

After the execution results have been checked, the TCP Send Bit (CIO 0000.02) is turned OFF.

TCP Receive

When the TCP Receive Bit (CIO 0000.03) turns ON, the TCP Receive Error Flag (CIO 0001.03) is turned OFF and the TCP Data Received/Requested Flag (CIO 1509.13), and the Number of Bytes Received at TCP Socket (D30001) are checked. If the data is stored in the buffer, the TCP Receiving Flag (CIO 0002.03) turns ON.

When the TCP Receiving Flag (CIO 0002.03) turns ON, the following parameters are written to the parameter area for socket number 1.
D30018: 0001 Hex = UDP/TCP socket No. 1
D30023: 0064 Hex = No. of send/receive bytes is 100
D30024 and D30025:
8203 E800 Hex =
Send/receive data address D01000
D30026: 0000 Hex = No timeout time.

After the parameter has been set, the Receive Request Switch (CIO 1519.04) is turned ON and the TCP Receiving Flag (CIO 0002.03) is turned OFF.

If the Receive Request Switch (CIO 1519.04) turns OFF while the TCP Receiving Flag (CIO 0002.03) is OFF, the contents of the response code (D30027) in the Socket Service Parameter Area is checked, and if it is not 0000 Hex (normal end), the TCP Receive Error Flag (CIO 0001.03) is turned ON.

After the execution results have been checked, the TCP Receive Bit (CIO 0000.03) is turned OFF.

Note When using the above programming example, change the bit and word addresses as necessary to avoid using the same areas used by other parts of the user program or the CPU Bus Unit.

6-7-9 UDP/IP Communications Programming Example

The following programming example illustrates transferring 100 bytes of data between an Ethernet Unit and a host computer using UDP/IP communications.

System Configuration

The programming example uses the following system configuration.

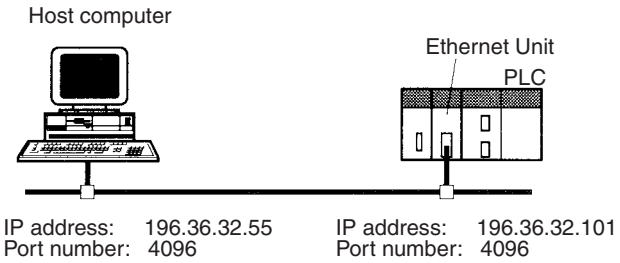

Basic Operations

- CIO 0000.00 is turned ON to request opening a UDP socket from the Ethernet Unit.
- CIO 0000.01 is turned ON to request closing the UDP socket from the Ethernet Unit.
- CIO 0000.02 is turned ON to request sending data from the Ethernet Unit. The data is sent (100 bytes) beginning from word D000.00.
- CIO 0000.03 is turned ON to request receiving data from the Ethernet Unit. The data that is received (100 bytes) is stored beginning at D010.00.
- One of the bits between CIO 0001.00 and CIO 0001.03 will turn ON if an error occurs. Refer to *6-7-5 Socket Service Request Switches* for information on errors.

Program Memory Map

The send and receive data and bits (flags) used by the program are shown in the following diagram.

DM Area

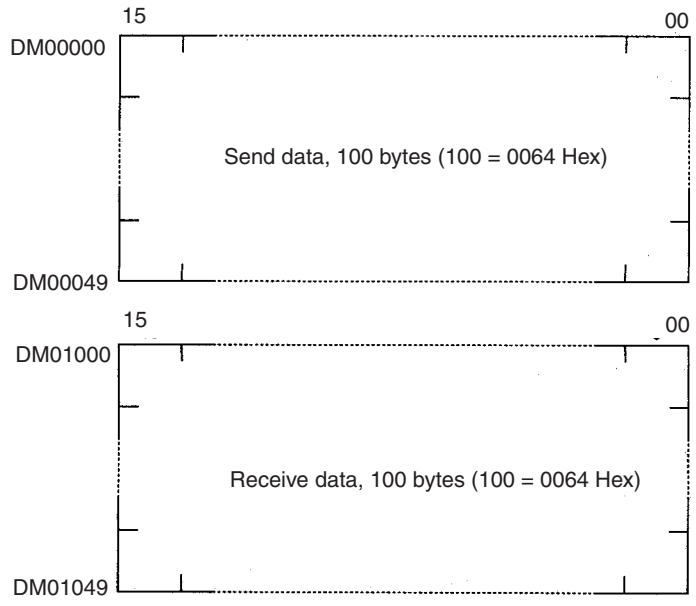

CIO Area

	15		03	02	01	00
CIO 0000			UDP Receive Bit	UDP Send Bit	UDP Close Bit	UDP Open Bit
CIO 0001			UDP Receive Error Flag	UDP Send Error Flag	UDP Close Error Flag	UDP Open Error Flag
CIO 0002			UDP Receiving Flag	UDP Sending Flag	UDP Closing Flag	UDP Opening Flag

Programming Example

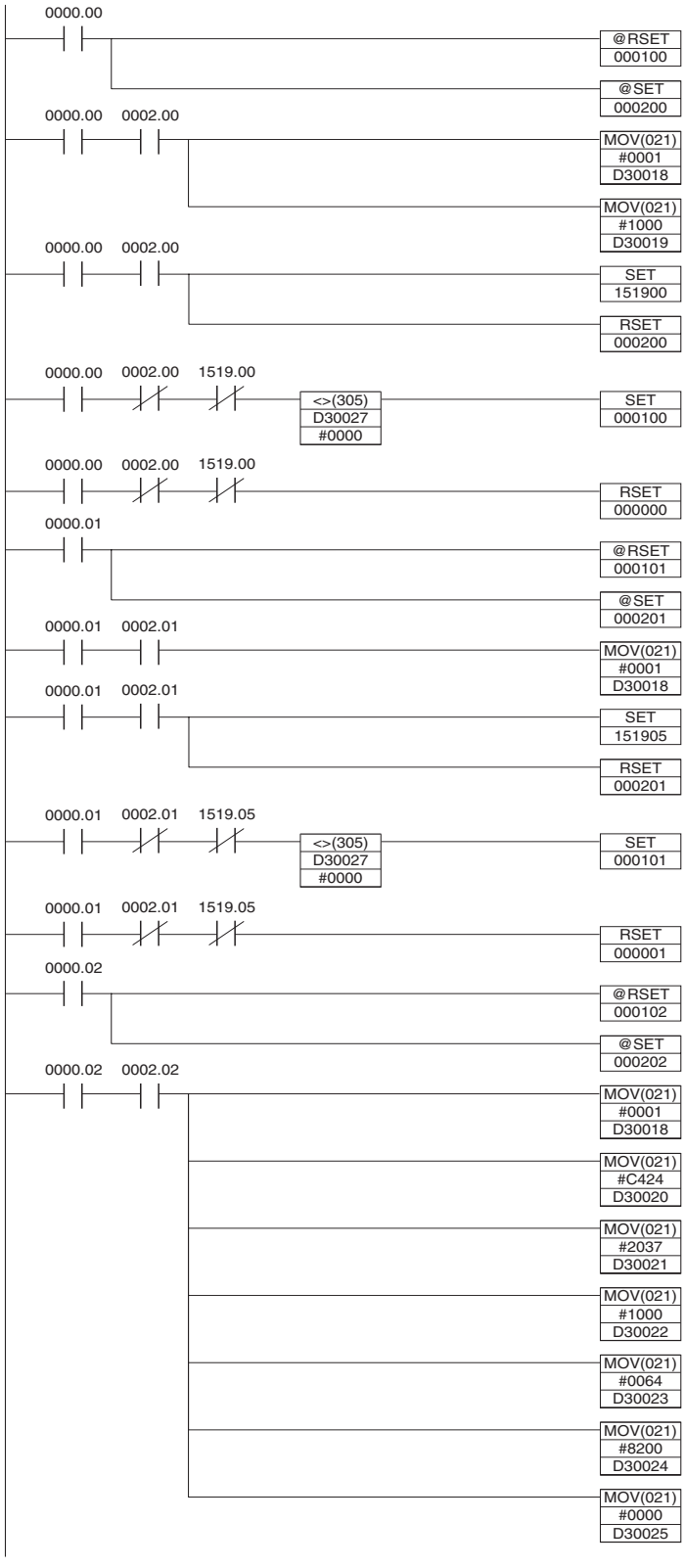

UDP Open

When the UDP Open Bit (CIO 0000.00) turns ON, the UDP Open Error Flag (CIO 0001.00) is turned OFF and the UDP Opening Flag (CIO 0002.00) is turned ON to initialize processing.

When the UDP Opening Flag (CIO 0002.00) turns ON, the following parameters are written to the parameter area for socket number 1.
D30018: 0001 Hex = UDP/TCP socket No. 1
D30019: 1000 Hex = Local UDP/TCP port No. 4096

After the parameters have been set, the UDP Open Request Switch (CIO 1519.00) is turned ON and the UDP Opening Flag (CIO 0002.00) is turned OFF.

If the UDP Open Request Switch (CIO 1519.00) turns OFF while the UDP Opening Flag (CIO 0002.00) is OFF, the contents of the response code (D30027) in the Socket Service Parameter Area is checked, and if it is not 0000 Hex (normal end), the UDP Open Error Flag (CIO 0001.00) is turned ON.

After the execution results have been checked, the UDP Open Bit (CIO 0000.00) is turned OFF.

UDP Close

When the UDP Close Bit (CIO 0000.01) turns ON, the UDP Close Error Flag (CIO 0001.01) is turned OFF and the UDP Closing Flag (CIO 0002.01) is turned ON to initialize processing.

When the UDP Closing Flag (CIO 0002.01) turns ON, the following parameter is written to the parameter area for socket number 1.
D30018: 0001 Hex = UDP/TCP socket No. 1

After the parameter has been set, the Close Request Switch (CIO 1519.05) is turned ON and the UDP Closing Flag (CIO 0002.01) is turned OFF.

If the Close Request Switch (CIO 1519.05) turns OFF while the UDP Opening Flag (CIO 0002.01) is OFF, the contents of the response code (D30027) in the Socket Service Parameter Area is checked, and if it is not 0000 Hex (normal end), the UDP Close Error Flag (CIO 0001.01) is turned ON.

After the execution results have been checked, the UDP Close Bit (CIO 0000.01) is turned OFF.

UDP Send

When the UDP Send Bit (CIO 0000.02) turns ON, the UDP Send Error Flag (CIO 0001.02) is turned OFF and the UDP Sending Flag (CIO 0002.02) is turned ON to initialize processing.

When the UDP Sending Flag (CIO 0002.02) turns ON, the following parameters are written to the parameter area for socket number 1.
D30018: 0001 Hex = UDP/TCP socket No. 1
D30020 and D30021:
C424 2037 Hex =
Remote IP address 196.36.32.55
D30022: 1000 Hex = Remote UDP/TCP port No. 4096
D30023: 0064 Hex = No. of send/receive bytes is 100
D30024 and D30025:
8200 0000 Hex =
Send/receive data address D00000

Continued on next page.

Continued from previous page.

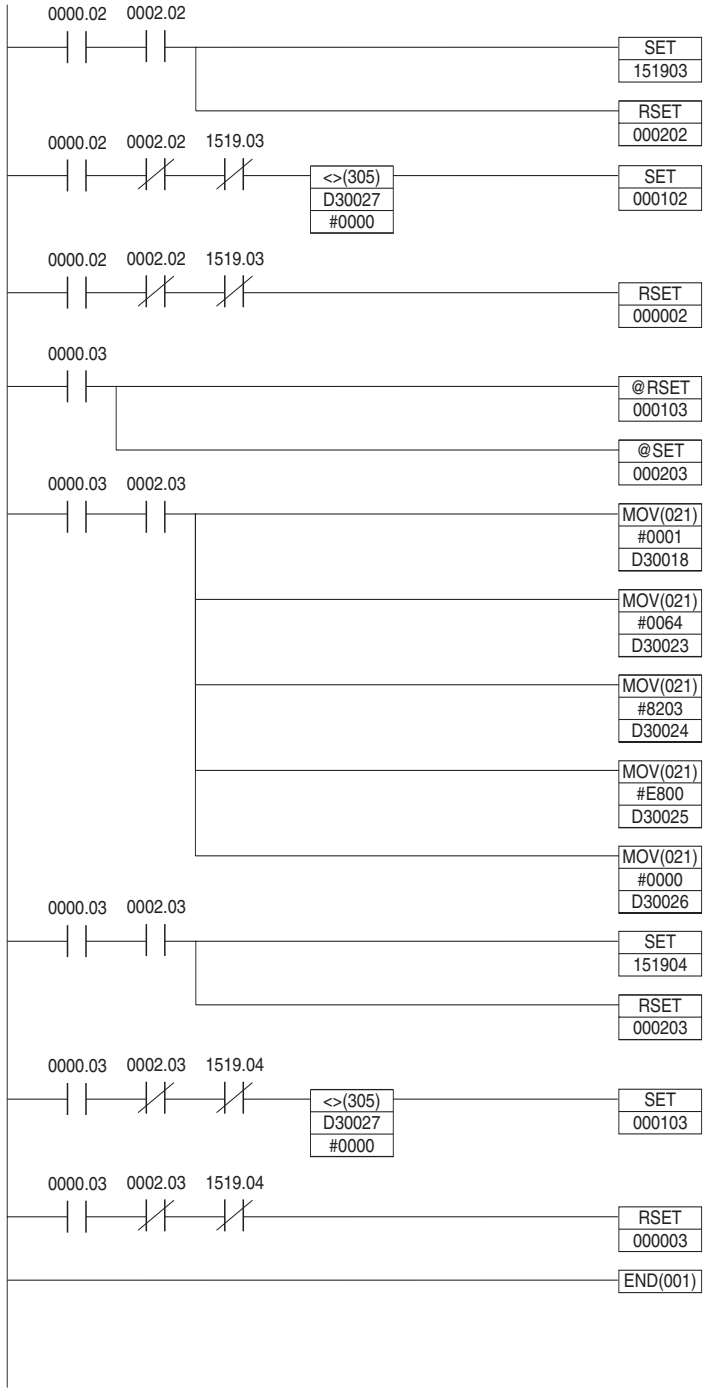

After the parameters have been set, the Send Request Switch (CIO 1519.03) is turned ON and the UDP Sending Flag (CIO 0002.02) is turned OFF.

If the Send Request Switch (CIO 1519.03) turns OFF while the UDP Sending Flag (CIO 0002.00) is OFF, the contents of the response code (D30027) in the Socket Service Parameter Area is checked, and if it is not 0000 Hex (normal end), the UDP Send Error Flag (CIO 0001.02) is turned ON.

After the execution results have been checked, the UDP Send Bit (CIO 0000.02) is turned OFF.

UDP Receive

When the UDP Receive Bit (CIO 0000.03) turns ON, the UDP Receive Error Flag (CIO 0001.03) is turned OFF and the UDP Receiving Flag (CIO 0002.03) is turned ON to initialize processing.

When the UDP Receiving Flag (CIO 0002.03) turns ON, the following parameters are written to the parameter area for socket number 1.
D30018: 0001 Hex = UDP/TCP socket No. 1
D30023: 0064 Hex = No. of send/receive bytes is 100
D30024 and D30025:
8203 E800 Hex =
Send/receive data address D01000
D30026: 0000 Hex = No timeout time.

After the parameter has been set, the Receive Request Switch (CIO 1519.04) is turned ON and the UDP Receiving Flag (CIO 0002.03) is turned OFF.

If the Receive Request Switch (CIO 1519.04) turns OFF while the UDP Receiving Flag (CIO 0002.03) is OFF, the contents of the response code (D30027) in the Socket Service Parameter Area is checked, and if it is not 0000 Hex (normal end), the UDP Receive Error Flag (CIO 0001.03) is turned ON.

After the execution results have been checked, the UDP Receive Bit (CIO 0000.03) is turned OFF.

Note When using the above programming example, change the bit and word addresses as necessary to avoid using the same areas used by other parts of the user program or the CPU Bus Unit.

6-8 Using Socket Services with CMND(490)

6-8-1 Using Socket Service

Each Ethernet Unit has eight TCP sockets and eight UDP sockets. Open, close, send, and receive processes are available for communications with sockets.

Open

Enables communications on a specified socket. A socket must be opened before it can be used for socket services. Opening a TCP socket establishes a connection.

Close

Ends use of the socket. Breaks the connection for a TCP socket.

Send

Sends data from a specified open socket.

Receive

Specifies an open socket and receives data from that socket.

These processes are carried out by sending FINS commands to the Ethernet Unit. The process from sending a request for processing to completion is shown in the following illustrations.

1,2,3...

1. Execute a socket service request command (MRC: 27) for the Ethernet Unit using CMND(490).

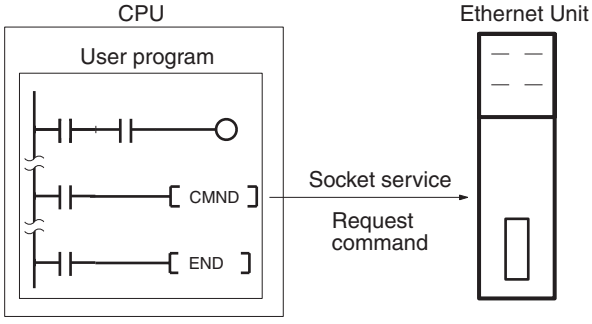

2. CMND(490) ends normally when the socket service request command is received and a response is returned (response code: 0000).

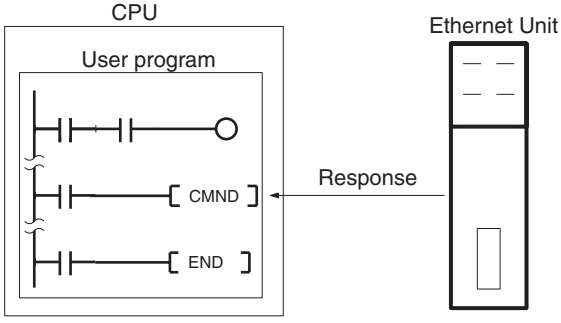

3. The Ethernet Unit starts the process requested by the parameters in the socket service request command.

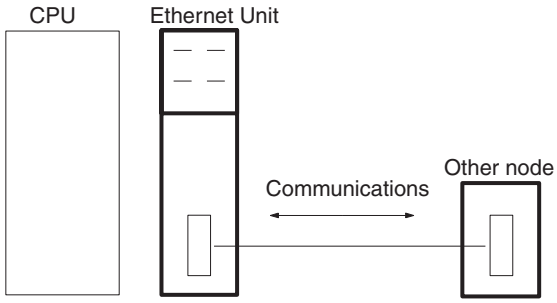

4. When the process has been completed, the result is stored in the results storage area defined in the socket service request command and the socket status will indicate completion of processing.

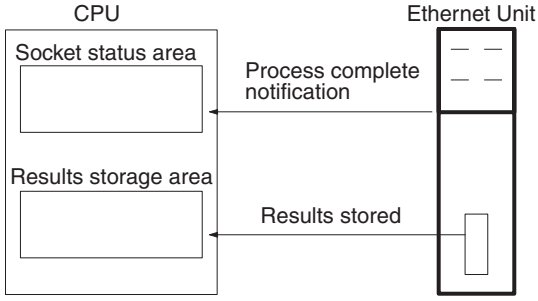

6-8-2 Socket Services and Socket Status

When using socket services, it is important to consider the timing of the status changes in the socket status area. The diagram below shows a program flowchart for opening UDP.

Program flow is similar for other socket services. Replace the names of the appropriate flags in the flowchart to adapt it to other socket services.

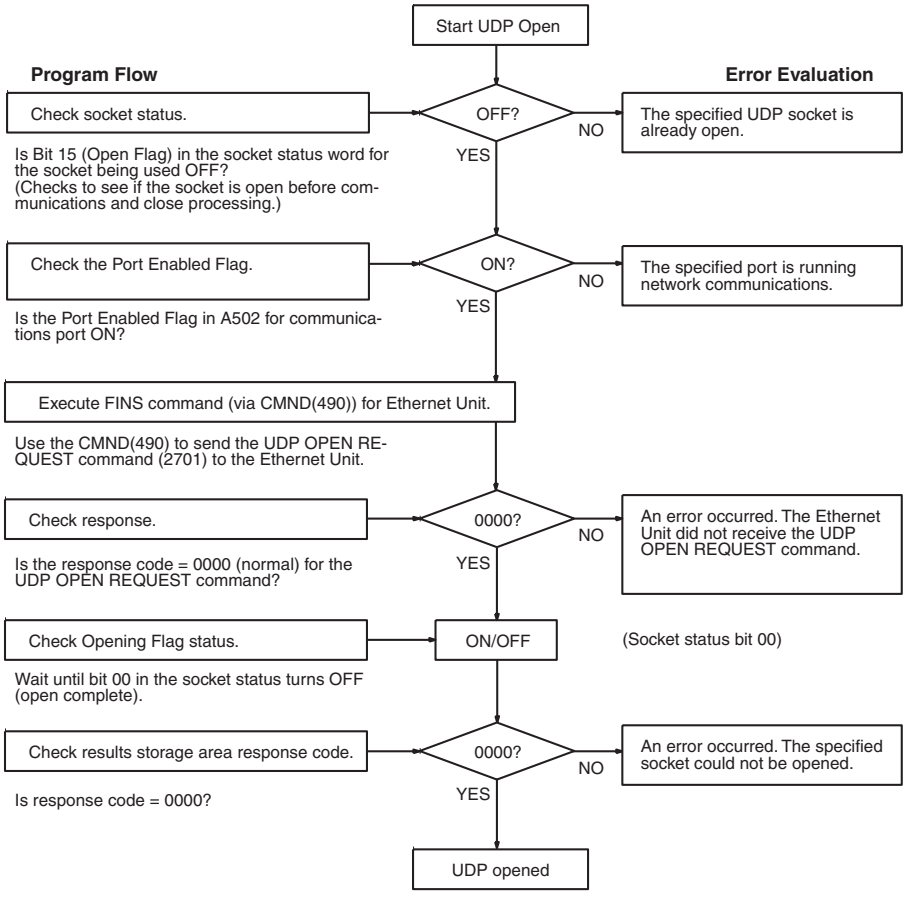

6-8-3 Basic FINS Command Format

The basic format for FINS commands used for socket services is shown in the following diagram.

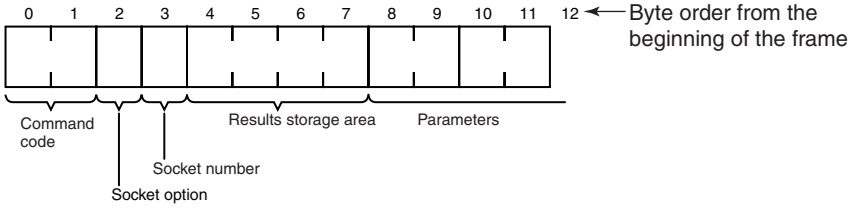

Command Code:

Specifies the process code requested from the socket.

Socket Option

For the TCP OPEN REQUEST (ACTIVE or PASSIVE) command, specifies whether or not the keep-alive function is to be used.

Socket Number

Specifies the socket number for the process, between 1 and 8.

Results Storage Area

Specifies the area to store the results of the requested process.

Parameters

Specifies the parameters defined for the command code.

Note If there is more than one Communications Unit mounted to the PLC, the FINS network address must be set as a parameter for CMND(490) and a local network table must be created in the routing tables from the CX-Programmer.

6-8-4 Response Codes in the Command Response

A response code is returned in the command response as a 2-byte code that indicates the results of command execution. The response code is returned just after the command code in the response. The first byte of the response code provides the overall result of command execution and is called the main response code (MRES). The second byte provides details and is called the sub-response code (SRES).

6-8-5 Response Codes in the Results Storage Areas

The response code stored in the Results Storage Area is a 2-byte code that indicates the processing results of the socket service requested by the command. This response code is stored in the Results Storage Area when processing has been completed.

6-8-6 Communications Timing Chart

The timing of the status changes of the bits in the socket status area and the Port Enabled Flag is shown in the following diagram.

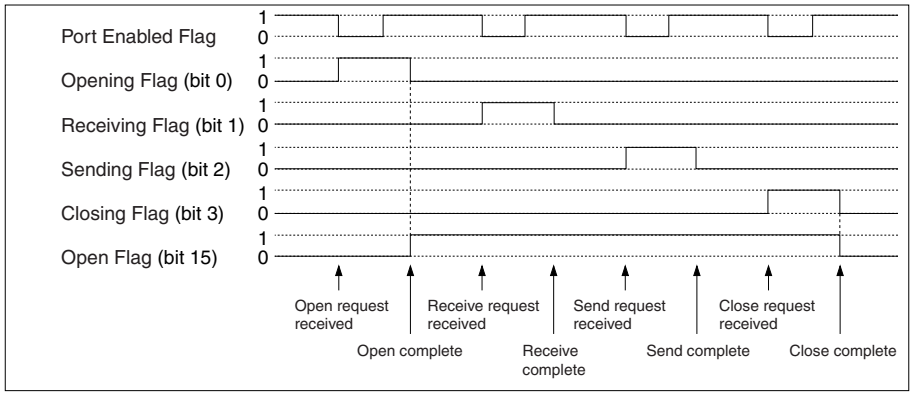

6-8-7 Socket Service Timing Chart

The timing of the socket service open, send, receive, and close request commands are shown in the following diagrams.

■ OPEN REQUEST

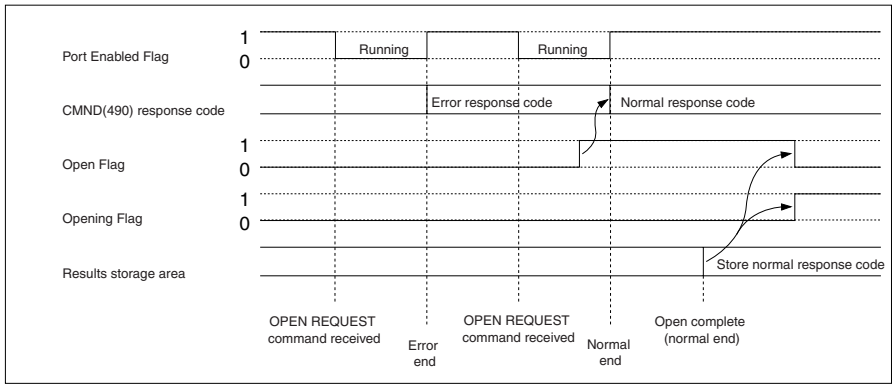

■ CLOSE REQUEST

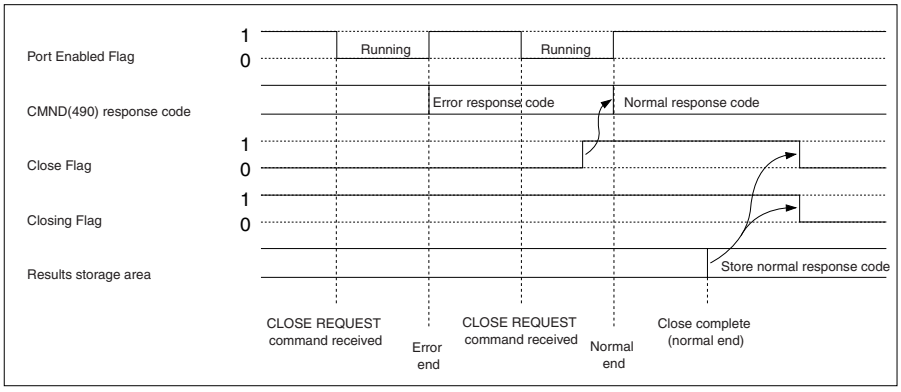

■ SEND REQUEST

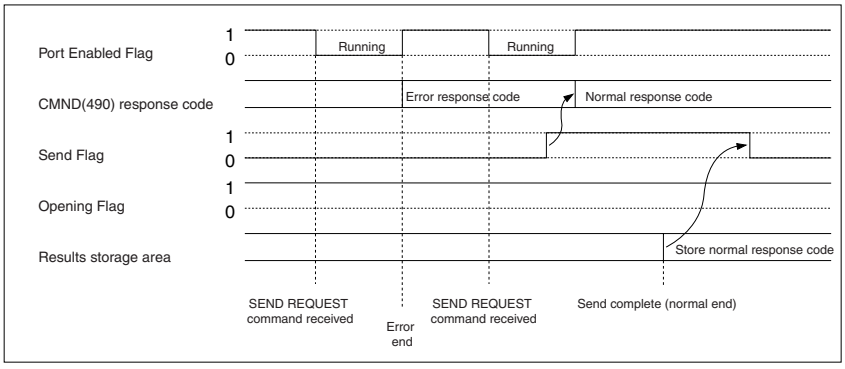

■ RECEIVE REQUEST

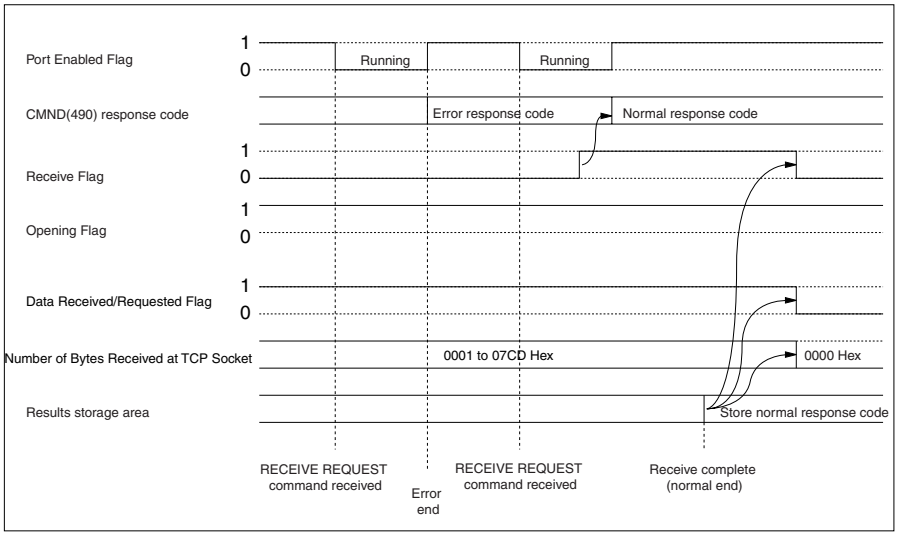

■ **CLOSE REQUEST during RECEIVE REQUEST**

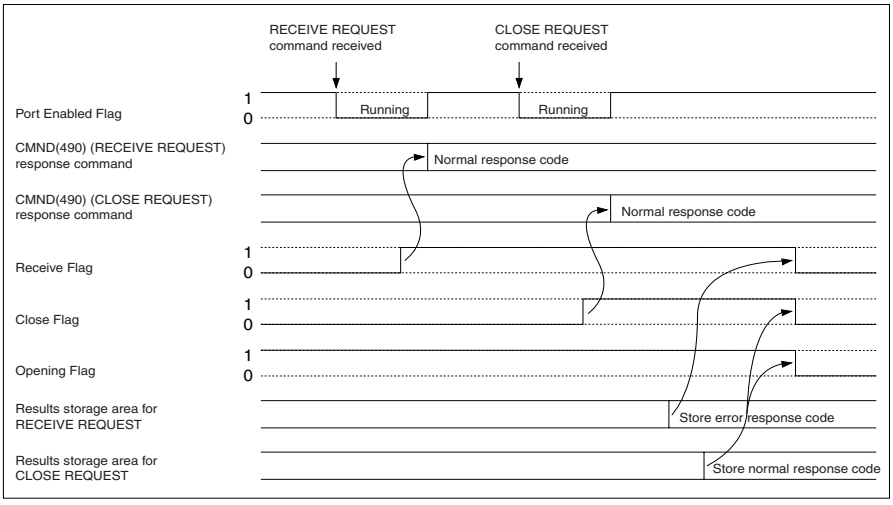

Note The timing shown in the above diagram occurs if a CLOSE REQUEST command is executed during SEND REQUEST command execution. The timing shown in the diagram also applies if a CLOSE REQUEST command is executed during OPEN REQUEST command execution, with the exception of the status of the Opening Flag.

6-8-8 TCP/IP Communications Programming Example

The following programming example illustrates transferring 100 bytes of data between an Ethernet Unit and a host computer using TCP/IP communications.

System Configuration

The system configuration for the program example and the Ethernet Unit system setup are shown below. To establish a TCP connection, the Ethernet Unit is passively opened and the host computer actively opened.

IP address:	196.36.32.55	IP address:	196.36.32.101
Port number:	4096	Port number:	4096
		FINS network address:	01 Hex
		Node address:	01 Hex
		Unit number:	10 Hex

Data Flow

The data will flow between the CPU Unit, Ethernet Unit, and host computer as shown in the following diagram.

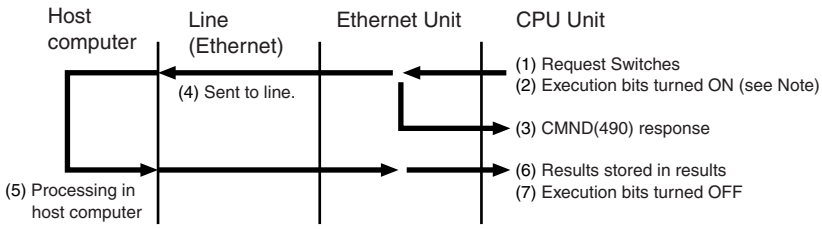

Note Here, “execution bits” refer to CIO 0000.00 to CIO 0000.03, which are used in the ladder diagram to control execution of communications and are not system flags, such as the Port Enabled Flags (A202.00 to A202.07).

Basic Operations

- CIO 0000.00 is turned ON to request opening a passive TCP socket from the Ethernet Unit.
- CIO 0000.01 is turned ON to request closing the TCP socket from the Ethernet Unit.
- CIO 0000.02 is turned ON to request sending data from the Ethernet Unit. Data (100 bytes) is sent beginning at D02005.
- CIO 0000.03 is turned ON to request receiving data from the Ethernet Unit. The data that is received (100 bytes) is stored beginning at D04022.
- One of the bits between CIO 0001.00 and CIO 0001.03 will turn ON if an error occurs. Refer to *6-7-5 Socket Service Request Switches* for information on errors. The following areas can be used to access details about errors:

  CMND(490) response codes
  Response codes in results storage area
  Network Communications Error Flags (A219.00 to A219.07)
  Completion codes (A203 to A210)

Program Memory Maps

The send and receive data and bits (flags) used by the program are shown in the following diagrams. The following example shows how the memory maps are structured.

Legend

Describes the meaning of the data.

	0	1	2	
D0000	CMND(490) control data			
	0012H	0004H	0001H	00

Indicates the contents of D00001 is 0004 Hex.
Indicates the contents of D00000 is 0012 Hex.

	15 to 8	7	6	5	4	3	2	1	0
CIO 0000								TCP Close Bit	TCP Open Bit

Indicates that CIO 0000.01 is used as the TCP Close Bit.
Indicates that CIO 0000.00 is used as the TCP Open Bit.

DM Area

	0	1	2	3	4	5	6	7	8	9
D00000	CMND(490) control data for TCP PASSIVE OPEN REQUEST									
	0012H	0004H	0001H	0110H	0000H	0032H	——	——	——	——

Response monitor time: 5 s
Port number: Port #0
Remote Ethernet Unit designation
Network address: 01_{hex}
Node address: 01_{hex}
Unit address: 10_{hex}
Number bytes to receive: 4 bytes
Number of TCP PASSIVE OPEN REQUEST command data bytes: 18 (0012_{hex}) bytes

	0	1	2	3	4	5	6	7	8	9
D00010	CMND(490) control data for TCP CLOSE REQUEST									
	0008H	0004H	0001H	0110H	0000H	0032H	——	——	——	——

Number bytes to receive: 4 bytes
Number of TCP CLOSE REQUEST command data bytes: 8 bytes

	0	1	2	3	4	5	6	7	8	9
D00020	CMND(490) control data for TCP SEND REQUEST									
	006EH	0004H	0001H	0110H	0000H	0032H	——	——	——	——

Number bytes to receive: 4 bytes
Number of TCP SEND REQUEST command data bytes: 110 ($006E_{hex}$) bytes

Command format = 10 bytes + 100 bytes send data

	0	1	2	3	4	5	6	7	8	9
D00030	CMND(490) control data for TCP RECEIVE REQUEST									
	000CH	0004H	0001H	0110H	0000H	0032H	—	—	—	—

Number bytes to receive: 4 bytes

Number of TCP RECEIVE REQUEST command data bytes: 12 bytes ($000C_{hex}$)

Number of bytes received specified in command data.

	0	1	2	3	4	5	6	7	8	9
D01000	TCP PASSIVE OPEN REQUEST command data									
	2710H	0001H	8203H	FC00H	1000H	0000H	C424H	2037H	0000H	—

Remote node: Not specified

Host computer IP address: 196.36.32.55 ($C4_{hex}.24_{hex}.20_{hex}.37_{hex}$)

Timeout value: Not set

Local port number: set to 4096 (1000_{hex})

Results storage area: set to D01020 ($03FC_{hex}$)
(Refer to page for details on the results storage area.)

TCP socket number (Ethernet Unit socket number): set to 1

Command code

	0	1	2	3	4	5	6	7	8	9
D01010	TCP PASSIVE OPEN REQUEST response									
	2710H	Response code	—	—	—	—	—	—	—	—

Stores the response after command execution.

	0	1	2	3	4	5	6	7	8	9
D01020	TCP PASSIVE OPEN REQUEST results storage area									
	Response code	Remote IP address		Remote TCP port No.	—	—	—	—	—	—

	0	1	2	3	4	5	6	7	8	9
D1030	TCP CLOSE REQUEST command data									
	2714H	0001H	8204H	1A00H	—	—	—	—	—	—

Results storage area: set to D01050 ($041A_{hex}$)

TCP socket number to close: set to 1 (0001_{hex})

Command code

	0	1	2	3	4	5	6	7	8	9
D01040	TCP CLOSE REQUEST response									
	2714H	Response code			___	___	___	___	___	___
D01050	TCP CLOSE REQUEST results storage area									
	Response code	___	___	___	___	___	___	___	___	___

	0	1	2	3	4	5	6	7	8	9
D02000	TCP SEND REQUEST command data									
	2713H	0001H	820BH	C200H	0064H	Send data: 100 bytes (0064_{hex})				

No. of send bytes: 100 bytes (0064_{hex})
Results storage area: set to D03010 ($0BC2_{hex}$)
TCP socket number
Command code

	0	1	2	3	4	5	6	7	8	9
D03000	TCP SEND REQUEST response									
	2713H	Response code	___	___	___	___	___	___	___	___
D03010	TCP SEND REQUEST results storage area									
	Response code	No. of bytes sent	___	___	___	___	___	___	___	___

	0	1	2	3	4	5	6	7	8	9
D04000	TCP RECEIVE REQUEST command data									
	2712H	0001H	820FH	B400H	0064H	0000H	___	___	___	___

Timeout value: Not set
No. of bytes to receive: 100 bytes (0064_{hex})
Results storage area: Set to D04020 ($0FB4_{hex}$)
TCP socket number
Command code

	0	1	2	3	4	5	6	7	8	9
D04010	TCP RECEIVE REQUEST response									
	2712H	Response code	___	___	___	___	___	___	___	___
D04020	TCP RECEIVE REQUEST results storage area									
	Response code	No. of bytes received	Receive data: 100 bytes (0064_{hex})							

CIO Area

	15 to 8	7	6	5	4	3	2	1	0
CIO 0000						TCP Receive Bit	TCP Send Bit	TCP Close Bit	TCP Open Bit
CIO 0001						TCP Receive Error Flag	TCP Send Error Flag	TCP Close Error Flag	TCP Open Error Flag
CIO 0002						TCP Receiving Flag	TCP Sending Flag	TCP Closing Flag	TCP Opening Flag

Programming Example

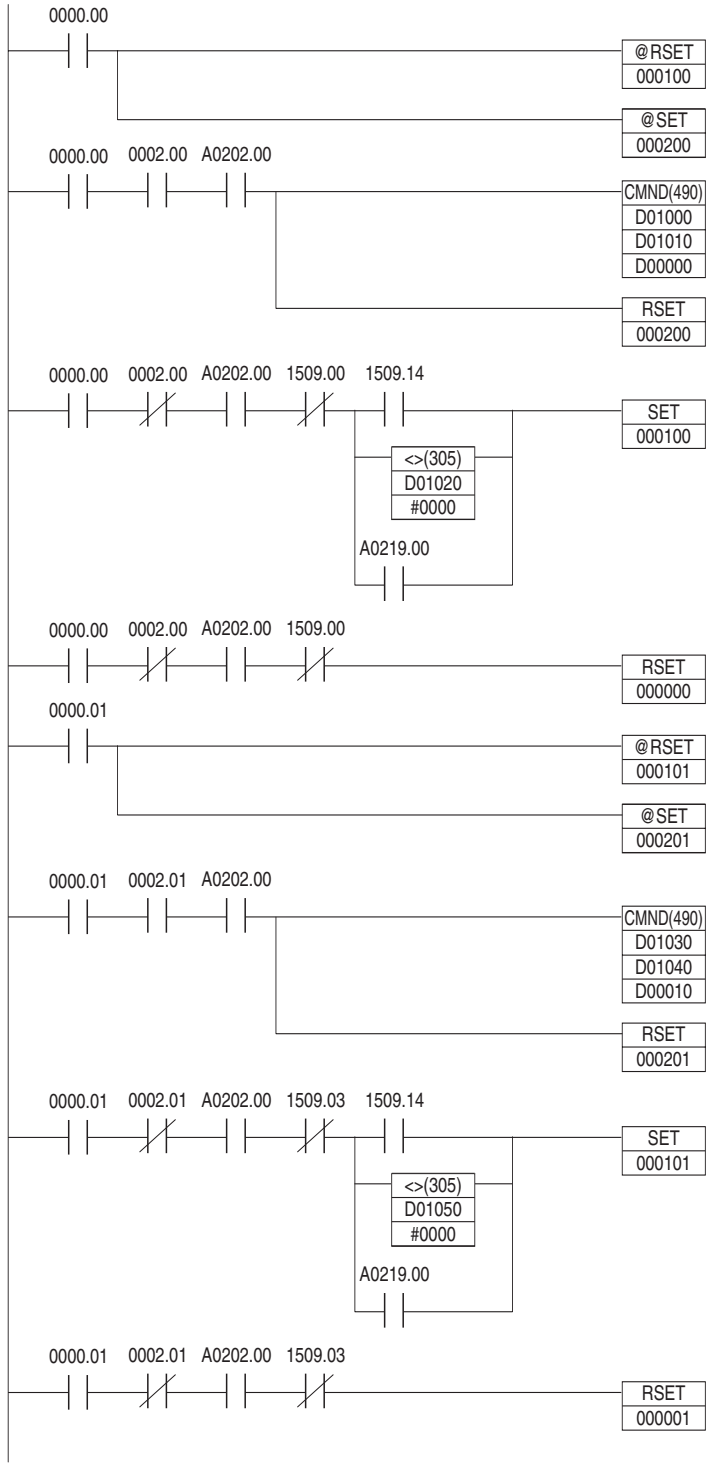

Continued on next page.

TCP Passive Open

When the TCP Open Bit (CIO 0000.00) turns ON, the TCP Open Error Flag (CIO 0001.00) is turned OFF and the TCP Opening Flag (CIO 0002.00) is turned ON to initialize processing.

When the TCP Opening Flag (CIO 0002.00) turns ON, the status of the Port Enabled Flag (A202.00) is checked to be sure it is ON and a PASSIVE TCP OPEN REQUEST command is sent using CMND(490).
D01000: First command word
D01010: First response word
D00000: First control data word

The TCP Opening Flag (CIO 0002.00) is also turned OFF.

If the Port Enabled Flag (A202.00) turns ON and the Opening Flag (CIO 1509.00) turns OFF while the TCP Opening Flag (CIO 0002.00) is OFF, checks are made and if any of the following are true, the TCP Open Error Flag (CIO 0001.00) is turned ON.

The Results Storage Error Flag (CIO 1509.14) is ON.

The contents of the Response Storage Area set in the command code (D01020) is not 0000 Hex (normal end).

The Network Communications Error Flag (A219.00) is ON.

After the execution results have been checked, the TCP Open Bit (CIO 0000.00) is turned OFF.

TCP Close

When the TCP Close Bit (CIO 0000.01) turns ON, the TCP Close Error Flag (CIO 0001.01) is turned OFF and the TCP Closing Flag (CIO 0002.01) is turned ON to initialize processing.

When the TCP Closing Flag (CIO 0002.01) turns ON, the status of the Port Enabled Flag (A202.00) is checked to be sure it is ON and a TCP CLOSE REQUEST command is sent using CMND(490).
D01030: First command word
D01040: First response word
D00010: First control data word

The TCP Closing Flag (CIO 0002.01) is also turned OFF.

If the Port Enabled Flag (A202.00) turns ON and the Closing Flag (CIO 1509.03) turns OFF while the TCP Closing Flag (CIO 0002.01) is OFF, checks are made and if any of the following are true, the TCP Close Error Flag (CIO 0001.01) is turned ON.

The Results Storage Error Flag (CIO 1509.14) is ON.

The contents of the Response Storage Area set in the command code (D01050) is not 0000 Hex (normal end).

The Network Communications Error Flag (A219.00) is ON.

After the execution results have been checked, the TCP Close Bit (CIO 0000.01) is turned OFF.

Continued from previous page.

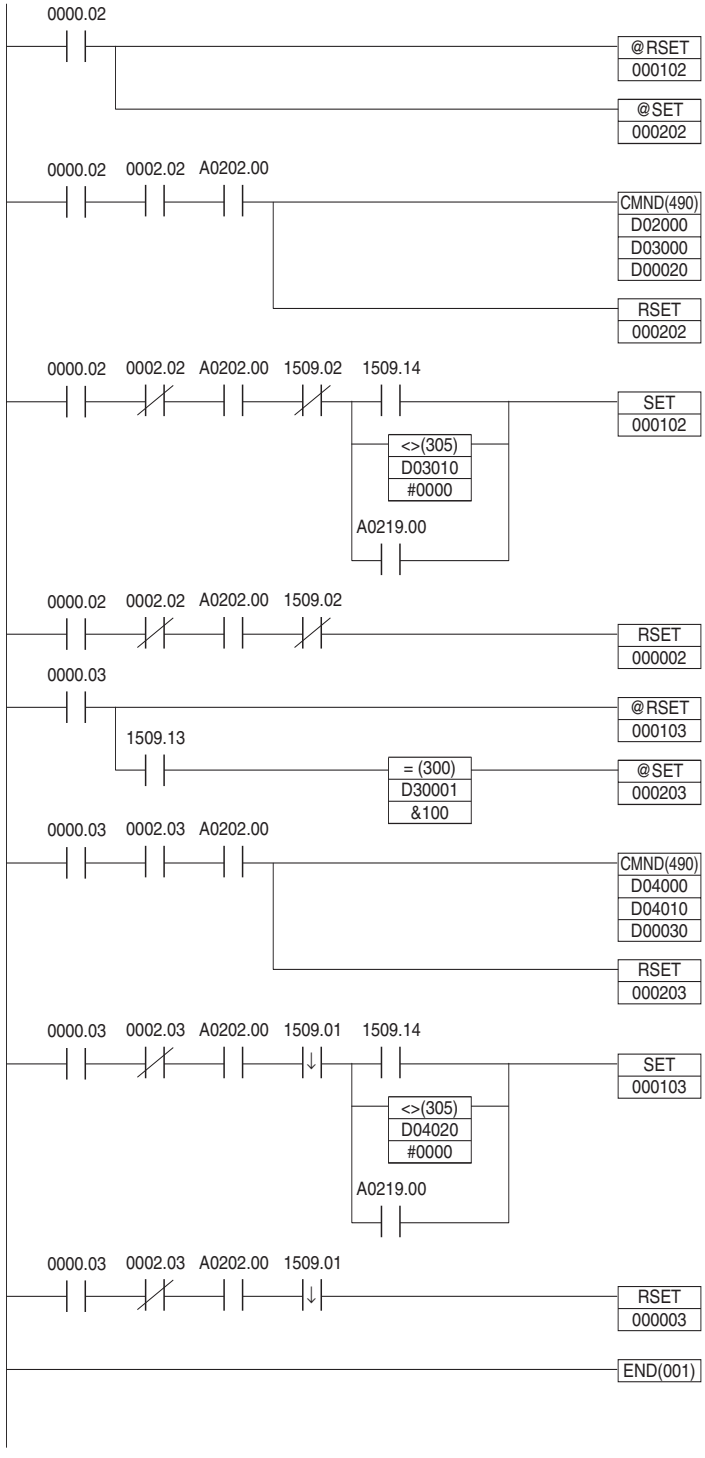

TCP Send

When the TCP Send Bit (CIO 0000.02) turns ON, the TCP Send Error Flag (CIO 0001.02) is turned OFF and the TCP Sending Flag (CIO 0002.02) is turned ON to initialize processing.

When the TCP Sending Flag (CIO 0002.02) turns ON, the status of the Port Enabled Flag (A202.00) is checked to be sure it is ON and a TCP SEND REQUEST command is sent using CMND(490).
D02000: First command word
D03000: First response word
D00020: First control data word

The TCP Sending Flag (CIO 0002.02) is also turned OFF.

If the Port Enabled Flag (A202.00) turns ON and the Sending Flag (CIO 1509.02) turns OFF while the TCP Sending Flag (CIO 0002.02) is OFF, checks are made and if any of the following are true, the TCP Send Error Flag (CIO 0001.02) is turned ON.

The Results Storage Error Flag (CIO 1509.14) is ON.

The contents of the Response Storage Area set in the command code (D03010) is not 0000 Hex (normal end).

The Network Communications Error Flag (A219.00) is ON.

After the execution results have been checked, the TCP Send Bit (CIO 0000.02) is turned OFF.

TCP Receive

When the TCP Receive Bit (CIO 0000.03) turns ON, the TCP Receive Error Flag (CIO 0001.03) is turned OFF. The contents of the reception buffer, and the status of the TCP Data Received/Requested Flag (CIO 1509.13), and the Number of Bytes Received at TCP Socket (D30001) are checked. If the data is stored in the buffer, the TCP Receiving Flag (CIO 0002.03) turns ON.

When the TCP Receiving Flag (CIO 0002.03) turns ON, the status of the Port Enabled Flag (A202.00) is checked to be sure it is ON and a TCP RECEIVE REQUEST command is sent using CMND(490).
D04000: First command word
D04010: First response word
D00030: First control data word

The TCP Receiving Flag (CIO 0002.03) is also turned OFF.

If the Port Enabled Flag (A202.00) turns ON and the Receiving Flag (CIO 1509.01) turns OFF while the TCP Receiving Flag (CIO 0002.03) is OFF, checks are made and if any of the following are true, the TCP Receive Error Flag (CIO 0001.03) is turned ON.

The Results Storage Error Flag (CIO 1509.14) is ON.

The contents of the Response Storage Area set in the command code (D04020) is not 0000 Hex (normal end).

The Network Communications Error Flag (A219.00) is ON.

After the execution results have been checked, the TCP Receive Bit (CIO 0000.03) is turned OFF.

Note When using the above programming example, change the bit and word addresses as necessary to avoid using the same areas used by other parts of the user program or the CPU Bus Unit.

6-8-9 UDP/IP Communications Programming Example

The following programming example illustrates transferring 100 bytes of data between an Ethernet Unit and a host computer using UDP/IP communications.

For the UDP connection, the Ethernet Unit uses a PASSIVE OPEN and the host computer uses an ACTIVE OPEN.

System Configuration

The system configuration for the program example and the Ethernet Unit system setup are shown below.

IP address:	196.36.32.55	IP address:	196.36.32.101
Port number:	4096	Port number:	4096
		FINS network address:	01 Hex
		Node address:	01 Hex
		Unit number:	10 Hex

Basic Operations

- CIO 0000.00 is turned ON to request opening a UDP socket from the Ethernet Unit.
- CIO 0000.01 is turned ON to request closing the UDP socket from the Ethernet Unit.
- CIO 0000.02 is turned ON to request sending data from the Ethernet Unit. Data (100 bytes) is sent beginning at D02008.
- CIO 0000.03 is turned ON to request receiving data from the Ethernet Unit. The data that is received (100 bytes) is stored beginning at D04025.
- One of the bits between CIO 0001.00 and CIO 0001.03 will turn ON if an error occurs. Refer to *6-7-5 Socket Service Request Switches* for information on errors. The following areas can be used to access details about errors:

  CMND(490) response codes
  Response codes in results storage area
  Network Communications Error Flags (A219.00 to A219.07)
  Completion codes (A203 to A210)

Program Memory Maps

The send and receive data and bits (flags) used by the program are shown in the following diagrams.

DM Area

	0	1	2	3	4	5	6	7	8	9
D00000	CMND(490) control data for UDP OPEN REQUEST									
	000AH	0004H	0001H	0110H	0000H	0032H	—	—	—	—

Response monitor time: 5 s
FINS communications port: Port #0
Remote Ethernet Unit designation
Network address: 01_{hex}
Node address: 01_{hex}
Unit address: 10_{hex}
Number bytes to receive: 4 bytes
Number of UDP OPEN REQUEST command data bytes: 10 bytes ($000A_{hex}$)

	0	1	2	3	4	5	6	7	8	9
D00010	CMND(490) control data for UDP CLOSE REQUEST									
	0008H	0004H	0001H	0110H	0000H	0032H	—	—	—	—

Number of bytes to receive: 4 bytes
Number of UDP CLOSE REQUEST command data bytes: 8 bytes

	0	1	2	3	4	5	6	7	8	9
D00020	CMND(490) control data for UDP SEND REQUEST									
	0074H	0004H	0001H	0110H	0000H	0032H	—	—	—	—

Number bytes to receive: 4 bytes
Number of UDP SEND REQUEST command data bytes: 116 (0074_{hex}) bytes
Command format = 16 bytes + 100 bytes send data

	0	1	2	3	4	5	6	7	8	9
D00030	CMND(490) control data for UDP RECEIVE REQUEST									
	000CH	0004H	0001H	0110H	0000H	0032H	—	—	—	—

Number bytes to receive: 4 bytes
Number of UDP RECEIVE REQUEST command data bytes: 12 bytes ($000C_{hex}$)
Number of bytes received is specified in command data.

	0	1	2	3	4	5	6	7	8	9
D01000	UDP OPEN REQUEST command data									
	2701H	0001H	8203H	FC00H	1000H	—	—	—	—	—

Local port number: set to 4096 (1000_{hex})
Results storage area: set to D01020 ($03FC_{hex}$)
UDP socket number (Ethernet Unit socket number): set to 1
Command code

	0	1	2	3	4	5	6	7	8	9
D01010	UDP OPEN response									
	2701H	Response code	—	—	—	—	—	—	—	—

Stores the response after command execution.

	0	1	2	3	4	5	6	7	8	9
D01020	UDP OPEN REQUEST results storage area									
	Response code	—	—	—	—	—	—	—	—	—

	0	1	2	3	4	5	6	7	8	9
D01030	UDP CLOSE REQUEST command data									
	2704H	0001H	8204H	1A00H	—	—	—	—	—	—

Results storage area: set to D01050 ($041A_{hex}$)

UDP socket number closed: set to 1 (0001_{hex})

Command code

	0	1	2	3	4	5	6	7	8	9
D01040	UDP CLOSE REQUEST response									
	2704H	Response code			—	—	—	—	—	—
D01050	UDP CLOSE REQUEST results storage area									
	Response code	—	—	—	—	—	—	—	—	—

	0	1	2	3	4	5	6	7	8	9
D02000	UDP SEND REQUEST command data									
	2703H	0001H	820BH	C200H	C424H	2037H	1000H	0064H	—	—

No. of send bytes: 100 bytes (0064_{hex})

Remote port: Port #4096 (1000_{hex})

Remote address: 196.36.32.55 ($C4_{hex}.24_{hex}.20_{hex}.37_{hex}$)

Results storage area: Set to D03010 ($0BC2_{hex}$)

UDP socket number

Command code

	0	1	2	3	4	5	6	7	8	9
D03000	UDP SEND REQUEST response									
	2703H	Re-sponse code	—	—	—	—	—	—	—	—
D03010	UDP SEND REQUEST results storage area									
	Re-sponse code	No. of send bytes	—							

	0	1	2	3	4	5	6	7	8	9
D04000	UDP RECEIVE REQUEST command data									
	2702H	0001H	820FH	B400H	0064H	0000H	—	—	—	—

Timeout value: Not set

No. of bytes to receive: 100 bytes (0064_{hex})

Results storage area: set to D04020 ($0FB4_{hex}$)

UDP socket number used

Command code

	0	1	2	3	4	5	6	7	8	9
D04010	UDP RECEIVE REQUEST response									
	2702H	Re-sponse code	—	—	—	—	—	—	—	—
D04020	UDP RECEIVE REQUEST results storage area									
	Re-sponse code	Source IP address		Source port number	No. of bytes to receive	Receive data: 100 bytes (0064_{hex})				

CIO Area

	15 to 8		7	6	5	4	3	2	1	0
CIO 0000							UDP Receive Bit	UDP Send Bit	UDP Close Bit	UDP Open Bit
CIO 0001							UDP Receive Error Flag	UDP Send Error Flag	UDP Close Error Flag	UDP Open Error Flag
CIO 0002							UDP Receiving Flag	UDP Sending Flag	UDP Closing Flag	UDP Opening Flag

Programming Example

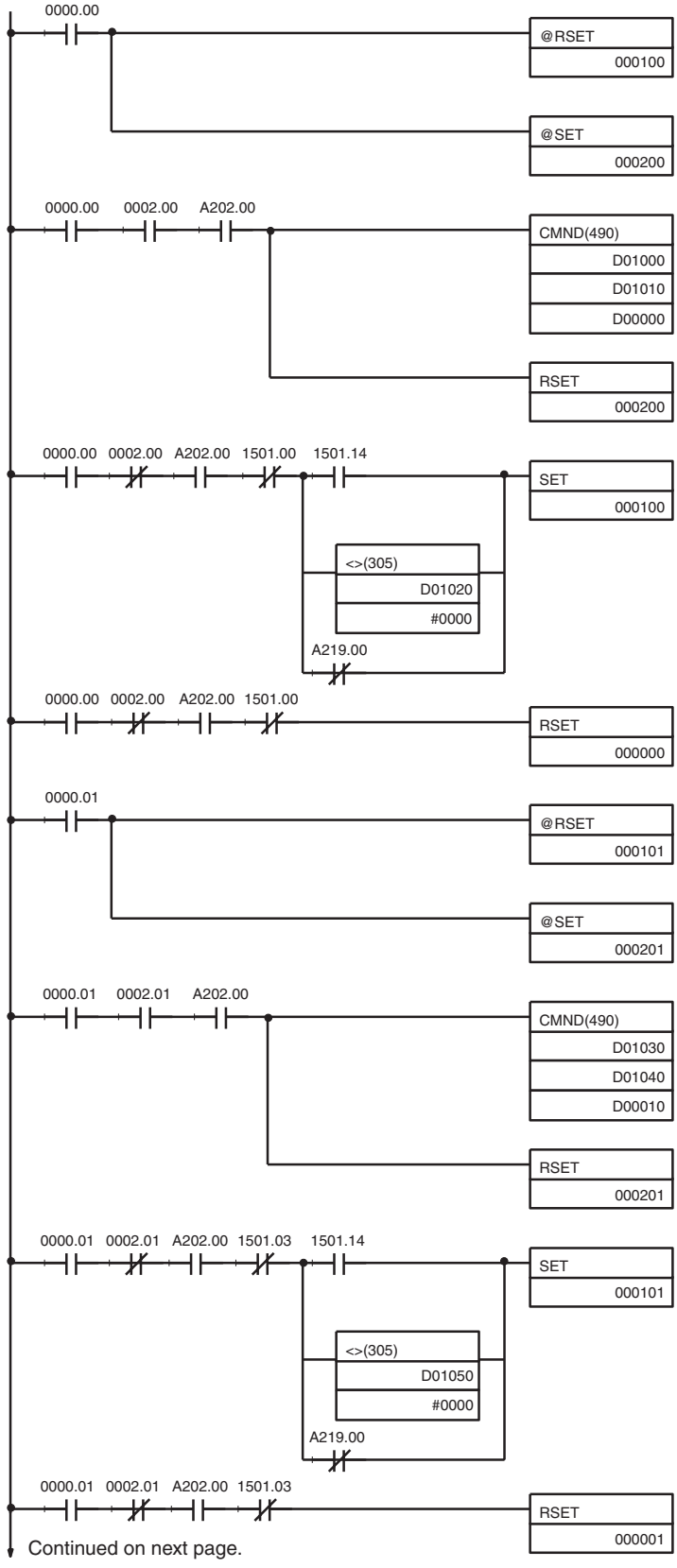

UDP Passive Open
When the UDP Open Bit (CIO 0000.00) turns ON, the UDP Open Error Flag (CIO 0001.00) is turned OFF and the UDP Opening Flag (CIO 0002.00) is turned ON to initialize processing.

When the UDP Opening Flag (CIO 0002.00) turns ON, the status of the Port Enabled Flag (A202.00) is checked to be sure it is ON and a UDP OPEN REQUEST command is sent using CMND(490).
D01000: First command word
D01010: First response word
D00000: First control data word

The UDP Opening Flag (CIO 0002.00) is also turned OFF.

If the Port Enabled Flag (A202.00) turns ON and the Opening Flag (CIO 1501.00) turns OFF while the UDP Opening Flag (CIO 0002.00) is OFF, checks are made and if any of the following are true, the UDP Open Error Flag (CIO 0001.00) is turned ON.

The Results Storage Error Flag (CIO 1501.14) is ON.

The contents of the Response Storage Area set in the command code (D01020) is not 0000 Hex (normal end).

The Network Communications Error Flag (A219.00) is ON.

After the execution results have been checked, the UDP Open Bit (CIO 0000.00) is turned OFF.

UDP Close
When the UDP Close Bit (CIO 0000.01) turns ON, the UDP Close Error Flag (CIO 0001.01) is turned OFF and the UDP Closing Flag (CIO 0002.01) is turned ON to initialize processing.

When the UDP Closing Flag (CIO 0002.01) turns ON, the status of the Port Enabled Flag (A202.00) is checked to be sure it is ON and a UDP CLOSE REQUEST command is sent using CMND(490).
D01030: First command word
D01040: First response word
D00010: First control data word

The UDP Closing Flag (CIO 0002.01) is also turned OFF.

If the Port Enabled Flag (A202.00) turns ON and the Closing Flag (CIO 1501.03) turns OFF while the UDP Closing Flag (CIO 0002.01) is OFF, checks are made and if any of the following are true, the UDP Close Error Flag (CIO 0001.01) is turned ON.

The Results Storage Error Flag (CIO 1501.14) is ON.

The contents of the Response Storage Area set in the command code (D01050) is not 0000 Hex (normal end).

The Network Communications Error Flag (A219.00) is ON.

After the execution results have been checked, the UDP Close Bit (CIO 0000.01) is turned OFF.

Continued on next page.

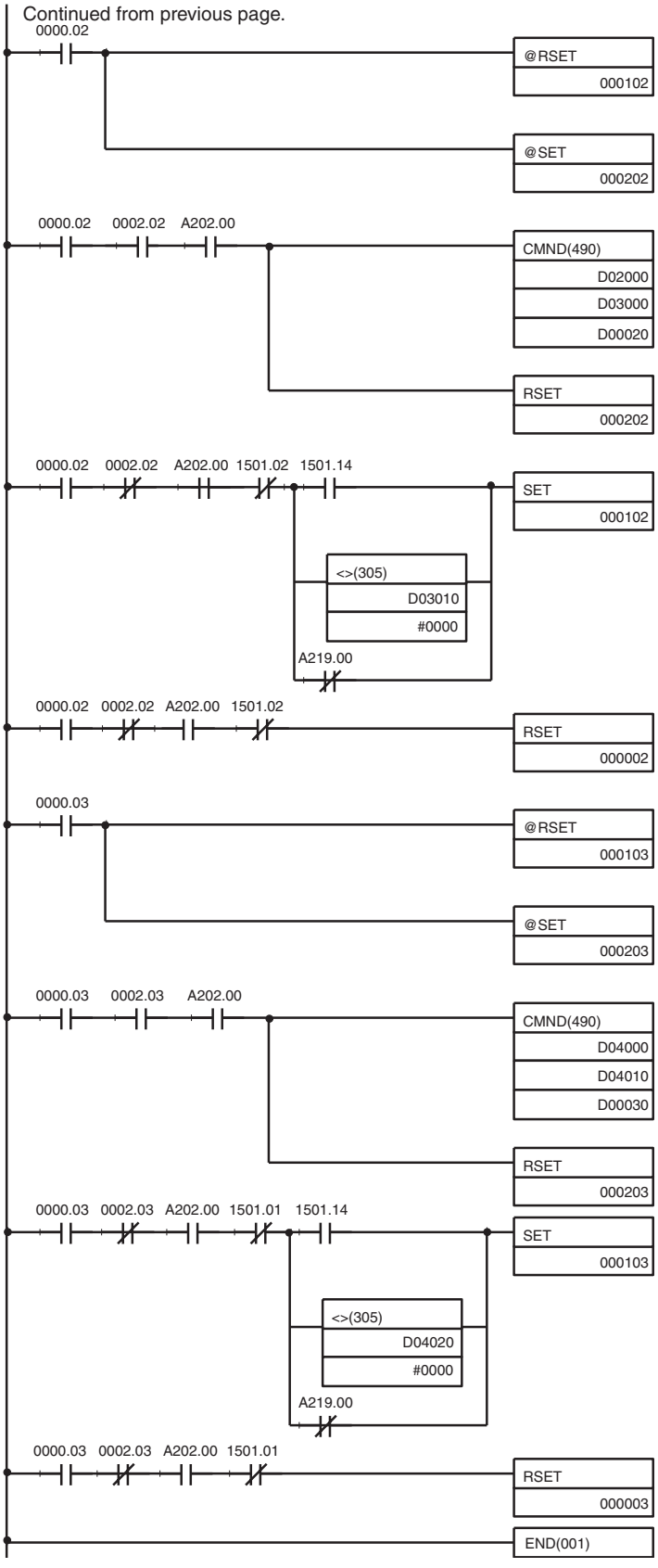

UDP Send
When the UDP Send Bit (CIO 0000.02) turns ON, the UDP Send Error Flag (CIO 0001.02) is turned OFF and the UDP Sending Flag (CIO 0002.02) is turned ON to initialize processing.

When the UDP Sending Flag (CIO 0002.02) turns ON, the status of the Port Enabled Flag (A202.00) is checked to be sure it is ON and a UDP SEND REQUEST command is sent using CMND(490).
D02000: First command word
D03000: First response word
D00020: First control data word

The UDP Sending Flag (CIO 0002.02) is also turned OFF.

If the Port Enabled Flag (A202.00) turns ON and the Sending Flag (CIO 1501.02) turns OFF while the UDP Sending Flag (CIO 0002.02) is OFF, checks are made and if any of the following are true, the UDP Send Error Flag (CIO 0001.02) is turned ON.

The Results Storage Error Flag (CIO 1501.14) is ON.

The contents of the Response Storage Area set in the command code (D03010) is not 0000 Hex (normal end).

The Network Communications Error Flag (A219.00) is ON.

After the execution results have been checked, the UDP Send Bit (CIO 0000.02) is turned OFF.

UDP Receive
When the UDP Receive Bit (CIO 0000.03) turns ON, the UDP Receive Error Flag (CIO 0001.03) is turned OFF and the UDP Receiving Flag (CIO 0002.03) is turned ON to initialize processing.

When the UDP Receiving Flag (CIO 0002.03) turns ON, the status of the Port Enabled Flag (A202.00) is checked to be sure it is ON and a UDP RECEIVE REQUEST command is sent using CMND(490).
D04000: First command word
D04010: First response word
D00030: First control data word

The UDP Receiving Flag (CIO 0002.03) is also turned OFF.

If the Port Enabled Flag (A202.00) turns ON and the Receiving Flag (CIO 1501.01) turns OFF while the UDP Receiving Flag (CIO 0002.03) is OFF, checks are made and if any of the following are true, the UDP Receive Error Flag (CIO 0001.03) is turned ON.

The Results Storage Error Flag (CIO 1501.14) is ON.

The contents of the Response Storage Area set in the command code (D04020) is not 0000 Hex (normal end).

The Network Communications Error Flag (A219.00) is ON.

After the execution results have been checked, the UDP Receive Bit (CIO 0000.03) is turned OFF.

Note When using the above programming example, change the bit and word addresses as necessary to avoid using the same areas used by other parts of the user program or the CPU Bus Unit.

6-9 Precautions in Using Socket Services

6-9-1 UDP and TCP Socket Services

- If a short response monitor time is specified in CMND(490) control data and the Ethernet Unit is operating under a high load, a result may be stored even if the response code indicates a time-out. If this occurs, increase the monitor time specified with CMND(490).
- The socket status area in the CIO Area is zeroed when the PLC's operating mode is changed (e.g., from PROGRAM to RUN). The actual Ethernet Unit socket status, however, will remain unchanged after the socket status area is zeroed. To avoid this problem, use the IOM Hold setting in the PLC Setup. Refer to the PLC's operation manuals for details on settings.
- The Results Storage Error Flag will turn ON in the socket status to indicate that the specified Results Storage Area does not exist in the PLC. Correct the user program.
- Communications time may increase if multiple Ethernet Unit functions are used simultaneously or due to the contents of the user program.
- Communications efficiency may decrease due to high communications loads on the network.
- All data is flushed from the socket's communications buffer when a socket is closed with the CLOSE REQUEST command. In some cases, the transmit data for the SEND REQUEST command issued just before the socket was closed may not be sent.
- When sockets are open, the Ethernet Unit provides a 4,096-byte buffer for each TCP socket and 9,016-byte buffer for each UDP socket to allow data to be received at any time. These buffers are shared by all open sockets. Receive data will be discarded for a socket if the buffer becomes full. The user application must therefore issue RECEIVE REQUEST commands frequently enough to prevent the internal buffers from becoming full.

6-9-2 UDP Socket Service

- The UDP socket sets a broadcast address for the remote node address to broadcast data to all nodes of the network simultaneously. The maximum length of broadcast data is 1,472 bytes. Data in multiple fragments (over 1,473 bytes for a UDP socket) cannot be broadcast.
- The UDP socket does not check the transmitted data to ensure communications reliability. To increase communication reliability, communications checks and retries must be included in the user application program.

6-9-3 TCP Socket Service

- If the TCP socket of the remote node closes (the connection is broken) during communications, the TCP socket at the local node must also be closed. The communications Results Storage Area can be used to check if the connection has been broken. Close the local socket immediately after detecting that the remote TCP socket has closed. The following situations indicate that the remote socket has closed.

  TCP Receive Results Storage Area:
  Response code = 004B (error at remote node)

  TCP Send Results Storage Area:
  Response code = 0020 (connection broken with remote socket during transmission)

- Data can remain in a buffer at the local node if the remote TCP socket closes during communications. Any data remaining in the buffer will be discarded when the TCP socket is closed. To avoid problems of this nature, steps will have to be taken in the application program, such as sending data to enable closing, and then only closing once reception of this data has been confirmed.
- When closing a connection for a TCP socket, the first port to be closed cannot be reopened for at least 60 seconds after the other port closes. However, this restriction does not apply for a port opened using the TCP ACTIVE OPEN REQUEST command with a local TCP port number of 0 (port number automatically assigned) which is closed from the side that actively opened the socket.
- A connection is established for a passively opened socket by actively opening it from another socket. A connection will not be established by a different socket attempting to actively open the socket that is already actively opening a socket. Similarly, a connection will not be established if a different socket attempts to passively open a socket that is already being passively opened by another socket. You cannot actively open multiple connections to a socket passively opened at the Ethernet Unit.
- The Ethernet Unit TCP sockets have no KEEP ALIVE function to check that the connection is normal if communications do not occur for a set time period through a communications line for which a connection has been established. The Ethernet Unit's TCP sockets make no checks to the socket at the other node. Checks made by the remote node, however, are received as responses, so that it is not necessary for the user program to consider the KEEP ALIVE function.

6-9-4 Precautions in Using Socket Service Request Switches

- Send and reception processing can not be performed at the same time when Socket Service Request Switches are used for socket services because there is only one Socket Service Parameter Area for each socket. For example, if the Send Request Switch is turned ON when data is being received, the response code will be 110C hexadecimal, indicating that a Request Switch was turned ON during communications processing. (The response code for the reception will overwrite this code when processing has been completed.)
- If more than one Request Switch is turned ON simultaneously, the response code will be 110C hexadecimal and all requested processing will end in an error.
- Close processing can be performed, however, even during open, send, or receive processing. This enables emergency close processing. Also, the only parameter required for close processing is the socket number, so a socket can be closed even when parameters are set for another process.

6-9-5 Times Required for Sending and Receiving for Socket Services

The transmission delays for socket service is calculated as the sum of the communications processing times for both nodes.

Transmission delay = Remote node send processing time + Local node receive processing time + Local node send processing time + Remote node receive processing time

Calculate the maximum Ethernet Unit transmission delays for sending and receiving using the following formulas. These times are the same for both UDP and TCP.

The delays found using the following formulas, however, are approximate values when one socket service is used. If multiple socket services are used, the delays will increase depending on the operating conditions. Also, the transmission delay on the network relative to the processing time is so small that it can be ignored, and so it is omitted.

■ **Requesting UDP Socket Services by Manipulating Dedicated Control Bits**

High-speed Socket Services Enabled and CPU Unit Cycle Time of Less Than 1.5 ms

Transmission processing time = reception processing time =
CPU Unit cycle time × 1 + number of send/receive bytes × 0.0005 + 5.0 (ms)

High-speed Socket Services Enabled and CPU Unit Cycle Time of 1.5 ms or Greater

Transmission processing time = reception processing time =
CPU Unit cycle time × 6 (ms)

High-speed Socket Services Disabled

Transmission processing time = reception processing time =
CPU Unit cycle time × 7 + 40.0 (ms)

■ **Requesting TCP Socket Services by Manipulating Dedicated Control Bits**

High-speed Socket Services Enabled and CPU Unit Cycle Time of Less Than 1.5 ms

Transmission processing time = reception processing time =
CPU Unit cycle time × 1 + number of send/receive bytes × 0.0005 + 6.5 (ms)

High-speed Socket Services Enabled and CPU Unit Cycle Time of 1.5 ms or Greater

Transmission processing time = reception processing time =
CPU Unit cycle time × 6 (ms)

High-speed Socket Services Disabled

Transmission processing time = reception processing time =
CPU Unit cycle time × 7 + 40.0 (ms)

■ **Requesting UDP Socket Services by Executing CMND(490)**

CPU Unit Cycle Time Less Than 5 ms

Transmission processing time = reception processing time =
CPU Unit cycle time × 6 + 65.0 (ms)

CPU Unit Cycle Time between 5 ms Inclusive and 10 ms Exclusive

Transmission processing time = reception processing time = 120.0 (ms)

CPU Unit Cycle Time of 10 ms or Greater

Transmission processing time = reception processing time =
CPU Unit cycle time × 4 (ms)

■ **TCP Socket Services Using CMND(490)**

CPU Unit Cycle Time Less Than 5 ms

Transmission processing time = reception processing time =
CPU Unit cycle time × 6 + 70.0 (ms)

CPU Unit Cycle Time between 5 ms Inclusive and 10 ms Exclusive

Transmission processing time = reception processing time = 120.0 (ms)

CPU Unit Cycle Time of 10 ms or Greater

Transmission processing time = reception processing time =
CPU Unit cycle time × 4 (ms)

Note

1. The values obtained from the above equations are guidelines for the transmission delay time when one socket in the Ethernet Unit is used only. The execution time required for the user program is not included.
2. The communications time for the remote nodes depends on the device being used. For remote nodes that are not Ethernet Units, calculate the communications time according to the device's operation manual.
3. The actual operating environment can cause transmission delays larger than those calculated with the methods given here. Among the causes of longer delays are the following: traffic on the network, window sizes at network nodes, traffic through the Ethernet Unit (e.g., simultaneous servicing of multiple sockets and socket service communications, etc.), and the system configuration.
4. The above values are guidelines when the default (4%) for the uniform peripheral servicing time in the PLC Setup is used.
5. By increasing the value of the uniform peripheral servicing time, the maximum transmission delay time for socket services can be shorter.
6. If the high-speed socket service option is selected and manipulating specific bits is used, the setting for the peripheral servicing time will not affect the time required for communications. This is because the send processing or receive processing, which previously depended on the peripheral servicing time, are not interrupted.
7. Processing cannot be faster than the send and receive processing performance of the Ethernet Unit if the send request is processed periodically using a ladder program timer or if receive request processing is performed for continuous data from a remote node. In particular, the data buffer on the receiving side may be exhausted. In such a case, adjust the send timing (i.e., send timing from remote node) or receive frequency so that the actual load is approximately 1.5 times slower than the processing performance.

Example: When using TCP socket services between two PLCs by manipulating specific bits (high-speed socket service enabled) to send/receive 512 bytes in both directions, the guideline for the maximum transmission delay time can be calculated according to the following conditions as shown in the table below.

CPU Unit cycle time (local node) = 1 ms

CPU Unit cycle time (remote node) = 4 ms

Item	Calculation
Reception processing time (local node)	1 × 1 + 512 × 0.0005 + 6.5 = 6.756 ms ≈ 6.8 ms
Transmission processing time (local node)	1 × 1 + 512 × 0.0005 + 6.5 = 6.756 ms ≈ 6.8 ms
Transmission processing time (remote node)	4 × 6 = 24.0 ms
Reception processing time (remote node)	4 × 6 = 24.0 ms
Maximum transmission delay	6.8 + 6.8 + 24.0 + 24.0 = 61.6 ms

SECTION 7
Using FINS Communications to Create Host Applications

This section provides information on communicating on Ethernet Systems and interconnected networks using FINS commands. The information provided in the section deals only with FINS communications in reference to Ethernet Units.

FINS commands issued from a PLC are sent via the SEND(090), RECV(098), and CMND(490) instructions programmed into the user ladder-diagram program. Refer to the *CS/CJ-series Programmable Controllers Instructions Reference Manual (W340)* for further details on programming these instructions.

7-1 Overview of FINS Communications 160
- 7-1-1 Communications On an Ethernet Network 160
- 7-1-2 Using the FINS/UDP and FINS/TCP Methods 161
- 7-1-3 FINS Communications Service Specifications for Ethernet 161

7-2 FINS Frames 162

7-3 FINS/UDP Method 163
- 7-3-1 Overview 163
- 7-3-2 Sending Commands from a Host Computer 166

7-4 FINS/TCP Method 171
- 7-4-1 Overview 171
- 7-4-2 FINS/TCP Mode Specifications 177
- 7-4-3 Sending Commands from a Host Computer 184

7-5 Maximum Transmission Delays: Writing/Reading to CPU Unit 192

7-1 Overview of FINS Communications

7-1-1 Communications On an Ethernet Network

Data is sent and received as UDP packets or UDP packets on an Ethernet network.

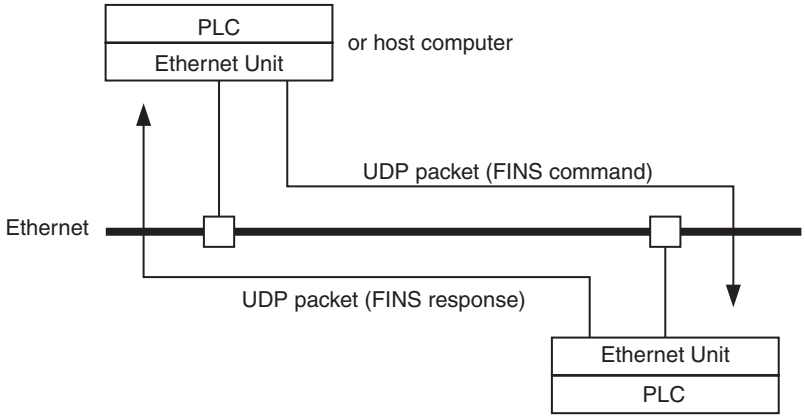

In the FINS communications service, both an IP address for IP (the Internet layer) and a FINS node address for FINS (the application layer) are used for the remote device. Also, 9600 is used as the default setting for the local UDP or TCP port number (i.e., the transport layer) for identifying the application layer, i.e., the FINS communications service. (Another number can be set for the FINS/UDP port from the Setup Tab in the Unit Setup.)

For details on pairing FINS node addresses with IP addresses and UDP/TCP port numbers, refer to the subsection *IP Addresses in FINS Communications* under *SECTION 5 Determining IP Addresses* in the *Operation Manual Construction of Networks*.

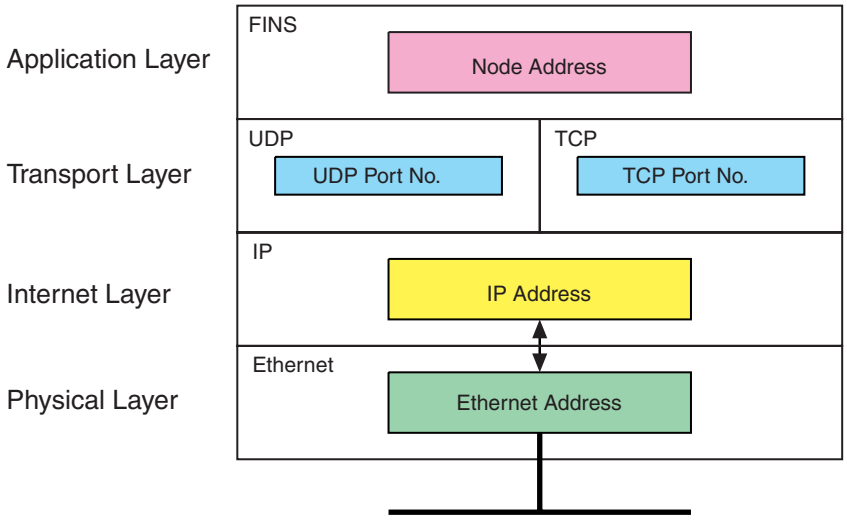

The FINS communications service is a communications method based on UDP/IP, and it is supported by most OMRON Ethernet-related products. (In this manual it is called the FINS/UDP method.) In addition to supporting the FINS/UDP method, the CS1W-ETN21 and CJ1W-ETN21 support FINS communications using TCP/IP. (In this manual, this is called the FINS/TCP method.)

7-1-2 Using the FINS/UDP and FINS/TCP Methods

It is recommended that FINS/UDP and FINS/TCP be used as follows:

- When remote devices do not support the FINS/TCP method:
  Use the FINS/UDP method for FINS communications with those devices.
- When FINS nodes are connected on the same Ethernet segment:
  Use the FINS/UDP method between those nodes.

  Note FINS/UDP offers a slight advantage in performance.
- When FINS nodes are connected over multiple IP network layers:
  Use the FINS/TCP method between those nodes.

  Note FINS/TCP offers superior communications quality.
- When the quality of connections is unreliable, as with wireless LAN:
  Use the FINS/TCP method between those nodes.

  Note FINS/TCP offers superior communications quality.

7-1-3 FINS Communications Service Specifications for Ethernet

Item	Specifications	
Number of nodes	254	
Message length	2,012 bytes max.	
Number of buffers	192	
Protocol name	FINS/UDP method	FINS/TCP method
Protocol used	UDP/IP	TCP/IP
	The selection of UDP/IP or TCP/IP is made by means of the FINS/TCP Tab in the CX-Programmer's Unit Setup.	
Number of connections	---	16
Port number	9600 (default) Can be changed.	9600 (default) Can be changed.
Protection	No	Yes (Specification of client IP addresses when Unit is used as a server)
Other	Items set for each UDP port • Broadcast • Address conversion method	Items set for each connection • Server/client specification • Remote IP address specification When client: Specify remote Ethernet Unit (server) IP address When server: Specify IP addresses of clients permitted to connect • Automatic FINS node address allocation: Specify automatic allocation of client FINS node addresses • Keep-alive Specify whether remote node keep-alive is to be used. TCP/IP Setting: • Remote node keep-alive time.
Internal table	This a table of correspondences for remote FINS node addresses, remote IP addresses, TCP/UDP, and remote port numbers. It is created automatically when power is turned ON to the PLC or when the Ethernet Unit is restarted, and it is automatically changed when a connection is established by means of the FINS/TCP method or when a FINS command received. The following functions are enabled by using this table. • IP address conversion using the FINS/UDP method • Automatic FINS node address conversion after a connection is established using the FINS/TCP method • Automatic client FINS node address allocation using the FINS/TCP method • Simultaneous connection of multiple FINS applications	

7-2 FINS Frames

The FINS communications service is carried out through the exchange of FINS command frames and their corresponding response frames. (There are also commands with no responses.)

Both command frames and response frames are comprised of a FINS header for storing transfer control information, a FINS command field for storing a command, and a FINS parameter/data field for storing command parameters and transmission/response data.

FINS command frames and FINS response frames are used with both FINS/UDP and FINS/TCP.

FINS Command Frame Format

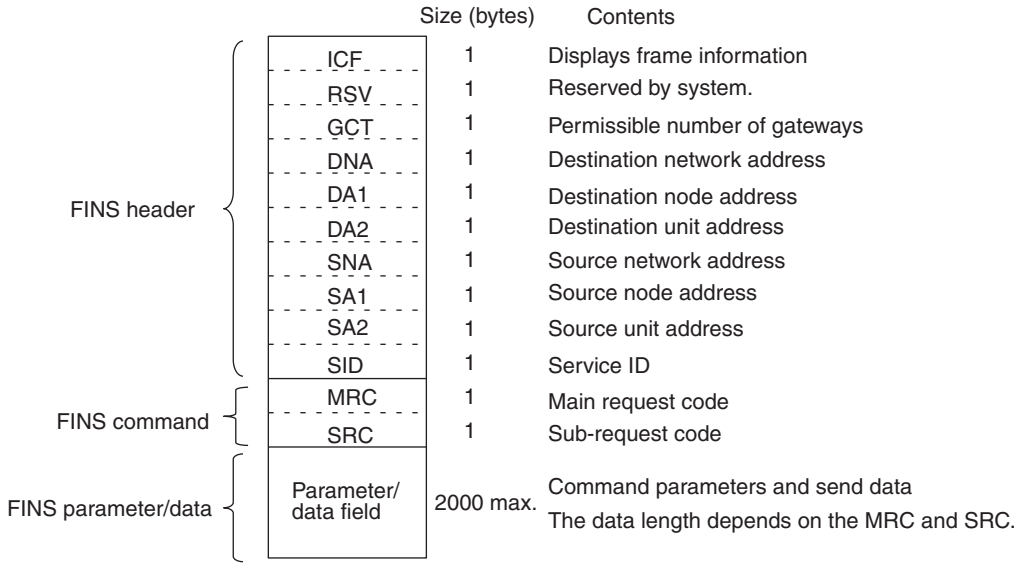

FINS Response Frame Format

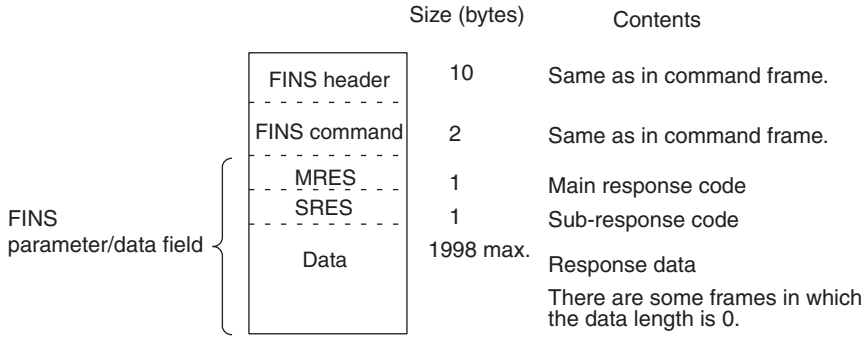

FINS Header Information

ICF (Information Control Field)

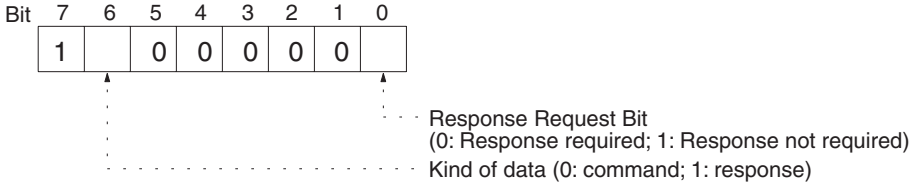

RSV (Reserved by System)

Set to 00 (Hex).

GCT (Permissible Number of Gateways)

Set to 02 (Hex).

DNA (Destination Network Address)

Specifies the number of the network where the destination node is located. The address can be specified in the following range.

00 (Hex):	Local network
01 to 7F (Hex):	Destination network address (1 to 127)

DA1 (Destination Node Address

Specifies the number of the node where the command is being sent. This node address is the address used for FINS, and is different from the IP address used for Ethernet.

00 (Hex):	Local PLC Unit
01 to FE (Hex):	Destination node address (1 to 254)
FF (Hex):	Broadcasting

When multiple Communications Units are mounted, DA1 specifies the node address of the Unit connected to the network specified by DNA.

DA2 (Destination Unit Address)

Specifies the number of the Unit at the destination node.

00 (Hex):	PLC (CPU Unit)
10 to 1F (Hex):	CPU Bus Unit unit numbers 0 to15 (16 to 31)
E1 (Hex):	Inner Board
FE (Hex):	Unit connected to network.

SNA (Source Network Address)

Specifies the number of the network where the local node is located. The ranges of numbers that can be specified are the same as for DNA.

SA1 (Source Node Address)

Specifies the local node address. The ranges of numbers that can be specified are the same as for DA1.

SA1 (Source Unit Address)

Specifies the number of the Unit at the local node.The ranges of numbers that can be specified are the same as for DA2.

SID (Service ID)

The SID is used to identify the process that data is sent from. Any number can be set between 00 to FF hexadecimal for the SID. The same value set for the SID in the command is returned by the node sending the response, allowing commands and responses to be matched when commands are sent in succession to the same Unit.

7-3 FINS/UDP Method

7-3-1 Overview

FINS/UDP Features

The FINS/UDP method is a FINS communications method that uses the UDP/IP protocol. UDP/IP is a connectionless communications protocol. When a message is sent from one node to another, the two nodes have an equal relationship and there is no clear connection. If using TCP is like making a telephone call, then UDP is more like delivering a memo by hand. Although the UDP protocol is fast, data communications are less reliable than with TCP.

In particular, when sending large amounts of data involving significant routing, the user must program measures, such as retries, into applications in order to improve reliability.

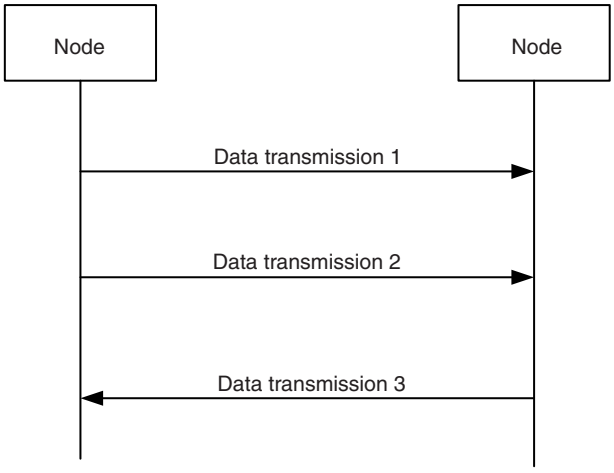

Data is sent in one direction, with no confirmation of whether the data was received. Because there are few procedures involved, data can be sent at high speed but with less reliability than with TCP.

The FINS/UDP method has the following features:

- Because FINS/UDP is a connectionless protocol, there is no limit to the number of corrections.
- FINS/UDP can be used for broadcasting.
- When data is sent via an IP network with multiple layers (such as the Internet), communications reliability drops.

FINS/UDP Frame Format

The following diagram shows the structure of a UDP packet used for sending and receiving data on an Ethernet network.

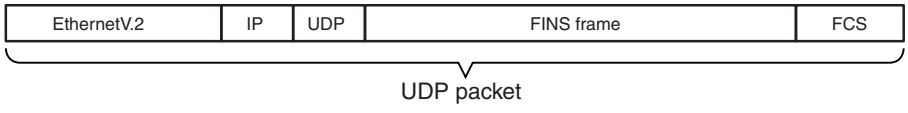

As the diagram shows, a nested structure is used with the FINS/UDP method, i.e., Ethernet Ver. 2, IP frame, UDP frame, and FINS frame. A UDP data section (FINS frame) that exceeds 1,472 bytes is split into packets for transmission. The split UDP data is then joined automatically at the UDP/IP protocol layer. There is normally no need to pay attention at the application layer to this split, but it may not be possible to send 1,472-byte UDP packets over an IP network with multiple layers. When using the FINS communications service in a system such as this, select the FINS/TCP method.

UDP Port Numbers for FINS/UDP

The UDP port number is the number for UDP to identify the application layer (i.e., the FINS communications service in this case). When communications are executed by UDP/IP, this port number must be allocated to the communications service.

The default setting for the FINS/UDP local UDP port number (i.e., the Ethernet Unit's UDP port number) is 9600. To set another number, make the setting for the FINS/UDP port using the Setup Tab in the Unit Setup.

At the Ethernet Unit, a UDP/IP frame received with a FINS/UDP port number is recognized as a FINS frame.

The UDP port number for the host application (e.g., personal computer) functions differently from the ports that can be used depending on the setting for the address conversion method at the Ethernet Unit. Basically, the same number can be used for the UDP port number set in the Ethernet Unit (default: 9600), but the number does not need to be the same as the Ethernet Unit under the following application conditions.

- Sending commands from the host application when the automatic generation (dynamic) method is used as the Ethernet Unit's address conversion method.
- Sending commands from the host application without registering the IP addresses in the IP table when the IP address table method is used as the Ethernet Unit's address conversion method.
- Sending commands from the host application without registering the IP addresses in the IP table when the combined method is used as the Ethernet Unit's address conversion method.

For each address conversion method, when commands are sent from the Ethernet Unit, use the same value set in the Ethernet Unit for the UDP port number of the host application.

Procedure for Using FINS/UDP

1. Make the basic settings.
   Refer to *SECTION 2 Startup Procedure* in the *Operation Manual Construction of Networks*.

↓

2. Make the settings in the Unit Setup.
   With the CX-Programmer connected online, select the Ethernet Unit in the CX-Programmer's I/O Table Window. Right-click, and select Unit Setup. Then make the following settings in the Unit Setup Window.
   Setup Tab
   - Broadcast
   - FINS/UDP port (Default: 9600)
   - IP address table (for the IP address table method or combined method)

↓

3. Make the routing table settings and transfer them to each PLC. (See note.)
   Set the routing tables with CX-Net, and transfer them to each PLC.

↓

4. Create a ladder program that includes the SEND(090), RECV(098), and CMND(490) instructions.

Note Routing tables are required in the following situations:

- When communicating with a PLC or computer on another network (e.g., remote programming or monitoring using FINS messages or a CX-Programmer).
- When multiple Communications Units are mounted to a single PLC (i.e., CPU Unit).
- When routing tables are used for one or more other nodes on the same network.

It is not necessary to set routing tables if one Communications Unit is mounted to the PLC and the nodes are connected as one network. For details on routing table, refer to the section on *Creating Routing Tables* in the *Operation Manual, Construction of Networks: Section 6 FINS Communications*.

7-3-2 Sending Commands from a Host Computer

When sending FINS commands from a computer, the command data in the computer's program must be created in command frame format. The frame formats are also used to decode the responses received from other network nodes.

Designating Remote Addresses

The host computer's UDP sockets are used when sending FINS commands from a host computer to a PLC. This section provides examples of addressing remote CPU Units from the host computer for communications.

Note

(1) The FINS UDP port number at the Ethernet Unit is set to the default of 9600. It can be changed in the Unit Setup.

(2) Even if the Ethernet network is comprised of multiple segments, set the same value for the FINS network address.

■ **Example 1: Host Computer and Remote Node (Ethernet Unit) on Same Network**

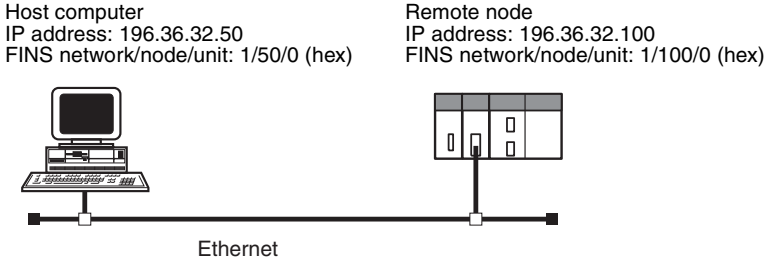

Communications Parameters Used by Host Computer

Destination IP Address: 196.36.32.100 (Ethernet Unit of remote node)
UDP port number: FINS UDP port No. (Ethernet Unit of remote node)
FINS addresses (Remote node CPU Unit):
Network address: 1
Node address: 100
Unit number: 0
FINS addresses (Host computer):
Network address: 1
Node address: 50
Unit number: 0

■ **Example 2: Host Computer and Remote Node Connected Via Relay Node (Ethernet Unit)**

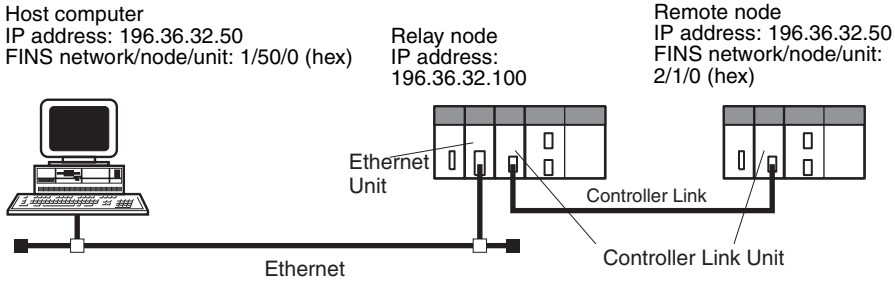

Destination IP Address: 196.36.32.100 (Ethernet Unit of relay node)

UDP port number: FINS UDP port number (Ethernet Unit of relay node)
FINS addresses (Remote node CPU Unit):
Network address: 2
Node address: 1
Unit number: 0
FINS addresses (Host computer):
Network address: 1
Node address: 50
Unit number: 0

FINS/UDP Sample Program

Operation Overview

- This program reads 150 words of the PLC memory beginning at D00100 by sending a FINS command (MEMORY AREA READ, command code 0101) from a UNIX workstation (WS) to the PLC on the Ethernet network.
- If no response is received within two seconds of sending the FINS command, the command will be resent.

Settings

- The Ethernet Unit IP address is 196.36.32.100, and the FINS node address is 100. IP address conversion is set to automatic generation (dynamic).
- The FINS UDP port number for the Ethernet Unit is 9600 (default).
- The workstation's IP address is 196.36.32.50 and its FINS node address is 50.
- The FINS UDP port number for the workstation can be a user-set number (if set to 0, the system automatically allocates an available port).

Sample Program

```
 1 #include <errno.h>
 2 #include <stdio.h>
 3 #include <sys/types.h>
 4 #include <sys/socket.h>
 5 #include <netinet/in.h>
 6 #include <signal.h>
 7
 8 #define FINS_UDP_PORT 9600
 9 #define SERV_IP_ADDR "196.36.32.100" /* Ethernet Unit IP ADDRESS*/
10 #define MAX_MSG 2010
11 #define RESP_TIMEOUT 2
12
13
14 /*
15 * FINS/UDP COMMUNICATIONS SAMPLE PROGRAM
16 */
17 main(argc,argv)
18 int    argc;
19 char *argv[];
20 {
21     int sockfd;
22     struct sockaddr_in    ws_addr, cs_addr;
23     char fins_cmnd[MAX_MSG], fins_resp[MAX_MSG];
24     int sendlen, recvlen, addrlen;
25     char sid = 0;
26     extern recv_fail();
27
28     /* GENERATE     UDP     SOCKET*/
29     if ((sockfd = socket(AF_INET,SOCK_DGRAM,0)) < 0)
30         err_exit("can't open datagram socket");
31
```

```
32    /* ALLOCATE    IP    ADDRESS    AND    PORT    #    TO    SOCKET*/
33    bzero((char *) &   s_addr,sizeof(ws_addr));
34    ws_addr.sin_family = AF_INET;
35    ws_addr.sin_addr.s_addr = htonl(INADDR_ANY);
36    ws_addr.sin_port = htons(0);    /*   GET AVAILABLE PORT FOR LOCAL UDP PORT  */
37    if (bind(sockfd,(struct sockaddr *)&ws_addr,sizeof(ws_addr)) < 0)
38        err_exit("can't bind local address");
39
40    /*
41    *  GENERATE MEMORY AREA READ COMMAND
42    * (READ 150 WORDS FROM DM 100)
43    */
44    fins_cmnd[0] = 0x80; /* ICF */
45    fins_cmnd[1] = 0x00; /* RSV */
46    fins_cmnd[2] = 0x02; /* GCT */
47    fins_cmnd[3] = 0x00; /* DNA */
48    fins_cmnd[4] = 0x64; /* DA1 *//* Ethernet Unit FINS NODE NUMBER*/
49    fins_cmnd[5] = 0x00; /* DA2 */
50    fins_cmnd[6] = 0x00; /* SNA */
51    fins_cmnd[7] = 0x32; /* SA1 *//* WS FINS NODE NUMBER*/
52    fins_cmnd[8] = 0x00; /* SA2 */
53    fins_cmnd[9] = ++sid; /* SID */
54    fins_cmnd[10] = 0x01; /* MRC */
55    fins_cmnd[11] = 0x01; /* SRC */
56    fins_cmnd[12] = 0x82; /* VARIABLE TYPE: DM*/
57    fins_cmnd[13] = 0x00; /* READ START ADDRESS: DM 100*/
58    fins_cmnd[14] = 0x64;
59    fins_cmnd[15] = 0x00;
60    fins_cmnd[16] = 0x00; /* WORDS READ: 150*/
61    fins_cmnd[17] = 0x96;
62
63    /* SEND FINS COMMAND*/
64    bzero((char *) &cs_addr,sizeof(cs_addr));
65    cs_addr.sin_family = AF_INET;
66    cs_addr.sin_addr.s_addr = inet_addr(SERV_IP_ADDR);
67    cs_addr.sin_port = htons(FINS_UDP_PORT);
68
69    signal(SIGALRM,recv_fail);
70
71CMND_SEND:
72    sendlen = 18;
73
74    if (sendto(sockfd,fins_cmnd,sendlen,0,&cs_addr,sizeof(cs_addr)) == sendlen)
75    {
76        alarm(RESP_TIMEOUT);     /*    START  RESPONSE  MONITOR  TIMER*/
77        printf("send length %d¥n",sendlen);
78    }
79    else
80    {
81        err_exit("send error");
82    }
83
84
```

```
 85     /* RECEIVE     FINS     RESPONSE*/
 86     addrlen = sizeof(cs_addr);
 87
 88     if ((recvlen = recvfrom(sockfd,fins_resp,MAX_MSG,0,&cs_addr,&addrlen)) < 0)
 89     {
 90         if (errno == EINTR)
 91             goto CMND_SEND;     /*  RE-SEND     FINS     COMMAND*/
 92         err_exit("receive error");
 93     }
 94     else
 95     {
 96         alarm(0);     /* STOP     RESPONSE     MONITOR     TIMER*/
 97         printf("recv length %d¥n",recvlen);
 98
 99         if (recvlen < 14)     /* ILLEGAL     RESPONSE     LENGTH     CHECK*/
100             err_exit("FINS length error");
101         if ((fins_cmnd[3] != fins_resp[6]) || (fins_cmnd[4] != fins_resp[7]) ||
102             (fins_cmnd[5] != fins_resp[8]) )
103         { /* DESTINATION     ADDRESS     CHECK*/
104             err_exit("illegal source address error");
105         }
106         if(fins_cmnd[9] != fins_resp[9])    /* SID CHECK*/
107             err_exit("illegal SID error");
108     }
109
110     /*  CLOSE     SOCKET*/
111     close(sockfd);
112
113 }
114
115
116 /*
117 *  ERROR     PROCESSING     FUNCTIONS
118 */
119 err_exit(err_msg)
120 char *err_msg;
121 {
122     printf("client: %s %x¥n",err_msg,errno);
123     exit(1);
124 }
125
126 /*
127 *  SIGNAL     CAPTURE     FUNCTIONS
128 */
129 recv_fail()
130 {
131     printf("response timeout error ¥n");
132 }
```

7-4 FINS/TCP Method

7-4-1 Overview

FINS/TCP Features

The FINS/TCP method is a FINS communications method that uses the TCP/IP protocol. TCP/IP is a connection-type communications protocol. Before a message is sent from one node to another, it is necessary to establish a virtual circuit, i.e., a connection. Once a connection has been established, communications are quite reliable. The arrival of data that is sent via the connection is confirmed by an acknowledgement (ACK) response, and retries are executed automatically as required.

The FINS/TCP method has been newly added to the CS1W-ETN21 and CJ1W-ETN21 Ethernet Units. When FINS/TCP is used, it must be determined which node is the server and which is the client.

For communications between a personal computer and a PLC, the computer should normally be set as the client and the PLC as the server. For communications between two PLCs, either one can be set as the client and the other as the server.

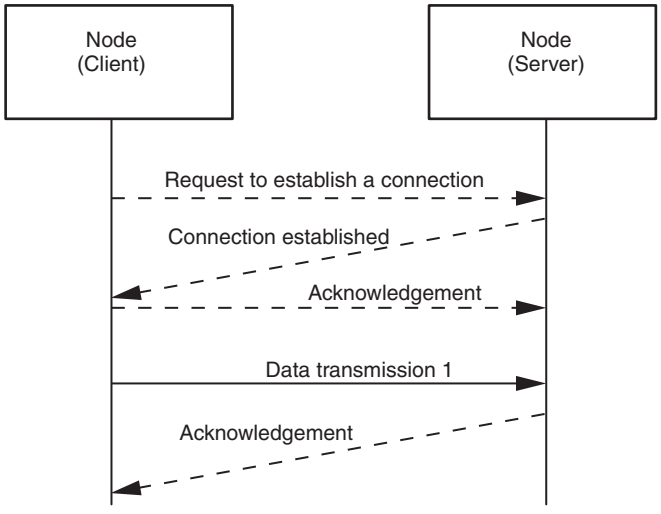

An acknowledgement is received whenever a connection is established or data is sent, so transmissions are more reliable but somewhat slower.

Compared to the FINS/UDP method, the FINS/TCP method has the following characteristics.

- Data transmission is more reliable, due to factors such as retry processing at the TCP/IP layer. The FINS/TCP method is thus better suited to dealing with communications errors in an IP network that spans several layers.
- Remote clients can be restricted by means of settings at the server (i.e., the server can be protected from access by non-specified IP addresses).
- Broadcasting cannot be used.
- TCP/IP has various retry procedures, and this tends to lower its performance in comparison with UDP/IP.
- There is a limit to the number of connections that can be made (i.e., 16 connections maximum), and any given node can communicate only with up to 16 other nodes at a time.

- Once a FINS/TCP connection (connection number, remote IP address) has been set in the Unit Setup, it can be dynamically changed from the ladder program using a FINS command (i.e., FINS/TCP CONNECTION REMOTE NODE CHANGE REQUEST).

FINS/TCP Frame Format

The following diagram shows the structure of a TCP packet sent over an Ethernet network.

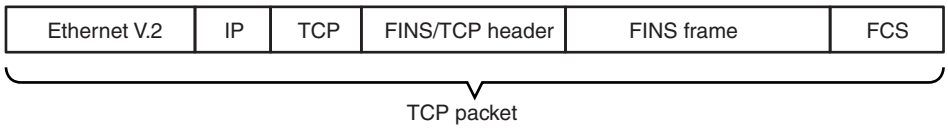

As the diagram shows, a nested structure is used with the FINS/TCP method, i.e., Ethernet Ver. 2, IP frame, TCP frame, FINS/TCP header frame, and FINS frame. A TCP data section (FINS/TCP header + FINS frame) that exceeds the segment size (Ethernet Unit default: 1,024 bytes, with automatic adjustment for optimum values between the nodes) is split into TCP packets for transmission. The split TCP data tends to be joined automatically at the remote node's TCP/IP protocol layer. The TCP/IP protocol layer, however, cannot determine where the data has been split, so the TCP data sections from multiple packets are all joined together. Therefore, when using the FINS/TCP method, FINS/TCP headers must be added at the beginning of FINS frames in order to serve as FINS frame delimiters. The length of the data in the following FINS frame is stored in the header, allowing the frame to be separated out by the remote node. With the Ethernet Unit and FinsGateway Ver. 2003 the appropriate frames are separated out automatically. When constructing applications using the TCP/IP socket interface on the host computer, processing is required to separate out the FINS frames.

TCP Port Number for FINS/TCP

The TCP port number is the number for TCP to identify the application layer (i.e., the FINS communications service in this case). When communications are executed using TCP/IP, this port number must be allocated for the communications service.

The Ethernet Unit’s default setting for the FINS/TCP local TCP port number (i.e., the Ethernet Unit's TCP port number) is 9600. To set another number, make the setting for the FINS/TCP port using the Setup Tab in the Unit Setup.

The FINS/TCP port number set in the Unit Setup is used by the FINS/TCP server's TCP socket. The FINS/TCP client's TCP socket uses any TCP port number that can be used at that node. (With the Ethernet Unit and FinsGateway Ver. 2003, an unused TCP port is automatically detected and utilized.)

At the Ethernet Unit, a TCP/IP frame that is received is recognized as a FINS frame, according to the remote TCP port number in the received frame.

The host application is normally used as the FINS/TCP client. A user-set number can be set for the TCP port number used by the host application.

Note

(1) The default for the Ethernet Unit is 1,024 bytes, and the size is automatically adjusted to the best value between nodes.

(2) FINS/TCP header + FINS frame

FINS/TCP Connection Numbers

FINS/TCP allows up to 16 FINS/TCP connections to be established simultaneously, and these 16 connections are managed at the Ethernet Unit by connection numbers. When setting connections by means of the FINS/TCP settings in the CX-Programmer's Unit Setup, set them individually using these connection numbers.

FINS/TCP Connection Status (Word n+23)

While a connection with a remote node is established, the bit corresponding to the FINS/TCP connection status turns ON in the section of the CPU Bus Unit words allocated in the CIO Area. The bit turns OFF if the connection is terminated by an error in communications with a remote node or a FINS command (i.e., FINS/TCP CONNECTION REMOTE NODE CHANGE REQUEST).

	15	14	13	12	11	10	09	08	07	06	05	04	03	02	01	00
n+23																

*: Bit 15 corresponds to connection No. 16, bit 00 to connection No. 1, etc.

FINS/TCP Communications Procedure

With FINS/TCP, FINS node addresses are exchanged immediately after a connection is established. This makes it possible to determine the FINS node addresses to which the 16 connection numbers are connected, and to manage them in an internal table.

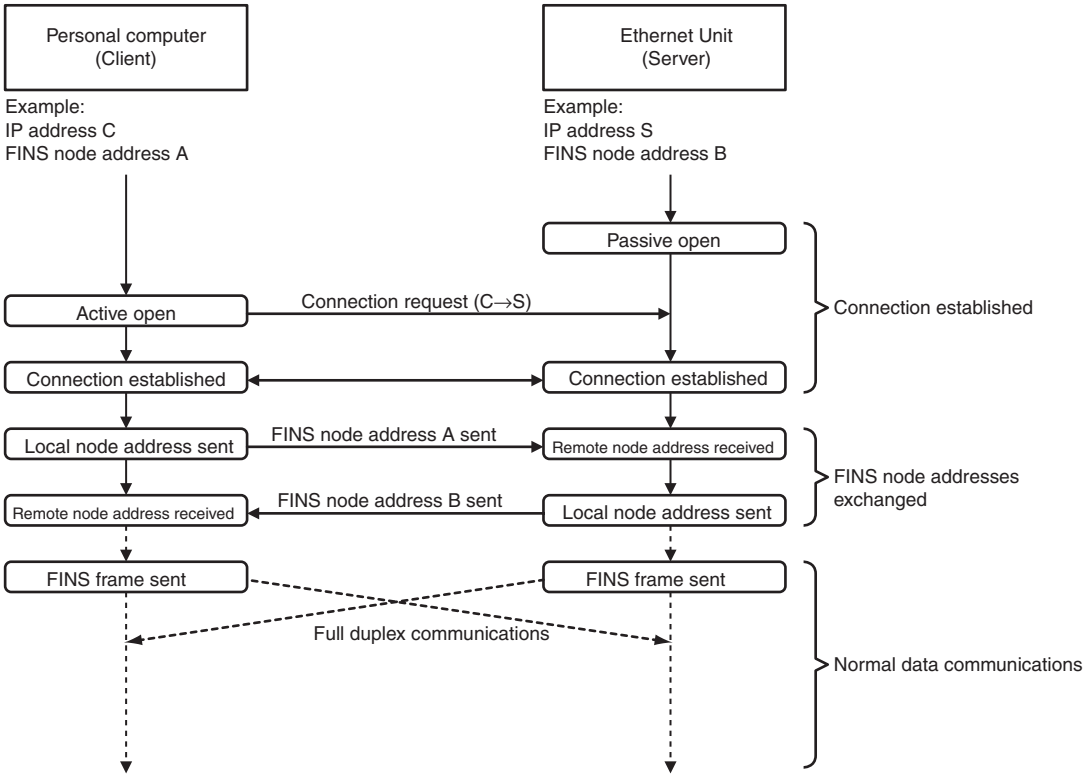

After a connection has been established as a FINS/TCP server, it is terminated in the following ways.

- When the connection is closed by the client.
- When a FINS command to close the connection (FINS/TCP CONNECTION REMOTE NODE CHANGE REQUEST: command code 27 30 hexadecimal) is sent by the client.
- When there is no response from the client when the keep-alive function is in effect.
- If a command other than FINS FRAME SEND is received from the client, the connection will close after the FINS FRAME SEND ERROR NOTIFICATION command is sent.

After a connection has been established as a FINS/TCP client, it can be terminated in the following ways.

- If the connection is closed by the server.

- If there is no response from the client when the keep-alive function is in effect.
- If a command other than FINS FRAME SEND or CONNECTION CONFIRMATION is received from the server, the connection will close after the FINS FRAME SEND ERROR NOTIFICATION command is sent.

Even if the connection is closed at the FINS/TCP client, requests continue to be made to the FINS/TCP server every few seconds to open a connection.

Note After the Ethernet Unit power is turned ON or the Unit is restarted, the IP address for the connection used as the FINS/TCP client is the remote IP address set under the FINS/TCP Tab in the Unit Setup.
To dynamically change the remote IP address (i.e., during CPU Unit operation), execute the CMND(490) instruction in the ladder program and send a FINS command (FINS/TCP CONNECTION REMOTE NODE CHANGE REQUEST: command code 27 30 hexadecimal) to the Ethernet Unit.

Automatic Allocation of FINS Node Addresses

When the FINS message service is used, a FINS node addresses must also be allocated in the host application for communications. The FINS node addresses used by the host application are normally allocated in advance using fixed allocations. When the FINS/TCP procedure is used, however, the FINS node addresses used by the host application can be allocated automatically at the Ethernet Unit.

■ Automatic Allocation Procedure

When exchanging FINS node addresses, node address 0 (node address not set) is used for the client. At the server that receives the information, a number from the automatically allocated node addresses (default: 239 to 254) controlled by the server that has not established a connection is automatically allocated, and the FINS node address is sent to the client.

After exchanging the FINS node addresses, the client uses the allocated node address (default: 239 to 254) to create FINS frames (substituting the value allocated in SA1 of the FINS header).

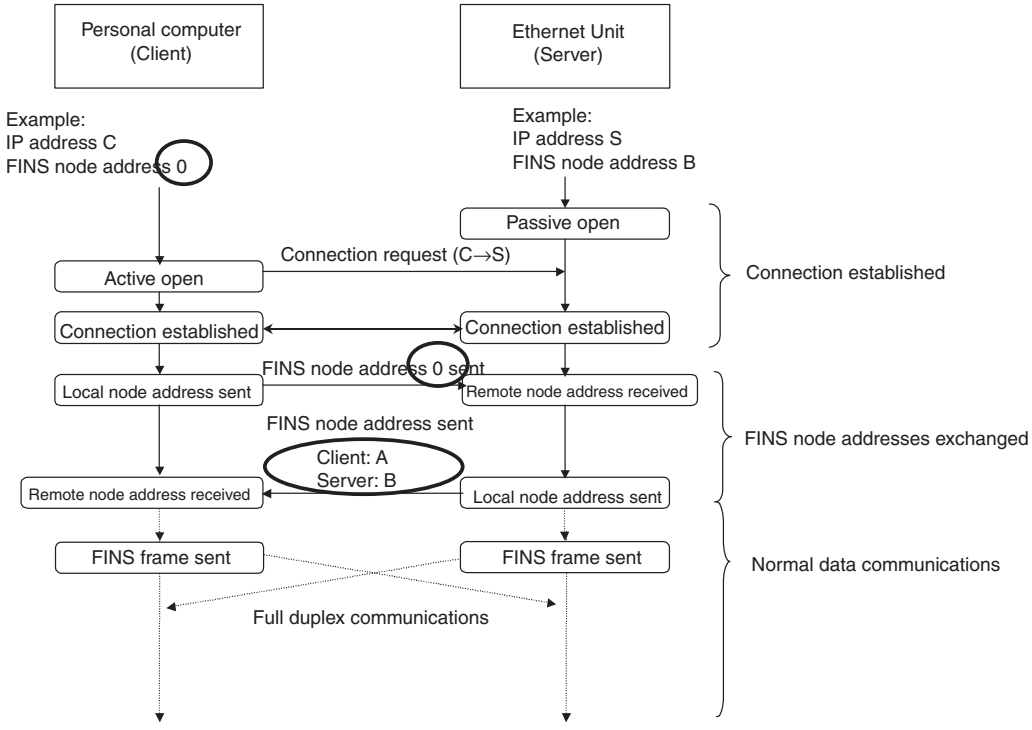

■ Setting Range for Automatic Allocation of FINS Node Addresses

The range of node addresses that can be used as automatically allocated FINS node addresses is set in the Ethernet Unit's Unit Setup. Normally (default status), node addresses 239 to 254 are allocated to each of the connections 1 to 16. These allocations can be changed, but the default node address setting range should be used if there is no particular reason for changing it. When automatically allocated FINS node addresses are used, the node addresses 239 to 254 are used for connecting to the host application, so set the node address of the Ethernet Unit to a number outside this range.

■ Changing the Setting Range for Automatic Allocation of FINS Node Addresses

Select the **FINS/TCP** Tab in the CX-Programmer Unit Setup. In the FINS/TCP Tab, the allocated settings are displayed in a list for each connection number.

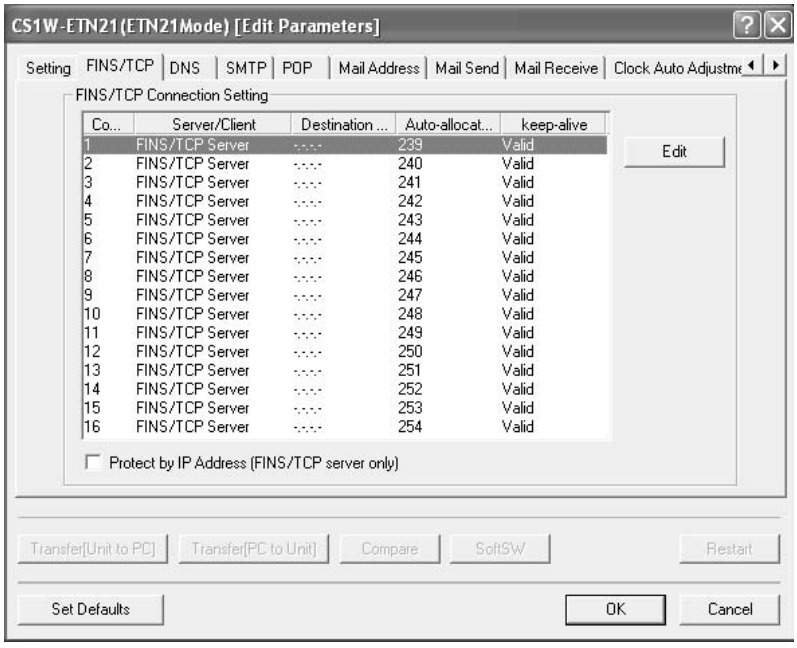

To change the automatically allocated FINS node addresses, use the mouse to select the connection number to be changed, and click the **Edit** Button. The FINS/TCP Connection Setting Dialog Box will be displayed.

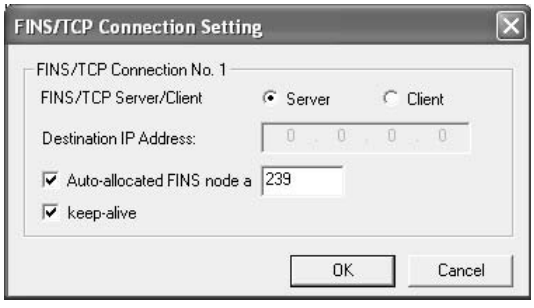

The FINS node address allocated to the connection is displayed to the right of the *Automatically Allocated FINS Node Address* field. Change this number and click the **OK** Button. After setting, complete the operation by transferring the settings to the Ethernet Unit, in the same way as for normal Unit Setup data.

Note (1) Keep-alive Setting

The keep-alive function checks that the connection is still established

(alive) if communications do not occur for a set time period through a communications line for which communications had been established. Even if the keep-alive function is not specified at the Ethernet Unit, a response is sent for checks sent from other nodes. If the power is turned OFF to the host application (e.g., personal computer) while a connection is established, the connection is no longer required, but will remain open until explicit close processing is performed. If the keep-alive option is selected, the connection is checked periodically, and close processing is performed if a response is not received. For normal operations, select the keep-alive option.

(2) Keep-alive Monitor Time Setting
The liveness checking interval (keep-alive) can be set from the CX-Programmer in the *TCP/IP keep-alive* field of the Setup Tab in the Unit Setup. The default setting is 120 minutes, as defined in RFC, but setting the timer to several minutes is recommended when using FINS/TCP or other control applications.

Procedure for Using FINS/TCP

1. Make the basic settings.
   Refer to *Section 2 Startup Procedure* in the *Operation Manual, Construction of Networks*.

↓

2. Make the settings in the Unit Setup.
   With the CX-Programmer connected online, select the Ethernet Unit in the CX-Programmer's I/O Table Window. Right-click, and select Unit Setup. Then make the following settings in the Unit Setup Window.

   Setup Tab
   - FINS/TCP port (Default: 9600)
   - TCP/IP keep-alive (Default: 120 minutes)

   FINS/TCP Tab
   - FINS/TCP server/client
     Note: Set the server when connecting to host applications.
   - Remote IP addresses

   Note: When connecting to host applications, set the IP address of the permitted client (personal computer or workstation) only when IP address protection is in effect. Do not set if protection is not required.
   - Automatically allocated FINS node addresses
   - Keep-alive setting
   - IP addresses protection setting

   Note: When connecting to host applications, select this setting only when IP address protection is in effect.

↓

3. Make the routing table settings and transfer them to each PLC. (See note.)
   Set the routing tables with CX-Net, and transfer them to each PLC.

↓

4. Create host applications using a programming language such as C language and the personal computer's (workstation's) socket interface.

Note Routing tables are required in the following situations:

- When communicating with a PLC or computer on another network (e.g., remote programming or monitoring using FINS messages or a CX-Programmer).

- When multiple Communications Units are mounted to a single PLC (i.e., CPU Unit).
- When routing tables are used for one or more other nodes on the same network.

It is not necessary to set routing tables if one Communications Unit is mounted to the PLC and the nodes are connected as one network.

For details on setting routing tables, refer to the section on creating routing tables in *Section 6 FINS Communications* in the *Operation Manual, Construction of Networks*.

7-4-2 FINS/TCP Mode Specifications

FINS/TCP Headers

FINS NODE ADDRESS DATA SEND (CLIENT TO SERVER) Command

When this command is executed, the client node stores its own FINS node address in the client node address and notifies the server. This command is sent after the TCP connection is established (ESTABLISH).

When specifying automatically allocated FINS node addresses, specify 00000000 hexadecimal for the client node address.

After a connection has been established as a FINS/TCP client or server, do not send this command again. Otherwise, the error code (00000003 hexadecimal: The command is not supported) will be received in the FINS FRAME SEND ERROR NOTIFICATION command and the connection will be terminated.

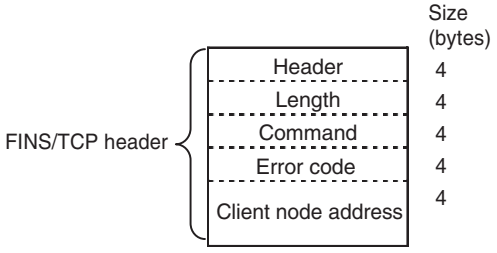

The details of the above frame are shown in the following table.

Item	Contents (hexadecimal)	Remarks
Header	46494E53	ASCII code: ‘FINS’
Length	0000000C	12 bytes: Length of data from command onwards.
Command	00000000	
Error code	00000000	Not used, so does not require checking by server.
Client node address (FINS node address of FINS/TCP client)	00000000 to 000000FE	0 to 254 **Note:** Client FINS node addresses are automatically obtained when set to 0.

FINS NODE ADDRESS DATA SEND (SERVER TO CLIENT) Command

When this command is executed, the server node notifies the client of its own FINS node address. This command is sent after the server has received the FINS NODE ADDRESS DATA SEND (CLIENT TO SERVER) command. The FINS NODE ADDRESS DATA SEND (CLIENT TO SERVER) command received by the server is decoded and if any errors are detected, the error details are sent by adding to the Error Code in the command, and then the connection is closed.

When this command is received by the client node, the TCP/IP port must be closed quickly, unless the contents of the Error Code are 00000000 hexadecimal (normal).

When automatically allocated FINS node addresses are set, the client node address automatically allocated at the server is stored in the client node address field.

After a connection has been established as a FINS/TCP client or server, do not send this command again. Otherwise, the error code (00000003 hexadecimal: The command is not supported) will be received in the FINS FRAME SEND ERROR NOTIFICATION command and the connection will be terminated.

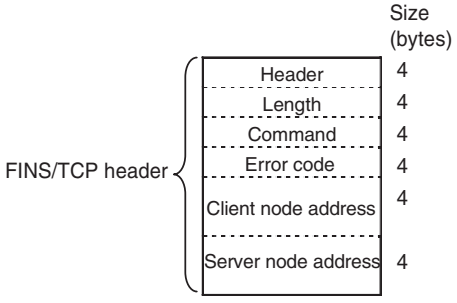

The details of the above frame are shown in the following table.

Item	Contents (hexadecimal)	Remarks
Header	46494E53	ASCII code: 'FINS'
Length	00000010	16 bytes: Length of data from command onwards.
Command	00000001	
Error code	---	Refer to the following table of error codes.
Client node address (FINS node address of FINS/TCP client)	00000001 to 000000FE	1 to 254
Server node address (Fins node address of FINS/TCP server)	00000001 to 000000FE	1 to 254

The following table shows the list of error codes.

Error code (hexadecimal)	Details
00000000	Normal
00000001	The header is not 'FINS' (ASCII code).
00000002	The data length is too long.
00000003	The command is not supported.
00000020	All connections are in use.
00000021	The specified node is already connected.
00000022	Attempt to access a protected node from an unspecified IP address.
00000023	The client FINS node address is out of range.
00000024	The same FINS node address is being used by the client and server.
00000025	All the node addresses available for allocation have been used.

FINS FRAME SEND Command

When FINS frames are sent using TCP/IP, always add the FINS FRAME SEND command to the beginning of the FINS frame. The FINS frame is separated out from the TCP data line following the data length in the FINS FRAME SEND command.

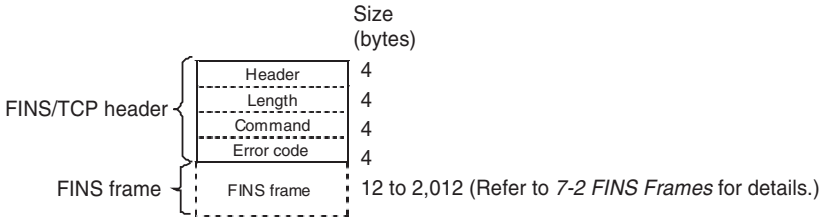

The details of the above frame are shown in the following table.

Item	Contents (hexadecimal)	Remarks
Header	46494E53	ASCII code: 'FINS'
Length	00000014 to 000007E4	20 to 2020 bytes: Length of data after command.
Command	00000002	
Error code	00000000	Not used, so does not require checking by at the receiving end.
FINS frame	---	From FINS header ICF to end of data.

FINS FRAME SEND ERROR NOTIFICATION Command

If an error occurs in the FINS/TCP header of the FINS FRAME SEND command, this command is used so that an error code will be returned to the node that sent the FINS FRAME SEND command by the node that detected the error. When this command is sent, the source node closes the connection. The node that receives the command must close the connection quickly.

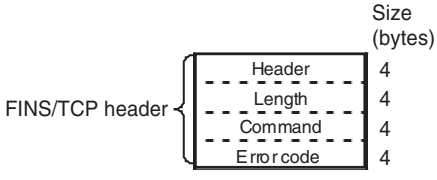

The details of the above frame are shown in the following table.

Item	Contents (hexadecimal)	Remarks
Header	46494E53	ASCII code: 'FINS'
Length	00000008	8 bytes: Length of data from command onwards.
Command	00000003	
Error code	---	Refer to the following table of error codes.

The following table shows the list of error codes.

Error code (hexadecimal)	Details
00000000	Normal
00000001	The header is not 'FINS' (ASCII code).
00000002	The data length is too long.
00000003	The command is not supported.

CONNECTION CONFIRMATION Command

This command is sent when the FINS NODE ADDRESS DATA SEND (CLIENT TO SERVER) command is received from a client with the same IP address and FINS node address as another client with a connection that is already established. The client that receives this command will simply destroy the frames.

After the command is sent, if ACK is returned in the TCP layer by the remote node, the connection that is established is maintained. If RST is returned in the TCP layer by the remote node, the established connection is closed.

If the FINS NODE ADDRESS DATA SEND (CLIENT TO SERVER) or FINS NODE ADDRESS DATA SEND (SERVER TO CLIENT) command is received after a connection has already been established as a FINS/TCP client and server, the error code (00000003 hexadecimal: command not supported) will be sent in the FINS FRAME SEND ERROR NOTIFICATION command, and the connection will be terminated.

The error code (00000021 hexadecimal: specified node already connected) will be sent using an FINS NODE ADDRESS DATA SEND (SERVER TO CLIENT) command to the connected node that received FINS NODE ADDRESS DATA SEND (CLIENT TO SERVER) from the client with the same FINS node address as the currently open connection, regardless of the result. Do not send this command from the client. (The error code (00000003 hexadecimal: command not supported) will be sent in the FINS FRAME SEND ERROR NOTIFICATION command, and the connection will be terminated.)

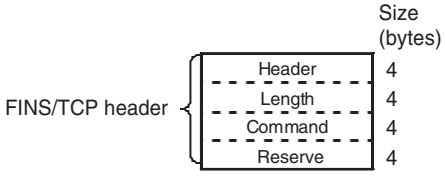

The details of the above frame are shown in the following table.

Item	Contents (hexadecimal)	Remarks
Header	46494E53	ASCII code: ‘FINS’
Length	00000008	8 bytes: Length of data after command.
Command	00000006	
Error code	00000000	Not used, so does not require checking at the receiving end (client).

Connection Sequence

Normal Operation

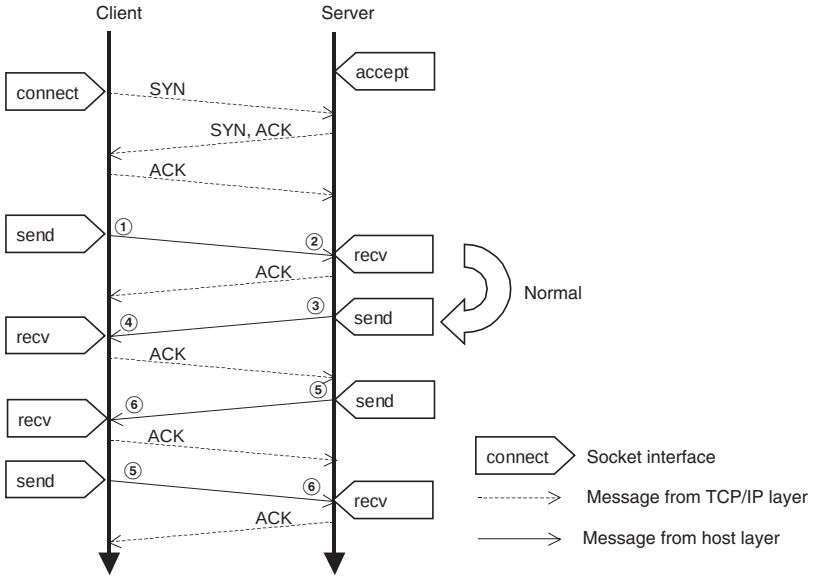

1,2,3...

1. After the TCP connection is established, the client node address is sent by the client to the server using the FINS NODE ADDRESS DATA SEND (CLIENT TO SERVER) command.
2. The client's FINS node address (client node address) is obtained from the received command.
3. The server's node address is sent by the server to the client using the FINS NODE ADDRESS DATA SEND (SERVER TO CLIENT) command.
4. The server's FINS node address is obtained from the received command.
5. The FINS message is sent using the FINS FRAME SEND command.
6. The FINS message is separated out from the received command.

Note In steps 5 and 6 both the client and server can send and receive FINS messages (commands/responses) in both directions.

Error Connection Sequence

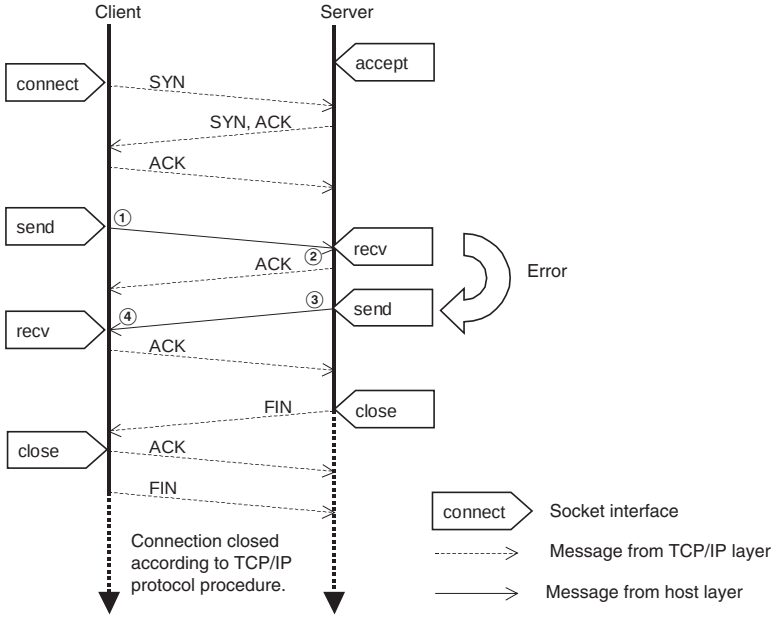

1,2,3...

1. The client sends the FINS NODE ADDRESS DATA SEND (CLIENT TO SERVER) command to the server.
2. The received command is decoded (e.g., if an error occurs, the code that is not 'FINS' (ASCII code) in the command header is stored.)
3. The server sends the error code for the detected error (in this example, 00000001 hexadecimal: Header is not 'FINS' (ASCII code)) in the FINS NODE ADDRESS DATA SEND (SERVER TO CLIENT) command to the client, and the TCP/IP port is closed.
4. The error code for the received command is decoded, and the TCP/IP port is closed.

Connection Sequence for Automatic Allocation of FINS Node Addresses

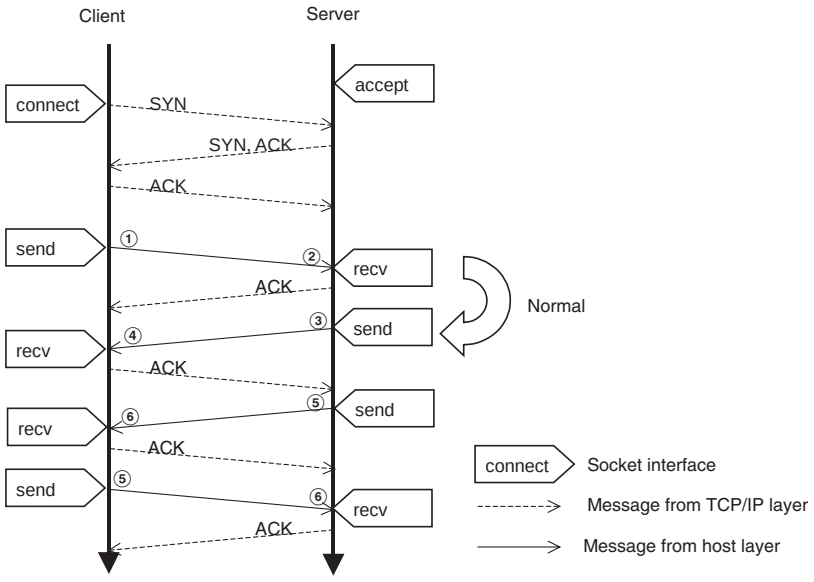

1,2,3...

1. The client specifies the client node address as 00000000 hexadecimal in the server as the automatically allocated FINS node address, and sends it using the FINS NODE ADDRESS DATA SEND (CLIENT TO SERVER) command.
2. The server checks the client node address in the received command to see whether an automatically allocated FINS node address is specified, and the client node address is determined from the automatically allocated FINS node addresses controlled by the server.
3. The server stores its own node address in the server node address field and the automatically allocated client FINS node address in the client node address field, and sends to the client using the FINS NODE ADDRESS DATA SEND (SERVER TO CLIENT) command.
4. The server node address is obtained from the server node address field in the received command, and the client node address is obtained from the client node address field.
5. A FINS message is sent using the FINS FRAME SEND command.
6. The FINS message is separated out from the received command.

Note In steps 5 and 6, both the client and server can send and receive FINS messages (commands/responses) in both directions.

Recovery Connection Sequence when Host Computer (WS) is Stopped by an Error

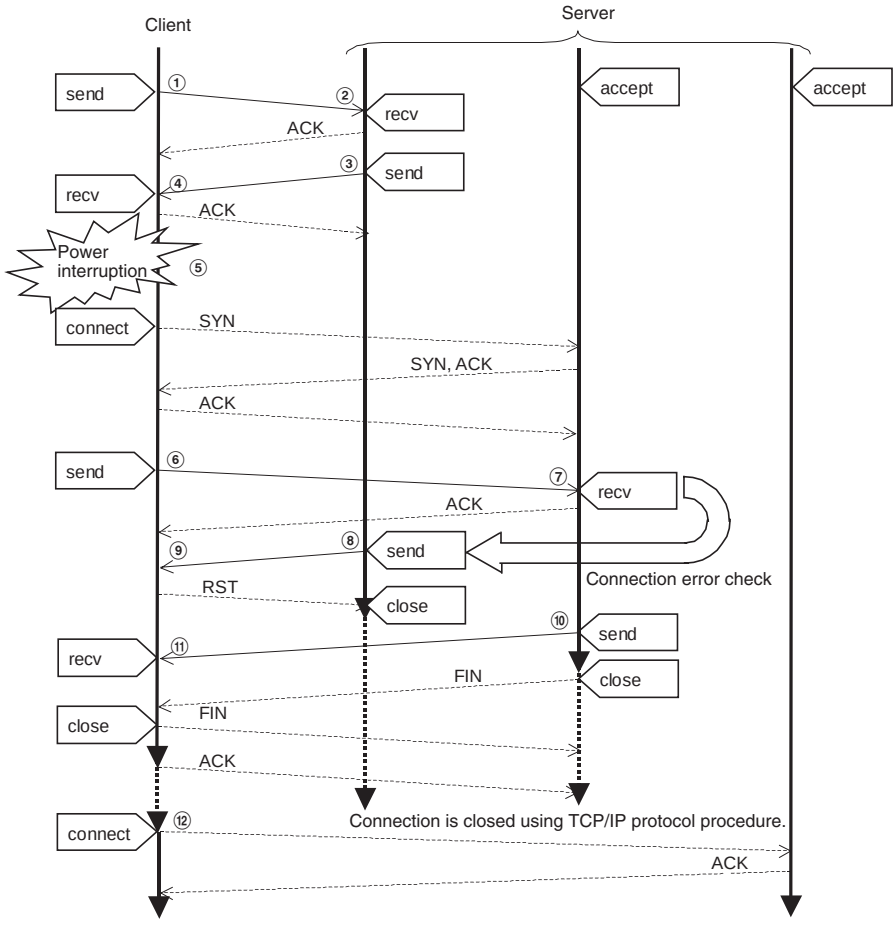

1,2,3... In steps 1 to 4 the FINS message send and receive processing is performed using the FINS FRAME SEND command.

5. This example assumes that the host computer's power is unexpectedly interrupted. The normal close processing cannot be performed at the host computer, and an attempt is made to establish a TCP connection at startup of the application after the power is turned ON again.
6. After establishing a TCP connection, the client sends the client node address to the server using the FINS NODE ADDRESS DATA SEND (CLIENT TO SERVER) command.
7. From the received command, the client's node address is confirmed. At this time, the server determines that an attempt is being made to establish a connection with the same node address (see note), and detects a connection error.
8. The server sends a CONNECTION CONFIRMATION command to the client.
9. The client has lost the connection information from before the power interruption, so sends a response with an RST frame in the TCP layer. The server that received the RST response closes the connection.
10. The server sends the error code (00000021 hexadecimal: Specified node is already connected) to the client using the FINS NODE ADDRESS DATA SEND (SERVER TO CLIENT) command.
11. The error code in the received command is also decoded by the client, and the TCP/IP port is closed.

From step 12 onwards, the connection is established again.

Note When FINS node addresses are automatically allocated, the node address cannot be specified, so the connection remains open until it is closed by the keep-alive function.

7-4-3 Sending Commands from a Host Computer

When sending FINS commands from a computer, the command data in the computer's program must be created in command frame format. The frame formats are also used to decode the responses received from other network nodes.

Designating Remote Addresses

The host computer's TCP sockets are used when sending FINS commands from a host computer to a PLC. This section provides examples of addressing remote CPU Units from the host computer for communications.

Note

(1) The FINS TCP port number at the Ethernet Unit is set to the default of 9600. It can be changed in the Unit Setup.

(2) Even if the Ethernet network is comprised of multiple segments, set the same value for the FINS network address.

■ **Example 1: Host Computer and Remote Node (Ethernet Unit) on Same Network (Intranet)**

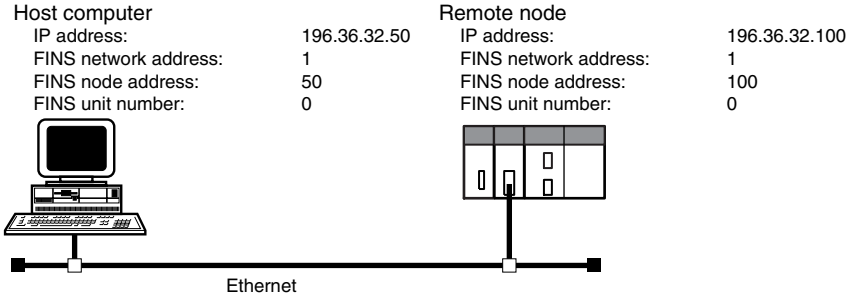

Communications Parameters Used by Host Computer

Destination IP Address: 196.36.32.100 (Ethernet Unit of remote node)
UDP port number: FINS UDP port No. (Ethernet Unit of remote node)
FINS addresses (Remote node CPU Unit):
Network address: 1
Node address: 100
Unit number: 0
FINS addresses (Host computer):
Network address: 1
Node address: 50
Unit number: 0

■ **Example 2: Host Computer and Remote Node Connected Via Relay Node (Ethernet Unit)**

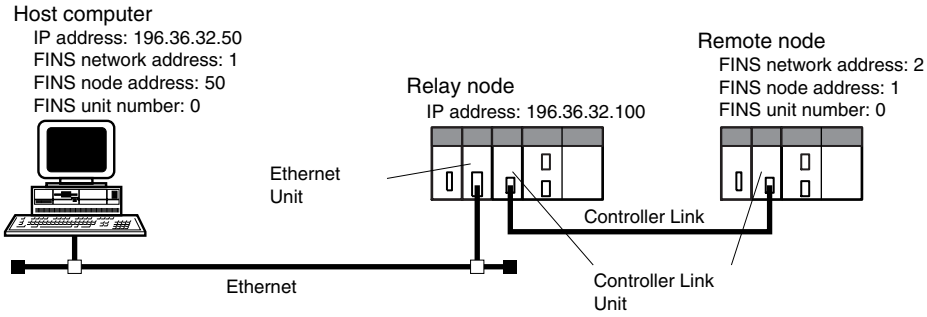

Destination IP Address: 196.36.32.100 (Ethernet Unit of relay node)
UDP port number: FINS UDP port number (Ethernet Unit of relay node)
FINS addresses (Remote node CPU Unit):
Network address: 2
Node address: 1
Unit number: 0
FINS addresses (Host computer):
Network address: 1
Node address: 50
Unit number: 0

FINS/TCP Sample Program

Operation Overview

- This program reads 150 words of the PLC memory beginning at D00100 by sending a FINS command (MEMORY AREA READ, command code 0101) from a UNIX workstation (WS) to the PLC on the Ethernet network.
- If no response is received within two seconds of sending the FINS command, an error will occur.

Settings

- The Ethernet Unit IP address is 196.36.32.100, and the FINS node address is 100.
- The FINS TCP port number at the Ethernet Unit (server side) is 9600 (default).
- The workstation's IP address is 196.36.32.50 and the FINS node address is allocated automatically.
- The FINS TCP port number at the workstation (client side) can be user-set (if set to 0, the system automatically allocates an available port).

Sample Program

```
 1 #include <errno.h>
 2 #include <stdio.h>
 3 #include <sys/types.h>
 4 #include <sys/socket.h>
 5 #include <netinet/in.h>
 6 #include <signal.h>
 7
 8 #define FINS_TCP_PORT 9600
 9 #define SERV_IP_ADDR    "196.36.32.100"/* Ethernet Unit IP ADDRESS*/
10 #define MAX_MSG 2010
11 #define MAX_HEADER 32
12 #define RESP_TIMEOUT 2
13
14
15 /*
16 * FINS/TCP   COMMUNICATIONS SAMPLE PROGRAM
17 */
18 main(argc,argv)
19 int    argc;
20 char *argv[];
21 {
22     int sockfd;
23     struct sockaddr_in    ws_addr, cs_addr;
24     unsigned char fins_cmnd[MAX_MSG], fins_resp[MAX_MSG], fins_tcp_header[MAX_HEADER];
25     unsigned char srv_node_no, cli_node_no;
26     int sendlen, recvlen;
27     char sid = 0;
28     extern recv_fail();
29
30     /*GENERATE     TCP     SOCKET*/
31     if ((sockfd = socket(AF_INET,SOCK_STREAM,0)) < 0)
32         err_exit("can't open stream socket");
```

```
33
34    /* ALLOCATE IP ADDRESS AND PORT # TO SOCKET*/
35    bzero((char *) &ws_addr,sizeof(ws_addr));
36    ws_addr.sin_family = AF_INET;
37    ws_addr.sin_addr.s_addr = htonl(INADDR_ANY);
38    ws_addr.sin_port = htons(0); /* ASSIGN LOCAL TCP PORT NUMBER
39
40    if (bind(sockfd,(struct sockaddr *)&ws_addr,sizeof(ws_addr)) < 0)
41        err_exit("can't bind local address");
42
43    /* ESTABLISH CONNECTION WITH FINS/TCP SERVER*/
44    bzero((char *) &cs_addr,sizeof(cs_addr));
45    cs_addr.sin_family = AF_INET;
46    cs_addr.sin_addr.s_addr = inet_addr(SERV_IP_ADDR);
47    cs_addr.sin_port = htons(FINS_TCP_PORT);
48
49    if (connect(sockfd,(struct sockaddr *)&cs_addr,sizeof(cs_addr)) < 0)
50        err_exit("can't connect to FINS/TCP server");
51
52
53    /* SEND FINS/TCP COMMAND*/
54    /*
55    * GENERATE FINS NODE NUMBER DATA SEND COMMAND (CLIENT TO SERVER)
56    */
57    fins_tcp_header[0] = 'F'; /* Header      */
58    fins_tcp_header[1] = 'I';
59    fins_tcp_header[2] = 'N';
60    fins_tcp_header[3] = 'S';
61    fins_tcp_header[4] = 0x00; /* Length */
62    fins_tcp_header[5] = 0x00;
63    fins_tcp_header[6] = 0x00;
64    fins_tcp_header[7] = 0x0C;
65    fins_tcp_header[8] = 0x00; /* Command */
66    fins_tcp_header[9] = 0x00;
67    fins_tcp_header[10] = 0x00;
68    fins_tcp_header[11] = 0x00;
69    fins_tcp_header[12] = 0x00; /* Error Code */
70    fins_tcp_header[13] = 0x00;
71    fins_tcp_header[14] = 0x00;
72    fins_tcp_header[15] = 0x00;
73    fins_tcp_header[16] = 0x00; /* Client Node Add */
74    fins_tcp_header[17] = 0x00;
75    fins_tcp_header[18] = 0x00;
76    fins_tcp_header[19] = 0x00; /*AUTOMATICALLY GET FINS CLIENT FINS NODE NUMBER*/
77
78    /* SEND FINS/TCP COMMAND*/
79    sendlen = 20;
80
81    if (send(sockfd,fins_tcp_header,sendlen,0) == sendlen)
82    {
83        alarm(RESP_TIMEOUT);    /* START RESPONSE MONITOR TIMER*/
84        printf("FINS/TCP header send length %d¥n",sendlen);
85    }
```

```
86   else
87   {
88       err_exit("FINS/TCP header send error");
89   }
90
91   /*RECEIVE FINS/TCP COMMAND (READ RECEIVE FUNCTIONS)*/
92   recvlen = 24;
93   if (tcp_recv(sockfd, fins_tcp_header, recvlen) == recvlen)
94   {
95       alarm(0);  /*STOP RESPONSE MONITOR TIMER*/
96
97       /* CONFIRM WHETHER FINS NODE NUMBER SEND COMMAND
             (CLIENT TO SERVER) WAS RECEIVED*/
98       if ((fins_tcp_header[8] != 0x00) || (fins_tcp_header[9] != 0x00) ||
99           (fins_tcp_header[10] != 0x00) || (fins_tcp_header[11] != 0x01))
100      {
101          err_exit("FINS/TCP illegal command error");
102      }
103
104      printf("FINS/TCP header receive length %d¥n",recvlen);
105      cli_node_no = fins_tcp_header[19];
106      srv_node_no = fins_tcp_header[23];
107      printf("FINS/TCP client Node No. = %d¥n",cli_node_no);
108      printf("FINS/TCP server Node No. = %d¥n",srv_node_no);
109  }
110  else
111  {
112      err_exit("TCP receive error");
113  }
114
115  /*  SEND FINS/TCP COMMAND*/
116  /*
117  *  GENERATE FINS COMMAND FRAME
118  */
119  fins_tcp_header[0] = 'F';  /* Header  */
120  fins_tcp_header[1] = 'I';
121  fins_tcp_header[2] = 'N';
122  fins_tcp_header[3] = 'S';
123  fins_tcp_header[4] = 0x00; /* Length  */
124  fins_tcp_header[5] = 0x00;
125  fins_tcp_header[6] = 0x00;
126  fins_tcp_header[7] = 8+18;  /*Length of data from Command up to end of FINS frame */
127  fins_tcp_header[8] = 0x00; /* Command  */
128  fins_tcp_header[9] = 0x00;
129  fins_tcp_header[10] = 0x00;
130  fins_tcp_header[11] = 0x02;
131  fins_tcp_header[12] = 0x00; /* Error Code */
132  fins_tcp_header[13] = 0x00;
133  fins_tcp_header[14] = 0x00;
134  fins_tcp_header[15] = 0x00;
135
136  /*  SEND FINS/TCP COMMAND*/
137  sendlen = 16;
138  if (send(sockfd,fins_tcp_header,sendlen,0) == sendlen) {
```

```
139     alarm(RESP_TIMEOUT);    /*    START RESPONSE MONITOR TIMER*/
140     printf("FINS/TCP header send length %d¥n",sendlen);
141     }
142     else {
143     err_exit("FINS/TCP header send error");
144     }
145
146
147     /* SEND FINS COMMAND FRAME*/
148     /*
149     * GENERATE MEMORY AREA READ COMMAND
150     * (READ 150 WORDS FROM DM 100)
151     */
152     fins_cmnd[0] = 0x80; /* ICF */
153     fins_cmnd[1] = 0x00; /* RSV */
154     fins_cmnd[2] = 0x02; /* GCT */
155     fins_cmnd[3] = 0x00; /* DNA */
156     fins_cmnd[4] = srv_node_no; /* DA1 *//* Ethernet Unit FINS NODE NUMBER*/
157     fins_cmnd[5] = 0x00; /* DA2 */
158     fins_cmnd[6] = 0x00; /* SNA */
159     fins_cmnd[7] = cli_node_no; /* SA1 *//* WS FINS NODE NUMBER OBTAINED
160                                                AUTOMATICALLY*/
161     fins_cmnd[8] = 0x00; /* SA2 */
162     fins_cmnd[9] = ++sid; /* SID */
163     fins_cmnd[10] = 0x01; /* MRC */
164     fins_cmnd[11] = 0x01; /* SRC */
165     fins_cmnd[12] = 0x82; /* VARIABLE TYPE: DM*/
166     fins_cmnd[13] = 0x00; /* READ START ADDRESS: 100*/
167     fins_cmnd[14] = 0x64;
168     fins_cmnd[15] = 0x00;
169     fins_cmnd[16] = 0x00; /* WORDS READ: 150*/
170     fins_cmnd[17] = 0x96;
171     /* SEND FINS COMMAND FRAME*/
172     signal(SIGALRM,recv_fail);
173     sendlen = 18;
174     if (send(sockfd,fins_cmnd,sendlen,0) == sendlen)
175     {
176         printf("send length %d¥n",sendlen);
177     }
178     else
179     {
180         err_exit("send error");
181     }
182
183     /* RECEIVE FINS/TCP COMMAND (READ RECEIVE FUNCTIONS)*/
184     recvlen = 16;
185     if (tcp_recv(sockfd, fins_tcp_header, recvlen) == recvlen)
186     {
187         /* CONFIRM    WHETHER    FINS    FRAME    SEND    COMMAND    WAS    RECEIVED*/
188         if ((fins_tcp_header[8] != 0x00)    || (fins_tcp_header[9] != 0x00) ||
189             (fins_tcp_header[10] != 0x00) || (fins_tcp_header[11] != 0x02))
190         {
191             err_exit("FINS/TCP illegal command error");
```

```
192         }
193
194         printf("FINS/TCP header receive length %d¥n",recvlen);
195         recvlen = fins_tcp_header[6];
196         recvlen <<=8;
197         recvlen += fins_tcp_header[7];
198         recvlen -= 8; /* SUBTRACT LENGTH OF COMMAND & ERROR CODE OF FINS/TCP HEADER*/
199         printf("FINS/TCP frame receive length %d¥n",recvlen);
200     }
201     else
202     {
203         err_exit("TCP receive error");
204     }
205
206     /* RECEIVE     FINS     RESPONSE     FRAME*/
207     if (tcp_recv(sockfd, fins_resp, recvlen) == recvlen)
208     {
209         alarm(0);    /*  STOP RESPONSE MONITOR TIMER*/
210         printf("recv length %d¥n",recvlen);
211
212         if (recvlen < 14)    /* ILLEGAL RESPONSE LENGTH CHECK*/
213             err_exit("FINS length error");
214         if ((fins_cmnd[3] != fins_resp[6]) || (fins_cmnd[4] != fins_resp[7]) ||
215             (fins_cmnd[5] != fins_resp[8]) )
216         {
217             /* DESTINATION ADDRESS CHECK*/
218             err_exit("illegal source address error");
219         }
220
221         if(fins_cmnd[9] != fins_resp[9]) /* SID CHECK        */
222             err_exit("illegal SID error");
223     }
224     else
225     {
226         alarm(0);    /* STOP RESPONSE MONITOR TIMER
227         err_exit("receive error");
228     }
229
230
231     /*CLOSE SOCKET          */
232     close(sockfd);
233
234 }
235
236
237 /*
238 * TCP  RECEIVE PROCESSING (RECEIVE REPEATED UP TO THE SPECIFIED NUMBER OF BYTES)
239 */
240 int tcp_recv(sockfd, buf, len)
241 int sockfd;
242 unsigned char *buf;
243 int len;
244 {
```

```
245     int total_len = 0;
246     int recv_len;
247
248     for (;;)
249     {
250         recv_len = recv(sockfd, (char *)buf, len, 0);
251
252         if (recv_len > 0)
253         {
254             if (recv_len < (int)len)
255             {
256                 len -= recv_len;
257                 buf += recv_len;
258                 total_len += recv_len;
259             }
260             else
261             {
262                 total_len += recv_len;
263                 break;
264             }
265         }
266         else
267         {
268             err_exit("TCP receive error");
269             total_len = 0;
270             break;
271         }
272     }
273
274     return total_len;
275
276 }
277
278 /*
279 *  ERROR PROCESSING FUNCTIONS
280 */
281 err_exit(err_msg)
282 char *err_msg;
283 {
284     printf("client: %s %x¥n",err_msg,errno);
285     exit(1);
286 }
287
288 /*
289 * SIGNAL CAPTURE FUNCTIONS
290 */
291 recv_fail()
292 {
293     printf("response timeout error ¥n");
294 }
```

7-5 Maximum Transmission Delays: Writing/Reading to CPU Unit

The time for the response to be received after a remote node on the Ethernet network sends a memory area read or write command to a PLC can be calculated using the following formula.

Write Command Delay Time

Maximum transmission delay =
Transmission processing time (remote node)
+ Transmission delays
+ Reception processing time (command) (local node)
+ CPU Bus Unit service cycle (local node)
+ CPU Bus Unit service processing time (local node)
+ Transmission processing time (response) (local node)
+ Transmission delays
+ Reception processing time (remote node)

Transmission Delay

The transmission delay time depends on the baud rate set for the Ethernet Unit, as shown in the following table. (Additional delays may depending on devices, such as hubs, in the network configuration.)

Baud rate	Delay time
100Base-TX	Number of words sent × 0.0013 + 0.0118 ms
10Base-TX	Number of words sent × 0.0019 + 0.0157 ms

Receive Processing (Command)

Number of words sent × 0.003 + 0.704 ms

CPU Bus Unit Service Cycle

The processing time will be as follows, depending on the CPU processing mode settings at the CPU Unit.

CPU execution mode	Processing time considerations	
Normal Mode	CPU Unit cycle time	
Priority peripheral servicing	Ethernet Unit is given priority.	Time slice instruction execution time
	Ethernet Unit is not given priority.	CPU Unit cycle time
Parallel processing with synchronous memory access	CPU Unit cycle time	
Parallel processing with asynchronous memory access	0.2 ms + peripheral servicing time (1 ms max. of peripheral servicing time for each Special I/O Unit, CPU Bus Unit, peripheral port, RS-232C port, and Inner Board)	

For details, refer to the CPU Unit operation manual.

CPU Bus Unit Service Processing Time

The CPU Bus Unit service processing time is determined according to the CPU execution processing mode at the CPU Unit, as shown in the following table.

CPU execution mode	Processing time considerations	
Normal Mode	Set time for peripheral servicing (Default: 4% of CPU Unit cycle time)	
Priority peripheral servicing	Priority given to Ethernet Unit	Time slice peripheral servicing execution time
	Priority not given to Ethernet Unit	Set peripheral servicing time (Default: 4% of CPU Unit cycle time)

CPU execution mode	Processing time considerations
Parallel processing with synchronous memory access	Set time for peripheral servicing (Default: 4% of CPU Unit cycle time)
Parallel processing with asynchronous memory access	1 ms max.

For details, refer to the CPU Unit operation manual.

Transmission Processing (Response)

0.704 ms

Note

The actual operating environment can cause transmission delays larger than those calculated with the methods given here. Among the causes of longer delays are the following: traffic on the network, window sizes at network nodes, traffic through the Ethernet Unit (e.g., simultaneous socket servicing and FTP server communications, etc.), and the system configuration.

Read Command Delay Time

Maximum transmission delay =
Transmission processing time (remote node)
+ Transmission delays
+ Reception processing time (command) (local node)
+ CPU Bus Unit service cycle (local node)
+ CPU Bus Unit service processing time (local node)
+ Transmission processing time (response) (local node)
+ Transmission delays
+ Reception processing time (remote node)

Transmission Delay

The transmission delay time depends on the baud rate set for the Ethernet Unit, as shown in the following table. (Additional delays may depending on devices, such as hubs, in the network configuration.)

Baud rate	Delay time	
100Base-TX	Command	0.0118 ms
	Response	Number of words sent × 0.0013 + 0.0118 ms
10Base-T	Command	0.0157 ms
	Response	Number of words sent × 0.0019 + 0.0157 ms

Reception Processing (Command)

0.704 ms

CPU Bus Unit Service Cycle

The processing time will be as follows, depending on the CPU processing mode settings at the CPU Unit.

CPU execution mode	Processing time considerations	
Normal Mode	CPU Unit cycle time	
Priority peripheral servicing	Ethernet Unit is given priority.	Time slice instruction execution time
	Ethernet Unit is not given priority.	CPU Unit cycle time
Parallel processing with synchronous memory access	CPU Unit cycle time	
Parallel processing with asynchronous memory access	0.2 ms + peripheral servicing time (1 ms max. of peripheral servicing time for each Special I/O Unit, CPU Bus Unit, peripheral port, RS-232C port, and Inner Board)	

For details, refer to the CPU Unit operation manual.

CPU Bus Unit Service Processing Time

The processing time will be as follows, depending on the CPU processing mode settings at the CPU Unit.

CPU execution mode	Processing time considerations	
Normal Mode	4% of CPU Unit cycle time	
Priority peripheral servicing	Ethernet Unit is given priority.	Time slice peripheral servicing execution time
	Ethernet Unit is not given priority.	Set peripheral servicing time (Default: 4% of CPU Unit cycle time)
Parallel processing with synchronous memory access	Set peripheral servicing time (Default: 4% of CPU Unit cycle time)	
Parallel processing with asynchronous memory access	1 ms max.	

For details, refer to the CPU Unit operation manual.

Transmission Processing (Response)

Number of words sent × 0.003 + 0.704 ms

Note

The actual operating environment can cause transmission delays larger than those calculated with the methods given here. Among the causes of longer delays are the following: traffic on the network, window sizes at network nodes, traffic through the Ethernet Unit (e.g., simultaneous socket servicing and FTP server communications, etc.), and the system configuration.

Example Calculations

The following example shows calculations for sending 256 words between two PLC nodes using SEND(090). Calculations are shown in the following table.

Conditions

CPU cycle time: 10 ms

CPU execution mode: Normal

CPU uniform peripheral servicing time: Default (4%)

Baud rate: 100Base-TX

Item	Calculation
Personal computer transmission processing time	---
Transmission delay (command)	256 × 0.0013 + 0.0118 = 0.3446 ≈ 0.3 ms
Reception processing time local node) (command)	256 × 0.003 + 0.704 = 1.472 ≈ 1.5 ms
CPU Bus Unit service cycle (local node)	10 ms
CPU Bus Unit service processing time (local node)	0.4 ms
Transmission processing time (local node) (response)	0.704 ms ≈ 0.7 ms
Transmission delay (command)	0.0118 ms ≈ 0.1 ms
Personal computer reception processing time	---
Maximum transmission delay time	Personal computer transmission/reception processing time + 0.3 +1.5 + 10 + 0.4 + 0.7 + 0.1 = personal computer transmission/reception processing time + 13.0 ms

Appendix A

Ethernet Network Parameters

Parameter	Value	Description
TCP send buffer	4,096 bytes	Maximum capacity of the TCP send buffer
TCP receive buffer	4,096 bytes	Maximum capacity of the TCP receive buffer
UDP send buffer	9,000 bytes	Maximum capacity of the UDP send buffer
UDP receive buffer	9,016 bytes	Maximum capacity of the UDP receive buffer
RAW send buffer	2,048 bytes	Maximum capacity of the RAW send buffer
RAW receive buffer	2,048 bytes	Maximum capacity of the RAW receive buffer
FINS receive buffer	16,383 bytes	Maximum capacity of the FINS receive buffer
Hold timer	75 s	The hold timer is used for active open processing of TCP sockets. A ETIMEDOUT error will occur if connection is not completed within 75 s.
Resend timer	Initial value: 1 s Maximum value: 64 s	The resend timer is used to monitor completion of reception of arrival confirmations when transferring data via socket services, including FTP server and mail transfer TCP sockets. If the timer setting is exceeded before arrival confirmation is received, data is resent. Resends are performed from the first timeout (1 s) through the 12th timeout (64 s). A ETIMEDOUT error will occur after the 12th timeout.
Continue timer	Initial value: 5 s Maximum value: 60 s	The continue timer starts if preparations have been completed to send data but the send window is too small (either 0 or too small) to send the data and the remote node has not requested that communications be restarted. Confirmation of the window size is requested from the remote node when the continue timer times out. The initial value of the timer is 5 s and confirmation processing will continue consecutively with increasingly longer times until the maximum time of 60 s is reached.
2MSL timer	60 s	The 2MSL timer starts at the TCP socket that first closes the socket and will run for 60 s in the TIME_WAIT status.
IP reassemble timer	30 s	A fragmented IP packet is discarded if it cannot be reassembled within 30 seconds.
ARP timer	20 min/3 min	If a complete ARP table entry (with an Ethernet address) is not referred to for 20 minutes, it is removed from the table. An incomplete ARP table entry (no response yet returned to the ARP request) is removed from the table after 3 minutes.
Window size	4,096 bytes	The initial value of the maximum capacity used to control the convergence of TCP sockets. Actually, the node negotiates with the remote node and uses the smaller of the values for the two nodes. The window size will fluctuate with the available space in the TCP reception buffers of the remote node when processing communications.
Fragment size	1,500 bytes	UDP data is separated into 1,472-byte fragments. The remaining 28 bytes are for the IP header.
Segment size	1,024 bytes	TCP data is separated into 1,024-byte units, unless the segments are different, in which case it will be separated into 536-byte units.
TTL (Time to Live)	30	Decremented each time an IP router is passed.

Appendix B

Buffer Configuration

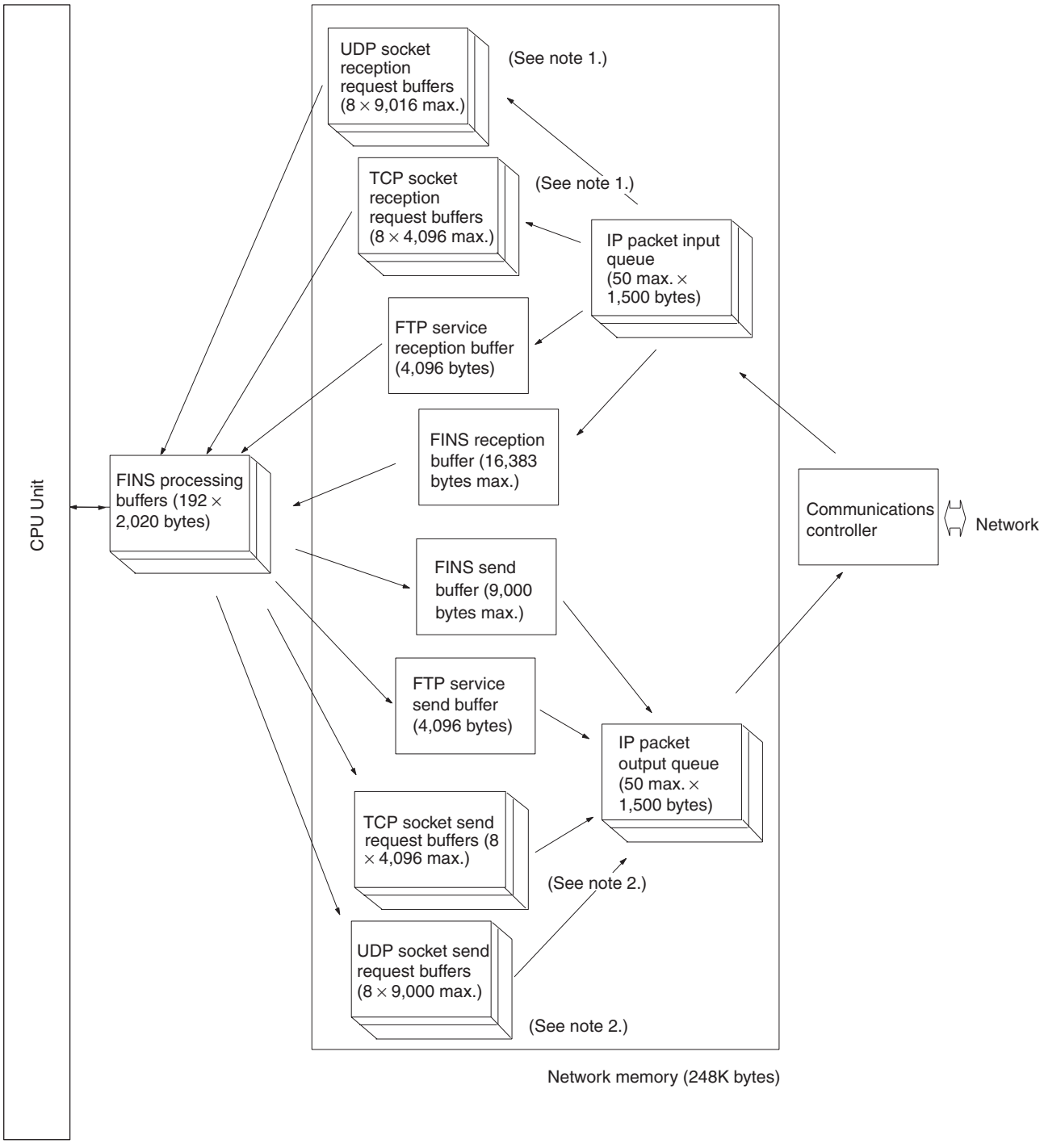

Network Memory

Most of the buffers used for communications servicing by the Ethernet Unit are administered in a buffer configuration called network memory. Network memory consists of 196K bytes of memory divided into short and long buffers. The use of short and long buffers is determined by the status of the various services when the Ethernet Unit is running. The capacity of all buffers cannot be used due to limits in the mounted memory capacity. The status of the short and long buffers can be accessed by execution the FINS command MEMORY STATUS READ (2763).

Note 1. The status of UDP and TCP socket reception request buffers can be accessed by executing the FINS command SOCKET STATUS READ (2764).

The status of UDP and TCP socket send request buffers can be accessed by executing the FINS command SOCKET STATUS READ (2764).

Appendix C

TCP Status Transitions

The TCP socket status can be confirmed using the socket status data returned for the FINS command SOCKET STATUS READ (2764).

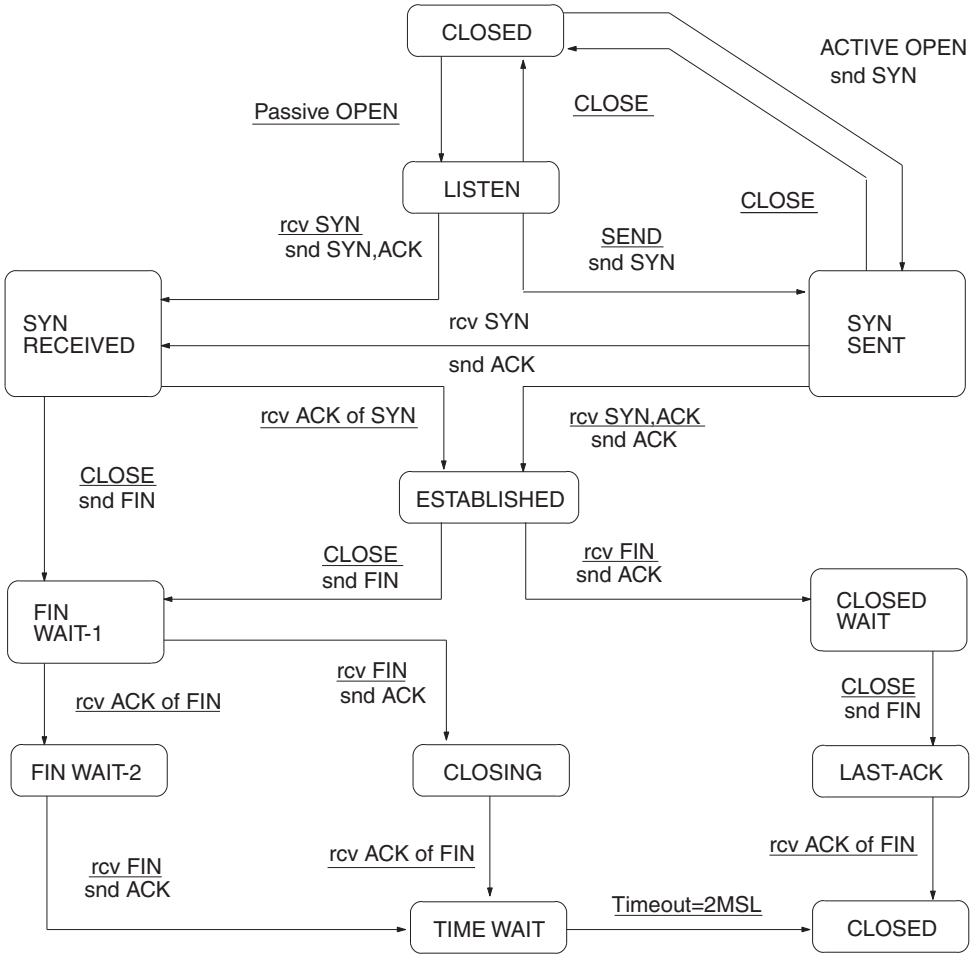

Status	Meaning
CLOSED	Connection closed.
LISTEN	Waiting for connection.
SYN SENT	SYN sent in active status.
SYN RECEIVED	SYN received and sent.
ESTABLISHED	Already established.
CLOSE WAIT	FIN received and waiting for completion.
FIN WAIT 1	Completed and FIN sent.
CLOSING	Completed and exchanged FIN. Awaiting ACK.
LAST ACK	FIN sent and completed. Awaiting ACK.
FIN WAIT 2	Completed and ACK received. Awaiting FIN.
TIME WAIT	After closing, pauses twice the maximum segment life (2MSL).

Appendix D

ASCII Characters

Bits 1 to 4		Bits 5 to 7							
Binary		0000	0001	0010	0011	0100	0101	0110	0111
	Hex	0	1	2	3	4	5	6	7
0000	0	NUL	DLE	Space	0	@	P		p
0001	1	SOH	DC1	!	1	A	Q	a	q
0010	2	STX	DC2	”	2	B	R	b	r
0011	3	ETX	DC3	#	3	C	S	c	s
0100	4	EOT	DC4	$	4	D	T	d	t
0101	5	ENQ	NAK	%	5	E	U	e	u
0110	6	ACK	SYN	&	6	F	V	f	v
0111	7	BEL	ETB	’	7	G	W	g	w
1000	8	BS	CAN	(	8	H	X	h	x
1001	9	HT	EM	)	9	I	Y	i	y
1010	A	LF	SUB	*	:	J	Z	j	z
1011	B	VT	ESC	+	;	K	[	k	{
1100	C	FF	FS	,	<	L	\	l	|
1101	D	CR	GS	-	=	M	]	m	}
1110	E	SO	RS	.	>	N	^	n	~
1111	F	SI	US	/	?	O	_	o	DEL

Appendix E
Maintenance

The Ethernet Unit makes up part of a network. Repair a defective Ethernet Unit as soon as possible as it can have a negative effect on the entire network. We recommend that customers keep one or more spare Ethernet Units to allow immediate recovery of the network.

Replacing an Ethernet Unit

Observe the following precautions when replacing the Ethernet Unit.

- Always turn OFF the power supply before replacing the Ethernet Unit.
- Check that the spare Ethernet Unit is operating normally before replacing a defective Unit with it.
- When returning a defective Unit for repairs, provide as much written information as possible on the symptoms of the problem.
- If a problem occurs with poor contacts, wipe the contacts with a clean cloth soaked with industrial alcohol. Carefully remove any lint remaining on the contacts before replacing the Unit.

Settings after Replacing an Ethernet Unit

After replacing an Ethernet Unit, set the following to the same settings as were used on the previous Unit.

- Unit number
- Node address

Settings After Replacing a CPU

The EEPROM in the PLC's CPU holds the information listed below. This information must be stored in any new CPU used to replace a defective one.

- Routing tables
- System Setup for the Ethernet Unit

Appendix F
Inspections

Carry out regular inspections to ensure the Ethernet Unit is functioning perfectly.

Items

Most of the parts that make up an Ethernet Unit are semiconductor components. None of the parts in the Unit will wear out after a specific lifetime, but some parts may deteriorate due to extreme operating condition. Therefore, it is important to inspect the Unit regularly.

Inspection Interval

Normally inspect once or twice per year. Choose the inspection period according to the severity of the operating conditions.

Inspection Items

Correct any of the items in the table below not conforming to the specified standard.

Item	Details	Standard
Environment	Temperature around Unit	0 to 55°C
	Humidity around Unit	10% to 90% (with no condensation)
	Accumulated dust	No accumulated dust
Mounting	Ethernet Unit firmly attached	No looseness
	Transceiver cable connector fully pushed in	No looseness
	Condition of transceiver cable	No visible abnormality
	Twisted-pair cable connector fully pushed in	No looseness
	Condition of twisted-pair cable	No visible abnormality

Tools Required for Inspection

The following tools are needed to inspect the Ethernet Unit:

Standard Tools

- Flat-blade and Phillips screwdrivers
- Tester or digital voltmeter
- Industrial alcohol and a clean cloth

Tools Required Under Special Circumstances

- Synchroscope
- Pen oscilloscope
- Thermometer and hygrometer

Index

Numerics

100Base-TX
  transmission delays, 193
10Base-T
  transmission delays, 193

A

Accessing Memory/Receiving Mail Flag, 60
Accessing Memory/Sending Mail Flag, 26
Account Name field, 6, 19, 39
Adjust Time field, 92, 93
applications
  examples
    mail send function, 30
    using UNIX, 86
  precautions, xxiv
ASCII characters, 201
Attached file name field, 20, 23
Attached file type field, 23
attached files
  extensions
    CSV, 15, 61
    IOM, 15, 60
    TXT, 15, 61
  file data, 15
  I/O memory data, 15
  mail send function, 17
  transfer times, 28, 62
Auto Adjust Time field, 92, 93
Auto Adjust Time Tab, 92, 93
automatic clock adjustment, 2, 3
  Automatic Clock Adjustment Switch, 94
  errors
    error codes, 95
    error log, 95
    SNTP, 94
    troubleshooting with indicators, 94
  overview, 90
  procedure, 91
  requirements, 90
  settings, 92
  specifications, 91

B

baud rate
  transmission delays, 193
Bit value change field, 24
bits
  Automatic Clock Adjustment Switch, 94
  dedicated control bits, 103
  Socket Service Request Switches, 119
    Close Request Switch, 120
    Send Request Switch, 119
    TCP Active Open Request Switch, 119
    TCP Passive Open Request Switch, 119
    UDP Open Request Switch, 119
buffers, 195
  configuration, 197
bye command, 68, 73, 77

C

cd command, 68, 73, 75
cdup command, 68, 73
ChangeMode command, 2, 35
  command/response format, 53
ChangeMode field, 41
CJ1W-ETN11
  mail send function comparison, 11
clock
  automatic adjustment, 2, 3
close command, 68, 73, 77
Close Request Switch, 120
CMND(490) instruction, 99
  requesting socket services, 105, 135
commands
  FTP commands, 73
  remote mail commands, 42
communications cables, xxv
CPU Bus Unit Setup
  transferring settings, 32
CPU Bus Units
  precautions, xxvi
CPU condition field, 24
crimp terminals, xxv
CS1W-ETN01/11
  mail send function comparison, 11
CSV field, 41
CSV format, 15, 27, 61
Custom 1 to 3 field, 41
CX-Programmer
  Unit Setup, 30

D

delete command, 68, 73, 77
dir command, 68, 73, 74
DNS communications, 3
DNS server, 31
  automatic clock adjustment
    errors, 94
DNS Tab, 7, 19, 39, 92
  initial settings, 31

E

EC Directives, xxvi
electromagnetic fields, xxiv
EM File Memory, 80
  using, 80
E-mail
  attached files, 16, 17, 35
    receiving, 41
  body, 16, 17, 36
  command line, 37
  compression, 17, 37
  data sent, 22
  decoding, 37
  destination e-mail-address, 17
  encoding, 17
  encryption, 17, 37
  errors
    troubleshooting, 28
  Ethernet Unit information, 13
  header information, 13
  protection, 40
  protocols, 17
  reception timing, 35
  remote mail commands, 35
  responses, 37
  send conditions, 17
  send status, 17
  specifications, 17
  status information, 15
  subject line, 17, 36
  triggers, 13, 17, 18, 23
  user-set information, 14
EMC Directives, xxvi
EMI Standard, xxvi
EMS Standard, xxvi
encoding
  mail send function, 17
encryption, 17, 37
ERC indicator
  error display, 29
ERH indicator
  error display, 29
error log
  error codes, 29
ErrorLogClear command, 36
  command/response format, 55
ErrorLogClear field, 41
ErrorLogRead command, 2, 36
  command/response format, 54
ErrorLogRead field, 41
errors
  automatic clock adjustment, 94
  error codes
    mail send function, 29
  error messages, 78
  mail receive function, 63
  mail send function, 28
  troubleshooting
    using indicators, 29
Ethernet communications
  network parameters, 195
  parameters, 195
Ethernet Units
  communications services, 2
  replacing, 203
  resetting, 203
ETN condition field, 24

F

FALS instruction, xxiii
file data, 16
file extensions
  CSV, 15
  IOM, 15
  TXT, 15
FileDelete command, 36
  command/response format, 45
FileDelete field, 41
FileList command, 2, 36
  command/response format, 46
FileList field, 41
FileRead command, 2, 36
  command/response format, 44
FileRead field, 41

FileWrite command, 2, 36
  command/response format, 43
FileWrite field, 41
FINS communications, 2, 4
  address conversion, 161
  application layers, 160
  commands
    CONNECTION CONFIRMATION, 180
    FINS FRAME SEND, 179
    FINS FRAME SEND ERROR NOTIFICATION, 179
    FINS NODE ADDRESS DATA SEND (CLIENT TO SERVER), 177
    FINS NODE ADDRESS DATA SEND (SERVER TO CLIENT), 177
  FINS frames, 162
    format, 162
    headers, 162
  FINS/TCP method, 160, 171
    connection sequences, 181
    connection status, 173
    FINS node address auto allocation, 174
    frame format, 172
    headers, 177
    procedure, 173, 176
    programming example, 185
    sending commands, 184
    TCP port number, 172
  FINS/UDP method, 163
    frame format, 164
    procedure, 165
    programming example, 167
    sending commands, 166
    UDP port numbers, 164
  message length, 161
  port numbers, 161
  protection, 161
  protocols, 161
  specifications, 161
  using FINS/TCP, 161
  using FINS/UDP, 161
FINS node addresses
  automatic allocation, 174
    connection sequence, 182
FinsSend command, 2, 36
  command/response format, 59
FinsSend field, 42
flags
  Accessing Memory/Receiving Mail Flag, 60
  Accessing Memory/Sending Mail Flag, 26
  FTP Status Flag, 79
  Port Enabled Flag, 138
FREAD instruction, 27, 60
FTP communications, 4
FTP indicator, 79
FTP server, 2, 3
  application examples, 72
    using UNIX, 86
  closing, 77
  commands, 73
    bye, 77
    cd, 75
    close, 77
    delete, 77
    dir, 74
    get, 76
    ls, 74
    mdelete, 77
    mget, 76
    mput, 76
    open, 73
    put, 76
    pwd, 75
    quitting, 77
    type, 76
    user, 74
  connecting, 69, 73
  data type, 76
  displaying current directory, 75
  file types, 69
  protection, 68
  protocol, 68
  quitting, 77
  See also Memory Cards
  specifications, 68
  status, 79
FTP Status Flag, 79
FWRIT instruction, 27, 60

G

get command, 68, 73, 76, 85
Get the time information from the SNTP server field, 92, 93

H

HOST indicator
  error display, 29
Host name field, 5, 6, 19, 39, 92, 93

I

I/O memory data, 15
  CSV format, 61
  IOM format, 60
  TXT format, 61
I/O tables
  creating, 30
ICF, 162
inspections, 205
installation
  location, xxiv
Interval time field, 20, 24
IO memory data field, 20, 23
IOM field, 41
IOM format, 15, 26
IOMRead command, 2, 35
  command/response format, 51
IOMRead field, 41
IOMWrite command, 2, 35
  command/response format, 49
IOMWrite field, 41
IP Address field, 5, 7, 19, 39, 92, 93
IP communications
  IP addresses
    remote devices, 117
  programming examples, 127, 131, 140, 148

L

LNK indicator
  error display, 29
Local mail address field, 4, 19, 39
locking devices
  precautions, xxv
Login field, 71
Low Voltage Directive, xxvi
ls command, 68, 73, 74

M

Mail address 1 field, 19, 21
Mail address 2 field, 19, 21
Mail address field, 20, 22, 39, 40
Mail Address Tab, 19, 21, 31
Mail password field, 6, 19, 39
mail receive function, 2
  access times for CPU Units, 62
  advantages, 34
  attached files, 35, 37
    settings, 40
    transfer times, 62
  command parameters, 35
  compression, 37
  configuration, 34
  decoding, 37
  E-mail body, 36
  encryption, 37
  errors, 63
  initial settings, 65
  introduction, 34
  procedure, 38
  protection, 37, 40
  protocols, 36
  reception timing, 35
  remote mail commands, 35
    response codes, 59
  settings, 39
    DNS Tab, 39
    POP Tab, 39
    Receive Mail Tab, 39
    SMTP Tab, 39
  SMTP settings, 4
  specifications, 36
  status, 60
mail send function, 2, 3
  access times for CPU Units, 28
  advantages, 10
  application example, 30
  attached files, 10, 15, 17, 23
    transfer times, 28
  body, 17
  comparison with earlier versions, 11
  compatibility, 11
  compression, 17
  conditions, 11, 22
  data sent, 22
  destination e-mail address, 17
  E-mail contents, 12
  E-mail header, 13
  encryption, 17
  error log, 15
    error codes, 29
  errors, 28
    troubleshooting with indicators, 29
  Ethernet Unit information, 14
  procedure, 18
  protocols, 17
  send conditions, 17

send timing, 11
sending method (encoding), 17
settings, 19
DNS Tab, 19
Mail Address Tab, 19
POP Tab, 19
SMTP Tab, 19
SMTP settings, 4
status, 17, 25
Send Mail Status 1, 25
Send Mail Status 2, 25
status information, 15
subject, 17
triggers, 13, 17, 18, 23
user-set information, 14
Mail Send Switch, 26
MailLogClear command, 36
command/response format, 57
MailLogClear field, 42
MailLogRead command, 36
command/response format, 56
MailLogRead field, 41
maintenance, 203
inspections, 205
mdelete command, 68, 73, 77
Memory Cards, 69, 80
deleting files, 77
displaying directories, 74
See also FTP server
sending stored files, 16
transferring files from host, 76
transferring files to host, 76
mget command, 68, 73, 76
mkdir command, 68, 73
mput command, 68, 73, 76
MRES, 138

N

networks
network memory, 198
network parameters, 195
noise, xxiv

O

OBJ field, 41
online editing, xxiii
open command, 68, 73
operating environment
precautions, xxiv

P

PARAMBackup command, 2, 36
command/response format, 48
PARAMBackup field, 41
Password field, 71
Periodic timer field, 24
POP communications, 3
POP Tab, 5, 39
initial settings, 65
POP3 communications, 36
POP3 server, 7
Port Enabled Flag, 138
Port No. field, 5, 7, 19, 39, 71, 92, 93
port numbers
sockets, 99
TCP port, 117
remote device, 118
UDP port, 117
remote device, 118
power supply, xxiv
precautions, xxv
precautions, xxi
applications, xxiv
general, xxii
inspections, 205
operating environment, xxiv
power supply, xxv
replacing Units, 203
safety, xxii
Socket Service Request Switches, 155
socket services, 154
TCP communications, 102
UDP communications, 102
Protect using mail address field, 40
protocols
DNS, 3
FINS, 4
FTP, 4
FTP server, 68
POP, 3
POP3, 36
SMTP, 3, 17, 37
SNTP, 4
table, 3

TCP/IP, 4
UDP/IP, 4
put command, 68, 73, 76, 85
pwd command, 68, 73, 75

Q

quit command, 68, 73, 77

R

radioactivity, xxiv
READ DATA FILE (FREAD) instruction, 27, 60
Receive file with specified extension only field, 39, 41
Receive Mail Tab, 39, 40
Receive Request Switch, 119
Receive specified commands only field, 39, 41
remote mail commands
accessing CPU Unit's I/O memory area, 35
changing the CPU Unit's operating mode, 35
command/response format, 42
file memory operations, 36
mail receive function
initial settings, 66
performing an e-mail send/receive test, 36
reading/clearing the e-mail log, 36
reading/clearing the error log, 36
response codes, 59
sending, 66
sending FINS commands, 36
rename command, 68, 73
replacing Units
precautions, xxv
response codes
remote mail commands, 59
Results Storage Area, 138
Socket Service Request Switches, 120
Results Storage Area, 138
Retry timer field, 7, 19, 39, 92, 93
rmdir command, 68, 73
routing tables
precautions, xxvi
RUN indicator
error display, 29

S

safety precautions, xxii
Send Error Log information field, 20, 23
Send file data or I/O memory data field, 23
Send Mail Status words, 25
Send Mail Tab, 20, 21, 31
Send mail upon trigger field, 22
Send Request Switch, 119
Send status information field, 20, 23
Send user data field, 20, 22
Server access interval time field, 6, 19, 39
Server specification type field, 4, 6, 19, 39, 92, 93
Setup Tab, 71
short-circuits
precautions, xxv
SMTP communications, 3, 37
SMTP server, 7, 30
SMTP Tab, 4, 19, 39
initial settings, 30
SNTP communications, 4
SNTP server, 2, 7
automatic clock adjustment
errors, 94
obtaining clock information, 90
socket services, 2, 3
applications, 135
CIO Area allocations, 110
functions, 103
parameters, 113
precautions, 154
Socket Service Parameter Area, 104, 113
Socket Service Request Switches, 103, 119
application procedure, 113
precautions, 155
Socket Status Area, 114
TCP communications, 105
parameters, 116
TCP sockets
status, 110
timing charts, 125, 138
UDP communications, 105
parameters, 116
UDP sockets
status, 110
using CMND(490) instruction, 103, 105, 135
using Socket Service Request Switches, 104
SOCKET STATUS READ(2764), 199
sockets
opening, 100
overview, 99
port numbers, 99

TCP
status, 199
TCP sockets, 184
number, 117
status, 199
UDP socket
number, 117
UDP sockets, 166
Software switch field, 24
specifications
FTP server, 68
mail receive function, 36
mail send function, 17
SRES, 138
static electricity, xxiv
precautions, xxv
STD field, 41
switches
Socket Service Request Switches, 119

T

TCP Active Open Request Switch, 119
TCP communications
comparison with UDP, 100
data fragmentation, 102
precautions, 102
programming example, 127, 140
socket services
parameters, 116
sockets, 100
status, 199
status transitions, 199
TCP Passive Open Request Switch, 119
terminal blocks, xxiii
Test command, 36
command/response format, 58
Test field, 42
timers, 195
timing
socket communications, 138
socket services, 138
transmission
delays, 192
Trigger No. field, 22
Trigger type field, 20
triggers, 13, 17, 18, 23
conditions, 13
TXT field, 41
TXT format, 15, 27, 61
type command, 68, 73, 76

U

UDP communications
comparison with TCP, 100
data fragmentation, 102
precautions, 102
programming example, 131, 148
socket services
parameters, 116
UDP Open Request Switch, 119
UDP/IP communications, 4
UMBackup command, 2, 36
command/response format, 47
UMBackup field, 41
UNIX
application examples, 86
socket port numbers, 99
Use POP before SMTP field, 5, 19, 39
user command, 68, 73, 74
user name
specifying, 74
User-defined mail address field, 22

W

Word value change field, 24
WRITE DATA FILE (FWRIT) instruction, 27, 60

Revision History

A manual revision code appears as a suffix to the catalog number on the front cover of the manual.

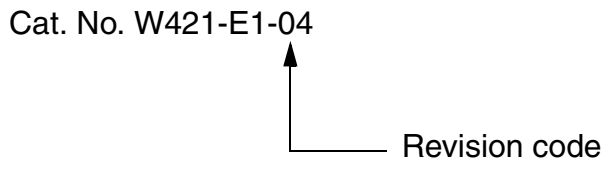

The following table outlines the changes made to the manual during each revision. Page numbers refer to the previous version.

Revision code	Date	Revised content
1	July 2003	Original production
02	March 2004	The following revisions were made. **Page xiv:** Added information on unit versions. **Page 91:** Corrected and changed information in tables and procedure. **Page 150:** Corrected “114 (0072_{hex})” to “116 (0074_{hex})” and “14 bytes” to “16 bytes” for D00020. **Page 173:** Added information on FINS/TCP connections. **Page 177:** Added information on FINS/TCP connections. **Page 179:** Added information on FINS/TCP connections. **Page 199:** Added table on TCP status transitions.
03	November 2005	**Page v:** Information on general precautions notation added. **Page xv:** Information on liability and warranty added.
04	April 2009	Added information for unit version 1.5. Corrected notation.

OMRON Corporation
Industrial Automation Company
Control Devices Division H.Q.
Automation & Drive Division
Automation Department 1
Shiokoji Horikawa, Shimogyo-ku,
Kyoto, 600-8530 Japan
Tel: (81) 75-344-7084/Fax: (81) 75-344-7149

Regional Headquarters
OMRON EUROPE B.V.
Wegalaan 67-69-2132 JD Hoofddorp
The Netherlands
Tel: (31)2356-81-300/Fax: (31)2356-81-388

OMRON ELECTRONICS LLC
One Commerce Drive Schaumburg,
IL 60173-5302 U.S.A.
Tel: (1) 847-843-7900/Fax: (1) 847-843-7787

OMRON ASIA PACIFIC PTE. LTD.
No. 438A Alexandra Road # 05-05/08 (Lobby 2),
Alexandra Technopark, Singapore 119967
Tel: (65) 6835-3011/Fax: (65) 6835-2711

OMRON (CHINA) CO., LTD.
Room 2211, Bank of China Tower,
200 Yin Cheng Zhong Road,
PuDong New Area, Shanghai, 200120, China
Tel: (86) 21-5037-2222/Fax: (86) 21-5037-2200

OMRON Industrial Automation Global: **www.ia.omron.com**

Authorized Distributor:

© OMRON Corporation 2003 All Rights Reserved.
In the interest of product improvement,
specifications are subject to change without notice.

Printed in Japan
Cat. No. W421-E1-04 0409