Cat. No. W304-E1-05

生産終了
DISCONTINUED

SYSMAC

C200HW-COM01
C200HW-COM02-V1 to C200HW-COM06-EV1

Communications Boards

OPERATION MANUAL

OMRON

C200HW-COM01
C200HW-COM02-V1 to C200HW-COM06-EV1
Communications Boards

Operation Manual

Revised November 2003

Notice:

OMRON products are manufactured for use according to proper procedures by a qualified operator and only for the purposes described in this manual.

The following conventions are used to indicate and classify precautions in this manual. Always heed the information provided with them. Failure to heed precautions can result in injury to people or damage to property.

⚠ DANGER Indicates an imminently hazardous situation which, if not avoided, will result in death or serious injury.

⚠ WARNING Indicates a potentially hazardous situation which, if not avoided, could result in death or serious injury.

⚠ Caution Indicates a potentially hazardous situation which, if not avoided, may result in minor or moderate injury, or property damage.

OMRON Product References

All OMRON products are capitalized in this manual. The word “Unit” is also capitalized when it refers to an OMRON product, regardless of whether or not it appears in the proper name of the product.

The abbreviation “Ch,” which appears in some displays and on some OMRON products, often means “word” and is abbreviated “Wd” in documentation in this sense.

The abbreviation “PC” means Programmable Controller and is not used as an abbreviation for anything else.

Visual Aids

The following headings appear in the left column of the manual to help you locate different types of information.

Note Indicates information of particular interest for efficient and convenient operation of the product.

1, 2, 3... 1. Indicates lists of one sort or another, such as procedures, checklists, etc.

© OMRON, 1996

All rights reserved. No part of this publication may be reproduced, stored in a retrieval system, or transmitted, in any form, or by any means, mechanical, electronic, photocopying, recording, or otherwise, without the prior written permission of OMRON.

No patent liability is assumed with respect to the use of the information contained herein. Moreover, because OMRON is constantly striving to improve its high-quality products, the information contained in this manual is subject to change without notice. Every precaution has been taken in the preparation of this manual. Nevertheless, OMRON assumes no responsibility for errors or omissions. Neither is any liability assumed for damages resulting from the use of the information contained in this publication.

TABLE OF CONTENTS

PRECAUTIONS xi

1 Intended Audience xii
2 General Precautions xii
3 Safety Precautions xii
4 Operating Environment Precautions xiii
5 Application Precautions xiii

SECTION 1
Handling Communications Boards 1

1-1 Functions 2
1-2 Hardware Connections 14
1-3 PC Setup 16
1-4 SR Words and Bits 19

SECTION 2
Protocol Macros 23

2-1 Outline 24
2-2 Protocol Support Software 34
2-3 Using the System Protocol Macros 38
2-4 Troubleshooting 55

Appendices: System Protocols

A E5□K Digital Controller Read Protocol 59
B E5□K Digital Controller Write Protocol 77
C E5ZE Temperature Controller Read Protocol 93
D E5ZE Temperature Controller Write Protocol 115
E E5□J Temperature Controller Protocol 135
F ES100□ Digital Controller Protocol 149
G K3T□ Intelligent Signal Processor Protocol 191
H V500/V520 Bar Code Reader Protocol 213
I 3Z4L Laser Micrometer Protocol 225
J Visual Inspection System Protocol 257
K V600/V620 ID Controller Protocol 275
L Hayes Modem AT Command Protocol 311

Index 319

Revision History 325

About this Manual:

This manual describes the installation and operation of the C200HW-COM01, C200HW-COM02-V1, C200HW-COM03-V1, C200HW-COM04-EV1, C200HW-COM05-EV1, and C200HW-COM06-EV1 Communications Boards for the C200HX/C200HG/C200HE Programmable Controllers and includes the sections described below. The manual is also written so that it can be used for the previous versions of these Communications Boards even though some of the protocol macro functionality is not supported.

When using the Communications Boards, information in the following manuals will also be required. (Catalog number suffixes have been omitted. Please be sure you have the most recent version of your manual for your area. Contact your OMRON representative for more information.)

Manual	Content	Cat. No.
C200HW-ZW3PC1 Protocol Support Software Operation Manual	Information on using the Software to create protocol macros and information on the system protocol macros.	W305
SYSMAC WS01-PSTF1-E Protocol Support Tool SYSMAC-PST Operation Manual	Information on SYSMAC-PST, a Windows-95-based software package that supports the protocol macro functionality of models C200HW-COM04(-EV1) to C200HW-COM06(-EV1).	W319
SYSMAC WS02-PSTC1-E CX-Protocol Operation Manual	Information on CX-Protocol, a Windows-95/98-based software package that supports the protocol macro functionality of models C200HW-COM04(-EV1) to C200HW-COM06(-EV1), CS1W-SCB21/41, and CS1W-SCU21.	W344
C200HX/C200HG/C200HE (-E/-ZE) Operation Manual	Information on programming and operating the PC.	W303
C200HX/C200HG/C200HE Installation Guide	Information required to install and maintain PC hardware.	W302

Please read this manual and the above related manuals carefully and be sure you understand the information provided before attempting to install and operate a Communications Board. **Be sure to read the precautions in the following section and understand the information contained before attempting to set up or operate a PC system containing a Communications Board.**

Section 1 Handling the Communications Board provides an outline of the functions of the Communications Boards, the installation method, the system configuration, and the system setup.

Section 2 Protocol Macro Function describes the protocol macro function supported by Communications Boards, and how to use the system protocol macros provided with the Protocol Support Software. Troubleshooting is also described in this section.

The ***Appendices*** provide configuration information for various OMRON products and Hayes Modems. These are as follows:

⚠ WARNING Failure to read and understand the information provided in this manual may result in personal injury or death, damage to the product, or product failure. Please read each section in its entirety and be sure you understand the information provided in the section and related sections before attempting any of the procedures or operations given.

Appendix	Contents
A	E5□K Digital Controller Reads
B	E5□K Digital Controller Writes
C	E5ZE Temperature Controller Reads
D	E5ZE Temperature Controller Writes
E	E5□J Temperature Controllers
F	ES100□ Digital Controllers
G	K3T□ Intelligent Signal Processors
H	V500/V520 Bar Code Readers
I	3Z4L Laser Micrometer
J	F200/F300/F350 Visual Inspection Systems
K	V600/620 ID Controllers
L	Hayes Modem AT Commands

Refer to the following manuals when using the built-in protocols.

Device/Manual name	Catalog No.
E5CK Digital Controller User's Manual	H78
E5ZE Multipoint Temperature Controller Operation Manual	H76
E5ZE Multipoint Temperature Controller COMMUNICATIONS MANUAL	H77
E5□J Temperature Controller Operation Manual	Z103
E5□J Electronic Temperature Controller Manual	Z103
ES100P Digital Controller User's Manual	H069
ES100X DIGITAL CONTROLLER User's Manual	H070
ES100 COMMUNICATIONS GUIDE User's Manual	H072
K3TC Intelligent Signal Processor Operation Manual	Z117
K3tC/K3TH/K3TR/K3TX Communication Output-type Intelligent Signal Processor Operation Manual	Z81
F200-C12E Specifications/Instruction Manual	Z110
F300 Visual Inspection System Menu Mode Operation Manual	Z91
F350-U001E Character Inspection Software 1 Operation Manual	Z105
F350-U003E Position Software 1 Operation Manual	Z107
V600/V620 FA ID SYSTEM Operation Manual	Z83

PRECAUTIONS

This section provides general precautions for using the Communications Boards.

The information contained in this section is important for the safe and reliable application of the Communications Boards and the PC in general. You must read this section and understand the information contained before attempting to set up or operate a PC system containing a Communications Board.

1 Intended Audience xii
2 General Precautions xii
3 Safety Precautions xii
4 Operating Environment Precautions xiii
5 Application Precautions xiii

1 Intended Audience

This manual is intended for the following personnel, who must also have knowledge of electrical systems (an electrical engineer or the equivalent).

- Personnel in charge of installing FA systems.
- Personnel in charge of designing FA systems.
- Personnel in charge of managing FA systems and facilities.

2 General Precautions

The user must operate the product according to the performance specifications described in the operation manuals.

Before using the product under conditions which are not described in the manual or applying the product to nuclear control systems, railroad systems, aviation systems, vehicles, combustion systems, medical equipment, amusement machines, safety equipment, and other systems, machines, and equipment that may have a serious influence on lives and property if used improperly, consult your OMRON representative.

Make sure that the ratings and performance characteristics of the product are sufficient for the systems, machines, and equipment, and be sure to provide the systems, machines, and equipment with double safety mechanisms.

This manual provides information for programming and operating OMRON PCs. Be sure to read this manual before attempting to use the software and keep this manual close at hand for reference during operation.

⚠ WARNING It is extremely important that a Communications Board and all related units be used for the specified purpose and under the specified conditions, especially in applications that can directly or indirectly affect human life. You must consult with your OMRON representative before applying a Communication Board to the above mentioned applications.

3 Safety Precautions

⚠ WARNING Do not attempt to take any Unit apart while the power is being supplied. Doing so may result in electric shock.

⚠ WARNING Do not touch any of the terminals or terminal blocks while the power is being supplied. Doing so may result in electric shock.

⚠ WARNING Do not attempt to disassemble, repair, or modify any Units. Any attempt to do so may result in malfunction, fire, or electric shock.

⚠ WARNING Never open the back cover of devices containing monitors, such as CRTs. High-voltage parts are contained inside. Opening the back cover may result in electric shock.

⚠ Caution When using the large-capacity C200HW-PA209R Power Supply Unit, be sure to use CPU Backplanes and Expansion I/O Backplanes with “-V1” at the end of the model number. If 8-slot or 10-slot Backplanes without “-V1” are used, deterioration and pattern disconnection on the Backplane may occur, leading to incorrect operation.

Caution When using the large-capacity C200HW-PA209R Power Supply Unit, the temperature of the Unit will increase during power supply and immediately after power supply is turned OFF. Do not touch the Unit at these times. Doing so may result in injury.

4 Operating Environment Precautions

Caution Do not operate the control system in the following locations:

- Locations subject to direct sunlight.
- Locations subject to temperatures or humidity outside the range specified in the specifications.
- Locations subject to condensation as the result of severe changes in temperature.
- Locations subject to corrosive or flammable gases.
- Locations subject to dust (especially iron dust) or salts.
- Locations subject to exposure to water, oil, or chemicals.
- Locations subject to shock or vibration.

Caution Take appropriate and sufficient countermeasures when installing systems in the following locations:

- Locations subject to static electricity or other forms of noise.
- Locations subject to strong electromagnetic fields.
- Locations subject to possible exposure to radioactivity.
- Locations close to power supplies.

Caution The operating environment of the PC system can have a large effect on the longevity and reliability of the system. Improper operating environments can lead to malfunction, failure, and other unforeseeable problems with the PC system. Be sure that the operating environment is within the specified conditions at installation and remains within the specified conditions during the life of the system.

5 Application Precautions

Observe the following precautions when using the PC system.

WARNING Always heed these precautions. Failure to abide by the following precautions could lead to serious or possibly fatal injury.

- Always ground the system to 100 Ω or less when installing the Units. Not connecting to a ground of 100 Ω or less may result in electric shock.
- Always turn OFF the power supply to the PC before attempting any of the following. Not turning OFF the power supply may result in malfunction or electric shock.
    - Mounting or dismounting I/O Units, CPU Units, Memory Units, or any other Units.
    - Assembling the Units.
    - Setting DIP switches or rotary switches.
    - Connecting cables or wiring the system.
    - Connecting or disconnecting the connectors.

Caution Failure to abide by the following precautions could lead to faulty operation of the PC or the system, or could damage the PC or PC Units. Always heed these precautions.

- Fail-safe measures must be taken by the customer to ensure safety in the event of incorrect, missing, or abnormal signals caused by broken signal lines, momentary power interruptions, or other causes.
- Interlock circuits, limit circuits, and similar safety measures in external circuits (i.e., not in the Programmable Controller) must be provided by the customer.
- Always use the power supply voltages specified in this manual. An incorrect voltage may result in malfunction or burning.
- Take appropriate measures to ensure that the specified power with the rated voltage and frequency is supplied. Be particularly careful in places where the power supply is unstable. An incorrect power supply may result in malfunction.
- Install external breakers and take other safety measures against short-circuiting in external wiring. Insufficient safety measures against short-circuiting may result in burning.
- Do not apply voltages to the Input Units in excess of the rated input voltage. Excess voltages may result in burning.
- Do not apply voltages or connect loads to the Output Units in excess of the maximum switching capacity. Excess voltage or loads may result in burning.
- Disconnect the functional ground terminal when performing withstand voltage tests. Not disconnecting the functional ground terminal may result in burning.
- Be sure that all the mounting screws, terminal screws, and cable connector screws are tightened to the torque specified in this manual. Incorrect tightening torque may result in malfunction.
- Check the user program for proper execution before actually running it on the Unit. Not checking the program may result in an unexpected operation.
- Do not pull on the cables or bend the cables beyond their natural limit. Doing either of these may break the cables.
- Do not place objects on top of the cables or other wiring lines. Doing so may break the cables.
- When replacing parts, be sure to confirm that the rating of a new part is correct. Not doing so may result in malfunction or burning.
- Before touching a Unit, be sure to first touch a grounded metallic object in order to discharge any static built-up. Not doing so may result in malfunction or damage.

SECTION 1
Handling Communications Boards

This section provides an outline of the functions of the Communications Boards, the installation method, the system configuration, and the system setup.

1-1 Functions 2
- 1-1-1 Features 2
- 1-1-2 Protocols 5
- 1-1-3 Communications Board Models 6
- 1-1-4 DIP Switch Settings 8
- 1-1-5 Applicable CPU Units 9
- 1-1-6 Installation 10
- 1-1-7 Indicators 11
- 1-1-8 Communications Board Specifications 12
- 1-1-9 Basic Specifications 12
- 1-1-10 Communications Specifications 12
- 1-1-11 Communications Modes and Transmission Paths 13

1-2 Hardware Connections 14

1-3 PC Setup 16

1-4 SR Words and Bits 19

1-1 Functions

The Communications Boards are optional boards that can be installed in the option slot of various C200HX/C200HG/C200HE CPU Units (CPU□5-E, CPU□4-E, CPU□3-E, CPU□2-E).

1-1-1 Features

The following features are provided by mounting a Communications Board in the option slot of a CPU Unit.

Connection to Communications Units via CPU Bus

The CPU Unit can be connected to Controller Link, SYSMAC LINK, SYSMAC NET or other Communications Units via a Bus Connection Unit.

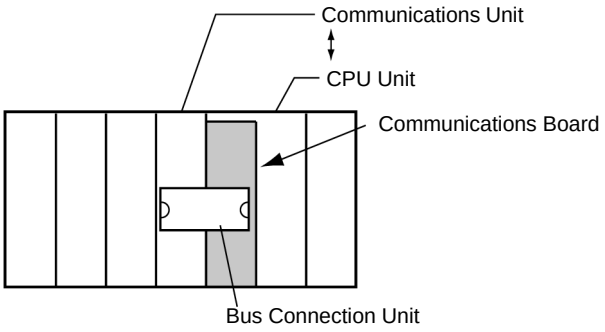

Expanded Communications

Host Link Communications: 1:N

The PC can be controlled from a host computer (personal computer or Programmable Terminal (PT)) to read/write I/O memory, control the operating mode of the PC, etc. The PC can also use the TXD instruction to send specified words in I/O memory to a host.

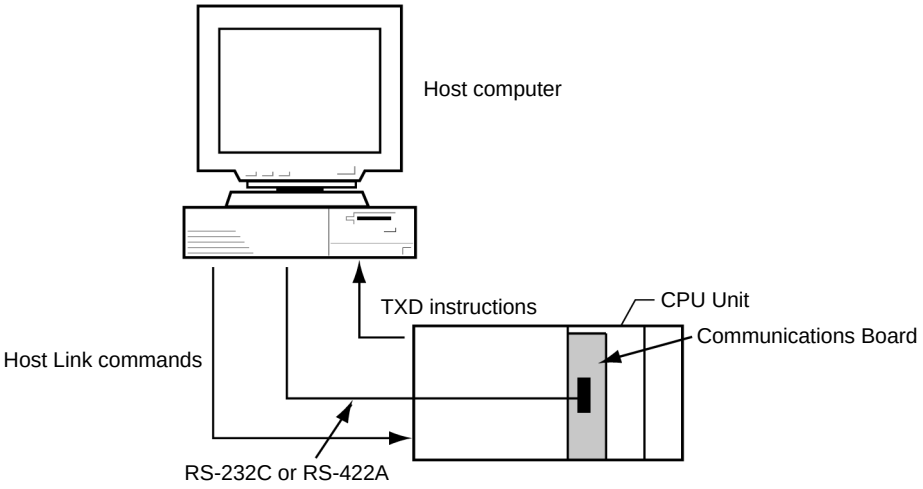

Note The RP Host Link command can be used for C200HX//HE/HE-CPU□□-ZE CPU Units only when a V1 Communications Board is mounted.

Non-procedure Communications

Simple (no-protocol) data transfers are possible using the communications port I/O instructions (TXD and RXD) to input data from a bar code reader, output data

to a printer, etc. The usage of start and end codes can be specified and RTS and CTS signals can be controlled.

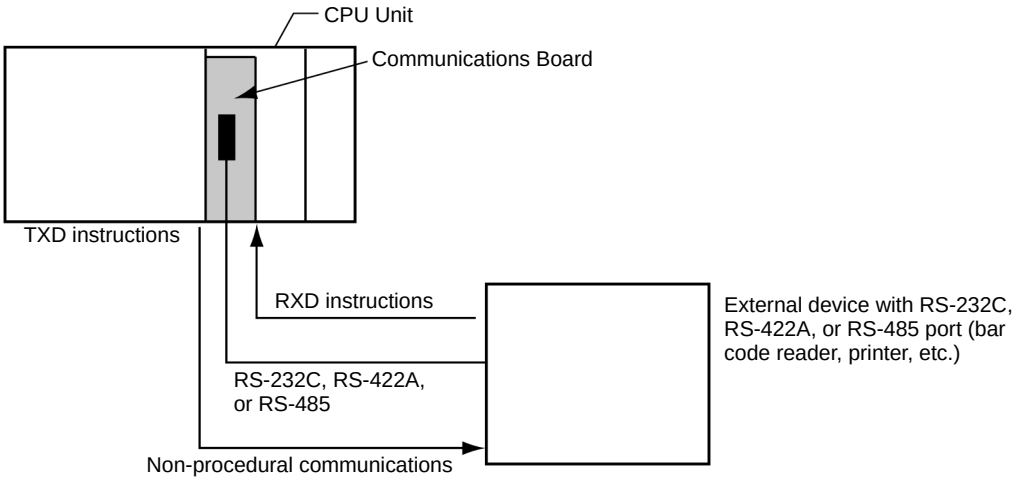

1:1 Links

Common data areas can be created in the LR Area without using PC Link Units by connecting two PCs 1:1 via the RS-232C port.

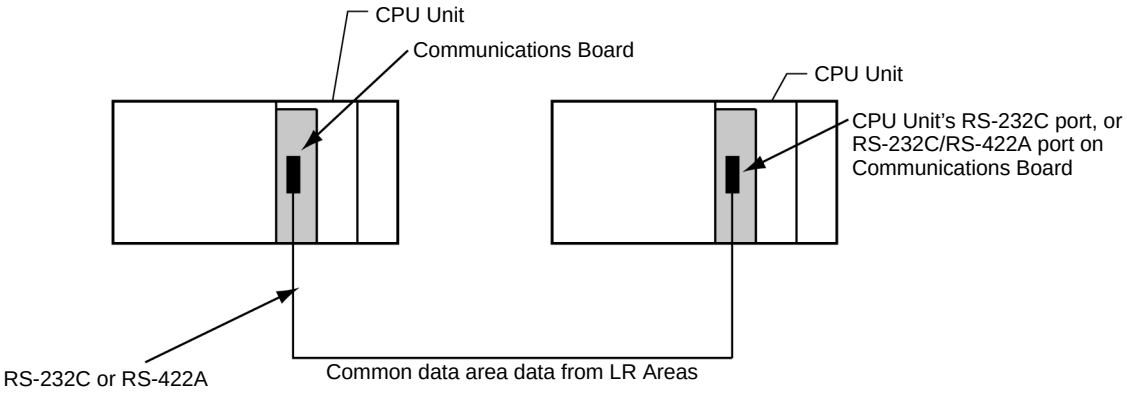

NT Links: 1:1 or 1:N

A PC can be connected to one or more PTs (Programmable Terminals) via an RS-232C port to enable data transfer via NT Link commands.

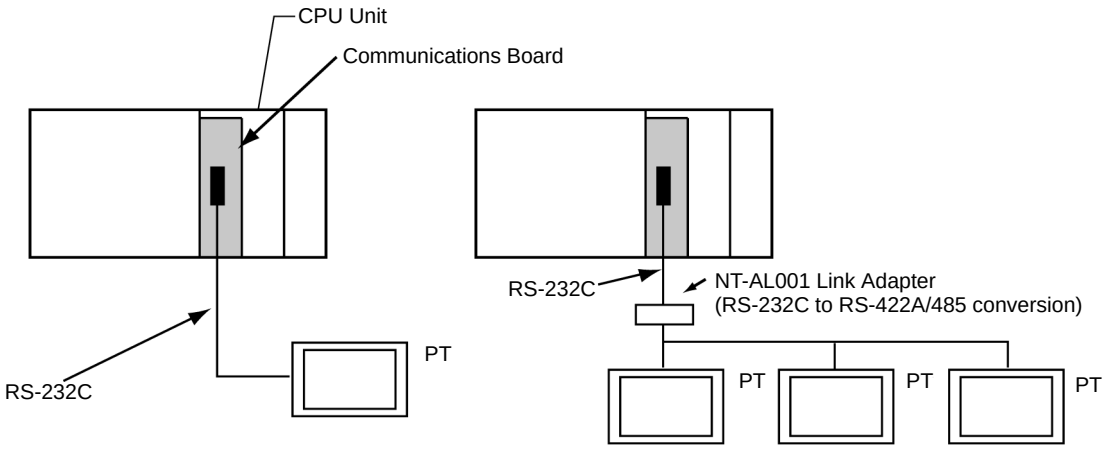

Protocol Macros

Data transfer procedures called protocols can be easily created using the Protocol Support Software (sold separately). Procedures can be designed to match

the communications specifications of the external devices that are being communicated with (half duplex or start-stop sync). The protocols that are created are loaded to the Communications Board to enable data transfer with the external devices simply by executing the PMCR instruction from the PC. There are also many system protocols provided with the Communications Boards and Protocol Support Software to enable communications with OMRON Temperature Controllers, Panel Meters, Intelligent Signal Processors, Bar Code Readers, Modems, etc. The system protocols can also be modified for other applications according to user needs.

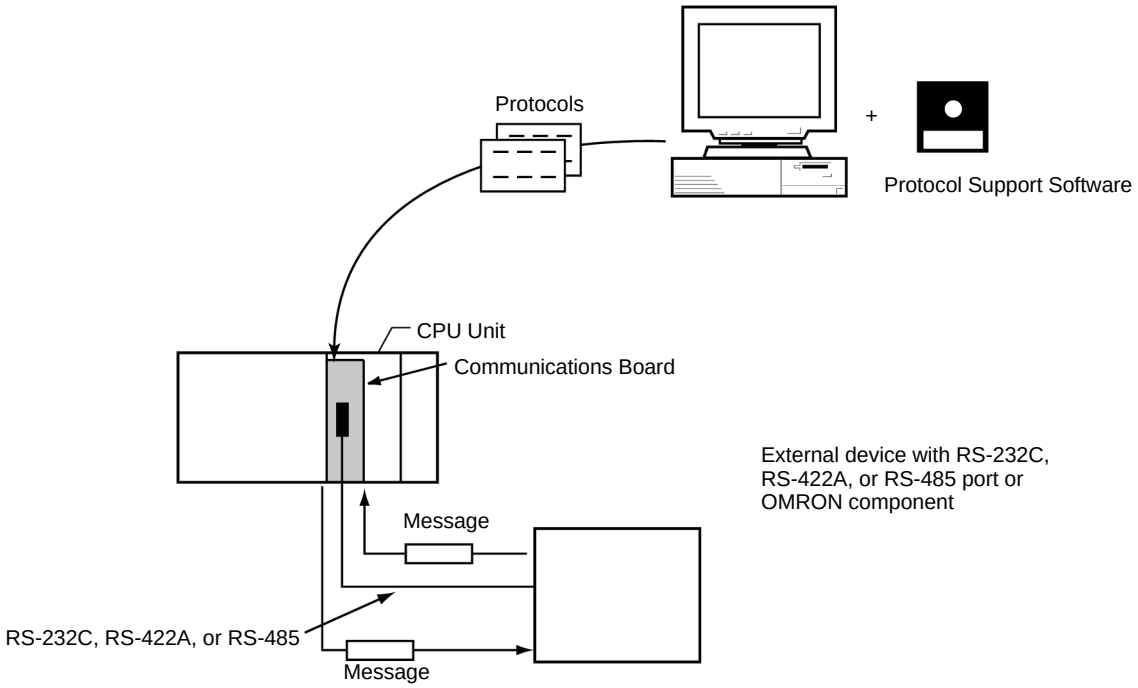

Note The following protocol macro functionality has been added to the V1 Communications Boards. The following are possible only for the C200HW-COM□□-EV1 Communications Boards.

- SUM2 (SUM of two's complement) and CRC-16 can be used for error checking.
- The Repeat Counter N Present Value, a Sequence End Flag, and a Sequence Abort Flag are provided in the SR area.
- The check code can be placed after the terminator in the message sequence. (Supported by SYSMAC-PST and CX-Protocol.)
- The upper and lower bytes of the error check code can be swapped. (Supported by SYSMAC-PST and CX-Protocol.)

1-1-2 Protocols

The Communications Board supports the following protocols.

Protocol	Device	Connection configuration	Outline	Communications instruction
Host Link	PC ← → Personal computer or PT	1 to 1 or 1 to N	Communications procedure between a host personal computer and PCs. Can monitor operation status of PC or bit status from a personal computer. Can transfer data stored in the IOM area of PC to a host personal computer using the TXD instruction.	Host Link commands or TXD instruction
Non-procedure	PC ← → Personal computer or Component	1 to 1	Can achieve simple communications sequences using communications port I/O instructions (TXD, RXD), including data input from a bar code reader and data output to a printer. Can control RS, CS, ER, and DR control signals using the instructions.	TXD and RXD instructions
1 to 1 link	PC ← → PC	1 to 1	Connects two PCs on a one to one basis. The PCs share LR Area data.	---
NT Link	PC ← → PT	1 to 1 or 1 to N	Achieves data communications by connecting PCs and PTs on a one to one basis or one to N basis.	---
Protocol macros	PC ← → Various components	1 to 1 or 1 to N	Can transmit messages by defining a specific communications sequences. Can register up to 1,000 communications sequences. The Protocol Support Software is used to create communications sequences (macros).	PMCR instruction

Note Refer to the operation/system manuals for details on the Host Link procedure, non-procedure communication, 1:1 links, and NT Links. This manual provides details on only protocol macros.

1-1-3 Communications Board Models

The following Communications Boards are available.

The features that are to be used from among those listed below as “YES” for any particular Communications Board is specified in the PC Setup at startup.

Type	Physical specification		Function					
			CPU bus	Host Link	Non-procedure	1:1 link	NT Link (1:1, 1:N)	Protocol macros
C200HW-COM01	Communications Unit connection port	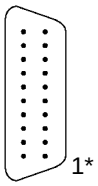 1*	YES	–	–	–	–	–
C200HW-COM02-V1 2*	RS-232C port	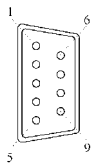	–	YES	YES	YES	YES	–
C200HW-COM03-V1 2*	RS-422A/485 port	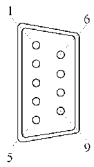	–	YES	YES	YES	YES	–
C200HW-COM04-EV1 3*	Communications Unit connection port	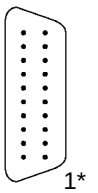 1*	YES	–	–	–	–	–
	RS-232C port	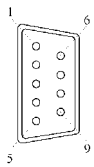	–	YES	YES	YES	YES	YES
C200HW-COM05-EV1 3*	RS-232C port	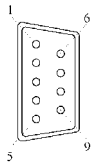	–	YES	YES	YES	YES	YES
	RS-232C port	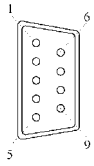	–	YES	YES	YES	YES	YES

Type	Physical specification		Function					
			CPU bus	Host Link	Non-procedure	1:1 link	NT Link (1:1, 1:N)	Protocol macros
C200HW-COM06-EV1 3*	RS-232C port	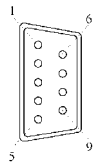	–	YES	YES	YES	YES	YES
	RS-422A/485 port	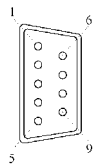	–	YES	YES	YES	YES	YES

1* Interface to C200HW-CE001/CE002 Bus Connection Unit for Link Units such as Controller Link, SYSMAC LINK, or SYSMAC NET Link Units.

2* The RP command (program read) can be used in Host Link Mode when V1 Communications Boards are used with C200HX/C200HG/C200HE-CPU□□-ZE CPU Units. The RP command cannot be used with the previous version of Communications Boards (those without “V1” in the model number.

3* The following protocol macro functionality has been added to the V1 Communications Boards. The following are possible only for the C200HW-COM□□-(E)V1 Communications Boards.

- SUM2 (SUM of two’s complement) and CRC-16 can be used for error checking.
- The Repeat Counter N Present Value, a Sequence End Flag, and a Sequence Abort Flag are provided in the SR area.
- The check code can be placed after the terminator in the message sequence.
- The upper and lower bytes of the error check code can be swapped.

Note When using a 1:N Host Link, 1:N NT Link, or a protocol macro using a RS-232C port, a RS-232C-to-RS-422A/485 Link Adapter (NT-AL001) is required.

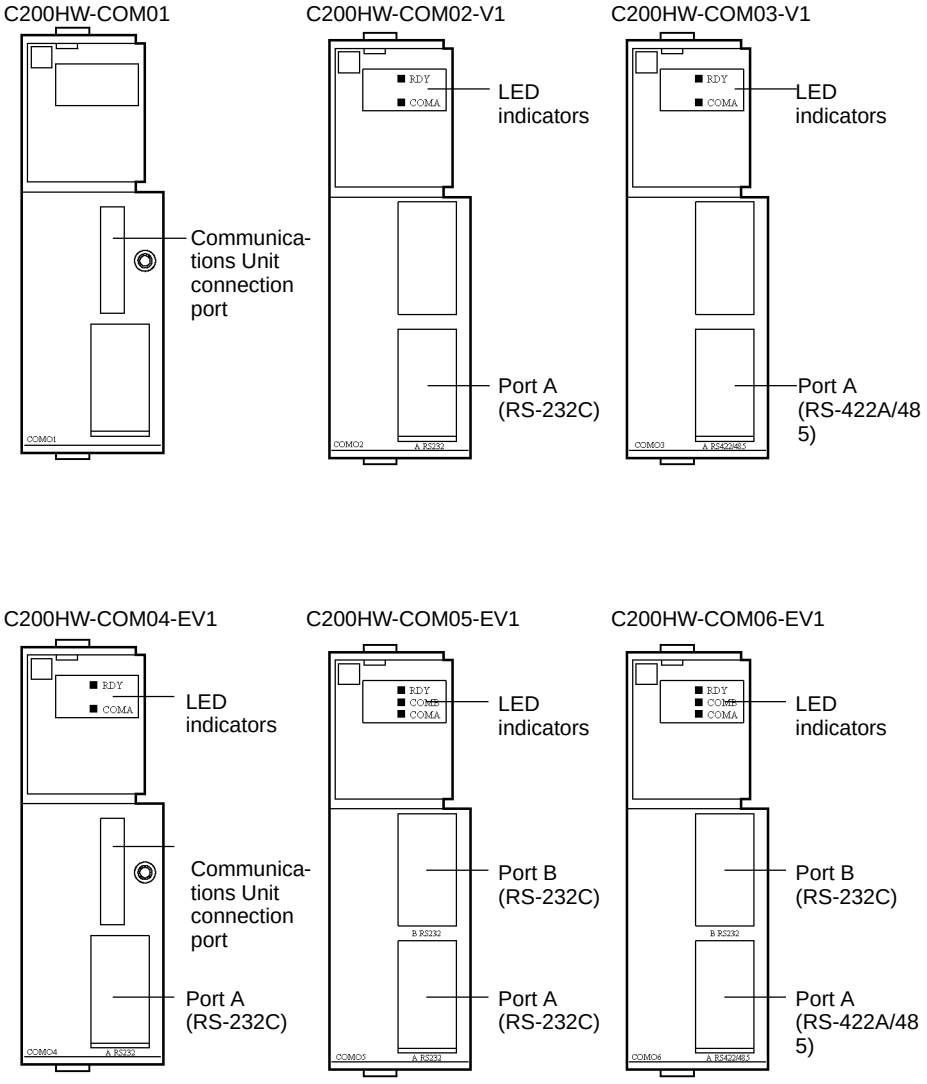

Note 1. V1 Communications Boards are compatible with C200HX/HG/HE-CPU□□-ZE CPU Units.

2. EV1 Communications Boards are compatible with C200HX/HG/HE-CPU□□-ZE CPU Units and have improved protocol macro functionality.

1-1-4 DIP Switch Settings

To use port A (RS-422A/485) on the C200HW-COM03-V1 or C200HW-COM06-EV1, the DIP switches on the Communications Board must be set according to the application conditions.

RS-422A/485 Cable (SW1)

Set DIP switch SW1 as follows according to the type of the RS-422A/485 cable being used:

2-wire: Set to 2
4-wire: Set to 4

Terminator (SW2)

When a Communications Board is the terminator for a 1:N link during communications, turn ON this switch on the last Board and turn OFF this switch on the rest of the Boards.

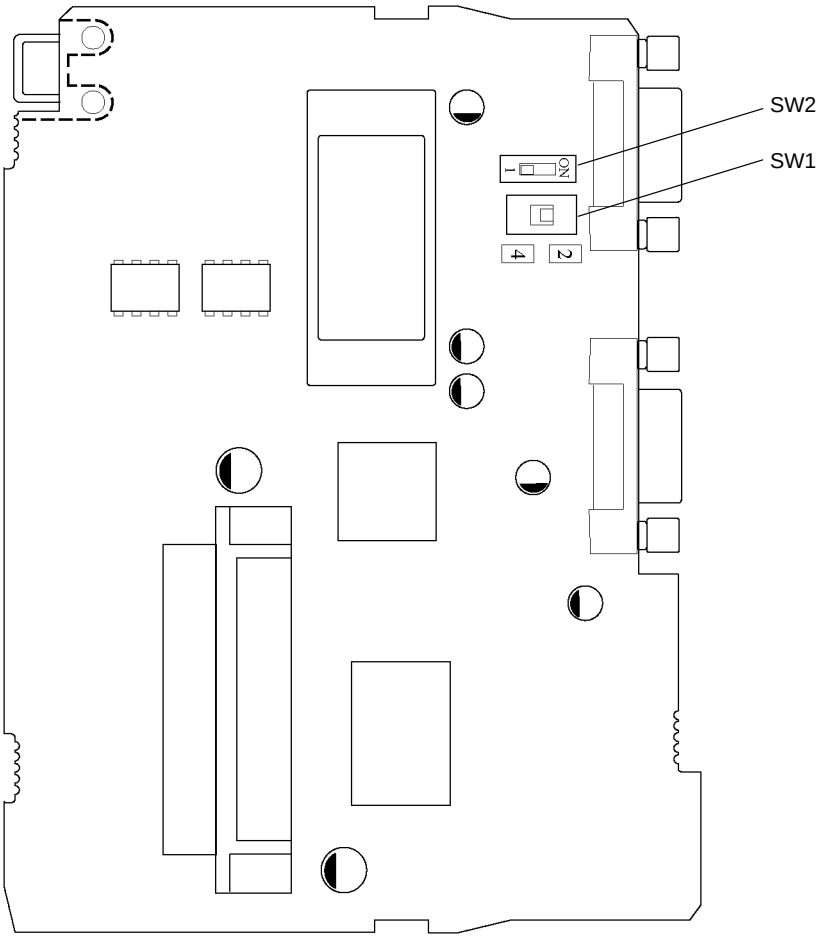

The factory settings are as follows.

DIP switch SW1: 2 (2-wire)

DIP switch SW2: 1 (Terminator OFF)

1-1-5 Applicable CPU Units

The following table lists the models of CPU Units to which Communications Boards can be installed in the option slot.

C200HX	C200HG	C200HE
C200HX-CPU64-E	C200HG-CPU63-E	C200HE-CPU42-E
C200HX-CPU54-E	C200HG-CPU53-E	C200HE-CPU32-E
C200HX-CPU44-E	C200HG-CPU43-E	
C200HX-CPU34-E	C200HG-CPU33-E	
C200HX-CPU85-ZE	C200HG-CPU63-ZE	C200HE-CPU42-ZE
C200HX-CPU65-ZE	C200HG-CPU53-ZE	C200HE-CPU32-ZE
C200HX-CPU64-ZE	C200HG-CPU43-ZE	
C200HX-CPU54-ZE	C200HG-CPU33-ZE	
C200HX-CPU44-ZE		
C200HX-CPU34-ZE		

1-1-6 Installation

The following describes how to install a Communications Board in the option slot of the CPU Unit.

Caution Always turn off the power supply before installing or removing a Communications Board. If the power supply is kept ON while a Communications Board is being installed or removed, operational errors can occur in the CPU Unit, internal devices may be destroyed, or communications may fail.

1, 2, 3... 1. Open the Memory Cassette cover.

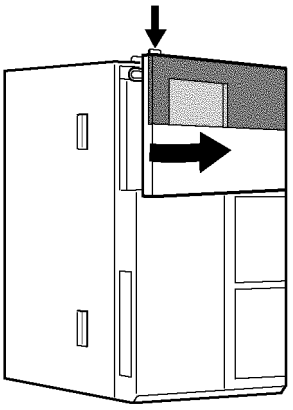

2. Remove the Communications Board cover.

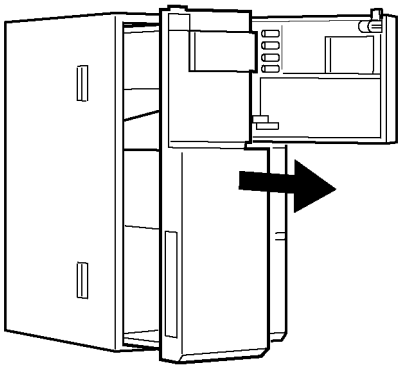

3. Slide in the Communications Board in slit and press it all the way to the back.

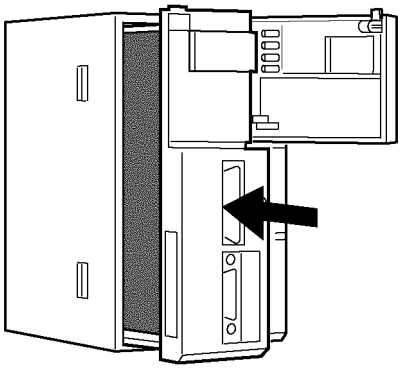

4. Close the Memory Cassette cover.

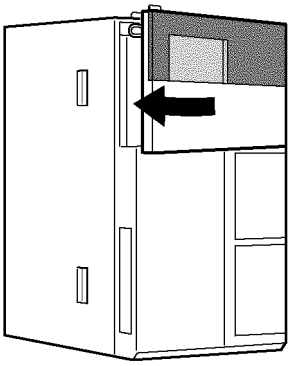

1-1-7 Indicators

The status of the Communications Board is displayed on the LED indicators on the front of the CPU Unit.

Indi-cator	Color	Status	Meaning	Contents
RDY	Green	OFF	Not Ready	Communications Board hardware error
		Flash	Setting error	The system setup or the contents of the protocol data contains an error.
		ON	Ready	The Communications Board is operating normally and communications are en-abled.
COMB	Orange	Flash	Communi-cating	Port B is being used for communications (ON when there is data).
COMA	Orange	Flash	Communi-cating	Port A is being used for communications (ON when there is data)

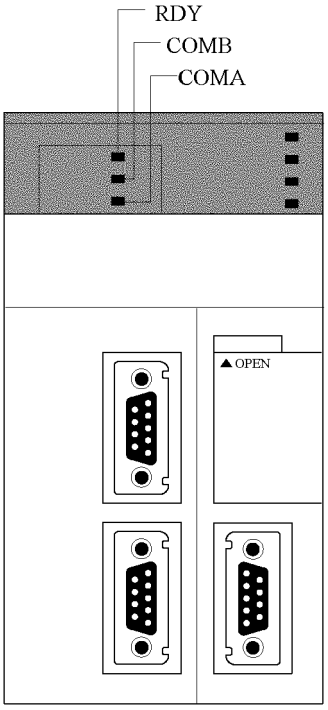

Note The above description is based on the C200HW-COM05-EV1 and C200HW-COM06-EV1.

1-1-8 Communications Board Specifications

Item	C200HW-COM01	C200HW-COM02-V1	C200HW-COM03-V1	C200HW-COM04-EV1	C200HW-COM05-EV1	C200HW-COM06-EV1
Current consumption at 5 V	0.03 A	0.1 A	0.2 A	0.1 A	0.1 A	0.2 A
External dimensions	42.5 × 134 × 98 mm (W × H × D)					
Weight	100 g max.	100 g max.	105 g max.	110 g max.	110 g max.	115 g max.
Standard accessories	---	Plug: XM2A-0901 (OMRON) × 1 Hood: XM2S-0911 (OMRON) × 1			Plug: XM2A-0901 (OMRON) × 2 Hood: XM2S-0911 (OMRON) × 2	

1-1-9 Basic Specifications

The basic specifications will be determined by the basic specifications of the C200HX/HG/HE(-Z) PC used.

1-1-10 Communications Specifications

The following tables provide the communications specifications of RS-232C and RS-422A/485 ports.

RS-232C Port

Item	Specification
Communications method	Half duplex
Synchronization	Start-stop
Baud rate	1,200/2,400/4,800/9,600/19,200 bps
Transmission method	Point-to-point
Transmission distance	15 m max.
Interface	Complies with EIA RS-232C

Connector Pin Assignment

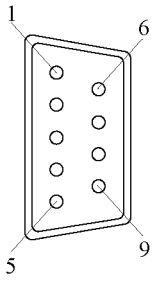

Pin No.	Signal name	Abbreviation	Signal direction
1	Safety ground	FG	–
2	Send data	SD	Output
3	Receive data	RD	Input
4	Send request	RS	Output
5	Send enabled	CS	Input
6	Power supply	5V	–
7	Dataset ready	DR	Input
8	Data terminal ready	ER	Output
9	Signal ground	SG	–
Shell	Safety ground	FG	–

Connectors

Plug: XM2A-0901 (OMRON) or equivalent
Hood: XM2S-0911 (OMRON) or equivalent

Note One plug and one hood are provided.

Recommended Cable

AWG28 × 5P IFVV-SB (manufactured by FUJIKURA DENSEN)
CO-MAVV-SB 5P × AWG28 (manufactured by HITACHI DENSEN)
Line length: 15 m max.

RS-422A/485 Port

Item	Specification
Communications method	Half duplex
Synchronization	Start-stop
Baud rate	1,200/2,400/4,800/9,600/19,200 bps
Transmission method	Point-to-multipoint
Transmission distance	500 m max.
Interface	Complies with EIA RS-422A/485

Connector Pin Assignment

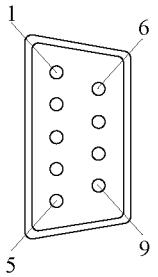

Pin No.	Signal name	Abbreviation	Signal direction
1	Send data –	SDA	Output
2	Send data +	SDB	Output
3	Unused	NC	–
4	Unused	NC	–
5	Unused	NC	–
6	Receive data –	RDA	Input
7	Unused	NC	–
8	Receive data +	RDB	Input
9	Unused	NC	–
Shell	Safety ground	FG	–

Note When the 2-wire communications is set, use 1 and 2, or 6 and 8.

Connectors

Plug: XM2A-0901 (OMRON) or equivalent
Hood: XM2S-0911 (OMRON) or equivalent

Note One plug and one hood are provided.

Recommended Cable

AWG28 × 5P IFVV-SB (manufactured by FUJIKURA DENSEN)
CO-MAVV-SB 5P × AWG28 (manufactured by HITACHI DENSEN)
Line length: 500 m max.

1-1-11 Communications Modes and Transmission Paths

The following table shows the transmission paths that can be used for each of the communications modes.

Communications mode	RS-232C	4-wire 1:1	4-wire 1:N	2-wire 1:1	2-wire 1:N
1:N Host Link	YES	YES	YES	NO	NO
Non-procedure	YES	YES	YES	NO	NO
1:1 link	YES	YES	NO	NO	NO
1:1 NT Link	YES	YES	NO	NO	NO
1:N NT Link	NO	YES	YES	YES	YES
Protocol macros	YES	YES	YES	YES	YES

1-2 Hardware Connections

The connections of the Communications Board to an external device with a RS-232C or RS-422A/485 port are shown below.

Host Link Connections

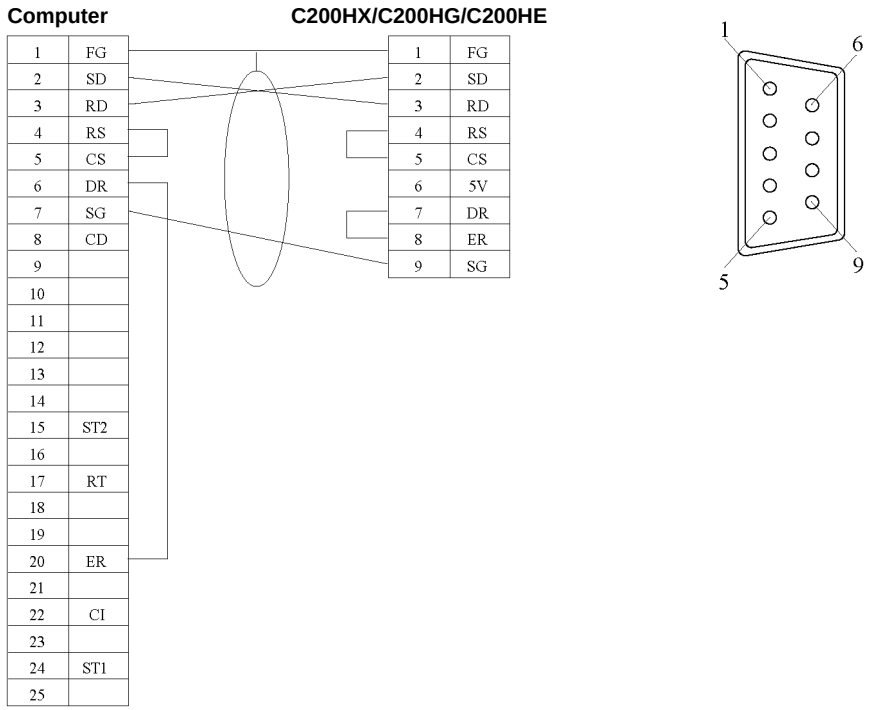

Computer Connections (Cross Connection)

IBM PC/AT or Compatible Computer

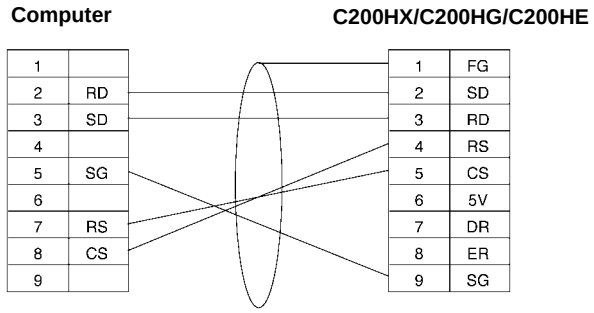

Modem Connections (Straight)

Same for the 3G2A9-AL004-E Link Adapter

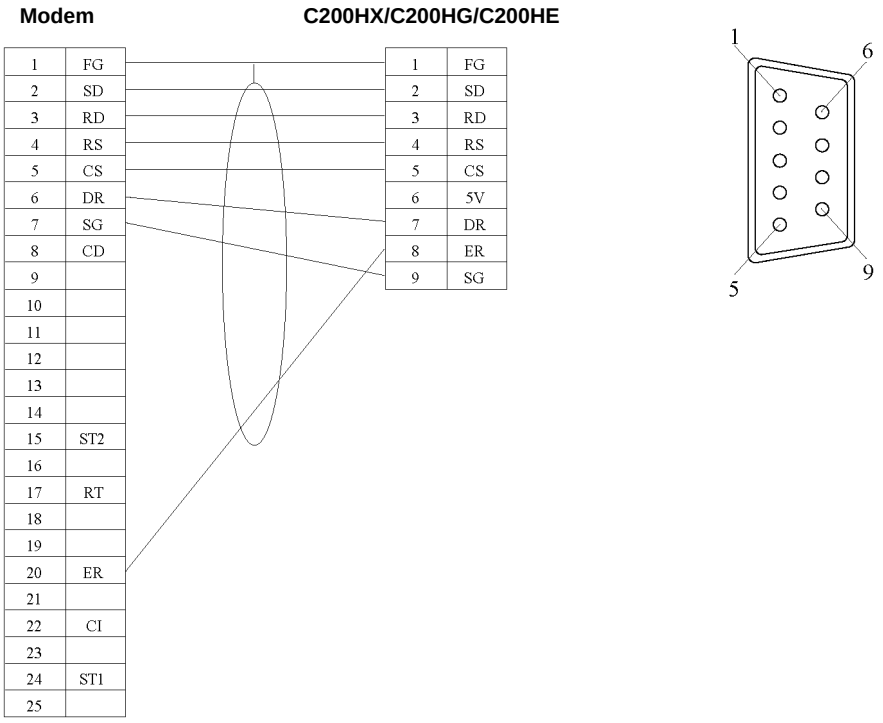

RS-422A/485 Link Adapter Connections (NT-AL001)

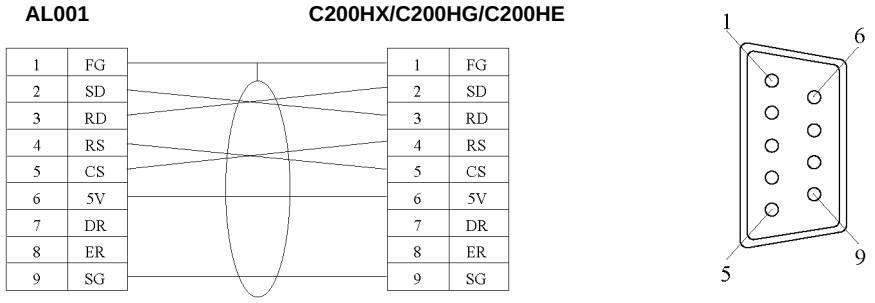

1-3 PC Setup

Various parameters in the PC Setup relating to the Communications Board must be specified in advance for each RS-232C (or RS-422A/485) port to perform communications using the Communications Board. The Communications Board settings that are allocated to the PC Setup in the DM Area of the PC are shown in the following table.

Note
1. Specify the Communications Board system settings using the DM monitor function of the SYSMAC Support Software or System Settings of the Protocol Support Software. When the settings are incorrect (outside of the range or contradiction errors), the system will operate with the initial settings (default values). However, setting data remains in DM as it is.
2. The system error FAL-9C and a FAL-9B will be generated if errors are detected.

Word	Bit	Mode	Details	Remarks
DM 6550	00 to 03	Host Link Non-procedure Protocol macro	Port B communications parameter, standard settings enable 0: Standard settings (default) → Start bits: 1 bit Data length: 7 bits Parity: Even Stop bits: 2 bits Baud rate: 9,600 bps 1: Individual settings → Settings in DM6551 used.	---
	04 to 07	Host Link Non-procedure 1:1 link	CTS control enable 0: Disabled (default) 1: CTS enabled	---
	08 to 11	1:1 link master 1:N NT Link	Port B 1:1 link master: Link words 0: LR00 to LR63 (default) 1: LR00 to LR31 2: LR00 to LR15 Port B 1:N NT Link: Maximum PT unit No. 1 to 7 (BCD) or 1 to 3 for C200HE-CPU□□-E	Cannot be changed 1:1 link is set.
	12 to 15	All modes	Port B mode 0: Host Link (default) 4: 1:1 NT Link 1: RS-232C non-procedure 5: 1:N NT Link 2: 1:1 link slave 6: Protocol macro 3: 1:1 link master	
DM 6551	00 to 07	Host Link Non-procedure Protocol macro	Port B baud rate (bps) 00:1200 (default) 02:4800 04:19200 01:2400 03:9600	Valid for individual settings only (see DM6550, bits 00 to 03)
	08 to 15	Host Link Non-procedure Protocol macro	Port B frame format (default: 00) 00: Start bits 1, Data length 7, Stop bits 1, Parity Even 01: 1, 7, 1, Odd 02: 1, 7, 1, None 03: 1, 7, 2, Even 04: 1, 7, 2, Odd 05: 1, 7, 2, None 06: 1, 8, 1, Even 07: 1, 8, 1, Odd 08: 1, 8, 1, None 09: 1, 8, 2, Even 10: 1, 8, 2, Odd 11: 1, 8, 2, None	

Word	Bit	Mode	Details	Remarks
DM 6552	00 to 15	Host Link Non-procedure	Port B send delay: 0000 (default) to 9999: Unit 10 ms	Check if RS-232C port communications are not possible (Max. delay; 99 s)
DM 6553	00 to 07	Host Link	Port B Host Link mode unit No. 00 (default) to 31 (unit No.)	
	08 to 11	Non-procedure	Port B non-procedure mode start code enable 0: Disabled (default); 1: Enabled	Valid when non-procedure mode start code is enabled in, DM6554, bits 00 to 07
	12 to 15	Non-procedure	Port B non-procedure mode end code enable 0: Disable (Specify the number of receive data items) (default) 1: Enable (Specify the end code) 2: CR, LF	If 0: DM6554 contains number of receive data items. If 1: DM6554 contains the end code. If 2: DM6554 may contain any data.
DM 6554	00 to 07	Non-procedure	Port B non-procedure mode start code 00 (default) to FF (binary)	Valid when non-procedure start code is enabled. Can be updated.
	08 to 15	Non-procedure	Port B When 0 is specified in DM6553: 12 to 15 Number of non-procedure receive data items (binary) 00: (default: 256 bytes) 01 to FF:(1 to 255 bytes) When 1 is specified in DM6553: 12 to 15 Non-procedure mode end code (binary) 00 (default) to FF	Invalid when non-procedure end code is enabled 00: Default (256 bytes)
DM 6555	00 to 03	Host Link Non-procedure Protocol macro	Port A communications parameter, standard settings enable 0: Standard settings (default) → Start bits: 1 bit; Data length: 7 bits; Parity: Even; Stop bits: 2 bits; Baud rate: 9,600 bps 1: Individual settings → Settings in DM6556 used.	---
	04 to 07	Host Link Non-procedure 1:1 link	CTS control enable 0: Disabled (default) 1: CTS enabled	---
	08 to 11	1:1 link master 1:N NT Link	Port A 1:1 link master: Link words 0: LR00 to LR63 (default) 1: LR00 to LR31 2: LR00 to LR15 Port A 1:N NT Link: Maximum PT unit No. 1 to 7 (BCD) or 1 to 3 for C200HE-CPU□□-E	Cannot be changed 1:1 link is set.
	12 to 15	All modes	Port A mode 0: Host Link (default) 1: RS-232C non-procedure 2: 1:1 link slave 3: 1:1 link master 4: 1:1 NT Link 5: 1:N NT Link 6: Protocol macro	

Word	Bit	Mode	Details	Remarks
DM 6556	00 to 07	Host Link Non-procedure Protocol macro	Port A baud rate (bps) 00:1200 (default) 02:4800 04:19200 01:2400 03:9600	Valid for individual settings only (see DM6555, bits 00 to 03)
	08 to 15	Host Link Non-procedure Protocol macro	Port A frame format (default: 00) Start bits / Data length / Stop bits / Parity 00: 1 7 1 Even 01: 1 7 1 Odd 02: 1 7 1 None 03: 1 7 2 Even 04: 1 7 2 Odd 05: 1 7 2 None 06: 1 8 1 Even 07: 1 8 1 Odd 08: 1 8 1 None 09: 1 8 2 Even 10: 1 8 2 Odd 11: 1 8 2 None	
DM 6557	00 to 15	Host Link Non-procedure	Port A send delay: 0000 (default) to 9999: Unit 10 ms	Check if RS-232C port communications are not possible (Max. delay; 99 s)
DM 6558	00 to 07	Host Link	Port A Host Link mode unit No. 00 (default) to 31 (unit No.)	
	08 to 11	Non-procedure	Port A non-procedure mode start code enable 0: Disabled (default); 1: Enabled	Valid when non-procedure mode start code is enabled in, DM6559, bits 00 to 07
	12 to 15	Non-procedure	Port A non-procedure mode end code enable 0: Disable (Specify the number of receive data items) (default) 1: Enable (Specify the end code) 2: CR, LF	If 0: DM6559 contains number of receive data items. If 1: DM6559 contains the end code. If 2: DM6559 may contain any data.
DM 6559	00 to 07	Non-procedure	Port A non-procedure mode start code 00 (default) to FF (binary)	Valid when non-procedure start code is enabled. Can be updated.
	08 to 15	Non-procedure	Port A When 0 is specified in DM6558: 12 to 15 Number of non-procedure receive data items (binary) 00: (default: 256 bytes) 01 to FF:(1 to 255 bytes) When 1 is specified in DM6558: 12 to 15 Non-procedure mode end code (binary) 00 (default) to FF	Invalid when non-procedure end code is enabled 00: Default (256 bytes)

1-4 SR Words and Bits

The following table shows assignment of SR words and bits to the Communications Board in the PC.

Word	Bit(s)	Function name	Read/ Write
SR 268 Communications Board information for FAL9C	00	Hardware error for the Communications Board	R
	01	Port recognition error (hardware error)	R
	02	Protocol data error (protocol data checksum error due to memory corruption)	R
	03 to 10	Reserved for future expansion	R
	11	Port B protocol macro error (error relating PMCR)	R
	12	Port A protocol macro error (error relating PMCR)	R
	13 to 15	15: System setting error 14: Above error for port A 13: Above error for port B	R
SR 283	00 to 03	Port A error code 0:No error (all modes) 1:Parity error (all modes) 2:Framing error (all modes) 3:Overrun error (all modes) 4:Timeout error (1:1 link master, 1:1 link slave mode)	R
	04	ON for communication error at port A (all modes)	R
	05	Port A Send Ready Flag (Host Link, non-procedure mode)	R
	06	Port A Reception Completed Flag (Non-procedure mode)	R
	07	Non-procedure mode: Port A Reception Overflow Flag Protocol macro mode: Port A Sequence Abort Flag (see note 1)	R
	08 to 11	Port B error codes 0:No error (all modes) 1:Parity error (all modes) 2:Framing error (all modes) 3:Overrun error (all modes) 4:Timeout error (1:1 link master, 1:1 link slave mode)	R
	12	ON for communication error at port B (all modes)	R
	13	Port B Send Ready Flag (Host Link, non-procedure mode)	R
	14	Port B Reception Completed Flag (Non-procedure mode)	R
	15	Non-procedure mode: Port B Reception Overflow Flag Protocol macro mode: Port B Sequence Abort Flag (see note 1)	R
SR 284	00 to 07	1:N NT Link Mode: Port A Communications In-progress Flag for Unit PT0 to Port A Communications In-progress Flag for Unit PT7 Protocol Macro Mode: Port A Repeat Counter Present Value (see note 1)	R
	00 to 15	Port A Receive Counter (non-procedure mode)	R
SR 285	00 to 07	1:N NT Link Mode: Port B Communications In-progress Flag for Unit PT0 to Port B Communications In-progress Flag for Unit PT7 Protocol Macro Mode: Port B Repeat Counter Present Value (see note 1)	R
	00 to 15	Port B Receive Counter (non-procedure mode)	R

Word	Bit(s)	Function name	Read/ Write
SR 286	00	Port A Trace In-progress Flag (both continuous/short traces) (protocol macro mode) (see note 2)	R
	01	Port B Trace In-progress Flag (both continuous/short traces) (protocol macro mode) (see note 2)	R
	02 to 05	Reserved for future expansion.	R
	06	Port A Echoback Disabled Flag (for modem control in protocol macro mode; see note 3.)	R
	07	Port B Echoback Disabled Flag (for modem control in protocol macro mode; see note 3.)	R
	08 to 11	Port A Protocol macro error code (protocol macro mode) 0:No error 1:No protocol macro function 2:Sequence number error 3:Receive data write area exceeded (IOM area exceeded) 4:Protocol data error 5: Protocol macro executed during port initialization	R
	12 to 15	Port B Protocol macro error code (protocol macro mode) 0:No error 1:No protocol macro function 2:Sequence number error 3:Receive data write area exceeded (IOM area exceeded) 4:Protocol data error 5: Protocol macro executed during port initialization	R
SR 287	00 to 03	Port A Executed Reception Matrix Case No. (0 to F) (protocol macro mode)	R
	04 to 07	Port A Executed Step No. (0 to F) (protocol macro mode)	R
	08 to 14	Not used.	R
	15	Port A SR 287 Stored Flag 0:Not stored;1:Stored	R
SR 288	00 to 03	Port B Executed Reception Matrix Case No. (0 to F) (protocol macro mode)	R
	04 to 07	Port B Executed Step No. (0 to F) (protocol macro mode)	R
	08 to 14	Not used.	R
	15	Port B SR 288 Stored Flag 0:Not stored;1:Stored	R

Word	Bit(s)	Function name	Read/ Write
SR 289	00	Port A Restart Bit (all modes)	W
	01	Port B Restart Bit (all modes)	W
	02	Port A Continuous Trace Start/Stop Bit (protocol macro mode) (see note 2)	W
	03	Port B Continuous Trace Start/Stop Bit (protocol macro mode) (see note 2)	W
	04	Port A Short Trace Start/Stop Bit (protocol macro mode) (see note 2)	W
	05	Port B Short Trace Start/Stop Bit (protocol macro mode) (see note 2)	W
	06	Port A Echoback Disable Bit (for modem control in protocol macro mode; see note 3.)	W
	07	Port B Echoback Disable Bit (for modem control in protocol macro mode; see note 3.)	W
	08	Port A Instruction Execution Flag (at execution of instruction)	R
	09	Port A Step Error Processing Flag (protocol macro mode)	R
	10	Port A Sequence End Flag (protocol macro mode) (see note 1)	R
	11	Port A Abort Bit (protocol macro mode)	W
	12	Port B Execution Instruction Flag (at execution of instruction)	R
	13	Port B Step Error Processing Flag (protocol macro mode)	R
	14	Port B Sequence End Flag (protocol macro mode) (see note 1)	R
	15	Port B Abort Bit (protocol macro mode)	W

Note

1. Supported only by the C200HW-COM04/05/06-EV1 Communications Boards.
2. These flags can be used only from the Protocol Support Software. They cannot be used in the ladder-diagram program.
3. These bits/flags are only available for models with lot number 0140 or later. The meaning of lot numbers is shown below.

Lot No: **0140** — Manufactured on April 1st, 2000.

- The year is indicated with the last digit. In this case, “0” indicates “2000.”
- Month of manufacture. October, November, and December are indicated with X, Y, and Z respectively. In this case, the month is “April.”
- Day of manufacture. In this example, the day is “1.”

SECTION 2
Protocol Macros

This section describes the protocol macro function supported by the Communications Board, and how to use the standard macros. Troubleshooting is also described.

2-1 Outline 24
2-1-1 Protocol Macro Features 25
2-1-2 Connections 26
2-1-3 PC Setup 31
2-1-4 Structure of Protocol Macros 31
2-2 Protocol Support Software 34
2-2-1 Models 34
2-2-2 Features of the Protocol Support Software 34
2-2-3 Connecting the Protocol Support Software 35
2-2-4 Function List 35
2-2-5 Computer Requirement 36
2-3 Using the System Protocol Macros 38
2-3-1 System Protocols 38
2-3-2 Executing System Protocols 39
2-4 Troubleshooting 55

2-1 Outline

Protocol macros are used to create user communications procedure. The Protocol Support Software is used to create protocol macros, which can then be executed using the PMCR instruction to communicate with various devices connected to the RS-232C or RS-422A/485 port.

Twelve protocol macros are provided as standard communications protocols in the Communications Boards (COM04-EV1, COM05-EV1, and COM06-EV1) and in Protocol Support Software. These macros can be used as they are or they can be modified.

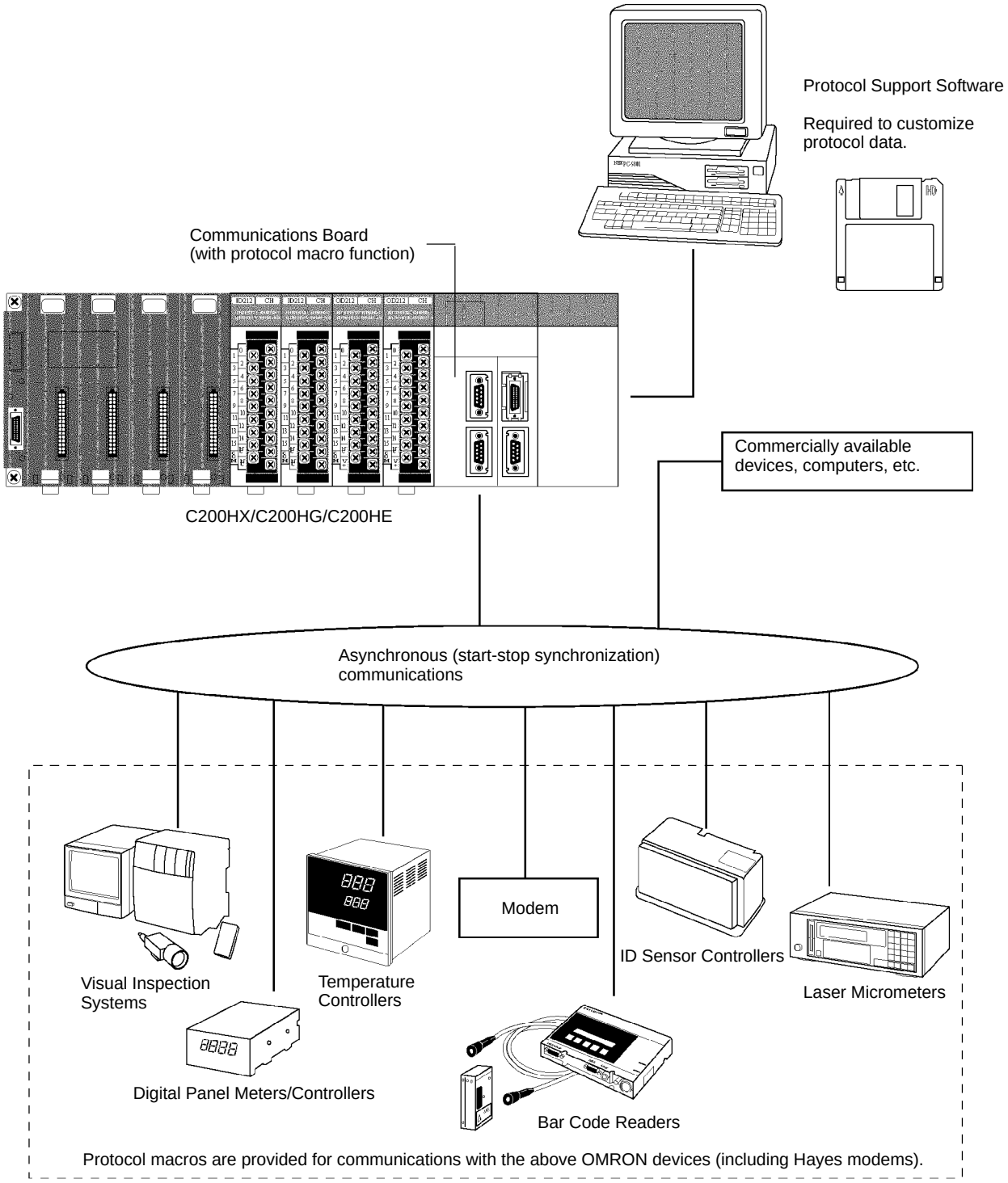

Protocols consist of send/receive sequences. A protocol is transferred to the Communications Board and then the required sequence is executed by specifying the sequence number in the PMCR instruction in the PC. A sequence consists of commands recorded in steps. Steps can be repeated, or they can be branched or ended depending on the responses received.

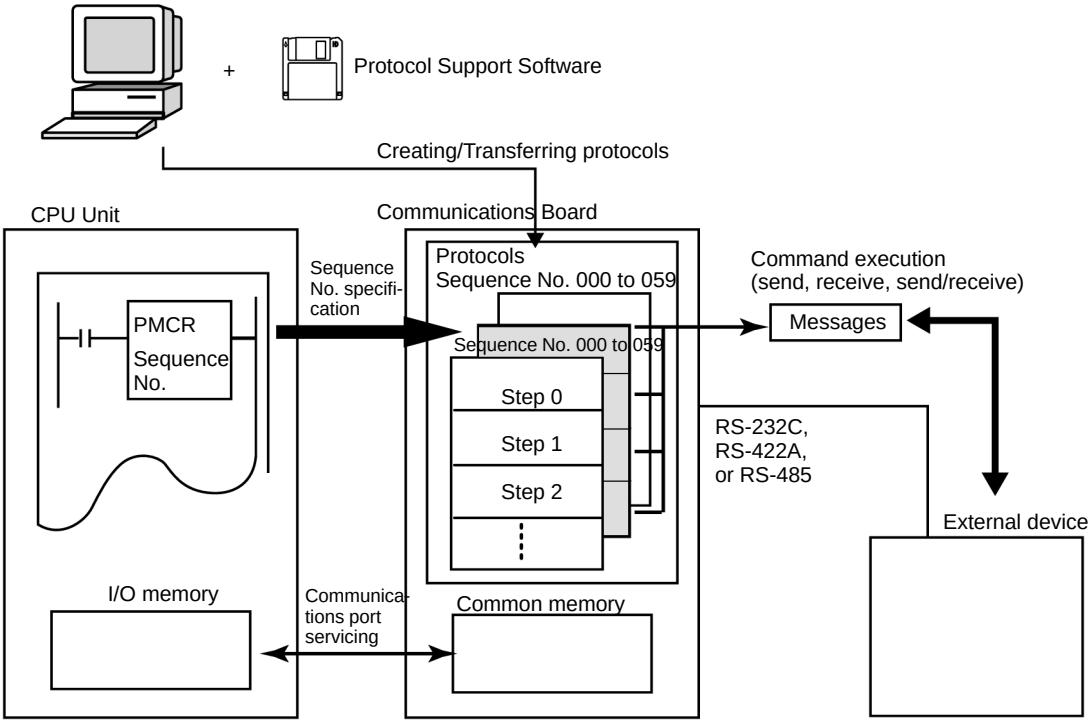

2-1-1 Protocol Macro Features

Support for a Wide Range of Communications Protocols

Communications are possible using protocol macros with essentially any external device that has an RS-232C, RS-422A, or RS-485 port and supports half-duplex/stop-start synchronization.

Create the Required Communications Frames

Essentially any communications frames can be created to fit the message specifications of the external device: command + data and other send frames, and anticipated response frames.

Data Processing for Communications

Error check code calculations, send frame length calculations, and ASCII-Hex conversions are all supported.

Send/Receive Time Monitoring

Reception time, reception end monitoring, and send end monitoring are supported. You can either retry or end processing with these times are exceeded.

Retry Processing

The number of retries can be set to automatically repeat send/receive operations that end in errors.

PC Read/Write Variables in Send/Receive Frames

Variables for reading PC I/O memory can be included in send message frames for use as addresses or data when reading PC data. Variables for writing PC I/O memory can be included in receive message frames for use as addresses or data when writing PC data

Repeat Counters

Repeat counters can be used can be used for send/receive processing to enable 1:N communications by switching addresses to send the same data, or to change write addresses when receiving data to write to PC I/O memory.

Improved Protocol Macros

The following points have been improved in the protocol macro functionality for the C200HW-COM04/05//06-EV1 Communications Boards.

- Addition of SUM2 (2's complement of SUM) and CRC-16 error check codes.

- Addition of the following to the SR Area data: Repeat Counter N Present Value, Sequence End Flag, and Sequence Abort Flag.
- Specification of the check code after the terminator in the message sequence.
- Reverse direction for error check codes.

2-1-2 Connections

The connections required to use protocol macros are shown below.

Connection to Devices with RS-232C Interface (C200HW-COM05-EV1 Example)

A 1:1 connection (cable length: up to 15 m) is used for a RS-232C port. The following diagram shows the connections for a RS-232C port.

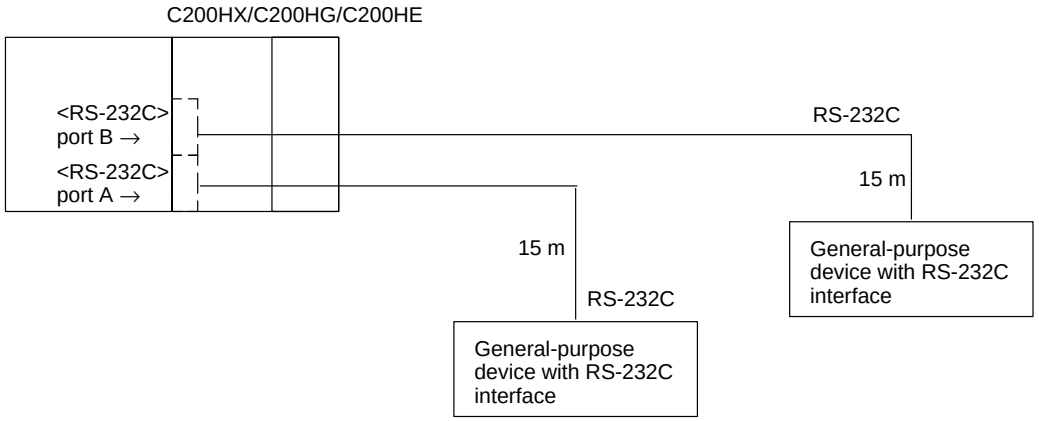

Connection to Devices with RS-422A/485 Interface (C200HW-COM06-EV1 Example)

A 1:N connection (cable length: up to 500 m) can be used for a RS-422A/485 port. These connections are also useful for longer cable distances with a 1:1 connection. For 1:N connections, up to 32 devices can be connected. (With 2-wire communications, this figure includes the Communications Board whereas with 4-wire communications it does not.) The following diagram shows the connections for a RS-422A/485 port.

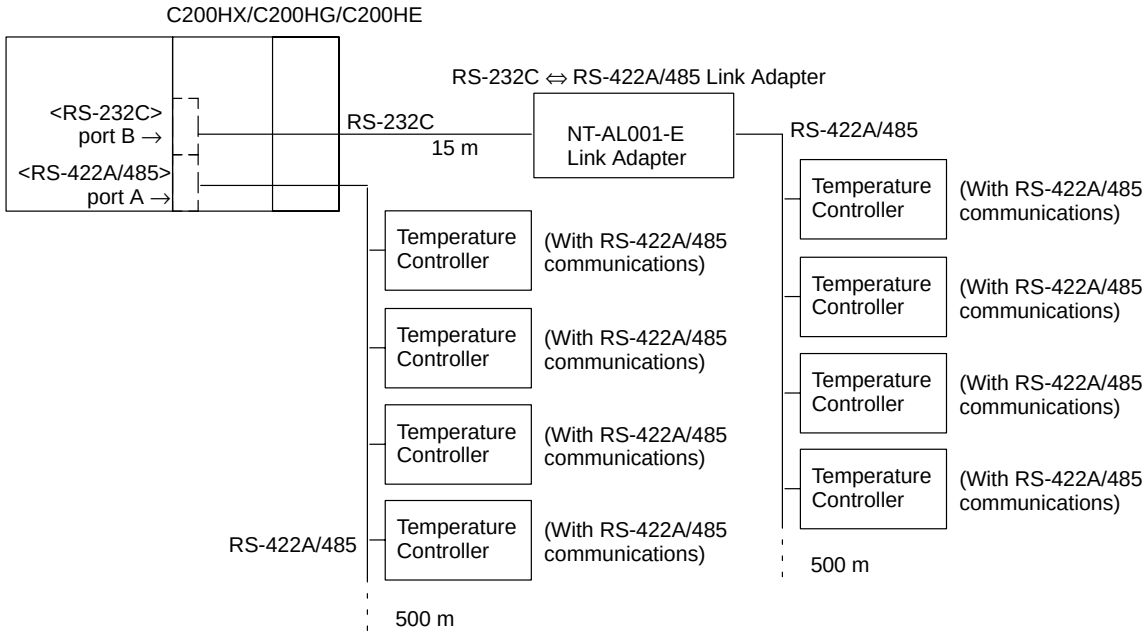

Note
1. The total length of RS-232C cable must be 15 m max. If the length exceeds 15 m, normal operation cannot be guaranteed.
2. The total length of RS-422A/485 cable must be 500 m max. and each branch line must be 10 m max. If the total length exceeds 500 m or branch lengths exceed 10 m, normal operation cannot be guaranteed.

2-Wire Connections (PC is Master)

Connecting an RS-422A/485 Port

The following diagram shows the wiring configuration for connecting devices that support RS-422A/485 2-wire communications to the RS-422A/485 port of the C200HW-COM06-EV1 Communications Board.

Connections can be either 1:1 or 1:N. Up to 32 Units can be connected for 1:N communications, including the Communications Board.

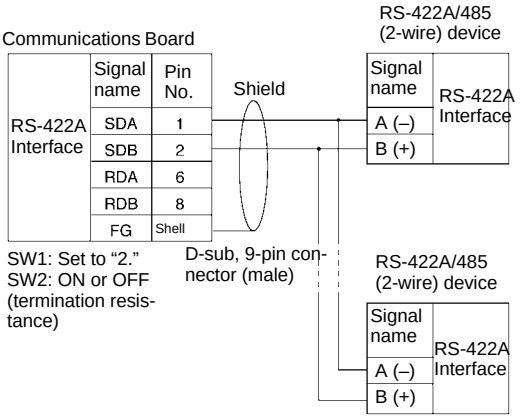

Connecting an RS-232C Port

The following diagram shows the wiring configuration for connecting devices that support RS-422A/485 2-wire communications to the RS-232C port of a Communications Board (C200HW-COM04-EV1 port A, C200HW-COM05-EV1 port A/B, or C200HW-COM06-EV1 port B).

This application requires an NT-AL001-E Link Adapter (sold separately).

Connections can be either 1:1 or 1:N. Up to 32 Units can be connected for 1:N communications, including the Communications Board.

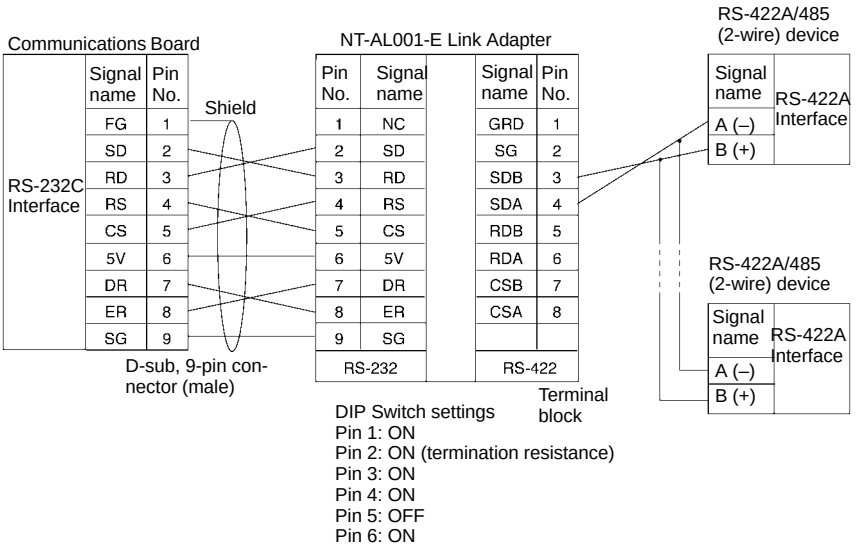

4-Wire Connections

Using PC as Master

Connecting an RS-422A/485 Port

The following diagram shows the wiring configuration for connecting devices that support RS-422A/485 4-wire communications to the RS-422A/485 port of the C200HW-COM06-EV1 Communications Board.

Connections can be either 1:1 or 1:N. Up to 32 Units can be connected for 1:N communications, including the Communications Board.

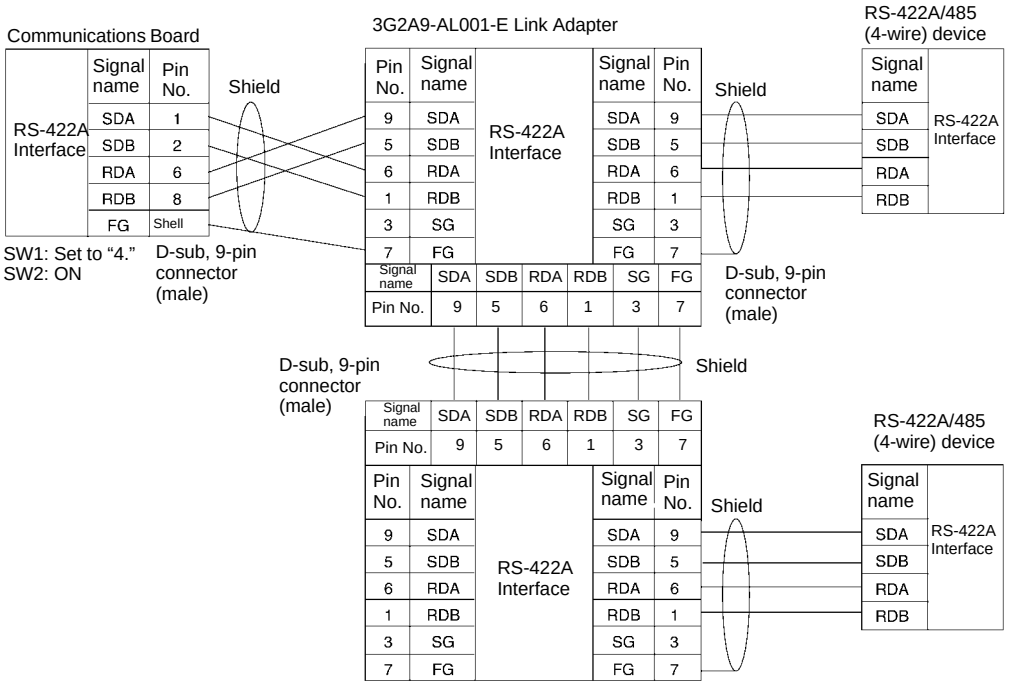

Connecting an RS-232C Port

The following diagram shows the wiring configuration for connecting devices that support RS-422A/485 4-wire communications to the RS-232C port of a Communications Board (C200HW-COM04-EV1 port AC200HW-COM04-EV1 port A, C200HW-COM05-EV1 port A/B, or C200HW-COM06-EV1 port B).

This application requires NT-AL001-E Link Adapters (sold separately).

Connections can be either 1:1 or 1:N. Up to 32 Units can be connected for 1:N communications, including the Communications Board.

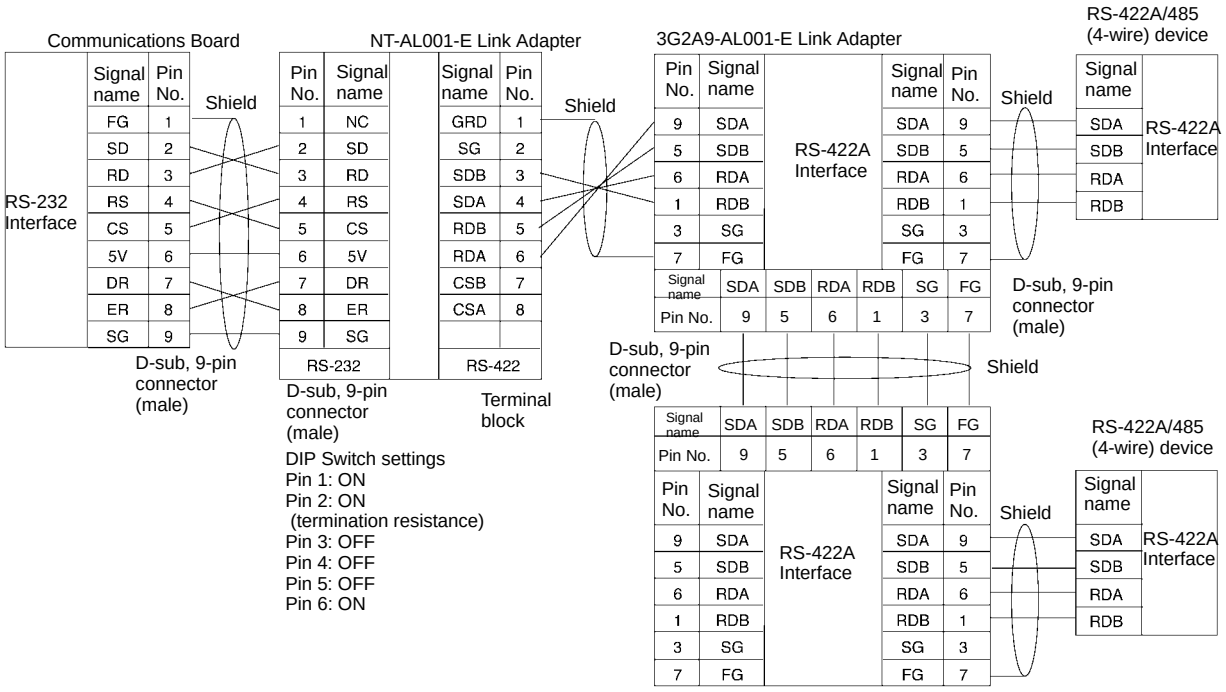

Using Personal Computer as Master (PC is Slave)

Connecting an RS-422A/485 Port

The following diagram shows the wiring configuration for connecting devices that support RS-422A/485 4-wire communications to the RS-422A/485 port of the C200HW-COM06-EV1 Communications Board.

Connections can be either 1:1 or 1:N. Up to 32 Units can be connected for 1:N communications, including the Communications Board.

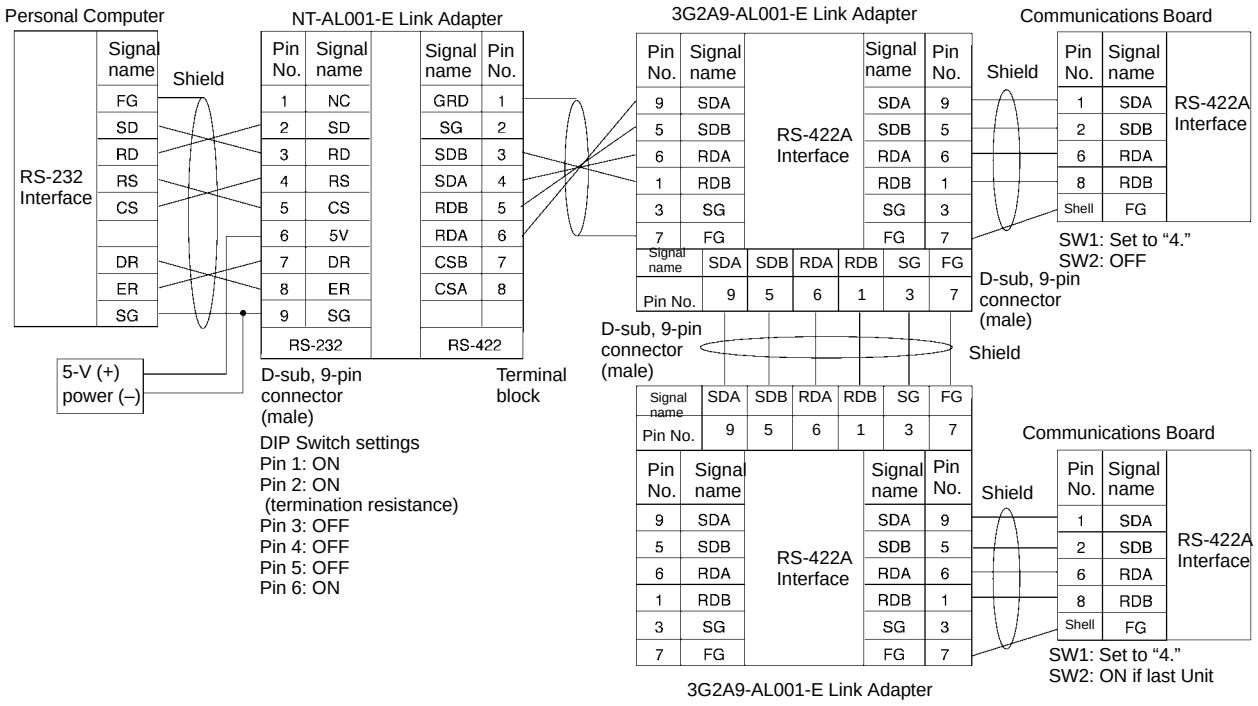

Connecting an RS-232C Port

The following diagram shows the wiring configuration for connecting devices that support RS-422A/485 4-wire communications to the RS-232C port of a Communications Board (C200HW-COM04-EV1 port A, C200HW-COM05-EV1 port A/B, or C200HW-COM06-EV1 port B).

This application requires NT-AL001-E Link Adapters (sold separately).

Connections can be either 1:1 or 1:N. Up to 32 Units can be connected for 1:N communications, including the Communications Board.

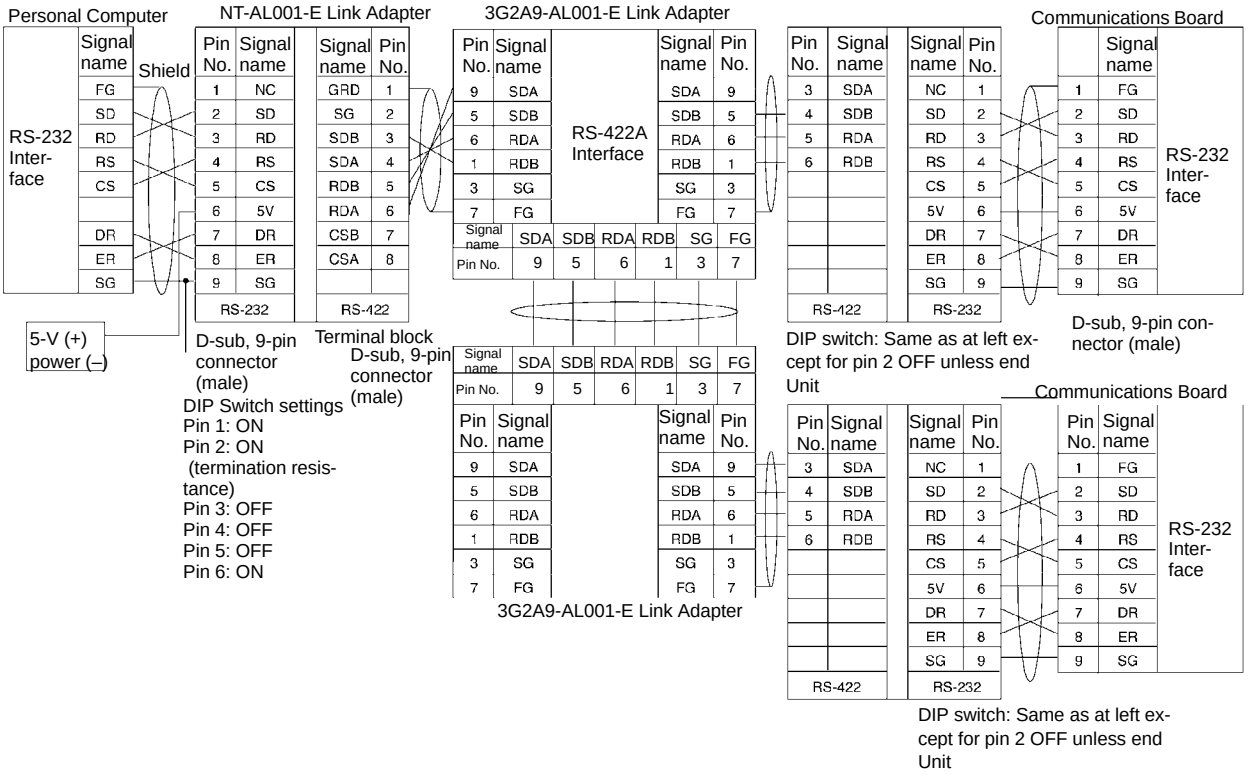

2-1-3 PC Setup

Set the PC Setup as described next to communicate using a protocol macro.

Communications Mode

Protocol macro: Set the DM6550 bits 12 to 15 to 6 (RS-232C port B)
Set the DM6555 bits 12 to 15 to 6 (RS-232C port A)

Communications Parameters

Any conditions can be set. The following communications parameters are used for the default settings:

Start bits:	1 bit
Data length:	7 bits
Parity:	Even
Stop bits:	2 bits
Baud rate:	9,600 bps

Note

1. See *1-3 PC Setup* for the PC Setup procedure.
2. The system is initially set to the default settings. The default settings must be changed to use any other settings for the protocol macro function.

2-1-4 Structure of Protocol Macros

The protocol macro function allows a user to create original communications procedure. Users can freely edit communications procedures (called communications sequences) for various communications devices, such as general-purpose components connected to RS-232C or RS-422A/485 interfaces, and can execute these procedures using the PMCR instruction.

Structure of Communications Sequences

Up to 1,000 (0 to 999) sequences can be registered and used. Each communications sequence consists of up to 16 steps.

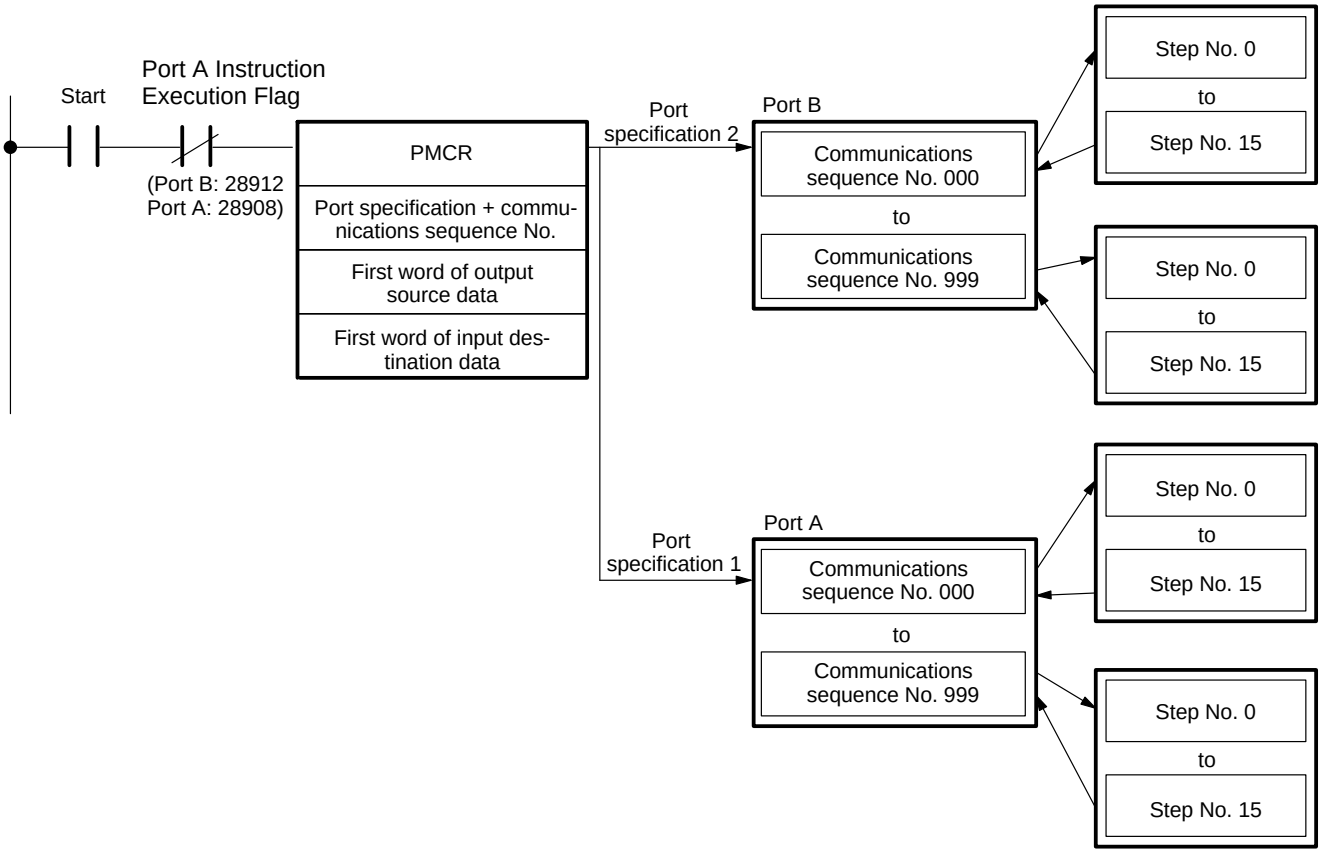

Communications Sequence Settings

The settings that can be made for communications sequence using the Protocol Support Software are shown in the following table.

Unit	Item	Contents	Settings
Sequence	Transmission control	Set transmission control method such as X-on/X-off flow control or RS/CS flow control.	X-on/X-off, RTS/CTS, modem control, delimiter control, and contention control
	Link words	Set words for which data is shared between the PC and a Communications Board.	IR, LR, HR, AR, DM, or EM address
	Wait times	Set wait times for communications processing.	Receive wait, receive finish, send finish Units of 0.01 s, 0.1 s, 1 s, or 1 min
	Response method	Set the timing for writing data that was received.	Scan or interrupt notification (see note 1)
Step	Repeat counter	Set the repeat count for the step.	Constants 1 to 255, or IR, LR, HR, AR, DM, or EM address
	Commands	Set the communications commands.	Send, Recv, or Send & Recv
	Retry count	Set an error retry count when the command setting is Send&Recv.	0 to 9
	Send wait time	Set the wait time required to send data at transmission.	Units of 0.01 s, 0.1 s, 1 s or 1 min
	Send message	Set send data when the command is Send or Send&Recv.	Header, address, length, data, error check code, and terminator
	Receive message	Set expected receive data when the command is Recv or Send&Recv.	Header, address, length, data, error check code, and terminator (see note 3)
	Receive matrix	Set expected receive data (up to 15 sets) and change the processing according to the receive data when the command is Recv or Send&Recv.	Header, address, length, data, error check code, terminator, next process
	With/without response	Set whether the data that was received is written.	Yes or no (see note 2)
	Next process	Set the next step to which control is to be passed when a step is terminated normally.	End, Goto, Next Abort
	Error process	Set the next step to which control is to be passed when a step is terminated in error.	End, Goto, Next Abort

Note
1. Valid only when “Yes” is specified for response notification.
2. When a response method is set, “Yes” must be set for response notification. If “No” is set for response notification, the specified response method will be invalid.
3. If protocol macro is executed with 31 or more write data attributes registered in one message, a protocol data error and a FAL-9C (non-fatal system error) will be generated.

2-2 Protocol Support Software

The Protocol Support Software was developed to allow users to create specific protocols using the protocol macro function supported by Communications Boards. The Protocol Support Software contains system protocols. These system protocols can be used as they are or can be used after modification.

2-2-1 Models

The following models of Protocol Support Software are available.

Name	Specifications	Model No.
Protocol Support Software (PSS)	MS-DOS, Ver. 6.□	C200HW-ZW3AT1-E
Protocol Support Tool (SYSMAC-PST) (for C200HX/HG/HE PCs)	Windows 95	WS01-PSTF1-E
CX-Protocol (for CS1 and C200HX/HG/HE PCs)	Windows 95/98	WS02-PSTC1-E

2-2-2 Features of the Protocol Support Software

The features of the Protocol Support Software are outlined below.

System Protocols

System protocols are provided for data transfer for OMRON Temperature Controllers, Panel Meters, Intelligent Signal Processors, Bar Code Readers, Modems, and other components.

Simultaneously Monitor Tree and Table Displays

With the Protocol Support Tool for Windows 95/98, you can display data in a tree hierarchy on the left side of the screen to monitor present values and set values and still be able to easily see overall data relationships.

Object Oriented Operation

With the Protocol Support Tool for Windows 95/98, you can activate dialog boxes by double-clicking objects instead of using the menus, enabling easy creation of protocols without having to learn complex menu operations.

Trace Send/Receive Messages

Trace operations can be executed from the Protocol Support Software to trace up to 670 bytes of text string data when the Communications Board sends and receives messages. The data that is recorded can be read and displayed or it can be saved in trace files.

2-2-3 Connecting the Protocol Support Software

The following diagrams show how to connect an RS-232C port on a computer to either the peripheral connector on the CPU Unit or an RS-232C port on the Communications Board.

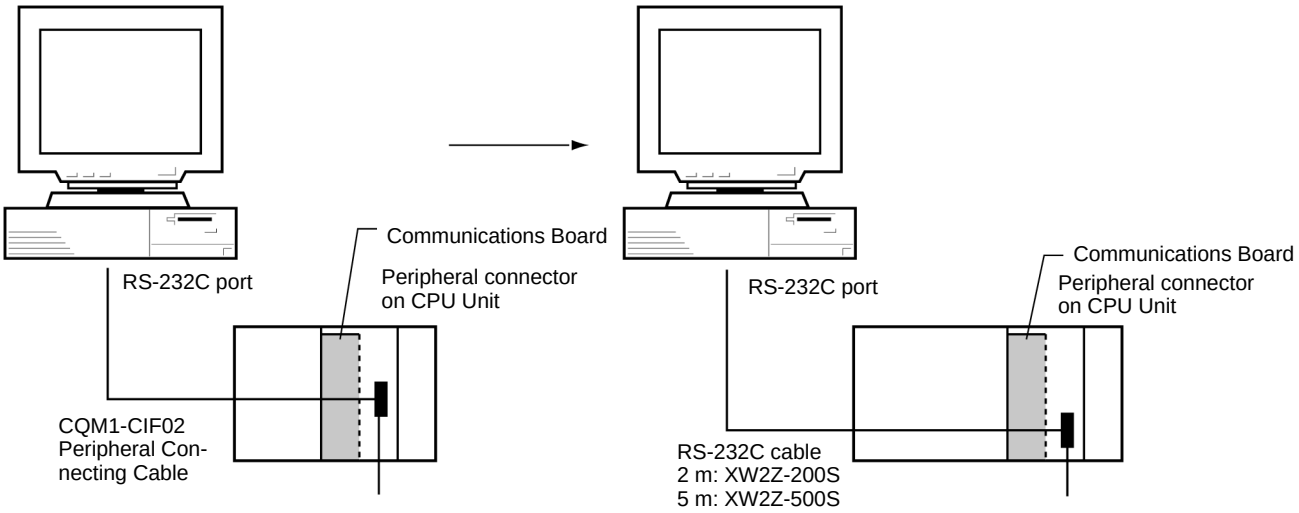

Note A D-sub 25-pin (female) to 9-pin (female) converter is requite at the computer.

2-2-4 Function List

The following table lists functions of the Protocol Support Software.

Function name	Subfunction	Contents
Protocol list	---	Displays a list of the protocols that are registered.
	Create Protocol	Creates a new protocol.
	Delete protocol	Deletes a protocol.
	Copy protocol	Copies a protocol.
	Change protocol name	Changes a protocol name.
	Sequence No. range	Sets the sequence numbers to be used by the protocol.
Save	Save all	Saves the protocol data and system settings.
	Save protocol	Saves the protocol data of the specified protocol.
	Save system settings	Saves the system settings.
Retrieve	Retrieve all	Retrieves the protocol data and system settings.
	Retrieve protocol	Retrieves the protocol data of the specified protocol.
	Retrieve system settings	Retrieves the system settings.
System settings	Environment	Sets the printer and a default data directory path.
	Communications	Sets the PC communications parameters.
	PC setup	Sets the PC setup.
Transfer/Protocol	PC protocol list	Displays a list of protocols that are registered for the PC.
	File protocol list	Displays a list of protocols in an object file.
	PC –>Computer	Reads protocol data from the PC.
	Computer –>PC	Writes protocol data to the PC.
	Computer <—> PC	Compares protocol data between the PC and support software.
	Protect	Sets/releases protection of protocol data.
Transfer/PC setup	PC –> Computer	Reads setup information from the PC.
	Computer –> PC	Writes setup information to the PC.
Area monitor	---	Changes the monitor word or the present value of the specified word.
Trace/Read trace	---	Traces a transmission line and reads trace data.
Print	Print all	Prints all protocol data.
	Print protocol	Prints the protocol data of the specified protocol.

Function name	Subfunction	Contents
Files	Files	Displays a file list of the specified drive.
	Copy file	Copies the specified file.
	Delete file	Deletes the specified file.
	Change name	Changes the name of the specified file.
	Change drive	Changes the drive of the file display.
Communications sequence list	---	Displays a list of sequences in the specified protocol.
	Copy sequence	Copies the specified sequence.
	Delete sequence	Deletes the sequence.
	Change sequence name	Changes the name of the specified sequence.
Send message list/ Receive message list	---	Displays a list of send messages and received messages in the specified protocol.
	Copy message	Copies the specified message.
	Delete message	Deletes the specified message.
	Change message name	Changes the message name of the specified message.
Receive matrix list	---	Display a list of receive matrices of the specified protocol.
	Copy matrix	Copies the specified matrix.
	Delete matrix	Deletes the specified matrix.
	Change matrix name	Changes the matrix name of the specified matrix.
Edit communications sequence	---	Edits a communications sequence.
Edit send message/ Edit receive message	---	Edits send/receive messages.
Edit receive matrix	---	Edits a receive matrix.

2-2-5 Computer Requirement

This section shows the operating environment for the Protocol Support Software.

MS-DOS (PSS)

Item	Condition
CPU	80386/80486
Memory	440k bytes or more free
Hard disk	1M bytes or more free
Floppy disk drive	1 drive min.
Extended memory	1M byte or more of extended memory is desirable to use the software comfortably.
Operating system	MS-DOS V6.□
Display	640 × 480 dots (VGA)
Keyboard	101,106 keyboard

Windows 95/98 (SYSMAC-PST)

Item	Minimum	Recommended
Computer	MS-DOS	
CPU	486DX, 100 MHz	Pentium, 90 MHz or higher
OS	Microsoft Windows 95	
Memory	16 Mbytes or more free	24 Mbytes or more free
Hard disk	20M bytes or more free	50M bytes or more free
Floppy disk drive	1 drive min. (1.44 Mbyte)	
Display	VGA or better	SVGA or better

Note SYSMAC-PST is not supported for Microsoft Windows Ver. 3.1.

Windows 95/98 (CX-Protocol)

Item	Minimum	Recommended
Computer	MS-DOS	
CPU	Pentium, 90 MHz	Pentium, 166 MHz or higher
OS	Microsoft Windows 95/98	
Memory	16 Mbytes or more free	24 Mbytes or more free
Hard disk	24M bytes or more free	50M bytes or more free
Floppy disk drive	1 drive min. (1.44 Mbyte)	
CD-ROM drive	1 drive min.	
Display	SVGA (800 × 600 pixels) or better	

Note CX-Protocol is not supported for Microsoft Windows Ver. 3.1.

2-3 Using the System Protocol Macros

This section describes how to use system protocols that are built into the Protocol Support Software and Communications Boards.

2-3-1 System Protocols

The following 12 standard protocols are provided with the Protocol Support Software and Communications Boards.

Protocol name	Function
E5□K Digital Controller Read	Protocol for controlling an E5□K Digital Controller via the Communications Board. Procedures for reading the MV the operating parameter settings
E5□K Digital Controller Write	Protocol for controlling an E5□K Digital Controller via the Communications Board. Procedures for writing set points and operating parameters.
E5ZE Temperature Controller Read	Protocol for controlling an E5ZE Temperature Controller via the Communications Board. Procedures for reading measured temperature and operating parameter settings.
E5ZE Temperature Controller Write	Protocol for controlling an E5ZE Temperature Controller via the Communications Board. Procedures for writing control temperatures and operating parameters.
E5□J Temperature Controller	Protocol for controlling a E5□J Temperature Controller via the Communications Board. Procedures for writing set points, reading output amounts, and reading/writing operating parameters.
ES100□ Controller	Protocol for controlling an ES100□ Controller via the Communications Board. Procedures for writing adjustment parameters, reading operation amounts, and writing/reading operating parameters.
Digital Panel Meter	Protocol for controlling a Digital Panel Meter via the Communications Board. Procedures for writing comparison values and reading display values are set.
V500/V520 Bar Code Reader	Protocol for controlling a Bar Code Reader via the Communications Board. Procedures for controlling the Bar Code Reader in remote mode, reading the data that has been read by the Bar Code Reader, and reading/writing operating parameters.
3Z4L Laser Micrometer	Protocol for controlling a Laser Micrometer via the Communications Board. Procedures for controlling the Laser Micrometer in remote mode, reading measured data, and writing/reading operating parameters.
F200/F300/F350 Visual Inspection Systems	Protocol for controlling a Visual Inspection System via the Communications Board. Procedures for controlling the Visual Inspection System in remote mode, reading measured values, and writing/reading operating parameters.
V600/V620 ID Controllers	Protocol for controlling an ID Controller via the Communications Board. Procedures for performing Read/Write operations of the ID Controller and writing/reading operating parameters.
Hayes modem AT commands	Protocol for controlling a Hayes modem (AT commands) via the Communications Board. Procedures for initialization of the modem, dialing, data transmission, switching to escape mode, and disconnecting the line.

Note There are system protocols for which sending and receiving data between 32 devices in a 1:N connection cannot be executed in one sequence. This is because of limits on the number of words that can be sent and received between the PC and the Communications Board. With these kind of sequences, unit numbers that represent the connected devices can be specified separately. Therefore, specify unit numbers with the send data, and repeat the sequence for the necessary number of times.

2-3-2 Executing System Protocols

Use the PMCR instruction to execute system protocols. The execution procedure and operand settings of the PMCR instruction are described below.

Ladder Symbols

PMCR(260)
C
S
D

@PMCR(260)
C
S
D

Operand Data Areas

C: Control word
IR, SR, AR, DM, EM, HR, TC, LR, #

S: First output word
IR, SR, AR, DM, EM, HR, TC, LR, #

D: First input word
IR, SR, AR, DM, EM, HR, TC, LR

Description

PMCR(260) calls and executes the specified communications sequence (protocol) that has been registered in the Communications Board installed in the PC. Execution results in data transfer with a external device connected to the Communications Board's port A or port B.

Operands

The leftmost digit of the control word, C (bits 12 to 15), specifies the Communications Board port and the right three digits specify the communications sequence (000 to 999), as shown in the following diagram.

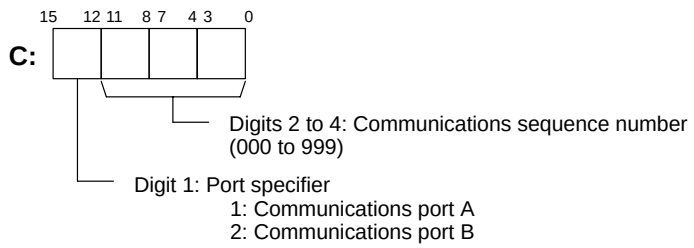

The first output word, S, specifies the address of the first word containing the data to be sent.

If there is no send data, set S to #0000. If any other constant or an address is specified when there is no send data, the Error Flag (SR 25503) will turn ON and the instruction will not be executed.

S actually contains the number of words to be sent and S+1 and the following words contains the actual data to be sent, as shown in the following diagram.

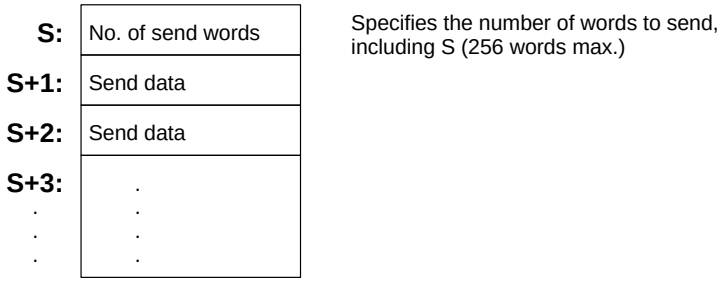

The first input word, D, specifies the address of the first word in which to store the receive data.

If there is no receive data, set D to a dummy address. If a constant is specified, the Error Flag (SR 25503) will turn ON and the instruction will not be executed. (Nothing will be written to the dummy address and it can be used for another purpose.)

When data is received, D will actually contain the number of words received and D+1 and the following words contains the actual receive data, as shown in the following diagram.

D	No. of received words	Specifies the number of words received, including D (256 words max.)
D+1:	Receive data	
D+2:	Receive data	
D+3:	. . . .	

Flags

ER: The Error Flag (SR25503) will turn ON when any of the following conditions occur.

The content of a word containing an indirect DM/EM address is not BCD or the DM/EM area boundary has been exceeded.

D is not BCD or DM 6144 through DM 6655 has been used for D.

Another PMCR(260) instruction was already in progress when the instruction was executed.

The port specified was not 1 or 2.

Application Example: E5□K Digital Controller Read (Sequence 000)

This example uses the following system. The unit number of the Temperature Controller is specified and a command to read the present value is sent. The present value in the response is then received in the specified words.

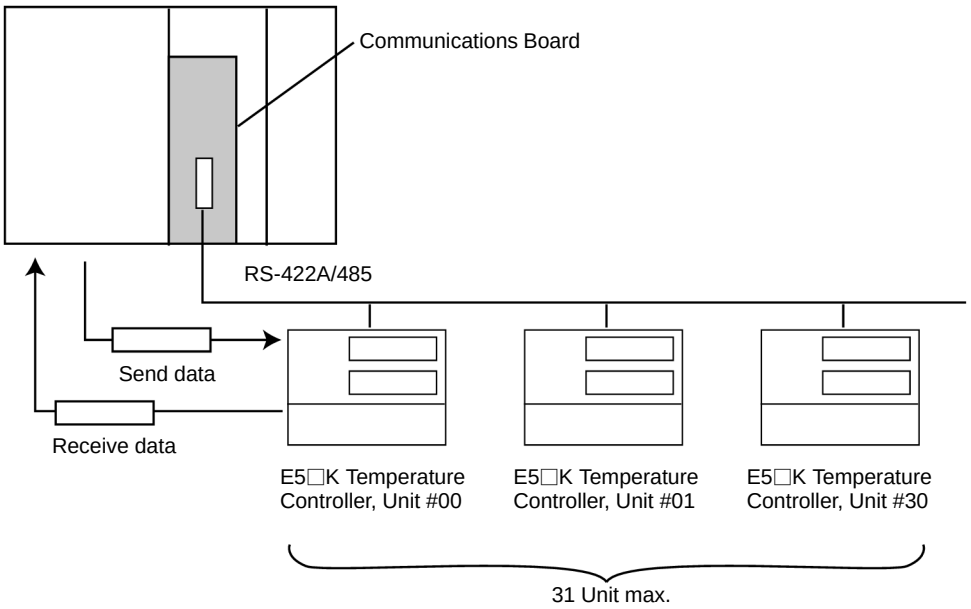

Send Data Word Allocation (2nd Operand of PMCR)

First word of send data	+0	Number of send data words	
	+1	(Undefined)	Unit No.

Offset	Contents (data format)	Data
+0	Number of send data words (4 digits BCD)	0002 (fixed)
+1	Unit No. (2 digits BCD)	00 to 31

Receive Data Word Allocation (3rd Operand of PMCR)

Receive data storage words		
	+0	Number of receive data words
	+1	Process value

Offset	Contents (data format)	Data
+0	Number of receive data words (4 digits BCD)	0002
+1	Process value (4 digits BCD)	Scaling lower limit to upper limit

The following operands would be used to read the present value of Unit #3 and store it in DM 0201.

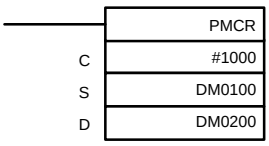

C: Control Data

	15 12	11 8	7 4	3 0
C	1	0	0	0

1: Port A 000: Sequence #000

S: First output word (command control data): DM0100

	15 0	
S: DM0100	0 0 0 2	No. of send words: 2
S+1: DM0101	0 0 0 3	Unit No.: 3

D: First input word : DM0200

	15 0	
D: DM0200	0 0 0 2	No. of received words: 2
D+1: DM0201	Present value	Present value: 4-digit BCD

Application Example: E5□K Digital Controller Write (Sequence 050)

This example uses the following system. The unit number of the Temperature Controller and the target value is specified and a command to change the target value of the Controller is sent.

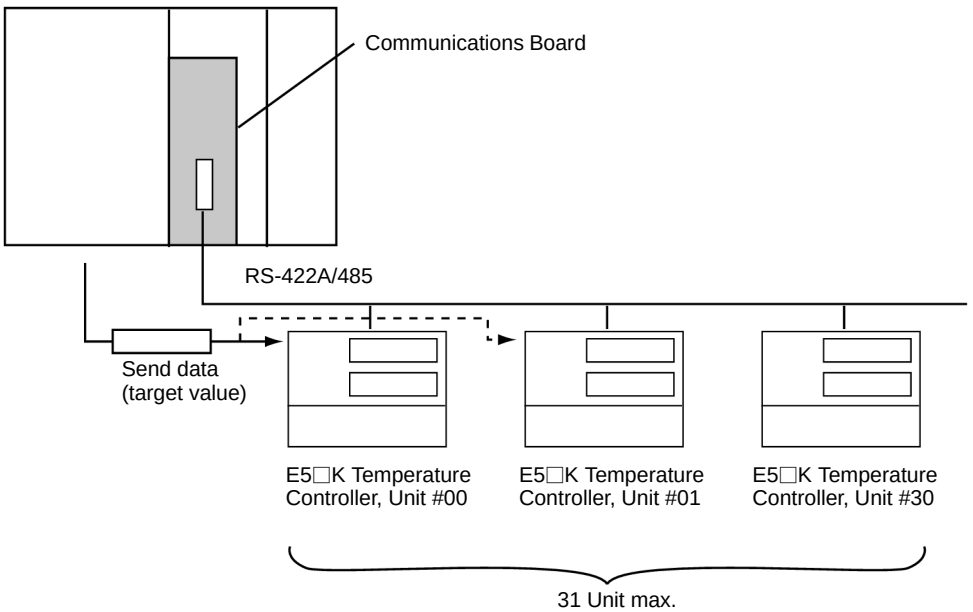

Send Data Word Allocation (2nd Operand of PMCR)

First word of send data			
	+0	Number of send data words	
	+1	(Undefined)	Unit No.
	+2	set point	

Offset	Contents (data format)	Data
+0	Number of send data words (4 digits BCD)	0003 (fixed)
+1	Unit No. (2 digits BCD)	00 to 31
+2	Set point (4 digits BCD)	Set point lower limit to upper limit

Receive Data Word Allocation (3rd Operand of PMCR)

None.

The following operands would be used to write the target value (300°C) contained in DM 0102 to Unit #5.

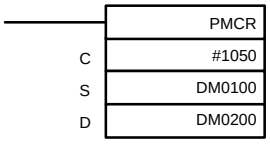

C: Control Data

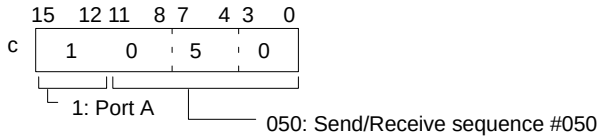

S: First output word
S: DM0100

	15 … 0		
S: DM0100	0 0 0 3	No. of send words:	3
S+1: DM0101	0 0 0 5	Unit No.:	5
S+2: DM0102	0 3 0 0	Target value:	300

D: First input word

D: DM 0200 (dummy address)
A dummy address is set because no data will be received. Nothing will be written to DM 0200 and it can be used for another purpose.

Application Example: V500/V520 Bar Code Reader (Sequence 350)

This example uses the following system. A command is sent to the Bar Code Reader to start a reading operation.

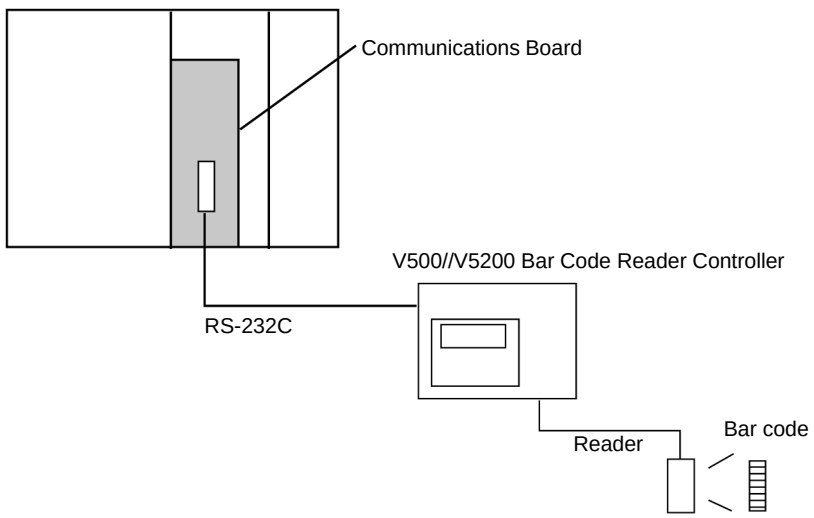

Send Data Word Allocation (2nd Operand of PMCR)

None.

Receive Data Word Allocation (3rd Operand of PMCR)

None.

The following operands would be used to start a reading operation for the Bar Code Reader.

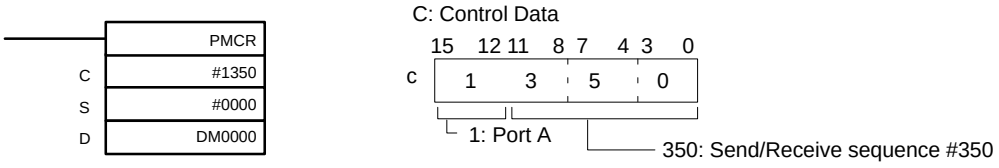

S: First output word

S: #0000
S must be set to #0000 when there is no send data.

D: First input word

D: DM 0000 (dummy address)
A dummy address is set because no data will be received. Nothing will be written to DM 0000 and it can be used for another purpose.

PMCR Execution

1, 2, 3...

1. Set the required first word for the send data.

   Note The appendices show the structure required for each system protocol provided with the Protocol Support Software. A first send word and receive word are assigned for each communications sequence for each protocol. Send data must be set according to the word allocation for sequences that require send word allocation. In the receive word allocation, the word allocation of the data to be received by the sequence is indicated. When receiving data, check the required data allocation using the receive word allocation.

2. Execute the PMCR instruction while no other PMCR instruction is being executed (the PMCR instruction will not be executed when another PMCR instruction is already being executed).

   Note Check the Port A Instruction Execution Flag for the PMCR instruction at SR 28908 (port A) and SR 28912 (port B).

3. When SR 28908 (port A) or SR 28912 (port B) goes OFF, execution of the PMCR instruction has been completed.

Ladder Diagram Structure

Only one PMCR instruction can be executed at the same time. To ensure that a PMCR instruction is not executed before execution of another PMCR instruction has been completed, the Port A/B Instruction Execution Flag (SR 28908 or SR 28912) is used in a NC condition in the execution condition for PMCR. An OFF condition for the Flag can then be used to activate processing to read the

results of sequence execution, handle errors, etc. The basic structure of this type of programming is shown below for port A.

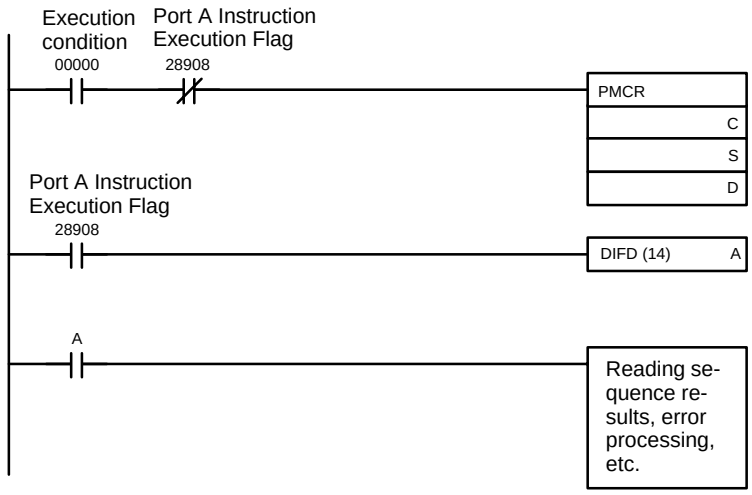

Ladder Diagram Example

In the following ladder diagram, sequence number 000 (E5□K Digital Controller Read) is executed through PMCR to read the PV. When sequence execution has been completed, the PV is transferred to words to store it.

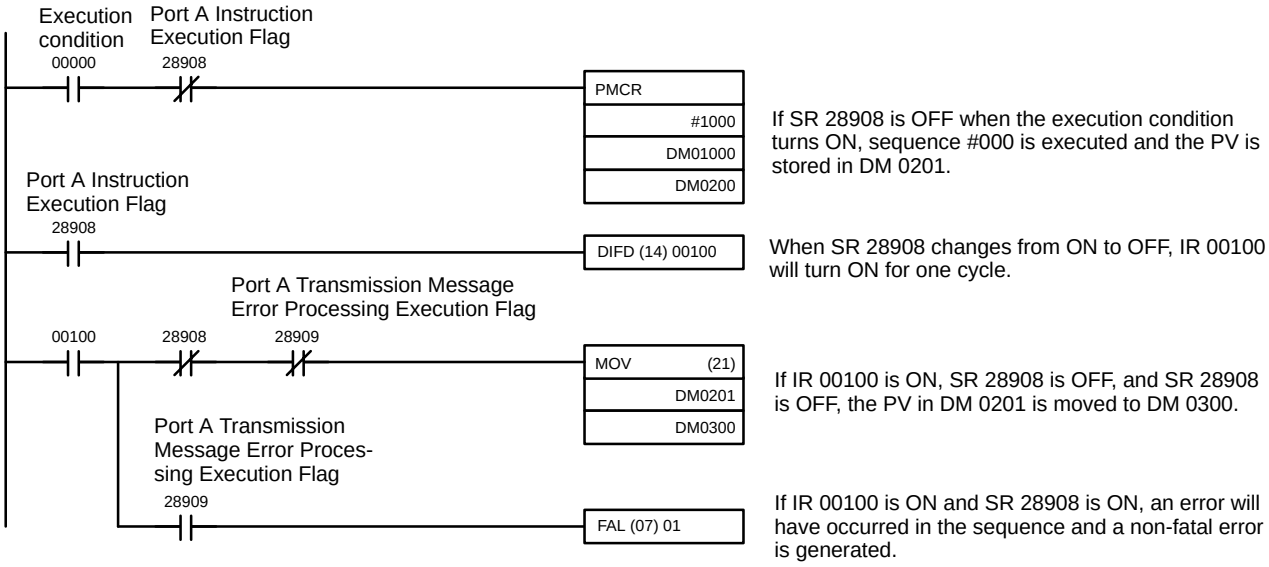

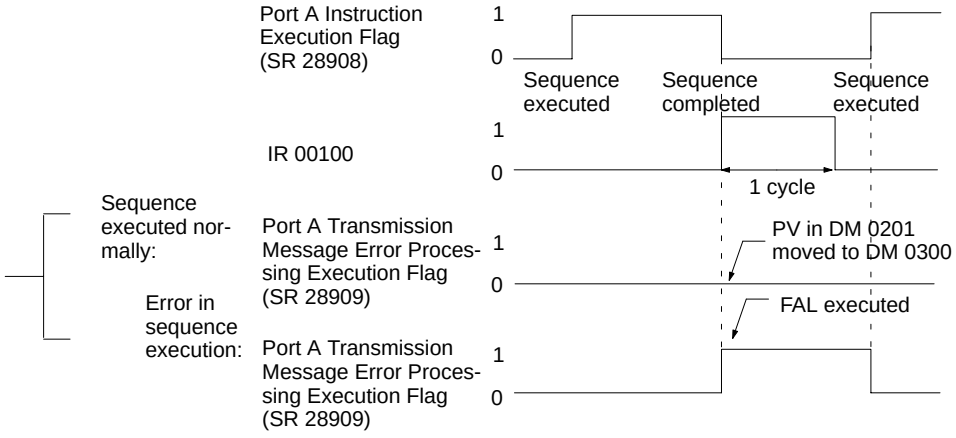

Sequence Completion

The following examples show execution of End at normal completion of sequence and Abort when sequences end in errors. If End and Abort are set in this way, the Sequence Abort Flag and Sequence End Flag can be used to determine whether or not sequences have completed normally.

The Step Error Processing Flag shows the status of individual steps and not the status of the overall sequence. The Step Error Processing Flag will turn ON when any one step in a sequence ends in an error and will remain ON even if the next step in the sequence ends normally. It is thus not always possible to use the Step Error Processing Flag to determine if the overall sequence executed successfully.

Example 1

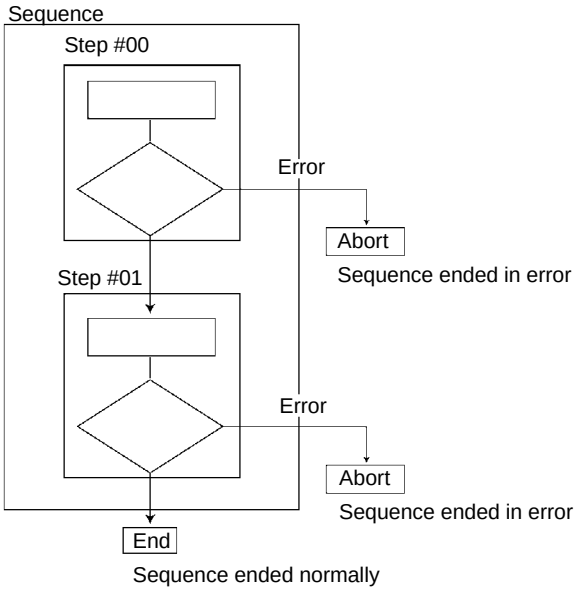

Sequence Executed Normally

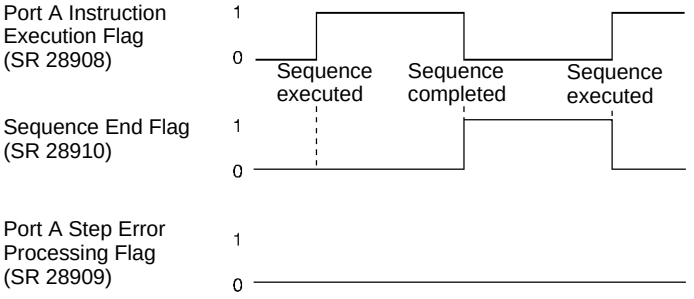

Error in Sequence Execution

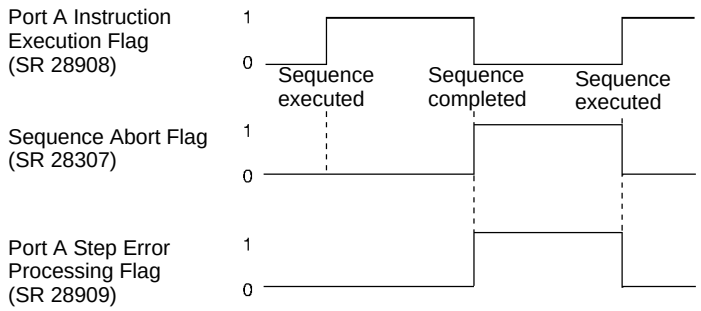

Example 2

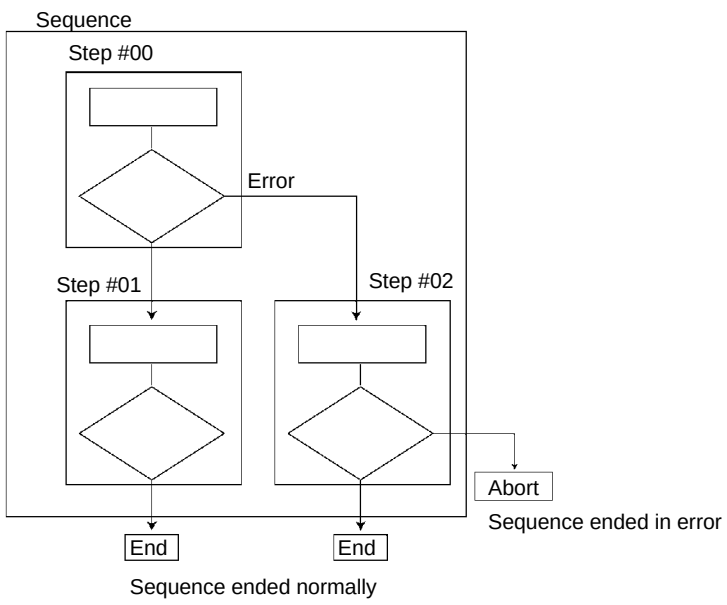

Sequence Executed Normally

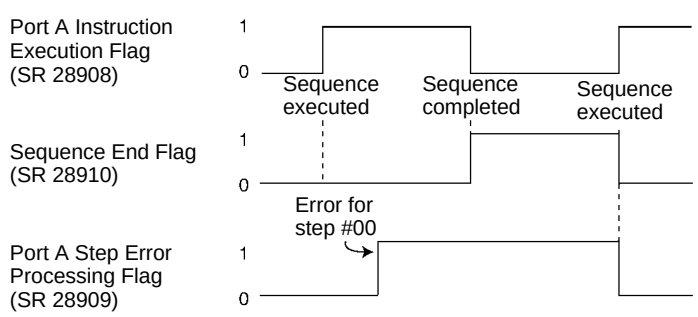

Error in Sequence Execution

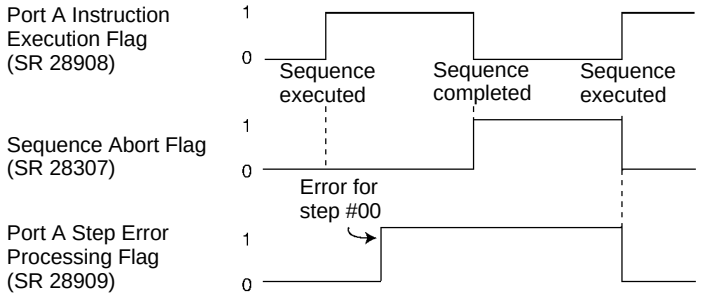

Flag and Memory Area Status for Protocol Macros

The following table describes the operation and contents of bits and memory area words used with protocol macros. Refer to *2-4 Troubleshooting* for details on Error Flags.

Name	Name	Port A	Port B	Read/ Write
Instruction Execution Flag	Turns ON when PMCR is executed, but will remain OFF is execution fails. Turns OFF when PMCR execution is aborted or completed.	SR 28908	SR 28912	R
Step Error Processing Flag	Turns ON when an error occurs in execution of a step. Turns OFF when retry successfully executes the step. Remains OFF unless an error occurs.	SR 28909	SR 28913	R
Sequence End Flag	Turns ON when sequence execution is completed normally (End Processing: See note). (The Instruction Execution Flag must be OFF for the status of the Sequence End Flag to be valid). Remains OFF unless normal End processing is executed for the sequence. This Flag can be used to determine if a sequence ended normally is End is set for normal sequence completion and Abort is set for error completion.	SR 28910	SR 28914	R
Sequence Abort Flag	Turns ON when sequence execution is aborted (Abort Processing: See note). (The Instruction Execution Flag must be OFF for the status of the Sequence End Flag to be valid). Remains OFF unless the sequence is aborted.	SR 28307	SR 28315	R
Abort Bit	Turn ON from the ladder diagram program to abort a sequence that is being executed.	SR 28911	SR 28915	W
Restart Bit	Turn ON from a Programming Device or the ladder diagram program to initialize the send/receive buffers and SR 283 to SR 285. This Bit can be used to initialize the above memory/buffer contents after completion of a sequence. This Bit will not cancel a sequence that is being executed. This Bit will automatically reset to OFF.	SR 28900	SR 28901	W
Executed Reception Matrix Case No. (0 to F)	Contains the number of the reception case selected for the reception message when a reception matrix is set. SR 28715/SR 28815 will turn ON when a number is stored.	SR 28700 to SR 28703	SR 28800 to SR 28803	R
Executed Step No. (0 to F)	Contains the number of the step that was just executed. SR 28715/SR 28815 will turn ON when a number is stored.	SR 28704 to SR 28707	SR 28804 to SR 28807	R
SR 287/SR 288 Stored Flag	Turns ON when a reception matrix case number or step number is stored in SR 287 or SR 288.	SR 28715	SR 28815	R
Repeat Counter Present Value	Contains the present value of the step repeat counter, N.	SR 28400 to SR 28407	SR 28500 to SR 28507	R

Using the Abort Bits (SR 28911/SR 28915)

The Instruction Execution Flag will turn OFF as soon as the Abort Bit is turned ON from the user program. If the Abort Bit is turned OFF in the user program as soon as the Instruction Execution Flag turns OFF, Abort Processing will not be executed. Be sure that the Abort Bit remains ON at least 15 ms + the CPU Unit's cycle time.

Also, if an NC condition is programmed using the Instruction Execution Flag as the execution condition for PMCR, then the PMCR instruction may be executed during Abort Processing, causing a FAL-9C error. Do not allow PMCR to be

executed for at least 15 ms + the CPU Unit's cycle time after the Abort Bit is turned ON.

Example

The Forced Abort Flag is turned ON and the 30 ms period elapses, then the Forced Abort Flag is turned OFF and simultaneously the PMCR instruction interlock is released.

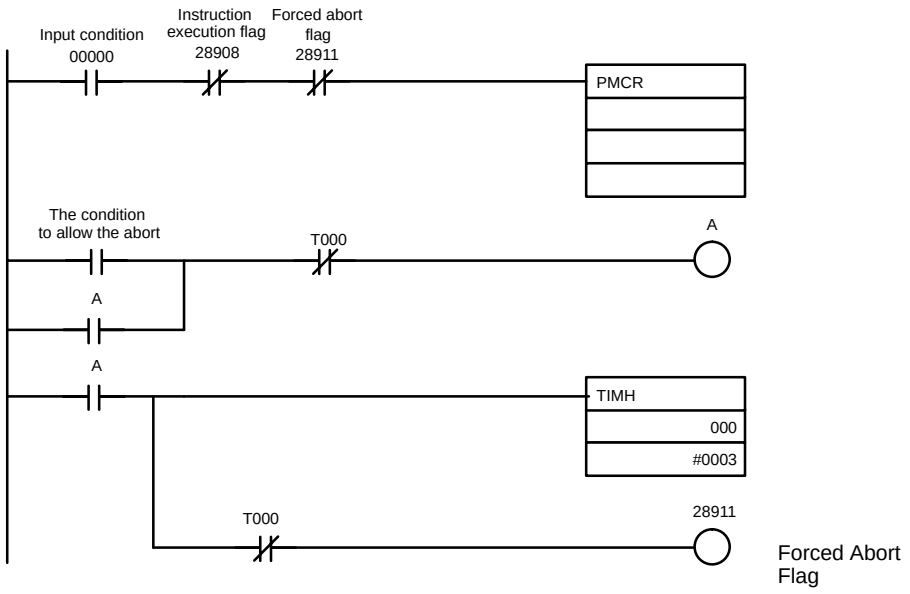

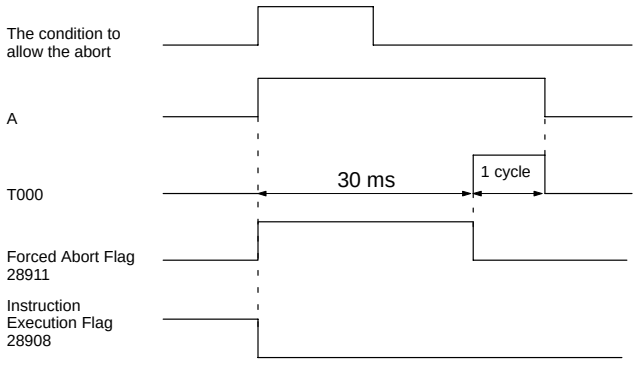

Transmission Method

Basically, there are two transmission methods: Half duplex and full duplex. With half-duplex transmissions, data can be transferred between two devices in only one direction at a time (either A → B or B → A). With full-duplex transmissions, data can be transferred in both directions at the same time (A ↔ B). C200HX/HG/HE(-Z) protocol macros support only half-duplex transmissions. For this reason, the following restriction applies: The receive buffer is cleared immediately before sequence execution and immediately after the send operation (for the send command or the send/receive command) is completed. Therefore, any data received just before or during the send operation will not be processed as receive data.

Transmission method	Times at which receive buffer is cleared	Times at which data can be received	Character trace	Timing chart
Half duplex	Immediately before execution of send/receive sequence, and immediately after completion of send operation for the send command or the send/receive command.	From end of send operation until end of receive operation, or from end of send operation until immediately before next send operation.	Trace performed for all data transferred during execution of character trace.	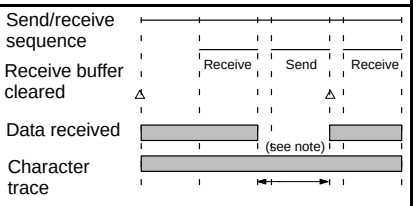

Note Although data received before the completion of the send operation is lost, it is still recorded in the character trace.

Time Delay

When a send operation is performed for half-duplex communications, there is actually a time delay (t; see table below) between the completion of data send processing and the completion of the send operation. Therefore, if the response from the connected device is so fast that it is received between the time that the data is sent (with the communications command) and the time send operation is completed, the portion of the response data received in this interval will not be processed as receive data.

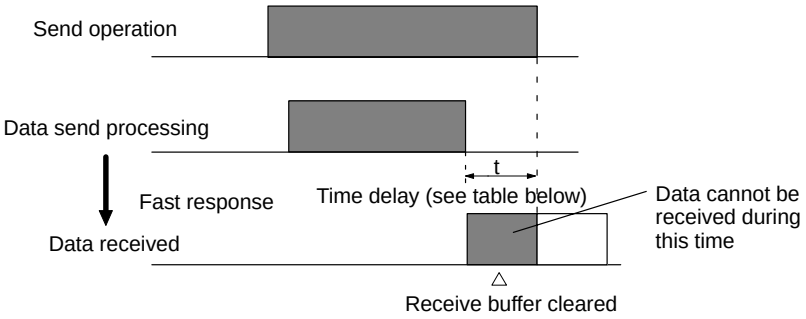

Time Delay (t)

Baud rate (bps)	Time delay (unit: ms)
1,200	30
2,400	15
4,800	8
9,600	5
19,200	3

Note The above time delays are approximate values. They may be longer depending on the protocol macro processing.

Error Flags for Overrun Errors, Framing Errors, and Parity Errors

With the protocol macro function, when any of the above errors are detected, the receive data is stored together with error information data in the internal receive buffer. Whether or not the error flags will turn ON depends on the following conditions.

- When error information data is included in the data that matches the expected receive message:

  When the receive operation is performed, the receive buffer is searched, and if data matching the expected receive message is found, it is handled as receive data. If this reception data contains error information, each error flag will turn ON. In the following example, 100 bytes of data matching the expected receive message were received.

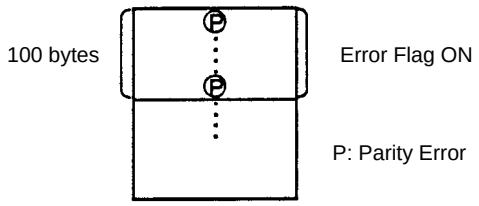

- When error information data is included in data which does not match the expected receive message:

  Even if the receive data contains error information data, if the data does not match the expected receive message, the data will be ignored and the error flag status will not change. The example below shows data which contained parity errors but did not match the expected receive message.

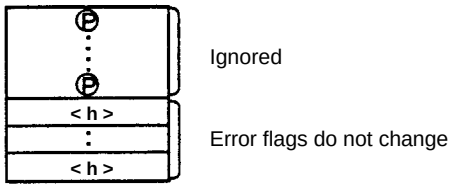

  All error information obtained from the receive buffer, however, will be stored as trace data within the trace data capacity range.

Using the Restart Bits (SR 28900/SR 28901)

The Restart Bits can be used to initialize the communications ports. The port will be initialized the next time protocol macro execution is completed after a Restart Bit is turned ON from the ladder diagram or from a Programming Device. The Restart Bits will automatically turn OFF when restart processing has been completed. The Restart Bits will not end a protocol macro even if they are turned ON during protocol macro execution.

Do not allow PMCR to be executed for at least 15 ms + the CPU Unit's cycle time after a Restart Bit is turned ON. This time will be required to complete restart processing for the Communications Board. If the PMCR instruction executed during restart processing, a FAL 9C error will occur and the protocol macro may not be executed normally.

Echoback Disable Function

When a communications error or retries occur with RS-485 2-wire communications, take the countermeasure explained below. This countermeasure, howev-

er is possible only for models of lot numbers 0140 or later. The meaning of lot numbers is shown below.

Lot No: **0140** Manufactured on April 1st, 2000.

- The year is indicated with the last digit. In this case, “0” indicates “2000.”
- Month of manufacture. October, November, and December are indicated with X, Y, and Z respectively. In this case, the month is “April.”
- Day of manufacture. In this example, the day is “1.”

When the serial communications mode for the Communications Board’s ports is set to Protocol Macro Mode, and the transmission control parameter in the protocol macro data is set to modem control, the following bits/flags in the SR Area will be enabled.

Bit/Flag	Name/Operation	Notes
SR 28906	Port A Echoback Disable Bit 1: Echoback disabled 0: Echoback enabled	Settings sent to the Communications Board
SR 28907	Port B Echoback Disable Bit 1: Echoback disabled 0: Echoback enabled	Settings sent to the Communications Board
SR 28606	Port A Echoback Disabled Flag 1: Echoback disabled 0: Echoback enabled	Used to monitor the setting of the Communications Board.
SR 28607	Port B Echoback Disabled Flag 1: Echoback disabled 0: Echoback enabled	Used to monitor the setting of the Communications Board.

In RS-485 2-wire communications, if an Echoback Disable Bit (port A: SR 28906; port B: SR 28907) is set to 1 (ON), data sent from the respective Communications Board’s port will be prevented (via the software) from returning to the receive line of the local node while the RS signal is 1 (ON).

In situations where communications errors and retries occur in RS-485 2-wire communications, incorporate programming in the ladder programming that will turn these bits ON as required. When echoback is disabled, data received while data is being sent (i.e., the RS signal is ON) is neither processed as receive data or recorded as trace data. If either of the Echoback Disable Bits are turned ON while the ladder program is running, this is reflected in the Communications Boards, but, conversely, the OFF status is only reflected in the Communications Boards at the start of the ladder program. Therefore, during execution of protocol macros, echoback cannot be disabled by simply turning the Echoback Disable Bits ON. Either go into PROGRAM mode once, before restarting the ladder program, or turn the power supply OFF and ON again.

The status of each of the Echoback Disable Bits can be monitored using the Echoback Disabled Flags (port A: SR 28606; port B: SR 28607).

Example: Ladder Diagram

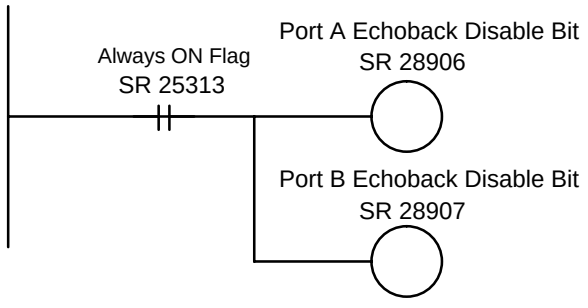

Note RS-485 2-wire Communications and Echoback

When 2-wire communications are performed, the send line and the receive line use the same pair of wires. Therefore, send data will come back along the receive line (refer to the diagram below). In this manual, returning the send data is referred to an echoback.

So that this echoback data can be received and sent without the user having to set an expected receive message, the protocol macro functions are designed so that a receive trace is performed in the firmware of the Communications Board and then the data is discarded.

Because of delays in echoback timing, and because of inconsistencies in the processing time for the Communications Board, however, it can become difficult to distinguish between actual responses and echoback, and it is possible that the echoback data is mistaken for an expected receive message, resulting in a communications error. This problem can be prevented by turning ON the appropriate Echoback Disable Bit so that receive processing is not performed for echoback data.

Two-wire Communications Using the RS-422/485 Port on the C200HW-COM06-EV1

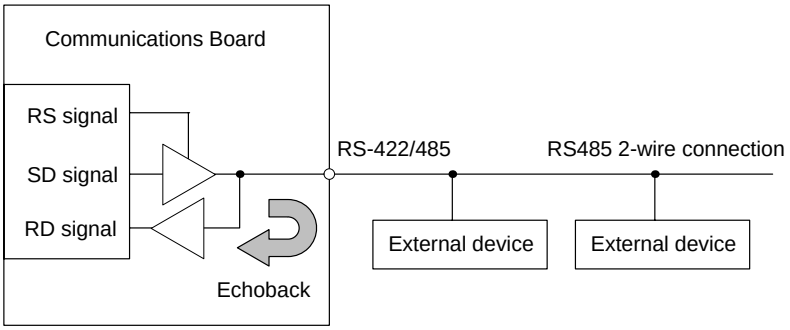

Two-wire Communications Using the RS-232C Port on the C200HW-COM04-EV1 to C200HW-COM06-EV1 and the NT-AL001-E

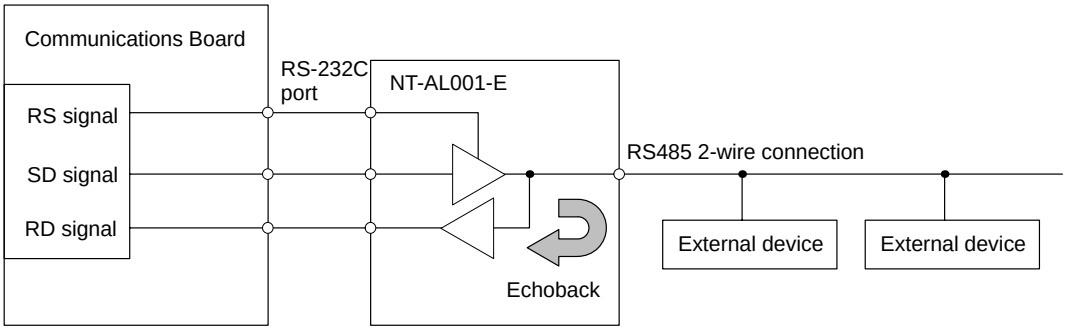

Timing for Receive/Send in 2-wire Communications

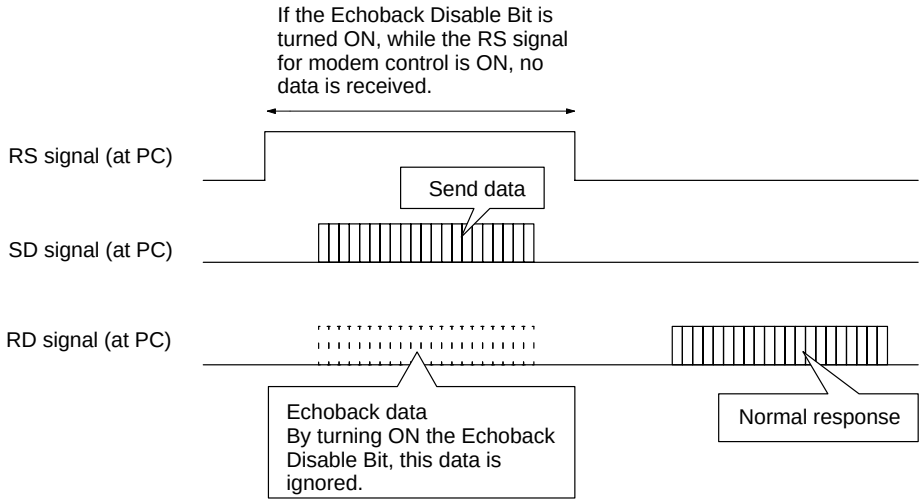

Abort Flags

The status of bits SR 28900 to SR 28907, SR 28911 and SR 28915 is held when power is turned OFF. If bits SR 28911 and SR 28915 (Abort Flags for port A and port B) are ON, send/receive cannot be executed. Either turn OFF these bits from a Programming Device, or include a section in the ladder program that will turn them OFF as shown below.

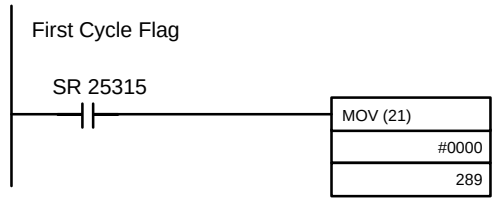

2-4 Troubleshooting

When an error occurs during operation of the Communications Board, the error is notified by displaying it in LED of the PC or outputting the error code to the controller. The error type and error section are also stored in the Communications Board related data area also. When an error occurs in the Communications Board, take the appropriate action by referencing the table below.

Note
1. When a system FAL-9C error occurs, ERR/ALM LED of the PC will flash.
2. When a system FAL-9C error occurs, the Communications Board will be disabled.
3. When a system FAL-9B error occurs, operation of the Communications Board can be continued.

Condition	Indication	Cause	Action
Communications Board will not operate.	RDY indicator does not light.	Communications Board failure.	Replace the Communications Board and toggle the power supply.
System FAL9C error	SR 26800 = ON	Communications Board failure.	Replace the Communications Board and toggle the power supply.
	SR 26801 = ON and RDY indicator not lit.	Error occurring due to non-recognition of the RS-232C port at start-up. Normally occurs due to a hardware error.	Replace the Communications Board and toggle the power supply.
	SR 26802 = ON	Protocol data is in error.	Correct the protocol data using the Protocol Support Software.
System FAL9C error and system FAL9B error	SR 26815 = ON RDY indicator flashing.	a) System Setup for the Communications Board (DM6550 to DM6559) is corrupt. SR 26813 = ON (port B) SR 26814 = ON (port A) OR b) The Communications Board does not support protocol macros.	a) Correct the System Setup and restart the system. b) Use a Communications Board that supports protocol macros.
System FAL9C error when PMCR is executed and the Instruction Execution Flag does not turn ON. Port A = SR 28908 Port B = SR 28912	SR 26811= ON (Port B) SR 26812= ON (Port A) Error Code SR 28608 to SR 28611 (Port A) SR 28612 to SR 28615 (Port B)	A protocol macro error related to the PMCR instruction has occurred. Troubleshoot using the following error codes.	
		Error Code = 1 a)The protocol macro mode has not been set in the System Setup for the Communications Board (DM6550 to DM6559). b) The Communications Board does not support protocol macros.	a) Correct the System Setup and restart the system. b) Use a Communications Board that supports protocol macros.
		Error Code = 2 The specified sequence number does not exist.	Correct the PMCR operands or transfer the sequence to the Communications Board.
		Error Code = 3 The received data was too large to be written into I/O memory.	Use a different area or less data.
		Error Code = 4 The protocol data in the Communications Board is bad.	Rewrite the protocol data using the Protocol Support Software.
		Error Code = 5 PMCR instruction executed during port initialization.	Include an interval between port initialization, such as for a port restart, and execution of the PMCR instruction.
PMCR instruction not executed. System FAL9C error not generated.		Abort Flag SR 28911 (for port A) or SR 28915 (for port B) is ON.	Turn OFF the Abort Flags SR 28911 and SR 28915.

Condition	Indication	Cause	Action
PMCR executed but data not sent/ received properly. The Instruction Execution Flag turned ON. Port A = SR 28908 Port B = SR 28912	SR 28909= ON (Port A) SR 28913= ON (Port B)	Step error processing is being executed during a sequence, possibly because of an unexpected receive message.	Find the cause of the error and correct it.
	SR 28304= ON (Port A) SR 28312= ON (Port B)	A communications error occurred during message reception.	Check the communications path between the devices.
Communications not possible with other devices.	SR 28304= ON (Port A) SR 28312= ON (Port B)	There is a problem with the communications path between the RS-232C port (A or B) and the device or communications parameters are not set correctly. Refer to the error codes in the following words. SR 28300 to SR 28303 (Port A) SR 28608 to SR 28611 (Port B)	Restart the port, or execute RXD or PMCR to initialize memory. Check the communication path. Check the communications parameters.
PMCR, RXD, and TXD cannot be executed.	ER Flag (SR 25503) = ON	The instruction operands may be incorrect.	Correct the operands.

Appendices
System Protocols

The following appendices describe the protocols that are provided with the Communications Board and the Protocol Support Software/Tool (sold separately). These sequences can be executed by specifying the sequence number as an operand in the PMCR instruction.

A E5□K Digital Controller Read Protocol 59
B E5□K Digital Controller Write Protocol 77
C E5ZE Temperature Controller Read Protocol 93
D E5ZE Temperature Controller Write Protocol 115
E E5□J Temperature Controller Protocol 135
F ES100□ Digital Controller Protocol 149
G K3T□ Intelligent Signal Processor Protocol 191
H V500/V520 Bar Code Reader Protocol 213
I 3Z4L Laser Micrometer Protocol 225
J Visual Inspection System Protocol 257
K V600/V620 ID Controller Protocol 275
L Hayes Modem AT Command Protocol 311

Appendix A
E5□K Digital Controller Read Protocol

The E5□K Digital Controller Read Protocol reads and controls various parameters in remote mode for the Controller connected to the Communications Board via RS-232C or RS-485 cable.

Structure of the Protocol

The following table shows the structure of the E5□K Digital Controller Read Protocol.

Sequence No.	Communications sequence name	Function	Ladder interface	
			Send word allocation	Receive word allocation
000	Read process value	Reads the process value.	Yes	Yes
001	Read set point during SP ramp	Reads the set point during SP ramp.	Yes	Yes
002	Read MV	Reads the MV (heating, cooling).	Yes	Yes
003	Read set point	Reads the set point.	Yes	Yes
004	Read alarm value	Reads alarm value 1, 2.	Yes	Yes
005	Read proportional band, integral time, and derivative time	Reads the proportional band, integral (reset) time, and derivative (rate) time	Yes	Yes
006	Read cooling coefficient	Reads the cooling coefficient.	Yes	Yes
007	Read dead band	Reads the dead band.	Yes	Yes
008	Read manual reset value	Reads the manual reset value.	Yes	Yes
009	Read hysteresis	Reads the hysteresis (heating, cooling).	Yes	Yes
010	Read control period	Reads the control period (heating, cooling).	Yes	Yes
011	Read SP ramp time unit and set value	Reads the SP ramp time unit and SP ramp set value.	Yes	Yes
012	Read LBA detection time	Reads the LBA detection time.	Yes	Yes
013	Read MV at stop and PV error	Reads the MV at stop and the MV at PV error.	Yes	Yes
014	Read MV limits	Reads the MV limits.	Yes	Yes
015	Read input digital filter	Reads the input digital filter.	Yes	Yes
016	Read alarm hysteresis	Reads the alarm 1, 2 hysteresis.	Yes	Yes
017	Read input shifts	Reads the input shift limits.	Yes	Yes
018	Read level 0 parameters	Reads parameters in level 0.	Yes	Yes
019	Read level 1 parameters 1	Reads parameters in level 1.	Yes	Yes
020	Read level 1 parameters 2	Reads parameters in level 1.	Yes	Yes
021	Read level 2 parameters 1	Reads parameters in level 2.	Yes	Yes
022	Read level 2 parameters 2	Reads parameters in level 2.	Yes	Yes
023	General-purpose read	Reads the value of the specified parameter.	Yes	Yes

Note Ladder Interface Settings

YES: User settings are required for the 2nd or 3rd operands of PMCR.

NO: Send word allocation: Set the constant 0000 for the 2nd operand (S).
Receive word allocation: Set a dummy word (e.g., DM0000) address for the 3rd operand (D).

Connection Configuration

The connection configuration for using the E5□K Digital Controller Read Protocol is shown below.

RS-232C Connection

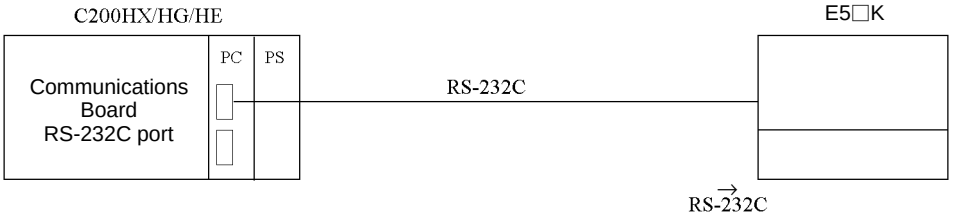

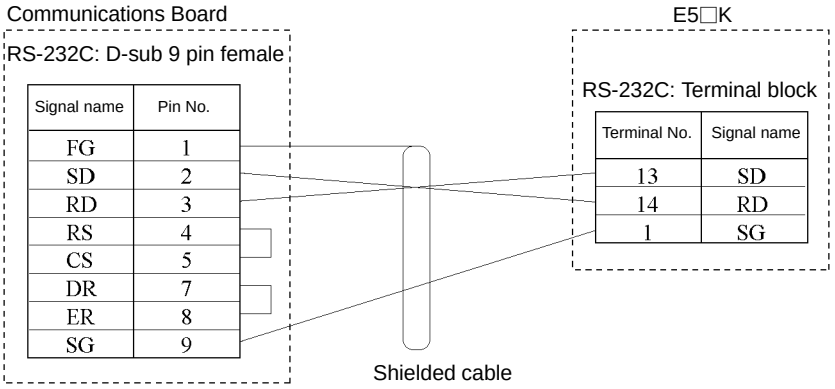

Note 1. The communications configuration is a one-to-one configuration and the maximum cable length is 15 m.
2. Use a shielded twisted-pair cable (AWG28i or greater) for the cable.

RS-485 Connection

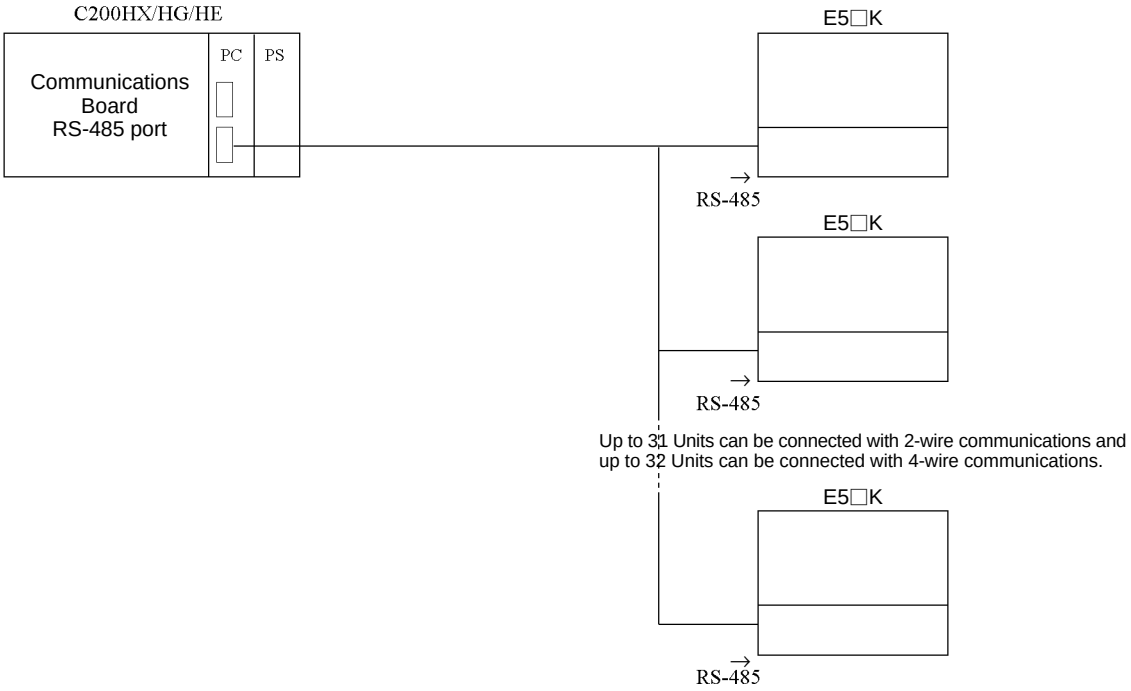

Note 1. The communications configuration is a one-to-one configuration or a one-to-N configuration. In the one-to-N configuration, up to 32 units including the Communications Board can be connected.
2. The maximum cable length is 500 m. Use a shielded twisted-pair cable for the cable (AWG28i or greater).

3. Connect a terminator only at both ends of the transmission path. For instance, in the example shown below, connect a terminator to the Communications Board and unit No.30 and do not connect any terminator to units No.0 to No.29. Use a resistance of 120Ω (1/2W) for the terminators (the total resistance of both ends must be 54Ω or more).

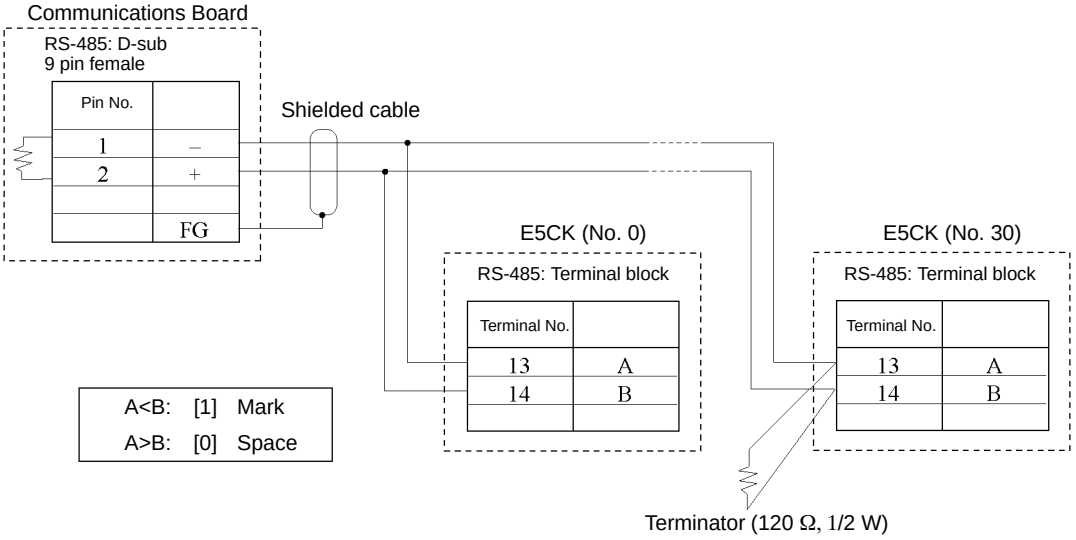

Read Process Value (Sequence No. 000)

Reads the process value and stores the results in the specified words.

Send Data Word Allocation (2nd Operand of PMCR)

First word of send data	+0	Number of send data words	
	+1	(Undefined)	Unit No.

Offset	Contents (data format)	Data
+0	Number of send data words (4 digits BCD)	0002 (fixed)
+1	Unit No. (2 digits BCD)	00 to 31

Receive Data Word Allocation (3rd Operand of PMCR)

Receive data storage words	+0	Number of receive data words
	+1	Process value

Offset	Contents (data format)	Data
+0	Number of receive data words (4 digits BCD)	0002
+1	Process value (4 digits BCD)	Scaling lower limit to upper limit

Read Set Point during SP Ramp (Sequence No. 001)

Reads the set point during the SP ramp and stores the results in the specified words.

Send Data Word Allocation (2nd Operand of PMCR)

First word of send data	+0	Number of send data words	
	+1	(Undefined)	Unit No.

Offset	Contents (data format)	Data
+0	Number of send data words (4 digits BCD)	0002 (fixed)
+1	Unit No. (2 digits BCD)	00 to 31

Receive Data Word Allocation (3rd Operand of PMCR)

Receive data storage words	+0	Number of receive data words
	+1	Set point during SP ramp

Offset	Contents (data format)	Data
+0	Number of receive data words (4 digits BCD)	0002
+1	Set point during SP ramp (4 digits BCD)	Set point lower limit to upper limit

Read MV (Sequence No. 002)

Reads the MV (manipulated variable) for heating and cooling and stores the results in the specified words.

Send Data Word Allocation (2nd Operand of PMCR)

First word of send data	+0	Number of send data words	
	+1	(Undefined)	Unit No.

Offset	Contents (data format)	Data
+0	Number of send data words (4 digits BCD)	0002 (fixed)
+1	Unit No. (2 digits BCD)	00 to 31

Receive Data Word Allocation (3rd Operand of PMCR)

Receive data storage words	+0	Number of receive data words
	+1	MV (heating)
	+2	MV (cooling)

Offset	Contents (data format)	Data
+0	Number of receive data words (4 digits BCD)	0003
+1	MV (heating) (4 digits BCD)	F050 to 1050, 0000 to 1050 for heating/cooling control F indicates a negative value.
+2	MV (cooling) (4 digits BCD)	F050 to 1050 F indicates a negative value.

Read Set Point (Sequence No. 003)

Reads the set point and stores the results in the specified word.

Send Data Word Allocation (2nd Operand of PMCR)

First word of send data	+0	Number of send data words	
	+1	(Undefined)	Unit No.

Offset	Contents (data format)	Data
+0	Number of send data words (4 digits BCD)	0002 (fixed)
+1	Unit No. (2 digits BCD)	00 to 31

Receive Data Word Allocation (3rd Operand of PMCR)

Receive data storage words	+0	Number of receive data words
	+1	Set point

Offset	Contents (data format)	Data
+0	Number of receive data words (4 digits BCD)	0002
+1	Set point (4 digits BCD)	Set point lower limit to upper limit

Read Alarm Value (Sequence No. 004)

Reads alarm value 1 and alarm value 2 and stores the results in the specified words.

Send Data Word Allocation (2nd Operand of PMCR)

First word of send data	+0	Number of send data words	
	+1	(Undefined)	Unit No.

Offset	Contents (data format)	Data
+0	Number of send data words (4 digits BCD)	0002 (fixed)
+1	Unit No. (2 digits BCD)	00 to 31

Receive Data Word Allocation (3rd Operand of PMCR)

Receive data storage words	+0	Number of receive data words
	+1	Alarm value 1
	+2	Alarm value 2

Offset	Contents (data format)	Data
+0	Number of receive data words (4 digits BCD)	0003
+1	Alarm value 1 (4 digits BCD)	A999 to 9999 F indicates a negative value and A indicates –1.
+2	Alarm value 2 (4 digits BCD)	A999 to 9999 F indicates a negative value and A indicates –1.

Read Proportional Band, Integral Time, and Derivative Time (Sequence No. 005)

Reads the proportional band, integral time, and derivative time and stores the results in the specified words.

Send Data Word Allocation (2nd Operand of PMCR)

First word of send data	+0	Number of send data words	
	+1	(Undefined)	Unit No.

Offset	Contents (data format)	Data
+0	Number of send data words (4 digits BCD)	0002 (fixed)
+1	Unit No. (2 digits BCD)	00 to 31

Receive Data Word Allocation (3rd Operand of PMCR)

Receive data storage words	+0	Number of receive data words
	+1	Proportional band
	+2	Integral time
	+3	Derivative time

Offset	Contents (data format)	Data
+0	Number of receive data words (4 digits BCD)	0004
+1	Proportional band (4 digits BCD)	0000 to 9999
+2	Integral time (4 digits BCD)	0000 to 3999
+3	Derivative time (4 digits BCD)	0000 to 3999

Read Cooling Coefficient (Sequence No. 006)

Reads the cooling coefficient and stores the results in the specified words.

Send Data Word Allocation (2nd Operand of PMCR)

First word of send data	+0	Number of send data words	
	+1	(Undefined)	Unit No.

Offset	Contents (data format)	Data
+0	Number of send data words (4 digits BCD)	0002 (fixed)
+1	Unit No. (2 digits BCD)	00 to 31

Receive Data Word Allocation (3rd Operand of PMCR)

Receive data storage words	+0	Number of receive data words
	+1	Cooling coefficient

Offset	Contents (data format)	Data
+0	Number of receive data words (4 digits BCD)	0002
+1	Cooling coefficient (4 digits BCD)	0001 to 9999

Read Dead Band (Sequence No. 007)

Reads the dead band and stores the results in the specified words.

Send Data Word Allocation (2nd Operand of PMCR)

First word of send data	+0	Number of send data words	
	+1	(Undefined)	Unit No.

Offset	Contents (data format)	Data
+0	Number of send data words (4 digits BCD)	0002 (fixed)
+1	Unit No. (2 digits BCD)	00 to 31

Receive Data Word Allocation (3rd Operand of PMCR)

Receive data storage words	+0	Number of receive data words
	+1	Dead band

Offset	Contents (data format)	Data
+0	Number of receive data words (4 digits BCD)	0002
+1	Dead band (4 digits BCD)	A999 to 9999 F indicates a negative value and A indicates –1.

Read Manual Reset Value (Sequence No. 008)

Reads the manual reset value and stores the results in the specified words.

Send Data Word Allocation (2nd Operand of PMCR)

First word of send data	+0	Number of send data words	
	+1	(Undefined)	Unit No.

Offset	Contents (data format)	Data
+0	Number of send data words (4 digits BCD)	0002 (fixed)
+1	Unit No. (2 digits BCD)	00 to 31

Receive Data Word Allocation (3rd Operand of PMCR)

Receive data storage words	+0	Number of receive data words
	+1	Manual reset value

Offset	Contents (data format)	Data
+0	Number of receive data words (4 digits BCD)	0002
+1	Manual reset value (4 digits BCD)	0000 to 1000

Read Hysteresis (Sequence No. 009)

Reads the hysteresis for heating and for cooling and stores the results in the specified words.

Send Data Word Allocation (2nd Operand of PMCR)

First word of send data	+0	Number of send data words	
	+1	(Undefined)	Unit No.

Offset	Contents (data format)	Data
+0	Number of send data words (4 digits BCD)	0002 (fixed)
+1	Unit No. (2 digits BCD)	00 to 31

Receive Data Word Allocation (3rd Operand of PMCR)

Receive data storage words	+0	Number of receive data words
	+1	Hysteresis (heating)
	+2	Hysteresis (cooling)

Offset	Contents (data format)	Data
+0	Number of receive data words (4 digits BCD)	0003
+1	Hysteresis (heating) (4 digits BCD)	0001 to 9999
+2	Hysteresis (cooling) (4 digits BCD)	0001 to 9999

Read Control Period (Sequence No. 010)

Reads the control period for heating and for cooling and stores the results in the specified words.

Send Data Word Allocation (2nd Operand of PMCR)

First word of send data	+0	Number of send data words	
	+1	(Undefined)	Unit No.

Offset	Contents (data format)	Data
+0	Number of send data words (4 digits BCD)	0002 (fixed)
+1	Unit No. (2 digits BCD)	00 to 31

Receive Data Word Allocation (3rd Operand of PMCR)

Receive data storage words	+0	Number of receive data words
	+1	Control period (heating)
	+2	Control period (cooling)

Offset	Contents (data format)	Data
+0	Number of receive data words (4 digits BCD)	0003
+1	Control period (heating) (4 digits BCD)	0001 to 0099
+2	Control period (cooling) (4 digits BCD)	0001 to 0099

Read SP Ramp Time Unit and Set Value (Sequence No. 011)

Reads the SP ramp time unit and SP ramp set value and stores the results in the specified words.

Send Data Word Allocation (2nd Operand of PMCR)

First word of send data	+0	Number of send data words	
	+1	(Undefined)	Unit No.

Offset	Contents (data format)	Data
+0	Number of send data words (4 digits BCD)	0002 (fixed)
+1	Unit No. (2 digits BCD)	00 to 31

Receive Data Word Allocation (3rd Operand of PMCR)

Receive data storage words	+0	Number of receive data words
	+1	SP ramp time unit
	+2	SP ramp set value

Offset	Contents (data format)	Data
+0	Number of receive data words (4 digits BCD)	0003
+1	SP ramp time unit (4 digits BCD)	0000: s, 0001: hr
+2	SP ramp set value (4 digits BCD)	0000 to 9999

Read LBA Detection Time (Sequence No. 012)

Reads the LBA (loop break alarm) detection time and stores the results in the specified words.

Send Data Word Allocation (2nd Operand of PMCR)

First word of send data	+0	Number of send data words	
	+1	(Undefined)	Unit No.

Offset	Contents (data format)	Data
+0	Number of send data words (4 digits BCD)	0002 (fixed)
+1	Unit No. (2 digits BCD)	00 to 31

Receive Data Word Allocation (3rd Operand of PMCR)

Receive data storage words	+0	Number of receive data words
	+1	LBA detection time

Offset	Contents (data format)	Data
+0	Number of receive data words (4 digits BCD)	0002
+1	LBA detection time (4 digits BCD)	0000 to 9999

Read MV at Stop Time and at PV Error (Sequence No.013)

Reads the MV at stop time and at PV error and stores the results in the specified words.

Send Data Word Allocation (2nd Operand of PMCR)

First word of send data	+0	Number of send data words	
	+1	(Undefined)	Unit No.

Offset	Contents (data format)	Data
+0	Number of send data words (4 digits BCD)	0002 (fixed)
+1	Unit No. (2 digits BCD)	00 to 31

Receive Data Word Allocation (3rd Operand of PMCR)

Receive data storage words	+0	Number of receive data words
	+1	MV at stop time
	+2	MV at PV error

Offset	Contents (data format)	Data
+0	Number of receive data words (4 digits BCD)	0003
+1	MV at stop time (4 digits BCD)	F050 to 1050 F indicates a negative value. A050 to 1050 for heating/cooling control A indicates a negative value.
+2	MV at PV error (4 digits BCD)	F050 to 1050 F indicates a negative value.

Read MV Limits (Sequence No. 014)

Reads the MV upper limit, MV lower limit, and MV change rate limit and stores the results in the specified words.

Send Data Word Allocation (2nd Operand of PMCR)

First word of send data	+0	Number of send data words	
	+1	(Undefined)	Unit No.

Offset	Contents (data format)	Data
+0	Number of send data words (4 digits BCD)	0002 (fixed)
+1	Unit No. (2 digits BCD)	00 to 31

Receive Data Word Allocation (3rd Operand of PMCR)

Receive data storage words	+0	Number of receive data words
	+1	MV upper limit
	+2	MV lower limit
	+3	MV change rate limit

Offset	Contents (data format)	Data
+0	Number of receive data words (4 digits BCD)	0004
+1	MV upper limit (4 digits BCD)	MV lower limit + 1 to 1050 0000 to 1050 for heating/cooling control
+2	MV lower limit (4 digits BCD)	F050 to MV upper limit –1 F indicates a negative value values. A050 to 1050 for heating/cooling control A indicates a negative value.
+3	MV change rate limit (4 digits BCD)	0000 to 1000

Read Input Digital Filter (Sequence No. 015)

Reads the input digital filter and stores the results in the specified words.

Send Data Word Allocation (2nd Operand of PMCR)

First word of send data	+0	Number of send data words	
	+1	(Undefined)	Unit No.

Offset	Contents (data format)	Data
+0	Number of send data words (4 digits BCD)	0002 (fixed)
+1	Unit No. (2 digits BCD)	00 to 31

Receive Data Word Allocation (3rd Operand of PMCR)

Receive data storage words	+0	Number of receive data words
	+1	Input digital filter

Offset	Contents (data format)	Data
+0	Number of receive data words (4 digits BCD)	0002
+1	Input digital filter (4 digits BCD)	0000 to 9999

Read Alarm Hysteresis (Sequence No. 016)

Reads the alarm 1 hysteresis and alarm 2 hysteresis and stores the results in the specified words.

Send Data Word Allocation (2nd Operand of PMCR)

First word of send data	+0	Number of send data words	
	+1	(Undefined)	Unit No.

Offset	Contents (data format)	Data
+0	Number of send data words (4 digits BCD)	0002 (fixed)
+1	Unit No. (2 digits BCD)	00 to 31

Receive Data Word Allocation (3rd Operand of PMCR)

Receive data storage words	+0	Number of receive data words
	+1	Alarm 1 hysteresis
	+2	Alarm 2 hysteresis

Offset	Contents (data format)	Data
+0	Number of receive data words (4 digits BCD)	0003
+1	Alarm 1 hysteresis (4 digits BCD)	0001 to 9999
+2	Alarm 2 hysteresis (4 digits BCD)	0001 to 9999

Read Input Shift Limits (Sequence No. 017)

Reads the input shift upper limit and input shift lower limit and stores the results in the specified words.

Send Data Word Allocation (2nd Operand of PMCR)

First word of send data	+0	Number of send data words	
	+1	(Undefined)	Unit No.

Offset	Contents (data format)	Data
+0	Number of send data words (4 digits BCD)	0002 (fixed)
+1	Unit No. (2 digits BCD)	00 to 31

Receive Data Word Allocation (3rd Operand of PMCR)

Receive data storage words		
+0	Number of receive data words	
+1	Input shift upper limit	
+2	Input shift lower limit	

Offset	Contents (data format)	Data
+0	Number of receive data words (4 digits BCD)	0003
+1	Input shift upper limit (4 digits BCD)	A999 to 9999 F indicates a negative value and A indicates –1.
+2	Input shift lower limit (4 digits BCD)	A999 to 9999 F indicates a negative value and A indicates –1.

Read Level 0 Parameters (Sequence No. 018)

Reads parameters in level 0 (process value, set point during SP ramp, MV (heating), MV (cooling), and set point) from multiple units and stores the results in the specified words.

Send Data Word Allocation (2nd Operand of PMCR)

First word of send data			
+0	Number of send data words		
+1	Number of units		
+2	(Undefined)	Unit No.	
+3	(Undefined)	Unit No.	
~			
+9	(Undefined)	Unit No.	(max.)

Offset	Contents (data format)	Data
+0	Number of send data words (4 digits BCD)	Number of units + 2
+1	Number of units (4 digits BCD)	0001 to 0008
+2 to 9	Unit No. (2 digits BCD)	00 to 31

Receive Data Word Allocation (3rd Operand of PMCR)

Receive data storage words		
+0	Number of receive data words	
+1	Process value	1st unit
+2	Set point during SP ramp	1st unit
+3	MV (heating)	1st unit
+4	MV (cooling)	1st unit
+5	Set point	1st unit
~		
+36	Process value	8th unit (max.)
+37	Set point during SP ramp	8th unit (max.)
+38	MV (heating)	8th unit (max.)
+39	MV (cooling)	8th unit (max.)
+40	Set point	8th unit (max.)

Offset	Contents (data format)	Data
+0	Number of receive data words (4 digits BCD)	Number of units × 5 + 1
+1	1st unit Process value (4 digits BCD)	Scaling lower limit to upper limit
+2	1st unit Set point during SP ramp (4 digits BCD)	Set point lower limit to upper limit
+3	1st unit MV (heating) (4 digits BCD)	F050 to 1050 F indicates a negative value. 0000 to 1050 for heating/cooling control
+4	1st unit MV (cooling) (4 digits BCD)	0000 to 1050
+5	1st unit Set point (4 digits BCD)	Set point lower limit to upper limit
	• • •	
+40 (max.)	8th unit Set point (4 digits BCD)	Set point lower limit to upper limit

Read Level 1 Parameters 1 (Sequence No. 019)

Reads parameters in level 1 (alarm value 1, alarm value 2 , alarm value 3, proportional band, integral time, and derivative time) from multiple units and stores the results in the specified words.

Send Data Word Allocation (2nd Operand of PMCR)

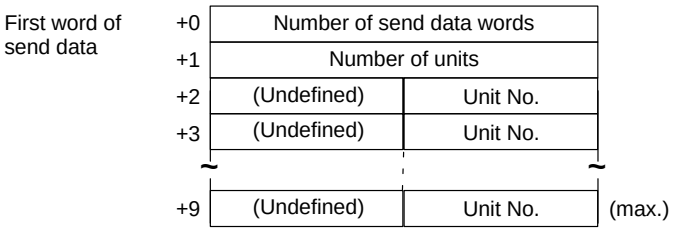

Offset	Contents (data format)	Data
+0	Number of send data words (4 digits BCD)	Number of units + 2
+1	Number of units (4 digits BCD)	0001 to 0008
+2 to 9	Unit No. (2 digits BCD)	00 to 31

Receive Data Word Allocation (3rd Operand of PMCR)

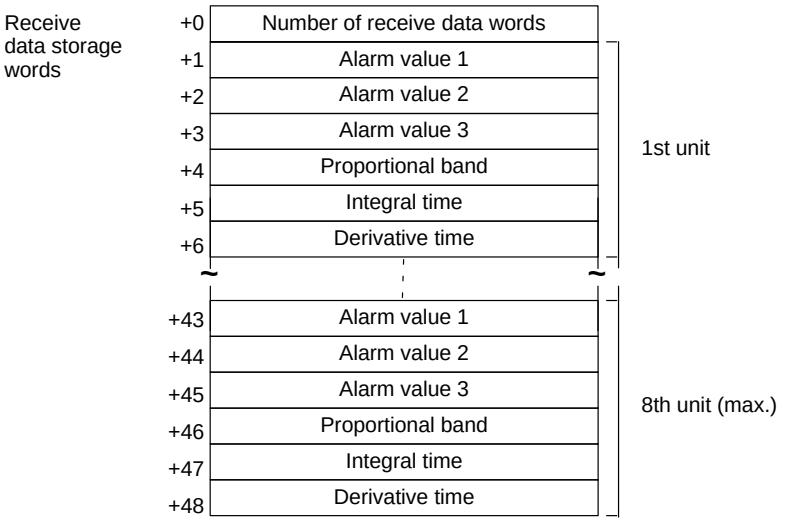

Offset	Contents (data format)	Data
+0	Number of receive data words (4 digits BCD)	Number of units × 6 + 1
+1	1st unit Alarm value 1 (4 digits BCD)	A999 to 9999 F indicates a negative value and A indicates –1.
+2	1st unit Alarm value 2 (4 digits BCD)	A999 to 9999 F indicates a negative value and A indicates –1.
+3	1st unit Alarm value 3 (4 digits BCD)	A999 to 9999 F indicates a negative value and A indicates –1.
+4	1st unit Proportional band (4 digits BCD)	0001 to 9999
+5	1st unit Integral time (4 digits BCD)	0000 to 3999
+6	1st unit Derivative time (4 digits BCD)	0000 to 3999
	• • •	
+48 (max.)	8th unit Derivative time (4 digits BCD)	0000 to 3999

Read Level 1 Parameters 2 (Sequence No. 020)

Reads parameters in level 1 (cooling coefficient, dead band, manual reset value, hysteresis (heating), hysteresis (cooling), control period (heating), and control period (cooling)) from multiple units and stores the results in the specified words.

Send Data Word Allocation (2nd Operand of PMCR)

First word of send data				
	+0	Number of send data words		
	+1	Number of units		
	+2	(Undefined)	Unit No.	
	+3	(Undefined)	Unit No.	
	~		~	
	+9	(Undefined)	Unit No.	(max.)

Offset	Contents (data format)	Data
+0	Number of send data words (4 digits BCD)	Number of units + 2
+1	Number of units (4 digits BCD)	0001 to 0008
+2 to 9	Unit No. (2 digits BCD)	00 to 31

Receive Data Word Allocation (3rd Operand of PMCR)

Receive data storage words			
	+0	Number of receive data words	
	+1	Cooling coefficient	1st unit
	+2	Dead band	
	+3	Manual reset value	
	+4	Hysteresis (heating)	
	+5	Hysteresis (cooling)	
	+6	Control period (heating)	
	+7	Control period (cooling)	
	~	~	
	+50	Cooling coefficient	8th unit (max.)
	+51	Dead band	
	+52	Manual reset value	
	+53	Hysteresis (heating)	
	+54	Hysteresis (cooling)	
	+55	Control period (heating)	
	+56	Control period (cooling)	

Offset	Contents (data format)	Data
+0	Number of receive data words (4 digits BCD)	Number of units × 7 + 1
+1	1st unit Cooling coefficient (4 digits BCD)	0001 to 9999
+2	1st unit Dead band (4 digits BCD)	A999 to 9999 F indicates a negative value and A indicates –1.
+3	1st unit Manual reset value (4 digits BCD)	0000 to 1000
+4	1st unit Hysteresis (heating) (4 digits BCD)	0001 to 9999
+5	1st unit Hysteresis (cooling) (4 digits BCD)	0001 to 9999
+6	1st unit Control period (heating) (4 digits BCD)	0001 to 0099
+7	1st unit Control period (cooling) (4 digits BCD)	0001 to 0099
	• • •	
+56 (max.)	8th unit Control period (cooling) (4 digits BCD)	0001 to 0099

Read Level 2 Parameters 1 (Sequence No. 021)

Reads parameters in level 2 (SP ramp time unit, SP ramp set value, LBA detection time, MV at stop, MV at PV Error, MV upper limit, MV lower limit, and MV change rate limit) from multiple units and stores the results in the specified words.

Send Data Word Allocation (2nd Operand of PMCR)

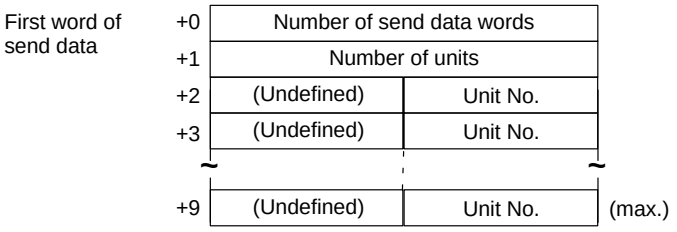

Offset	Contents (data format)	Data
+0	Number of send data words (4 digits BCD)	Number of units + 2
+1	Number of units (4 digits BCD)	0001 to 0008
+2 to 9	Unit No. (2 digits BCD)	00 to 31

Receive Data Word Allocation (3rd Operand of PMCR)

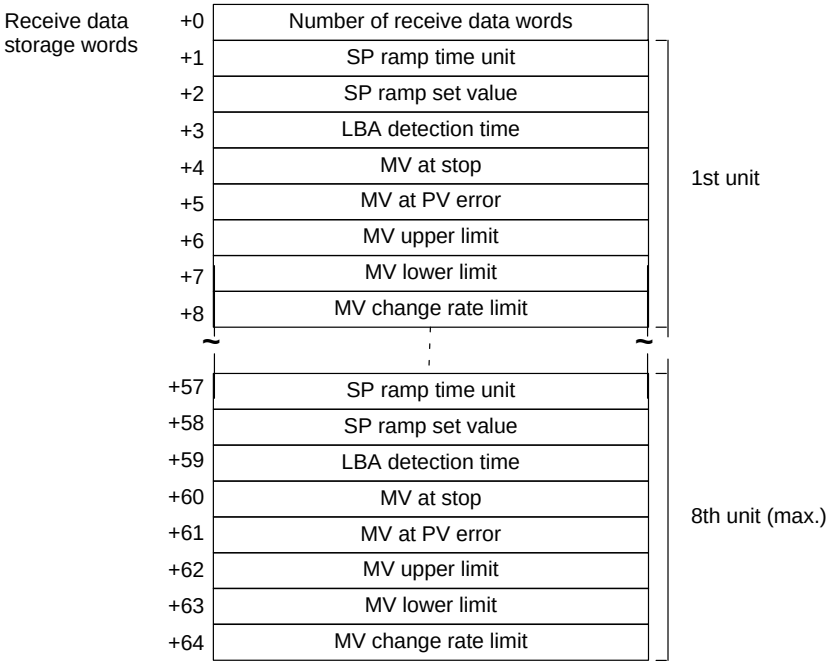

Offset	Contents (data format)	Data
+0	Number of receive data words (4 digits BCD)	Number of units × 8 + 1
+1	1st unit SP ramp time unit (4 digits BCD)	0000: s, 0001: hr
+2	1st unit SP ramp set value (4 digits BCD)	0000 to 9999
+3	1st unit LBA detection time (4 digits BCD)}	0000 to 9999
+4	1st unit MV at stop (4 digits BCD)	F050 to 1050 F indicates a negative value. A050 to 1050 for heating/cooling control A indicates a negative value.
+5	1st unit MV at PV error (4 digits BCD)	F050 to 1050 F indicates a negative value. A050 to 1050 for heating/cooling control A indicates a negative value.
+6	1st unit MV upper limit (4 digits BCD)	MV lower limit + 1 to 1050 0000 to 1050 for heating/cooling control
+7	1st unit MV lower limit (4 digits BCD)	F050 to MV upper limit –1 F indicates a negative value. A050 to 1050 for heating/cooling control A indicates a negative value.
+8	1st unit MV change rate limit (4 digits BCD)	0000 to 1000
	• • •	
+64 (max.)	8th unit MV change rate limit (4 digits BCD)	0000 to 1000

Read Level 2 Parameters 2 (Sequence No. 022)

Reads parameters in level 2 (input digital filter, alarm 1 hysteresis, alarm 2 hysteresis, alarm 3 hysteresis, input shift upper limit, and input shift lower limit) from multiple units and stores the results in the specified words.

Send Data Word Allocation (2nd Operand of PMCR)

First word of send data			
	+0	Number of send data words	
	+1	Number of units	
	+2	(Undefined)	Unit No.
	+3	(Undefined)	Unit No.
	~	~	~
	+9	(Undefined)	Unit No. (max.)

Offset	Contents (data format)	Data
+0	Number of send data words (4 digits BCD)	Number of units + 2
+1	Number of units (4 digits BCD)	0001 to 0008
+2 to 9	Unit No. (2 digits BCD)	00 to 31

Receive Data Word Allocation (3rd Operand of PMCR)

Receive data storage words			
	+0	Number of receive data words	
	+1	Input digital filter	1st unit
	+2	Alarm 1 hysteresis	
	+3	Alarm 2 hysteresis	
	+4	Alarm 3 hysteresis	
	+5	Input shift upper limit	
	+6	Input shift lower limit	
	~	~	
	+43	Input digital filter	8th unit (max.)
	+44	Alarm 1 hysteresis	
	+45	Alarm 2 hysteresis	
	+46	Alarm 3 hysteresis	
	+47	Input shift upper limit	
	+48	Input shift lower limit	

Offset	Contents (data format)	Data
+0	Number of receive data words (4 digits BCD)	Number of units × 6 + 1
+1	1st unit Input digital filter (4 digits BCD)	0000 to 9999
+2	1st unit Alarm 1 hysteresis (4 digits BCD)	0001 to 9999
+3	1st unit Alarm 2 hysteresis (4 digits BCD)	0001 to 9999
+4	1st unit Alarm 3 hysteresis (4 digits BCD)	0001 to 9999
+5	1st unit Input shift upper limit (4 digits BCD)	A999 to 9999 F indicates a negative value and A indicates –1.
+6	1st unit Input shift lower limit (4 digits BCD)	A999 to 9999 F indicates a negative value and A indicates –1.
	• • •	
+48 (max.)	8th unit Input shift lower limit (4 digits BCD)	A999 to 9999 F indicates a negative value and A indicates –1.

General-purpose Read (Sequence No. 023)

Reads the specified parameter and stores the results in the specified words.

Send Data Word Allocation (2nd Operand of PMCR)

First word of send data	+0	Number of send data words	
	+1	(Undefined)	Unit No.
	+2	(Undefined)	Parameter No.

Offset	Contents (data format)	Data
+0	Number of send data words (4 digits BCD)	0003 (fixed)
+1	Unit No. (2 digits BCD)	00 to 31
+2	Parameter No. (2 digits BCD)	Refer to the manual for the E5□K.

Receive Data Word Allocation (3rd Operand of PMCR)

Receive data storage words	+0	Number of receive data words
	+1	Read data

Offset	Contents (data format)	Data
+0	Number of receive data words (4 digits BCD)	0002
+1	Read data (4 digits BCD)	A999 to 9999 F indicates a negative value and A indicates –1.

Note To read parameters in the setup mode or extended mode, execute Switch to Level 1 (Sequence No. 075) in advance.

Appendix B
E5□K Digital Controller Write Protocol

The E5□K Digital Controller Write Protocol writes and controls various settings in remote mode for the Controller connected to the Communications Board via RS-232C or RS-485 cable.

Note Negative values cannot be written. All values must be set as unsigned BCD.

Structure of the Protocol

The following table shows the structure of the E5□K Digital Controller Write Protocol.

Sequence No.	Communications sequence name	Function	Ladder interface	
			Send word allocation	Receive word allocation
050	Write set point	Writes the set point.	Yes	No
051	Write alarm value	Writes alarm value 1, 2.	Yes	No
052	Write proportional band, integral time, and derivative time	Writes the proportional band, integral time, and derivative time.	Yes	No
053	Write cooling coefficient	Writes the cooling coefficient.	Yes	No
054	Write dead band	Writes the dead band.	Yes	No
055	Write manual reset value	Writes the manual reset value.	Yes	No
056	Write hysteresis	Writes the hysteresis (heating, cooling)	Yes	No
057	Write control period	Writes the control period (heating, cooling)	Yes	No
058	Write SP ramp time units and set value	Writes the SP ramp time unit and SP ramp set value.	Yes	No
059	Write LBA detection time	Writes the LBA detection time.	Yes	No
060	Write MV at stop time and PV error	Writes the MV at stop and the MV at PC error.	Yes	No
061	Write MV limits	Writes the MV limits.	Yes	No
062	Write input digital filter	Writes the input digital filter.	Yes	No
063	Write alarm hysteresis	Writes alarm 1, 2 hysteresis.	Yes	No
064	Write input shift values	Writes the input shift values.	Yes	No
065	Write level 0 parameters	Writes parameters in level 0.	Yes	No
066	Write level 1 parameters 1	Writes parameters in level 1.	Yes	No
067	Write level 1 parameters 2	Writes parameters in level 1.	Yes	No
068	Write level 2 parameters 1	Writes parameters in level 2.	Yes	No
069	Write level 2 parameters 2	Writes parameters in level 2.	Yes	No
070	General-purpose write	Writes the value of the specified parameter.	Yes	No
071	Switch to level 0 (software reset)	Switches the setting level to level 0.	Yes	No
072	Run/stop	Initiates Run or Stop.	Yes	No
073	Remote/local	Switches the mode to remote or local mode.	Yes	No
074	Execute/cancel AT	Executes or cancels AT.	Yes	No
075	Switch to level 1	Switches the setting level to level 1.	Yes	No
076	Software reset	Resets the E5□K.	Yes	No

Note Ladder Interface Settings

YES: User settings are required for the 2nd or 3rd operands of PMCR.

NO: Send word allocation: Set the constant 0000 for the 2nd operand (S).
Receive word allocation: Set a dummy word (e.g., DM0000) address for the 3rd operand (D).

Connections

The connections are the same as that for the E5□K Digital Controller Read Protocol.

Write Set Point (Sequence No. 050)

Writes the set point.

Send Data Word Allocation (2nd Operand of PMCR)

First word of send data	+0	Number of send data words	
	+1	(Undefined)	Unit No.
	+2	set point	

Offset	Contents (data format)	Data
+0	Number of send data words (4 digits BCD)	0003 (fixed)
+1	Unit No. (2 digits BCD)	00 to 31
+2	Set point (4 digits BCD)	Set point lower limit to upper limit

Receive Data Word Allocation (3rd Operand of PMCR)

None.

Write Alarm Value (Sequence No. 051)

Writes alarm value 1 and alarm value 2.

Send Data Word Allocation (2nd Operand of PMCR)

First word of send data	+0	Number of send data words	
	+1	(Undefined)	Unit No.
	+2	Alarm value 1	
	+3	Alarm value 2	

Offset	Contents (data format)	Data
+0	Number of send data words (4 digits BCD)	0004 (fixed)
+1	Unit No. (2 digits BCD)	00 to 31
+2	Alarm value 1 (4 digits BCD)	0000 to 999
+3	Alarm value 2 (4 digits BCD)	0000 to 9999

Receive Data Word Allocation (3rd Operand of PMCR)

None.

Write Proportional Band, Integral Time, and Derivative Time (Sequence No. 052)

Writes the proportional band, integral time, and derivative time.

Send Data Word Allocation (2nd Operand of PMCR)

First word of send data	+0	Number of send data words	
	+1	(Undefined)	Unit No.
	+2	Proportional band	
	+3	Integral time	
	+4	Derivative time	

Offset	Contents (data format)	Data
+0	Number of send data words (4 digits BCD)	0005 (fixed)
+1	Unit No. (2 digits BCD)	00 to 31
+2	Proportional band (4 digits BCD)	0001 to 9999
+3	Integral time (4 digits BCD)	0000 to 3999
+4	Derivative time (4 digits BCD)	0000 to 3999

Receive Data Word Allocation (3rd Operand of PMCR)
None.

Write Cooling Coefficient (Sequence No. 053)

Writes the cooling coefficient.

Send Data Word Allocation (2nd Operand of PMCR)

First word of send data	+0	Number of send data words	
	+1	(Undefined)	Unit No.
	+2	Cooling coefficient	

Offset	Contents (data format)	Data
+0	Number of send data words (4 digits BCD)	0003 (fixed)
+1	Unit No. (2 digits BCD)	00 to 31
+2	Cooling coefficient (4 digits BCD)	0001 to 9999

Receive Data Word Allocation (3rd Operand of PMCR)
None.

Write Dead Band (Sequence No. 054)

Writes the dead band.

Send Data Word Allocation (2nd Operand of PMCR)

First word of send data	+0	Number of send data words	
	+1	(Undefined)	Unit No.
	+2	Dead band	

Offset	Contents (data format)	Data
+0	Number of send data words (4 digits BCD)	0003 (fixed)
+1	Unit No. (2 digits BCD)	00 to 31
+2	Dead band (4 digits BCD)	0000 to 9999

Receive Data Word Allocation (3rd Operand of PMCR)
None.

Write Manual Reset Value (Sequence No. 055)

Writes the manual reset value.

Send Data Word Allocation (2nd Operand of PMCR)

First word of send data	+0	Number of send data words	
	+1	(Undefined)	Unit No.
	+2	Manual reset value	

Offset	Contents (data format)	Data
+0	Number of send data words (4 digits BCD)	0003 (fixed)
+1	Unit No. (2 digits BCD)	00 to 31
+2	Manual reset value (4 digits BCD)	0000 to 1000

Receive Data Word Allocation (3rd Operand of PMCR)
None.

Write Hysteresis (Sequence No. 056)

Writes the hysteresis for heating and for cooling.

Send Data Word Allocation (2nd Operand of PMCR)

First word of send data	+0	Number of send data words	
	+1	(Undefined)	Unit No.
	+2	Hysteresis (heating)	
	+3	Hysteresis (cooling)	

Offset	Contents (data format)	Data
+0	Number of send data words (4 digits BCD)	0004 (fixed)
+1	Unit No. (2 digits BCD)	00 to 31
+2	Hysteresis (heating) (4 digits BCD)	0001 to 9999
+3	Hysteresis (cooling) (4 digits BCD)	0001 to 9999

Receive Data Word Allocation (3rd Operand of PMCR)

None.

Write Control Period (Sequence No. 057)

Writes the control period for heating and for cooling.

Send Data Word Allocation (2nd Operand of PMCR)

First word of send data	+0	Number of send data words	
	+1	(Undefined)	Unit No.
	+2	Control period (heating)	
	+3	Control period (cooling)	

Offset	Contents (data format)	Data
+0	Number of send data words (4 digits BCD)	0004 (fixed)
+1	Unit No. (2 digits BCD)	00 to 31
+2	Control period (heating) (4 digits BCD)	0001 to 0099
+3	Control period (cooling) (4 digits BCD)	0001 to 0099

Receive Data Word Allocation (3rd Operand of PMCR)

None.

Write SP Ramp Time Unit and Set Value (Sequence No. 058)

Writes the SP ramp time unit and SP ramp set value.

Send Data Word Allocation (2nd Operand of PMCR)

First word of send data	+0	Number of send data words	
	+1	(Undefined)	Unit No.
	+2	SP ramp time unit	
	+3	SP ramp set value	

Offset	Contents (data format)	Data
+0	Number of send data words (4 digits BCD)	0004 (fixed)
+1	Unit No. (2 digits BCD)	00 to 31
+2	SP ramp time unit (4 digits BCD)	0000: Minutes 0001: Hours
+3	SP ramp set value (4 digits BCD)	0000 to 9999

Receive Data Word Allocation (3rd Operand of PMCR)
None.

Write LBA Detection Time (Sequence No. 059)

Writes the LBA detection time.

Send Data Word Allocation (2nd Operand of PMCR)

First word of send data	+0	Number of send data words	
	+1	(Undefined)	Unit No.
	+2	LBA detection time	

Offset	Contents (data format)	Data
+0	Number of send data words (4 digits BCD)	0003 (fixed)
+1	Unit No. (2 digits BCD)	00 to 31
+2	LBA detection time (4 digits BCD)	0000 to 9999

Receive Data Word Allocation (3rd Operand of PMCR)
None.

Write MV at Stop Time and at PV Error (Sequence No. 060)

Writes the MV at stop time and the MV at PV error.

Send Data Word Allocation (2nd Operand of PMCR)

First word of send data	+0	Number of send data words	
	+1	(Undefined)	Unit No.
	+2	MV at stop time	
	+3	MV at PV error	

Offset	Contents (data format)	Data
+0	Number of send data words (4 digits BCD)	0004 (fixed)
+1	Unit No. (2 digits BCD)	00 to 31
+2	MV at stop time (4 digits BCD)	0000 to 1050
+3	MV at PV error (4 digits BCD)	0000 to 1050

Receive Data Word Allocation (3rd Operand of PMCR)
None.

Write MV Limits (Sequence No. 061)

Writes the MV upper limit, MV lower limit, and MV change rate limit.

Send Data Word Allocation (2nd Operand of PMCR)

First word of send data	+0	Number of send data words	
	+1	(Undefined)	Unit No.
	+2	MV upper limit	
	+3	MV lower limit	
	+4	MV change rate limit	

Offset	Contents (data format)	Data
+0	Number of send data words (4 digits BCD)	0005 (fixed)
+1	Unit No. (2 digits BCD)	00 to 31
+2	MV upper limit (4 digits BCD)	MV lower limit +1 to 1050 Heating/cooling control time: 0000 to 1050
+3	MV lower limit (4 digits BCD)	0000 to MV upper limit –1
+4	MV change rate limit (4 digits BCD)	0000 to 1000

Receive Data Word Allocation (3rd Operand of PMCR)
None.

Write Input Digital Filter (Sequence No. 062)

Writes the input digital filter.

Send Data Word Allocation (2nd Operand of PMCR)

First word of send data	+0	Number of send data words	
	+1	(Undefined)	Unit No.
	+2	Input digital filter	

Offset	Contents (data format)	Data
+0	Number of send data words (4 digits BCD)	0003 (fixed)
+1	Unit No. (2 digits BCD)	00 to 31
+2	Input digital filter (4 digits BCD)	0000 to 9999

Receive Data Word Allocation (3rd Operand of PMCR)
None.

Write Alarm Hysteresis (Sequence No. 063)

Writes the alarm 1 hysteresis and alarm 2 hysteresis.

Send Data Word Allocation (2nd Operand of PMCR)

First word of send data	+0	Number of send data words	
	+1	(Undefined)	Unit No.
	+2	Alarm 1 hysteresis	
	+3	Alarm 2 hysteresis	

Offset	Contents (data format)	Data
+0	Number of send data words (4 digits BCD)	0004 (fixed)
+1	Unit No. (2 digits BCD)	00 to 31
+2	Alarm 1 hysteresis (4 digits BCD)	0001 to 9999
+3	Alarm 2 hysteresis (4 digits BCD)	0001 to 9999

Receive Data Word Allocation (3rd Operand of PMCR)
None.

Write Input Shift Value (Sequence No. 064)

Writes the input shift upper limit and input shift lower limit.

Send Data Word Allocation (2nd Operand of PMCR)

First word of send data	+0	Number of send data words	
	+1	(Undefined)	Unit No.
	+2	Input shift upper limit	
	+3	Input shift lower limit	

Offset	Contents (data format)	Data
+0	Number of send data words (4 digits BCD)	0004 (fixed)
+1	Unit No. (2 digits BCD)	00 to 31
+2	Input shift upper limit (4 digits BCD)	0000 to 9999
+3	Input shift lower limit (4 digits BCD)	0000 to 9999

Receive Data Word Allocation (3rd Operand of PMCR)

None.

Write Level 0 Parameters (Sequence No. 065)

Writes parameters (set points) in level 0 to multiple units.

Send Data Word Allocation (2nd Operand of PMCR)

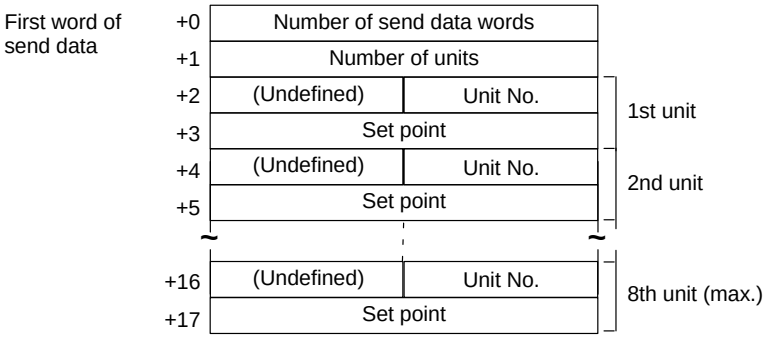

Offset	Contents (data format)	Data
+0	Number of send data words (4 digits BCD)	Number of units × 2 + 2
+1	Number of units (4 digits BCD)	0001 to 0008
+2	1st unit Unit No. (2 digits BCD)	00 to 31
+3	1st unit Set point (4 digits BCD)	Set point lower limit to upper limit
	• • •	
+17 (max.)	8th unit Set point (4 digits BCD)	Set point lower limit to upper limit

Receive Data Word Allocation (3rd Operand of PMCR)

None.

Write Level 1 Parameters 1 (Sequence No. 066)

Writes parameters in level 1 (alarm value 1, alarm value 2, alarm value 3, proportional band, integral time, and derivative time) to multiple units.

Send Data Word Allocation (2nd Operand of PMCR)

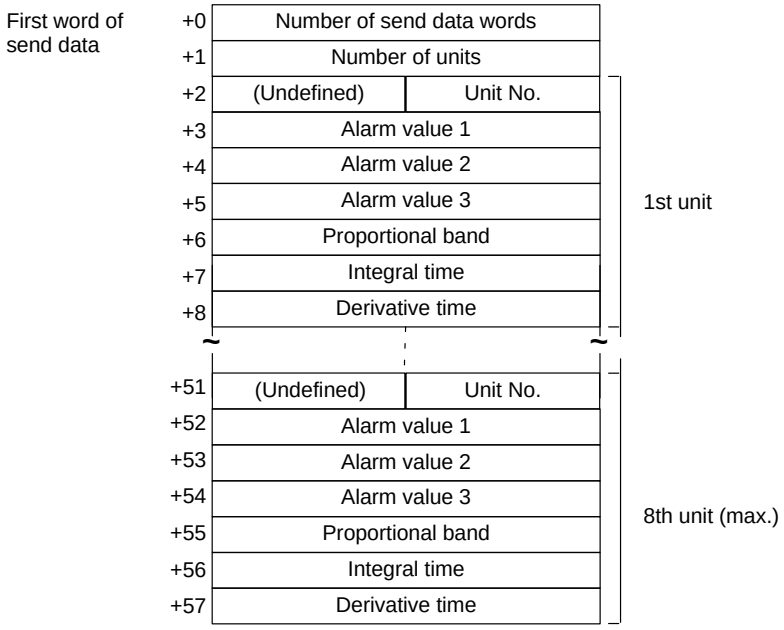

Offset	Contents (data format)	Data
+0	Number of send data words (4 digits BCD)	Number of units × 7 + 2
+1	Number of units (4 digits BCD)	0001 to 0008
+2	1st unit Unit No. (2 digits BCD)	00 to 31
+3	1st unit Alarm value 1 (4 digits BCD)	A999 to 9999 F indicates a negative value and A indicates –1.
+4	1st unit Alarm value 2 (4 digits BCD)	A999 to 9999 F indicates a negative value and A indicates –1.
+5	1st unit Alarm value 3 (4 digits BCD)	A999 to 9999 F indicates a negative value and A indicates –1.
+6	1st unit Proportional band (4 digits BCD)	0001 to 9999
+7	1st unit Integral time (4 digits BCD)	0000 to 3999
+8	1st unit Derivative time (4 digits BCD)	0000 to 3999
	• • •	
+57 (max.)	8th unit Derivative time (4 digits BCD)	0000 to 3999

Receive Data Word Allocation (3rd Operand of PMCR)

None.

Write Level 1 Parameter 2 (Sequence No. 067)

Writes parameters in level 1 (cooling coefficient, dead band, manual reset value, hysteresis (heating), hysteresis (cooling), control period (heating), and control period (cooling)) to multiple units.

Send Data Word Allocation (2nd Operand of PMCR)

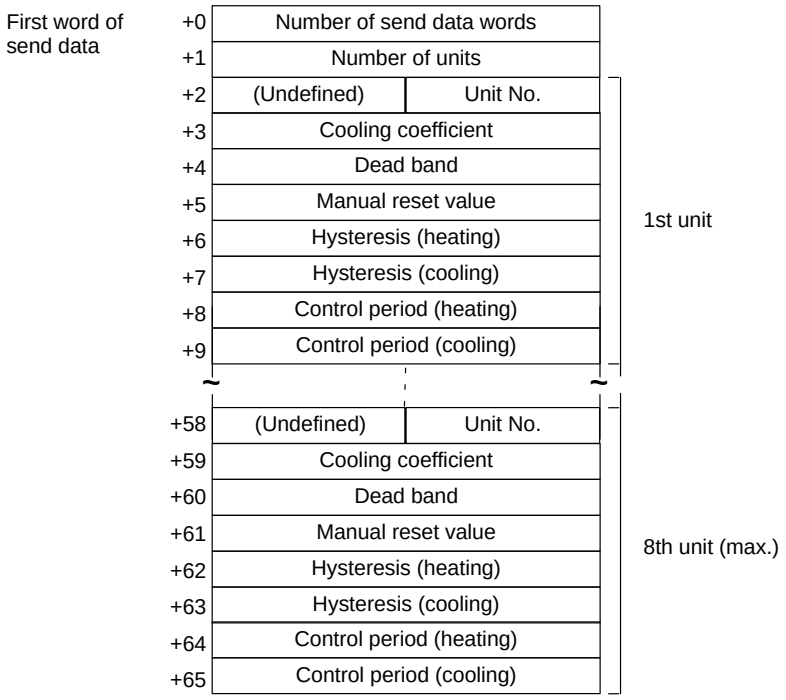

Offset	Contents (data format)	Data
+0	Number of send data words (4 digits BCD)	Number of units × 8 + 2
+1	Number of units (4 digits BCD)	0001 to 0008
+2	1st unit Unit No. (2 digits BCD)	00 to 31
+3	1st unit Cooling coefficient (4 digits BCD)	0001 to 9999
+4	1st unit Dead band (4 digits BCD)	0000 to 9999
+5	1st unit Manual reset value (4 digits BCD)	0000 to 1000
+6	1st unit Hysteresis (heating) (4 digits BCD)	0001 to 9999
+7	1st unit Hysteresis (cooling) (4 digits BCD)	0001 to 9999
+8	1st unit Control period (heating) (4 digits BCD)	0001 to 0099
+9	1st unit Control period (cooling) (4 digits BCD)	0001 to 0099
	• • •	
+65 (max.)	8th unit Control period (cooling) (4 digits BCD)	0001 to 0099

Receive Data Word Allocation (3rd Operand of PMCR)

None.

Write Level 2 Parameters 1 (Sequence No. 068)

Writes parameters in level 2 (SP ramp time unit, SP ramp set value, LBA detection time, MV at stop time, MV at PV error, MV upper limit, MV lower limit, and MV change rate limit) to multiple units.

Send Data Word Allocation (2nd Operand of PMCR)

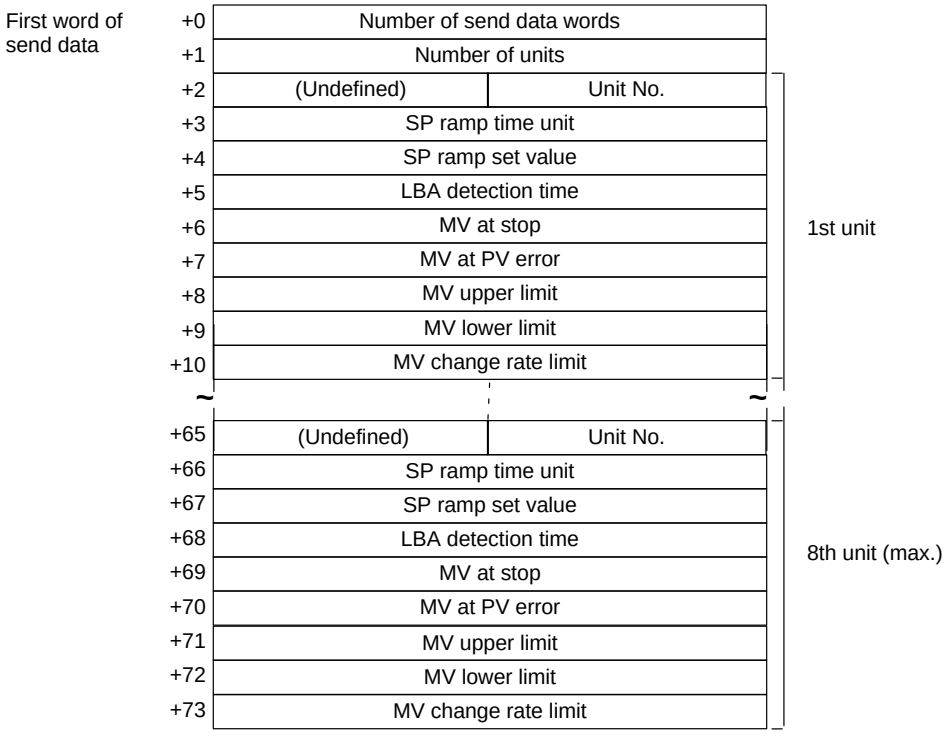

Offset	Contents (data format)	Data
+0	Number of send data words (4 digits BCD)	Number of units × 9 + 2
+1	Number of units (4 digits BCD)	0001 to 0008
+2	1st unit Unit No. (2 digits BCD)	00 to 31
+3	1st unit SP ramp time unit (4 digits BCD)	0000 to 0001
+4	1st unit SP ramp set value (4 digits BCD)	0000 to 9999
+5	1st unit LBA detection time (4 digits BCD)	0000 to 9999
+6	1st unit MV at stop (4 digits BCD)	0000 to 1050
+7	1st unit MV at PV error (4 digits BCD)	0000 to 1050
+8	1st unit MV upper limit (4 digits BCD)	MV lower limit +1 to 1050
+9	1st unit MV lower limit (4 digits BCD)	0000 to MV upper limit –1
+10	1st unit MV change rate limit (4 digits BCD)	0000 to 1000
	• • •	
+73 (max.)	8th unit MV change rate limit (4 digits BCD)	0000 to 1000

Receive Data Word Allocation (3rd Operand of PMCR)

None.

Write Level 2 Parameters 2 (Sequence No. 069)

Writes parameters in level 2 (input digital filter, alarm 1 hysteresis, alarm 2 hysteresis, alarm 3 hysteresis, input shift upper limit, and input shift lower limit) to multiple units.

Send Data Word Allocation (2nd Operand of PMCR)

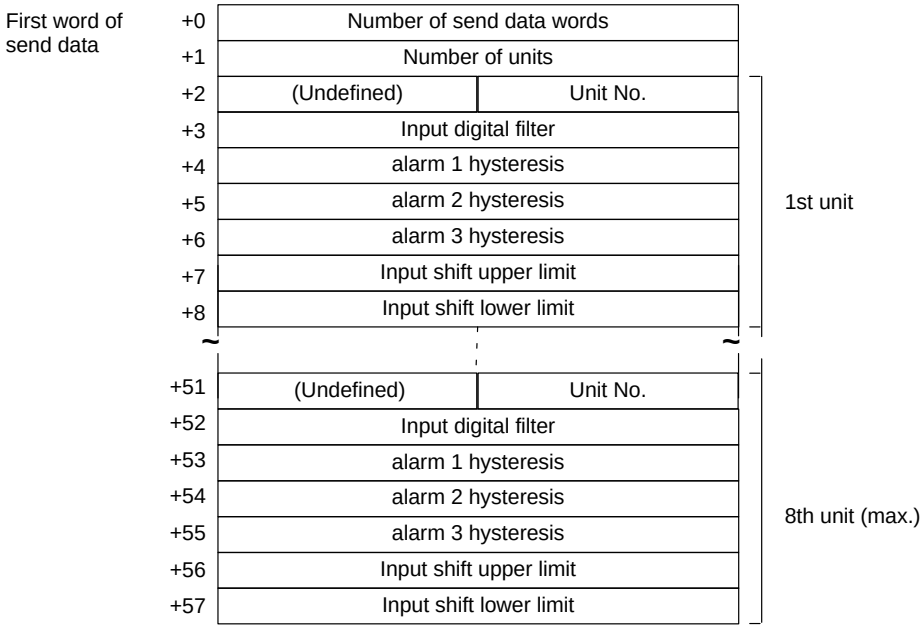

Offset	Contents (data format)	Data
+0	Number of send data words (4 digits BCD)	Number of units × 7 + 2
+1	Number of units (4 digits BCD)	0001 to 0008
+2	1st unit Unit No. (2 digits BCD)	00 to 31
+3	1st unit Input digital filter (4 digits BCD)	0000 to 9999
+4	1st unit Alarm 1 hysteresis (4 digits BCD)	0001 to 9999
+5	1st unit Alarm 2 hysteresis (4 digits BCD)	0001 to 9999
+6	1st unit Alarm 3 hysteresis (4 digits BCD)	0001 to 0099
+7	1st unit Input shift upper limit (4 digits BCD)	000 to 9999
+8	1st unit Input shift lower limit (4 digits BCD)	000 to 9999
	• • •	
+57 (max.)	8th unit Input shift lower limit (4 digits BCD)	000 to 9999

Receive Data Word Allocation (3rd Operand of PMCR)

None.

General-purpose Write (Sequence No. 070)

Writes the specified parameter.

Send Data Word Allocation (2nd Operand of PMCR)

First word of send data	+0	Number of send data words	
	+1	(Undefined)	Unit No.
	+2	(Undefined)	Parameter No.
	+3	Write data	

Offset	Contents (data format)	Data
+0	Number of send data words (4 digits BCD)	0004 (fixed)
+1	Unit No. (2 digits BCD)	00 to 31
+2	Parameter No. (2 digits BCD)	Refer to the manual of E5□K.
+3	Write data (4 digits BCD)	0000 to 9999

Receive Data Word Allocation (3rd Operand of PMCR)

None.

Note To write parameters in the setup mode or extended mode, execute Switch to Level 1 (Sequence No. 075) in advance.

Switch to Level 0 (Software Reset) (Sequence No. 071)

Resets the operation of the E5□K and waits until communications are enabled. This sequence can be executed for multiple units.

Send Data Word Allocation (2nd Operand of PMCR)

First word of send data	+0	Number of send data words		
	+1	Number of units		
	+2	(Undefined)	Unit No.	
	+3	(Undefined)	Unit No.	
	~	~	~	
	+9	(Undefined)	Unit No.	(max.)

Offset	Contents (data format)	Data
+0	Number of send data words (4 digits BCD)	Number of units + 2
+1	Number of units (4 digits BCD)	0001 to 0008
+2 to 9	Unit No. (2 digits BCD)	00 to 31

Receive Data Word Allocation (3rd Operand of PMCR)

None.

Note When this sequence is executed, a software reset command is issued and the operation of the E5□K is reset (equivalent to turning on the power supply). About five seconds will be required until communications are enabled.

Run/Stop (Sequence No. 072)

Switches the mode to Run or Stop according to the command code. This sequence can be executed for multiple units.

Send Data Word Allocation (2nd Operand of PMCR)

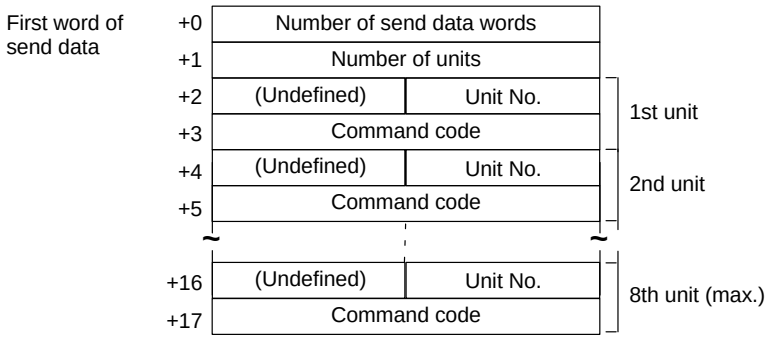

Offset	Contents (data format)	Data
+0	Number of send data words (4 digits BCD)	Number of units × 2 + 2
+1	Number of units (4 digits BCD)	0001 to 0008
+2	1st unit Unit No. (2 digits BCD)	00 to 31
+3	1st unit Command code (4 digits BCD)	0000: Run 0001: Stop
	• • •	
+17 (max.)	8th unit Command code (4 digits BCD)	0000: Run 0001: Stop

Receive Data Word Allocation (3rd Operand of PMCR)

None.

Remote/Local (Sequence No. 073)

Switches to remote operation or local operation according to the command mode. This sequence can be executed for multiple units.

Send Data Word Allocation (2nd Operand of PMCR)

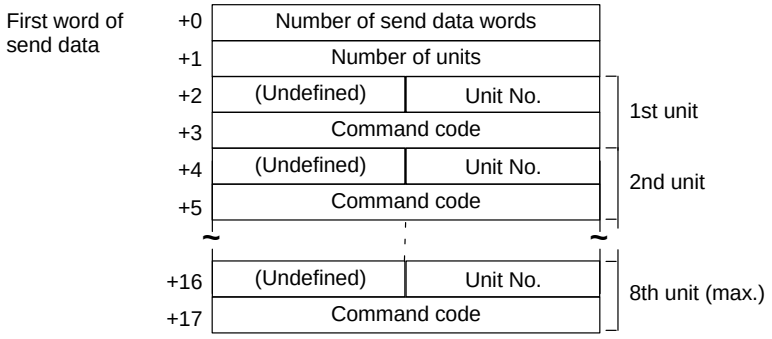

Offset	Contents (data format)	Data
+0	Number of send data words (4 digits BCD)	Number of units × 2 + 2
+1	Number of units (4 digits BCD)	0001 to 0008
+2	1st unit Unit No. (2 digits BCD)	00 to 31
+3	1st unit Command code (4 digits BCD)	0000: Local 0001: Remote
	• • •	
+17 (max.)	8th unit Command code (4 digits BCD)	0000: Local 0001: Remote

Receive Data Word Allocation (3rd Operand of PMCR)

None.

Execute/Cancel AT (Sequence No. 074)

Executes or cancels AT (autotuning) according to the command code. This sequence can be executed for multiple units.

Send Data Word Allocation (2nd Operand of PMCR)

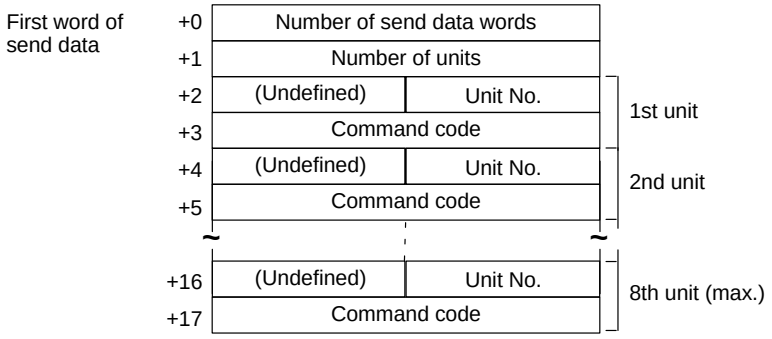

Offset	Contents (data format)	Data
+0	Number of send data words (4 digits BCD)	Number of units × 2 + 2
+1	Number of units (4 digits BCD)	0001 to 0008
+2	1st unit Unit No. (2 digits BCD)	00 to 31
+3	1st unit Command code (4 digits BCD)	0000: Stop 0001: Execute AT 40% 0002: Execute AT 100%
	• • •	
+17 (max.)	8th unit Command code (4 digits BCD)	0000: Stop 0001: Execute AT 40% 0002: Execute AT 100%

Receive Data Word Allocation (3rd Operand of PMCR)

None.

Switch to Level 1 (Sequence No. 075)

Switches the setting level to level 1 (setup mode, extended mode). This sequence can be executed for multiple units.

Send Data Word Allocation (2nd Operand of PMCR)

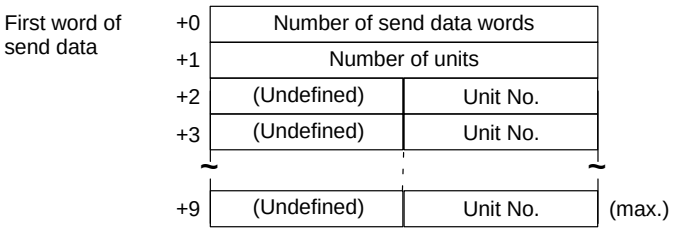

Offset	Contents (data format)	Data
+0	Number of send data words (4 digits BCD)	Number of units + 2
+1	Number of units (4 digits BCD)	0001 to 0008
+2 to 9	Unit No. (2 digits BCD)	00 to 31

Receive Data Word Allocation (3rd Operand of PMCR)

None.

Software Reset (Sequence No. 076)

Resets the operation of the E5□K (equivalent to turning on the power supply). This sequence can be executed for multiple units.

Send Data Word Allocation (2nd Operand of PMCR)

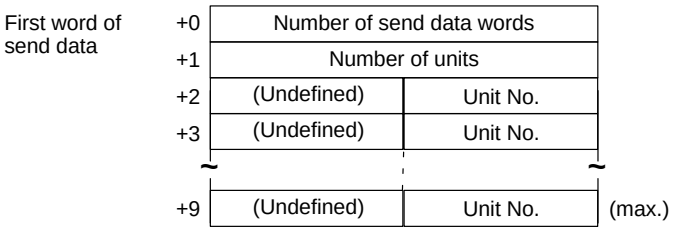

Offset	Contents (data format)	Data
+0	Number of send data words (4 digits BCD)	Number of units + 2
+1	Number of units (4 digits BCD)	0001 to 0008
+2 to 9	Unit No. (2 digits BCD)	00 to 31

Receive Data Word Allocation (3rd Operand of PMCR)

None.

Note Communications with the E5□K are disabled for about five seconds after this sequence is executed.

Appendix C
E5ZE Temperature Controller Read Protocol

The E5ZE Temperature Controller Read Protocol reads and controls various parameters in remote mode for the Temperature Controller connected to the Communications Board via RS-232C or RS-422A/485 cable.

Note All sequences in this appendix operate on memory bank 0 and cannot be used for other memory banks.

Structure of the Protocol

The following table shows the structure of the E5ZE Temperature Controller Read Protocol

Sequence No.	Communications sequence name	Function	Ladder interface	
			Send word allocation	Receive word allocation
100	Read set point	Reads the set points.	Yes	Yes
101	Read process value	Reads the process values.	Yes	Yes
102	Read output value	Reads the output values.	Yes	Yes
103	Read set point, process value, and output value	Reads the set points, process values, and output values.	Yes	Yes
104	Read proportional band, integral time, and derivative time	Reads the proportional bands, integral times, and derivative times.	Yes	Yes
105	Read control period	Reads the control periods.	Yes	Yes
106	Read output mode	Reads the output modes.	Yes	Yes
107	Read alarm mode	Reads the alarm modes.	Yes	Yes
108	Read alarm temperature	Reads the alarm temperatures.	Yes	Yes
109	Read hysteresis	Reads the hysteresis.	Yes	Yes
110	Read operation status	Reads the operation status.	Yes	Yes
111	Read error status	Reads the error status.	Yes	Yes
112	Read setting unit	Reads the setting units.	Yes	Yes
113	Read input shift value	Reads the input shift values.	Yes	Yes
114	Read manual reset value	Reads the manual reset values.	Yes	Yes
115	Read ramp value	Reads the ramp values.	Yes	Yes
116	Read present set point	Reads the present set points.	Yes	Yes
117	Read output value limits	Reads the output value limits.	Yes	Yes
118	Read output value change rate limit	Reads the output value change rate limits.	Yes	Yes
119	Read HB alarm and HS alarm valid channels	Reads the HB alarm and HS alarm valid channels.	Yes	Yes
120	Read heater burnout/SSR failure detection currents	Reads the heater burnout/SSR failure detection currents.	Yes	Yes
121	Read heater current and SSR leakage current	Reads the heater currents and SSR leakage currents.	Yes	Yes
122	Read dead band/overlap band	Reads the dead bands and overlap bands.	Yes	Yes
123	Read cooling coefficient	Reads the cooling coefficients.	Yes	Yes

Note Ladder Interface Settings

YES: User settings are required for the 2nd or 3rd operands of PMCR.

NO: Send word allocation: Set the constant 0000 for the 2nd operand (S).
Receive word allocation: Set a dummy word (e.g., DM0000) address for the 3rd operand (D).

Connections

This section shows connections for using the E5ZE Temperature Controller Read Protocol.

RS-232C Connections

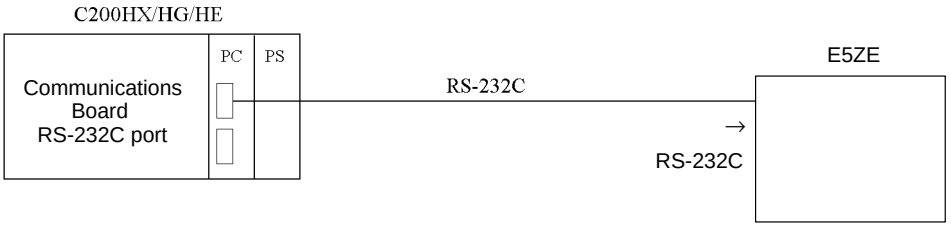

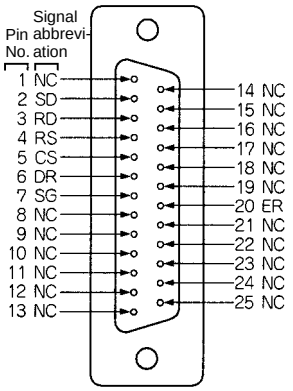

Signal name	Abbreviation	Signal direction	Pin No.
Signal ground or common return line	SG	–	7
Send data	SD	Output	2
Receive data	RD	Input	3
Request to send	RS	Output	4
Clear to send	CS	Input	5
Data set ready	DR	Input	6
Data terminal ready	ER	Output	20
Disabled (Do not connect.)	NC	–	1, 8 to 19, 21 to 25

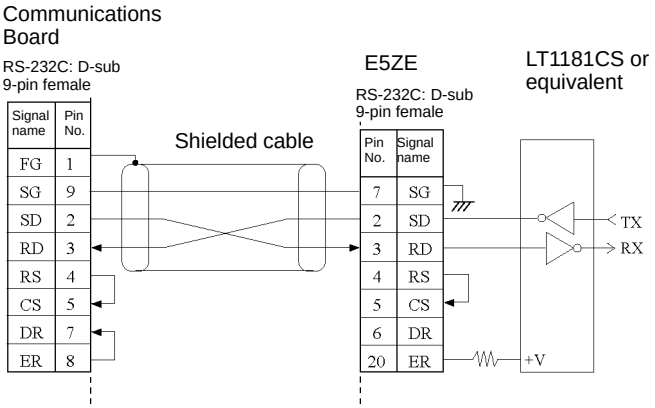

Note 1. The maximum communications cable length is 15 m. Use a shielded twisted-pair cable (AWG28 or greater) for the cable.

2. Use a 25-pin D-sub Plug (OMRON XM2A-2501).

3. Use XM2S-2511 Hood (OMRON) or an equivalent.

RS-422/485 Connections

- **RS-485**

Pin No.	Signal name	Abbreviation	Signal direction
1	Disabled (Do not connect.)	–	–
2	Disabled (Do not connect.)	–	–
3	Signal ground	SG	–
4	Terminal B (+ side)	B	I/O
5	Terminal A (– side)	A	I/O

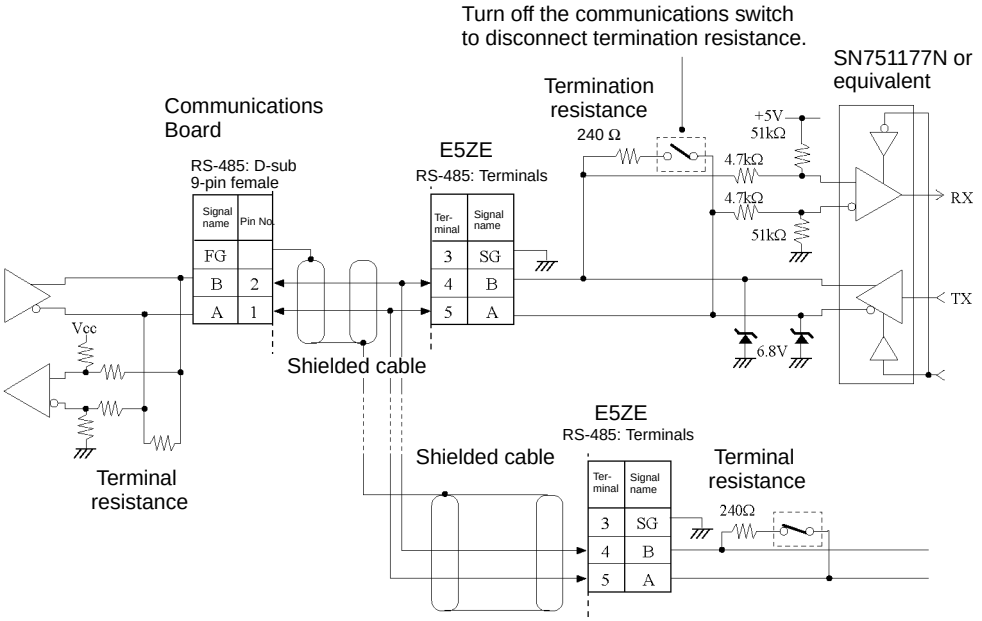

Note Terminal block pins 1 and 2 cannot be connected. If these blocks are used, operation of the E5ZE may fail.

- **RS-422A**

Pin No.	Signal name	Abbreviation	Signal direction
1	Receive data B	RDB	Input
2	Receive data A	RDA	Input
3	Signal ground	SG	–
4	Send data B	SDB	Output
5	Send data A	SDA	Output

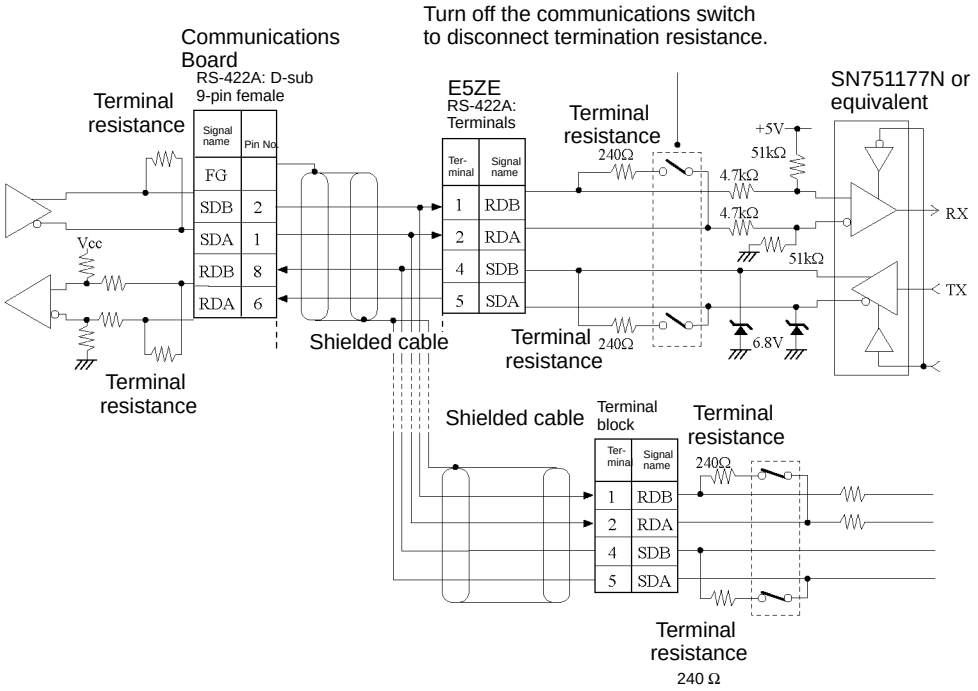

Switch Settings

This section shows the switch settings for using the E5ZE Temperature Controller Read Protocol.

Communications Parameter DIP Switch

Pins 3 and 4: Terminal resistance
Pins 1 and 2: RS-422A/RS-485

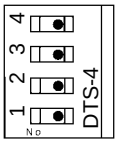

Factory defaults: All OFF

Pins	Parameter		RS-422A	RS-485
3 and 4	Terminal resistance	ON	ON ▶ ON ▶	OFF ▶ ON ▶
		OFF	OFF ▶ OFF ▶	OFF ▶ OFF ▶
1 and 2	RS-422A or RS-485		OFF ▶ OFF ▶	ON ▶ ON ▶

Unit Number Switch

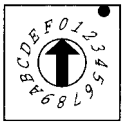

UNIT

Setting	0	1	2	3	4	5	6	7	8	9	A	B	C	D	E	F
Unit No.	00	01	02	03	04	05	06	07	08	09	0A	0B	0C	0D	0E	0F

▲ Factory defaults

Baud Rate DIP Switch

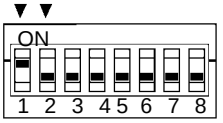

FUNCTION

Factory default: 9,600 bps
(pin 1 ON, pin 2 OFF)

Baud rate (bps)	19,200	9,600	4,800	2,400
Pins 1 and 2	ON 1 2 OFF OFF	ON 1 2 ON OFF	ON 1 2 OFF ON	ON 1 2 ON ON

Read Set Point (Sequence No. 100)

Reads the set points and stores the results in the specified words.

Send Data Word Allocation (2nd Operand of PMCR)

First word of send data	+0	Number of send data words	
	+1	(Undefined)	Unit No.

Offset	Contents (data format)	Data
+0	Number of send data words (4 digits BCD)	0002 (fixed)
+1	Unit No. (2 digits Hex)	00 to 0F

Receive Data Word Allocation (3rd Operand of PMCR)

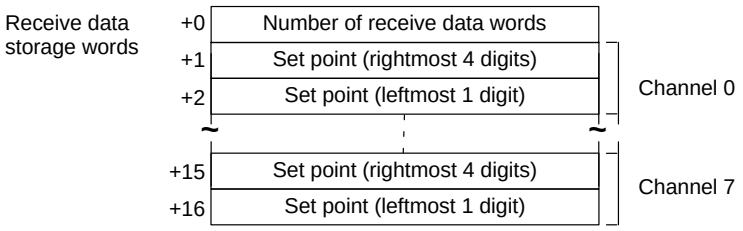

Offset	Contents (data format)	Data
+0	Number of receive data words (4 digits BCD)	0017
+1	Channel 0 Set point (rightmost 4 digits) (4 digits BCD)	Varies according to the temperature sensor type. Refer to the manual for the E5ZE. F indicates a negative value.
+2	Channel 0 Set point (leftmost 1 digit) (1 digit BCD)	
	• • •	
+15	Channel 7 Set point (rightmost 4 digits) (4 digits BCD)	Varies according to the temperature sensor type. Refer the manual for the E5ZE. F indicates a negative value.
+16	Channel 7 Set point (leftmost 1 digit) (1 digit BCD)	

Read Process Value (Sequence No. 101)

Reads the process values and stores the results in the specified words.

Send Data Word Allocation (2nd Operand of PMCR)

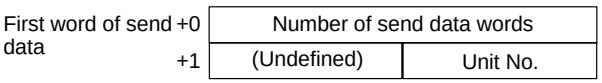

Offset	Contents (data format)	Data
+0	Number of send data words (4 digits BCD)	0002 (fixed)
+1	Unit No. (2 digits Hex)	00 to 0F

Receive Data Word Allocation (3rd Operand of PMCR)

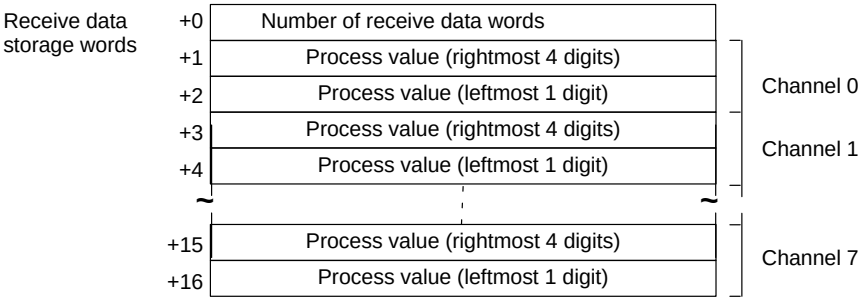

Offset	Contents (data format)	Data
+0	Number of receive data words (4 digits BCD)	0017
+1	Channel 0 Process value (rightmost 4 digits) (4 digits BCD)	Varies according to the temperature sensor type. Refer to the manual for the E5ZE. F indicates a negative value.
+2	Channel 0 Process value (leftmost 1 digit) (1 digit BCD)	
	• • •	
+15	Channel 7 Process value (rightmost 4 digits) (4 digits BCD)	Varies according to the temperature sensor type. Refer to the manual for the E5ZE. F indicates a negative value.
+16	Channel 7 Process value (leftmost 1 digit) (1 digit BCD)	

Read Output Values (Sequence No. 102)

Reads the output values of the control outputs and stores the results in the specified words.

Send Data Word Allocation (2nd Operand of PMCR)

First word of send data	+0	Number of send data words	
	+1	(Undefined)	Unit No.

Offset	Contents (data format)	Data
+0	Number of send data words (4 digits BCD)	0002 (fixed)
+1	Unit No. (2 digits Hex)	00 to 0F

Receive Data Word Allocation (3rd Operand of PMCR)

Receive data storage words	+0	Number of receive data words	
	+1	Output value	Channel 0
	+2	Cooling output value	
	+3	Output value	Channel 1
	+4	Cooling output value	
	~	~	
	+15	Output value	Channel 7
	+16	Cooling output value	

Offset	Contents (data format)	Data
+0	Number of receive data words (4 digits BCD)	0017
+1	Channel 0 Output value (4 digits BCD)	0000 to 1000
+2	Channel 0 Cooling output value (4 digits BCD)	0000 to 1000
+3	Channel 1 Output value (4 digits BCD)	0000 to 1000
+4	Channel 1 Cooling output value (4 digits BCD)	0000 to 1000
	• • •	
+15	Channel 7 Output value (4 digits BCD)	0000 to 1000
+16	Channel 7 Cooling output value (4 digits BCD)	0000 to 1000

Read Set Point, Process Value, and Output Value (Sequence No. 103)

Reads the set points, process values, and output values and stores the results in the specified words.

Send Data Word Allocation (2nd Operand of PMCR)

First word of send data	+0	Number of send data words	
	+1	(Undefined)	Unit No.

Offset	Contents (data format)	Data
+0	Number of send data words (4 digits BCD)	0002 (fixed)
+1	Unit No. (2 digits Hex)	00 to OF

Receive Data Word Allocation (3rd Operand of PMCR)

Receive data storage words	+0	Number of receive data words	
	+1	Set point (rightmost 4 digits)	Channel 0
	+2	Set point (leftmost 1 digit)	
	+3	Process value (rightmost 4 digits)	
	+4	Process value (leftmost 1 digit)	
	+5	Output value	
	~	~	
	+36	Set point (rightmost 4 digits)	Channel 7
	+37	Set point (leftmost 1 digit)	
	+38	Process value (rightmost 4 digits)	
	+39	Process value (leftmost 1 digit)	
	+40	Output value	

Offset	Contents (data format)	Data
+0	Number of receive data words (4 digits BCD)	0041
+1	Channel 0 Set point (rightmost 4 digits) (4 digits BCD)	Varies according to the temperature sensor type. Refer to the manual for the E5ZE.
+2	Channel 0 Set point (leftmost 1 digit) (1 digit BCD)	
+3	Channel 0 Process value (rightmost 4 digits) (4 digits BCD)	Varies according to the temperature sensor type. Refer to the manual for the E5ZE.
+4	Channel 0 Process value (leftmost 1 digit) (1 digit BCD)	
+5	Channel 0 Output value (4 digits BCD)	0000 to 1000
	• • •	
+36	Channel 7 Set point (rightmost 4 digits) (4 digits BCD)	Varies according to the temperature sensor type. Refer to the manual for the E5ZE.
+37	Channel 7 Set point (leftmost 1 digit) (1 digit BCD)	
+38	Channel 7 Process value (rightmost 4 digits) (4 digits BCD)	Varies according to the temperature sensor type. Refer to the manual for the E5ZE.
+39	Channel 7 Process value (leftmost 1 digit) (1 digit BCD)	
+40	Channel 0 Output value (4 digits BCD)	0000 to 1000

Read Proportional Band, Integral Time, and Derivative Time (Sequence No. 104)

Reads the proportional bands (constant P), integral times (constant I), and derivative times (Constant D) and stores the results in the specified words.

Send Data Word Allocation (2nd Operand of PMCR)

First word of send data			
	+0	Number of send data words	
	+1	(Undefined)	Unit No.

Offset	Contents (data format)	Data
+0	Number of send data words (4 digits BCD)	0002 (fixed)
+1	Unit No. (2 digits Hex)	00 to 0F

Receive Data Word Allocation (3rd Operand of PMCR)

Receive data storage words			
	+0	Number of receive data words	
	+1	Constant P	Channel 0
	+2	Constant I	
	+3	Constant D	
	~	~	
	+22	Constant P	Channel 7
	+23	Constant I	
	+24	Constant D	

Offset	Contents (data format)	Data
+0	Number of receive data words (4 digits BCD)	0025
+1	Channel 0 Constant P (4 digits BCD)	0000 to 9999
+2	Channel 0 Constant I (4 digits BCD)	0000 to 3999
+3	Channel 0 Constant D (4 digits BCD)	0000 to 3999
	• • •	
+22	Channel 7 Constant P (4 digits BCD)	0000 to 9999
+2 3	Channel 7 Constant I (4 digits BCD)	0000 to 3999
+24	Channel 7 Constant D (4 digits BCD)	0000 to 3999

Read Control Period (Sequence No. 105)

Reads the control periods and stores the results in the specified words.

Send Data Word Allocation (2nd Operand of PMCR)

First word of send data			
	+0	Number of send data words	
	+1	(Undefined)	Unit No.

Offset	Contents (data format)	Data
+0	Number of send data words (4 digits BCD)	0002 (fixed)
+1	Unit No. (2 digits Hex)	00 to 0F

Receive Data Word Allocation (3rd Operand of PMCR)

Receive data storage words			
	+0	Number of receive data words	
	+1	Control period	Channel 0
	+2	Cooling control period	
	+3	Control period	Channel 1
	+4	Cooling control period	
	~	~	
	+15	Control period	Channel 7
	+16	Cooling control period	

Offset	Contents (data format)	Data
+0	Number of receive data words (4 digits BCD)	0017
+1	Channel 0 Control period (4 digits BCD)	0001 to 0099
+2	Channel 0 Cooling control period (4 digits BCD)	0001 to 0099
	• • •	
+15	Channel 7 Control period (4 digits BCD)	0001 to 0099
+16	Channel 7 Cooling control period (4 digits BCD)	0001 to 0099

Read Output Mode (Sequence No. 106)

Reads the output modes (normal/reverse) and stores the results in the specified words.

Send Data Word Allocation (2nd Operand of PMCR)

First word of send data	+0	Number of send data words	
	+1	(Undefined)	Unit No.

Offset	Contents (data format)	Data
+0	Number of send data words (4 digits BCD)	0002 (fixed)
+1	Unit No. (2 digits Hex)	00 to 0F

Receive Data Word Allocation (3rd Operand of PMCR)

Receive data storage words	+0	Number of receive data words	
	+1	(Undefined)	Set code

Offset	Contents (data format)	Data
+0	Number of receive data words (4 digits BCD)	0002
+1	Set code (2 digits Hex)	00 to FF

Read Alarm Mode (Sequence No. 107)

Reads the alarm modes and stores the results in the specified words.

Send Data Word Allocation (2nd Operand of PMCR)

First word of send data	+0	Number of send data words	
	+1	(Undefined)	Unit No.

Offset	Contents (data format)	Data
+0	Number of send data words (4 digits BCD)	0002 (fixed)
+1	Unit No. (2 digits Hex)	00 to 0F

Receive Data Word Allocation (3rd Operand of PMCR)

Receive data storage words	+0	Number of receive data words		
	+1	(Undefined)	Alarm 1 set code	Channel 0
	+2	(Undefined)	Alarm 2 set code	
	+3	(Undefined)	Alarm 1 set code	Channel 1
	+4	(Undefined)	Alarm 2 set code	
	~		~	
	+15	(Undefined)	Alarm 1 set code	Channel 7
	+16	(Undefined)	Alarm 2 set code	

Offset	Contents (data format)	Data
+0	Number of receive data words (4 digits BCD)	0017
+1	Channel 0 Alarm 1 set code (2 digits Hex)	00 to 0C
+2	Channel 0 Alarm 2 set code (2 digits Hex)	00 to 0C
	• • •	
+15	Channel 7 Alarm 1 set code (2 digits Hex)	00 to 0C
+16	Channel 7 Alarm 2 set code (2 digits Hex)	00 to 0C

Read Alarm Temperatures (Sequence No. 108)

Reads the alarm temperatures and stores the results in the specified words.

Send Data Word Allocation (2nd Operand of PMCR)

First word of send data			
	+0	Number of send data words	
	+1	(Undefined)	Unit No.

Offset	Contents (data format)	Data
+0	Number of send data words (4 digits BCD)	0002 (fixed)
+1	Unit No. (2 digits Hex)	00 to 0F

Receive Data Word Allocation (3rd Operand of PMCR)

Receive data storage words			
	+0	Number of receive data words	
	+1	Alarm 1 set value (rightmost 4 digits)	Channel 0
	+2	Alarm 1 set value (leftmost 1 digit)	
	+3	Alarm 2 set value (rightmost 4 digits)	
	+4	Alarm 2 set value (leftmost 1 digit)	
	~	~	
	+29	Alarm 1 set value (rightmost 4 digits)	Channel 7
	+30	Alarm 1 set value (rightmost 1 digit)	
	+31	Alarm 2 set value (rightmost 4 digits)	
	+32	Alarm 2 set value (leftmost 1 digit)	

Offset	Contents (data format)	Data
+0	Number of receive data words (4 digits BCD)	0033
+1	Channel 0 Alarm 1 set value (rightmost 4 digits) (4 digits BCD)	0000 to 9999 F indicates a negative number.
+2	Channel 0 Alarm 1 set value (leftmost 1 digit) (4 digits BCD)	0000 to 0009 F indicates a negative number.
+3	Channel 0 Alarm 2 set value (rightmost 4 digits) (4 digits BCD)	0000 to 9999 F indicates a negative number.
+4	Channel 0 Alarm 2 set value (leftmost 1 digit) (4 digits BCD)	0000 to 0009 F indicates a negative number.
	• • •	
+29	Channel 7 Alarm 1 set value (rightmost 4 digits) (4 digits BCD)	0000 to 9999 F indicates a negative number.
+30	Channel 7 Alarm 1 set value (leftmost 1 digit) (4 digits BCD)	0000 to 0009 F indicates a negative number.
+31	Channel 7 Alarm 2 set value (rightmost 4 digits) (4 digits BCD)	0000 to 9999 F indicates a negative number.
+32	Channel 07 Alarm 2 set value (leftmost 1 digit) (4 digits BCD)	0000 to 0009 F indicates a negative number.

Read Hysteresis (Sequence No. 109)

Reads the hysteresis and stores the results in the specified words.

Send Data Word Allocation (2nd Operand of PMCR)

First word of send data	+0	Number of send data words	
	+1	(Undefined)	Unit No.

Offset	Contents (data format)	Data
+0	Number of send data words (4 digits BCD)	0002 (fixed)
+1	Unit No. (2 digits Hex)	00 to 0F

Receive Data Word Allocation (3rd Operand of PMCR)

Receive data storage words	+0	Number of receive data words	
	+1	Hysteresis	Channel 0
	+2	Cooling hysteresis	
	+3	Hysteresis	Channel 1
	+4	Cooling hysteresis	
	~	~	
	+15	Hysteresis	Channel 7
	+16	Cooling hysteresis	

Offset	Contents (data format)	Data
+0	Number of receive data words (4 digits BCD)	0017
+1	Channel 0 Hysteresis (4 digits BCD)	0000 to 0999
+2	Channel 0 Cooling hysteresis (4 digits BCD)	0000 to 0999
	• • •	
+15	Channel 7 Hysteresis (4 digits BCD)	0000 to 0999
+16	Channel 7 Cooling hysteresis (4 digits BCD)	0000 to 0999

Read Operation Status (Sequence No. 110)

Reads the operation status of the E5ZE and stores the results in the specified words.

Send Data Word Allocation (2nd Operand of PMCR)

First word of send data	+0	Number of send data words	
	+1	(Undefined)	Unit No.

Offset	Contents (data format)	Data
+0	Number of send data words (4 digits BCD)	0002 (fixed)
+1	Unit No. (2 digits Hex)	00 to 0F

Receive Data Word Allocation (3rd Operand of PMCR)

Receive data storage words	+0	Number of receive data words	
	+1	Status code	Channel 0
	+2	Status code	Channel 1
	~	~	
	+8	Status code	Channel 7

Offset	Contents (data format)	Data
+0	Number of receive data words (4 digits BCD)	0009
+1	Channel 0 Status code (4 digits Hex)	0000 to FFFF
+2	Channel 1 Status code (4 digits Hex)	0000 to FFFF
	• • •	
+8	Channel 7 Status code (4 digits Hex)	0000 to FFFF

Read Error Status (Sequence No. 111)

Reads the contents of errors if they have occurred and stores the results in the specified words.

Send Data Word Allocation (2nd Operand of PMCR)

First word of send data	+0	Number of send data words	
	+1	(Undefined)	Unit No.

Offset	Contents (data format)	Data
+0	Number of send data words (4 digits BCD)	0002 (fixed)
+1	Unit No. (2 digits Hex)	00 to 0F

Receive Data Word Allocation (3rd Operand of PMCR)

Receive data storage words	+0	Number of receive data words
	+1	Status code

Offset	Contents (data format)	Data
+0	Number of receive data words (4 digits BCD)	0009
+1	Status code (4 digits BCD)	0000 to FFFF

Read Setting Unit (Sequence No. 112)

Reads the setting units and stores the results in the specified words.

Send Data Word Allocation (2nd Operand of PMCR)

First word of send data	+0	Number of send data words	
	+1	(Undefined)	Unit No.

Offset	Contents (data format)	Data
+0	Number of send data words (4 digits BCD)	0002 (fixed)
+1	Unit No. (2 digits Hex)	00 to 0F

Receive Data Word Allocation (3rd Operand of PMCR)

Receive data storage words	+0	Number of receive data words
	+1	Set code

Offset	Contents (data format)	Data
+0	Number of receive data words (4 digits BCD)	0002
+1	Set code (4 digits BCD)	0000: unit of 1 0001: unit of 0.1

Read Input Shift Value (Sequence No. 113)

Reads the input shift values and stores the results in the specified words.

Send Data Word Allocation (2nd Operand of PMCR)

First word of send data	+0	Number of send data words	
	+1	(Undefined)	Unit No.

Offset	Contents (data format)	Data
+0	Number of send data words (4 digits BCD)	0002 (fixed)
+1	Unit No. (2 digits Hex)	00 to 0F

Receive Data Word Allocation (3rd Operand of PMCR)

Receive data storage words	+0	Number of receive data words	
	+1	Input shift value	Channel 0
	+2	Input shift value	Channel 1
	~	~	
	+8	Input shift value	Channel 7

Offset	Contents (data format)	Data
+0	Number of receive data words (4 digits BCD)	0009
+1	Channel 0 Input shift value (4 digits BCD)	0000 to 0999 F indicates a negative number.
+2	Channel 1 Input shift value (4 digits BCD)	0000 to 0999 F indicates a negative number.
	• • •	
+8	Channel 7 Input shift value (4 digits BCD)	0000 to 0999 F indicates a negative number.

Read Manual Reset Value (Sequence No. 114)

Reads the manual reset value and stores the results in the specified words.

Send Data Word Allocation (2nd Operand of PMCR)

First word of send data	+0	Number of send data words	
	+1	(Undefined)	Unit No.

Offset	Contents (data format)	Data
+0	Number of send data words (4 digits BCD)	0002 (fixed)
+1	Unit No. (2 digits Hex)	00 to 0F

Receive Data Word Allocation (3rd Operand of PMCR)

Receive data storage words	+0	Number of receive data words	
	+1	Manual reset value	Channel 0
	+2	Manual reset value	Channel 1
	~	~	
	+8	Manual reset value	Channel 7

Offset	Contents (data format)	Data
+0	Number of receive data words (4 digits BCD)	0009
+1	Channel 0 Manual reset value (4 digits BCD)	0000 to 1000
+2	Channel 1 Manual reset value (4 digits BCD)	0000 to 1000
	• • •	
+8	Channel 7 Manual reset value (4 digits BCD)	0000 to 1000

Read Ramp Value (Sequence No. 115)

Reads the ramp values and stores the results in the specified words.

Send Data Word Allocation (2nd Operand of PMCR)

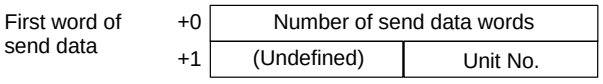

Offset	Contents (data format)	Data
+0	Number of send data words (4 digits BCD)	0002 (fixed)
+1	Unit No. (2 digits Hex)	00 to 0F

Receive Data Word Allocation (3rd Operand of PMCR)

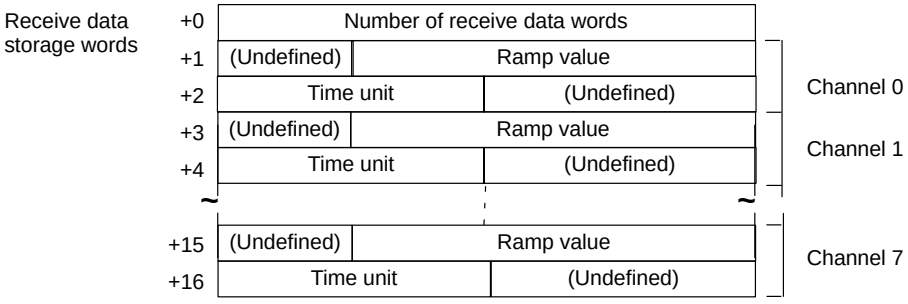

Offset	Contents (data format)	Data
+0	Number of receive data words (4 digits BCD)	0017
+1	Channel 0 Ramp value (3 digits BCD)	000 to 999
+2	Channel 0 Time unit (one ASCII character)	S: Seconds; M: Minutes; H: Hours
	• • •	
+15	Channel 7 Ramp value (3 digits BCD)	000 to 999
+16	Channel 7 Time unit (one ASCII character)	S: Seconds; M: Minutes; H: Hours

Read Present Set Point (Sequence No. 116)

Reads the present set points during ramp operation and stores the results in the specified word.

Send Data Word Allocation (2nd Operand of PMCR)

First word of send data	+0	Number of send data words	
	+1	(Undefined)	Unit No.

Offset	Contents (data format)	Data
+0	Number of send data words (4 digits BCD)	0002 (fixed)
+1	Unit No. (2 digits Hex)	00 to 0F

Receive Data Word Allocation (3rd Operand of PMCR)

Receive data storage words	+0	Number of receive data words	Channel 0
	+1	Present set point (rightmost 4 digits)	
	+2	Present set point (leftmost 1 digit)	
	~	~	
	+15	Present set point (rightmost 4 digits)	Channel 7
	+16	Present set point (leftmost 1 digit)	

Offset	Contents (data format)	Data
+0	Number of receive data words (4 digits BCD)	0017
+1	Channel 0 Present set point (rightmost 4 digits) (4 digits BCD)	Varies according to the temperature sensor type. Refer to the manual for the E5ZE. F indicates a negative value.
+2	Channel 0 Present set point (leftmost 1 digit) (1 digit BCD)	
	• • •	
+15	Channel 7 Present set point (rightmost 4 digits) (4 digits BCD)	Varies according to the temperature sensor type. Refer to the manual for the E5ZE. F indicates a negative value.
+16	Channel 7 Present set point (leftmost 1 digit) (1 digit BCD)	

Read Output Value Limit (Sequence No. 117)

Reads the output value limits and stores the results in the specified words.

Send Data Word Allocation (2nd Operand of PMCR)

First word of send data	+0	Number of send data words	
	+1	(Undefined)	Unit No.

Offset	Contents (data format)	Data
+0	Number of send data words (4 digits BCD)	0002 (fixed)
+1	Unit No. (2 digits Hex)	00 to 0F

Receive Data Word Allocation (3rd Operand of PMCR)

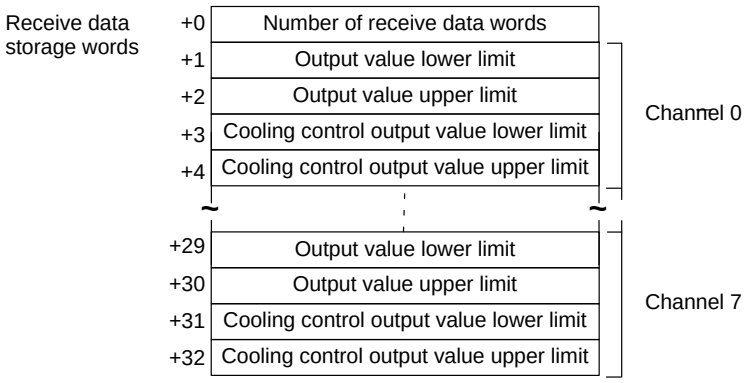

Offset	Contents (data format)	Data
+0	Number of receive data words (4 digits BCD)	0033
+1	Channel 0 Output value lower limit (4 digits BCD)	0000 to 1000
+2	Channel 0 Output value upper limit (4 digits BCD)	0000 to 1000
+3	Channel 0 Cooling control output value upper limit (4 digits BCD)	0000 to 1000
+4	Channel 0 Cooling control output value upper limit (4 digits BCD)	0000 to 1000
	• • •	
+31	Channel 7 Cooling control output value upper limit (4 digits BCD)	0000 to 1000
+32	Channel 7 Cooling control output value upper limit (4 digits BCD)	0000 to 1000

Read Output Value Change Rate Limit (Sequence No. 118)

Reads the output value change rate limits and stores the results in the specified words.

Send Data Word Allocation (2nd Operand of PMCR)

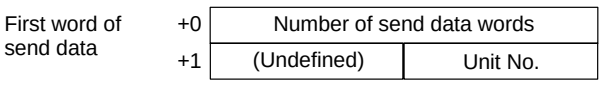

Offset	Contents (data format)	Data
+0	Number of send data words (4 digits BCD)	0002 (fixed)
+1	Unit No. (2 digits Hex)	00 to 0F

Receive Data Word Allocation (3rd Operand of PMCR)

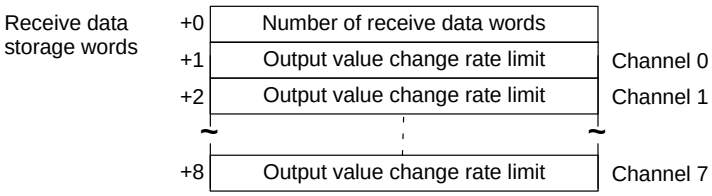

Offset	Contents (data format)	Data
+0	Number of receive data words (4 digits BCD)	0009
+1	Channel 0 Output value change rate limit (4 digits BCD)	0000 to 1000
+2	Channel 1 Output value change rate limit (4 digits BCD)	0000 to 1000
	• • •	
+8	Channel 7 Output value change rate limit (4 digits BCD)	0000 to 1000

Read HB Alarm and HS Alarm Valid Channels (Sequence No. 119)

Reads the valid or invalid channels for HB alarms and HS alarms and stores the results in the specified words.

Send Data Word Allocation (2nd Operand of PMCR)

First word of send data	+0	Number of send data words	
	+1	(Undefined)	Unit No.

Offset	Contents (data format)	Data
+0	Number of send data words (4 digits BCD)	0002 (fixed)
+1	Unit No. (2 digits Hex)	00 to 0F

Receive Data Word Allocation (3rd Operand of PMCR)

Receive data storage words	+0	Number of receive data words	
	+1	(Undefined)	Set code

Offset	Contents (data format)	Data
+0	Number of receive data words (4 digits BCD)	0009
+1	Set code (2 digits Hex)	00 to FF

Read Heater Burnout and SSR Failure Detection Currents (Sequence No. 120)

Reads the heater burnout and SSR failure detection currents and stores the results in the specified words.

Send Data Word Allocation (2nd Operand of PMCR)

First word of send data	+0	Number of send data words	
	+1	(Undefined)	Unit No.

Offset	Contents (data format)	Data
+0	Number of send data words (4 digits BCD)	0002 (fixed)
+1	Unit No. (2 digits Hex)	00 to 0F

Receive Data Word Allocation (3rd Operand of PMCR)

Receive data storage words			
+0	Number of receive data words		
+1	Heater burnout detection current	Channel 0	
+2	SSR failure detection current		
+3	Heater burnout detection current	Channel 1	
+4	SSR failure detection current		
~	~		
+15	Heater burnout detection current	Channel 7	
+16	SSR failure detection current		

Offset	Contents (data format)	Data
+0	Number of receive data words (4 digits BCD)	0017
+1	Channel 0 Heater burnout detection current (4 digits BCD)	0000 to 0500
+2	Channel 0 SSR failure detection current (4 digits BCD)	0000 to 0500
	• • •	
+15	Channel 7 Heater burnout detection current (4 digits BCD)	0000 to 0500
+16	Channel 7 SSR failure detection current (4 digits BCD)	0000 to 0500

Read Heater Current and SSR Leakage Current (Sequence No.121)

Reads the heater currents and SSR leakage currents and stores the results in the specified words.

Send Data Word Allocation (2nd Operand of PMCR)

First word of send data		
+0	Number of send data words	
+1	(Undefined)	Unit No.

Offset	Contents (data format)	Data
+0	Number of send data words (4 digits BCD)	0002 (fixed)
+1	Unit No. (2 digits Hex)	00 to 0F

Receive Data Word Allocation (3rd Operand of PMCR)

Receive data storage words			
+0	Number of receive data words		
+1	Heater current	Channel 0	
+2	SSR leakage current		
+3	Heater current	Channel 1	
+4	SSR leakage current		
~	~		
+15	Heater current	Channel 7	
+16	SSR leakage current		

Offset	Contents (data format)	Data
+0	Number of receive data words (4 digits BCD)	0017
+1	Channel 0 Heater current (4 digits BCD)	0000 to 0500
+2	Channel 0 SSR leakage current (4 digits BCD)	0000 to 0500
	• • •	
+15	Channel 7 Heater current (4 digits BCD)	0000 to 0500
+16	Channel 7 SSR leakage current (4 digits BCD)	0000 to 0500

Note The read data will be 0000 for all channels for which HB and HS alarms are not enabled and for all channels for which control is stopped.

Read Dead Band/Overlap Band (Sequence No. 122)

Reads the dead bands/overlap bands and stores the results in the specified words.

Send Data Word Allocation (2nd Operand of PMCR)

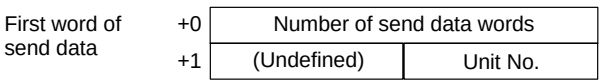

Offset	Contents (data format)	Data
+0	Number of send data words (4 digits BCD)	0002 (fixed)
+1	Unit No. (2 digits Hex)	00 to 0F

Receive Data Word Allocation (3rd Operand of PMCR)

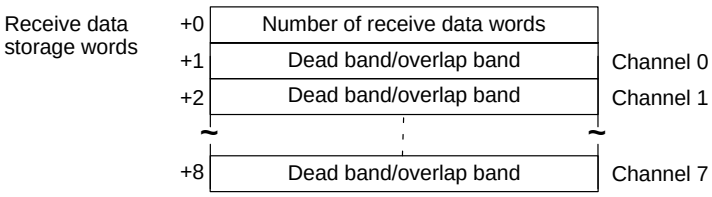

Offset	Contents (data format)	Data
+0	Number of receive data words (4 digits BCD)	0009
+1	Channel 0 Dead band/overlap band (4 digits BCD)	0000 to 0999 F indicates a number.
+2	Channel 1 Dead band/overlap band (4 digits BCD)	0000 to 0999 F indicates a number.
	• • •	
+8	Channel 7 Dead band/overlap band (4 digits BCD)	0000 to 0999 F indicates a number.

Read Cooling Coefficient (Sequence No. 123)

Reads the cooling coefficients and stores the results in the specified words.

Send Data Word Allocation (2nd Operand of PMCR)

First word of send data	+0	Number of send data words	
	+1	(Undefined)	Unit No.

Offset	Contents (data format)	Data
+0	Number of send data words (4 digits BCD)	0002 (fixed)
+1	Unit No. (2 digits Hex)	00 to 0F

Receive Data Word Allocation (3rd Operand of PMCR)

Receive data storage words	+0	Number of receive data words	
	+1	Cooling coefficient	Channel 0
	+2	Cooling coefficient	Channel 1
	~	~	
	+8	Cooling coefficient	Channel 7

Offset	Contents (data format)	Data
+0	Number of receive data words (4 digits BCD)	0009
+1	Channel 0 Cooling coefficient (4 digits BCD)	0000 to 0100
+2	Channel 1 Cooling coefficient (4 digits BCD)	0000 to 0100
	• • •	
+8	Channel 7 Cooling coefficient (4 digits BCD)	0000 to 0100

Appendix D
E5ZE Temperature Controller Write Protocol

The E5ZE Temperature Controller Write Protocol writes and controls various settings in remote mode for the Temperature Controller connected via a RS-232C or RS-422A/485 cable from the PC via the Communications Board.

Note 1. Negative values cannot be written. All values must be set as unsigned BCD.
2. All sequences in this appendix operate on memory bank 0 and cannot be used for other memory banks.

Structure of the Protocol

The following table shows the structure of the E5ZE Temperature Controller Write Protocol.

Sequence No.	Communications sequence name	Function	Ladder interface	
			Send word allocation	Receive word allocation
150	Write set point (setting unit 1)	Writes the set points using a setting unit of 1.	Yes	No
151	Write set point (setting unit 0.1)	Writes the set points using a setting unit of 0.1.	Yes	No
152	Write proportional band, integral time, and derivative time	Writes the proportional bands, integral times, and derivative times.	Yes	No
153	Write control period	Writes the control periods.	Yes	No
154	Write output mode	Writes the output modes.	Yes	No
155	Write alarm mode	Writes the alarm modes.	Yes	No
156	Write alarm temperature (setting unit 1)	Writes the alarm temperatures using a setting unit of 1.	Yes	No
157	Write alarm temperature (setting unit 0.1)	Writes the alarm temperatures using a setting unit of 0.1.	Yes	No
158	Write hysteresis	Writes the hysteresis.	Yes	No
159	Start autotuning	Starts autotuning.	Yes	No
160	Cancel autotuning	Cancels autotuning.	Yes	No
161	Write setting unit	Writes the setting units.	Yes	No
162	Write input shift value	Writes the input shift values.	Yes	No
163	Write manual reset value	Writes the manual reset values.	Yes	No
164	Write ramp value	Writes the ramp values.	Yes	No
165	Write manual output value	Writes the manual output values.	Yes	No
166	Write output value limit	Writes the output value limits.	Yes	No
167	Write output value change rate limit	Write output value change rate limits.	Yes	No
168	Save settings	Saves settings.	Yes	No
169	Initialize settings	Initializes settings.	Yes	No
170	Write HB alarm and HS alarm valid channels	Writes the HB alarm and HS alarm valid channels.	Yes	No
171	Write heater burnout and SSR failure detection currents	Writes the heater burnout and SSR failure detection currents.	Yes	No
172	Write dead band/overlap band	Writes the dead bands/overlap bands.	Yes	No
173	Write cooling coefficient	Writes the cooling coefficients.	Yes	No
174	Start control	Starts temperature control.	Yes	No
175	Stop operation or control	Stops temperature control or manual operation.	Yes	No
176	Start manual operation	Starts manual operation.	Yes	No

Note Ladder Interface Settings

YES: User settings are required for the 2nd or 3rd operands of PMCR.

NO: Send word allocation: Set the constant 0000 for the 2nd operand (S).
Receive word allocation: Set a dummy word (e.g., DM0000) address for the 3rd operand (D).

Connections

The connections are the same as that for the E5ZE Temperature Controller Read Protocol.

Write Set Point (Setting Unit 1) (Sequence No. 150)

Writes the set points using a setting unit of 1 (4 digits).

Send Data Word Allocation (2nd Operand of PMCR)

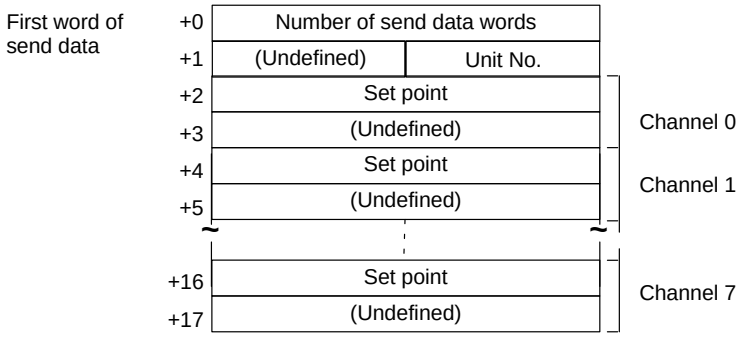

Offset	Contents (data format)	Data
+0	Number of send data words (4 digits BCD)	0018 (fixed)
+1	Unit No. (2 digits Hex)	00 to 0F
+2	Channel 0 Set point (4 digits BCD)	Varies according to the temperature sensor type. Refer to the manual for the E5ZE.
	• • •	
+16	Channel 7 Set point (4 digits BCD)	Varies according to the temperature sensor type. Refer to the manual for the E5ZE.
+17	Not used	---

Receive Data Word Allocation (3rd Operand of PMCR)

None.

Note When the setting unit for the set point is 0.1 (5 digits), use Write Set Point (Setting Unit 0.1), Sequence No.151.

Write Set Point (Setting Unit 0.1) (Sequence No. 151)

Writes the set points using a setting unit of 0.1 (5 digits).

Send Data Word Allocation (2nd Operand of PMCR)

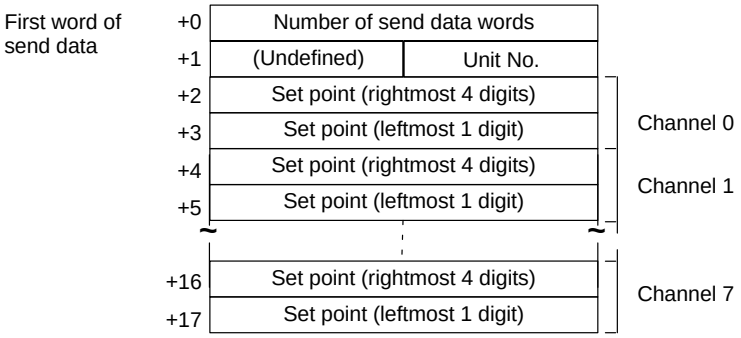

Offset	Contents (data format)	Data
+0	Number of send data words (4 digits BCD)	0018 (fixed)
+1	Unit No. (2 digits Hex)	00 to 0F
+2	Channel 0 Set point (rightmost 4 digits) (4 digits BCD)	Varies according to the temperature sensor type. Refer to the manual for the E5ZE.
+3	Channel 0 Set point (leftmost 1 digit) (1 digit BCD)	
	• • •	
+16	Channel 7 Set point (rightmost 4 digits) (4 digits BCD)	Varies according to the temperature sensor type. Refer to the manual for the E5ZE.
+17	Channel 7 Set point (rightmost 1 digit) (1 digit BCD)	

Receive Data Word Allocation (3rd Operand of PMCR)

None.

Note When the setting unit for the set point is 1 (4 digits), use Write Set Point (Setting Unit 1), Sequence No.150.

Write Proportional Band, Integral Time, and Derivative Time (Sequence No. 152)

Writes the proportional bands (constant P), integral times (constant I), and derivative times (constant D).

Send Data Word Allocation (2nd Operand of PMCR)

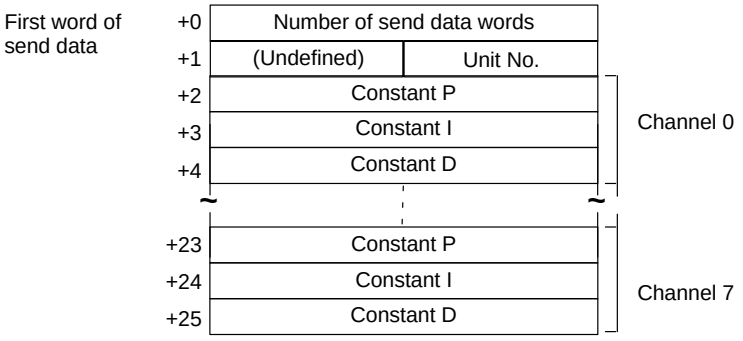

Offset	Contents (data format)	Data
+0	Number of send data words (4 digits BCD)	0026 (fixed)
+1	Unit No. (2 digits Hex)	00 to 0F
+2	Channel 0 Constant P (4 digits BCD)	0000 to 9999
+3	Channel 0 Constant I (4 digits BCD)	0000 to 3999
+4	Channel 0 Constant D (4 digits BCD)	0000 to 3999
	• • •	
+23	Channel 7 Constant P (4 digits BCD)	0000 to 9999
+24	Channel 7 Constant I (4 digits BCD)	0000 to 3999
+25	Channel 7 Constant D (4 digits BCD)	0000 to 3999

Receive Data Word Allocation (3rd Operand of PMCR)

None.

Write Control Period (Sequence No. 153)

Writes the control periods and cooling control periods.

Send Data Word Allocation (2nd Operand of PMCR)

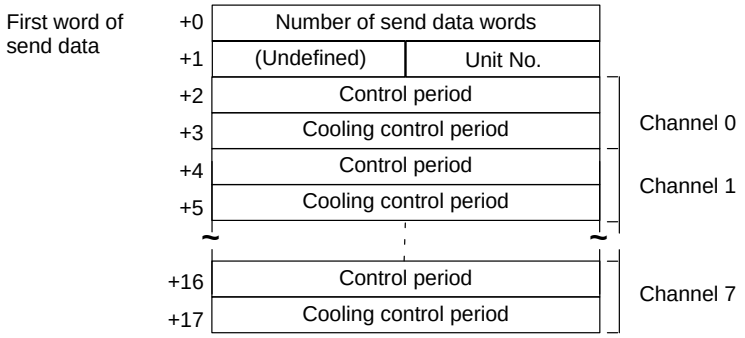

Offset	Contents (data format)	Data
+0	Number of send data words (4 digits BCD)	0018 (fixed)
+1	Unit No. (2 digits Hex)	00 to 0F
+2	Channel 0 Control period (4 digits BCD)	0001 to 0099
+3	Channel 0 Cooling control period (4 digits BCD)	0001 to 0099
+4	Channel 1 Control period (4 digits BCD)	0001 to 0099
+5	Channel 1 Cooling control period (4 digits BCD)	0001 to 0099
	• • •	
+16	Channel 7 Control period (4 digits BCD)	0001 to 0099
+17	Channel 7 Cooling control period (4 digits BCD)	0001 to 0099

Receive Data Word Allocation (3rd Operand of PMCR)

None.

Write Output Mode (Sequence No. 154)

Writes the output mode (normal/reverse).

Send Data Word Allocation (2nd Operand of PMCR)

First word of send data	+0	Number of send data words	
	+1	(Undefined)	Unit No.
	+2	(Undefined)	Write code

Offset	Contents (data format)	Data
+0	Number of send data words (4 digits BCD)	0003 (fixed)
+1	Unit No. (2 digits Hex)	00 to 0F
+2	Write code (2 digits Hex)	00 to FF

Receive Data Word Allocation (3rd Operand of PMCR)

None.

Write Alarm Mode (Sequence No. 155)

Writes the alarm modes for alarm 1 and alarm 2.

Send Data Word Allocation (2nd Operand of PMCR)

First word of send data				
	+0	Number of send data words		
	+1	(Undefined)	Unit No.	
	+2	(Undefined)	Alarm 1 set code	Channel 0
	+3	(Undefined)	Alarm 2 set code	
	+4	(Undefined)	Alarm 1 set code	Channel 1
	+5	(Undefined)	Alarm 2 set code	
	~		~	
	+16	(Undefined)	Alarm 1 set code	Channel 7
	+17	(Undefined)	alarm 2 set code	

Offset	Contents (data format)	Data
+0	Number of send data words (4 digits BCD)	0018 (fixed)
+1	Unit No. (2 digits Hex)	00 to 0F
+2	Channel 0 Alarm 1 set code (2 digits Hex)	00 to 0C
+3	Channel 0 Alarm 2 set code (2 digits Hex)	00 to 0C
+4	Channel 1 Alarm 1 set code (2 digits Hex)	00 to 0C
+5	Channel 1 Alarm 2 set code (2 digits Hex)	00 to 0C
	• • •	
+16	Channel 7 Alarm 1 set code (2 digits Hex)	00 to 0C
+17	Channel 7 Alarm 2 set code (2 digits Hex)	00 to 0C

Receive Data Word Allocation (3rd Operand of PMCR)

None.

Write Alarm Temperature (Setting Unit 1) (Sequence No. 156)

Writes the alarm temperatures using a setting unit of 1 (4 digits)

Send Data Word Allocation (2nd Operand of PMCR)

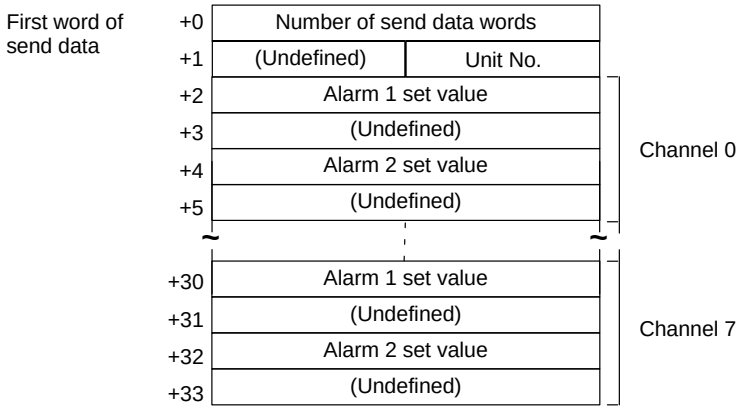

Offset	Contents (data format)	Data
+0	Number of send data words (4 digits BCD)	0034 (fixed)
+1	Unit No. (2 digits Hex)	00 to 0F
+2	Channel 0 Alarm 1 set value (4 digits BCD)	0000 to 9999
+3	Not used	
+4	Channel 0 Alarm 2 set value (4 digits BCD)	0000 to 9999
+5	Not used	
	• • •	
+32	Channel 7 Alarm 2 set value (4 digits BCD)	0000 to 9999
+33	Not used	

Receive Data Word Allocation (3rd Operand of PMCR)

None.

Write Alarm Temperature (Setting Unit 0.1) (Sequence No. 157)

Writes the alarm temperatures using a setting unit of 0.1 (5 digits)

Send Data Word Allocation (2nd Operand of PMCR)

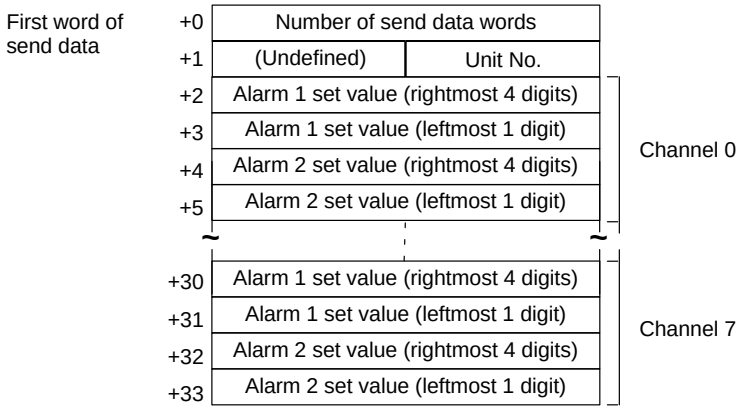

Offset	Contents (data format)	Data
+0	Number of send data words (4 digits BCD)	0034 (fixed)
+1	Unit No. (2 digits Hex)	00 to 0F
+2	Channel 0 Alarm 1 set value (rightmost 4 digits) (4 digits BCD)	0000 to 9999
+3	Channel 0 Alarm 1 set value (leftmost 1 digits) (4 digits BCD)	0000 to 0009
+4	Channel 0 Alarm 2 set value (rightmost 4 digits) (4 digits BCD)	0000 to 9999
+5	Channel 0 Alarm 2 set value (leftmost 1 digits) (4 digits BCD)	0000 to 0009
	• • •	
+32	Channel 7 Alarm 2 set value (rightmost 4 digits) (4 digits BCD)	0000 to 9999
+33	Channel 7 Alarm 2 set value (leftmost 1 digits) (4 digits BCD)	0000 to 0009

Receive Data Word Allocation (3rd Operand of PMCR)

None.

Write Hysteresis (Sequence No. 158)

Writes the hysteresis for control outputs for ON/OFF control.

Send Data Word Allocation (2nd Operand of PMCR)

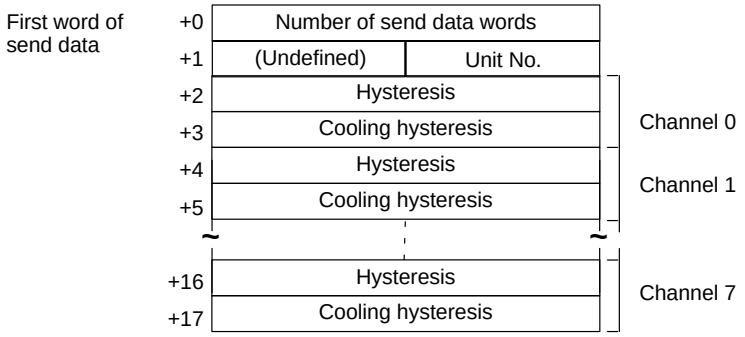

Offset	Contents (data format)	Data
+0	Number of send data words (4 digits BCD)	0018 (fixed)
+1	Unit No. (2 digits Hex)	00 to 0F
+2	Channel 0 Hysteresis (4 digits BCD)	0000 to 0999
+3	Channel 0 Cooling hysteresis (4 digits BCD)	0000 to 0999
+4	Channel 1 Hysteresis (4 digits BCD)	0000 to 0999
+5	Channel 1 Cooling hysteresis (4 digits BCD)	0000 to 0999
	• • •	
+16	Channel 7 Hysteresis (4 digits BCD)	0000 to 0999
+17	Channel 7 Cooling hysteresis (4 digits BCD)	0000 to 0999

Receive Data Word Allocation (3rd Operand of PMCR)

None.

Start Autotuning (Sequence No. 159)

Starts autotuning (AT).

Send Data Word Allocation (2nd Operand of PMCR)

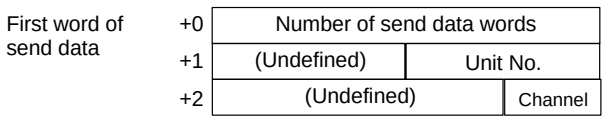

Offset	Contents (data format)	Data
+0	Number of send data words (4 digits BCD)	0003 (fixed)
+1	Unit No. (2 digits Hex)	00 to 0F
+2	Channel (Channel) No. (1 digit BCD)	0 to 7

Receive Data Word Allocation (3rd Operand of PMCR)

None.

Cancel Autotuning (Sequence No. 160)

Cancels Autotuning (AT) for all channels.

Send Data Word Allocation (2nd Operand of PMCR)

First word of send data	+0	Number of send data words	
	+1	(Undefined)	Unit No.

Offset	Contents (data format)	Data
+0	Number of send data words (4 digits BCD)	0002 (fixed)
+1	Unit No. (2 digits Hex)	00 to 0F

Receive Data Word Allocation (3rd Operand of PMCR)

None.

Write Setting Unit (Sequence No. 161)

Writes the setting unit.

Send Data Word Allocation (2nd Operand of PMCR)

First word of send data	+0	Number of send data words	
	+1	(Undefined)	Unit No.
	+2	Write code	

Offset	Contents (data format)	Data
+0	Number of send data words (4 digits BCD)	0003 (fixed)
+1	Unit No. (2 digits Hex)	00 to 0F
+2	Write code (4 digits BCD)	0000: unit of 1 0001: unit of 0.1

Receive Data Word Allocation (3rd Operand of PMCR)

None.

Write Input Shift Value (Sequence No. 162)

Writes the input shift values.

Send Data Word Allocation (2nd Operand of PMCR)

First word of send data	+0	Number of send data words		
	+1	(Undefined)	Unit No.	
	+2	Input shift value		Channel 0
	+3	Input shift value		Channel 1
	+4	Input shift value		Channel 2
	+5	Input shift value		Channel 3
	+6	Input shift value		Channel 4
	+7	Input shift value		Channel 5
	+8	Input shift value		Channel 6
	+9	Input shift value		Channel 7

Offset	Contents (data format)	Data
+0	Number of send data words (4 digits BCD)	0010 (fixed)
+1	Unit No. (2 digits Hex)	00 to 0F
+2	Channel 0 Input shift value (4 digits BCD)	0000 to 0999
+3	Channel 1 Input shift value (4 digits BCD)	0000 to 0999
+4	Channel 2 Input shift value (4 digits BCD)	0000 to 0999
	• • •	
+8	Channel 6 Input shift value (4 digits BCD)	0000 to 0999
+9	Channel 7 Input shift value (4 digits BCD)	0000 to 0999

Receive Data Word Allocation (3rd Operand of PMCR)

None.

Write Manual Reset Value (Sequence No. 163)

Writes the manual reset values.

Send Data Word Allocation (2nd Operand of PMCR)

First word of send data	+0	Number of send data words		
	+1	(Undefined)	Unit No.	
	+2	Manual reset value		Channel 0
	+3	Manual reset value		Channel 1
	+4	Manual reset value		Channel 2
	+5	Manual reset value		Channel 3
	+6	Manual reset value		Channel 4
	+7	Manual reset value		Channel 5
	+8	Manual reset value		Channel 6
	+9	Manual reset value		Channel 7

Offset	Contents (data format)	Data
+0	Number of send data words (4 digits BCD)	0010 (fixed)
+1	Unit No. (2 digits Hex)	00 to 0F
+2	Channel 0 Manual reset value (4 digits BCD)	0000 to 1000
+3	Channel 1 Manual reset value (4 digits BCD)	0000 to 1000
+4	Channel 2 Manual reset value (4 digits BCD)	0000 to 1000
	• • •	
+8	Channel 6 Manual reset value (4 digits BCD)	0000 to 1000
+9	Channel 7 Manual reset value (4 digits BCD)	0000 to 1000

Receive Data Word Allocation (3rd Operand of PMCR)

None.

Write Ramp Value (Sequence No. 164)

Writes the ramp values.

Send Data Word Allocation (2nd Operand of PMCR)

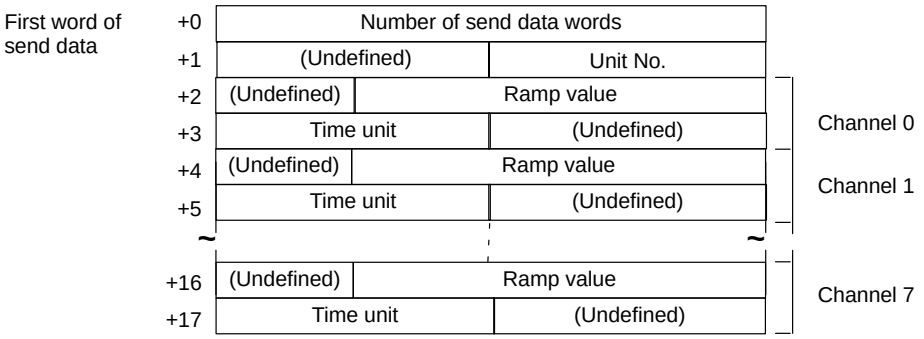

Offset	Contents (data format)	Data
+0	Number of send data words (4 digits BCD)	0018 (fixed)
+1	Unit No. (2 digits Hex)	00 to 0F
+2	Channel 0 Ramp value (3 digits BCD)	000 to 999
+3	Channel 0 Time unit (one ASCII character)	S: Seconds; M: Minutes; H: Hours
+4	Channel 1 Ramp value (3 digits BCD)	000 to 999
+5	Channel 1 Time unit (one ASCII character)	S: Second M: Minute H: Hour
	• • •	
+16	Channel 7 Ramp value (3 digits BCD)	000 to 999
+17	Channel 7 Time unit (one ASCII character)	S: Seconds; M: Minutes; H: Hours

Receive Data Word Allocation (3rd Operand of PMCR)

None.

Write Manual Output Value (Sequence No. 165)

Writes the manual output values for control output in manual operation.

Send Data Word Allocation (2nd Operand of PMCR)

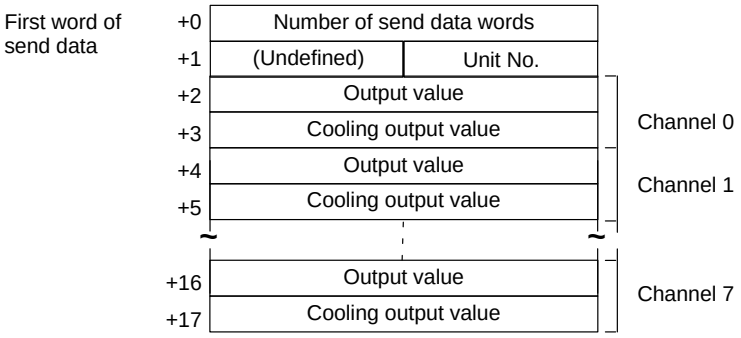

Offset	Contents (data format)	Data
+0	Number of send data words (4 digits BCD)	0018 (fixed)
+1	Unit No. (2 digits Hex)	00 to 0F
+2	Channel 0 Output value (4 digits BCD)	0000 to 1000
+3	Channel 0 Cooling output value (4 digits BCD)	0000 to 1000
+4	Channel 1 Output value (4 digits BCD)	0000 to 1000
+5	Channel 1 Cooling output value (4 digits BCD)	0000 to 1000
	• • •	
+16	Channel 7 Output value (4 digits BCD)	0000 to 1000
+17	Channel 7 Cooling output value (4 digits BCD)	0000 to 1000

Receive Data Word Allocation (3rd Operand of PMCR)

None.

Write Output Value Limit (Sequence No. 166)

Writes the output value limits that restrict the values of the control outputs.

Send Data Word Allocation (2nd Operand of PMCR)

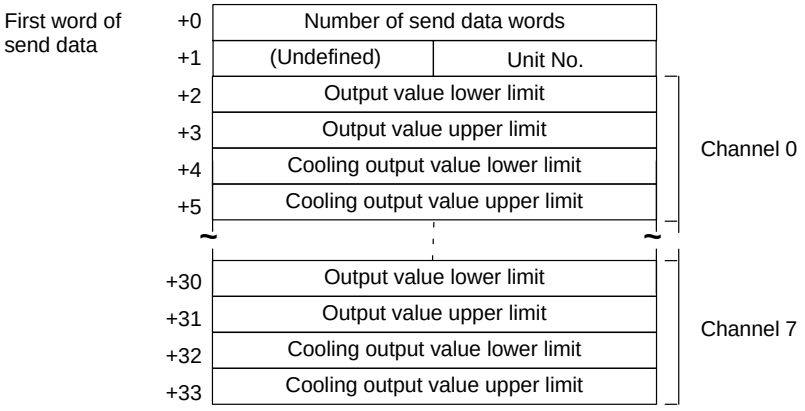

Offset	Contents (data format)	Data
+0	Number of send data words (4 digits BCD)	0034 (fixed)
+1	Unit No. (2 digits Hex)	00 to 0F
+2	Channel 0 Output value lower limit (4 digits BCD)	0000 to 1000
+3	Channel 0 Output value upper limit (4 digits BCD)	0000 to 1000
+4	Channel 0 Cooling output value lower limit (4 digits BCD)	0000 to 1000
+5	Channel 0 Cooling output value upper limit (4 digits BCD)	0000 to 1000
	• • •	
+32	Channel 7 Cooling output value lower limit (4 digits BCD)	0000 to 1000
+33	Channel 7 Cooling output value upper limit (4 digits BCD)	0000 to 1000

Receive Data Word Allocation (3rd Operand of PMCR)

None.

Write Output Value Change Rate Limit (Sequence No. 167)

Writes the output value change rate limits that restrict the rates of change in the control value output.

Send Data Word Allocation (2nd Operand of PMCR)

First word of send data	+0	Number of send data words		
	+1	(Undefined)	Unit No.	
	+2	Output change rate limit		Channel 0
	+3	Output change rate limit		Channel 1
	+4	Output change rate limit		Channel 2
	+5	Output change rate limit		Channel 3
	+6	Output change rate limit		Channel 4
	+7	Output change rate limit		Channel 5
	+8	Output change rate limit		Channel 6
	+9	Output change rate limit		Channel 7

Offset	Contents (data format)	Data
+0	Number of send data words (4 digits BCD)	0010 (fixed)
+1	Unit No. (2 digits Hex)	00 to 0F
+2	Channel 0 Output change rate limit (4 digits BCD)	0000 to 1000
+3	Channel 1 Output change rate limit (4 digits BCD)	0000 to 1000
+4	Channel 2 Output change rate limit (4 digits BCD)	0000 to 1000
	• • •	
+8	Channel 6 Output change rate limit (4 digits BCD)	0000 to 1000
+9	Channel 7 Output change rate limit (4 digits BCD)	0000 to 1000

Receive Data Word Allocation (3rd Operand of PMCR)

None.

Save Settings (Sequence No. 168)

Saves the settings.

Send Data Word Allocation (2nd Operand of PMCR)

First word of send data	+0	Number of send data words	
	+1	(Undefined)	Unit No.

Offset	Contents (data format)	Data
+0	Number of send data words (4 digits BCD)	0002 (fixed)
+1	Unit No. (2 digits Hex)	00 to 0F

Receive Data Word Allocation (3rd Operand of PMCR)

None.

Initialize Settings (Sequence No. 169)

Initializes all the settings to the factory defaults.

Send Data Word Allocation (2nd Operand of PMCR)

First word of send data	+0	Number of send data words	
	+1	(Undefined)	Unit No.

Offset	Contents (data format)	Data
+0	Number of send data words (4 digits BCD)	0002 (fixed)
+1	Unit No. (2 digits Hex)	00 to 0F

Receive Data Word Allocation (3rd Operand of PMCR)

None.

Write HB and HS Alarm Valid Channels (Sequence No. 170)

Writes the valid or invalid channels of HB alarm and HS alarm.

Send Data Word Allocation (2nd Operand of PMCR)

First word of send data			
+0	Number of send data words		
+1	(Undefined)	Unit No.	
+2	(Undefined)	Write code	

Offset	Contents (data format)	Data
+0	Number of send data words (4 digits BCD)	0003 (fixed)
+1	Unit No. (2 digits Hex)	00 to 0F
+2	Write code (2 digits Hex)	00 to FF

Receive Data Word Allocation (3rd Operand of PMCR)

None.

Write Heater Burnout and SSR Failure Detection Current (Sequence No. 171)

Writes the currents for detecting heater burnouts and SSR failures.

Send Data Word Allocation (2nd Operand of PMCR)

First word of send data			
+0	Number of send data words		
+1	(Undefined)	Unit No.	
+2	Heater burnout detection current		Channel 0
+3	SSR failure detection current		
+4	Heater burnout detection current		Channel 1
+5	SSR failure detection current		
~			
+16	Heater burnout detection current		Channel 7
+17	SSR failure detection current		

Offset	Contents (data format)	Data
+0	Number of send data words (4 digits BCD)	0018 (fixed)
+1	Unit No. (2 digits Hex)	00 to 0F
+2	Channel 0 Heater burnout detection current (4 digits BCD)	0000 to 0500
+3	Channel 0 SSR failure detection current (4 digits BCD)	0000 to 0500
+4	Channel 1 Heater burnout detection current (4 digits BCD)	0000 to 0500
+5	Channel 1 SSR failure detection current (4 digits BCD)	0000 to 0500
	• • •	
+16	Channel 7 Heater burnout detection current (4 digits BCD)	0000 to 0500
+17	Channel 7 SSR failure detection current (4 digits BCD)	0000 to 0500

Receive Data Word Allocation (3rd Operand of PMCR)

None.

Write Dead Band/Overlap Band (Sequence No. 172)

Writes the dead bands or overlap bands for control outputs during heating/cooling control.

Send Data Word Allocation (2nd Operand of PMCR)

First word of send data	+0	Number of send data words		
	+1	(Undefined)	Unit No.	
	+2	Dead band/overlap band		Channel 0
	+3	Dead band/overlap band		Channel 1
	+4	Dead band/overlap band		Channel 2
	+5	Dead band/overlap band		Channel 3
	+6	Dead band/overlap band		Channel 4
	+7	Dead band/overlap band		Channel 5
	+8	Dead band/overlap band		Channel 6
	+9	Dead band/overlap band		Channel 7

Offset	Contents (data format)	Data
+0	Number of send data words (4 digits BCD)	0010 (fixed)
+1	Unit No. (2 digits Hex)	00 to 0F
+2	Channel 0 Dead band/overlap band (4 digits BCD)	0000 to 0999
+3	Channel 1 Dead band/overlap band (4 digits BCD)	0000 to 0999
+4	Channel 2 Dead band/overlap band (4 digits BCD)	0000 to 0999
	• • •	
+8	Channel 6 Dead band/overlap band (4 digits BCD)	0000 to 0999
+9	Channel 7 Dead band/overlap band (4 digits BCD)	0000 to 0999

Receive Data Word Allocation (3rd Operand of PMCR)

None.

Write Cooling Coefficient (Sequence No. 173)

Writes the cooling coefficients for the cooling proportional bands for heating/cooling control.

Send Data Word Allocation (2nd Operand of PMCR)

First word of send data	+0	Number of send data words		
	+1	(Undefined)	Unit No.	
	+2	Cooling coefficient		Channel 0
	+3	Cooling coefficient		Channel 1
	+4	Cooling coefficient		Channel 2
	+5	Cooling coefficient		Channel 3
	+6	Cooling coefficient		Channel 4
	+7	Cooling coefficient		Channel 5
	+8	Cooling coefficient		Channel 6
	+9	Cooling coefficient		Channel 7

Offset	Contents (data format)	Data
+0	Number of send data words (4 digits BCD)	0010 (fixed)
+1	Unit No. (2 digits Hex)	00 to 0F
+2	Channel 0 Cooling coefficient (4 digits BCD)	0000 to 0100
+3	Channel 1 Cooling coefficient (4 digits BCD)	0000 to 0100
+4	Channel 2 Cooling coefficient (4 digits BCD)	0000 to 0100
	• • •	
+8	Channel 6 Cooling coefficient (4 digits BCD)	0000 to 0100
+9	Channel 7 Cooling coefficient (4 digits BCD)	0000 to 0100

Receive Data Word Allocation (3rd Operand of PMCR)

None.

Start Control (Sequence No. 174)

Starts temperature control for all channels in the specified Unit.

Send Data Word Allocation (2nd Operand of PMCR)

First word of send data	+0	Number of send data words	
	+1	(Undefined)	Unit No.

Offset	Contents (data format)	Data
+0	Number of send data words (4 digits BCD)	0002 (fixed)
+1	Unit No. (2 digits Hex)	00 to 0F

Receive Data Word Allocation (3rd Operand of PMCR)

None.

Stop Operation or Control (Sequence No. 175)

Stops temperature control or manual operation for all channels of the specified Unit.

Send Data Word Allocation (2nd Operand of PMCR)

First word of send data	+0	Number of send data words	
	+1	(Undefined)	Unit No.

Offset	Contents (data format)	Data
+0	Number of send data words (4 digits BCD)	0002 (fixed)
+1	Unit No. (2 digits Hex)	00 to 0F

Receive Data Word Allocation (3rd Operand of PMCR)

None.

Start Manual Operation (Sequence No. 176)

Starts manual operation based on the output values that were set for all channels of the specified Unit.

Send Data Word Allocation (2nd Operand of PMCR)

First word of send data	+0	Number of send data words	
	+1	(Undefined)	Unit No.

Offset	Contents (data format)	Data
+0	Number of send data words (4 digits BCD)	0002 (fixed)
+1	Unit No. (2 digits Hex)	00 to 0F

Receive Data Word Allocation (3rd Operand of PMCR)

None.

Appendix E
E5□J Temperature Controller Protocol

The E5□J Temperature Controller Protocol performs various settings and controls in remote mode for the Temperature Controller connected to the Communications Board via RS-232C or RS-422A/485 cable.

Note Negative values cannot be written. All values must be set as unsigned BCD.

Structure of the Protocol

The following table shows the structure of the E5□J Temperature Controller Protocol.

Sequence No.	Communications sequence name	Function	Ladder interface	
			Send word allocation	Receive word allocation
200	Select remote mode	Switches the Controller to remote mode.	Yes	No
201	Select local mode	Switches the Controller to local mode.	Yes	No
202	Select backup mode	Switches from set point write mode to back-up mode.	Yes	No
203	Select RAM write mode	Switches from set point write mode to RAM write mode.	Yes	No
204	Save set point	Saves the set point.	Yes	No
205	Write parameters 1	Writes the set point, alarm value 1, alarm value 2, and heater burnout alarm value.	Yes	No
206	Write parameters 2	Writes the proportional band, integral time, and derivative time.	Yes	No
207	Write input shift value	Writes the input shift value.	Yes	No
208	Read parameters 1	Reads the set point, alarm value 1, alarm value 2, and heater burnout alarm value.	Yes	Yes
209	Read parameters 2	Reads the proportional band, integral time, and derivative time.	Yes	Yes
210	Read input shift value	Reads the input shift value and writes it in IOM.	Yes	Yes
211	Read output value	Reads the output value and stores it in IOM.	Yes	Yes
212	Read process value	Reads the process value and stores it in IOM.	Yes	Yes
213	Read set point limit	Reads the set point limits and stores them in IOM.	Yes	Yes
214	Read heater current	Reads the heater current and stores it in IOM.	Yes	Yes
215	Read initial status	Reads the initial status and stores it in IOM.	Yes	Yes
216	General-purpose write	Writes the specified parameter by setting a header code.	Yes	No
217	General-purpose read	Reads the specified parameter by setting a header code.	Yes	Yes

Note Ladder Interface Settings

YES: User settings are required for the 2nd or 3rd operands of PMCR.

NO: Send word allocation: Set the constant 0000 for the 2nd operand (S).
Receive word allocation: Set a dummy word (e.g., DM0000) address for the 3rd operand (D).

Connections

The connections for using the E5□J Temperature Controller Protocol are shown below.

RS-232C Connections

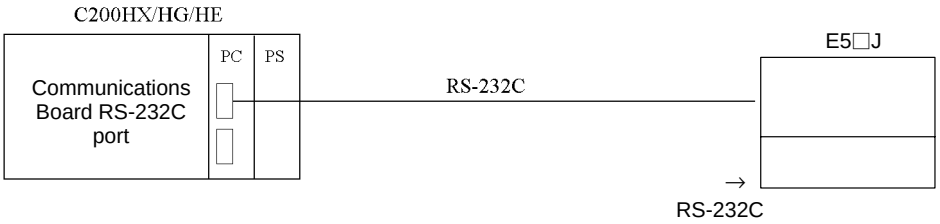

Signal name	Abbreviation	Signal direction	Pin No.
Signal ground or common return line	SG	–	25, 27
Send data	SD	Output	26
Receive data	RD	Input	28

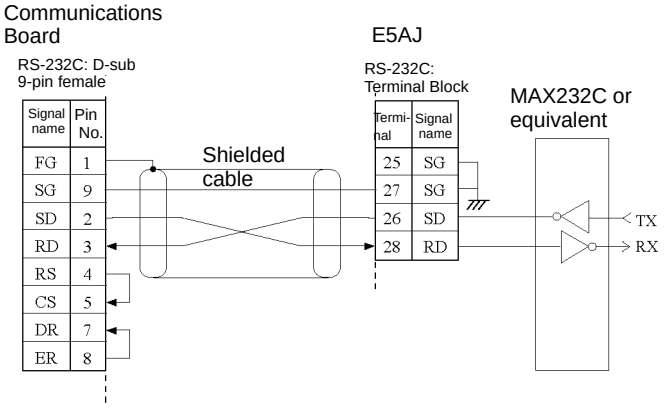

Note 1. The connection configuration is a one-to-one configuration and the maximum cable length is 15 m.
2. Use shielded twisted-pair cable (AWG28i or greater).

RS-422A/485 Connections

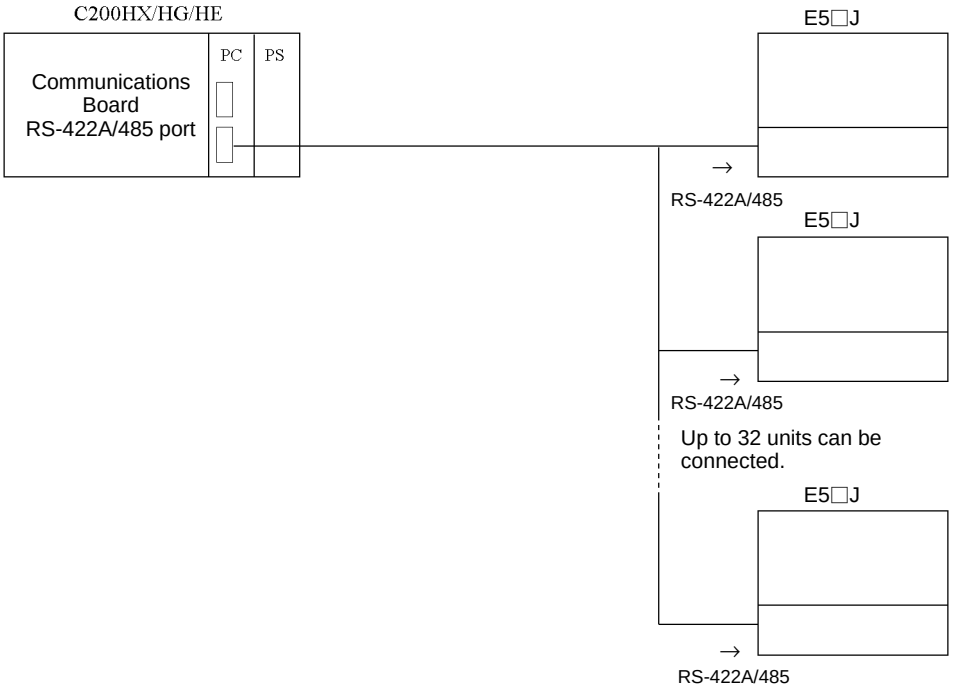

- **RS-422A**

Signal name	Abbreviation	Signal direction	Pin No.
Send data A	SDA	Output	26
Send data B	SDB	Output	25
Receive data A	RDA	Input	28
Receive data B	RDB	Input	29
Signal ground	SG	–	27

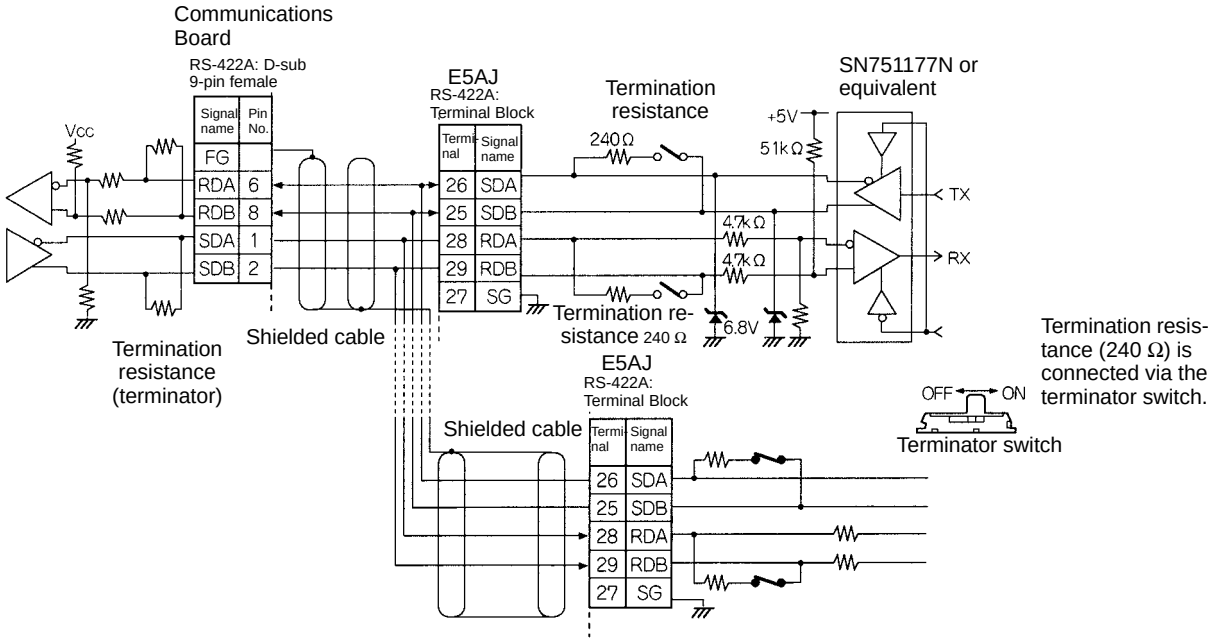

• **RS-485**

Signal name	Abbreviation	Signal direction	Pin No.
Terminal A	A	I/O	26, 28
Terminal B	B	I/O	25, 29
Signal ground	SG	–	27

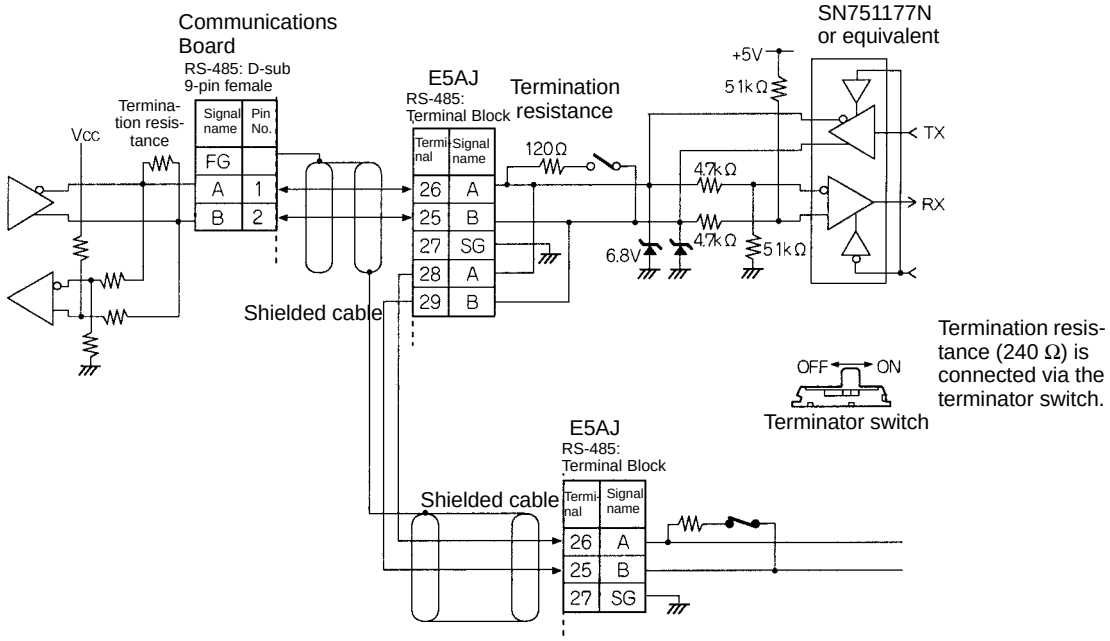

Note 1. The connection configuration is a one-to-one or a one-to-N configuration. Using a one-to-N configuration, up to 32 units can be connected including the Communications Board.

2. The maximum cable length is 500 m. Use shielded twisted-pair cable (AWG28i or greater).

3. Connect termination resistance to the devices only at both ends of the transmission path.

4. The total termination resistance at both ends must be at least 100 Ω for RS-422A or 54 Ω for RS-485.

Select Remote Mode (Sequence No. 200)

Switches the Controller to remote mode.

Send Data Word Allocation (2nd Operand of PMCR)

First word of send data	+0	Number of send data words	
	+1	(Undefined)	Unit No.

Offset	Contents (data format)	Data
+0	Number of send data words (4 digits BCD)	0002 (fixed)
+1	Unit No. (2 digits BCD)	00 to 31

Receive Data Word Allocation (3rd Operand of PMCR)

None.

Select Local Mode (Sequence No. 201)

Switches the Controller to local mode.

Send Data Word Allocation (2nd Operand of PMCR)

First word of send data	+0	Number of send data words	
	+1	(Undefined)	Unit No.

Offset	Contents (data format)	Data
+0	Number of send data words (4 digits BCD)	0002 (fixed)
+1	Unit No. (2 digits BCD)	00 to 31

Receive Data Word Allocation (3rd Operand of PMCR)

None.

Select Backup Mode (Sequence No. 202)

Switches from the set point write mode to backup mode.

Send Data Word Allocation (2nd Operand of PMCR)

First word of send data	+0	Number of send data words	
	+1	(Undefined)	Unit No.

Offset	Contents (data format)	Data
+0	Number of send data words (4 digits BCD)	0002 (fixed)
+1	Unit No. (2 digits BCD)	00 to 31

Receive Data Word Allocation (3rd Operand of PMCR)

None.

Select RAM Write Mode (Sequence No. 203)

Switches from set point write mode to RAM write mode.

Send Data Word Allocation (2nd Operand of PMCR)

First word of send data	+0	Number of send data words	
	+1	(Undefined)	Unit No.

Offset	Contents (data format)	Data
+0	Number of send data words (4 digits BCD)	0002 (fixed)
+1	Unit No. (2 digits BCD)	00 to 31

Receive Data Word Allocation (3rd Operand of PMCR)

None.

Save Set Point (Sequence No. 204)

Saves the set point.

Send Data Word Allocation (2nd Operand of PMCR)

First word of send data	+0	Number of send data words	
	+1	(Undefined)	Unit No.

Offset	Contents (data format)	Data
+0	Number of send data words (4 digits BCD)	0002 (fixed)
+1	Unit No. (2 digits BCD)	00 to 31

Receive Data Word Allocation (3rd Operand of PMCR)

None.

Write Parameters 1 (Sequence No. 205)

Writes the set point, alarm value 1, alarm value 2, and a heater burnout alarm value to multiple units.

Send Data Word Allocation (2nd Operand of PMCR)

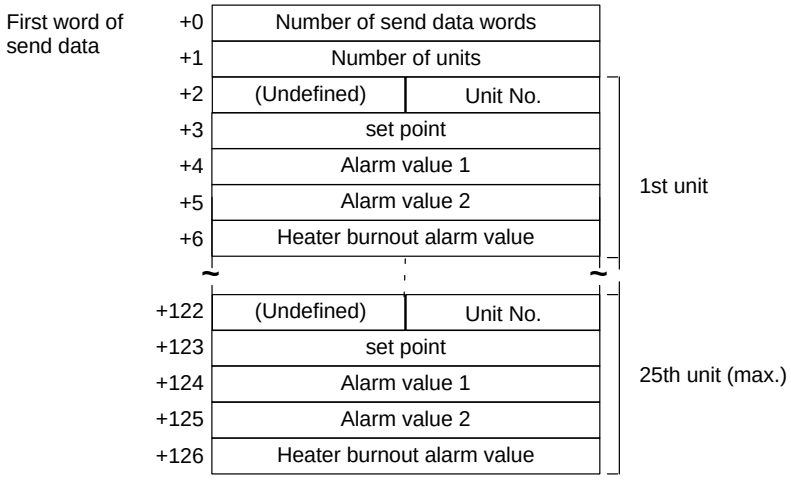

Offset	Contents (data format)	Data
+0	Number of send data words (4 digits BCD)	Number of units × 5 + 2
+1	Number of units (4 digits BCD)	0001 to 0025
+2	1st unit Unit No. (2 digits BCD)	00 to 31
+3	1st unit set point (4 digits BCD)	0000 to 9999
+4	1st unit Alarm value 1 (4 digits BCD)	0000 to 9999
+5	1st unit Alarm value 2 (4 digits BCD)	0000 to 9999
+6	1st unit Heater burnout alarm value 2 (4 digits BCD)	0000 to 9999
+7	2nd unit Unit No. (2 digits BCD)	00 to 31
	• • •	
+126 (max.)	25th unit Heater burnout alarm value 2 (4 digits BCD)	0000 to 9999

Receive Data Word Allocation (3rd Operand of PMCR)

None.

Write Parameters 2 (Sequence No. 206)

Writes the proportional bands, integral times, and derivative times to multiple units.

Send Data Word Allocation (2nd Operand of PMCR)

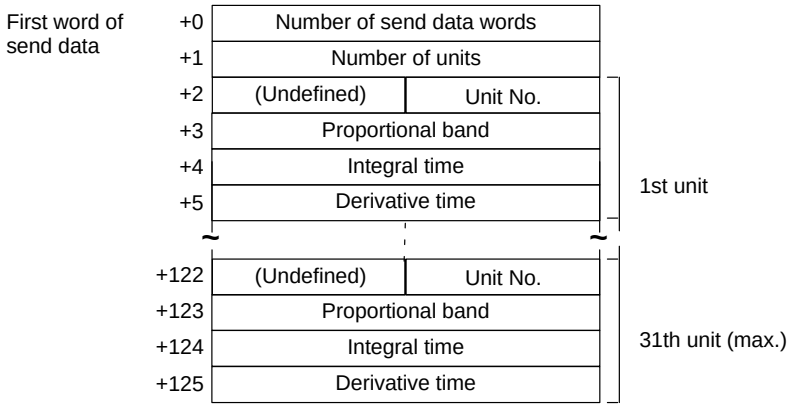

Offset	Contents (data format)	Data
+0	Number of send data words (4 digits BCD)	Number of units × 4 + 2
+1	Number of units (4 digits BCD)	0001 to 0031
+2	1st unit Unit No. (2 digits BCD)	00 to 31
+3	1st unit Proportional band (4 digits BCD)	0000 to 9999
+4	1st unit Integral time (4 digits BCD)	0000 to 9999
+5	1st unit Derivative time (4 digits BCD)	0000 to 9999
+6	2nd unit Unit No. (2 digits BCD)	00 to 31
	• • •	
+125 (max.)	31th unit Derivative time (4 digits BCD)	0000 to 9999

Receive Data Word Allocation (3rd Operand of PMCR)

None.

Write Input Shift Value (Sequence No. 207)

Writes the input shift value.

Send Data Word Allocation (2nd Operand of PMCR)

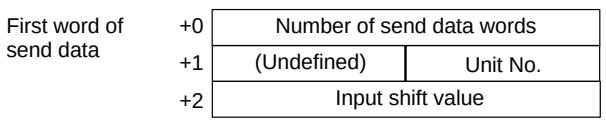

Offset	Contents (data format)	Data
+0	Number of send data words (4 digits BCD)	0003 (fixed)
+1	Unit No. (2 digits BCD)	00 to 31
+2	Input shift value (4 digits BCD)	0000 to 9999

Receive Data Word Allocation (3rd Operand of PMCR)

None

Read Parameters 1 (Sequence No. 208)

Reads the set points, alarm values 1, alarm values 2, and heater burnout alarm values for multiple units and stores the results in the specified words.

Send Data Word Allocation (2nd Operand of PMCR)

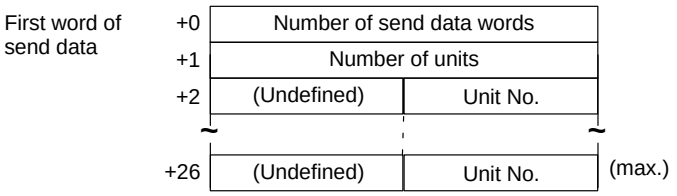

Offset	Contents (data format)	Data
+0	Number of send data words (4 digits BCD)	Number of units + 2
+1	Number of units (4 digits BCD)	0001 to 0025
+2	1st unit Unit No. (2 digits BCD)	00 to 31
+3	2nd unit Unit No. (2 digits BCD)	00 to 31
	• • •	
+26 (max.)	25th unit Unit No. (2 digits BCD)	00 to 31

Receive Data Word Allocation (3rd Operand of PMCR)

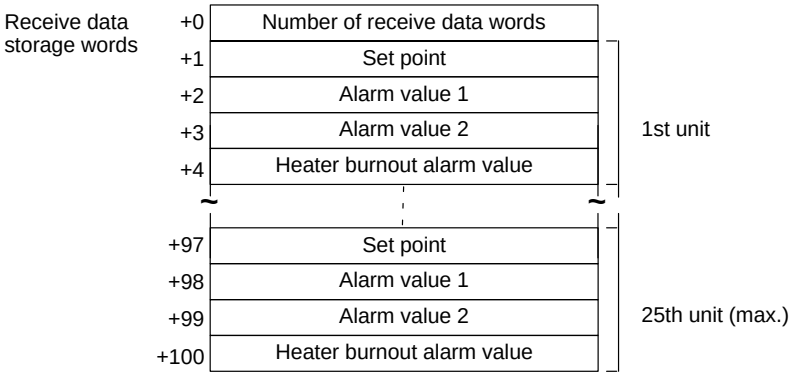

Offset	Contents (data format)	Data
+0	Number of receive data words (4 digits BCD)	Number of units × 4 + 1
+1	1st unit Set point (4 digits BCD)	0000 to 9999 When the left digit is –1, A is set and when it is –, F is set.
+2	1st unit Alarm value 1 (4 digits BCD)	0000 to 9999 When the left digit is –1, A is set and when it is –, F is set.
+3	1st unit Alarm value 2 (4 digits BCD)	0000 to 9999 When the left digit is –1, A is set and when it is –, F is set.
+4	1st unit Heater burnout alarm value (4 digits BCD)	0000 to 9999 When the left digit is –1, A is set and when it is –, F is set.
+5	2nd unit Set point (4 digits BCD)	0000 to 9999 When the left digit is –1, A is set and when it is –, F is set.
	• • •	
+100 (max.)	25th unit Heater burnout alarm value (4 digits BCD)	0000 to 9999 When the left digit is –1, A is set and when it is –, F is set.

Read Parameters 2 (Sequence No. 209)

Reads the proportional bands, integral times, and derivative times for multiple units and stores the results in the specified words.

Send Data Word Allocation (2nd Operand of PMCR)

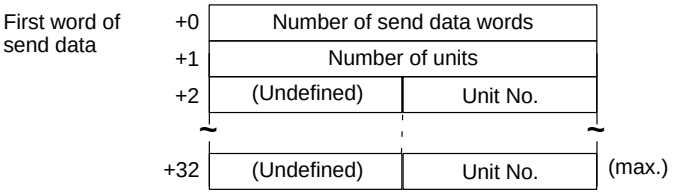

Offset	Contents (data format)	Data
+0	Number of send data words (4 digits BCD)	Number of units+ 2
+1	Number of units (4 digits BCD)	0001 to 0031
+2	1st unit Unit No. (2 digits BCD)	00 to 31
+3	2nd unit Unit No. (2 digits BCD)	00 to 31
	• • •	
+32 (max.)	31th unit Unit No. (2 digits BCD)	00 to 31

Receive Data Word Allocation (3rd Operand of PMCR)

Receive data storage words			
	+0	Number of receive data words	
	+1	Proportional band	1st unit
	+2	Integral time	
	+3	Derivative time	
	~	~	
	+91	Proportional band	
	+92	Integral time	31th unit (max.)
	+93	Derivative time	

Offset	Contents (data format)	Data
+0	Number of receive data words (4 digits BCD)	Number of units × 3 + 1
+1	1st unit Proportional band (4 digits BCD)	0000 to 9999 When the left digit is –1, A is set and when it is –, F is set.
+2	1st unit Integral time (4 digits BCD)	0000 to 9999 When the left digit is –1, A is set and when it is –, F is set.
+3	1st unit Derivative time (4 digits BCD)	0000 to 9999 When the left digit is –1, A is set and when it is –, F is set.
+4	2nd unit Proportional band (4 digits BCD)	0000 to 9999 When the left digit is –1, A is set and when it is –, F is set.
	• • •	
+93 (max.)	31th unit Derivative time (4 digits BCD)	0000 to 9999 When the left digit is –1, A is set and when it is –, F is set.

Read Input Shift Value (Sequence No. 210)

Reads the input shift value and stores the results in the specified words.

Send Data Word Allocation (2nd Operand of PMCR)

First word of send data			
	+0	Number of send data words	
	+1	(Undefined)	Unit No.

Offset	Contents (data format)	Data
+0	Number of send data words (4 digits BCD)	0002 (fixed)
+1	Unit No. (2 digits BCD)	00 to 31

Receive Data Word Allocation (3rd Operand of PMCR)

Receive data storage words		
	+0	Number of receive data words
	+1	Input shift value

Offset	Contents (data format)	Data
+0	Number of receive data words (4 digits BCD)	0002
+1	Input shift value (4 digits BCD)	0000 to 9999 When the left digit is –1, A is set and when it is –, F is set.

Read Output Value (Sequence No. 211)

Reads the output value and stores the results in the specified word.

Send Data Word Allocation (2nd Operand of PMCR)

First word of send data	+0	Number of send data words	
	+1	(Undefined)	Unit No.

Offset	Contents (data format)	Data
+0	Number of send data words (4 digits BCD)	0002 (fixed)
+1	Unit No. (2 digits BCD)	00 to 31

Receive Data Word Allocation (3rd Operand of PMCR)

Receive data storage words	+0	Number of receive data words
	+1	Output value

Offset	Contents (data format)	Data
+0	Number of receive data words (4 digits BCD)	0002
+1	Output value (4 digits BCD)	0000 to 9999 When the left digit is –1, A is set and when it is –, F is set.

Read Process Value (Sequence No. 212)

Reads the process value and status data and stores the results in the specified word.

Send Data Word Allocation (2nd Operand of PMCR)

First word of send data	+0	Number of send data words	
	+1	(Undefined)	Unit No.

Offset	Contents (data format)	Data
+0	Number of send data words (4 digits BCD)	0002 (fixed)
+1	Unit No. (2 digits BCD)	00 to 31

Receive Data Word Allocation (3rd Operand of PMCR)

Receive data storage words	+0	Number of receive data words
	+1	Process value
	+2	Status data

Offset	Contents (data format)	Data
+0	Number of receive data words (4 digits BCD)	0003
+1	Process value (4 digits BCD)	0000 to 9999 When the left digit is –1, A is set and when it is –, F is set.
+2	Status data (4 digits Hex)	0000 to 9999

Read Set Point Limit (Sequence No. 213)

Reads the set point limits and stores the results in the specified word.

Send Data Word Allocation (2nd Operand of PMCR)

First word of send data	+0	Number of send data words	
	+1	(Undefined)	Unit No.

Offset	Contents (data format)	Data
+0	Number of send data words (4 digits BCD)	0002 (fixed)
+1	Unit No. (2 digits BCD)	00 to 31

Receive Data Word Allocation (3rd Operand of PMCR)

Receive data storage words

+0	Number of receive data words
+1	Set point lower limit
+2	Set point upper limit

Offset	Contents (data format)	Data
+0	Number of receive data words (4 digits BCD)	0003
+1	Set point lower limit (4 digits BCD)	0000 to 9999 When the left digit is –1, A is set and when it is –, F is set.
+2	Set point upper limit (4 digits BCD)	0000 to 9999 When the left digit is –1, A is set and when it is –, F is set.

Read Heater Current (Sequence No. 214)

Reads the heater current and stores the results in the specified word.

Send Data Word Allocation (2nd Operand of PMCR)

First word of send data

+0	Number of send data words	
+1	(Undefined)	Unit No.

Offset	Contents (data format)	Data
+0	Number of send data words (4 digits BCD)	0002 (fixed)
+1	Unit No. (2 digits BCD)	00 to 31

Receive Data Word Allocation (3rd Operand of PMCR)

Receive data storage words

+0	Number of receive data words
+1	Heater current
+2	Status data

Offset	Contents (data format)	Data
+0	Number of receive data words (4 digits BCD)	0003
+1	Heater current (4 digits BCD)	0000 to 9999 When the left digit is –1, A is set and when it is –, F is set.
+2	Status data (4 digits Hex)	0000 to 0011

Read Initial Status (Sequence No. 215)

Reads the initial status and stores the results in the specified word.

Send Data Word Allocation (2nd Operand of PMCR)

First word of send data

+0	Number of send data words	
+1	(Undefined)	Unit No.

Offset	Contents (data format)	Data
+0	Number of send data words (4 digits BCD)	0002 (fixed)
+1	Unit No. (2 digits BCD)	00 to 31

Receive Data Word Allocation (3rd Operand of PMCR)

Receive data storage words	+0	Number of receive data words			
	+1	(Undefined)		Status	
	+2	(Undefined)	Alarm 1 type	Alarm 2 type	Input type

Offset	Contents (data format)	Data
+0	Number of receive data words (4 digits BCD)	0003
+1	Status (2 digits Hex)	00 to 99
+2	Alarm 1 type (1 digit Hex) Alarm 2 type (1 digit Hex) Input type (1 digit BCD)	0 to 9 0 to 9 0 to 9

General-purpose Write (Sequence No. 216)

Writes the parameter specified by setting a header code.

Send Data Word Allocation (2nd Operand of PMCR)

First word of send data	+0	Number of send data words	
	+1	(Undefined)	Unit No.
	+2	Header code (ASC)	
	+3	(Undefined)	Data code
	+4	Send data	

Offset	Contents (data format)	Data
+0	Number of send data words (4 digits BCD)	0005 (fixed)
+1	Unit No. (2 digits BCD)	00 to 31
+2	Header code (two ASCII characters)	Header codes that can be set MB, WS, W%, WW, WB, WN, WV
+3	Data code (2 digits BCD)	01 to 02
+4	Write data (4 digits BCD)	0000 to 9999

Receive Data Word Allocation (3rd Operand of PMCR)

None.

General-purpose Read (Sequence No. 217)

Reads the parameter specified by setting a header

Send Data Word Allocation (2nd Operand of PMCR)

First word of send data	+0	Number of send data words	
	+1	(Undefined)	Unit No.
	+2	Header code (ASC)	
	+3	(Undefined)	Data code

Offset	Contents (data format)	Data
+0	Number of send data words (4 digits BCD)	0004 (fixed)
+1	Unit No. (2 digits BCD)	00 to 31
+2	Header code (two ASCII characters)	Header codes that can be set RS, R%, RW, RB, RN, RV, RO
+3	Data code (2 digits BCD)	01 to 02

Receive Data Word Allocation (3rd Operand of PMCR)

Receive data storage words	+0	Number of receive data words
	+1	Receive data

Offset	Contents (data format)	Data
+0	Number of receive data words (4 digits BCD)	0002
+1	Read data (4 digits BCD)	0000 to 9999 When the left digit is –1, A is set and when it is –, F is set.

Note The completion code is not included in the read data.

Appendix F
ES100□ Digital Controller Protocol

The ES100□ Digital Controller Protocol controls in remote mode and reads various settings from the Controller connected to the Communications Board via RS-232C or RS-422A/485 cable.

Note Negative values cannot be written. All values must be set as unsigned BCD.

Structure of the Protocol

The structure of the ES100□ Digital Controller Protocol is shown below.

Sequence No.	Transmission sequence name	Function	Ladder interface	
			Send word allocation	Receive word allocation
250	Read event data	Reads events 1 to 10 in the variable area.	Yes	Yes
251	Read time signals	Reads time signals 1 to 10 in the variable area.	Yes	Yes
252	Read error detection data	Reads error groups 1 to 15 in the variable area.	Yes	Yes
253	Read heater burnout data	Reads the heater burnout alarm.	Yes	Yes
254	Read PV data	Reads PV data in the variable area.	Yes	Yes
255	Read SP data	Reads SP data in the variable area.	Yes	Yes
256	Read MV	Reads the MV in the variable area.	Yes	Yes
257	Read control monitor data	Reads control monitor data (SP, PV, and MV) in the variable area.	Yes	Yes
258	Read adjustment parameters	Reads adjustment parameters in the parameter area.	Yes	Yes
259	Write adjustment parameters	Writes adjustment parameters in the parameter area.	Yes	No
260	Read PID control parameters 1	Reads PID parameters No. 1 to 4 from the PID control parameters in the parameter area.	Yes	Yes
261	Read PID control parameters 2	Reads PID parameters No. 5 to 8 from the PID control parameters in the parameter area.	Yes	Yes
262	Write PID control parameters 1	Writes PID parameters No. 1 to 4 from PID control parameters in the parameter area.	Yes	No
263	Write PID control parameters 2	Writes PID parameters No. 5 to 8 from PID control parameters in the parameter area.	Yes	No
264	Read local SP	Reads the local SP in the program parameter area.	Yes	Yes
265	Write local SP	Writes local SP in the program parameter area.	Yes	No
266	Read program parameters	Reads local SP, step time, PID No. wait code, and events 1 to 10 set values in the program parameter area.	Yes	Yes
267	Write program parameters	Writes the local SP, step time, PID No., wait code, and event 1 to 10 set values in the program parameter area.	Yes	No
268	Remote setting mode	Switches the setting mode to remote setting.	Yes	No
269	Local setting mode	Switches the setting mode to local setting.	Yes	No
270	External setting mode	Switches the setting mode to external setting.	Yes	No
271	Run command	Starts control.	Yes	No
272	Reset (stop)	Stops control.	Yes	No

Sequence No.	Transmission sequence name	Function	Ladder interface	
			Send word allocation	Receive word allocation
273	Auto mode	Switches the control mode to auto.	Yes	No
274	Manual mode	Switches the control mode to a manual.	Yes	No
275	Execute A.T.	Executes A.T.	Yes	No
276	Cancel A.T.	Cancels A.T.	Yes	No
277	Change pattern No.	Changes the pattern No.	Yes	No
278	Change bank No.	Changes the bank No.	Yes	No
279	Read controller status	Reads the controller status.	Yes	Yes
280	General-purpose command	Sends specified data and stores the received data in the specified words.	Yes	Yes

Note Ladder Interface Settings

YES: User settings are required for the 2nd and 3rd operands of PMCR.

NO: Send word allocation: Set a dummy word address for the 3rd operand (D).
Receive word allocation: Set the constant 0000 for the 2rd operand (S).

Connections

Connections for using the ES100□ Digital Controller Protocol are shown below.

RS-232C Connections

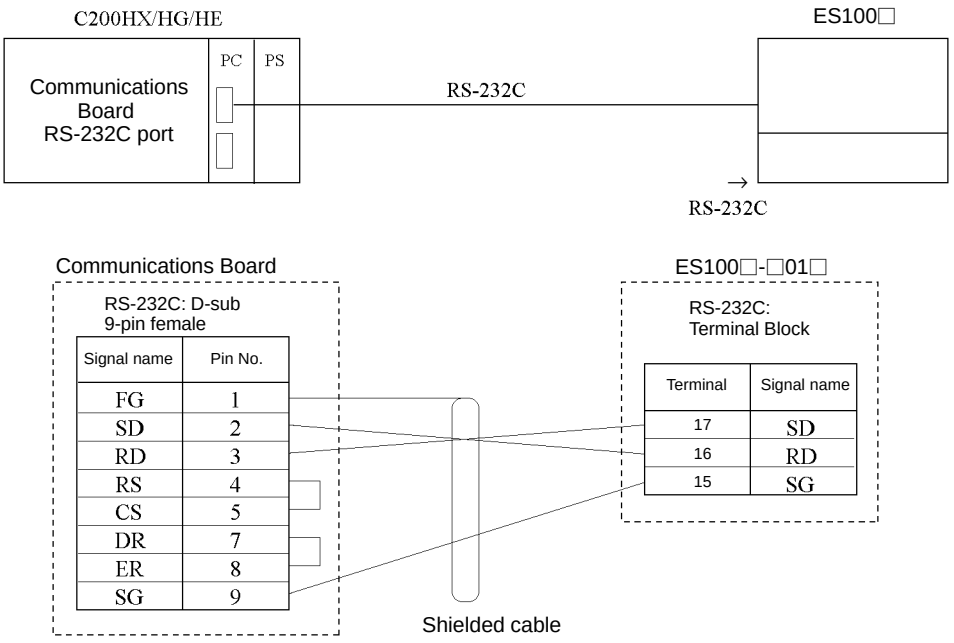

RS-422A/485 Connections

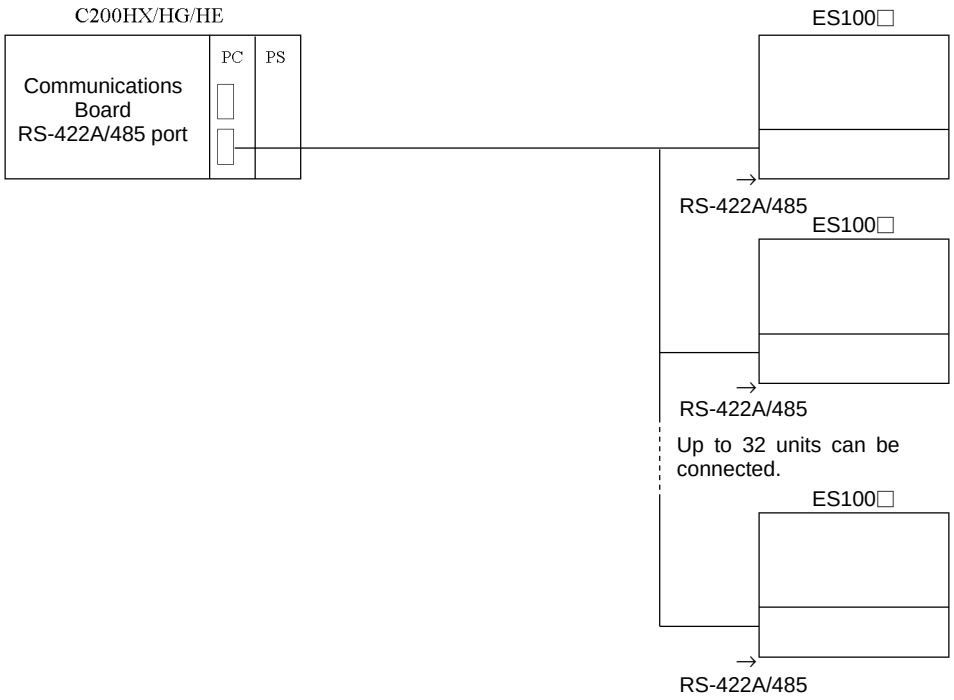

- **RS-422A**

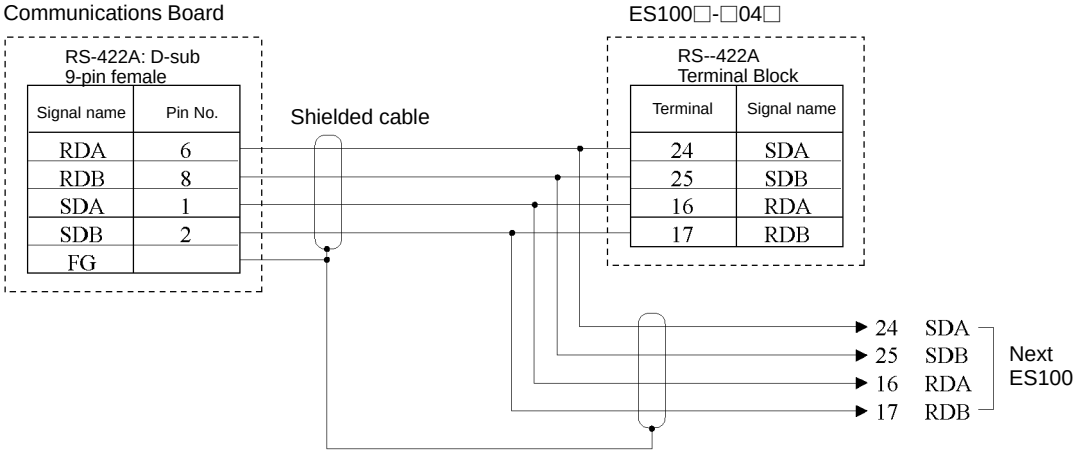

- **RS-485**

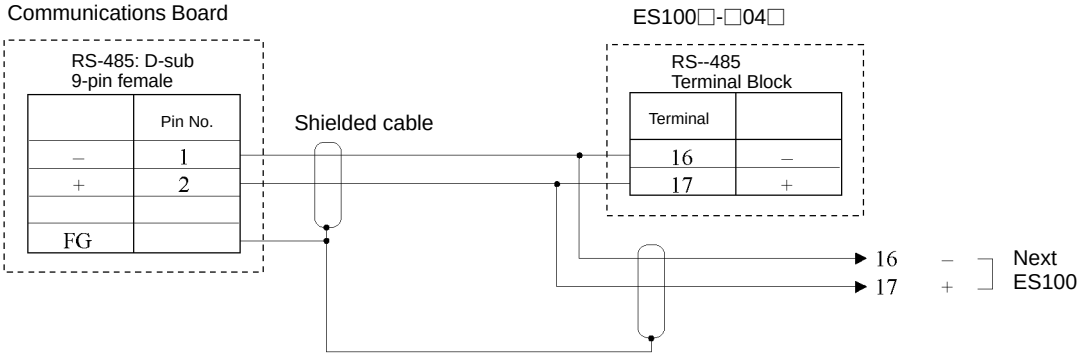

Switch Settings

There are two switches located on the board on the left of the Unit. Set SW1 to the interface: RS-422A or RS-485. Set SW2 to the center on all terminating Units and to the same setting as SW1 on all other Units.

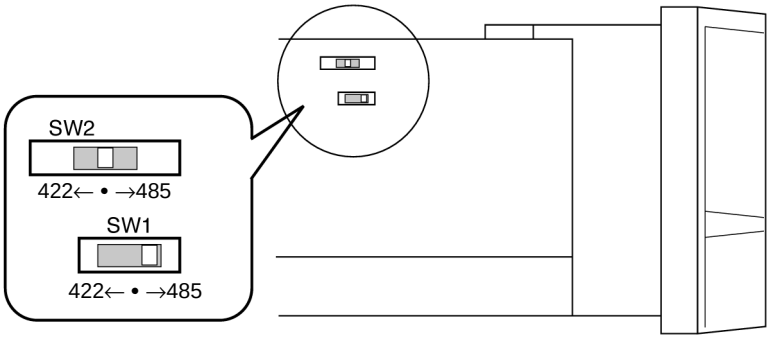

Read Event Data (Sequence No. 250)

Reads events 1 to 10 in the variable area.

Send Data Word Allocation (2nd Operand of PMCR)

First word of send data	+0	Number of send data words		
	+1	Number of units		
	+2	(Undefined)	Unit No.	1st unit
	+3	(Undefined)	Unit No.	2nd unit
	~		~	
	+26	(Undefined)	Unit No.	25th unit (max.)

Offset	Contents (data format)	Data
+0	Number of send data words (4 digits BCD)	Number of units + 2
+1	Number of units (4 digits BCD)	0001 to 0025
+2	1st unit Unit No. (2 digits BCD)	00 to 31
+3	2nd unit Unit No. (2 digits BCD)	00 to 31
	• • •	
+26 (max.)	25th unit Unit No. (2 digits BCD)	00 to 31

Receive Data Word Allocation (3rd Operand of PMCR)

Receive data storage words	+0	Number of receive data words		
	+1	Event 1	Event 2	1st unit
	+2	Event 3	Event 4	
	+3	Event 5	Event 6	
	+4	Event 7	Event 8	
	+5	Event 9	Event 10	
	~		~	
	+121	Event 1	Event 2	25th unit (max.)
	+122	Event 3	Event 4	
	+123	Event 5	Event 6	
	+124	Event 7	Event 8	
	+125	Event 9	Event 10	

Offset	Contents (data format)	Data
+0	Number of receive data words (4 digits BCD)	Number of units x 5 + 1
+1	1st unit Event data 1 (2 digits Hex) Event data 2 (2 digits Hex)	00 to FF 00 to FF
+2	1st unit Event data 3 (2 digits Hex) Event data 4 (2 digits Hex)	00 to FF 00 to FF
+3	1st unit Event data 5 (2 digits Hex) Event data 6 (2 digits Hex)	00 to FF 00 to FF
+4	1st unit Event data 7 (2 digits Hex) Event data 8 (2 digits Hex)	00 to FF 00 to FF
+5	1st unit Event data 9 (2 digits Hex) Event data 10 (2 digits Hex)	00 to FF 00 to FF
	• • •	
+125 (max.)	25th unit Event data 9 (2 digits Hex) Event data 10 (2 digits Hex)	00 to FF 00 to FF

Read Time Signal (Sequence No. 251)

Reads time signals from 1 to 10 in the variable area.

Send Data Word Allocation (2nd Operand of PMCR)

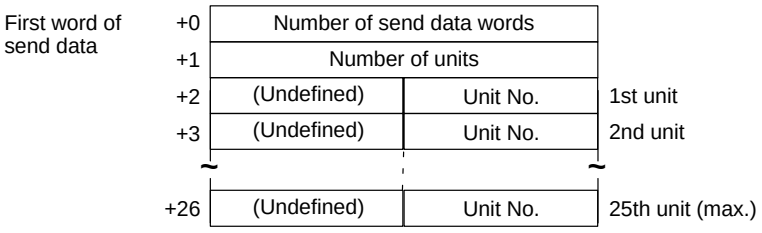

Offset	Contents (data format)	Data
+0	Number of send data words (4 digits BCD)	Number of units + 2
+1	Number of units (4 digits BCD)	0001 to 0025
+2	1st unit Unit No. (2 digits BCD)	00 to 31
+3	2nd unit Unit No. (2 digits BCD)	00 to 31
	• • •	
+26 (max.)	25th unit Unit No. (2 digits BCD)	00 to 31

Receive Data Word Allocation (3rd Operand of PMCR)

Receive data storage words				
	+0	Number of receive data words		
	+1	Time signal 1	Time signal 2	1st unit
	+2	Time signal 3	Time signal 4	
	+3	Time signal 5	Time signal 6	
	+4	Time signal 7	Time signal 8	
	+5	Time signal 9	Time signal 10	
	~		~	
	+121	Time signal 1	Time signal 2	25th unit (max.)
	+122	Time signal 3	Time signal 4	
	+123	Time signal 5	Time signal 6	
	+124	Time signal 7	Time signal 8	
	+125	Time signal 9	Time signal 10	

Offset	Contents (data format)	Data
+0	Number of receive data words (4digits BCD)	Number of units × 5 + 1
+1	1st unit Time signal 1 data (2 digits Hex) Time signal 2 data (2 digits Hex)	00 to FF 00 to FF
+2	1st unit Time signal 3 data (2 digits Hex) Time signal 4 data (2 digits Hex)	00 to FF 00 to FF
+3	1st unit Time signal 5 data (2 digits Hex) Time signal 6 data (2 digits Hex)	00 to FF 00 to FF
+4	1st unit Time signal 7 data (2 digits Hex) Time signal 8 data (2 digits Hex)	00 to FF 00 to FF
+5	1st unit Time signal 9 data (2 digits Hex) Time signal 10 data (2 digits Hex)	00 to FF 00 to FF
	• • •	
+125 (max.)	25th unit Time signal 9 data (2 digits Hex) Time signal 10 data (2 digits Hex)	00 to FF 00 to FF

Read Error Detection Data (Sequence No. 252)

Reads error groups from 0 to 15 in the variable area.

Send Data Word Allocation (2nd Operand of PMCR)

First word of send data				
	+0	Number of send data words		
	+1	Number of units		
	+2	(Undefined)	Unit No.	1st unit
	+3	(Undefined)	Unit No.	2nd unit
	~		~	
	+17	(Undefined)	Unit No.	16th unit (max.)

Offset	Contents (data format)	Data
+0	Number of send data words (4 digits BCD)	Number of units + 2
+1	Number of units (4 digits BCD)	0001 to 0008
+2	1st unit Unit No. (2 digits BCD)	00 to 31
+3	2nd unit Unit No. (2 digits BCD)	00 to 31
	• • •	
+17 (max.)	16th unit Unit No. (2 digits BCD)	00 to 31

Receive Data Word Allocation (3rd Operand of PMCR)

Receive data storage words

+0	Number of receive data words		
+1	Error group 0	Error group 1	1st unit
+2	Error group 2	Error group 3	
+3	Error group 4	Error group 5	
+4	Error group 6	Error group 7	
+5	Error group 8	Error group 9	
+6	Error group 10	Error group 11	
+7	Error group 12	Error group 13	
+8	Error group 14	Error group 15	
~		~	
+128	Error group 14	Error group 15	16th unit (max.)

Offset	Contents (data format)	Data
+0	Number of receive data words (4 digits BCD)	Number of units × 8 + 1
+1	1st unit Error group 0 data (2 digits Hex) Error group 1 data (2 digits Hex)	00 to FF 00 to FF
+2	1st unit Error group 2 data (2 digits Hex) Error group 3 data (2 digits Hex)	00 to FF 00 to FF
	• •	
+7	1st unit Error group 12 data (2 digits Hex) Error group 13 data (2 digits Hex)	00 to FF 00 to FF
+8	1st unit Error group 14 data (2 digits Hex) Error group 15 data (2 digits Hex)	00 to FF 00 to FF
+9	2nd unit Error group 0 data (2 digits Hex) Error group 1 data (2 digits Hex)	00 to FF 00 to FF
	• •	
+128 (max.)	16th unit Error group 14 data (2 digits Hex) Error group 15 data (2 digits Hex)	00 to FF 00 to FF

Read Heater Burnout Data (Sequence No. 253)

Reads the heater burnout alarm in the variable area.

Send Data Word Allocation (2nd Operand of PMCR)

First word of send data				
	+0	Number of send data words		
	+1	Number of units		
	+2	(Undefined)	Unit No.	1st unit
	+3	(Undefined)	Unit No.	2nd unit
	~			~
	+33	(Undefined)	Unit No.	32nd unit (max.)

Offset	Contents (data format)	Data
+0	Number of send data words (4 digits BCD)	Number of units + 2
+1	Number of units (4 digits BCD)	0001 to 0032
+2	1st unit Unit No. (2 digits BCD)	00 to 31
+3	2nd unit Unit No. (2 digits BCD)	00 to 31
	• • •	
+33 (max.)	32nd unit Unit No. (2 digits BCD)	00 to 31

Receive Data Word Allocation (3rd Operand of PMCR)

Receive data storage words				
	+0	Number of receive data words		
	+1	(Undefined)	Heater burnout alarm	1st unit
	+2	(Undefined)	Heater burnout alarm	2nd unit
	+3	(Undefined)	Heater burnout alarm	3rd unit
	+4	(Undefined)	Heater burnout alarm	4th unit
	~			~
	+32	(Undefined)	Heater burnout alarm	32nd unit (max.)

Offset	Contents (data format)	Data
+0	Number of receive data words (4 digits BCD)	Number of units +1
+1	1st unit Heater burnout alarm (2 digits Hex)	00 to FF
+2	2nd unit Heater burnout alarm (2 digits Hex)	00 to FF
+3	3rd unit Heater burnout alarm (2 digits Hex)	00 to FF
+4	4th unit Heater burnout alarm (2 digits Hex)	00 to FF
	• • •	
+32 (max.)	32nd unit Heater burnout alarm (2 digits Hex)	00 to FF

Read PV Data (Sequence No. 254)

Reads the PV data for the variable type “analog data” in the variable area.

Send Data Word Allocation (2nd Operand of PMCR)

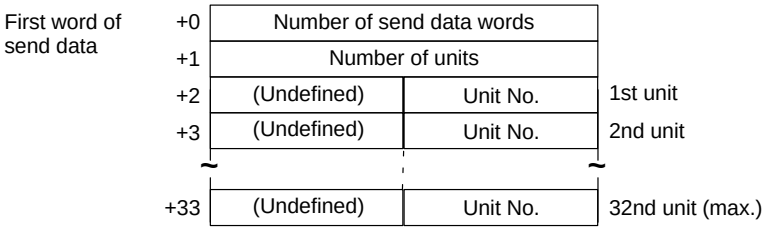

Offset	Contents (data format)	Data
+0	Number of send data words (4 digits BCD)	Number of units + 2
+1	Number of units (4 digits BCD)	0001 to 0032
+2	1st unit Unit No. (2 digits BCD)	00 to 31
+3	2nd unit Unit No. (2 digits BCD)	00 to 31
	• • •	
+33 (max.)	32nd unit Unit No. (2 digits BCD)	00 to 31

Receive Data Word Allocation (3rd Operand of PMCR)

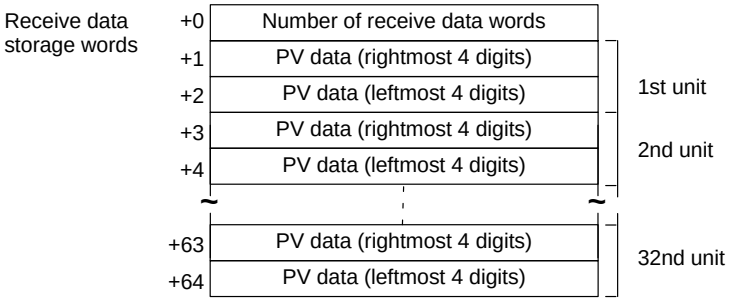

Offset	Contents (data format)	Data
+0	Number of receive data words (4digits BCD)	Number of units × 2 + 1
+1	1st unit PV data (rightmost 4 digits) (4 digits BCD)	00000000 to 09999000 F indicates a negative number.
+2	1st unit PV data (leftmost 4 digits) (4 digits BCD)	
+3	2nd unit PV data (rightmost 4 digits) (4 digits BCD)	00000000 to 09999000 F indicates a negative number.
+4	2nd unit PV data (leftmost 4 digits) (4 digits BCD)	
	• • •	
+63	32nd unit PV data (rightmost 4 digits) (4 digits BCD)	00000000 to 09999000 F indicates a negative number.
+64	32nd unit PV data (leftmost 4 digits) (4 digits BCD)	

Read SP Data (Sequence No. 255)

Reads the SP data for the variable type “analog data” in the variable area.

Send Data Word Allocation (2nd Operand of PMCR)

First word of send data				
	+0	Number of send data words		
	+1	Number of units		
	+2	(Undefined)	Unit No.	1st unit
	+3	(Undefined)	Unit No.	2nd unit
	~			
	+33	(Undefined)	Unit No.	32nd unit (max.)

Offset	Contents (data format)	Data
+0	Number of send data words (4 digits BCD)	Number of units + 2
+1	Number of units (4 digits BCD)	0001 to 0032
+2	1st unit Unit No. (2 digits BCD)	00 to 31
+3	2nd unit Unit No. (2 digits BCD)	00 to 31
	• • •	
+33 (max.)	32nd unit Unit No. (2 digits BCD)	00 to 31

Receive Data Word Allocation (3rd Operand of PMCR)

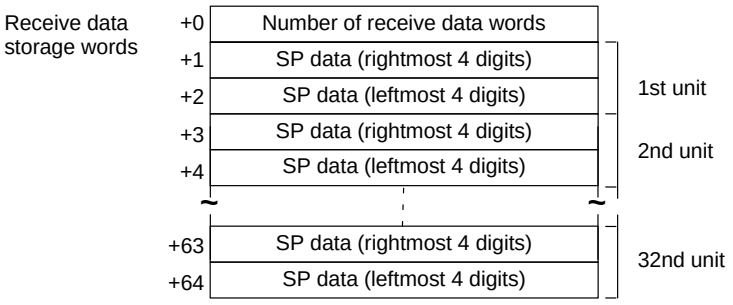

Offset	Contents (data format)	Data
+0	Number of receive data words (4 digits BCD)	Number of units × 2 + 1
+1	1st unit SP data (rightmost 4 digits) (4 digits BCD)	00000000 to 09999000 F indicates a negative number.
+2	1st unit SP data (leftmost 4 digits) (4 digits BCD)	
+3	2nd unit SP data (rightmost 4 digits) (4 digits BCD)	00000000 to 09999000 F indicates a negative number.
+4	2nd unit SP data (leftmost 4 digits) (4 digits BCD)	
	• • •	
+63	32nd unit SP data (rightmost 4 digits) (4 digits BCD)	00000000 to 09999000 F indicates a negative number.
+64	32nd unit SP data (leftmost 4 digits) (4 digits BCD)	

Read MV Data (Sequence No. 256)

Reads the MV for the variable type “analog data” in the variable area.

Send Data Word Allocation (2nd Operand of PMCR)

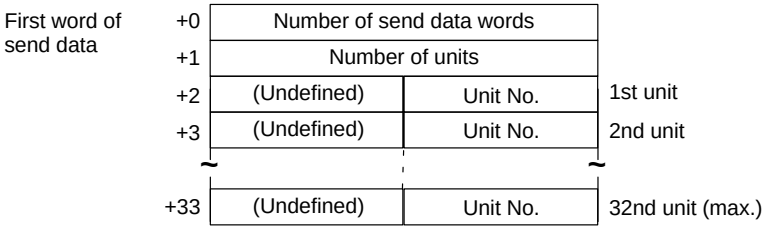

Offset	Contents (data format)	Data
+0	Number of send data words (4 digits BCD)	Number of units + 2
+1	Number of units (4 digits BCD)	0001 to 0032
+2	1st unit Unit No. (2 digits BCD)	00 to 31
+3	2nd unit Unit No. (2 digits BCD)	00 to 31
	• • •	
+33 (max.)	32nd unit Unit No. (2 digits BCD)	00 to 31

Receive Data Word Allocation (3rd Operand of PMCR)

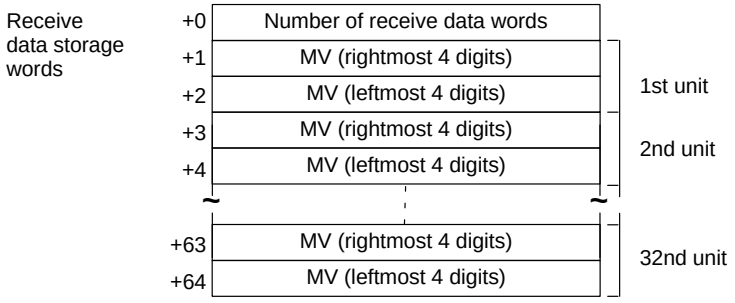

Offset	Contents (data format)	Data
+0	Number of receive data words (4 digits BCD)	Number of units × 2 + 1
+1	1st unit MV (rightmost 4 digits) (4 digits BCD)	00000000 to 09999000 F indicates a negative number.
+2	1st unit MV (leftmost 4 digits) (4 digits BCD)	
+3	2nd unit MV (rightmost 4 digits) (4 digits BCD)	00000000 to 09999000 F indicates a negative number.
+4	2nd unit MV (leftmost 4 digits) (4 digits BCD)	
	• • •	
+63	32nd unit MV (rightmost 4 digits) (4 digits BCD)	00000000 to 09999000 F indicates a negative number.
+64	32nd unit MV (leftmost 4 digits) (4 digits BCD)	

Read Control Monitor Data (Sequence No. 257)

Reads the control monitor data (SP/PV/MV) in the variable area.

Send Data Word Allocation (2nd Operand of PMCR)

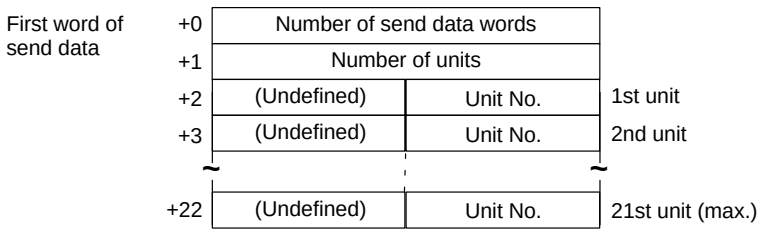

Offset	Contents (data format)	Data
+0	Number of send data words (4 digits BCD)	Number of units + 2
+1	Number of units (4 digits BCD)	0001 to 0021
+2	1st unit Unit No. (2 digits BCD)	00 to 31
+3	2nd unit Unit No. (2 digits BCD)	00 to 31
	• • •	
+22 (max.)	21st unit Unit No. (2 digits BCD)	00 to 31

Receive Data Word Allocation (3rd Operand of PMCR)

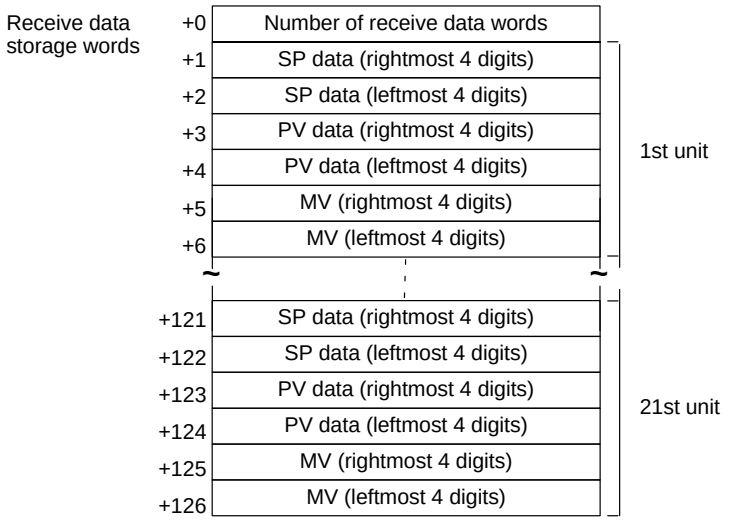

Offset	Contents (data format)	Data
+0	1st unit Number of receive data words (4 digits BCD)	Number of units × 6 + 1
+1	1st unit SP data (rightmost 4 digits) (4 digits BCD)	00000000 to 09999000 F indicates a negative number.
+2	1st unit SP data (leftmost 4 digits) (4 digits BCD)	
+3	1st unit PV data (rightmost 4 digits) (4 digits BCD)	00000000 to 09999000 F indicates a negative number.
+4	1st unit PV data (leftmost 4 digits) (4 digits BCD)	
+5	1st unit MV (rightmost 4 digits) (4 digits BCD)	00000000 to 09999000 F indicates a negative number.
+6	1st unit MV (leftmost 4 digits) (4 digits BCD)	
	• • •	
+125	21st unit MV (rightmost 4 digits) (4 digits BCD)	00000000 to 09999000 F indicates a negative number.
+126	21st unit MV (leftmost 4 digits) (4 digits BCD)	

Read Adjustment Parameters (Sequence No. 258)

Reads the adjustment parameters in the parameter area and stores the results in the specified words.

Send Data Word Allocation (2nd Operand of PMCR)

First word of send data	+0	Number of send data words	
	+1	(Undefined)	Unit No.

Offset	Contents (data format)	Data
+0	Number of send data words (4 digits BCD)	0002 (fixed)
+1	Unit No. (2 digits BCD)	00 to 31

Receive Data Word Allocation (3rd Operand of PMCR)

Receive data storage words		
+0	Number of receive data words	
+1	— Fixed SP	(rightmost 4 digits)
+2		(leftmost 4 digits)
+3	— Control output 1 pulse cycle	(rightmost 4 digits)
+4		(leftmost 4 digits)
+5	— Control output 2 pulse cycle	(rightmost 4 digits)
+6		(leftmost 4 digits)
+7	— Fuzzy strength	(rightmost 4 digits)
+8		(leftmost 4 digits)
+9	— Cooling coefficient	(rightmost 4 digits)
+10		(leftmost 4 digits)
+11	— Heater burnout alarm setting	(rightmost 4 digits)
+12		(leftmost 4 digits)
+13	— Position-proportional dead band	(rightmost 4 digits)
+14		(leftmost 4 digits)
+15	— Switching output hysteresis	(rightmost 4 digits)
+16		(leftmost 4 digits)
+17	— ON/OFF count alarm setting	(rightmost 4 digits)
+18		(leftmost 4 digits)
+19	— ON/OFF control hysteresis	(rightmost 4 digits)
+20		(leftmost 4 digits)
+21	— Manual reset	(rightmost 4 digits)
+22		(leftmost 4 digits)
+23	— SP setting lower limit	(rightmost 4 digits)
+24		(leftmost 4 digits)
+25	— SP setting upper limit	(rightmost 4 digits)
+26		(leftmost 4 digits)
+27	— SP rise rate limit	(rightmost 4 digits)
+28		(leftmost 4 digits)
+29	— SP fall rate limit	(rightmost 4 digits)
+30		(leftmost 4 digits)
+31	— MV rate-of-change limit	(rightmost 4 digits)
+32		(leftmost 4 digits)
+33	— Secondary loop fixed SP	(rightmost 4 digits)
+34		(leftmost 4 digits)
+35	— Secondary loop P	(rightmost 4 digits)
+36		(leftmost 4 digits)
+37	— Secondary loop I	(rightmost 4 digits)
+38		(leftmost 4 digits)
+39	— Secondary loop D	(rightmost 4 digits)
+40		(leftmost 4 digits)
+41	— Secondary loop manual reset	(rightmost 4 digits)
+42		(leftmost 4 digits)

Offset	Contents (data format)	Data
+0	Number of receive data words (4 digits BCD)	0043
+1 to 2	Fixed SP (8 digits BCD)	00000000 to 09999000 F indicates a negative number.
+3 to 4	Control output 1 pulse cycle (8 digits BCD)	
+5 to 6	Control output 2 pulse cycle (8 digits BCD)	
+7 to 8	Fuzzy strength (8 digits BCD)	
+9 to 10	Cooling coefficient (8 digits BCD)	
+11 to 12	Heater burnout alarm setting (8 digits BCD)	
+13 to 14	Position-proportional dead band (8 digits BCD)	
+15 to 16	Switching output hysteresis (8 digits BCD)	
+17 to 18	ON/OFF count alarm setting (8 digits BCD)	
+19 to 20	ON/OFF control hysteresis (8 digits BCD)	
+21 to 22	Manual reset (8 digits BCD)	
+23 to 24	SP setting lower limit (8 digits BCD)	
+25 to 26	SP setting upper limit (8 digits BCD)	
+27 to 28	SP rise rate limit (8 digits BCD)	
+29 to 30	SP fall rate limit (8 digits BCD)	
+31 to 32	MV rate-of-change limit (8 digits BCD)	
+33 to 34	Secondary loop fixed SP (8 digits BCD)	
+35 to 36	Secondary loop P (8 digits BCD)	
+37 to 38	Secondary loop I (8 digits BCD)	
+39 to 40	Secondary loop D (8 digits BCD)	
+41 to 42	Secondary loop manual reset (8 digits BCD)	

Write Adjustment Parameters (Sequence No. 259)

Writes the adjust parameters in the parameter area.

Send Data Word Allocation (2nd Operand of PMCR)

First word of send data	+0	Number of send data words	
	+1	(Undefined)	Unit No.
	+2	Fixed SP	(rightmost 4 digits)
	+3		(leftmost 4 digits)
	+4	Control output 1 pulse cycle	(rightmost 4 digits)
	+5		(leftmost 4 digits)
	+6	Control output 2 pulse cycle	(rightmost 4 digits)
	+7		(leftmost 4 digits)
	+8	Fuzzy strength	(rightmost 4 digits)
	+9		(leftmost 4 digits)
	+10	Cooling coefficient	(rightmost 4 digits)
	+11		(leftmost 4 digits)
	+12	Heater burnout alarm setting	(rightmost 4 digits)
	+13		(leftmost 4 digits)
	+14	Position-proportional dead band	(rightmost 4 digits)
	+15		(leftmost 4 digits)
	+16	Switching output hysteresis	(rightmost 4 digits)
	+17		(leftmost 4 digits)
	+18	ON/OFF count alarm setting	(rightmost 4 digits)
	+19		(leftmost 4 digits)
	+20	ON/OFF control hysteresis	(rightmost 4 digits)
	+21		(leftmost 4 digits)
	+22	Manual reset	(rightmost 4 digits)
	+23		(leftmost 4 digits)
	+24	SP setting lower limit	(rightmost 4 digits)
	+25		(leftmost 4 digits)
	+26	SP setting upper limit	(rightmost 4 digits)
	+27		(leftmost 4 digits)
	+28	SP rise rate limit	(rightmost 4 digits)
	+29		(leftmost 4 digits)
	+30	SP fall rate limit	(rightmost 4 digits)
	+31		(leftmost 4 digits)
	+32	MV change rate limit	(rightmost 4 digits)
	+33		(leftmost 4 digits)
	+34	Secondary loop fixed SP	(rightmost 4 digits)
	+35		(leftmost 4 digits)
	+36	Secondary loop P	(rightmost 4 digits)
	+37		(leftmost 4 digits)
	+38	Secondary loop I	(rightmost 4 digits)
	+39		(leftmost 4 digits)
	+40	Secondary loop D	(rightmost 4 digits)
	+41		(leftmost 4 digits)
	+42	Secondary loop manual reset	(rightmost 4 digits)
	+43		(leftmost 4 digits)

Offset	Contents (data format)	Data
+0	Number of send data words (4 digits BCD)	0044 (fixed)
+1	Unit No. (2 digits BCD)	00 to 31
+2 to 3	Fixed SP (8 digits BCD)	00000000 to 09999000
+4 to 5	Control output 1 pulse cycle (8 digits BCD)	
+6 to 7	Control output 2 pulse cycle (8 digits BCD)	
+8 to 9	Fuzzy strength (8 digits BCD)	
+10 to 11	Cooling coefficient (8 digits BCD)	
+12 to 13	Heater burnout alarm setting (8 digits BCD)	
+14 to 15	Position-proportional dead band (8 digits BCD)	
+16 to 17	Switching output hysteresis (8 digits BCD)	
+18 to 19	ON/OFF count alarm setting (8 digits BCD) value	
+20 to 21	ON/OFF control hysteresis (8 digits BCD)	
+22 to 23	Manual reset (8 digits BCD)	
+24 to 25	SP setting lower limit (8 digits BCD)	
+26 to 27	SP setting upper limit (8 digits BCD)	
+28 to 29	SP rise rate limit (8 digits BCD)	
+30 to 31	SP fall rate limit (8 digits BCD)	
+32 to 33	MV rate-of-change limit (8 digits BCD)	
+34 to 35	Secondary loop fixed SP (8 digits BCD)	
+36 to 37	Secondary loop P (8 digits BCD)	
+38 to 39	Secondary loop I (8 digits BCD)	
+40 to 41	Secondary loop D (8 digits BCD)	
+42 to 43	Secondary loop manual reset (8 digits BCD)	

Receive Data Word Allocation (3rd Operand of PMCR)

None.

Read PID Control Parameters 1 (Sequence No. 260)

Reads PID parameters No. 1 to 4 from PID control parameters in the parameter area and stores the results in the specified words.

Send Data Word Allocation (2nd Operand of PMCR)

First word of send data	+0	Number of send data words	
	+1	(Undefined)	Unit No.

Offset	Contents (data format)	Data
+0	Number of send data words (4 digits BCD)	0002 (fixed)
+1	Unit No. (2 digits BCD)	00 to 31

Receive Data Word Allocation (3rd Operand of PMCR)

Receive data storage words			
	+0	Number of receive data words	
	+1	PID No. 1 P	(rightmost 4 digits)
	+2	PID No. 1 P	(leftmost 4 digits)
	+3	PID No. 1 I	(rightmost 4 digits)
	+4	PID No. 1 I	(leftmost 4 digits)
	+5	PID No. 1 D	(rightmost 4 digits)
	+6	PID No. 1 D	(leftmost 4 digits)
	+7	PID No. 1 MV lower limit	(rightmost 4 digits)
	+8	PID No. 1 MV lower limit	(leftmost 4 digits)
	+9	PID No. 1 MV upper limit	(rightmost 4 digits)
	+10	PID No. 1 MV upper limit	(leftmost 4 digits)
	+11	PID No. 1 PV bias value	(rightmost 4 digits)
	+12	PID No. 1 PV bias value	(leftmost 4 digits)
	+13	PID No. 1 Automatic selection range upper limit	(rightmost 4 digits)
	+14	PID No. 1 Automatic selection range upper limit	(leftmost 4 digits)
	~	⋮	~
	+51	PID No. 4 MV upper limit	(rightmost 4 digits)
	+52	PID No. 4 MV upper limit	(leftmost 4 digits)
	+53	PID No. 4 PV bias value	(rightmost 4 digits)
	+54	PID No. 4 PV bias value	(leftmost 4 digits)
	+55	PID No. 4 Automatic selection range upper limit	(rightmost 4 digits)
	+56	PID No. 4 Automatic selection range upper limit	(leftmost 4 digits)

Offset	Contents (data format)	Data
+0	Number of receive data words (4 digits BCD)	0057
+1 to 2	PID No. 1 P (8 digits BCD)	00000000 to 09999000
+3 to 4	PID No. 1 I (8 digits BCD)	
+5 to 6	PID No. 1 D (8 digits BCD)	
+7 to 8	PID No. 1 MV lower limit (8 digits BCD)	
+9 to 10	PID No. 1 MV upper limit (8 digits BCD)	
+11 to 12	PID No. 1 PV bias value (8 digits BCD)	
+13 to 14	PID No. 1 Automatic selection range upper limit (8 digits BCD)	
	● ● ●	
+43 to 44	PID No. 4 P (8 digits BCD)	
+45 to 46	PID No. 4 I (8 digits BCD)	
+47 to 48	PID No. 4 D (8 digits BCD)	
+49 to 50	PID No. 4 MV lower limit (8 digits BCD)	
+51 to 52	PID No. 4 MV upper limit (8 digits BCD)	
+53 to 54	PID No. 4 PV bias value (8 digits BCD)	
+55 to 56	PID No. 4 Automatic selection range upper limit (8 digits BCD)	

Read PID Control Parameters 2 (Sequence No. 261)

Reads PID parameters No. 5 to 8 from the PID control parameters in the parameter area and stores the results in the specified words.

Send Data Word Allocation (2nd Operand of PMCR)

First word of send data	+0	Number of send data words	
	+1	(Undefined)	Unit No.

Offset	Contents (data format)	Data
+0	Number of send data words (4 digits BCD)	0002 (fixed)
+1	Unit No. (2 digits BCD)	00 to 31

Receive Data Word Allocation (3rd Operand of PMCR)

Receive data storage words	+0	Number of receive data words	
	+1	PID No. 5 P	(rightmost 4 digits)
	+2	PID No. 5 P	(leftmost 4 digits)
	+3	PID No. 5 I	(rightmost 4 digits)
	+4	PID No. 5 I	(leftmost 4 digits)
	+5	PID No. 5 D	(rightmost 4 digits)
	+6	PID No. 5 D	(leftmost 4 digits)
	+7	PID No. 5 MV lower limit	(rightmost 4 digits)
	+8	PID No. 5 MV lower limit	(leftmost 4 digits)
	+9	PID No. 5 MV upper limit	(rightmost 4 digits)
	+10	PID No. 5 MV upper limit	(leftmost 4 digits)
	+11	PID No. 5 PV bias value	(rightmost 4 digits)
	+12	PID No. 5 PV bias value	(leftmost 4 digits)
	+13	PID No. 5 Automatic selection range upper limit	(rightmost 4 digits)
	+14	PID No. 5 Automatic selection range upper limit	(leftmost 4 digits)
	~	⋮	~
	+51	PID No. 8 MV upper limit	(rightmost 4 digits)
	+52	PID No. 8 MV upper limit	(leftmost 4 digits)
	+53	PID No. 8 PV bias value	(rightmost 4 digits)
	+54	PID No. 8 PV bias value	(leftmost 4 digits)
	+55	PID No. 8 Automatic selection range upper limit	(rightmost 4 digits)
	+56	PID No. 8 Automatic selection range upper limit	(leftmost 4 digits)

Offset	Contents (data format)	Data
+0	Number of receive data words (4 digits BCD)	0057
+1 to 2	PID No. 5 P (8 digits BCD)	00000000 to 09999000
+3 to 4	PID No. 5 I (8 digits BCD)	
+5 to 6	PID No. 5 D (8 digits BCD)	
+7 to 8	PID No. 5 MV lower limit (8 digits BCD)	
+9 to 10	PID No. 5 MV upper limit (8 digits BCD)	
+11 to 12	PID No. 5 PV bias value (8 digits BCD)	
+13 to 14	PID No. 5 Automatic selection range upper limit (8 digits BCD)	
	• • •	
+43 to 44	PID No. 8 P (8 digits BCD)	
+45 to 46	PID No. 8 I (8 digits BCD)	
+47 to 48	PID No. 8 D (8 digits BCD)	
+49 to 50	PID No. 8 MV lower limit (8 digits BCD)	
+51 to 52	PID No. 8 MV upper limit (8 digits BCD)	
+53 to 54	PID No. 8 PV bias value (8 digits BCD)	
+55 to 56	PID No. 8 Automatic selection range upper limit (8 digits BCD)	

Write PID Control Parameters 1 (Sequence No. 262)

Writes PID parameters No. 1 to 4 to the PID control parameters in the parameter area.

Send Data Word Allocation (2nd Operand of PMCR)

First word of send data				
	+0	Number of send data words		
	+1	(Undefined)	Unit No.	
	+2	PID No. 1 P		(rightmost 4 digits)
	+3	PID No. 1 P		(leftmost 4 digits)
	+4	PID No. 1 I		(rightmost 4 digits)
	+5	PID No. 1 I		(leftmost 4 digits)
	+6	PID No. 1 D		(rightmost 4 digits)
	+7	PID No. 1 D		(leftmost 4 digits)
	+8	PID No. 1 MV lower limit		(rightmost 4 digits)
	+9	PID No. 1 MV lower limit		(leftmost 4 digits)
	+10	PID No. 1 MV upper limit		(rightmost 4 digits)
	+11	PID No. 1 MV upper limit		(leftmost 4 digits)
	+12	PID No. 1 PV bias value		(rightmost 4 digits)
	+13	PID No. 1 PV bias value		(leftmost 4 digits)
	+14	PID No. 1 Automatic selection range upper limit		(rightmost 4 digits)
	+15	PID No. 1 Automatic selection range upper limit		(leftmost 4 digits)
	~	⋮		~
	+52	PID No. 4 MV upper limit		(rightmost 4 digits)
	+53	PID No. 4 MV upper limit		(leftmost 4 digits)
	+54	PID No. 4 PV bias value		(rightmost 4 digits)
	+55	PID No. 4 PV bias value		(leftmost 4 digits)
	+56	PID No. 4 Automatic selection range upper limit		(rightmost 4 digits)
	+57	PID No. 4 Automatic selection range upper limit		(leftmost 4 digits)

Offset	Contents (data format)	Data
+0	Number of send data words (4 digits BCD)	0058 (fixed)
+1	Unit No. (2 digits BCD)	00 to 31
+2 to 3	PID No. 1 P (8 digits BCD)	00000000 to 09999000
+4 to 5	PID No. 1 I (8 digits BCD)	
+6 to 7	PID No. 1 D (8 digits BCD)	
+8 to 9	PID No. 1 MV lower limit (8 digits BCD)	
+10 to 11	PID No. 1 MV upper limit (8 digits BCD)	
+12 to 13	PID No. 1 PV bias value (8 digits BCD)	
+14 to 15	PID No. 1 Automatic selection range upper limit (8 digits BCD)	
	• • •	
+44 to 45	PID No. 4 P (8 digits BCD)	
+46 to 47	PID No. 4 I (8 digits BCD)	
+48 to 49	PID No. 4 D (8 digits BCD)	
+50 to 51	PID No. 4 MV lower limit (8 digits BCD)	
+52 to 53	PID No. 4 MV upper limit (8 digits BCD)	
+54 to 55	PID No. 4 PV bias value (8 digits BCD)	
+56 to 57	PID No. 4 Automatic selection range upper limit (8 digits BCD)	

Receive Data Word Allocation (3rd Operand of PMCR)

None.

Write PID Control Parameters 2 (Sequence No. 263)

Writes the PID parameters No. 5 to 8 to the PID control parameters in the parameter area.

Send Data Word Allocation (2nd Operand of PMCR)

First word of send data			
+0	Number of send data words		
+1	(Undefined)	Unit No.	
+2	PID No. 5 P		(rightmost 4 digits)
+3	PID No. 5 P		(leftmost 4 digits)
+4	PID No. 5 I		(rightmost 4 digits)
+5	PID No. 5 I		(leftmost 4 digits)
+6	PID No. 5 D		(rightmost 4 digits)
+7	PID No. 5 D		(leftmost 4 digits)
+8	PID No. 5 MV lower limit		(rightmost 4 digits)
+9	PID No. 5 MV lower limit		(leftmost 4 digits)
+10	PID No. 5 MV upper limit		(rightmost 4 digits)
+11	PID No. 5 MV upper limit		(leftmost 4 digits)
+12	PID No. 5 PV bias value		(rightmost 4 digits)
+13	PID No. 5 PV bias value		(leftmost 4 digits)
+14	PID No. 5 Automatic selection range upper limit		(rightmost 4 digits)
+15	PID No. 5 Automatic selection range upper limit		(leftmost 4 digits)
~	⋮		~
+52	PID No. 8 MV upper limit		(rightmost 4 digits)
+53	PID No. 8 MV upper limit		(leftmost 4 digits)
+54	PID No. 8 PV bias value		(rightmost 4 digits)
+55	PID No. 8 PV bias value		(leftmost 4 digits)
+56	PID No. 8 Automatic selection range upper limit		(rightmost 4 digits)
+57	PID No. 8 Automatic selection range upper limit		(leftmost 4 digits)

Offset	Contents (data format)	Data
+0	Number of send data words (4 digits BCD)	0058 (fixed)
+1	Unit No. (2 digits BCD)	00 to 31
+2 to 3	PID No. 5 P (8 digits BCD)	00000000 to 09999000
+4 to 5	PID No. 5 I (8 digits BCD)	
+6 to 7	PID No. 5 D (8 digits BCD)	
+8 to 9	PID No. 5 MV lower limit (8 digits BCD)	
+10 to 11	PID No. 5 MV upper limit (8 digits BCD)	
+12 to 13	PID No. 5 PV bias value (8 digits BCD)	
+14 to 15	PID No. 5 Automatic selection range upper limit (8 digits BCD)	
	• • •	
+44 to 45	PID No. 8 P (8 digits BCD)	
+46 to 47	PID No. 8 I (8 digits BCD)	
+48 to 49	PID No. 8 D (8 digits BCD)	
+50 to 51	PID No. 8 MV lower limit (8 digits BCD)	
+52 to 53	PID No. 8 MV upper limit (8 digits BCD)	
+54 to 55	PID No. 8 PV bias value (8 digits BCD)	
+56 to 57	PID No. 8 Automatic selection range upper limit (8 digits BCD)	

Receive Data Word Allocation (3rd Operand of PMCR)

None.

Read Local SP (Sequence No. 264)

Reads the local SP in the program parameter area.

Send Data Word Allocation (2nd Operand of PMCR)

First word of send data				
	+0	Number of send data words		
	+1	Number of units		
	+2	(Undefined)	Unit No.	1st unit
	+3	Pattern No.	Step No.	
	+4	(Undefined)	Unit No.	2nd unit
	+5	Pattern No.	Step No.	
	~		~	
	+64	(Undefined)	Unit No.	32nd unit
	+65	Pattern No.	Step No.	

Offset	Contents (data format)	Data
+0	Number of send data words (4 digits BCD)	Number of units × 2 + 2
+1	Number of units (4 digits BCD)	0001 to 0032
+2	1st unit Unit No. (2 digits BCD)	00 to 31
+3	1st unit Pattern No. (2 digits BCD) Step No. (2 digits BCD)	 00 to 63 00 to 63
	• • •	
+64	32nd unit Unit No. (2 digits BCD)	00 to 31
+65 (max.)	32nd unit Pattern No. (2 digits BCD) Step No. (2 digits BCD)	 00 to 63 00 to 63

Receive Data Word Allocation (3rd Operand of PMCR)

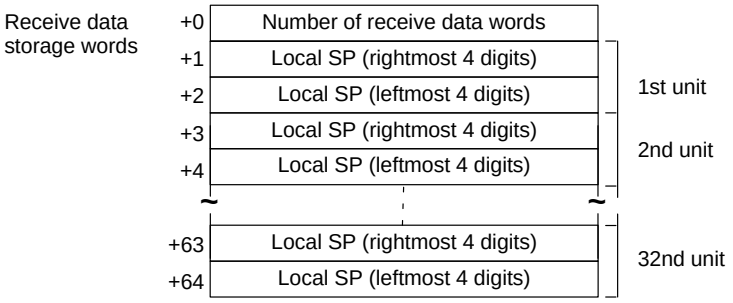

Offset	Contents (data format)	Data
+0	Number of receive data words (4 digits BCD)	Number of units × 2 + 1
+1	1st unit Local SP (rightmost 4 digits) (4 digits BCD)	00000000 to 09999000 F indicates a negative number.
+2	1st unit Local SP (leftmost 4 digits) (4 digits BCD)	
+3	2nd unit Local SP (rightmost 4 digits) (4 digits BCD)	00000000 to 09999000
+4	2nd unit Local SP (leftmost 4 digits) (4 digits BCD)	
	• • •	
+63	32nd unit Local SP (rightmost 4 digits) (4 digits BCD)	00000000 to 09999000
+64	32nd unit Local SP (leftmost 4 digits) (4 digits BCD)	

Write Local SP (Sequence No. 265)

Writes the local SP to the program parameter area.

Send Data Word Allocation (2nd Operand of PMCR)

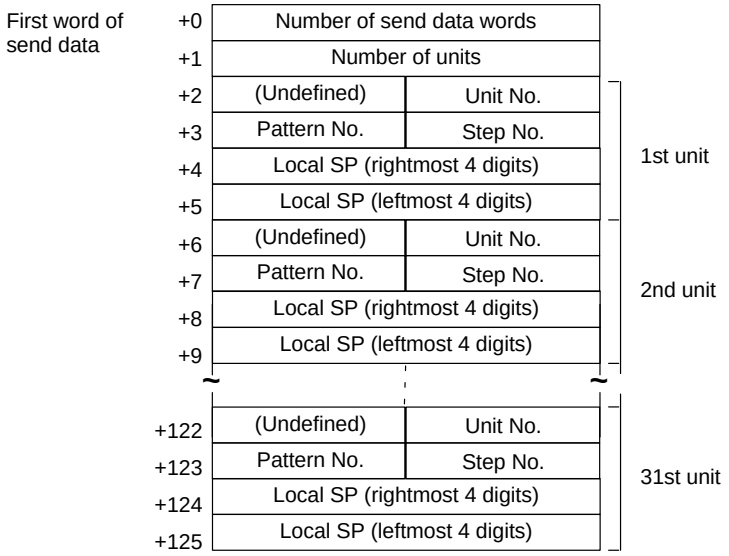

Offset	Contents (data format)	Data
+0	Number of send data words (4 digits BCD)	Number of units × 4 + 2
+1	Number of units (4 digits BCD)	0001 to 0031
+2	1st unit Unit No. (2 digits BCD)	00 to 31
+3	1st unit Pattern No. (2 digits BCD) Step No. (2 digits BCD)	 00 to 63 00 to 63
+4	1st unit Local SP (rightmost 4 digits) (4 digits BCD)	00000000 to 09999000
+5	1st unit Local SP (leftmost 4 digits) (4 digits BCD)	
	• • •	
+122	31st unit Unit No. (2 digits BCD)	00 to 31
+123	31st unit Pattern No. (2 digits BCD) Step No. (2 digits BCD)	 00 to 63 00 to 63
+124	31st unit Local SP (rightmost 4 digits) (4 digits BCD)	00000000 to 09999000
+125	31st unit Local SP (leftmost 4 digits) (4 digits BCD)	

Receive Data Word Allocation (3rd Operand of PMCR)

None.

Read Program Parameters (Sequence No. 266)

Reads the local SP, step time, PID set No., wait code, and events from 1 to 10 set values in the program parameter area.

Send Data Word Allocation (2nd Operand of PMCR)

First word of send data				
	+0	Number of send data words		
	+1	Number of units		
	+2	(Undefined)	Unit No.	1st unit
	+3	Pattern No.	Step No.	
	+4	(Undefined)	Unit No.	2nd unit
	+5	Pattern No.	Step No.	
	+6	(Undefined)	Unit No.	3rd unit
	+7	Pattern No.	Step No.	
	+8	(Undefined)	Unit No.	4th unit
	+9	Pattern No.	Step No.	

Offset	Contents (data format)	Data
+0	Number of send data words (4 digits BCD)	Number of units × 2 + 2
+1	Number of units (4 digits BCD)	0001 to 0004
+2	1st unit Unit No. (2 digits BCD)	00 to 31
+3	1st unit Pattern No. (2 digits BCD) Step No. (2 digits BCD)	 00 to 63 00 to 63
	• • •	
+8	4th unit Unit No. (2 digits BCD)	00 to 31
+9 (max.)	4th unit Pattern No. (2 digits BCD) Step No. (2 digits BCD)	 00 to 63 00 to 63

Receive Data Word Allocation (3rd Operand of PMCR)

Receive data storage words		
+0	Number of receive data words	
+1	Local SP (rightmost)	1st unit
+2	Local SP (leftmost)	
+3	Step bank time (rightmost)	
+4	Step bank time (leftmost)	
+5	PID set No. (rightmost)	
+6	PID set No. (leftmost)	
+7	Wait code (rightmost)	
+8	Wait code (leftmost)	
+9	Event 1 setting (rightmost)	
+10	Event 1 setting (leftmost)	
~	~	
+27	Event 10 setting (rightmost)	
+28	Event 10 setting (leftmost)	
~	~	
+85	Local SP (rightmost)	4th unit (max.)
+86	Local SP (leftmost)	
+87	Step bank time (rightmost)	
+88	Step bank time (leftmost)	
+89	PID set No. (rightmost)	
+90	PID set No. (leftmost)	
+91	Wait code (rightmost)	
+92	Wait code (leftmost)	
+93	Event 1 setting (rightmost)	
+94	Event 1 setting (leftmost)	
~	~	
+111	Event 10 setting (rightmost)	
+112	Event 10 setting (leftmost)	

Offset	Contents (data format)	Data
+0	Number of receive data words (4digits BCD)	Number of units × 28 + 1
+1 to 2	1st unit Local SP (8 digits BCD)	00000000 to 09999000 F indicates a negative number.
+3 to 4	1st unit Step time) (8 digits BCD)	
+5 to 6	1st unit PID set No. (8 digits BCD)	
+7 to 8	1st unit Wait code (8 digits BCD)	
+9 to 10	1st unit Event 1 setting (8 digits BCD)	
+11 to 12	1st unit Event 2 setting (8 digits BCD)	
	• •	
+27 to 28	1st unit Event 10 setting (8 digits BCD)	
+29 to 30	1st unit Local SP (8 digits BCD)	
	• •	
+109 to 110	4th unit Event 9 setting (8 digits BCD)	
+111 to 112 (max.)	4th unit Event 10 setting (8 digits BCD)	

Write Program Parameters (Sequence No. 267)

Writes the local SP, step time, PID set No., wait code, and events from 1 to 10 settings in the program parameter area.

Send Data Word Allocation (2nd Operand of PMCR)

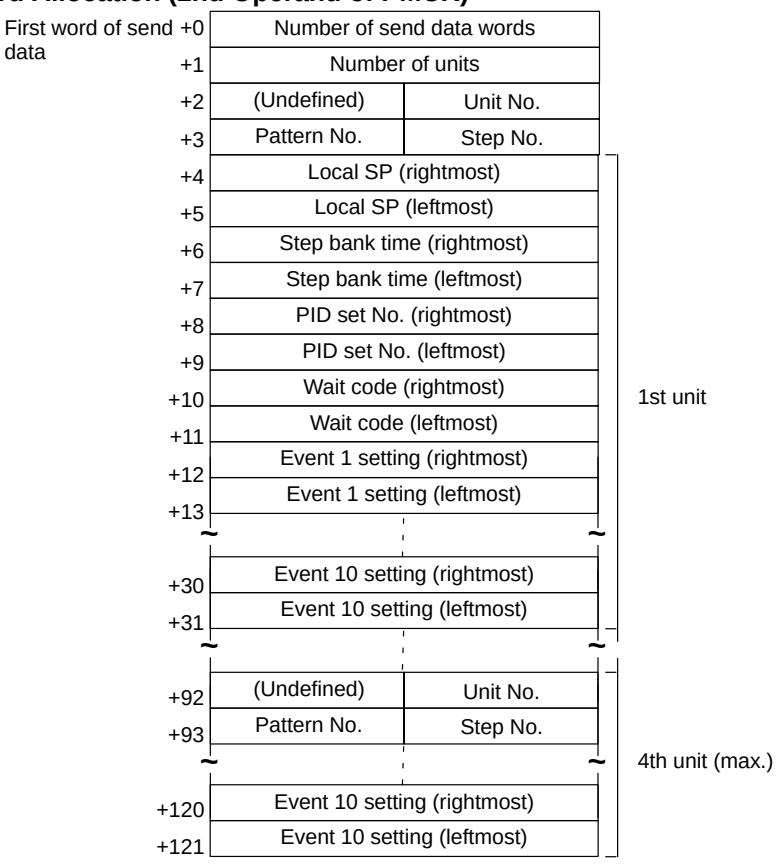

Offset	Contents (data format)	Data
+0	Number of send data words (4 digits BCD)	Number of units × 30 + 2
+1	Number of units (4 digits BCD)	0001 to 0004
+2	1st unit Unit No. (2 digits BCD)	00 to 31
+3	1st unit Pattern No. (2 digits BCD) Step No. (2 digits BCD)	 00 to 63 00 to 63
+4 to 5	1st unit Local SP (8 digits BCD)	00000000 to 09999000
+6 to 7	1st unit Step time (8 digits BCD)	
+8 to 9	1st unit PID set No. (8 digits BCD)	
+10 to 11	1st unit Wait code (8 digits BCD)	
+12 to 13	1st unit Event 1 setting (8 digits BCD)	
+14 to 15	1st unit Event 2 setting (8 digits BCD)	
	• •	
+30 to 31	1st unit Event 10 setting (8 digits BCD)	
+32 to 33	2nd unit Local SP (8 digits BCD)	
	• •	
+111 to 112	4th unit Event 9 setting (8 digits BCD)	
+120 to 121 (max.)	4th unit Event 10 setting (8 digits BCD)	

Receive Data Word Allocation (3rd Operand of PMCR)

None.

Remote Setting Mode (Sequence No. 268)

Switches the setting mode to the remote setting mode.

Send Data Word Allocation (2nd Operand of PMCR)

First word of send data				
	+0	Number of send data words		
	+1	Number of units		
	+2	(Undefined)	Unit No.	1st unit
	+3	(Undefined)	Unit No.	2nd unit
	~		~	
	+33	(Undefined)	Unit No.	32nd unit (max.)

Offset	Contents (data format)	Data
+0	Number of send data words (4 digits BCD)	Number of units + 2
+1	Number of units (4 digits BCD)	0001 to 0032
+2	1st unit Unit No. (2 digits BCD)	00 to 31
+3	2nd unit Unit No. (2 digits BCD)	00 to 31
	• • •	
+33 (max.)	32nd unit Unit No. (2 digits BCD)	00 to 31

Receive Data Word Allocation (3rd Operand of PMCR)

None.

Local Setting Mode (Sequence No. 269)

Switches the setting mode to the local setting mode.

Send Data Word Allocation (2nd Operand of PMCR)

First word of send data				
	+0	Number of send data words		
	+1	Number of units		
	+2	(Undefined)	Unit No.	1st unit
	+3	(Undefined)	Unit No.	2nd unit
	~		~	
	+33	(Undefined)	Unit No.	32nd unit (max.)

Offset	Contents (data format)	Data
+0	Number of send data words (4 digits BCD)	Number of units + 2
+1	Number of units (4 digits BCD)	0001 to 0032
+2	1st unit Unit No. (2 digits BCD)	00 to 31
+3	2nd unit Unit No. (2 digits BCD)	00 to 31
	• • •	
+33 (max.)	32nd unit Unit No. (2 digits BCD)	00 to 31

Receive Data Word Allocation (3rd Operand of PMCR)

None.

External Setting Mode (Sequence No. 270)

Switches the setting mode to the external setting mode.

Send Data Word Allocation (2nd Operand of PMCR)

First word of send data				
	+0	Number of send data words		
	+1	Number of units		
	+2	(Undefined)	Unit No.	1st unit
	+3	(Undefined)	Unit No.	2nd unit
	~		~	
	+33	(Undefined)	Unit No.	32nd unit (max.)

Offset	Contents (data format)	Data
+0	Number of send data words (4 digits BCD)	Number of units + 2
+1	Number of units (4 digits BCD)	0001 to 0032
+2	1st unit Unit No. (2 digits BCD)	00 to 31
+3	2nd unit Unit No. (2 digits BCD)	00 to 31
	• • •	
+33 (max.)	32nd unit Unit No. (2 digits BCD)	00 to 31

Receive Data Word Allocation (3rd Operand of PMCR)

None.

Run Command (Sequence No. 271)

Starts control.

Send Data Word Allocation (2nd Operand of PMCR)

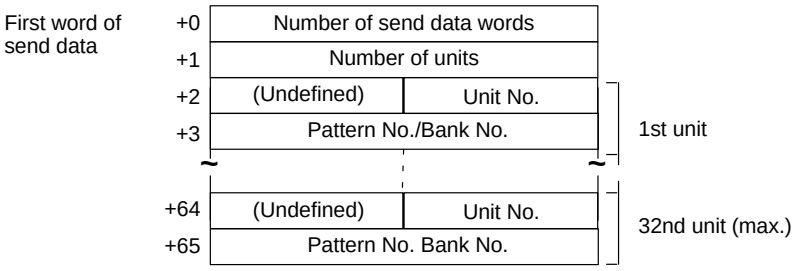

Offset	Contents (data format)	Data
+0	Number of send data words (4 digits BCD)	Number of units × 2 + 2
+1	Number of units (4 digits BCD)	0001 to 0032
+2	1st unit Unit No. (2 digits BCD)	00 to 31
+3	1st unit Pattern No./Bank No. (4 digits BCD)	0000 to 0063
+24	2nd unit Unit No. (2 digits BCD)	00 to 31
	• • •	
+64	32nd unit Unit No. (2 digits BCD)	00 to 31
+65 (max.)	32nd unit Pattern No./Bank No. (4 digits BCD)	0000 to 0063

Receive Data Word Allocation (3rd Operand of PMCR)

None.

Reset (Stop) (Sequence No. 272)

Stops control.

Send Data Word Allocation (2nd Operand of PMCR)

First word of send data				
	+0	Number of send data words		
	+1	Number of units		
	+2	(Undefined)	Unit No.	1st unit
	+3	(Undefined)	Unit No.	2nd unit
	~		~	
	+33	(Undefined)	Unit No.	32nd unit (max.)

Offset	Contents (data format)	Data
+0	Number of send data words (4 digits BCD)	Number of units + 2
+1	Number of units (4 digits BCD)	0001 to 0032
+2	1st unit Unit No. (2 digits BCD)	00 to 31
+3	2nd unit Unit No. (2 digits BCD)	00 to 31
	• • •	
+33 (max.)	32nd unit Unit No. (2 digits BCD)	00 to 31

Receive Data Word Allocation (3rd Operand of PMCR)

None.

Auto Mode (Sequence No. 273)

Switches the control mode to the auto mode.

Send Data Word Allocation (2nd Operand of PMCR)

First word of send data				
	+0	Number of send data words		
	+1	Number of units		
	+2	(Undefined)	Unit No.	1st unit
	+3	(Undefined)	Unit No.	2nd unit
	~		~	
	+33	(Undefined)	Unit No.	32nd unit (max.)

Offset	Contents (data format)	Data
+0	Number of send data words (4 digits BCD)	Number of units + 2
+1	Number of units (4 digits BCD)	0001 to 0032
+2	1st unit Unit No. (2 digits BCD)	00 to 31
+3	2nd unit Unit No. (2 digits BCD)	00 to 31
	• • •	
+33 (max.)	32nd unit Unit No. (2 digits BCD)	00 to 31

Receive Data Word Allocation (3rd Operand of PMCR)

None.

Manual Mode (Sequence No. 274)

Switches the control mode to the manual mode.

Send Data Word Allocation (2nd Operand of PMCR)

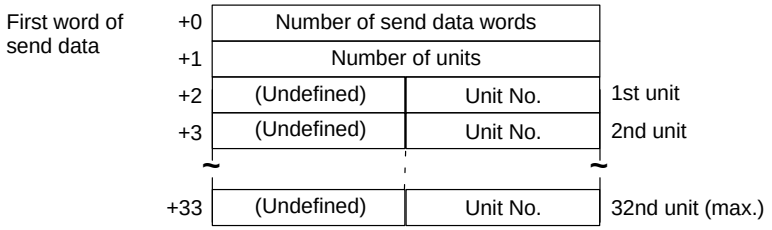

Offset	Contents (data format)	Data
+0	Number of send data words (4 digits BCD)	Number of units + 2
+1	Number of units (4 digits BCD)	0001 to 0032
+2	1st unit Unit No. (2 digits BCD)	00 to 31
+3	2nd unit Unit No. (2 digits BCD)	00 to 31
	• • •	
+33 (max.)	32nd unit Unit No. (2 digits BCD)	00 to 31

Receive Data Word Allocation (3rd Operand of PMCR)

None.

Execute A.T. (Sequence No. 275)

Executes A.T.

Send Data Word Allocation (2nd Operand of PMCR)

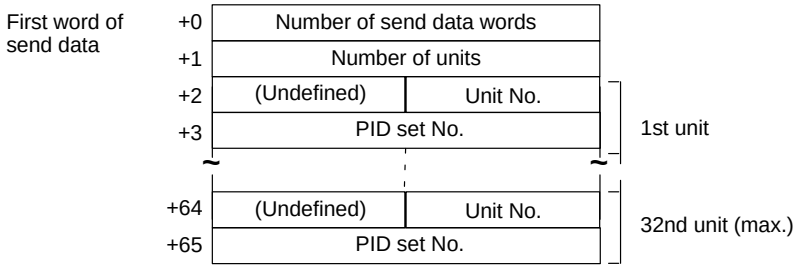

Offset	Contents (data format)	Data
+0	Number of send data words (4 digits BCD)	Number of units × 2 + 2
+1	Number of units (4 digits BCD)	0001 to 0032
+2	1st unit Unit No. (2 digits BCD)	00 to 31
+3	1st unit PID set No. (4 digits BCD)	0000 to 0008
+4	2nd unit Unit No. (2 digits BCD)	00 to 31
	• • •	
+64	32nd unit Unit No. (2 digits BCD)	00 to 31
+65 (max.)	32nd unit PID set No. (4 digits BCD)	0000 to 0008

Receive Data Word Allocation (3rd Operand of PMCR)

None.

Cancel A.T. (Sequence No. 276)

Cancels A.T.

Send Data Word Allocation (2nd Operand of PMCR)

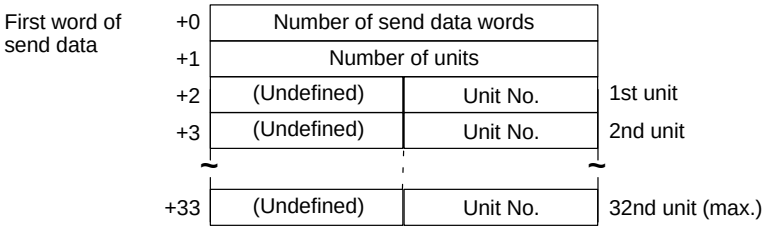

Offset	Contents (data format)	Data
+0	Number of send data words (4 digits BCD)	Number of units + 2
+1	Number of units (4 digits BCD)	0001 to 0032
+2	1st unit Unit No. (2 digits BCD)	00 to 31
+3	2nd unit Unit No. (2 digits BCD)	00 to 31
	• • •	
+33 (max.)	32nd unit Unit No. (2 digits BCD)	00 to 31

Receive Data Word Allocation (3rd Operand of PMCR)

None.

Change Pattern No. (Sequence No. 277)

Changes the pattern number.

Send Data Word Allocation (2nd Operand of PMCR)

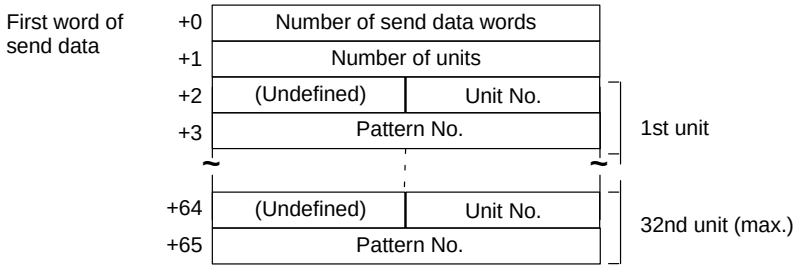

Offset	Contents (data format)	Data
+0	Number of send data words (4 digits BCD)	Number of units × 2 + 2
+1	Number of units (4 digits BCD)	0001 to 0032
+2	1st unit Unit No. (2 digits BCD)	00 to 31
+3	1st unit Pattern No. (4 digits BCD)	0001 to 0063
+4	2nd unit Unit No. (2 digits BCD)	00 to 31
	• • •	
+64	32nd unit Unit No. (2 digits BCD)	00 to 31
+65 (max.)	32nd unit Pattern No. (4 digits BCD)	0001 to 0063

Receive Data Word Allocation (3rd Operand of PMCR)

None.

Change Bank No. (Sequence No. 278)

Changes the bank number.

Send Data Word Allocation (2nd Operand of PMCR)

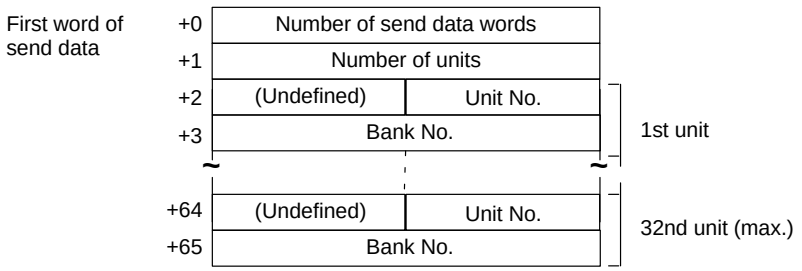

Offset	Contents (data format)	Data
+0	Number of send data words (4 digits BCD)	Number of units × 2 + 2
+1	Number of units (4 digits BCD)	0001 to 0032
+2	1st unit Unit No. (2 digits BCD)	00 to 31
+3	1st unit Bank No. (4 digits BCD)	0000 to 0007
+4	2nd unit Unit No. (2 digits BCD)	00 to 31
	• • •	
+64	32nd unit Unit No. (2 digits BCD)	00 to 31
+65 (max.)	32nd unit Bank No. (4 digits BCD)	0000 to 0007

Receive Data Word Allocation (3rd Operand of PMCR)

None.

Read Controller Status (Sequence No. 279)

Reads the Controller status.

Send Data Word Allocation (2nd Operand of PMCR)

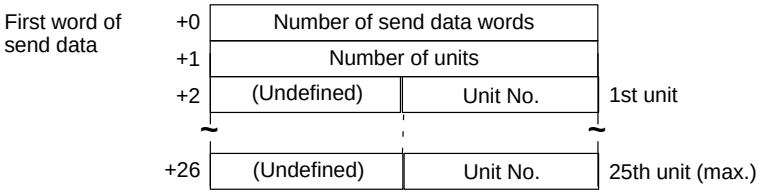

Offset	Contents (data format)	Data
+0	Number of send data words (4 digits BCD)	Number of units + 2
+1	Number of units (4 digits BCD)	0001 to 0025
+2	1st unit Unit No. (2 digits BCD)	00 to 31
	• • •	
+26 (max.)	25th unit Unit No. (2 digits BCD)	00 to 31

Receive Data Word Allocation (3rd Operand of PMCR)

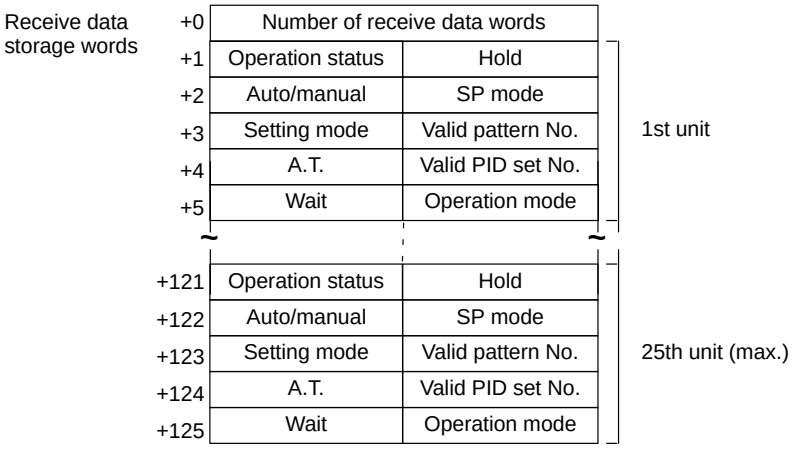

Offset	Contents (data format)	Data
+0	Number of receive data words (4 digits BCD)	Number of units × 5 + 1
+1	1st unit Operation status (2 digits BCD) Hold (2 digits BCD)	 00: Reset 01: Run 00: Not hold 01: Hold
+2	1st unit Auto/manual (2 digits BCD) SP mode (2 digits BCD)	 00: Auto mode 01: Manual mode 00: Local SP mode 01: Remote SP mode 02: Fixed SP mode
+3	1st unit Setting mode (2 digits BCD) Valid pattern No. (2 digits BCD)	 00: Local setting mode 01: Remote setting mode 02: External setting mode 00 to 63
+4	1st unit A.T. (2 digits BCD) Valid PD set No. (2 digits Hex)	 00: Not A.T. 01: A.T. 01 to 08
+5	1st unit Wait (2 digits BCD) Operation mode (2 digits BCD)	 00: Not waiting 01: Waiting 02: Wait alarm output 00: Setting level 1 (without technical mode) 01: Setting level 1 (with technical mode) 02: Setting level 2 (without technical mode) 03: Setting level 2 (with technical mode)
	• • •	
+125 (max.)	25th unit Wait (2 digits BCD) Operation mode (2 digits BCD)	 00: Not waiting 01: Waiting 02: Wait alarm output 00: Setting level 1 (without technical mode) 01: Setting level 1 (with technical mode) 02: Setting level 2 (without technical mode) 03: Setting level 2 (with technical mode)

General-purpose Command (Sequence No. 280)

Sends the specified data and stores the received data in the specified words.

Send Data Word Allocation (2nd Operand of PMCR)

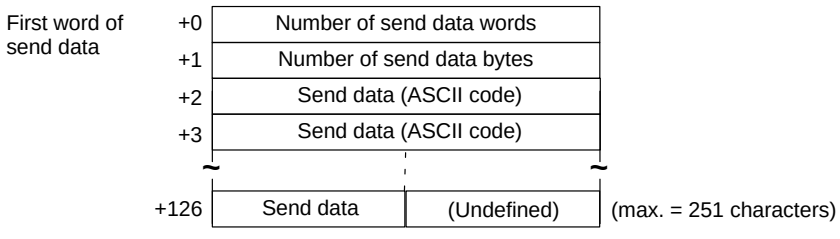

Offset	Contents (data format)	Data
+0	Number of send data words (4 digits BCD)	0001 to 0128
+1	Number of send data bytes	0001 to 0251 The number of send bytes not including @, the FCS, or the terminator.
+2	Send data (ASCII 2 characters)	Refer to the manual for the ES100□. Use ASCII (Up to 251 characters total.)
	• • •	
+127 (max.)	Send data (ASCII 1 characters)	

Receive Data Word Allocation (3rd Operand of PMCR)

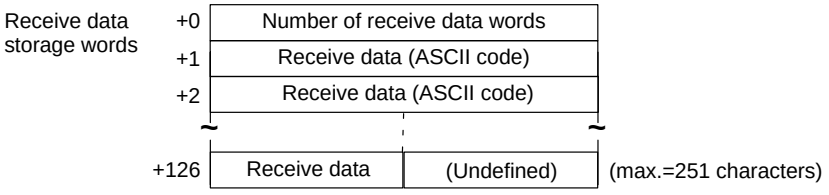

Offset	Contents (data format)	Data
+0	Number of receive data words (4 digits BCD)	0001 to 0127
+1	Receive data (ASCII 2 characters)	Refer to the manual for the ES100□. Returned as ASCII (Up to 251 characters total.)
	• • •	
+126 (max.)	Receive data (ASCII 1 characters)	

Note 1. At transmission, a header code “@” is attached before the data and the FCS and a terminator “*”CR are attached following the send data.

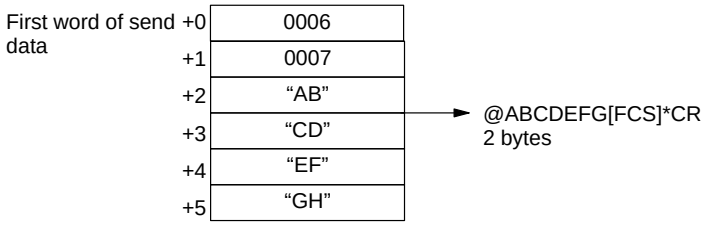

2. At reception, data excluding the header code “@” at the beginning of the receive data and the FCS and terminator “*”CR at the end of the data is stored in the receive data storage words.

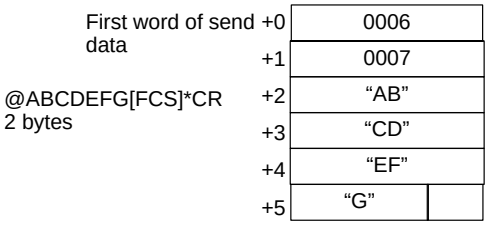

3. Refer to the manual for the ES100□ for the contents of send data and receive data.

Appendix G
K3T□ Intelligent Signal Processor Protocol

The K3T□ Intelligent Signal Processor Protocol is used to make various settings or control remotely the Intelligent Signal Processor connected to the Communications Board via RS-232C or RS-422A/485 cable.

Protocol Configuration

The configuration of the K3T□ Intelligent Signal Processor Protocol is shown as follows:

Sequence No.	Communications sequence name	Function	Ladder interface		Notes
			Send word allocation	Receive word allocation	
300	Reset (by unit number)	Performs the same processing as when an input is received on the reset terminal.	Yes	No	
301	Reset (continuous units)	Performs the same processing as when an input is received on the reset terminal.	Yes	No	
302	Write set value (by unit number)	Writes the set value HH, H, L, or LL.	Yes	No	See Note1
303	Write set value HH (continuous units)	Writes the set value HH.	Yes	No	See Note1
304	Write set value H (continuous units)	Writes the set value H.	Yes	No	See Note1
305	Write set value L (continuous units)	Writes the set value L.	Yes	No	See Note1
306	Write set value LL (continuous units)	Writes the set value LL.	Yes	No	See Note1
307	Write set value with bank (by unit number)	Writes the set value to a bank which is not in use (K3TR: HH to LL, K3TC: O1 to O5).	Yes	No	See Note2
308	Write set value HH with bank (continuous units)	Writes the set value HH to a bank which is not in use.	Yes	No	See Note1
309	Write set value H with bank (continuous units)	Writes the set value H to a bank which is not in use.	Yes	No	See Note1
310	Write set value L with bank (continuous units)	Writes the set value L to a bank which is not in use.	Yes	No	See Note1
311	Write set value LL with bank (continuous units)	Writes the set value LL to a bank which is not in use.	Yes	No	See Note1
312	Write set value O5 with bank (continuous units)	Writes the set value O5 to a bank which is not in use.	Yes	No	See Note1
313	Write set value O4 with bank (continuous units)	Writes the set value O4 to a bank which is not in use.	Yes	No	See Note1
314	Write set value O3 with bank (continuous units)	Writes the set value O3 to a bank which is not in use.	Yes	No	See Note1
315	Write set value O2 with bank (continuous units)	Writes the set value O2 to a bank which is not in use.	Yes	No	See Note1
316	Write set value O1 with bank (continuous units)	Writes the set value O1 to a bank which is not in use.	Yes	No	See Note1
317	Read set value (by unit number)	Reads the set value HH, H, L, or LL.	Yes	Yes	See Note1
318	Read set value HH (continuous units)	Reads the set value HH.	Yes	Yes	See Note1
319	Read set value H (continuous units)	Reads the set value H.	Yes	Yes	See Note1

Sequence No.	Communications sequence name	Function	Ladder interface		Notes
			Send word allocation	Receive word allocation	
320	Read set value L (continuous units)	Reads the set value L.	Yes	Yes	See Note1
321	Read set value LL (continuous units)	Reads the set value LL.	Yes	Yes	See Note1
322	Read set value with bank (by unit number)	Reads set value of a bank which is not in use (K3TR: HH to LL, K3TC: O1 to O5).	Yes	Yes	See Note2
323	Read set value HH with bank (continuous units)	Reads the set value HH of a bank which is not in use.	Yes	Yes	See Note1
324	Read set value H with bank (continuous units)	Reads the set value H of a bank which is not in use.	Yes	Yes	See Note1
325	Read set value L with bank (continuous units)	Reads the set value L of a bank which is not in use.	Yes	Yes	See Note1
326	Read set value LL with bank (continuous units)	Reads the set value LL of a bank which is not in use.	Yes	Yes	See Note1
327	Read set value O5 with bank (continuous units)	Reads the set value O5 of a bank which is not in use.	Yes	Yes	See Note1
328	Read set value O4 with bank (continuous units)	Reads the set value O4 of a bank which is not in use.	Yes	Yes	See Note1
329	Read set value O3 with bank (continuous units)	Reads the set value O3 of a bank which is not in use.	Yes	Yes	See Note1
330	Read set value O2 with bank (continuous units)	Reads the set value O2 of a bank which is not in use.	Yes	Yes	See Note1
331	Read set value O1 with bank (continuous units)	Reads the set value O1 of a bank which is not in use.	Yes	Yes	See Note1
332	Read holding data (by unit number)	Reads the peak/bottom data (maximum, minimum).	Yes	Yes	See Note3
333	Read holding data PH (continuous units)	Reads the peak data (maximum).	Yes	Yes	See Note3
334	Read holding data BH (continuous units)	Reads the bottom data (minimum).	Yes	Yes	See Note3
335	Read display value (PV) (by unit number)	Reads the display value (PV).	Yes	Yes	
336	Read display value (PV) (continuous units)	Reads the display value (PV).	Yes	Yes	
337	Read model (by unit number)	Reads the model data.	Yes	Yes	
338	Read model (continuous units)	Reads the model data.	Yes	Yes	
339	General-purpose command	Send specified data or receives specified data and writes it to the receive data words.	Yes	Yes	

Note 1. Special specifications are required to use communications + comparison output.

2. Special specifications are required to use communications + comparison output for the K3TR and K3TC. The operands HH, H, L, and LL are for the K3TR, and the operands O5, O4, O3, O2, and O1 are for the K3TC.

3. Not available for the K3TC.

4. **Ladder Interface Settings**
   YES: User settings are required for the 2nd and 3rd operands of PMCR.
   NO: Send word allocation: Set a dummy word address for the 3rd operand (D).
   Receive word allocation: Set the constant 0000 for the 2rd operand (S).

Connections

The connections used for the K3T□ Intelligent Signal Processor Protocol are shown below.

RS-232C Connections

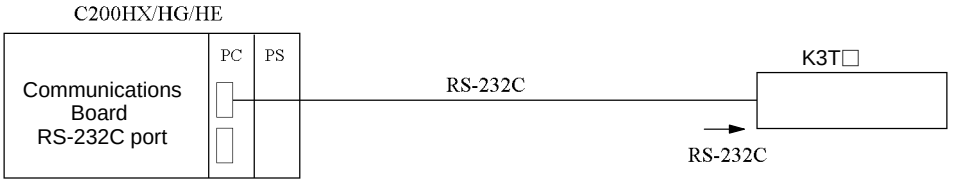

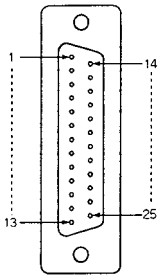

Signal name	Abbreviation	Signal direction	Pin No.
Protective ground or earth	FG	–	1
Signal ground or common return line	SG	–	7
Send data	SD	Output	2
Receive data	RD	Input	3
Request to send	RS	Output	4
Clear to send	CS	Input	5
Data set ready	DR	Input	6
Data terminal ready	ER	Output	20

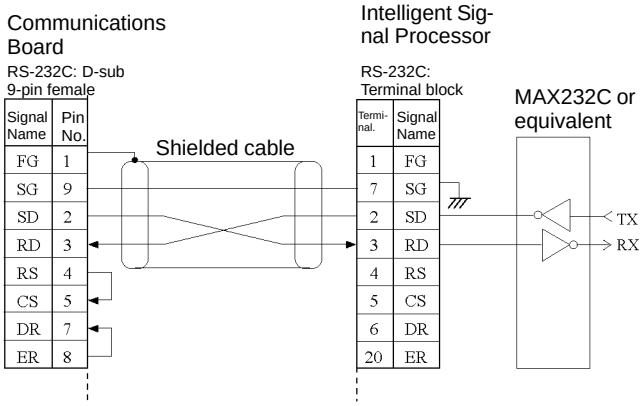

Note 1. The connection configuration is a one-to-one configuration and the maximum cable length is 15 m.
2. Use shielded twisted-pair cable (AWG28i or greater).

RS-422A/485 Connections

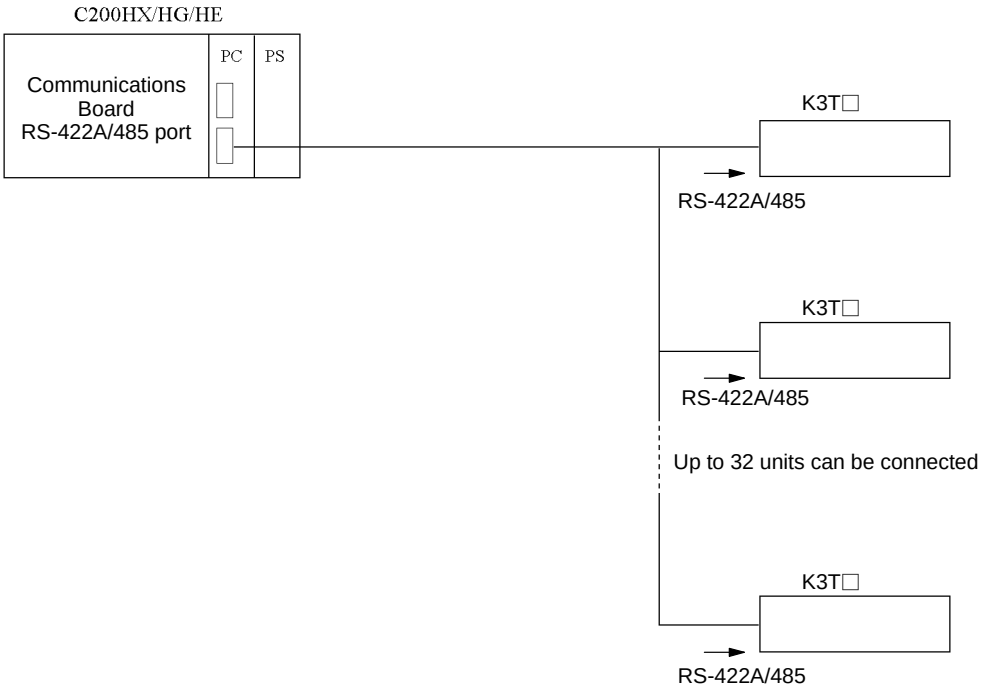

- **RS-422A**

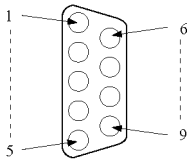

Signal name	Abbreviation	Signal direction	Pin No.
Send data A	SDA	Output	9
Send data B	SDB	Output	5
Receive data A	RDA	Output	6
Receive data B	RDB	Input	1
Signal ground	SG	–	3
Protective ground	FG	–	7

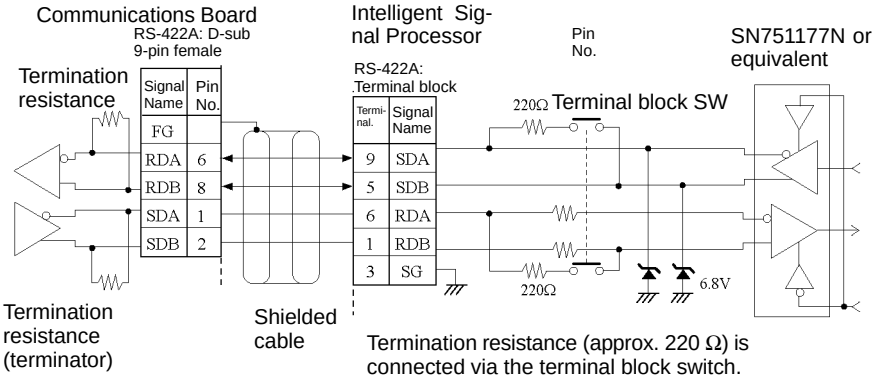

- **RS-485**

Signal name	Abbreviation	Signal direction	Terminal
Inverting output	–	Input or output	19
Non-inverting output	+	Input or output	18

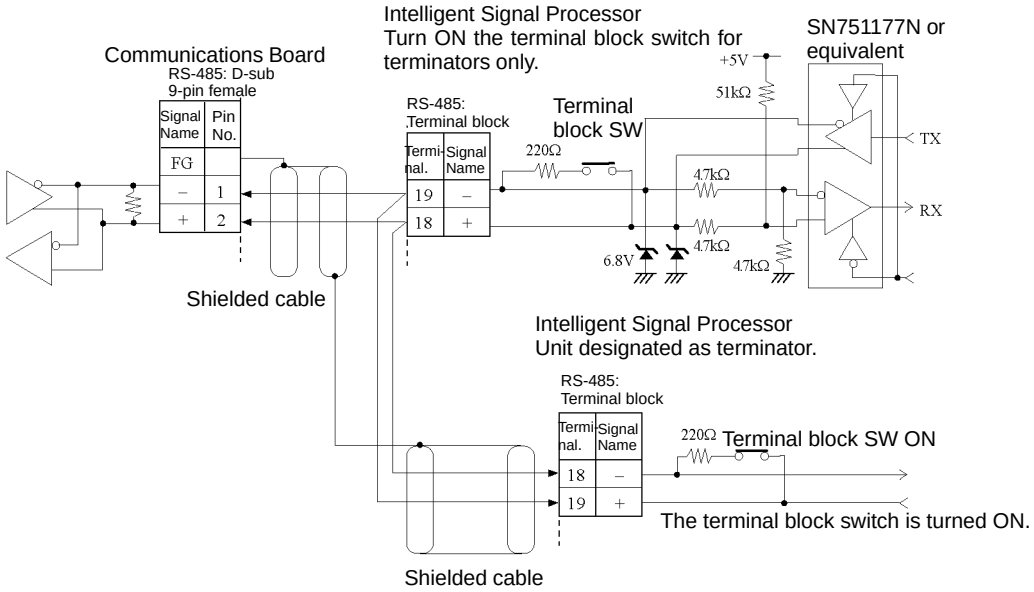

Note 1. The connection configuration is a one-to-one or a 1-to-N configuration. For 1-to-N connections, up to 32 units can be connected. (With 2-wire communications, this figure includes the Communications Board whereas with 4-wire communications it does not.)

2. The maximum cable length is 500 m. Use shielded twisted-pair cables (AWG28i or greater).
3. Connect termination resistance at both ends of the transmission path.
4. Turn the terminal block switch ON at the terminators.
5. Turn the terminal block switches OFF for units that are not terminators.

Reset (by Unit Number) (Sequence No. 300)

This sequence performs the same processing as when an input is received on the reset terminal.

Send Data Word Allocation (2nd Operand of PMCR)

First word of send data	+0	Number of send data words	
	+1	(Undefined)	Number of units
	+2	(Undefined)	Relevant unit No.
	~		~
	+33	(Undefined)	Relevant unit No.

Offset	Contents (data format)	Data
+0	Number of send data words (4 digits BCD)	0003 to 0034
+1	Number of units (2 digits BCD)	01 to 32
+2	Relevant unit No. (2 digits BCD)	00 to 99
	• • •	
+33	Relevant unit No. (2 digits BCD)	00 to 99

Receive Data Word Allocation (3rd Operand of PMCR)

None.

Reset Control (Continuous Units) (Sequence No. 301)

This sequence performs reset control for continuous units.

Send Data Word Allocation (2nd Operand of PMCR)

First word of send data	+0	Number of send data words	
	+1	(Undefined)	Number of units

Offset	Contents (data format)	Data
+0	Number of send data words (4 digits BCD)	0002
+1	Number of units (2 digits BCD)	01 to 32

Receive Data Word Allocation (3rd Operand of PMCR)

None.

Write Set Value (by Unit Number) (Sequence No. 302)

This sequence writes each set value (HH, H, L, LL).

Send Data Word Allocation (2nd Operand of PMCR)

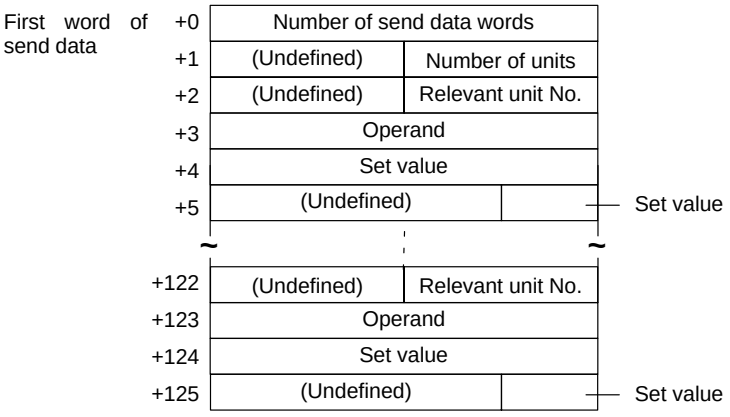

Offset	Contents (data format)	Data
+0	Number of send data words (4 digits BCD)	0006 to 0126
+1	Number of units (2 digits BCD)	01 to 31
+2	Relevant unit No. (2 digits BCD)	00 to 99
+3	Operand (ASCII 2 characters)	4848 (“HH”), 4C4C (“LL”) 4820 (“H”), 4C20 (“L”)
+4 to +5	Set value (5 digits BCD)	00000 to 99999 Negative sign: F (5th BCD digit) **Example** 12345: +4 2345, +5 0001 **Example** –1234: +4 1234, +5 000F
	• • •	
+124 to +125	Set value (5 digits BCD)	Same as above

Receive Data Word Allocation (3rd Operand of PMCR)

None.

Write Set Value HH (Continuous Units) (Sequence No. 303)

This sequence writes set value HH for continuous units.

Send Data Word Allocation (2nd Operand of PMCR)

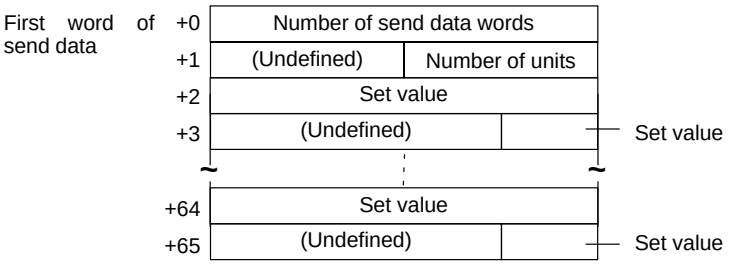

Offset	Contents (data format)	Data
+0	Number of send data words (4 digits BCD)	0004 to 0066
+1	Number of units (2 digits BCD)	01 to 32
+2 to +3	Set value (5 digits BCD)	00000 to 99999 Negative sign: F (5th BCD digit) **Example** 12345: +2 [2345], +3 [0001] **Example** –1234: +2 [1234], +3 [000F]
	• • •	
+64 to +65	Set value (5 digits BCD)	Same as above

Receive Data Word Allocation (3rd Operand of PMCR)

None.

Write Set Value H (Continuous Units) (Sequence No. 304)

This sequence writes set value H for continuous units. The word allocation is identical to that of sequence No. 303 (Write Set Value HH (Continuous Units)).

Write Set Value L (Continuous Units) (Sequence No. 305)

This sequence writes set value L for continuous units. The word allocation is identical to that of sequence No. 303 (Write Set Value HH (Continuous Units)).

Write Set Value LL (Continuous Units) (Sequence No. 306)

This sequence writes set value LL for continuous units. The word allocation is identical to that of sequence No. 303 (Write Set Value HH (Continuous Units)).

Write Set Value with Bank (by Unit Number) (Sequence No. 307)

This sequence writes set value of a bank which is not in use (K3TR: HH to LL, K3TC:O1 to O5).

Send Data Word Allocation (2nd Operand of PMCR)

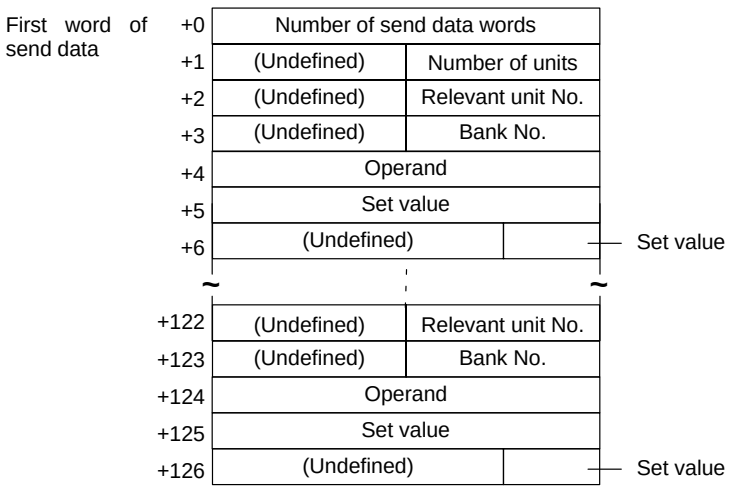

Offset	Contents (data format)	Data
+0	Number of send data words (4 digits BCD)	0007 to 0127
+1	Number of units (2 digits BCD)	01 to 25
+2	Relevant unit No. (2 digits BCD)	00 to 99
+3	Bank No. (2 digits BCD)	01 to 04
+4	Operand (Two ASCII characters)	4848 (“HH”), 4F31 (“O1”) 4820 (“H ”), 4F32 (“O2”) 4C20 (“L ”), 4F33 (“O3”) 4C4C (“LL”), 4F34 (“O4”) 4F35 (“O5”)
+5 to +6	Set value (5 digits BCD)	00000 to 99999 Negative sign: F (5th BCD digit) **Example** 12345: +5 = 2345, +6 = 0001 **Example** –1234: +5 = 1234, +6 = 000F
	• • •	
+125 to +126	Set value (5 digits BCD)	Same as above

Receive Data Word Allocation (3rd Operand of PMCR)

None.

Write Set Value HH with Bank (Continuous Units) (Sequence No. 308)

This sequence writes set value HH of a bank not in use for continuous units.

Send Data Word Allocation (2nd Operand of PMCR)

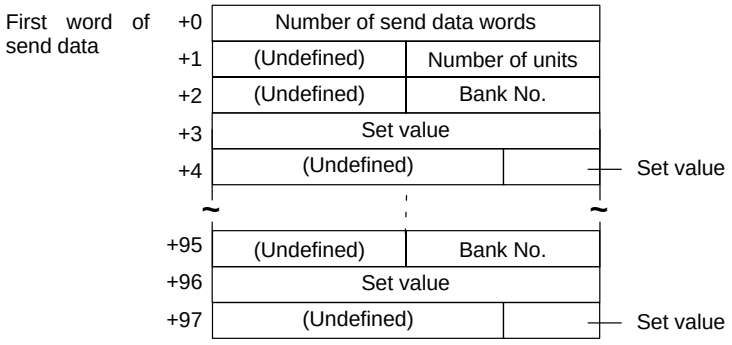

Offset	Contents (data format)	Data
+0	Number of send data words (4 digits BCD)	0004 to 0098
+1	Number of units (2 digits BCD)	01 to 32
+2	Bank No. (2 digits BCD)	01 to 04
+3 to +4	Set value (5 digits BCD)	00000 to 99999 Negative sign: F (5th BCD digit) **Example** 12345: +2 [2345], +3 [0001] **Example** –1234: +2 [1234], +3 [000F]
	• • •	
+96 to +97	Set value (5 digits BCD)	Same as above

Receive Data Word Allocation (3rd Operand of PMCR)

None.

Write Set Value H with Bank (Continuous Units) (Sequence No. 309)

This sequence writes set value H of a bank not in use for continuous units. The word allocation is identical to that of sequence No. 308 (Write Set Value HH with Bank (Continuous Units)).

Write Set Value L with Bank (Continuous Units) (Sequence No. 310)

This sequence writes set value L of a bank not in use for continuous units. The word allocation is identical to that of sequence No. 308 (Write Set Value HH with Bank (Continuous Units)).

Write Set Value LL with Bank (Continuous Units) (Sequence No. 311)

This sequence writes set value LL of a bank not in use for continuous units. The word allocation is identical to that of sequence No. 308 (Write Set Value HH with Bank (Continuous Units)).

Write Set Value O5 with Bank (Continuous Units) (Sequence No. 312)

This sequence writes set value O5 of a bank not in use for continuous units. The word allocation is identical to that of sequence No. 308 (Write Set Value HH with Bank (Continuous Units)).

Write Set Value O4 with Bank (Continuous Units) (Sequence No. 313)

This sequence writes set value O4 of a bank not in use for continuous units. The word allocation is identical to that of sequence No. 308 (Write Set Value HH with Bank (Continuous Units)).

Write Set Value O3 with Bank (Continuous Units) (Sequence No. 314)

This sequence writes set value O3 of a bank not in use for continuous units. The word allocation is identical to that of sequence No. 308 (Write Set Value HH with Bank (Continuous Units)).

Write Set Value O2 with Bank (Continuous Units) (Sequence No. 315)

This sequence writes set value O2 of a bank not in use for continuous units. The word allocation is identical to that of sequence No. 308 (Write Set Value HH with Bank (Continuous Units)).

Write Set Value O1 with Bank (Continuous Units) (Sequence No. 316)

This sequence writes set value O1 of a bank not in use for continuous units. The word allocation is identical to that of sequence No. 308 (Write Set Value HH with Bank (Continuous Units)).

Read Set Value (by Unit Number) (Sequence No. 317)

Reads set value HH, H, L, or LL.

Send Data Word Allocation (2nd Operand of PMCR)

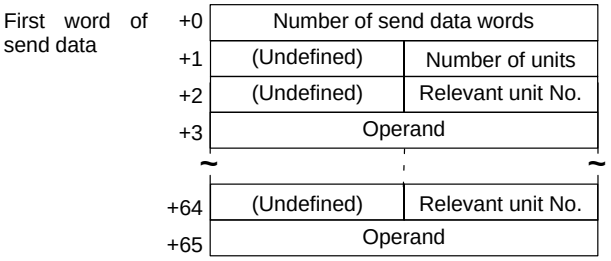

Offset	Contents (data format)	Data
+0	Number of send data words (4 digits BCD)	0004 to 0066
+1	Number of units (2 digits BCD)	01 to 32
+2	Relevant unit No. (2 digits BCD)	00 to 99
+3	Operand (ASCII 2 characters)	4848 (“HH”), 4C4C (“LL”) 4F31 (“01”) 4820 (“H”), 4C20 (“L”) 4F35 (“05”)
	• • •	
+64 to +65	Operand (ASCII 2 characters)	Same as above

Receive Data Word Allocation (3rd Operand of PMCR))

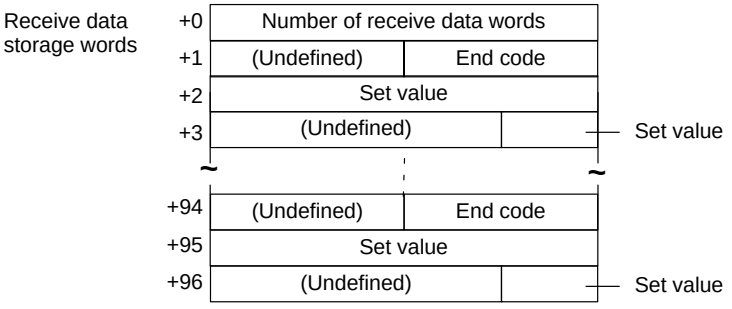

Offset	Contents (data format)	Data
+0	Number of receive data words (4 digits BCD)	0004 to 0097
+1	End code (2 digits Hex)	00 to 22
+2 to +3	Set value (5 digits BCD)	00000 to 99999 Negative sign: F (5th BCD digit) **Example** 12345: +2 2345, +3 0001 **Example** –1234: +2 1234, +3 000F
	• • •	
+95 to +96	Set value (5 digits BCD)	Same as above

Read Set Value HH (Continuous Units) (Sequence No. 318)

This sequence reads set value HH for continuous units.

Send Data Word Allocation (2nd Operand of PMCR)

First word of send data	+0	Number of send data words	
	+1	(Undefined)	Number of units

Offset	Contents (data format)	Data
+0	Number of send data words (4 digits BCD)	0002
+1	Number of units (2 digits BCD)	01 to 32

Receive Data Word Allocation (3rd Operand of PMCR)

This sequence is similar to sequence No. 317 (Read Set Value (by Unit Number)).

Read Set Value H (Continuous Units) (Sequence No. 319)

This sequence reads set value H for continuous units. The word allocation is identical to that of sequence No. 318 (Read Set Value HH (Continuous Units)).

Read Set Value L (Continuous Units) (Sequence No. 320)

This sequence reads set value L for continuous units. The word allocation is identical to that of sequence No. 318 (Read Set Value HH (Continuous Units)).

Read Set Value LL (Continuous Units) (Sequence No. 321)

This sequence reads set value LL for continuous units. The word allocation is identical to that of sequence No. 318 (Read Set Value HH (Continuous Units)).

Read Set Value with Bank (by Unit Number) (Sequence No. 322)

Reads the set value of a bank which is not in use (K3TR: HH to LL, K3TC:01 to 05) and stores the results in the specified words.

Send Data Word Allocation (2nd Operand of PMCR)

First word of send data

+0	Number of send data words	
+1	(Undefined)	Number of units
+2	(Undefined)	Relevant unit No.
+3	(Undefined)	Bank No.
+4	Operand	
~	~	~
+95	(Undefined)	Relevant unit No.
+96	(Undefined)	Bank No.
+97	Operand	

Offset	Contents (data format)	Data
+0	Number of send data words (4 digits BCD)	0005 to 0098
+1	Number of units (2 digits BCD)	01 to 32
+2	Relevant unit No. (2 digits BCD)	00 to 99
+3	Bank No. (2 digits BCD)	01 to 04
+4	Operand (ASCII 2 characters)	4848 (“HH”), 4820 (“H ”), 4C20 (“L ”), 4C4C (“LL”), 4F31 (“O1”) 4F32 (“O2”) 4F33 (“O3”) 4F34 (“O4”) 4F35 (“O5”)
	• • •	
+ 97	Operand (ASCII 2 characters)	Same as above

Receive Data Word Allocation (3rd Operand of PMCR)

Receive data storage words

+0	Number of receive data words		
+1	Set value		
+2	(Undefined)		Set value
~	~		~
+63	Set value		
+64	(Undefined)		Set value

Offset	Contents (data format)	Data
+0	Number of receive data words (4 digits BCD)	0003 to 0065
+1 to +2	Set value (5 digits BCD)	00000 to 99999 Negative sign: F (5th BCD digit) **Example** 12345: +1 2345, +2 0001 **Example** –1234: +1 1234, +2 000F
	• • •	
+63 to +64	Set value (5 digits BCD)	Same as above

Read Set Value HH with Bank (Continuous Units) (Sequence No. 323)

This sequence reads set value HH of a bank not in use for continuous units.

Send Data Word Allocation (2nd Operand of PMCR)

First word of send data	+0	Number of send data words	
	+1	(Undefined)	Number of units
	+2	(Undefined)	Bank No.
	~		~
	+33	(Undefined)	Bank No.

Offset	Contents (data format)	Data
+0	Number of send data words (4 digits BCD)	0003 to 0034
+1	Number of units (2 digits BCD)	01 to 32
+2	Bank No. (2 digits BCD)	01 to 04
	• • •	
+ 33	Bank No. (2 digits BCD)	Same as above

Receive Data Word Allocation (3rd Operand of PMCR)

The word allocation is similar to sequence No. 322 (Read Set Value with Bank (by Unit Number)).

Read Set Value H with Bank (Continuous Units) (Sequence No. 324)

This sequence reads set value H of a bank not in use for continuous units. The word allocation is identical to that of sequence No. 323 (Read Set Value HH with Bank (Continuous Units)).

Read Set Value L with Bank (Continuous Units) (Sequence No. 325)

This sequence reads set value L of a bank not in use for continuous units. The word allocation is identical to that of sequence No. 323 (Read Set Value HH with Bank (Continuous Units)).

Read Set Value LL with Bank (Continuous Units) (Sequence No. 326)

This sequence reads set value LL of a bank not in use for continuous units. The word allocation is identical to that of sequence No. 323 (Read Set Value HH with Bank (Continuous Units)).

Read Set Value O5 with Bank (Continuous Units) (Sequence No. 327)

This sequence reads set value O5 of a bank not in use for continuous units. The word allocation is identical to that of sequence No. 323 (Read Set Value HH with Bank (Continuous Units)).

Read Set Value O4 with Bank (Continuous Units) (Sequence No. 328)

This sequence reads set value O4 of a bank not in use for continuous units. The word allocation is identical to that of sequence No. 323 (Read Set Value HH with Bank (Continuous Units)).

Read Set Value O3 with Bank (Continuous Units) (Sequence No. 329)

This sequence reads set value O3 of a bank not in use for continuous units. The word allocation is identical to that of sequence No. 323 (Read Set Value HH with Bank (Continuous Units)).

Read Set Value O2 with Bank (Continuous Units) (Sequence No. 330)

This sequence reads set value O2 of a bank not in use for continuous units. The word allocation is identical to that of sequence No. 323 (Read Set Value HH with Bank (Continuous Units)).

Read Set Value O1 with Bank (Continuous Units) (Sequence No. 331)

This sequence reads set value O1 of a bank not in use for continuous units. The word allocation is identical to that of sequence No. 323 (Read Set Value HH with Bank (Continuous Units)).

Read Holding Data (Sequence No. 332)

Reads the peak/bottom data (maximum, minimum) and stores the results in the specified words.

Send Data Word Allocation (2nd Operand of PMCR)

First word of send data			
	+0	Number of send data words	
	+1	(Undefined)	Number of units
	+2	(Undefined)	Relevant unit No.
	+3	Operand	
	~		~
	+64	(Undefined)	Relevant unit No.
	+65	Operand	

Offset	Contents (data format)	Data
+0	Number of send data words (4 digits BCD)	0004 to 0066
+1	Number of units (2 digits BCD)	01 to 32
+2	Relevant unit No. (2 digits BCD)	00 to 99
+3	Operand (ASCII 2 characters)	5048 (“PH”) 4248 (“BH”)
	• • •	
+65	Operand (ASCII 2 characters)	Same as above

Receive Data Word Allocation (3rd Operand of PMCR)

Receive data storage words

+0	Number of receive data words		
+1	Peak/bottom data		
+2	(Undefined)		Peak/bottom data
+3	(Undefined)	Status	
~			~
+94	Peak/bottom data		
+95	(Undefined)		Peak/bottom data
+96	(Undefined)	Status	

Offset	Contents (data format)	Data
+0	Number of receive data words (4 digits BCD)	0004 to 0097
+1 to +2	Peak/bottom data (5 digits BCD)	00000 to 99999 Negative sign: F (5th BCD digit) **Example** 12345: +1 2345, +2 0001 **Example** –1234: +1 1234, +2 000F
+3	Status (2 digits Hex)	d0 bit: If overflow: 1 Others: 0
		d1 bit: If underflow: 1 Others: 0
		d2 bit: Not used
		d3 bit: During forced zero operation: 1 Others: 0 (K3TH,K3TR: 0)
		d4 bit: Not used
		d5 bit: During hold input: 1 Others: 0
		d6 bit: Bank input 1: 1 Others: 0 (K3TH, K3TX: 0)
		d7 bit: Bank input 2: 1 Others: 0 (K3TH, K3TX: 0)
	• • •	
+96	Status	Same as above

Read Holding Data PH (Continuous Units) (Sequence No. 333)

This sequence reads peak holding data for continuous units.

Send Data Word Allocation (2nd Operand of PMCR)

First word of send data

+0	Number of send data words	
+1	(Undefined)	Number of units

Offset	Contents (data format)	Data
+0	Number of send data words (4 digits BCD)	0002
+1	Number of units (2 digits BCD)	01 to 32

Receive Data Word Allocation (3rd Operand of PMCR)

The data allocation is similar to sequence No. 332 (Read Holding Data (by Unit Number)).

Read Holding Data BH (Continuous Units) (Sequence No. 334)

This sequence reads bottom holding data for continuous units. The word allocation is identical to that of sequence No. 333 (Read Holding Data PH (Continuous Units)).

Read Display Value (PV) (by Unit Number) (Sequence No. 335)

Reads the display value (PV) and stores the results in the specified words.

Send Data Word Allocation (2nd Operand of PMCR)

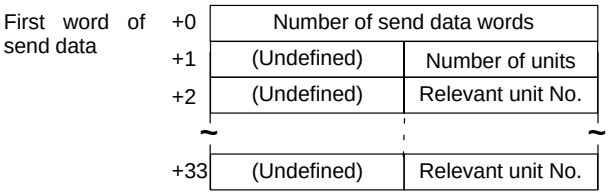

Offset	Contents (data format)	Data
+0	Number of send data words (4 digits BCD)	0003 to 0034
+1	Number of units (2 digits BCD)	01 to 32
+2	Relevant unit No. (2 digits BCD)	00 to 99
	• • •	
+ 33	Relevant unit No. (2 digits BCD)	00 to 99

Receive Data Word Allocation (3rd Operand of PMCR)

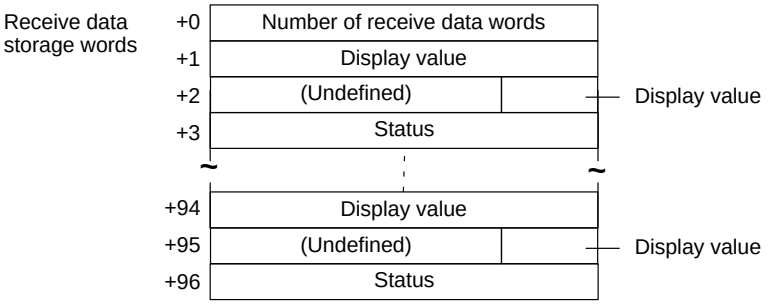

Offset	Contents (data format)	Data
+0	Number of receive data words (4 digits BCD)	0004 to 0097
+1 to +2	Display value (5 digits BCD)	00000 to 99999 Negative sign: F (5th BCD digit) **Example** 12345: +1 2345, +2 0001 **Example** –1234: +1 1234, +2 000F
+3	Status (4 digits Hex)	d0 bit: If overflow: 1 Others: 0
		d1 bit: If underflow: 1 Others: 0
		d2 bit: Not used
		d3 bit: During forced zero operation: 1 Others: 0 (K3TH, K3TR, K3TC: 0)
		d4 bit: In test mode: 1 Others: 0
		d5 bit: While holding input: 1 Others: 0
		d6 bit: Bank input 1: 1 Others: 0 (K3TH, K3TX: 0)
		d7 bit: Bank input 2: 1 Others: 0 (K3TH, K3TX: 0)
		d8 bit: LL comparison output: 1 Others: 0 OUT1 comparison output: 1 (K3TC)
		d9 bit: L comparison output: 1 Others: 0 OUT2 comparison output: 1 (K3TC)
		d10 bit: H comparison output: 1 Others: 0 OUT4 comparison output: 1 (K3TC)
		d11 bit: HH comparison output: 1 Others: 0 OUT5 comparison output: 1 (K3TC)
		d12 bit: PASS comparison output: 1 Others: 0 OUT3 comparison output: 1 (K3TC)
		d13 bit: Not used d14 bit: Not used d15 bit: Not used
	• • •	
+96	Status (4 digits BIN)	Same as above

Read Display Value (PV) (Continuous Units) (Sequence No. 336)

This sequence reads display value (PV) for continuous units.

Send Data Word Allocation (2nd Operand of PMCR)

First word of send data	+0	Number of send data words	
	+1	(Undefined)	Number of units

Offset	Contents (data format)	Data
+0	Number of send data words (4 digits BCD)	0002
+1	Number of units (2 digits BCD)	01 to 32

Receive Data Word Allocation (3rd Operand of PMCR)

This sequence is similar to sequence No. 335 (Read Display Value (PV) (Continuous Units)).

Model Data Read (by Unit Number) (Sequence No. 337)

Reads model data and stores the results in the specified words.

Send Data Word Allocation (2nd Operand of PMCR)

First word of send data	+0	Number of send data words	
	+1	(Undefined)	Number of units
	+2	(Undefined)	Relevant unit No.
	~		~
	+26	(Undefined)	Relevant unit No.

Offset	Contents (data format)	Data
+0	Number of send data words (4 digits BCD)	0003 to 0027
+1	Number of units (2 digits BCD)	01 to 25
+2	Relevant unit No. (2 digits BCD)	00 to 99
	• • •	
+ 26	Relevant unit No. (2 digits BCD)	Same as above

Note The number of Units can be up to 25 maximum.

Receive Data Word Allocation (3rd Operand of PMCR)

Receive data storage words	+0	Number of receive data words	
	+1	Input specifications	
	+2	Input specifications	Display specifications
	+3	Output specifications	
	+4	Input contents	
	+5	Operation mode	
	~		~
	+121	Input specifications	
	+122	Input specifications	Display specifications
	+123	Output specifications	
	+124	Input contents	
	+125	Operation mode	

Offset	Contents (data format)	Data
+0	Number of receive data words (4 digits BCD)	0006 to 0126
+1 to + 2	Input specifications (ASCII 3 characters)	544131 (“TA1”) (K3TH) 544231 (“TB1”) (K3TH) 564432 (“VD2”) (K3TX) 414432 (“AD2”) (K3TX) 564132 (“VA2”) (K3TX) 414132 (“AA2”) (K3TX) 524231 (“RB1”) (K3TR, K3TC)
+2	Display specifications (ASCII 1 character)	41 (“A”) (common) 42 (“B”) (K3TH, K3TX) 43 (“C”) (K3TR, K3TC)
+3	Output specifications (ASCII 2 characters)	5331 (“S1”) (RS-232C) 5332 (“S2”) (RS-485) 5333 (“S3”) (RS-422A) 5335 (“S5”) (RS-485 + comparison output) 5336 (“S6”) (RS-422A + comparison output)
+4	Input contents (ASCII 2 characters)	Leftmost digit: 30 (“0”) to 31 (“1”)
		Rightmost digit: 31 (“1”) to 45 (“E”)
+5	Operation mode (ASCII 2 characters)	3030 (“00”) (K3TH, K3TX) 3031 (“00”) to 3133 (“12”) (K3TR) 5542 (“UB”) (K3TC) 5543 (“UC”) (K3TC)
	• • •	
+125	Operation mode (ASCII 2 characters)	Same as above

Model Data Read (Continuous Units) (Sequence No. 338)

This sequence reads model data for continuous units.

Send Data Word Allocation (2nd Operand of PMCR)

First word of send data	+0	Number of send data words	
	+1	(Undefined)	Number of units

Offset	Contents (data format)	Data
+0	Number of send data words (4 digits BCD)	0002
+1	Number of units (2 digits BCD)	01 to 25

Note The number of Units can be up to 25 maximum.

Receive Data Word Allocation (3rd Operand of PMCR)

The work allocation is similar to sequence No. 337 (Model Data Read (by Unit Number)).

General-purpose Command (Sequence No. 339)

Sends the specified data and writes the receive data to the receive data words. The characters such as “@”, FCS, terminators need not be set in the send and receive data words. These characters will be automatically added for transmission and automatically removed before saving data.

Send Data Word Allocation (2nd Operand of PMCR)

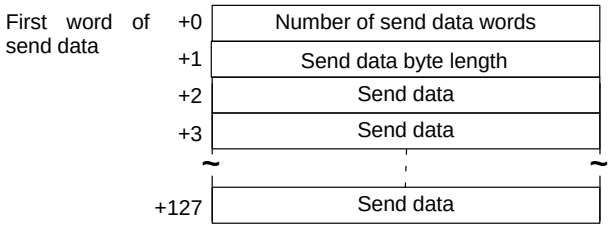

Offset	Contents (data format)	Data
+0	Number of send data words (4 digits BCD)	0003 to 0128
+1	Send data byte length (4 digits BCD)	0001 to 0251 Number of bytes of send data not including @, the FCS, and the terminator.
+2 to +127	Send data (ASCII)	ASCII code Send data: 251 characters max.

Receive Data Word Allocation (3rd Operand of PMCR)

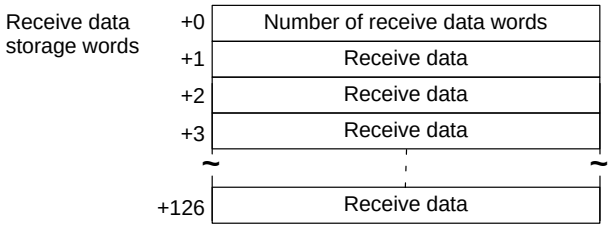

Offset	Contents (data format)	Data
+0	Number of receive data words (4 digits BCD)	0001 to 0127
+1 to +126	Receive data (ASCII)	ASCII code Receive data: 251 characters max.

Appendix H
V500/V520 Bar Code Reader Protocol

The V500/V520 Bar Code Reader Protocol is used to make various settings or control remotely the Bar Code Reader connected the Communications Board via RS-232C cable.

Protocol Configuration

The configuration of the V500/V520 Bar Code Reader Protocol is shown below.

Sequence No.	Communications sequence name	Function	Ladder interface	
			Send word allocation	Receive word allocation
350	BCR read start	Instructs the Reader to start a BCR read.	No	No
351	BCR read stop	Instructs the Reader to stop a BCR read.	No	No
352	Data read	Data read by the Reader is received and saved in the receive words.	No	Yes
353	Complete data read	Instructs the Reader to start a read. After the data read by the Reader is received and saved to the receive words, reading is stopped.	No	Yes
354	BCR function write (V500)	Writes the operation mode and read functions.	Yes	No
355	BCR function read (V500)	Reads the operation mode and read functions.	No	Yes
356	Log data output request (V500)	Requests output of log data sent to host.	Yes	Yes
357	Preset data set (V500)	Writes preset data.	Yes	No
358	BCR connection confirmation (V500)	Confirms if the Reader is correctly set.	No	No
359	Log data clear (V500)	Clear log data.	No	No
360	Continuous data read (scan) (V500)	Performs the following operations repeatedly: starts reading, receives data read by the Reader, saves the data to the receive words by the scan method.	No	Yes
361	Continuous data read (interrupt) (V500)	Performs the following operations repeatedly: starts reading, receives data read by the Reader, saves the data to the receive words by the interrupt method (interrupt No.100).	No	Yes
362	BCR initialize	Clears the log, confirms BCR connection, and sets BCRs.	Yes	No
363	Continuous data read (scan) (V520)	Performs the following operations repeatedly: starts reading, receives data read by the Reader, saves the data to the receive words by the scan method.	No	Yes
364	Continuous data read (interrupt) (V520)	Performing the following operations repeatedly: starts reading, receives data read by the Reader, saves the data to the receive words by the interrupt method (interrupt No.100).	No	Yes
365	General-purpose command 1	Used to send data of a specified data length, and receive only ACK as the receive data.	Yes	No
366	General-purpose command 2	Used to send data of a specified data length, and receive ACK together with the return of other receive data. The frame format of the receive data, however, has to contain STX and ETX.	Yes	Yes

Note Ladder Interface Settings

YES: User settings are required for the 2nd and 3rd operands of PMCR.

NO: Send word allocation: Set a dummy word address for the 3rd operand (D).
Receive word allocation: Set the constant 0000 for the 2rd operand (S).

Connections

The connections for using the V500/V520 Bar Code Reader Protocol are shown below.

V500 Connections

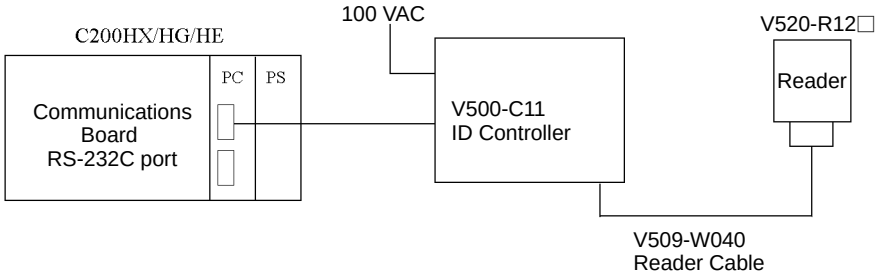

Communications Board:
D-sub 9 pin female

Signal Name	Pin No.
FG	1
SD	2
RD	3
RS	4
CS	5
DR	7
ER	8
SG	9

V500-C11:
D-sub 9 pin female

Pin No.	Signal Name
1	FG
2	SD
3	RD
4	RS
5	CS
7	DR
8	ER
9	SG

V520 Connections

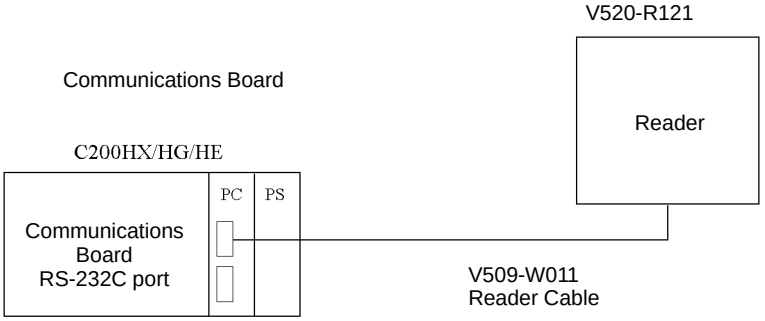

Communications Board:
D-sub 9 pin female

Signal Name	Pin No.
FG	1
SD	2
RD	3
RS	4
CS	5
DR	7
ER	8
SG	9

V520-R121:
D-sub 9 pin female

Pin No.	Signal Name
1	SD
2	RD
3	RS
4	CS
6	ER
7	SG

System Setting

Shown below are the system settings of the V500-C11 and V520-R121 when this protocol is used.

Note The portions enclosed by in boxes are used for this protocol.

V500-C11

- **BCR Functions**

Read trigger	“READ SIGNAL INPUT”, “ONLINE READ COMMAND”
Read control method	“SINGLE READ”, “CONTINUOUS READ”

- **Host Interface**

Prefix	NONE, “STX”
Suffix	“ETX”, “CR ”
Bar code output	“OUTPUT”, “NO OUTPUT”

V520-R121

Start code	NONE, “STX”
Stop code	“ETX”, “CR”
Operation mode	External trigger, host trigger
Data output mode	1-shot, continuous

BCR Read Start (Sequence No. 350)

This sequence instructs the Bar Code Reader to start reading.

Send Data Word Allocation (2nd Operand of PMCR)

None.

Receive Data Word Allocation (3rd Operand of PMCR)

None.

BCR Read Stop (Sequence No. 351)

This sequence instructs the Bar Code Reader to stop reading.

Send Data Word Allocation (2nd Operand of PMCR)

None.

Receive Data Word Allocation (3rd Operand of PMCR)

None.

Data Read (Sequence No. 352)

This sequence receives read data and saves it to the receive data storage words.

Send Data Word Allocation (2nd Operand of PMCR)

None.

Receive Data Word Allocation (3rd Operand of PMCR)

Receive data storage words		
	+0	Number of receive data words
	+1	Read data
	+2	Read data
	+3	Read data
	+4	Read data
	~	~
	+15	Read data
	+16	Read data

Offset	Contents (data format)	Data
+0	Number of receive data words (4 digits BCD)	0002 to 0017
+1 to +16	Read data (ASCII)	30 (‘0’) to 39 (‘9’), 41 (‘A’) to 5A (‘Z’), 3F (‘?’) Up to 32 characters in ASCII

Note The reception wait time is not set for this sequence.

Complete Data Read (Sequence No. 353)

This sequence instructs the Bar Code Reader to start reading, receives the data read by the Bar Code Reader, stores the data in the receive data storage words, and then instructs the Reader to stop reading.

Send Data Word Allocation (2nd Operand of PMCR)

None.

Receive Data Word Allocation (3rd Operand of PMCR)

It is similar to sequence No. 352 (Data read).

Note The reception wait time is not set for this sequence.

BCR Function Write (V500) (Sequence No. 354)

This sequence sets the operation mode and read functions in the Bar Code Reader.

Send Data Word Allocation (2nd Operand of PMCR)

First word of send data				
+0	Number of send data words			
+1	Operation mode	In-zone control		
+2	Types of bar code	(Undefined)		
+3	(Undefined)	Number of digits		
+4	Modulus check	(Undefined)		
+5	(Undefined)	Number of matches	Multistep labels	
+6	Buzzer	Horizontal control		

Offset	Contents (data format)	Data
+0	Number of send data words (4 digits BCD)	0007 (fixed)
+1	Operation mode (ASCII 1 character)	41 (‘A’) : ONLINE *42 (‘B’) : ONLINE CONTROL
	In-zone control (ASCII 1 character)	*41 (‘A’) : ON 42 (‘B’) : OFF
+2	Bar code type (ASCII 1 character)	41 (‘A’) : JAN 42 (‘B’) : NW7 NORMAL 43 (‘C’) : NW7 SMALL 44 (‘D’) : NW7 HEX 45 (‘E’) : CODE39 NORMAL 46 (‘F’) : CODE39 ST/SP OUTPUT 47 (‘G’) : 2 of 5 (ITF) 48 (‘H’) : CODE128 49 (‘I’) : CODE93 4A (‘J’) : 2 of 5 (3BAR) 4B (‘K’) : 2 of 5 (5BAR)
+3	Number of digits (2 digits BCD)	00 to 32 00: Any number of digits allowed.
+4	Modulus check (ASCII 1 character)	41 (‘A’) : No-check 42 (‘B’) : Modulus 10 (all bar codes) 43 (‘C’) : Modulus 11 (except JAN) 44 (‘D’) : Modulus 16 (NW7 only) 45 (‘E’) : Modulus 43 (CODE39 only) 46 (‘F’) : Modulus 47 (CODE93 only) 47 (‘G’) : Modulus 103 (CODE128 only)
+5	Number of matches (1 digit BCD)	1 to 5
	Multistep labels (1 digit BCD)	1 to 4
+6	Buzzer (ASCII 1 character)	41 (‘A’) : ON for normal read 42 (‘B’) : ON for no-read 43 (‘C’) : OFF
	Horizontal control mode (ASCII 1 character)	41 (‘A’) : Normal (continuous rotating) 42 (‘B’) : In-zone startup

Note Selecting the values marked with asterisks is required for this protocol.

Receive Data Word Allocation (3rd Operand of PMCR)

None.

BCR Function Read (V500) (Sequence No. 355)

This sequence reads the settings of functions in the Bar Code Reader.

Send Data Word Allocation (2nd Operand of PMCR)

None.

Receive Data Word Allocation (3rd Operand of PMCR)

Receive data storage words				
+0	Number of receive data words			
+1	Operation mode	In-zone control		
+2	Types of bar code	(Undefined)		
+3	(Undefined)	Number of digits		
+4	Modulus check	(Undefined)		
+5	(Undefined)	Number of matches.	Multistep labels.	
+6	Buzzer	Horizontal control		

Offset	Contents (data format)	Data
+0	Number of receive data words (4 digits BCD)	0007 (fixed)
+1	Operation mode (ASCII 1 character)	41 (‘A’) : ONLINE 42 (‘B’) : ONLINE CONTROL
	In-zone control (ASCII 1 character)	41 (‘A’) : ON 42 (‘B’) : OFF
+2	Bar code type (ASCII 1 character)	41 (‘A’) : JAN 42 (‘B’) : NW7 NORMAL 43 (‘C’) : NW7 SMALL 44 (‘D’) : NW7 HEX 45 (‘E’) : CODE39 NORMAL 46 (‘F’) : CODE39 ST/SP Output 47 (‘G’) : 2 of 5 (ITF) 48 (‘H’) : CODE128 49 (‘I’) : CODE93 4A (‘J’) : 2 of 5 (3BAR) 4B (‘K’) : 2 of 5 (5BAR)
+3	Number of digits (2 digits BCD)	00 to 32
+4	Modulus check (ASCII 1 character)	41 (‘A’) : No-check 42 (‘B’) : Modulus 10 (all bar codes) 43 (‘C’) : Modulus 11 (except JAN) 44 (‘D’) : Modulus 16 (NW7 only) 45 (‘E’) : Modulus 43 (CODE39 only) 46 (‘F’) : Modulus 47 (CODE93 only) 47 (‘G’) : Modulus 103 (CODE128 only)
+5	Number of matches (1 digit BCD)	1 to 5
	Multistep labels (1 digit BCD)	1 to 4
+6	Buzzer (ASCII 1 character)	41 (‘A’) : ON for normal read 42 (‘B’) : ON for no-read 43 (‘C’) : OFF
	Horizontal control mode (ASCII 1 character)	41 (‘A’) : Normal (continuous rotating) 42 (‘B’) : In-zone startup

Log Data Output Request (V500) (Sequence No. 356)

This sequence requests output of the log data sent to host.

Send Data Word Allocation (2nd Operand of PMCR)

First word of send data	+0	Number of send data words	
	+1	(Undefined)	Number of units

Offset	Contents (data format)	Data
+0	Number of send data words (4 digits BCD)	0002 (fixed)
+1	Number of units (2 digits BCD)	01 to 99

Receive Data Word Allocation (3rd Operand of PMCR)

Receive data storage words	+0	Number of receive data words
	+1	Log data
	+2	Log data
	~	~
	+125	Log data
	+126	Log data

Offset	Contents (data format)	Data
+0	Number of receive data words (4 digits BCD)	0001 to 0127
+1 to +126	Log data (ASCII)	Log data with the number of designated data is stored including the separator GS (1D). If the log data (including separator) exceeds 251 bytes, only 251 bytes are stored.

Note No retries are performed for this sequence.

Preset Data Set (V500) (Sequence No. 357)

This sequence sets preset data.

Send Data Word Allocation (2nd Operand of PMCR)

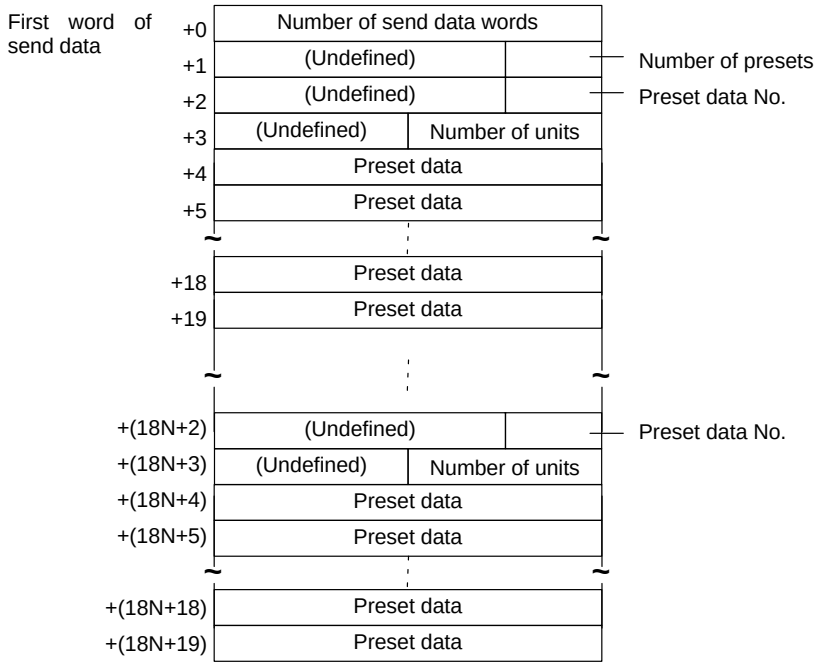

Offset	Contents (data format)	Data
+0	Number of send data words (4 digits BCD)	18N+2 (N is number of presets 1 to 5)
+1	Number of presets (1 digit BCD)	1 to 5
+2	Preset data No. (1 digit BCD)	1 to 5
+3	Data length (2 digits BCD)	01 to 32
+4 to +19	Preset data (ASCII)	Combination of the following ASCII characters and up to 32 characters maximum: 30 ('0') to 39 ('9') 41 ('A') to 5A ('Z'), 3F ('?') The area that is not used is undefined
+20 to +91		Store repeatedly the contents of words with offsets +2 to +19 the same number of times as the number of presets (N)

Receive Data Word Allocation (3rd Operand of PMCR)

None.

BCR Connection Confirmation (V500) (Sequence No. 358)

This sequence confirms whether the Bar Code Reader is connected correctly or not.

Send Data Word Allocation (2nd Operand of PMCR)

None.

Receive Data Word Allocation (3rd Operand of PMCR)

None.

Log Data Clear (V500) (Sequence No. 359)

This sequence clears the log data.

Send Data Word Allocation (2nd Operand of PMCR)
None.

Receive Data Word Allocation (3rd Operand of PMCR)
None.

Data Continuous Read (Scan) (V500) (Sequence No. 360)

This sequence performs the following operations repeatedly: Instructs the Bar Code Reader to start reading and receives the data read by the Bar Code Reader. The scan notification method is used for the receive data.

Send Data Word Allocation (2nd Operand of PMCR)
None.

Receive Data Word Allocation (3rd Operand of PMCR)
Receive data word allocation is similar to that of sequence No. 352 (Data read).

Note 1. Since this sequence repeats itself within the sequence, once it is executed, it remains in the execution state until cancelled.
2. Even if execution is cancelled, the Bar Code Reader still keeps reading. Execute sequence No. 351 (BCR read stop) to end the sequence.

Note The reception wait time is not set for this sequence.

Data Continuous Read (Interrupt) (V500) (Sequence No. 361)

This sequence performs the following operations repeatedly: Instruct the Bar Code Reader to start reading and receives the data read by the Bar Code Reader. The interrupt notification method is used for the receive data and the interrupt No. is 100.

Send Data Word Allocation (2nd Operand of PMCR)
None.

Receive Data Word Allocation (3rd Operand of PMCR)
The receive data word allocation similar to that of sequence No. 352 (data read).

Note 1. Since this sequence repeats itself within the sequence, once it is executed, it remains in the execution state until cancelled.
2. Even if execution is cancelled, the Bar Code Reader keeps reading. Execute sequence No. 351 (BCR read stop) to end the sequence.

Note The reception wait time is not set for this sequence.

BCR Initialize (V500) (Sequence No. 362)

This sequence clears the log data, confirms BCR connection and sets the BCR functions.

Send Data Word Allocation (2nd Operand of PMCR)
The send data word allocation is similar to that of sequence No. 354 (BCR Function Set).

Receive Data Word Allocation (3rd Operand of PMCR)
None.

Data Continuous Read (Scan) (V520) (Sequence No. 363)

This sequence performs the following operations repeatedly: instructs the Bar Code Reader to start reading and receives the data read by the Bar Code Reader. The scan notification method is used for the receive data.

Send Data Word Allocation (2nd Operand of PMCR)
None.

Receive Data Word Allocation (3rd Operand of PMCR)

The receive data word allocation is similar to that of sequence No. 352 (Data Read).

Note 1. Since this sequence repeats itself within the sequence, once it is executed, it remains in the execution state until cancelled.
2. Even if execution is cancelled, the bar code still keeps reading. Execute sequence No. 351 (BCR Read Stop) to end the sequence.
3. The reception wait time is not set for this sequence.

Data Continuous Read (Interrupt) (V520) (Sequence No. 364)

This sequence performs the following operations repeatedly: Instructs the Bar Code Reader to start reading and receives the data read by the Bar Code Reader. The interrupt notification method is used for the receive data and the interrupt No. is 100.

Send Data Word Allocation (2nd Operand of PMCR)

None.

Receive Data Word Allocation (3rd Operand of PMCR)

The send data word allocation is similar to that of sequence No. 352 (Data Read).

Note 1. Since this sequence repeats itself within the sequence, once it is executed, it remains in the execution state until cancelled.
2. Even if execution is cancelled, the bar code still keeps reading. Execute sequence No. 351 (BCR Read Stop) to end the sequence.
3. The reception wait time is not set for this sequence.

General-purpose Command 1 (Sequence No. 365)

This general-purpose command is used to send data with a specified data length, and receive back only ACK. STX and ETX are automatically attached to the send data.

Send Data Word Allocation (2nd Operand of PMCR)

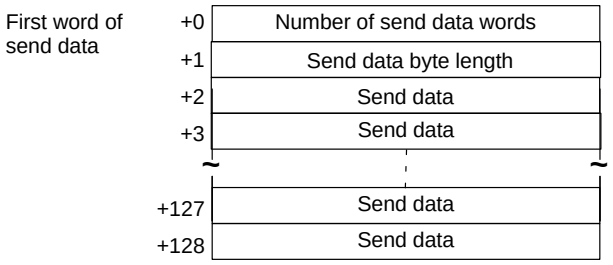

Offset	Contents (data format)	Data
+0	Number of send data words (4 digits BCD)	0003 to 0129
+1	Send data byte length (4 digits BCD)	0001 to 0254 The byte length of the send data excluding STX and ETX.
+2 to +128	Send data (ASCII)	Inscribe send data up to 254 bytes (max.) by ASCII.

Receive Data Word Allocation (3rd Operand of PMCR)

None.

General-purpose Command 2 (Sequence No. 366)

This general-purpose command is used to send data with a specified data length, and receive back ACK in addition to other receive data. The frame format of the receive data, however, has to contain STX and ETX. STX and ETX are automatically attached to the send data.

Send Data Word Allocation (2nd Operand of PMCR)

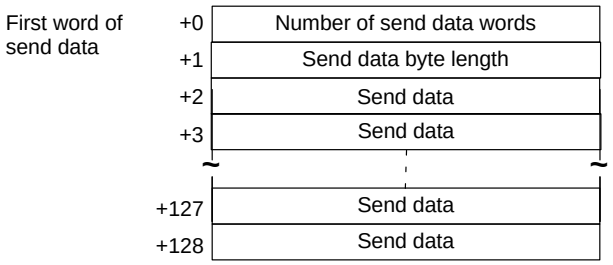

Offset	Contents (data format)	Data
+0	Number of send data words (4 digits BCD)	0003 to 0129
+1	Send data byte length (3 digits BCD)	1 to 254 The byte length of the send data excluding STX and ETX.
+2 to +128	Send data (ASCII)	Set send data up to 254 bytes (max.) by ASCII.

Receive Data Storage Word Allocation (3rd Operand of PMCR)

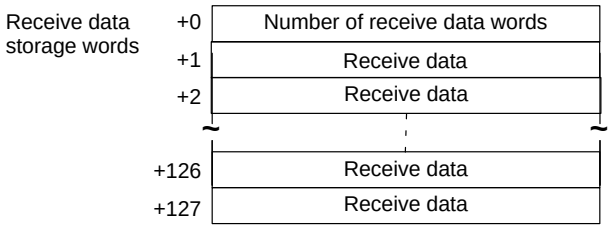

Offset	Contents (data format)	Data
+0	Number of receive data words (4 digits BCD)	0001 to 0128
+1 to +127	Receive data (ASCII)	If the receive data exceed 253 bytes, only 253 bytes are stored.

Note Shown below is the receive data frame format. The reception data without ACK, STX, and ETX is stored.

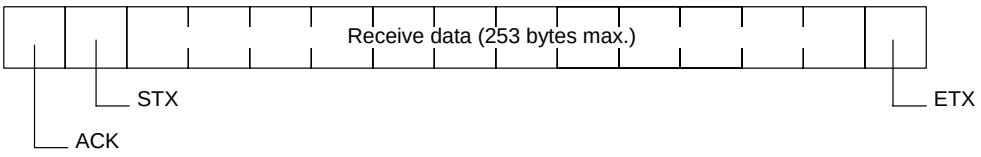

Appendix I
3Z4L Laser Micrometer Protocol

The 3Z4L Laser Micrometer Protocol is used to make various settings or control remotely the Laser Micrometer connected to the Communications Board via RS-232C cable.

Protocol Configuration

The configuration of the 3Z4L Laser Micrometer Protocol is shown below.

Sequence No.	Communications sequence name	Function	Ladder interface	
			Send word allocation	Receive word allocation
400	3Z4L clear	Resets errors, data, analog output, decision result and places the Laser Micrometer into standby.	No	No
401	Memory switch set	Sets memory switches and the area for the work position LED.	Yes	No
402	mm unit set	Sets the display unit to mm.	No	No
403	E unit set	Sets the display unit to E.	No	No
404	Calibration set	Calibrates the Laser Micrometer. Calibration setting release.	Yes	No
405	Calibration release	Releases the calibration of the Laser Micrometer.	No	No
406	Program number set (3000-series)	Switches the program number to a specified number.	Yes	No
407	Measurement condition set (3000-series)	Sets measurement conditions.	Yes	No
408	Measurement condition release (3000-series)	Releases measurement conditions that have been set.	Yes	No
409	Measurement condition list request (3000-series)	Requests the measurement conditions that have been set and other settings.	No	Yes
410	Single run measurement start (3000-series)	When the sample measurement condition is from 1 to 999, performs a single run measurement and requests the measurement results.	No	Yes
411	Zero run measurement start (3000-series)	If the sample measurement condition is zero, starts a zero run measurement.	No	No
412	Continuous measurement start (scan) (3000-series)	Starts a continuous measurement. The scan notification method is used for receive data.	No	Yes
413	Continuous measurement start (interrupt) (3000-series)	Starts a continuous measurement. The interrupt notification method is used for receive data. Measurement termination (3000-series)	No	Yes
414	Measurement termination (3000-series)	Terminates a continuous measurement.	No	No*1
415	Data request (3000-series)	Requests display data in the idle measurement status or the latch data generated by the measurement command.	No	Yes
416	Statistic processing execution (3000-series)	Lights the statistic processing LED and processes the statistics.	No	No
417	Statistic processing non-execution (3000-series)	Turns OFF the statistic processing LED. Statistics are not processed.	No	No

Sequence No.	Communications sequence name	Function	Ladder interface	
			Send word allocation	Receive word allocation
418	All statistic memory clear (3000-series)	Clears statistic processing memories of all programs.	No	No
419	Statistic memory clear (3000-series)	Clears statistic processing memories of program under display.	No	No
420	Statistic result request (3000-series)	Requests statistic processing result.	No	Yes
421	Memory switch set 1 (3000-series)	Sets memory switches.	Yes	No
422	Memory switch set 2 (3000-series)	Sets memory switches.	Yes	No
423	Simple AVG times set (3000-series)	Taking the simple average as the averaging method, sets the averaging times per measurement interval 4.	Yes	No
424	AVG move interval set (3000-series)	Taking the average move as the averaging method, sets the measurement interval number.	Yes	No
425	AVG move (H) times set (3000-series)	Taking the average move and high-speed data output as the averaging method, sets the averaging times per measurement interval 4.	Yes	No
426	AVG move (L) times set (3000-series)	Taking the average move and low-speed data output as the averaging method, sets the averaging times per measurement interval 4.	Yes	No
427	Automatic detection set (3000-series)	Sets work automatic detection function.	Yes	No
428	Automatic detection release (3000-series)	Releases the settings of work automatic detection function.	No	No
429	Automatic detection list request (3000-series)	Requests the settings of work automatic detection function.	No	Yes
430	3Z4L initialize (3000-series)	Clears the 3Z4L, sets the mm unit, sets the memory unit, does not processes statistics, and clears all statistic memory.	Yes	No
431	Measurement condition set (4000-series)	Sets measurement conditions.	Yes	No
432	Measurement condition release (4000-series)	Releases measurement conditions that have been set.	Yes	No
433	Measurement condition list request (4000-series)	Requests the measurement conditions that have been set and other settings.	No	Yes
434	Single run measurement start (4000-series)	When the sample measurement condition is from 1 to 999, performs a single run measurement and requests the measurement results.	No	Yes
435	Deflection measurement start (4000-series)	Starts a deflection measurement.	No	No
436	Continuous measurement start (scan) (4000-series)	Starts a continuous measurement. The scan notification method is used for receive data.	No	Yes
437	Continuous measurement start (interrupt) (4000-series)	Starts a continuous measurement. The interrupt notification method is used for receive data.	No	Yes
438	Measurement termination (4000-series)	Terminates continuous measurement.	No	No *1

Sequence No.	Communications sequence name	Function	Ladder interface	
			Send word allocation	Receive word allocation
439	Data request (4000-series)	Requests measurement data in the idle measurement status or the latch data generated by the measurement command.	No	Yes
440	Forced positive zero (4000-series)	Sets the forced zero direction to positive (+).	No	No
441	Forced negative zero (4000-series)	Sets the forced zero direction to negative (–).	No	No
442	Forced zero release (4000-series)	Releases the forced zero direction.	No	No
443	3Z4L initialize (4000-series)	Clears the 3Z4L, sets the mm unit, and clears the memory unit settings.	Yes	No
444	General-purpose command 1	Used to send data of a specified data length, and receive only OK as the receive data.	Yes	No
445	General-purpose command 2	Used to send data of a specified data length, and receive data other than OK.	Yes	Yes

*1 Depends on the measurement contents.

Note Ladder Interface Settings

YES: User settings are required for the 2nd and 3rd operands of PMCR.

NO: Send word allocation: Set a dummy word address for the 3rd operand (D).
Receive word allocation: Set the constant 0000 for the 2rd operand (S).

Connections

The connections for the 3Z4L Laser Micrometer Protocol are shown below.

RS-232C Connection

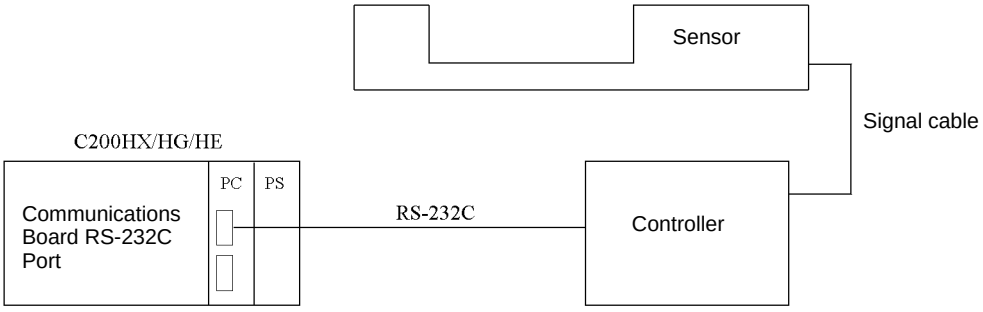

Communications Board: D-sub 9 pin (female)

Signal name	Pin No.
FG	1
SD	2
RD	3
RS	4
CS	5
DR	7
ER	8
SG	9

Controller: D-sub 25 pin (female)

Pin No.	Signal name
1	FG
2	TXD
3	RXD
4	RTS
5	CTS
6	DSR
7	SG
20	DTR

DIP Switch Settings

Shown below are the settings of 3Z4L-3000, 3Z4L-4000-series DIP switches required to use the system protocol sequences.

3Z4L-3000 Series

• DIP Switch 1

No.	Setting	Status
1	Baud rate	ON/OFF
2		ON/OFF
3	Handshaking procedure	ON/OFF
4	RS-232C interface use selection	ON/OFF
5		ON/OFF
6		ON/OFF

• DIP Switch 2

No.	Setting	Status
1	Selection for measurement section	ON/OFF
2		ON/OFF
3		ON/OFF
4		ON/OFF
5	Setting of minimum read value	ON/OFF
6		ON/OFF
7	Setting of transparent body measurement function	ON/OFF
8	Setting of simultaneous measurement function	ON/OFF

Set these settings according to the sensor connected.

Set these settings for 4 digits in the decimal portion.

• DIP Switch 3

No.	Setting	Status
1	Setting of measurement function by 2 measurement instruments	ON/OFF
2		ON/OFF
3		ON/OFF
4		ON/OFF
5	Error data exclusion function	ON/OFF
6	Multistep selection function	ON/OFF

This protocol does not support the error data exclusion function

3Z4L-4000 Series

• DIP Switch 1

No.	Setting	Status
1	Baud rate	ON/OFF
2		ON/OFF
3	Hand-shake procedure	ON/OFF
4	Delimiter	ON/OFF
5		ON/OFF
6	RS-232C interface use selection	ON/OFF
7		ON/OFF
8		ON/OFF

- **DIP Switch 2**

No.	Setting	Status
1	Selection for measurement section	ON/OFF
2		ON/OFF
3		ON/OFF
4		ON/OFF
5	Setting of minimum read value	ON/OFF
6		ON/OFF
7	Display unit	ON/OFF
8	External command setting	ON/OFF

Set these settings according to the sensor connected.

Set these settings for 4 digits in the decimal portion.

Delimiter Control Code Setting

3Z4L-4000 Series

The delimiter control codes must be set on DIP switch SW1 for the 3Z4L-4000 Series. Turn off pins 4 and 5, set the delimiter codes to CR+LF, and set the delimiter code control setting in the sequence to CR+LF. See the setting for CR+LF in the following diagram.

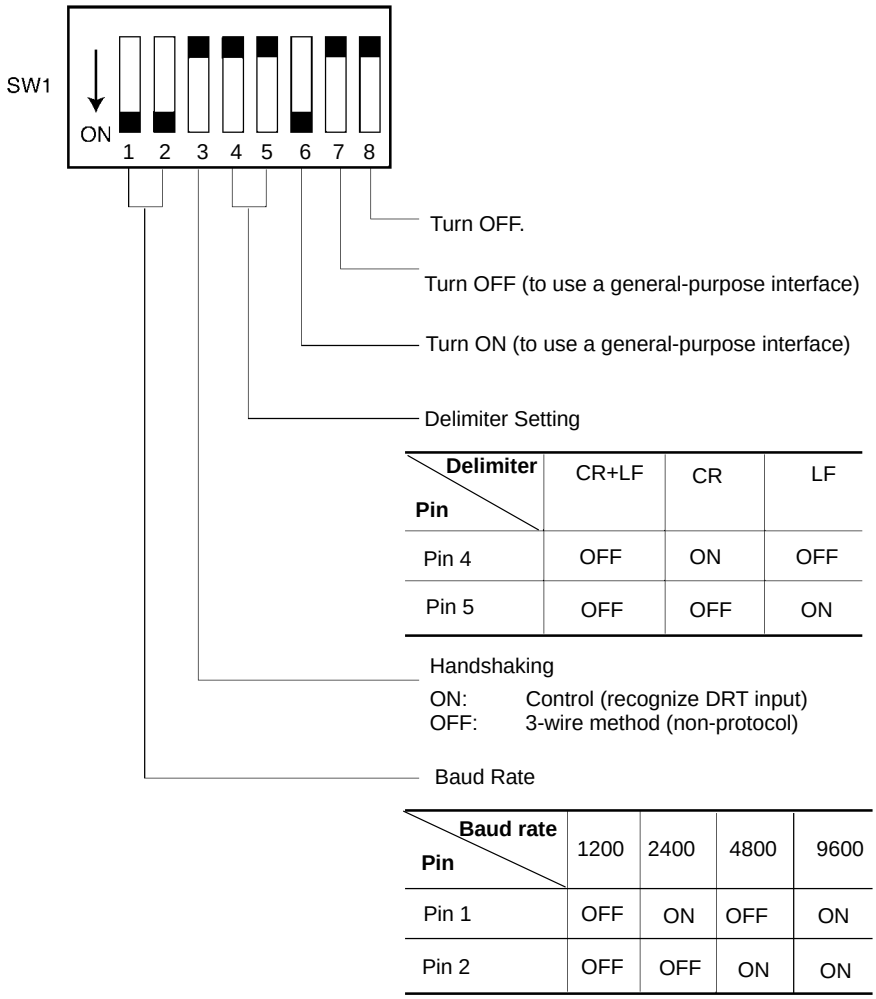

Pin \ Delimiter	CR+LF	CR	LF
Pin 4	OFF	ON	OFF
Pin 5	OFF	OFF	ON

Pin \ Baud rate	1200	2400	4800	9600
Pin 1	OFF	ON	OFF	ON
Pin 2	OFF	OFF	ON	ON

3Z4L-3000 Series

The delimiter control code does not need to be set on the DIP switch for the 3Z4L-3000 Series. Set the delimiter

control codes in the sequence to CR+LF for the send code and to CR or CR+LF for the receive code. See the settings in the following diagram.

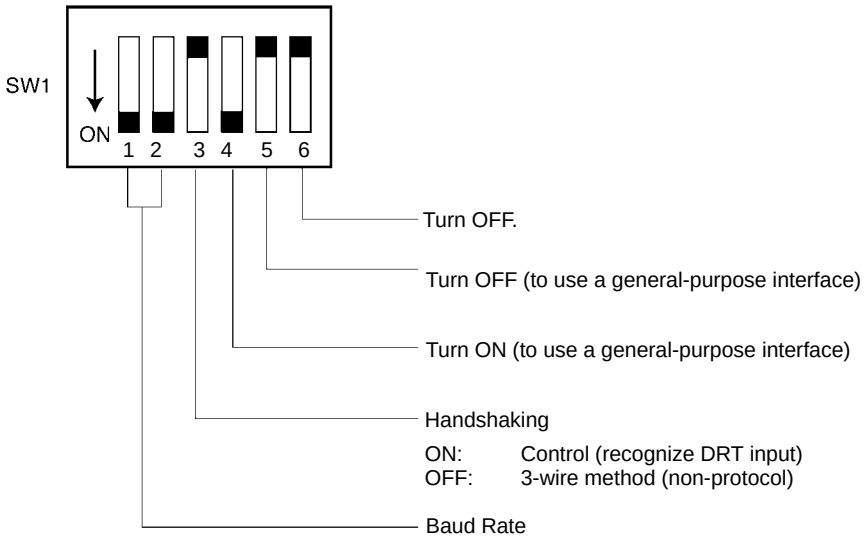

Pin \ Baud rate	1200	2400	4800	9600
Pin 1	OFF	ON	OFF	ON
Pin 2	OFF	OFF	ON	ON

The High-speed 3Z4L-3000-series Meters must have the delimiter control codes set using the memory switches. Set both the send and receive codes to CR+LF.

3Z4L Clear (Sequence No. 400)

This sequence resets errors, data, analog output, and decision result, and puts the Laser Micrometer into standby.

Send Data Word Allocation (2nd Operand of PMCR)

None.

Receive Data Word Allocation (3rd Operand of PMCR)

None.

Memory Switch Set (Sequence No. 401)

This sequence sets memory switches and the area for the work position LED.

Send Data Word Allocation (2nd Operand of PMCR)

First word of send data +0	Number of send data words			
+1	W	X	Y	Z
+2	(Undefined)			V

Offset	Contents (data format)	Data	
		3000-series	4000-series
+0	Number of send data words (4 digits BCD)	0003 (fixed)	0003 (fixed)
+1	w (1 digit BCD)	Using buzzer sound: 0 to 3	Number of digits for extinguishing indicator: 0 to 2
	x (1 digit BCD)	Automatic latch release time: 0 to 9	I/O IF RUN Input: 0 or 1
	y (1 digit BCD)	Using print timer, the setting for simultaneous measurement: 0 to 3 (high-speed), 0 to 1 (other)	Display of Err-0: 0 or 1
	z (1 digit BCD)	Display of the comma for 1/1000s digit, number of display digits: 0 to 5 (high-speed), 0 to 3 (other)	Averaging method: 0 to 2 (high-speed), 0 (other)
+2	v (1 digit BCD)	Measurement interval 4: 0 to 6	Use of comma: 0 or 1

Receive Data Word Allocation (3rd Operand of PMCR)

None.

mm Unit Set (Sequence No. 402)

This sequence sets the display unit to mm.

Send Data Word Allocation (2nd Operand of PMCR)

None.

Receive Data Word Allocation (3rd Operand of PMCR)

None.

Note This sequence can be used for the 3Z4L-4000 Series only when pin 8 on DIP switch SW2 is turned ON.

E Unit Set (Sequence No. 403)

This sequence sets the display unit to E.

Send Data Word Allocation (2nd Operand of PMCR)

None.

Receive Data Word Allocation (3rd Operand of PMCR)

None.

Note This sequence can be used for the 3Z4L-4000 Series only when pin 8 on DIP switch SW2 is turned ON.

Calibration Set (Sequence No. 404)

This sequence calibrates the Laser Micrometer.

Send Data Word Allocation (2nd Operand of PMCR)

First word of send data				
+0	Number of send data words			
+1	Decimal portion			High calibration gauge dimension
+2	(Undefined)	Decimal integer portion		
+3	Sign	(Undefined)		
+4	Decimal portion			Low calibration gauge dimension
+5	(Undefined)	(Decimal integer portion)		
+6	Sign	(Undefined)		

Offset	Contents (data format)	Data	
+0	Number of send data words (4 digits BCD)	0007 (fixed)	
+1	HC gauge dimension (Decimal portion) (4 digits BCD)	0000 to 9999	**Example** –123.4567 +1 4 5 6 7 +2 0 1 2 3 +3 2 D 0 0
+2	HC gauge dimension (integer portion) (3 digits BCD)	000 to 999	**Example** –123.4567 +1 4 5 6 7 +2 0 1 2 3 +3 2 D 0 0
+3	HC gauge dimension (Sign) (ASCII 1 character)	if +: 20(‘ ’) if –: 2D(‘–’)	
+4 to +6	LC gauge dimensions	Same as HC gauge dimensions	

Note 1. For this sequence, both the high and low calibration gauges must be set.

2. The limit value, reference value, and offset value can be set to 3 digits for the integer portion and to 4 digits for the decimal portion.

Receive Data Word Allocation (3rd Operand of PMCR)

None.

Calibration Release (Sequence No. 405)

This sequence releases the calibration of the Laser Micrometer.

Send Data Word Allocation (2nd Operand of PMCR)

None.

Receive Data Word Allocation (3rd Operand of PMCR)

None.

Note This sequence releases both the high and low calibration.

Program Number Set (3000-series) (Sequence No. 406)

This sequence switches the program number to a specified number.

Send Data Word Allocation (2nd Operand of PMCR)

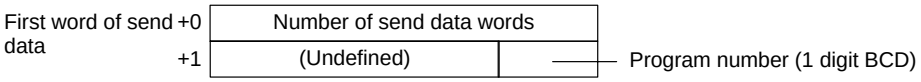

Offset	Contents (data format)	Data
+0	Number of send data words (4 digits BCD)	0002 (fixed)
+1	Program number (1 digit BCD)	0 to 9

Receive Data Word Allocation (3rd Operand of PMCR)

None.

Note Retry processing is not performed for this sequence.

Measurement Condition Set (3000-series) (Sequence No. 407)

This sequence sets measurement conditions. Conditions to be set can be selected by setting Yes/No flags.

Send Data Word Allocation (2nd Operand of PMCR)

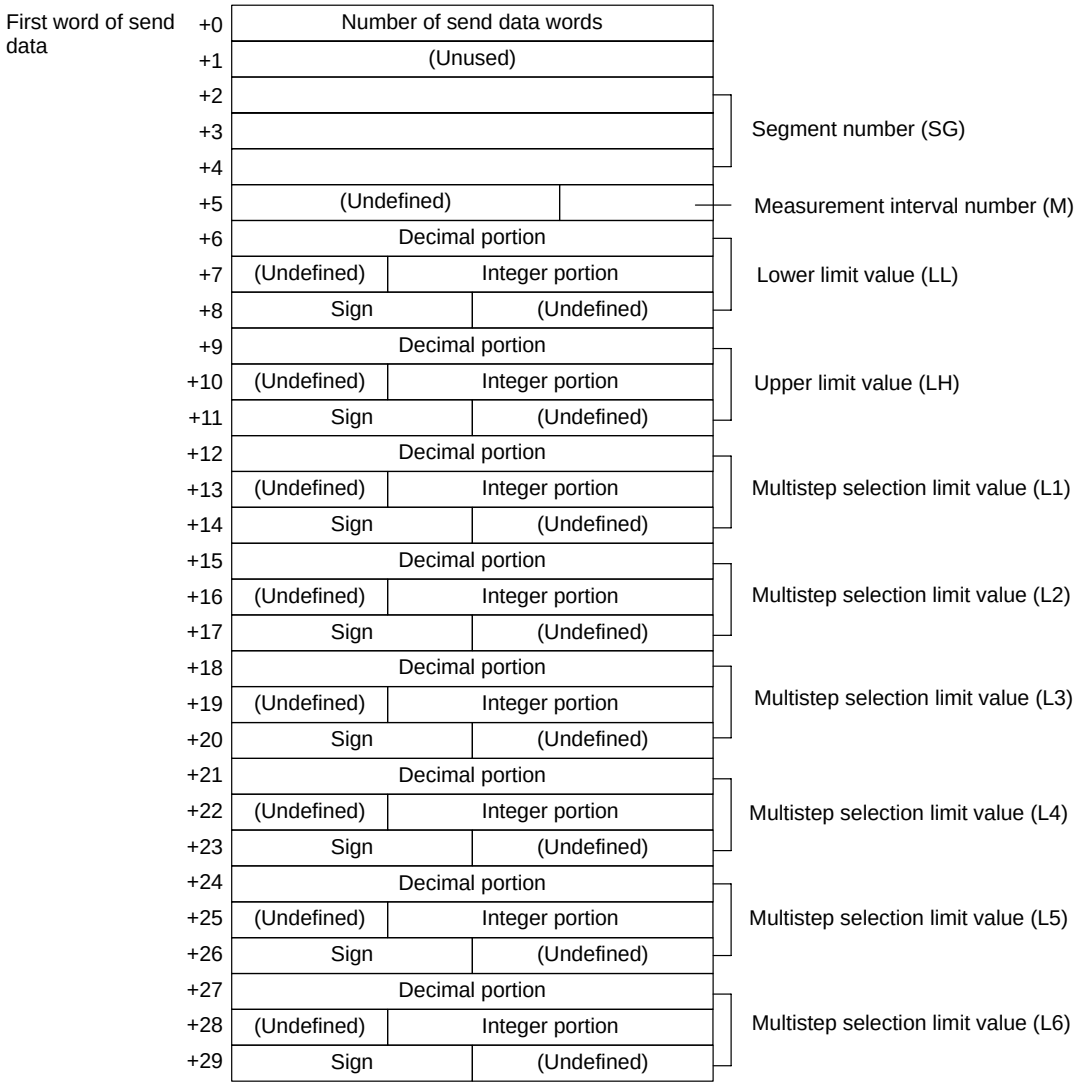

+30	Decimal portion		Reference value (REF)
+31	(Undefined)	Integer portion	
+32	Sign	(Undefined)	
+33	(Undefined)		Analog output scale number (SCL)
+34			Offset classification (OF)
+35		(Undefined)	
+36	Decimal portion		Offset value
+37	(Undefined)	Integer portion	
+38	Sign	(Undefined)	
+39	(Undefined)		Data output conditions (PR)
+40	(Undefined)	Schedule output timer	(PRT)
+41	(Undefined)	Sample measurement pulse	(SMP)
+42			Sample measurement classification
+43		(Undefined)	
+44	(Unused)		
+45	(Unused)		
+46	0		Setting Yes/No flags
+47	0		
+48	0		
+49	0		
+50	0		
+51	0		
+52	0		
+53	0		

Offset	Contents (data format)	Data	
+0	Number of send data words (4 digits BCD)	0054 (fixed)	
+1	Unused	Undefined	
+2 to +4	Segment number (ASCII 6 characters)	Combination of 31(‘1’) to 36(‘6’), 20(‘ ’)	
+5	Measurement interval number (1 digit BCD)	1 to 4	
+6	Lower limit value (decimal portion) (4 digits BCD)	0000 to 9999	**Example** –123.4567 +6: 4 5 6 7 +7: 0 1 2 3 +8: 2 D 0 0
+7	Lower limit value (Integer portion) (3 digits BCD)	000 to 999	
+8	Lower limit value (Sign) (ASCII 1 character)	if +: 20(‘ ’) if –: 2D(‘–’)	
+9 to +11	Upper limit value	Same as lower limit values	
+12 to +14	Multistep selection limit value (L1)	Same as lower limit values	
+15 to +17	Multistep selection limit value (L2)	Same as lower limit values	
+18 to +20	Multistep selection limit value (L3)	Same as lower limit values	
+21 to +23	Multistep selection limit value (L4)	Same as lower limit values	
+24 to +26	Multistep selection limit value (L5)	Same as lower limit values	
+27 to +29	Multistep selection limit value (L6)	Same as lower limit values	

Offset	Contents (data format)	Data
+30 to +32	Reference value	Same as lower limit values
+33	Analog output scale number (1 digit BCD)	1 to 3
+34 to +35	Offset classification (ASCII 3 characters)	4F4620 (“OF”), 4F4D20 (“OM”)
+36 to +38	Offset value	Same as lower limit values
+39	Data output conditions (1 digit BCD)	0 to 6
+40	Scheduled output timer (3 digits BCD)	000 to 999
+41	Sample measurement pulse (3 digits BCD)	000 to 999
+42 to +43	Sample measurement classification (ASCII 3 characters)	415647 (“AVG”), 4D4158 (“MAX”) 4D494E (“MIN”), 524E47 (“RNG”)
+44 to +45	Unused	Undefined
+46	Yes/No for segment setting (1 digit BCD)	Set: 1 (SG) Don’t set: 0
+47	Yes/No for measurement interval number setting (1 digit BCD)	Set: 1 (M) Don’t set: 0
+48	Yes/No for upper/lower limit value setting (1 digit BCD)	Set: 1 (LL,LH) Don’t set: 0
+49	Yes/No for multistep selection limit value (1 digit BCD)	Set: 1 (L1,L2,L3,L4,L5,L6) Don’t set: 0
+50	Yes/No for reference setting (1 digit BCD)	Set: 1 (REF,SCL) Don’t set: 0
+51	Yes/No for offset value setting (1 digit BCD)	Set: 1 (OF or OM) Don’t set: 0
+52	Yes/No for data output condition setting (1 digit BCD)	Set: 1 (PR,PRT) Don’t set: 0
+53	Yes/No for sample measurement pulse setting (1 digit BCD)	Set: 1 (SMP, MAX or MIN or RNG or AVG) Don’t set: 0

Receive Data Word Allocation (3rd Operand of PMCR)

None.

Note 1. This sequence cannot be used to set the error lower limit (EL), error upper limit (EH), error exclusion counter (CNT) of the error data exclusion function (centerless grinder function).

2. The following settings must be made together with this sequence; they cannot be set separately.
   Lower limit, upper limit
   Multistep selection limit
   Reference value, analog output scale number
   Data output conditions, scheduled print timer

3. The limit value, reference value, and offset value can be set to 3 digits for the integer portion and to 4 digits for the decimal portion.

Measurement Condition Release (3000-series) (Sequence No. 408)

This sequence releases the measurement conditions that have been set.

Send Data Word Allocation (2nd Operand of PMCR)

Send data word allocation is similar to that of sequence No. 407 (Measurement Condition Set). However, only the setting Yes/No flags at +46 to +53 from the send data leading word can be used.

Receive Data Word Allocation (3rd Operand of PMCR)

None.

Note
1. The following conditions are used when the measurement conditions are released: Segment becomes 1, measurement interval becomes 1, the number of sample measurement pulses becomes 1.
2. The following conditions cannot be released with this sequence: error lower limit (EL), error upper limit (EH), error exclusion counter (CNT) of the error data exclusion function (centerless grinder function).
3. The following settings cannot be released separately using this sequence.
   Lower limit, Upper limit
   Multistep selection limit
   Reference value, analog output scale number
   Data output conditions, scheduled print timer

Measurement Condition List Request (3000-series) (Sequence No. 409)

This sequence requests the measurement condition settings that have been set and other settings.

Send Data Word Allocation (2nd Operand of PMCR)

None.

Receive Data Word Allocation (3rd Operand of PMCR)

First word of send data				
+0	Number of receive data words			
+1	(Undefined)			Program number (P)
+2				Segment number (SG)
+3				
+4				
+5	(Undefined)			Measurement interval number (M)
+6	Decimal portion			Lower limit value (LL)
+7	(Undefined)	Integer portion		
+8	Sign	(Undefined)		
+9	Decimal portion			Upper limit value (LH)
+10	(Undefined)	Integer portion		
+11	Sign	(Undefined)		
+12	Decimal portion			Multistep selection limit value (L1)
+13	(Undefined)	Integer portion		
+14	Sign	(Undefined)		
+15	Decimal portion			Multistep selection limit value (L2)
+16	(Undefined)	Integer portion		
+17	Sign	(Undefined)		
+18	Decimal portion			Multistep selection limit value (L3)
+19	(Undefined)	Integer portion		
+20	Sign	(Undefined)		
+21	Decimal portion			Multistep selection limit value (L4)
+22	(Undefined)	Integer portion		
+23	Sign	(Undefined)		
+24	Decimal portion			Multistep selection limit value (L5)
+25	(Undefined)	Integer portion		
+26	Sign	(Undefined)		
+27	Decimal portion			Multistep selection limit value (L6)
+28	(Undefined)	Integer portion		
+29	Sign	(Undefined)		
+30	Decimal portion			Reference value (REF)
+31	(Undefined)	Integer portion		
+32	Sign	(Undefined)		
+33	(Undefined)			Analog output scale number (SCL)
+34				Offset classification (OF)
+35		(Undefined)		
+36	Decimal portion			Offset value (LH)
+37	(Undefined)	Integer portion		
+38	Sign	(Undefined)		
+39				Data output condition (PR)
+40	(Undefined)	Scheduled output timer		(PRT)
+41	(Undefined)	Sample measurement pulse		(SMP)
+42				Sample measurement classification
+43		(Undefined)		
+44				Statistical processing calculation classification
+45		(Undefined)		

Offset	Contents (data format)	Data	
+0	Number of receive data words (4 digits BCD)	0046 (fixed)	
+1	Program number (1 digit BCD)	0 to 9	
+2 to +4	Segment number (ASCII 6 characters)	Combination of 31('1') to 36('6'), 20(' ')	
+5	Measurement interval number (1 digit BCD)	1 to 4	
+6	Lower limit value (Decimal portion) (4 digits BCD)	0000 to 9999	**Example** –123.4567 +6: 4 5 6 7 +7: 0 1 2 3 +8: F 0 0 0
+7	Lower limit value (Integer portion) (3 digits BCD)	000 to 999	
+8	Lower limit value (Sign) (BIN)	If +: 0 If – : F	
+9 to +11	Upper limit value	Same as lower limit values	
+12 to +14	Multistep selection limit value (L1)	Same as lower limit values	
+15 to +17	Multistep selection limit value (L2)	Same as lower limit values	
+18 to +20	Multistep selection limit value (L3)	Same as lower limit values	
+21 to +23	Multistep selection limit value (L4)	Same as lower limit values	
+24 to +26	Multistep selection limit value (L5)	Same as lower limit values	
+27 to +29	Multistep selection limit value (L6)	Same as lower limit values	
+30 to +32	Reference value	Same as lower limit values	
+33	Analog output scale number (1 digit BCD)	1 to 3	
+34 to +35	Offset classification (ASCII 3 characters)	4F4620 ("OF"), 4F4D20 ("OM")	
+36 to +38	Offset value	Same as lower limit values	
+39	Data output condition (1 digit BCD)	0 to 6	
+40	Scheduled output timer (3 digits BCD)	000 to 999	
+41	Sample measurement pulse (3 digits BCD)	000 to 999	
+42 to +43	Sample measurement classification (ASCII 3 characters)	415647 ("AVG"), 4D4158 ("MAX") 4D494E ("MIN"), 524E47 ("RNG")	
+44 to +45	Statistical processing calculation classification (ASCII 3 characters)	535420 ("ST"), 4E5354 ("NST")	

Note This sequence cannot be used to request the lower limit (EL), error upper limit (EH), error exclusion counter (CNT) of the error data exclusion function (centerless grinder function).

Single Run Measurement Start (3000-series) (Sequence No. 410)

When the sample measurement condition is from 1 to 999, this sequence performs a single run measurement and requests the measurement results

Send Data Word Allocation (2nd Operand of PMCR)

None.

Receive Data Word Allocation (3rd Operand of PMCR)

Receive data storage words				
+0	Number of receive data words			
+1	(Undefined)			Program number
+2	Decision result			
+3	Decimal portion			Measurement value
+4	(Undefined)	Integer portion		
+5	Sign	(Undefined)		
+6	Decimal portion			Deviation value
+7	(Undefined)	Integer portion		
+8	Sign	(Undefined)		

Offset	Contents (data format)	Data	
+0	Number of receive data words (4 digit BCD)	With no reference setting: 0006 With reference setting: 0009	
+1	Program number (1 digit BCD)	0 to 9	
+2	Decision result (ASCII 2 characters)	With no limit setting: 0000 With limit setting: 2B4E (“+N”), 4F4B (“OK”), 2D4E (“–N”)	
+3	Measurement value (decimal portion) (4 digits BCD)	0000 to 9999	**Example** –123.4567 +3: 4 5 6 7 +4: 0 1 2 3 +5: F 0 0 0
+4	Measurement value (integer portion) (3 digits BCD)	000 to 999	
+5	Measurement value (Sign) (BIN)	If +: 0 If –: F	
+6 to +8	Deviation value	Same as measurement value *The deviation will be stored in this area only when reference setting is made.	

Zero Run Measurement Start (3000-series) (Sequence No. 411)

If the sample measurement condition is zero, a zero run measurement is started.

Send Data Word Allocation (2nd Operand of PMCR)

None.

Receive Data Word Allocation (3rd Operand of PMCR)

None.

Note The zero run measurement keeps measuring until sequence No. 414 (Measurement Termination) is executed.

Continuous Measurement Start (Scan) (3000-series) (Sequence No. 412)

A continuous measurement is started. The scan notification method is used for the receive data.

Send Data Word Allocation (2nd Operand of PMCR)

None.

Receive Data Word Allocation (3rd Operand of PMCR)

The receive data word allocation is similar to that of sequence No. 410 (Single Run Measurement Start).

Note 1. Since this sequence repeats itself within the sequence, once it is executed, it remains in the execution state until cancelled.
2. Even if execution is cancelled, the Laser Micrometer still keeps measuring. Execute sequence No. 414 (Measurement Termination) to end the sequence.

Continuous Measurement Start (Interrupt) (3000-series) (Sequence No. 413)

A continuous measurement is started. The interrupt notification method is used for the receive data and the interrupt No. is 101.

Send Data Word Allocation (2nd Operand of PMCR)

None.

Receive Data Word Allocation (3rd Operand of PMCR)

The receive data word allocation is similar to that of sequence No. 410 (Single Run Measurement Start).

Note 1. Since this sequence repeats itself within the sequence, once it is executed, it remains in the execution state until cancelled.
2. Even if execution is cancelled, the Laser Micrometer still keeps measuring. Execute sequence No. 414 (Measurement Termination) to end the sequence.

Measurement Termination (3000-series) (Sequence No. 414)

This sequence terminates a continuous measurement.

Send Data Word Allocation (2nd Operand of PMCR)

None.

Receive Data Word Allocation (3rd Operand of PMCR)

For continuous measurement: Not available

For Zero Run Measurement

The receive data word allocation is similar to that of sequence No. 410 (Single Run Measurement Start).

Data Request (3000-series) (Sequence No. 415)

This sequence requests display data in the idle measurement status or the latch data generated by the measurement command.

Send Data Word Allocation (2nd Operand of PMCR)

None.

Receive Data Word Allocation (3rd Operand of PMCR)

The receive data word allocation is similar to that of sequence No. 410 (Single Run Measurement Start).

Statistic Processing Execution (3000-series) (Sequence No. 416)

This sequence lights the statistic processing LED and implements the statistic processing.

Send Data Word Allocation (2nd Operand of PMCR)

None.

Receive Data Word Allocation (3rd Operand of PMCR)

None.

Statistic Processing Non-execution (3000-series) (Sequence No. 417)

This sequence turns the statistic processing LED off and does not carry out the statistic processing.

Send Data Word Allocation (2nd Operand of PMCR)

None.

Receive Data Word Allocation (3rd Operand of PMCR)

None.

All Statistic Memory Clear (3000-series) (Sequence No. 418)

This sequence clears statistic processing memories of all programs.

Send Data Word Allocation (2nd Operand of PMCR)

None.

Receive Data Word Allocation (3rd Operand of PMCR)

None.

Statistic Processing Memory Clear (3000-series) (Sequence No. 419)

This sequence clears statistic processing memories of the program under display.

Send Data Word Allocation (2nd Operand of PMCR)

None.

Receive Data Word Allocation (3rd Operand of PMCR)

None.

Statistic Result Request (3000-series) (Sequence No. 420)

This sequence requests the statistic processing results.

Send Data Word Allocation (2nd Operand of PMCR)

None.

Receive Data Word Allocation (3rd Operand of PMCR)

Receive data storage words				
+0	Number of receive data words			
+1	(Undefined)			Program number (P)
+2				Number of statistic data (N)
+3	(Undefined)			
+4	Decimal portion			Average value (AVG)
+5	(Undefined)	Integer portion		
+6	Sign	(Undefined)		
+7	Decimal portion			Maximum value (MAX)
+8	(Undefined)	Integer portion		
+9	Sign	(Undefined)		
+10	Decimal portion			Minimum value (MIN)
+11	(Undefined)	Integer portion		
+12	Sign	(Undefined)		
+13	Decimal portion			Range (R)
+14	(Undefined)	Integer portion		
+15	Sign	(Undefined)		
+16	Decimal portion			Standard deviation (SD)
+17	(Undefined)	Integer portion		
+18	Sign	(Undefined)		

Offset	Contents (data format)	Data	
+0	Number of receive data words (4 digits BCD)	0019 (fixed)	
+1	Program number (1digit BCD)	0 to 9	
+2 to +3	Number of statistic data (6 digits BCD)	000000 to 999999	
+4	Average value (decimal portion) (4 digits BCD)	0000 to 9999	**Example** –123.4567 +4: 4 5 6 7 +5: 0 1 2 3 +6: F 0 0 0
+5	Average value (integer portion) (4 digits BCD)	000 to 999	
+6	Average value (Sign) (BIN)	If +: 0 If –: F	
+7 to +9	Maximum value	Same as average value	
+10 to +12	Minimum value	Same as average value	
+13 to +15	Range	Same as average value	
+16 to +18	Standard deviation	Same as average value	

Note The number of digits of the Decimal portion is fixed to 4 digits. If a deviation calculation results in a value with 5 decimal places, it will be stored with one digit overflowing into the integer portion.
Examples: The value –0.1234 is stored as follows:
Area of decimal portion: 1234; Area of integer portion: 0000; Sign area: F000
The value –0.12345 is stored as follows:
Area of decimal portion: 2345; Area of integer portion: 0001; Sign area: F000

Memory Switch Set 1 (3000-series, High-speed Type) (Sequence No. 421)

This sequence sets memory switches.

Send Data Word Allocation (2nd Operand of PMCR)

First word of send data	+0	Number of send data words			
	+1	W	X	Y	Z
	+2	(Undefined)			V

Offset	Contents (data format)	Data
+0	Number of send data words (4 digits BCD)	0003 (fixed)
+1	w (1 digits BCD)	0: For single run or zero run measurement start displaying '——.' 1: For single run or zero run measurement start displaying the previous measured value
	x (1 digit BCD)	0: Perform single run measurement to the RUN signal of I/O IF 1: Repeat measurement while the RUN signal of I/O IF is input
	y (1 digit BCD)	*0: RS-232C Delimiter CR+LF 1: RS-232C Delimiter CR 2: RS-232C Delimiter LF
	z (1 digit BCD)	0: RS-232C no parity check 1: RS-232C odd parity check 2: RS-232C even parity check
+2	v (1 digit BCD)	0: Displaying 'Err-0' 1: Displaying '0'

Note Settings marked with asterisks are required for this protocol.

Receive Data Word Allocation (3rd Operand of PMCR)

None.

Note 1. Memory switches cannot be set when DIP switch SW3, pin 5 of the Laser Micrometer is not turned ON.
2. The setting (y, z) of RS-232C takes effect when the power supply is turned back on.

Memory Switch Set 2 (3000-series, High-speed Type) (Sequence No. 422)

This sequence sets memory switches.

Send Data Word Allocation (2nd Operand of PMCR)

First word of send data	+0	Number of send data words			
	+1	W	X	Y	Z
	+2	(Undefined)			V

Offset	Contents (data format)	Data
+0	Number of send data words (4 digits BCD)	0003 (fixed)
+1	w (1 digit BCD)	0: Work automatic detection is not performed 1: Work automatic detection is performed Diameter detection method (1 scan) 2: Work automatic detection is performed Diameter detection method (8 scan) 3: Work automatic detection is performed Position detection method (1 scan)
	x (1 digit BCD)	For expansion 0 (fixed)
	y (1 digit BCD)	For expansion 0 (fixed)
	z (1 digit BCD)	For expansion 0 (fixed)
+2	v (1 digit BCD)	*0: Error data exclusion function is not used 1: Error data exclusion function is used

Note Settings marked with asterisks are required for this protocol.

Receive Data Word Allocation (3rd Operand of PMCR)

None.

Note Memory switches cannot be set when DIP switch SW3, pin 5 of the Laser Micrometer is not turned ON.

Simple AVG Times Set (3000-series, High-speed Type) (Sequence No. 423)

This sequence uses the simple average as the averaging method and sets the averaging times per measurement interval 4.

Send Data Word Allocation (2nd Operand of PMCR)

First word of send data	+0	Number of send data words
	+1	Number of averaging times

Offset	Contents (data format)	Data
+0	Number of send data words (4 digits BCD)	0002 (fixed)
+1	Number of averaging times (4 digits BCD)	1 to 2048

Receive Data Word Allocation (3rd Operand of PMCR)

None.

Note This sequence cannot be used when DIP switch SW3, pin 5 of the Laser Micrometer is not turned ON.

AVG Move Interval Set (3000-series, High-speed Type) (Sequence No. 424)

This sequence uses the average move as the averaging method and sets the measurement interval number.

Send Data Word Allocation (2nd Operand of PMCR)

First word of send data +0	Number of send data words		
+1	(Undefined)		Measurement interval number

Offset	Contents (data format)	Data
+0	Number of send data words (4 digits BCD)	0002 (fixed)
+1	Measurement interval number (1 digit BCD)	1 to 4

Receive Data Word Allocation (3rd Operand of PMCR)

None.

Note This sequence cannot be used when DIP switch SW3, pin 5 of the Laser Micrometer is not turned ON.

AVG Move (H) Times Set (3000-series, High-speed Type) (Sequence No. 425)

This sequence uses the average move and high-speed data output as the averaging method and sets the averaging times per measurement interval 4.

Send Data Word Allocation (2nd Operand of PMCR)

First word of send data +0	Number of send data words
+1	Number of averaging times

Offset	Contents (data format)	Data
+0	Number of send data words (4 digits BCD)	0002 (fixed)
+1	Number of averaging times (4 digits BCD)	16 to 2048

Receive Data Word Allocation (3rd Operand of PMCR)

None.

Note This sequence cannot be used when DIP switch SW3, pin 5 of the Laser Micrometer is not turned ON.

AVG Move (L) Times Set (3000-series, High-speed Type) (Sequence No. 426)

This sequence uses the average move and low-speed data output as the averaging method and sets the averaging times per measurement interval 4.

Send Data Word Allocation (2nd Operand of PMCR)

First word of send data +0	Number of send data words
+1	Number of averaging times

Offset	Contents (data format)	Data
+0	Number of send data words (4 digits BCD)	0002 (fixed)
+1	Number of averaging times (4 digits BCD)	32 to 2048

Receive Data Word Allocation (3rd Operand of PMCR)

None.

Note This sequence cannot be used when DIP switch SW3, pin 5 of the Laser Micrometer is not turned ON.

Automatic Detection Set (3000-series, High-speed Type) (Sequence No. 427)

This sequence sets the work automatic detection function.

Send Data Word Allocation (2nd Operand of PMCR)

Receive data storage words				
+0	Number of send data words			
+1	(Undefined)	The number of measuring times		
+2	Invalid time			
+3	Decimal portion			Detection lower limit
+4	(Undefined)	Integer portion		
+5	Sign	(Undefined)		
+6	Decimal portion			Detection upper limit
+7	(Undefined)	Integer portion		
+8	Sign	(Undefined)		

Offset	Contents (data format)	Data	
+0	Number of send data words (4 digits BCD)	0009 (fixed)	
+1	Number of measurements (3 digits BCD)	001 to 999	
+2	Invalid time (4 digits BCD)	0001 to 9999	
+3	Detection lower limit (decimal portion) (4 digits BCD)	0000 to 9999	**Example** –123.4567 +3: 4 5 6 7 +4: 0 1 2 3 +5: 2 D 0 0
+4	Detection lower limit (integer portion) (3 digits BCD)	000 to 999	
+5	Detection lower limit (Sign) (ASCII 1 character)	If +: 20 (‘ ’) If – : 2D (‘–’)	
+6 to +8	Detection upper limit	Same as detection lower limit	

Receive Data Word Allocation (3rd Operand of PMCR)

None.

Note This sequence cannot be used when DIP switch SW3, pin 5 of the Laser Micrometer is not turned ON.

Automatic Detection Release (3000-series, High-speed Type) (Sequence No. 428)

This sequence releases the setting of work automatic detection function.

Send Data Word Allocation (2nd Operand of PMCR)

None.

Receive Data Word Allocation (3rd Operand of PMCR)

None.

Note This sequence cannot be used when DIP switch SW3, pin 5 of the Laser Micrometer is not turned ON.

Automatic Detection List Request (3000-series, High-speed Type) (Sequence No. 429)

This sequence requests the settings of work automatic detection function.

Send Data Word Allocation (2nd Operand of PMCR)

None.

Receive Data Word Allocation (3rd Operand of PMCR)

Receive data storage words				
+0	Number of receive data words			
+1	(Undefined)	The number of measuring times		
+2	Invalid time			
+3	Decimal portion			Detection lower limit
+4	(Undefined)	Integer portion		
+5	Sign	(Undefined)		
+6	Decimal portion			Detection upper limit
+7	(Undefined)	Integer portion		
+8	Sign	(Undefined)		

Offset	Contents (data format)	Data	
+0	Number of receive data words (4 digits BCD)	0009 (fixed)	
+1	The number of measuring times (3 digits BCD)	000 to 999	
+2	Invalid time (4 digits BCD)	0001 to 9999	
+3	Detection lower limit (decimal portion) (4 digits BCD)	0000 to 9999	**Example** –123.4567 +3: 4 5 6 7 +4: 0 1 2 3 +5: F 0 0 0
+4	Detection lower limit (integer portion) (3 digits BCD)	000 to 999	
+5	Detection lower limit (Sign) (BIN)	If +: 0 If –: F	
+6 to +8	Detection upper limit	Same as detection lower limit	

Note This sequence cannot be used when DIP switch SW3, pin 5 of the Laser Micrometer is not turned ON.

3Z4L Initialize (3000-series) (Sequence No. 430)

This sequence clears the 3Z4L, sets the mm unit, sets memory switches, does not process statistics, and clears the statistic memory.

Send Data Word Allocation (2nd Operand of PMCR)

The send data word allocation is similar to that of sequence No. 401 (Memory Switch Setting)

Receive Data Word Allocation (3rd Operand of PMCR)

None.

Measurement Condition Set (4000-series) (Sequence No. 431)

This sequence sets measurement conditions. Conditions to be set can be selected by setting Yes/No flags.

Send Data Word Allocation (2nd Operand of PMCR)

First word of send data				
+0	Number of send data words			
+1	(Undefined)			Segment number (SG)
+2	(Undefined)			Measurement interval number (M)
+3	Decimal portion			Lower limit value (LL)
+4	(Undefined)	Integer portion		
+5	Sign	(Undefined)		
+6	Decimal portion			Upper limit value (LH)
+7	(Undefined)	Integer portion		
+8	Sign	(Undefined)		
+9	Decimal portion			Reference value (REF)
+10	(Undefined)	Integer portion		
+11	Sign	(Undefined)		
+12	(Undefined)			Analog output scale number (SCL)
+13	(Unused)			
+14	(Unused)			
+15	(Unused)			
+16	(Undefined)			Data output conditions (PR)
+17	(Undefined)	Data output timer (BCD 3 digits)		(PRT)
+18	(Undefined)			Number of seconds for latch timer (RLT)
+19	0			Setting Yes/No flags
+20	0			
+21	0			
+22	0			
+23	0			
+24	0			

Offset	Contents (data format)	Data	
+0	Number of send data words (4 digits BCD)	0025 (fixed)	
+1	Segment number (1 digit BCD)	1 to 5	
+2	Measurement interval number (1 digit BCD)	1 to 7	
+3	Lower limit value (Decimal portion) (4 digits BCD)	0000 to 9999	**Example** –123.4567 +3: 4 5 6 7 +4: 0 1 2 3 +5: 2 D 0 0
+4	Lower limit value (integer portion) (3 digits BCD)	000 to 999	
+5	Lower limit value (Sign) (ASCII 1 character)	If +: 20 (‘ ’) If – : 2D (‘–’)	
+6 to +8	Upper limit value	Same as lower limit value	
+9 to +11	Reference value	Same as lower limit value	
+12	Analog output scale number (1 digit BCD)	0 to 3	
+13 to +15	Unused		
+16	Data output conditions (1 digit BCD)	0 to 6	
+17	Data output timer value (3 digits BCD)	000 to 999	
+18	Number of seconds for latch timer (2 digits BCD)	00 to 99	
+19	Yes/No for segment setting (1 digit BCD)	Set: 1(SG) Don’t set: 0	
+20	Yes/No for measurement interval number setting (1 digit BCD)	Set: 1(M) Don’t set: 0	
+21	Yes/No for upper/lower limit value setting (1 digit BCD)	Set: 1(LL, LH) Don’t set: 0	
+22	Yes/No for reference setting (1 digit BCD)	Set: 1(REF, SCL) Don’t set: 0	
+23	Yes/No for data output condition setting (1 digit BCD)	Set: 1(PR, PRT) Don’t set: 0	
+24	Yes/No for latch timer setting (1 digit BCD)	Set: 1(RLT) Don’t set: 0	

Receive Data Word Allocation (3rd Operand of PMCR)

None.

Note 1. The following settings must be made together with this sequence; they cannot be set separately.
Lower limit, upper limit
Reference value, data output timer
Data output conditions, scheduled print timer

2. The limit value and reference value can be set to 3 digits for the integer portion and to 4 digits for the decimal portion.

Measurement Condition Release (4000-series) (Sequence No. 432)

This sequence clears the measurement conditions that have been set.

Send Data Word Allocation (2nd Operand of PMCR)

The send data word allocation is similar to that of sequence No. 431 (Measurement Condition Setting). However, only the setting Yes/No flags at +19 to +24 from the send data leading word can be used.

Receive Data Word Allocation (3rd Operand of PMCR)

None.

Note 1. The following conditions are used when the measurement conditions are released: Segment becomes 1 and the measurement interval becomes 1.

2. The following settings cannot be cleared separately using this sequence. They all must be cleared at the same time.
   Lower limit, Upper limit
   Data output conditions, Scheduled print timer
   The scale (SCL) and data output timer (PRT) cannot be cleared.

3. This sequence can be used for the 3Z4L-4000 Series only when pin 8 on DIP switch SW2 is turned ON.

Measurement Condition List Request (4000-series) (Sequence No. 433)

This sequence requests the measurement condition settings that have been set and other settings.

Send Data Word Allocation (2nd Operand of PMCR)

None.

Receive Data Word Allocation (3rd Operand of PMCR)

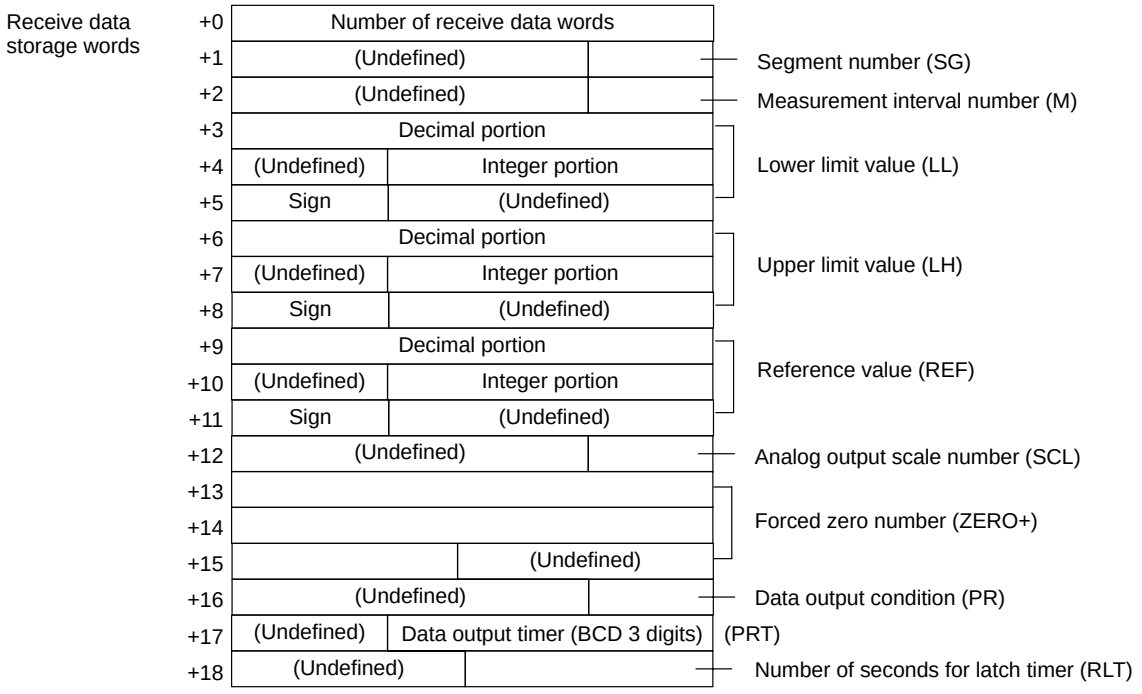

Offset	Contents (data format)	Data	
+0	Number of receive data words (4 digits BCD)	0019 (fixed)	
+1	Segment number (1 digit BCD)	1 to 5	
+2	Measurement interval number (1 digit BCD)	1 to 7	
+3	Lower limit value (Decimal portion) (4 digits BCD)	0000 to 9999	**Example** –123.4567 +3: 4 5 6 7 +4: 0 1 2 3 +5: F 0 0 0
+4	Lower limit value (Integer portion) (3 digits BCD)	000 to 999	
+5	Lower limit value (Sign) (BIN)	If +: 0 If –: F	
+6 to +8	Upper limit value	Same as lower limit value	
+9 to +11	Reference value	Same as lower limit value	
+12	Analog output scale number (1 digit BCD)	0 to 3	
+13 to +15	Forced zero number (ASCII 5 characters)	5A45524F2B (“ZERO+”) 4E4F524D20 (“NORM ”) 5A45524F2D (“ZERO–”)	
+16	Data output condition (1 digit BCD)	0 to 6	
+17	Data output timer value (3 digits BCD)	000 to 999	
+18	Number of seconds for latch timer (2 digits BCD)	00 to 99	

Note This sequence can be used for the 3Z4L-4000 Series only when pin 8 on DIP switch SW2 is turned ON.

Single Run Measurement Start (4000-series) (Sequence No. 434)

When the sample measurement condition is from 1 to 999, this sequence performs a single run measurement and requests the measurement results.

Send Data Word Allocation (2nd Operand of PMCR)

None.

Receive Data Word Allocation (3rd Operand of PMCR)

Receive data storage words

+0	Number of receive data words		
+1	Decision result		
+2	Decimal portion		Measurement value
+3	(Undefined)	Integer portion	
+4	Sign	(Undefined)	
+5	Decimal portion		Deviation value
+6	(Undefined)	Integer portion	
+7	Sign	(Undefined)	

Offset	Contents (data format)	Data	
+0	Number of receive data words (4 digits BCD)	With no reference setting: 0005 With reference setting: 0008	
+1	Decision result (ASCII 2 characters)	With no limit setting: 0000 With limit setting: 2B4E (“+N”), 4F4B (“OK”), 2D4E (“–N”)	
+2	Measurement value (decimal portion) (4 digits BCD)	0000 to 9999	**Example** –123.4567 +2: 4 5 6 7 +3: 0 1 2 3 +4: F 0 0 0
+3	Measurement value (integer portion) (3 digits BCD)	000 to 999	
+4	Measurement value (Sign) (BIN)	If +: 0 If –: F	
+5 to +7	Deviation value	Same as measurement value *The deviation will be stored in this area only when reference setting is made.	

Deflection Measurement Start (4000-series) (Sequence No. 435)

This sequence starts a deflection measurement.

Send Data Word Allocation (2nd Operand of PMCR)
None.

Receive Data Word Allocation (3rd Operand of PMCR)
None.

Note The deflection measurement keeps measuring until sequence No. 438 (Measurement Termination) is executed.

Continuous Measurement Start (Scan) (4000-series) (Sequence No. 436)

This sequence starts a continuous measurement. The scan notification method is used for the receive data.

Send Data Word Allocation (2nd Operand of PMCR)
None.

Receive Data Word Allocation (3rd Operand of PMCR)
The receive data word allocation is similar to that of sequence No. 434 (Single Run Measurement Start).

Note
1. Since this sequence repeats itself within the sequence, once it is executed, it remains in the execution state until cancelled.
2. Even if execution is cancelled, the Laser Micrometer still keeps measuring. Execute sequence No. 438 (Measurement Termination) to end the sequence.

Continuous Measurement Start (Interrupt) (4000-series) (Sequence No. 437)

This sequence starts a continuous measurement. The interrupt notification method is used for the receive data and the interrupt No. is 101.

Send Data Word Allocation (2nd Operand of PMCR)
None.

Receive Data Word Allocation (3rd Operand of PMCR)
The receive data word allocation is similar to that of sequence No. 434 (Single Run Measurement Start).

Note
1. Since this sequence repeats itself within the sequence, once it is executed, it remains in the execution state until cancelled.
2. Even if execution is cancelled, the Laser Micrometer still keeps measuring. Execute sequence No. 438 (Measurement Termination) to end the sequence.

Continuous Measurement Termination (4000-series) (Sequence No. 438)

This sequence terminates continuous measurement.

Send Data Word Allocation (2nd Operand of PMCR)
None.

Receive Data Word Allocation (3rd Operand of PMCR)
For continuous measurement: None.

For Deflection Measurement
The receive data word allocation is similar to that of sequence No. 434 (Single Run Measurement Start).

Data Request (4000-series) (Sequence No. 439)

This sequence requests display data in the idle measurement status or latch data generated by the measurement command.

Send Data Word Allocation (2nd Operand of PMCR)
None.

Receive Data Word Allocation (3rd Operand of PMCR)
The receive data word allocation is similar to that of sequence No. 434 (Single Run Measurement Start).

Forced Positive Zero (4000-series) (Sequence No. 440)

This sequence sets the forced zero direction to positive (+)

Send Data Word Allocation (2nd Operand of PMCR)
None.

Receive Data Word Allocation (3rd Operand of PMCR)
None.

Forced Negative Zero (4000-series) (Sequence No. 441)

This sequence sets the forced zero direction to negative (–)

Send Data Word Allocation (2nd Operand of PMCR)
None.

Receive Data Word Allocation (3rd Operand of PMCR)
None.

Forced Zero Release (4000-series) (Sequence No. 442)

This sequence releases the forced zero direction.

Send Data Word Allocation (2nd Operand of PMCR)
None.

Receive Data Word Allocation (3rd Operand of PMCR)
None.

3Z4L Initialize (4000-series) (Sequence No. 443)

This sequence clears the 3Z4L, sets the mm unit, and sets memory switches.

Send Data Word Allocation (2nd Operand of PMCR)
The send data word allocation is similar to that of sequence No. 401 (Memory Switch Setting).

Receive Data Word Allocation (3rd Operand of PMCR)
None.

General-purpose Command 1 (4000-series) (Sequence No. 444)

This general-purpose command is used to send data with a specified data length, and receive back only OK. The terminator (CR) is automatically attached to the send data.

Send Data Word Allocation (2nd Operand of PMCR)

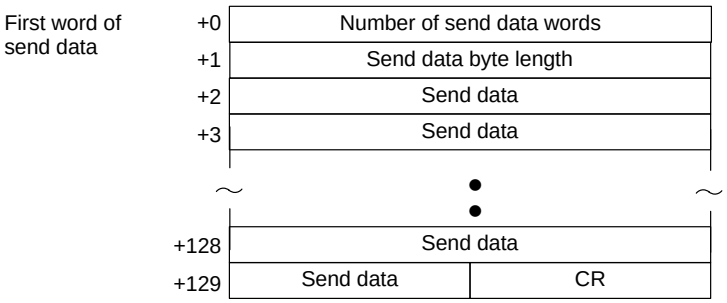

Offset	Contents (data format)	Data
+0	Number of send data words (4 digits BCD)	0003 to 0129
+1	Send data byte length (4 digits BCD)	0001 to 0255 The number of bytes of send data excluding the terminator (CR)
+2 to +129	Send data (ASCII)	Send data up to 255 bytes maximum Specify in ASCII.

Receive Data Word Allocation (3rd Operand of PMCR)

None.

General-purpose Command 2 (4000-series) (Sequence No. 445)

This general-purpose command is used to send data with a specified data length, and receive back receive data other than OK. The terminator (CR) is automatically attached to the send data.

Send Data Word Allocation (2nd Operand of PMCR)

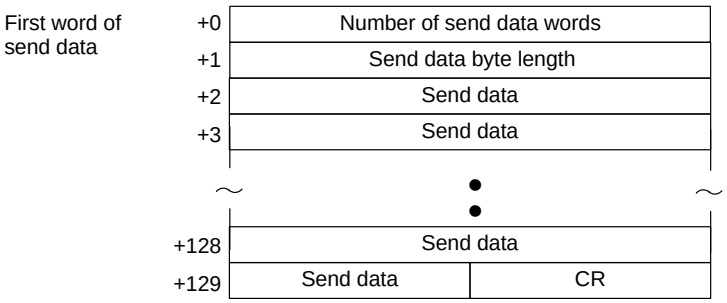

Offset	Contents (data format)	Data
+0	Number of send data words (4 digits BCD)	0003 to 0129
+1	Send data byte length (4 digits BCD)	0001 to 0255 The number of bytes of send data excluding the terminator (CR)
+2 to +129	Send data (ASCII)	Send data up to 255 bytes maximum Specify in ASCII.

Receive Data Word Allocation (3rd Operand of PMCR)

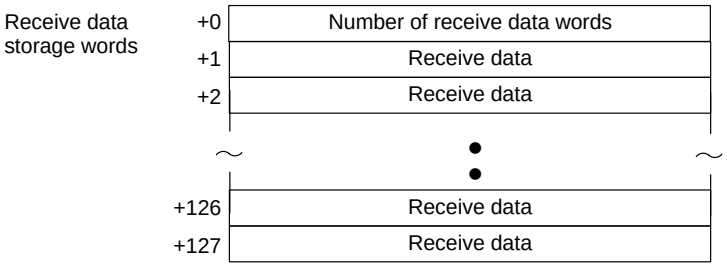

Offset	Contents (data format)	Data
+0	Number of receive data words (4 digits BCD)	0001 to 0128
+1 to +127	Receive data (ASCII)	When the receive data exceed 254 bytes, only 254 bytes are stored.

Appendix J
Visual Inspection System Protocol

The Visual Inspection System Protocol is used to make various settings or control remotely the Visual Recognition Device connected to the Communications Board via RS-232C cable.

Protocol Configuration

The configuration of the Visual Inspection System Protocol is shown below.

Sequence No.	Communications sequence name	Function	Ladder interface	
			Send word allocation	Receive word allocation
450	Measurement execution (F200)	Carries out one measurement one and stores the measurement results in the specified words.	No	Yes
451	Continuous measurement execution (scan) (F200)	Carries out continuously setting the F200 and storing the measurement results in the specified words.	No	Yes
452	Continuous measurement execution (interrupt) (F200)	Carries out continuously setting the F200 and storing the measurement results in the specified words.	No	Yes
453	Reference object registration (group) (F200)	Performs reference position registration and evaluation criterion registration at the same time.	No	No
454	Reference object registration (reference position) (F200)	Registers the reference position for measuring the amount of position displacement when a position displacement compensation is used.	No	No
455	Reference object registration (evaluation criterion) (F200)	Registers the reference value to discriminate the output format.	No	No
456	Evaluation condition change (F200)	Changes the upper and lower limit values of the evaluation condition of the designated output No.	Yes	No
457	Arbitrary measurement value acquisition (F200)	Stores the measurement values of arbitrary measurement item regardless of output format in the specified words.	Yes	Yes
460	Measurement execution (F300)	Carries out one measurement and stores the measurement results in the specified words.	No	Yes
461	Continuous measurement execution (scan) (F300)	Carries out continuously setting the F300 and storing the measurement results in the specified words.	No	Yes
462	Continuous measurement execution (interrupt) (F300)	Carries out continuously setting the F300 and storing the measurement results in the specified words.	No	Yes
463	Reference object registration command 1 execution (F300)	Performs a measurement for the input image and updates the reference object data of the full window.	No	No
464	Reference object registration command 2 execution (F300)	Performs a measurement for the input image and updates the reference object data of the full window	Yes	No
465	Illumination fluctuation follow execution (F300)	Executes an illumination fluctuation follow.	No	No
470	Measurement execution and positioning (F350)	Carries out one measurement and stores the measurement results in the specified words.	No	Yes

Sequence No.	Communications sequence name	Function	Ladder interface	
			Send word allocation	Receive word allocation
471	Camera designation and positioning (F350)	Designates the camera for measurement.	Yes	No
472	Scene switching and positioning (F350)	Switches to a designated scene No.	Yes	No
473	Inspection execution and character inspection (F350)	Carries out one inspection and outputs inspection results to the video monitor.	No	No
474	Character string inspection and character inspection (F350)	Changes the inspection character string of a designated inspection area No. to a designated character string.	Yes	No
480	Camera change (decrease by 1) (F200/300)	Decreases the display camera No. by 1.	No	No
481	Camera change (increase by 1) (F200/300)	Increases the display camera No. by 1.	No	No
482	Binary level modification (F200/300)	Modifies the binary levels (upper limit and lower limit values) of a designated window number No.	Yes	No
483	Reset (F200/300)	Resets the F200/F300.	No	No
490	Scene switch (decrease by 1)	Decreases the scene No. by 1.	No	No
491	Scene switch (increase by 1)	Increases the scene No. by 1.	No	No
492	Scene switch (arbitrary)	Switches to a designated scene No.	Yes	No
493	Measurement, inspection termination	Terminates the measurement and returns to the home menu.	No	No
494	General-purpose command (send)	Sets and executes commands that are otherwise not supported.	Yes	No
495	General-purpose command (send/receive)	Sets and executes commands that are otherwise not supported.	Yes	Yes

Note Ladder Interface Settings

YES: User settings are required for the 2nd and 3rd operands of PMCR.

NO: Send word allocation: Set a dummy word address for the 3rd operand (D).
Receive word allocation: Set the constant 0000 for the 2rd operand (S).

Connections

The connections for using the Visual Inspection System Protocol are shown below.

RS-232C Connections

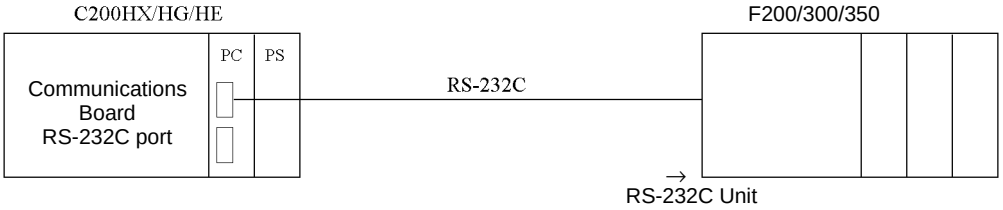

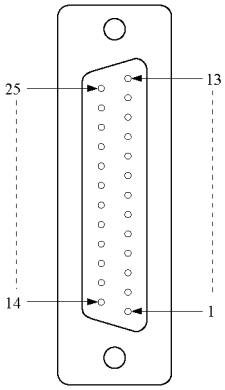

Pin No.	Signal name	Abbreviation
1	Protective ground or earth	FG (GND)
2	Send data	SD (TXD)
3	Receive data	RD (RXD)
4	Request to send	RS (RTS)
5	Clear to send	CS (CTS)
6	Data set ready	DR (DSR)
7	Signal ground	SG (GND)
8	Carrier detection (Data word receive)	CD (DCD)
20	Data terminal ready	ER (DTR)

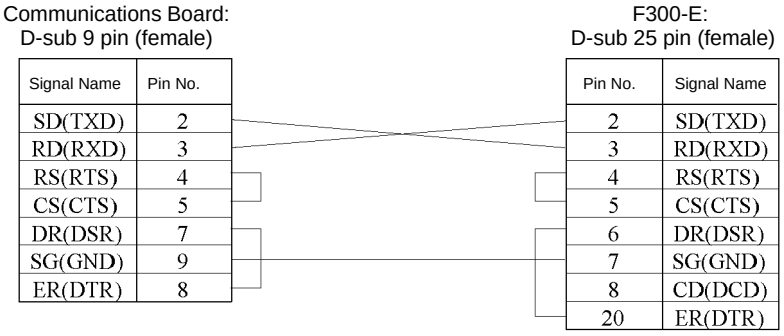

- **For RS/CS Flow Control**

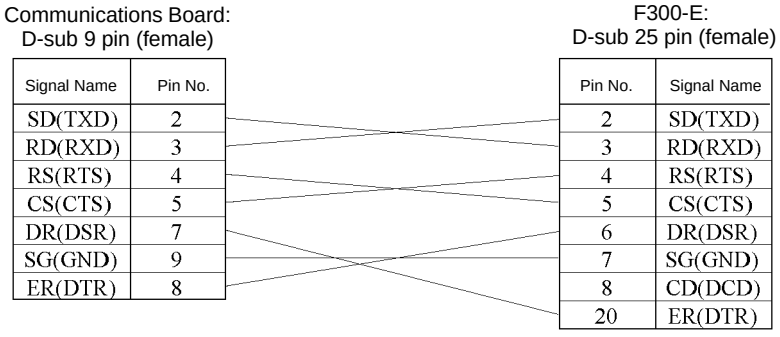

Measurement Execution (F200) (Sequence No. 450)

This sequence carries out one measurement and stores the measurement results in the specified words.

Send Data Word Allocation (2nd Operand of PMCR)

None.

Receive Data Word Allocation (3rd Operand of PMCR)

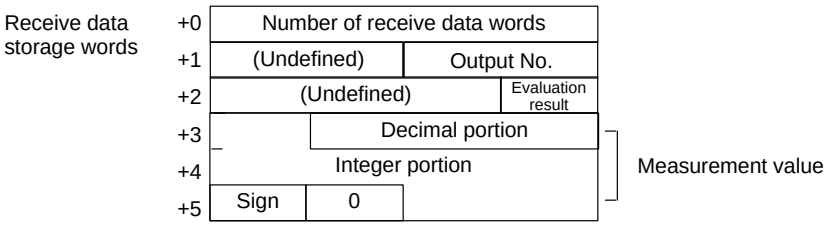

Offset	Content (data format)	Data
+0	Number of receive data words (4 digits BCD)	0006
+1	Output No. (2 digits BCD)	00 to 07
+2	Evaluation result (1 digit BCD)	0: OK 1: NG
+3 to +5	Measurement value (decimal portion) (3 digits BCD) Measurement value (integer portion) (7 digits BCD) Measurement value (sign) (1 digit)	**Example** –123.456 +3: 3456 +4: 0012 +5: F000 **Example** +123.456 +3: 3456 +4: 0012 +5: 0000 F is stored for negative values.

Note 1. Only one output No. can be stored.

2. The ranges of measurement values are as follows:
For calibration OFF setting : –2147483.648 to 2147483.647
For calibration ON setting : –9999999.999 to 9999999.999

3. If a measurement value exceeds the range of measurement values when calibration is turned off, undefined data is stored in the specified words.

Continuous Measurement Execution (Scan) (F200) (Sequence No. 451)

This sequence carries out continuously the setting of the F200 and stores measurement results in the specified words. The scan notification method is used for the receive data.

Send Data Word Allocation (2nd Operand of PMCR)

None.

Receive Data Word Allocation (3rd Operand of PMCR)

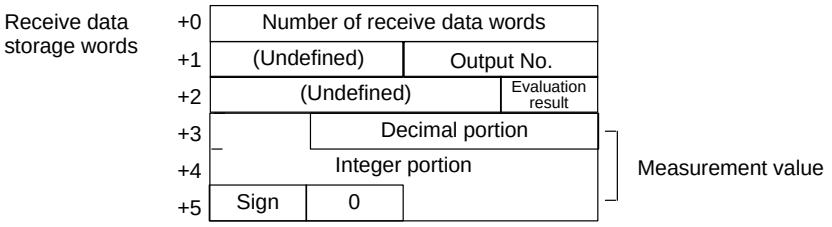

Offset	Content (data format)	Data
+0	Number of receive data words (4 digits BCD)	0006
+1	Output No. (2 digits BCD)	00 to 07
+2	Evaluation result (1 digit BCD)	0: OK 1: NG
+3 to +5	Measurement value (decimal portion) (3 digits BCD) Measurement value (integer portion) (7 digits BCD) Measurement value (sign) (1 digit)	**Example** –123.456: +3 3456, +4 0012, +5 F000 **Example** +123.456: +3 3456, +4 0012, +5 0000 F is stored for negative values.

Note 1. Only one output No. can be designated.

2. Turn OFF CIO 28911 (if port A is used) or CIO 28915 (if port B is used) to terminate this sequence.

3. The ranges of measurement values are as follows:
For calibration OFF setting : –2147483.648 to 2147483.647
For calibration ON setting : –9999999.999 to 9999999.999

4. If a measurement value exceeds the range of measurement values when calibration is turned off, undefined data is stored in the specified words.

Continuous Measurement Execution (Interrupt) (F200) (Sequence No. 452)

This sequence carries out continuously setting the F200 and stores measurement results in the specified words. The interrupt notification method is used for the receive data. The interrupt No. is 102.

Send Data Word Allocation (2nd Operand of PMCR)

None.

Receive Data Word Allocation (3rd Operand of PMCR)

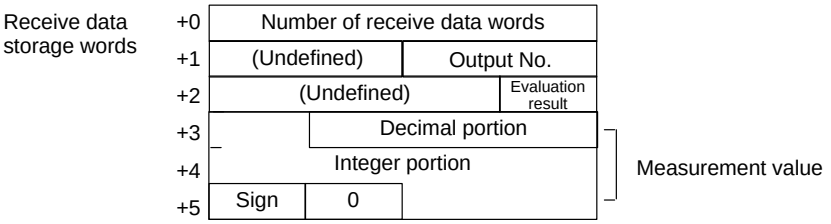

Offset	Content (data format)	Data
+0	Number of receive data words (4 digits BCD)	0006
+1	Output No. (2 digits BCD)	00 to 07
+2	Evaluation result (1 digit BCD)	0: OK 1: NG
+3 to +5	Measurement value (decimal portion) (3 digits BCD) Measurement value (integer portion) (7 digits BCD) Measurement value (sign) (1 digit)	**Example** –123.456: +3 3456, +4 0012, +5 F000 **Example** +123.456: +3 3456, +4 0012, +5 0000 F is stored for negative values.

Note 1. Only one output No. can be designated.

2. Turn OFF CIO 28911 (if port A is used) or CIO 28915 (if port B is used) to terminate this sequence.

3. The ranges of measurement values are as follows:
   For calibration OFF setting : –2147483.648 to 2147483.647
   For calibration ON setting : –9999999.999 to 9999999.999
4. If a measurement value exceeds the range of measurement values when calibration is turned off, undefined data is stored in the specified words.

Reference Object Registration (Group) (F200) (Sequence No. 453)

This sequence performs reference position registration and criterion registration at the same time.

Send Data Word Allocation (2nd Operand of PMCR)

None.

Receive Data Word Allocation (3rd Operand of PMCR)

None.

Reference Object Registration (Reference Position) (F200) (Sequence No. 454)

This sequence registers the reference position for measuring the amount of position displacement when a position displacement compensation is used.

Send Data Word Allocation (2nd Operand of PMCR)

None.

Receive Data Word Allocation (3rd Operand of PMCR)

None.

Reference Object Registration (Criterion) (F200) (Sequence No. 455)

This sequence registers a reference value to discriminate the output format.

Send Data Word Allocation (2nd Operand of PMCR)

None.

Receive Data Word Allocation (3rd Operand of PMCR)

None.

Evaluation Condition Change (F200) (Sequence No. 456)

This sequence changes the upper and lower limit values of evaluation condition of the designated output No.

Send Data Word Allocation (2nd Operand of PMCR)

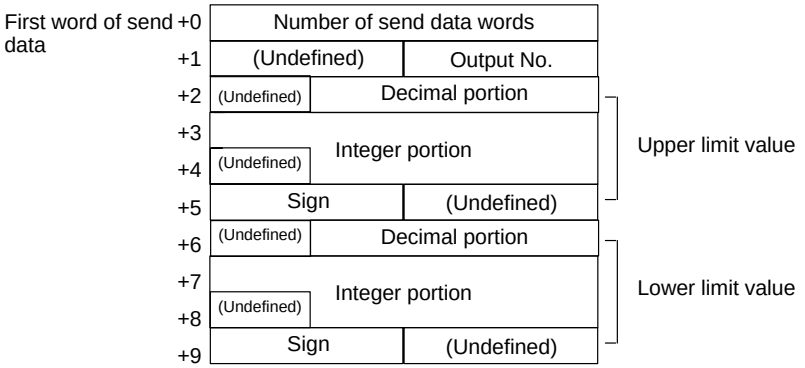

Offset	Content (data format)	Data
+0	Number of send data words (4 digits BCD)	0010
+1	Output No. (2 digits BCD)	00 to 07
+2 to +5	Upper limit value (decimal portion) (3 digits BCD) Upper limit value (integer portion) (7 digits BCD) Upper limit value (sign) (ASCII 2 digits)	**Example** –123.456: +2 0567, +3 1234, +4 0000, +5 2D00 **Example** +123.456: +2 0678, +3 2345, +4 0001, +5 3000
+6 to +9	Lower limit value (decimal portion) (3 digits BCD) Lower limit value (integer portion) (7 digits BCD) Lower limit value (sign) (ASCII 2 digits)	Same as upper limit.

Receive Data Word Allocation (3rd Operand of PMCR)

None.

Note 1. Only one output No. can be designated.
2. Enter values so that upper limit ≥ lower limit.
3. Enter upper limit and lower limit values within the range –2147483.648 to 2147483.648.

Arbitrary Measurement Value Acquisition (F200) (Sequence No. 457)

This sequence stores measurement values of arbitrary measurement items regardless of output format in the specified words.

Send Data Word Allocation (2nd Operand of PMCR)

First word of send data	+0	Number of send data words	
	+1	(Undefined)	Data 1
	+2	(Undefined)	Data 2

Offset	Content (data format)	Data
+0	Number of send data words (4 digits BCD)	0003
+1	Data 1 (2 digits BCD)	00: Area 01: Center of gravity x 02: Center of gravity y 03: Main axis angle 04: Output format 05: Reference value of output format 06: X displacement 07: Y displacement 08: Angle displacement 09: X reference position 10: Y reference position 11: Angle reference position
+2	Data 2 (2 digits BCD)	When 00 to 03 is set to data 1 Window No.: 00 to 07 When 04 to 05 is set to data 1 Output No.: 00 to 07 When 06 to 11 is set to data 1 Camera No.: 00 to 01

Receive Data Word Allocation (3rd Operand of PMCR)

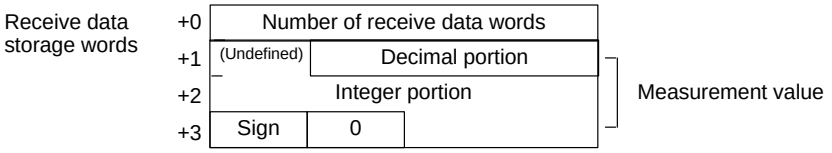

Offset	Content (data format)	Data
+0	Number of receive data words (4 digits BCD)	0004
+1 to +3	Measurement value (decimal portion) (3 digits BCD) Measurement value (integer portion) (7 digits BCD) Measurement value (sign) (1 digit)	**Example** –123.456: +3 3456, +4 0012, +5 F000 **Example** +123.456: +3 3456, +4 0012, +5 0000 F is stored for negative values.

Note 1. Only one output No. can be designated.
2. Measurement is not performed with this command. The measurement results of the last measurement will be stored in the specified words.
3. This command can acquire only the measurement value of the window No. set by output format.
4. For data 1 and 2 , the receive data is compared with the send data. If the receive data is not the same as the send data, CIO 28909 (if port A is used) or CIO 28913 (if port B is used) will turn ON.
5. The ranges of measurement values are as follows:
For calibration OFF setting : –2147483.648 to 2147483.647
For calibration ON setting : –9999999.999 to 9999999.999
6. If a measurement value exceeds the range of measurement values when calibration is turned off, unexpected data is stored in the specified words.

Measurement Execution (F300) (Sequence No. 460)

This sequence carries out one measurement and stores measurement results in the specified words

Send Data Word Allocation (2nd Operand of PMCR)

None.

Receive Data Word Allocation (3rd Operand of PMCR)

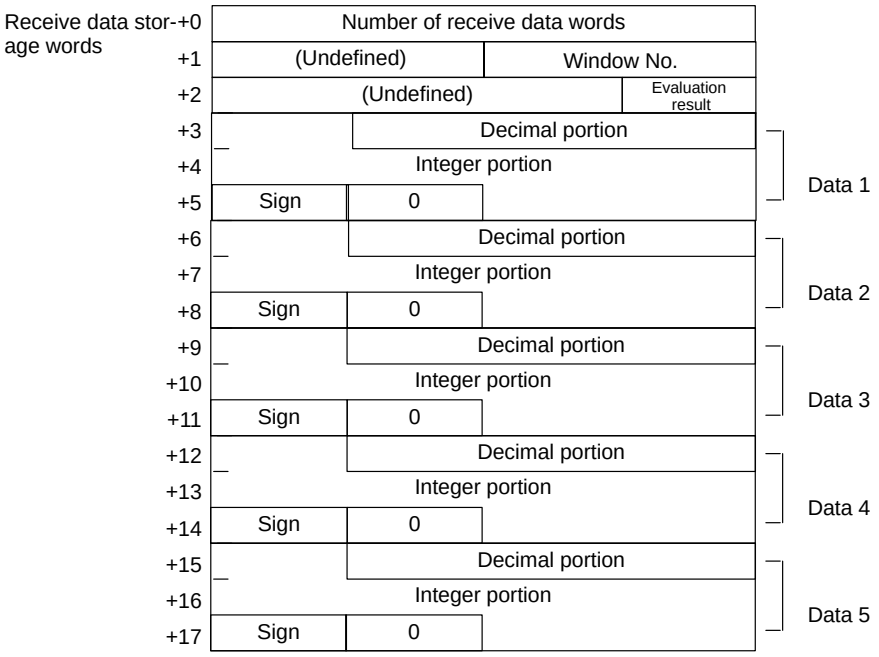

Offset	Content (data format)	Data
+0	Number of receive data words (4 digits BCD)	0006: 1 measurement item 0009: 2 measurement items 0012: 3 measurement items 0015: 4 measurement items 0018: 5 measurement items
+1	Window number (2 digits BCD)	00 to 07
+2	Evaluation result (1 digit BCD)	0: OK 1: NG
+3 to +5	Measurement value (decimal portion) (3 digits BCD) Measurement value (integer portion) (7 digits BCD) Measurement value (sign) (1 digit)	**Example** –123.456: +3 3456, +4 0012, +5 F000 **Example** +123.456: +3 3456, +4 0012, +5 0000 F is stored for negative values.
+6 to +8	Same as +3 to +5.	Same as +3 to +5.
+9 to +11	Same as +3 to +5.	Same as +3 to +5.
+12 to +14	Same as +3 to +5.	Same as +3 to +5.
+15 to +17	Same as +3 to +5.	Same as +3 to +5.

Note 1. Exponential expressions are used for numbers larger than 9999999.999 and smaller than –999999.9.

2. The number of measurement items is up to 5, but only one window number can be read.

3. The ranges of measurement values are as follows:
For calibration OFF setting :–2147483.648 to 2147483.648
For calibration ON setting : –9999999.999 to 9999999.999

4. The priority of measurement items being output are as follows:
Area
Center of gravity X, Center of gravity Y
Displacement in center of gravity X (reserved), displacement in center of gravity Y (reserved)
Main axis angle
Main axis angle aberration (reserved)
Edge angle
Edge angle (reserved)
Center X, center Y
Center X aberration (reserved), center Y aberration (reserved)
Inclination
Inclination aberration (reserved)
Intersecting point X, intersecting point Y
Intersecting point X aberration (reserved), intersecting point Y aberration (reserved)

Continuous Measurement Execution (Scan) (F300) (Sequence No. 461)

This sequence carries out continuously the settings of F300 and stores measurement results in the specified words.

Send Data Word Allocation (2nd Operand of PMCR)

None.

Receive Data Word Allocation (3rd Operand of PMCR)

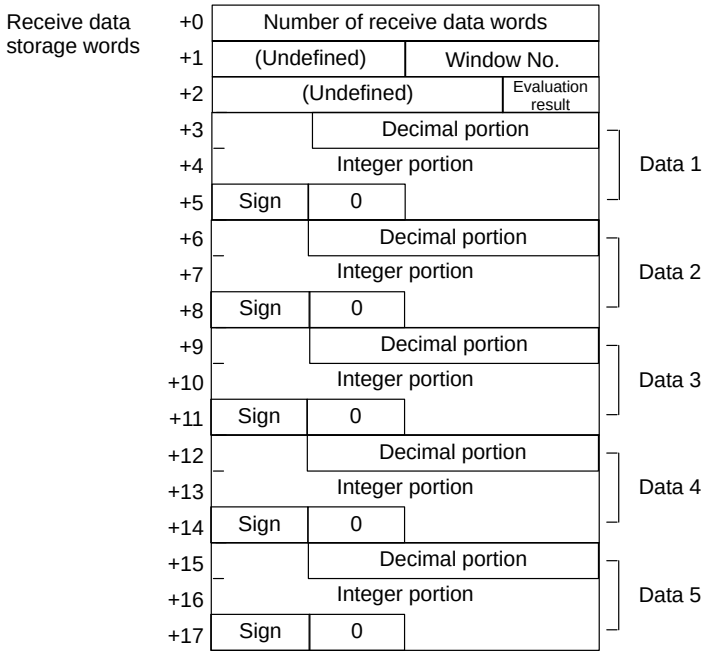

Offset	Content (data format)	Data
+0	Number of receive data words (4 digits BCD)	0006: 1 measurement item 0009: 2 measurement items 0012: 3 measurement items 0015: 4 measurement items 0018: 5 measurement items
+1	Window No. (2 digits BCD)	00 to 07
+2	Evaluation result (1 digit BCD)	0: OK 1: NG
+3 to +5	Measurement value (decimal portion) (3 digits BCD) Measurement value (integer portion) (7 digits BCD) Measurement value (sign) (1 digit)	**Example** –123.456 +3: 3456 +4: 0012 +5: F000 **Example** +123.456 +3: 3456 +4: 0012 +5: 0000 F is stored for negative values.
+6 to +8	Same as +3 to +5.	Same as +3 to +5.
+9 to +11	Same as +3 to +5.	Same as +3 to +5.
+12 to +14	Same as +3 to +5.	Same as +3 to +5.
+15 to +17	Same as +3 to +5.	Same as +3 to +5.

Note
1. Exponential expressions are used for numbers larger than 9999999.999 and smaller than –999999.9.
2. The number of measurement items are up to 5, but only one window number can be read.
3. The range of measurement values are as follows:
   For calibration OFF setting :–2147483.648 to 2147483.648
   For calibration ON setting : –9999999.999 to 9999999.999
4. The priority order of measurement items being output are as follows:
   Area
   Center of gravity X, Center of gravity Y
   Displacement in center of gravity X (reserved), displacement in center of gravity Y (reserved)
   Main axis angle

Main axis angle aberration (reserved)
Edge angle
Edge angle (reserved)
Center X, center Y
Center X displacement (reserved), center Y displacement (reserved)
Inclination
Inclination displacement (reserved)
Intersecting point X, intersecting point Y
Intersecting point X displacement (reserved), intersecting point Y displacement (reserved)

Continuous Measurement Execution (Interrupt) (F300) (Sequence No. 462)

This sequence carries out continuously setting the F300 and stores measurement results in the specified words. The interrupt notification method is used for the receive data. The interrupt No. is 102.

Send Data Word Allocation (2nd Operand of PMCR)

None.

Receive Data Word Allocation (3rd Operand of PMCR)

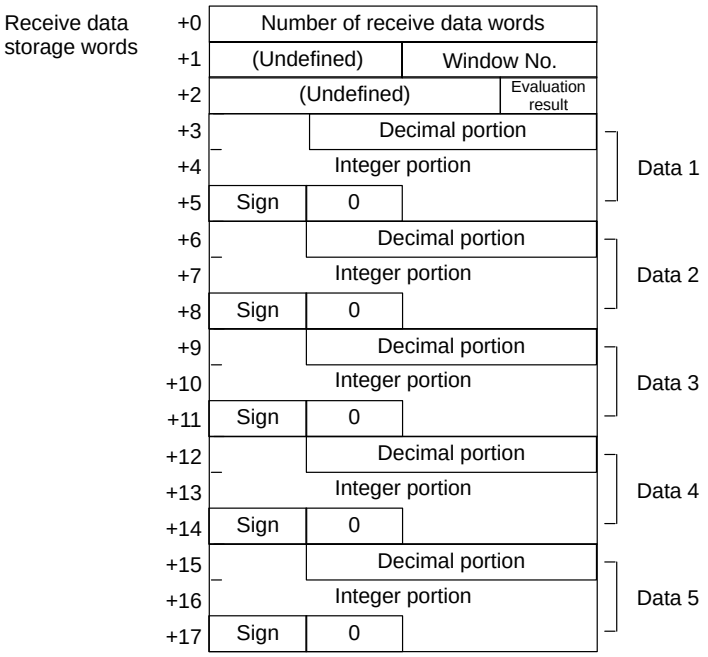

Offset	Content (data format)	Data
+0	Number of receive data words (4 digits BCD)	0006: 1 measurement item 0009: 2 measurement items 0012: 3 measurement items 0015: 4 measurement items 0018: 5 measurement items
+1	Window No. (2 digits BCD)	00 to 07
+2	Evaluation result (1 digit BCD)	0: OK 1: NG
+3 to +5	Measurement value (decimal portion) (3 digits BCD) Measurement value (integer portion) (7 digits BCD) Measurement value (sign) (1 digit)	**Example** –123.456 +3: 3456 +4: 0012 +5: F000 **Example** +123.456 +3: 3456 +4: 0012 +5: 0000 F is stored for negative values.
+6 to +8	Same as +3 to +5.	Same as +3 to +5.
+9 to +11	Same as +3 to +5.	Same as +3 to +5.
+12 to +14	Same as +3 to +5.	Same as +3 to +5.
+15 to +17	Same as +3 to +5.	Same as +3 to +5.

Note
1. Exponential expressions are used for numbers larger than 9999999.999 and smaller than –999999.9.
2. The number of measurement items is up to 5, but only one window number can be read.
3. The ranges of measurement values are as follows:
   For calibration OFF setting :–2147483.648 to 2147483.648
   For calibration ON setting : –9999999.999 to 9999999.999
4. The priority of measurement items being output are as follows:
   Area
   Center of gravity X, Center of gravity Y
   Displacement in center of gravity X (reserved), displacement in center of gravity Y (reserved)
   Main axis angle
   Main axis angle displacement (reserved)
   Edge angle
   Edge angle(reserved)
   Center X, center Y
   Center X displacement (reserved), center Y displacement (reserved)
   Inclination
   Inclination displacement (reserved)
   Intersecting point X, intersecting point Y
   Intersecting point X displacement (reserved), intersecting point Y displacement (reserved)

Reference Object Registration Command 1 Execution (F300) (Sequence No. 463)

This sequence performs a measurement for the input image and updates reference object data of the full window.

Send Data Word Allocation (2nd Operand of PMCR)

None.

Receive Data Word Allocation (3rd Operand of PMCR)

None.

Reference Object Registration Command 2 Execution (F300) (Sequence No. 464)

This sequence performs a measurement for the input image and updates the reference object data of a designated window.

Send Data Word Allocation (2nd Operand of PMCR)

First word of send data			
+0	Number of send data words		
+1	(Undefined)	Window No.	

Offset	Contents (data format)	Data
+0	Number of send data words (4 digits BCD)	0002
+1	Window No. (2 digits BCD)	00 to 07

Receive Data Word Allocation (3rd Operand of PMCR)

None.

Illumination Fluctuation Follow Execution (F300) (Sequence No. 465)

This sequence executes an illumination fluctuation follow.

Send Data Word Allocation (2nd Operand of PMCR)

None.

Receive Data Word Allocation (3rd Operand of PMCR)

None.

Measurement Execution and Positioning (F350) (Sequence No. 470)

This sequence carries out one measurement and stores the measurement results in the specified words.

Send Data Word Allocation (2nd Operand of PMCR)

None.

Receive Data Word Allocation (3rd Operand of PMCR)

Receive data storage words				
+0	Number of receive data words			
+1		Decimal portion		X displacement
+2	Sign	Integer portion		
+3	–	Decimal portion		Y displacement
+4	– Sign	Integer portion		
+5		Decimal portion		Correlation value
+6	Sign	0	Integer portion	

Offset	Content (data format)	Data
+0	Number of receive data words	0007
+1 to +2	X displacement (decimal portion) (3 digits BCD) X displacement (integer portion) (3 digits BCD) X displacement (sign) (1 digit) (See note.)	**Example** –123.456: +1 3456, +2 F012 **Example** +123.456: +1 3456, +2 0012 F is stored for negative values.
+3 to +4	Y displacement (decimal portion) (3 digits BCD) Y displacement (integer portion) (3 digits BCD) Y displacement (sign) (1 digit) (See note.)	**Example** –123.456: +1 3456, +2 F012 **Example** +123.456: +1 3456, +2 0012 F is stored for negative values.
+5 to +6	Correlation value (decimal portion) (3 digits BCD) Correlation value (integer portion) (3 digits BCD) Correlation value (sign) (1 digit) (See note.)	**Example** –12.345: +1 2345, +2 F001 **Example** +12.345: +1 2345, +2 0001 F is stored for negative values.

Note 1. The number of models that can be stored in a designated word is 1.
2. If a measurement is carried out without executing a camera designation, a measurement is executed for all cameras in which the measurement model is registered.
3. When the correlation value is less than 70 and the measurement value overflows, CIO 28909 (if port A is used) or CIO 28913 (if port B is used) will turn ON.
4. Data to be output is within the range 999.999 (upper limit) to –999.999 (lower limit).
5. Retry processing is not performed for this sequence.
6. Turn the Abort Bit ON and then OFF to end this sequence.

Camera Designation and Positioning (F350) (Sequence No. 471)

This sequence designates the cameras for measurement.

Send Data Word Allocation (2nd Operand of PMCR)

First word of send data	+0	Number of send data words	
	+1	(Undefined)	First camera No.
	+2	(Undefined)	Last camera No.

Offset	Content (data format)	Data
+0	Number of send data words (4 digit BCD)	0003
+1	First camera No. (1 digit BCD)	0 to 7
+2	Last camera No. (1 digit BCD)	0 to 7

Receive Data Word Allocation (3rd Operand of PMCR)

None.

Note 1. Set values so that the first camera No.< last camera No.
2. If a designated camera No. is abnormal, CIO 28909 (if port A is used) or CIO 28913 (if port B is used) will turn ON.

Scene Switching and Positioning (F350) (Sequence No. 472)

This sequence switches to a designated scene No.

Send Data Word Allocation (2nd Operand of PMCR)

First word of send data	+0	Number of send data words	
	+1	(Undefined)	Scene No.

Offset	Contents (data format)	Data
+0	Number of send data words (4 digits BCD)	0002
+1	Scene No. (2 digits BCD)	00 to 15

Receive Data Word Allocation (3rd Operand of PMCR)

None.

Note 1. If a scene No. is abnormal, CIO 28909 (if port A is used) or CIO 28913 (if port B is used) will turn ON.
2. Retry processing is not performed for this sequence.
3. Turn the Abort Bit ON and then OFF to end this sequence.

Inspection Execution and Character Inspection (F350) (Sequence No. 473)

This sequence carries out one inspection and outputs the inspection results to a video monitor.

Send Data Word Allocation (2nd Operand of PMCR)

None.

Receive Data Word Allocation (3rd Operand of PMCR)

None.

Character String Inspection and Character Inspection (F350) (Sequence No. 474)

This sequence changes the inspection character string of a designated inspection area No. to a designated character string.

Send Data Word Allocation (2nd Operand of PMCR)

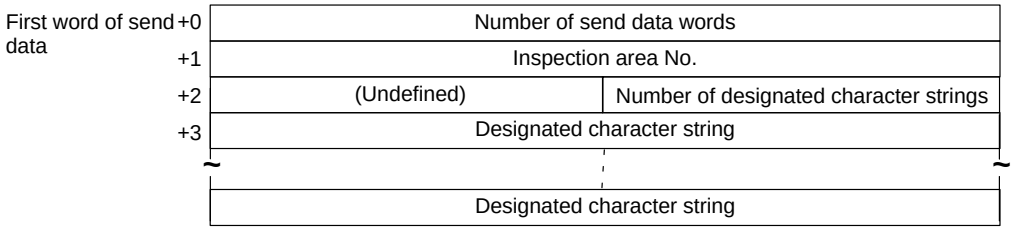

Offset	Contents (data format)	Data
+0	Number of send data words (4 digits BCD)	0004 to 0015
+1	Number of designated character strings (4 digits BCD)	0 to 24
+2	Inspection area No. (2 digits BCD)	00 to 07
+3 to	Number of designated character strings (ASCII)	

Receive Data Word Allocation (3rd Operand of PMCR)

None.

Camera Change (Decrease by 1) (F200/300) (Sequence No. 480)

This sequence decreases the display camera No. by 1.

Send Data Word Allocation (2nd Operand of PMCR)

None.

Receive Data Word Allocation (3rd Operand of PMCR)

None.

Camera Change (Increase by 1) (F200/300) (Sequence No. 481)

This sequence increases the display camera No. by 1.

Send Data Word Allocation (2nd Operand of PMCR)

None.

Receive Data Word Allocation (3rd Operand of PMCR)

None.

Binary Level Modification (F200/300) (Sequence No. 482)

This sequence modifies the binary levels (upper limit and lower limit values) of a designated output No. (F200) or window number No. (F300).

Send Data Word Allocation (2nd Operand of PMCR)

First word of send data	+0	Number of send data words		
	+1	(Undefined)	Window No.	or Output No.
	+2	(Undefined)	Upper limit value	
	+3	(Undefined)	Lower limit value	

Offset	Contents (data format)	Data
+0	Number of send data words (4 digits BCD)	0004
+1	Window No. (1 digit BCD)	0 to 7
+2	Upper limit value (3 digits BCD)	000 to 255
+3	Lower limit value (3 digits BCD)	000 to 255

Receive Data Word Allocation (3rd Operand of PMCR)

None.

Note Enter values so that the upper limit ≥ lower limit.

Reset (F200/300) (Sequence No. 483)

This sequence resets the F200/F300 (to starting status).

Send Data Word Allocation (2nd Operand of PMCR)

None.

Receive Data Word Allocation (3rd Operand of PMCR)

None.

Scene Switching (Decrease by 1) (Sequence No. 490)

This sequence decreases the scene No. by 1.

Send Data Word Allocation (2nd Operand of PMCR)

None.

Receive Data Word Allocation (3rd Operand of PMCR)

None.

Scene Switching (Increase by 1) (Sequence No. 491)

This sequence increases the scene No. by 1.

Send Data Word Allocation (2nd Operand of PMCR)

None.

Receive Data Word Allocation (3rd Operand of PMCR)

None.

Scene Switching (Arbitrary) (Sequence No. 492)

This sequence switches to a designated scene No.

Send Data Word Allocation (2nd Operand of PMCR)

First word of send data	+0	Number of send data words	
	+1	(Undefined)	Scene No.

Offset	Contents (data format)	Data
+0	Number of send data words (4 digits BCD)	0002
+1	Scene No. (2 digits BCD)	00 to 15

Receive Data Word Allocation (3rd Operand of PMCR)

None.

Measurement, Inspection Termination (Sequence No. 493)

This sequence terminates the measurement and returns to the home menu.

Send Data Word Allocation (2nd Operand of PMCR)

None.

Receive Data Word Allocation (3rd Operand of PMCR)

None.

General-purpose Command (Send) (Sequence No. 494)

This sequence can set and execute commands that are not otherwise supported. The delimiter (CR+LF) is automatically attached to the send data.

Send Data Word Allocation (2nd Operand of PMCR)

First word of send data	+0	Number of send data words	
	+1	Command length	
	+2	(Undefined)	Command
	~		~

Offset	Contents (data format)	Data
+0	Number of send data words (4 digits BCD)	003 to 0129
+1	Command length (4 digits BCD)	0001 to 0253
+2 to	Command (ASCII)	Specify ASCII data.

Receive Data Word Allocation (3rd Operand of PMCR)

None.

Note 1. The processing depends on the command.
2. For a command with a response, use sequence #495.

General-purpose Command (Send/Receive) (Sequence No. 495)

This sequence can set and execute commands that are not otherwise supported. The delimiter (CR+LF) is automatically attached to the send data.

Send Data Word Allocation (2nd Operand of PMCR)

First word of send data	+0	Number of send data words	
	+1	Command length	
	+2	(Undefined)	Command
	~		~

Offset	Contents (data format)	Data
+0	Number of send data words (4 digits BCD)	0003 to 0129
+1	Command length (4 digits BCD)	0001 to 0253
+2 to	Command (ASCII)	Specify ASCII data.

Receive Data Word Allocation (3rd Operand of PMCR)

The reception data is stored in the reception data words without the delimiter (CR+LF),

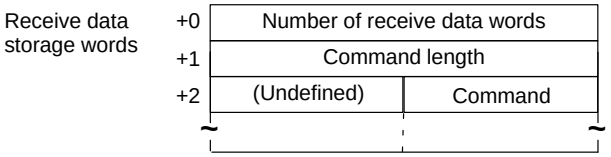

Offset	Contents (data format)	Data
+0	Number of receive data words (4 digits BCD)	
+1	Command length (4 digits BCD)	
+2 to	Command (ASCII)	ASCII data is returned.

Note 1. The processing depends on the command.

2. For a command with a response, use sequence #495.

Appendix K
V600/V620 ID Controller Protocol

The V600/V620 ID Controller Protocol is used to make various settings or control remotely the ID Controller Connected to the Communications Board via RS-232C or RS-422A cable.

Protocol Configuration

The configuration of the V600/V620 ID Controller Protocol is shown below.

Sequence No.	Communications sequence name	Function	Ladder interface	
			Send word allocation	Receive word allocation
500	Read (ASCII/1)	Used when the number of Heads to be read from the Carrier is 1.	Yes	Yes
501	Read (ASCII/2)	Used when the number of Heads to be read from the Carrier is 2.	Yes	Yes
502	Read (ASCII/4)	Used when the maximum number of Heads to be read from the Carrier is 4.	Yes	Yes
503	Read (ASCII/8)	Used when the maximum number of Heads to be read from the Carrier is 8.	Yes	Yes
504	Read (Hexadecimal/1)	Used when the number of Heads to be read from the Carrier is 1.	Yes	Yes
505	Read (Hexadecimal/2)	Used when the number of Heads to be read from the Carrier is 2.	Yes	Yes
506	Read (Hexadecimal/4)	Used when the maximum number of Heads to be read from the Carrier is 4.	Yes	Yes
507	Read (Hexadecimal/8)	Used when the maximum number of Heads to be read from the Carrier is 8.	Yes	Yes
508	Auto-read (ASCII/1)	Used when the number of Heads to be read from the Carrier is 1.	Yes	Yes
509	Auto-read (Hexadecimal/1)	Used when the number of Heads to be read from the Carrier is 1.	Yes	Yes
510	Polling Auto-read (ASCII)	Used when the number of Heads to be read from the Carrier is from 1 to 8.	Yes	No
511	Polling Auto-read Subcommand (ASCII/2)	Used when the number of Heads to be read from the Carrier is 2.	Yes	Yes
512	Polling Auto-read Subcommand (ASCII/4)	Used when the maximum number of Heads to be read from the Carrier is 4.	Yes	Yes
513	Polling Auto-read Subcommand (ASCII/8)	Used when the maximum number of Heads to be read from the Carrier is 8.	Yes	Yes
514	Polling Auto-read (Hexadecimal)	Used when the number of Heads to be read from the Carrier is from 1 to 8.	Yes	No
515	Polling Auto-read Subcommand (Hexadecimal/2)	Used when the number of Heads to be read from the Carrier is 2.	Yes	Yes
516	Polling Auto-read Subcommand (Hexadecimal/4)	Used when the maximum number of Heads to be read from the Carrier is 4.	Yes	Yes
517	Polling Auto-read Subcommand (Hexadecimal/8)	Used when the maximum number of Heads to be read from the Carrier is 8.	Yes	Yes
518	Write (ASCII/1)	Used when the number of Heads to be written to the Carrier is 1.	Yes	No

Sequence No.	Communications sequence name	Function	Ladder interface	
			Send word allocation	Receive word allocation
519	Write (ASCII/2)	Used when the number of Heads to be written to the Carrier is 2.	Yes	No
520	Write (ASCII/4)	Used when the maximum number of Heads to be written to the Carrier is 4.	Yes	No
521	Write (ASCII/8)	Used when the maximum number of Heads to be written to the Carrier is 8.	Yes	No
522	Write (Hexadecimal/1)	Used when the number of Heads to be written to the Carrier is 1.	Yes	No
523	Write (Hexadecimal/2)	Used when the number of Heads to be written to the Carrier is 2.	Yes	No
524	Write (Hexadecimal/4)	Used when the maximum number of Heads to be written to the Carrier is 4.	Yes	No
525	Write (Hexadecimal/8)	Used when the maximum number of Heads to be written to the Carrier is 8.	Yes	No
526	Auto-write (ASCII/1)	Used when the number of Heads to be written to the Carrier is 1.	Yes	No
527	Auto-write (Hexadecimal/1)	Used when the number of Heads to be written to the Carrier is 1.	Yes	No
528	Polling Auto-write (ASCII/2)	Used when the number of Heads to be written to the Carrier is 2.	Yes	No
529	Polling Auto-write Subcommand (ASCII/2)	Used when the number of Heads to be written to the Carrier is 2.	Yes	No
530	Polling Auto-write (ASCII/4)	Used when the maximum number of Heads to be written to the Carrier is 4.	Yes	No
531	Polling Auto-write Subcommand (ASCII/4)	Used when the maximum number of Heads to be written to the Carrier is 4.	Yes	No
532	Polling Auto-write (ASCII/8)	Used when the maximum number of Heads to be written to the Carrier is 8.	Yes	No
533	Polling Auto-write Subcommand (ASCII/8)	Used when the maximum number of Heads to be written to the Carrier is 8.	Yes	No
534	Polling Auto-write (Hexadecimal/2)	Used when the number of Heads to be written to the Carrier is 2.	Yes	No
535	Polling Auto-write Subcommand (Hexadecimal/2)	Used when the number of Heads to be written to the Carrier is 2.	Yes	No
536	Polling Auto-write (Hexadecimal/4)	Used when the maximum number of Heads to be written to the Carrier is 4.	Yes	No
537	Polling Auto-write Subcommand (Hexadecimal/4)	Used when the maximum number of Heads to be written to the Carrier is 4.	Yes	No
538	Polling Auto-write (Hexadecimal/8)	Used when the maximum number of Heads to be written to the Carrier is 8.	Yes	No
539	Polling Auto-write Subcommand (Hexadecimal/8)	Used when the maximum number of Heads to be written to the Carrier is 8.	Yes	No
540	Data check	Writes and verify the CRC code for the check blocks designated by the user.	Yes	Yes
541	Control management	Performs I/O or an I/O read.	Yes	Yes
542	Error information read	Reads information from the latest error log.	Yes	Yes
543	Command processing cancel	Cancels command processing except polling command processing and returns to the command waiting status.	Yes	Yes

Sequence No.	Communications sequence name	Function	Ladder interface	
			Send word allocation	Receive word allocation
544	Polling auto-read command processing cancel	Cancels polling auto-read processing.	Yes	Yes
545	Polling auto-write command processing cancel	Cancels polling auto-write processing.	Yes	Yes
546	General-purpose command	Sends arbitrary data and stores receive data to receive data words.	Yes	Yes

Note Ladder Interface Settings

YES: User settings are required for the 2nd and 3rd operands of PMCR.

NO: Send word allocation: Set a dummy word address for the 3rd operand (D).
Receive word allocation: Set the constant 0000 for the 2rd operand (S).

Connections

Connections when using the V600/V620 ID Controller Protocol are shown below.

RS-232C Connections

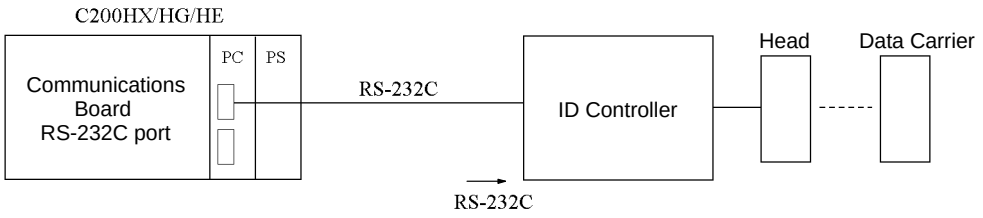

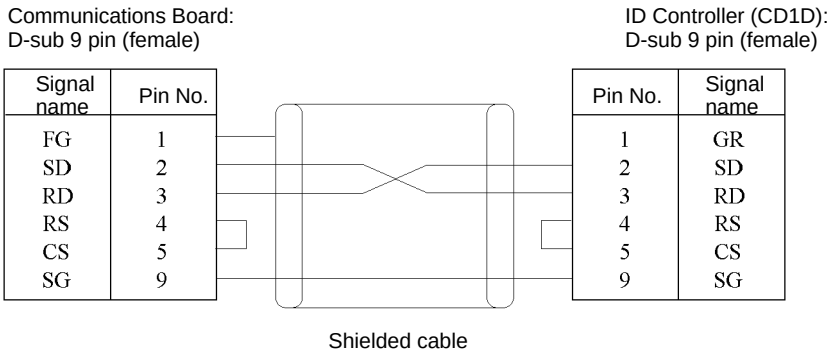

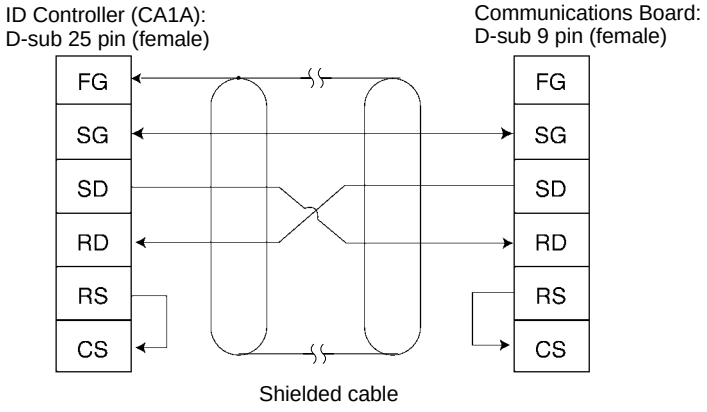

RS-422A Connections

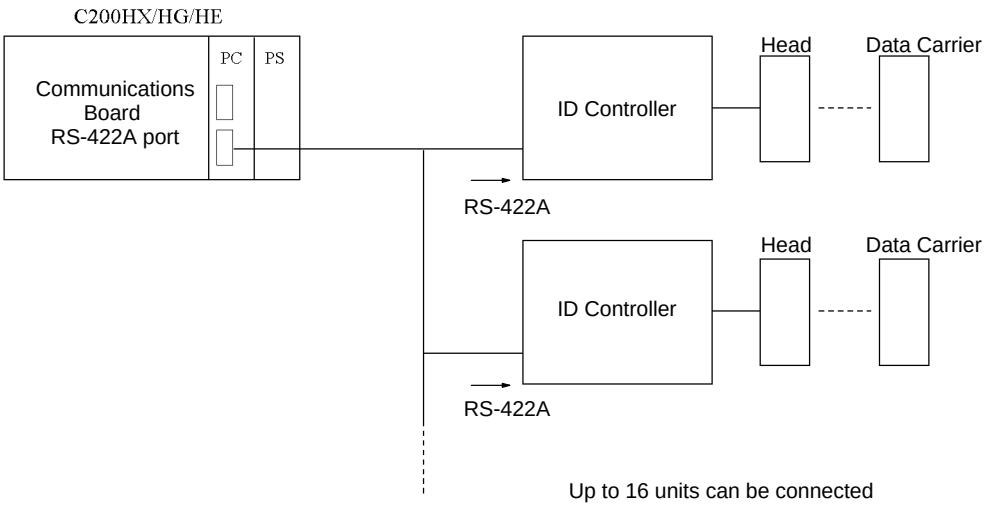

Communications Board:
D-sub 9 pin (female)

Signal name	Pin No.
RDB	8
SDB	2
RDA	6
SDA	1

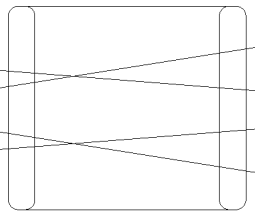

ID Controller (CD1D):
D-sub 9 pin (female)

Pin No.	Signal name
1	RDB
3	SG
5	SDB
6	RDA
7	FG
9	SDA

Shielded cable

Note 1. Ground the cable shield at either the ID Controller or the Communications Board to prevent malfunction.

2. Turn ON the pin 6 on DIP switch SW6 to set the host communications procedure to the 1-to-N procedure for 1-to-N connections.

DIP Switch Settings

V600/620-CD1D DIP Switches

DIP Switch 1

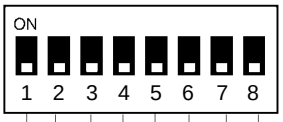

Not used (Always keep it OFF.)

SW7	Local communications mode setting
1	Speed priority setting
0	Distance priority setting

- SW7 Setting
  This setting is only valid if the EEPROM-type (batteryless-type) Data Carrier (DC) is accessed. The setting of SW7 does not work with the SRAM-type (battery-type) DC. SW7 must be set to OFF when the V620 is used.

SW4	SW5	SW6	Data length (bit)	STOP bits (bit)	Parity type
0	0	0	7	2	E
0	0	1	7	2	O
0	1	0	7	1	E
0	1	1	7	1	O
1	0	0	8	2	N
1	0	1	8	1	N
1	1	0	8	1	E
1	1	1	8	1	O

SW2	SW3	Baud rate (bps)
0	0	2400
0	1	4800
1	0	9600
1	1	19,200

SW1	Display mode
0	Error display mode
1	I/O display mode

DIP Switch 2

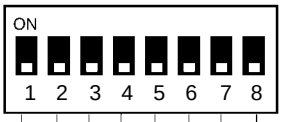

Not used (Always keep it OFF.)

SW6	Communications protocol setting with host devices
1	1-to-N protocol
0	1-to-1 protocol

Note When selecting the “1-to-N” protocol, setting is limited to N=1. In this case, the FCS check code may be added.

- ID Controller Unit Number Setting (Valid Only for 1-to-N Protocol)

SW3	SW4	SW5	Unit No.
0	0	0	No. 0
0	0	1	No. 1
0	1	0	No. 2
0	1	1	No. 3
1	0	0	No. 4
1	0	1	No. 5
1	1	0	No. 6
1	1	1	No. 7

Note
1. Be careful not to set to the same unit number twice.
2. Set them to OFF for the 1-to-1 protocol.

SW1	SW2	Synchronous condition
0	0	OFF (LL level)
0	1	ON (HL level)
1	0	Trailing edge
1	1	Leading edge

V600-CA□A DIP Switches

DIP Switch 1

Mode 1

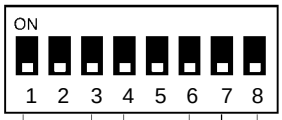

Note Factory Setting: All OFF

- Baud Rate Setting

SW1	SW2	SW3	Baud rate (bps)
0	1	1	1200
1	0	0	2400
1	0	1	4800
1	1	0	9600
1	1	1	19200

1=ON, 0=OFF

SW7 and SW8: Be sure to set to OFF.

- Communications Format

SW4	SW5	SW6	Data length (bit)	STOP bit (bit)	Parity type
0	0	0	7	2	E
0	0	1	7	2	O
0	1	0	7	1	E
0	1	1	7	1	O
1	0	0	8	2	N
1	0	1	8	1	N
1	1	0	8	1	E
1	1	1	8	1	O

1=ON, 0=OFF (See note 1) (See note 2)

Note 1. Data length setting
7 bits: ASCII code
8 bits: JIS8 unit code

2. Parity setting
E: Even parity
O: Odd parity
N: No parity designation

DIP Switch 2

MODE2

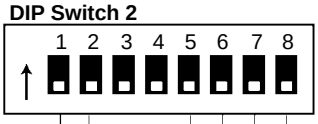

- SW8: Receive Side Terminal Resistance Setting (Valid Only for the V600-CA2A)

1	Connected (ID Controller send side)
0	Not connected

- SW7: Receive Side Terminal Resistance Setting (Valid Only for the V600-CA2A)

1	Connected (ID Controller receive side)
0	Not connected

- SW6: Communications Protocol Setting

1	1-to-N protocol
0	1-to-1 protocol

- ID Controller Unit Number Setting (Valid Only for the 1-to-N Protocol)

SW2	SW3	SW4	SW5	Unit No.
0	0	0	0	No. 0
0	0	0	1	No. 1
0	0	1	0	No. 2
0	0	1	1	No. 3
0	1	0	0	No. 4
0	1	0	1	No. 5
0	1	1	0	No. 6
0	1	1	1	No. 7
1	0	0	0	No. 8
1	0	0	1	No. 9
1	0	1	0	No. 10
1	0	1	1	No. 11
1	1	0	0	No. 12
1	1	0	1	No. 13
1	1	1	0	No. 14
1	1	1	1	No. 15

Note 1. Be careful not to set to the same unit number twice.
2. Set them to OFF for the 1-to-1 protocol.

- Local Communications Mode Setting

1	Speed priority setting
0	Distance priority setting

- SW1 Setting
This setting is only valid if the EEPROM-type (battery-less-type) Data Carrier (DC) is accessed. The setting of SW7 does not work with the SRAM-type (battery-type) DC.

- SW6 Setting
When selecting the 1-to-N protocol for the V600-CA1A/RS-232C interface, the setting is limited to N=1. In this case, the FCS check code may be added.

Read (ASCII/1) (Sequence No. 500)

This sequence is used when the number of Heads to be read from the Carrier is 1.

Send Data Word Allocation (2nd Operand of PMCR)

First word of send data			
+0	Number of send data words		
+1	(Undefined)	Unit No.	
+2	(Undefined)	Head CH No.	
+3	Leading address No.		
+4	(Undefined)	Read bytes	

Offset	Contents (data format)	Data
+0	Number of send data words (4 digits BCD)	0005 (fixed)
+1	Unit No. (2 digits BCD)	00 to 07 (CD1D) 00 to 15 (CA□A)
+2	R/W Head channel (CH) No. (1 digit BCD)	R/W Head CH 1 designation: 1 R/W Head CH 2 designation: 2 The CD1D must be set to 1.
+3	Leading address No. (4 digits Hexadecimal)	0000 to FFFF
+4	Read bytes (2 digits Hexadecimal)	01 to F4 (1 to 244 bytes)

Receive Data Word Allocation (3rd Operand of PMCR)

Receive data storage words	
+0	Number of receive data words
+1	Read data
+2	Read data
~	~
+122	Read data

Offset	Contents (data format)	Data
+0	Number of receive data words (4 digits BCD)	0002 to 0123
+1 to +122	Read data (ASCII)	Number of read bytes stored in ASCII

Note Data from Data Carriers designated for ASCII is stored beginning with the smallest offset from the receive data words.

Read (ASCII/2) (Sequence No. 501)

This sequence is used when the number of Heads to be read from the Carrier is 2. Up to 118 bytes of data can be read for each Read/Write Head.

Send Data Word Allocation (2nd Operand of PMCR)

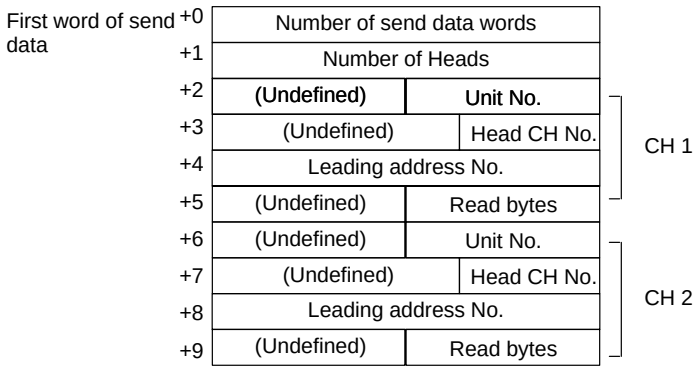

Offset	Contents (data format)	Data
+0	Number of send data words (4 digits BCD)	0006 to 0010
+1	Number of Heads (4 digits BCD)	0001 to 0002
+(4(N–1)+2)	Unit No. (2 digits BCD)	Arbitrary (However, there is a limit for the maximum Unit No. depending on the model)
+(4(N–1)+3)	R/W Head CH No. (1 digit BCD)	R/W Head CH 1 designation: 1 R/W Head CH 2 designation: 2 The CD1D must be set to 1.
+(4(N–1)+4)	Leading address No. (4 digits Hexadecimal)	0000 to FFFF
+(4(N–1)+5)	Read bytes (2 digits Hexadecimal)	01 to 76 (1 to 118 bytes)

N: Number of Heads

Receive Data Word Allocation (3rd Operand of PMCR)

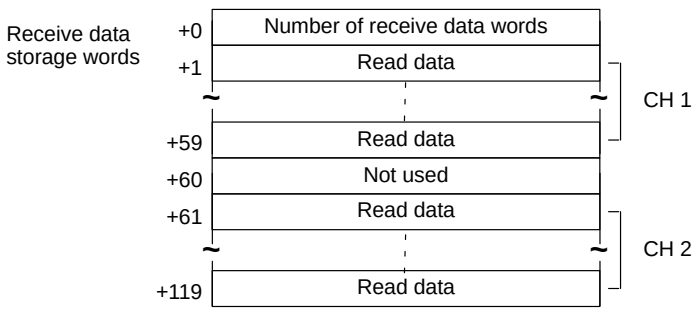

Offset	Contents (data format)	Data
+0	Number of receive data words (4 digits BCD)	0002 to 0120
+(60(N–1)+1) to +(60(N–1)+59)	Read data (ASCII)	Number of read bytes store in ASCII

N: Number of Heads

Note Data from Data Carriers designated for ASCII is stored beginning with the smallest offset from the receive data words.

Read (ASCII/4) (Sequence No. 502)

This sequence is used when the maximum number of Heads to be read from the Carrier is 4. Up to 48 bytes of data can be read for each Read/Write Head.

Send Data Word Allocation (2nd Operand of PMCR)

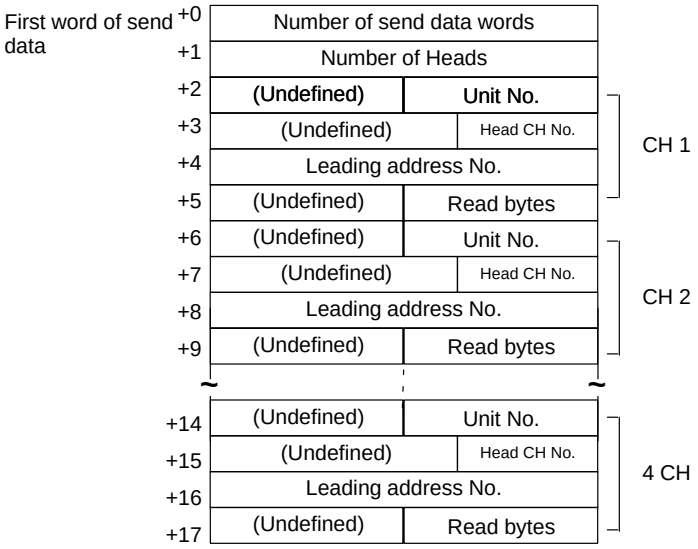

Offset	Contents (data format)	Data
+0	Number of send data words (4 digits BCD)	0006 to 0018
+1	Number of Heads (4 digits BCD)	0001 to 0004
+(4(N–1)+2)	Unit No. (2 digits BCD)	Arbitrary (However, there is a limit for the maximum Unit No. depending on the model)
+(4(N–1)+3)	R/W Head CH No. (1 digit BCD)	R/W Head CH 1 designation: 1 R/W Head CH 2 designation: 2 The CD1D must be set to 1.
+(4(N–1)+4)	Leading address No. (4 digits Hexadecimal)	0000 to FFFF
+(4(N–1)+5)	Read bytes (2 digits Hexadecimal)	01 to 30 (1 to 48 bytes)

N: Number of Heads

Receive Data Word Allocation (3rd Operand of PMCR)

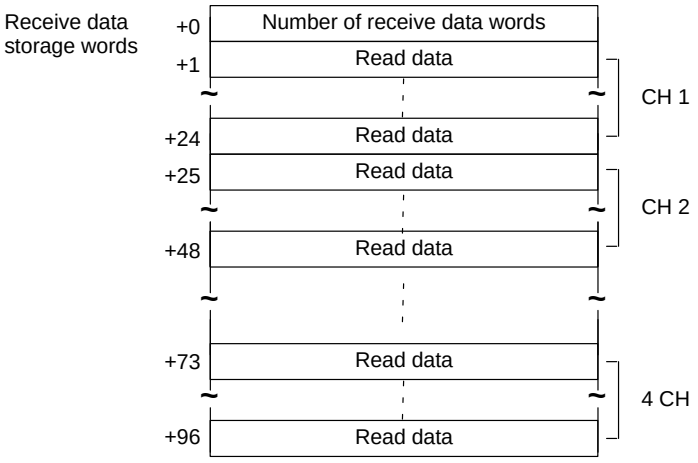

Offset	Contents (data format)	Data
+0	Number of receive data words (4 digits BCD)	0002 to 0097
+(24(N–1)+1) to +(24(N–1)+24)	Read data (ASCII)	Number of read bytes stored in ASCII

N: Number of Heads

Note Data from Data Carriers designated for ASCII is stored beginning with the smallest offset from the receive data words.

Read (ASCII/8) (Sequence No. 503)

This sequence is used when the maximum number of Heads to be read from the Carrier is 8. Up to 20 bytes of data can be read for each Read/Write Head.

Send Data Word Allocation (2nd Operand of PMCR)

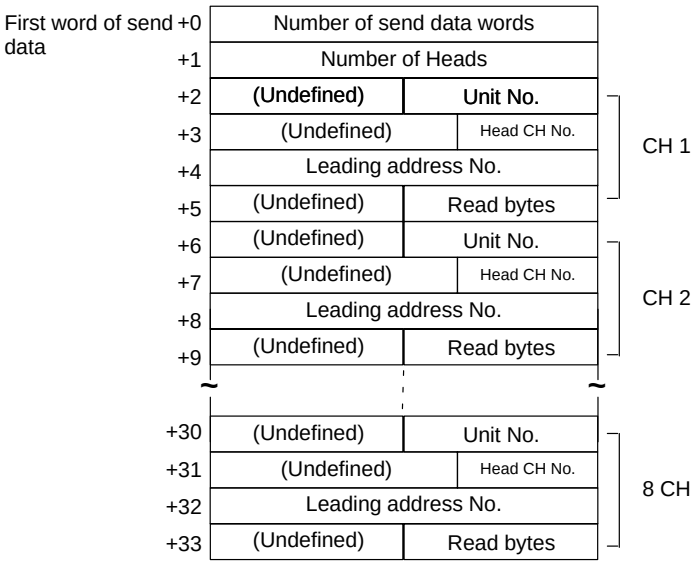

Offset	Contents (data format)	Data
+0	Number of send data words (4 digits BCD)	0006 to 0034
+1	Number of Heads (4 digits BCD)	0001 to 0008
+(4(N–1)+2)	Unit No. (2 digits BCD)	Arbitrary (However, there is a limit for the maximum Unit No. depending on the model)
+(4(N–1)+3)	R/W Head CH No. (1 digit BCD)	R/W Head CH 1 designation: 1 R/W Head CH 2 designation: 2 The CD1D must be set to 1.
+(4(N–1)+4)	Leading address No. (4 digits Hexadecimal)	0000 to FFFF
+(4(N–1)+5)	Read bytes (2 digits Hexadecimal)	01 to 14 (1 to 20 bytes)

N: Number of Heads

Receive Data Word Allocation (3rd Operand of PMCR)

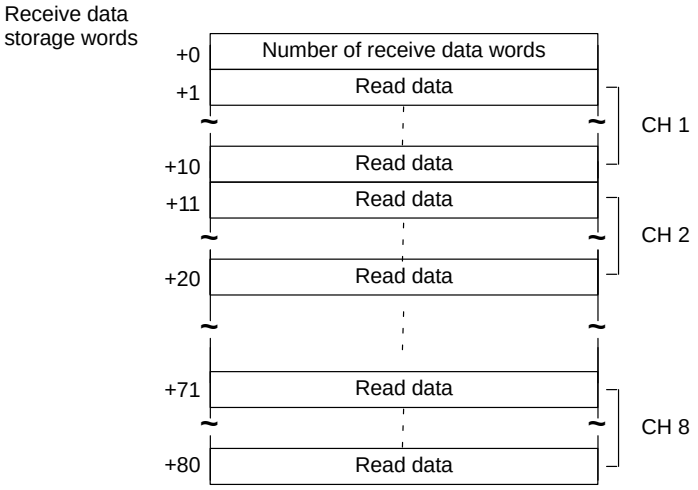

Offset	Contents (data format)	Data
+0	Number of receive data words (4 digits BCD)	0002 to 0081
+(10(N–1)+1) to +(10(N–1)+10)	Read data (ASCII)	Number of read bytes stored in ASCII

N: Number of Heads

Note Data from Data Carriers designated for ASCII is stored beginning with the smallest offset from the receive data words.

Read (Hexadecimal/1) (Sequence No. 504)

This sequence is used when the number of Heads to be read from the Carrier is 1.

Send Data Word Allocation (2nd Operand of PMCR)

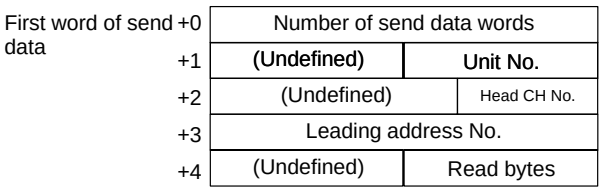

Offset	Contents (data format)	Data
+0	Number of send data words (4 digits BCD)	0005 (fixed)
+1	Unit No. (2 digits BCD)	00 to 07 (CD1D) 00 to 15 (CA□A)
+2	R/W Head CH No. (1 digit BCD)	R/W Head CH 1 designation: 1 R/W Head CH 2 designation: 2 The CD1D must be set to 1.
+3	Leading address No. (4 digits Hexadecimal)	0000 to FFFF
+4	Read bytes (2 digits Hexadecimal)	01 to 7A (1 to 122 bytes)

Receive Data Word Allocation (3rd Operand of PMCR)

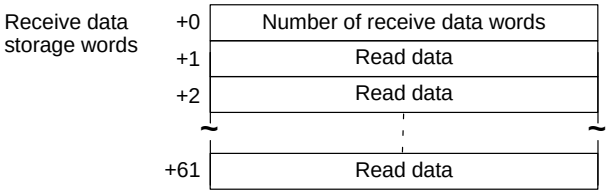

Offset	Contents (data format)	Data
+0	Number of receive data words (4 digits BCD)	0002 to 0062
+1 to +61	Read data (Hexadecimal)	Number of read bytes stored in hexadecimal data

Note Data for Data Carriers designated for hexadecimal is stored beginning with the largest offset from the receive data words.

Read (Hexadecimal/2) (Sequence No. 505)

This sequence is used when the maximum number of Heads to be read from the Carrier is 2. Up to 60 bytes of data can be read for each Read/Write Head.

Send Data Word Allocation (2nd Operand of PMCR)

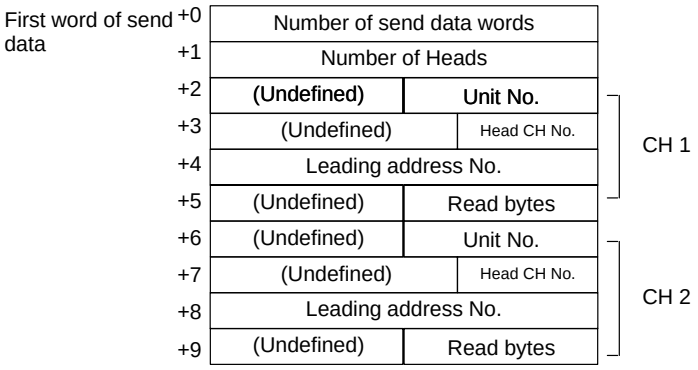

Offset	Contents (data format)	Data
+0	Number of send data words (4 digits BCD)	0006 to 0010
+1	Number of Heads (4 digits BCD)	0001 to 0002
+(4(N–1)+2)	Unit No. (2 digits BCD)	Arbitrary (However, there is a limit for the maximum Unit No. depending on the model)
+(4(N–1)+3)	R/W Head CH No. (1 digit BCD)	R/W Head CH 1 designation: 1 R/W Head CH 2 designation: 2 The CD1D must be set to 1.
+(4(N–1)+4)	Leading address No. (4 digits Hexadecimal)	0000 to FFFF
+(4(N–1)+5)	Read bytes (2 digits Hexadecimal)	01 to 3C (1 to 60 bytes)

N: Number of Heads

Receive Data Word Allocation (3rd Operand of PMCR)

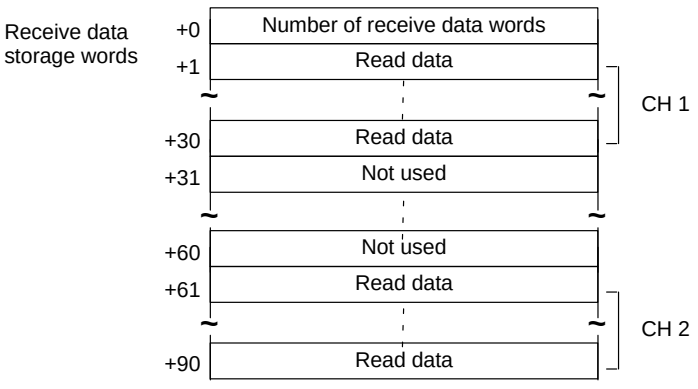

Offset	Contents (data format)	Data
+0	Number of receive data words (4 digits BCD)	0002 to 0091
+(60(N–1)+1) to +(60(N–1)+30)	Read data (Hexadecimal)	Number of read bytes stored in hexadecimal code

N: Number of Heads

Note Data for Data Carriers designated for hexadecimal is stored beginning with the largest offset from the receive data words.

Read (Hexadecimal/4) (Sequence No. 506)

This sequence is used when the maximum number of Heads to be read from the Carrier is 4. Up to 24 bytes of data can be read for each Read/Write Head.

Send Data Word Allocation (2nd Operand of PMCR)

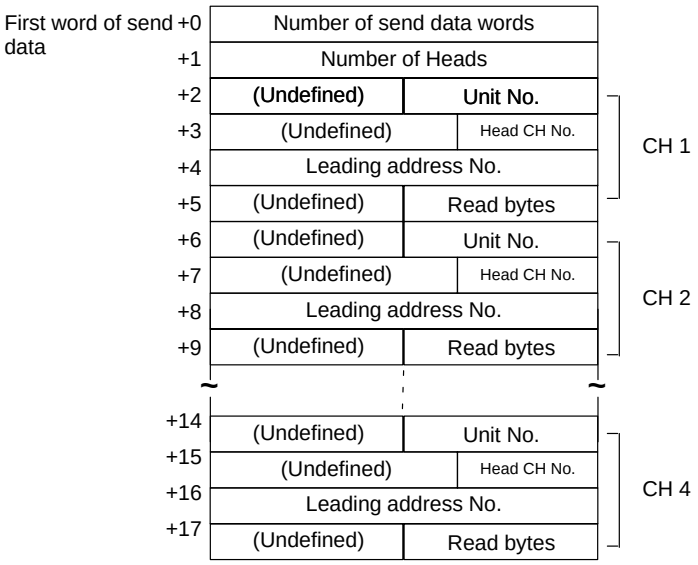

Offset	Contents (data format)	Data
+0	Number of send data words (4 digits BCD)	0006 to 0018
+1	Number of Heads (4 digits BCD)	0001 to 0004
+(4(N–1)+2)	Unit No. (2 digits BCD)	Arbitrary (However, there is a limit for the maximum Unit No. depending on the model)
+(4(N–1)+3)	R/W Head CH No. (1 digit BCD)	R/W Head CH 1 designation: 1 R/W Head CH 2 designation: 2 The CD1D must be set to 1.
+(4(N–1)+4)	Leading address No. (4 digits Hexadecimal)	0000 to FFFF
+(4(N–1)+5)	Read bytes (2 digits Hexadecimal)	01 to 18 (1 to 24 bytes)

N: Number of Heads

Receive Data Word Allocation (3rd Operand of PMCR)

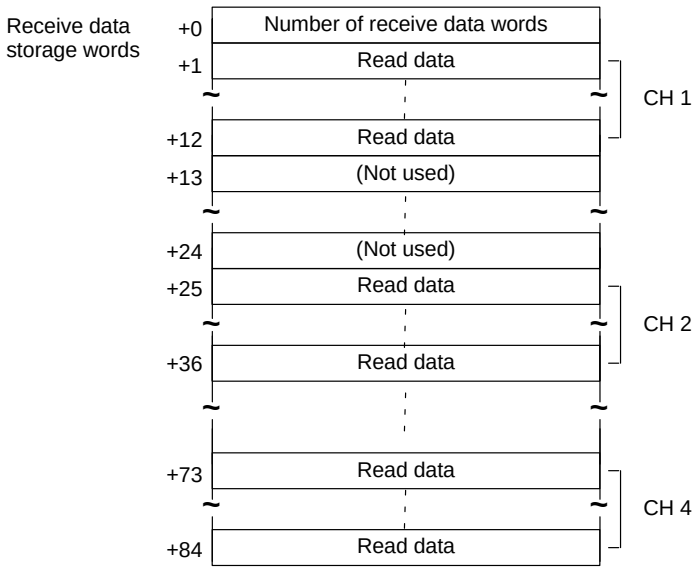

Offset	Contents (data format)	Data
+0	Number of receive data words (4 digits BCD)	0002 to 0085
+(24(N–1)+1) to +(24(N–1)+12)	Read data (Hexadecimal)	Number of read bytes stored in hexadecimal data

Note Data for Data Carriers designated for hexadecimal is received beginning with the largest offset from the receive data words.

Read (Hexadecimal/8) (Sequence No. 507)

This sequence is used when the maximum number of Heads to be read from the Carrier is 8. Up to 10 bytes of data can be read for each Read/Write Head.

Send Data Word Allocation (2nd Operand of PMCR)

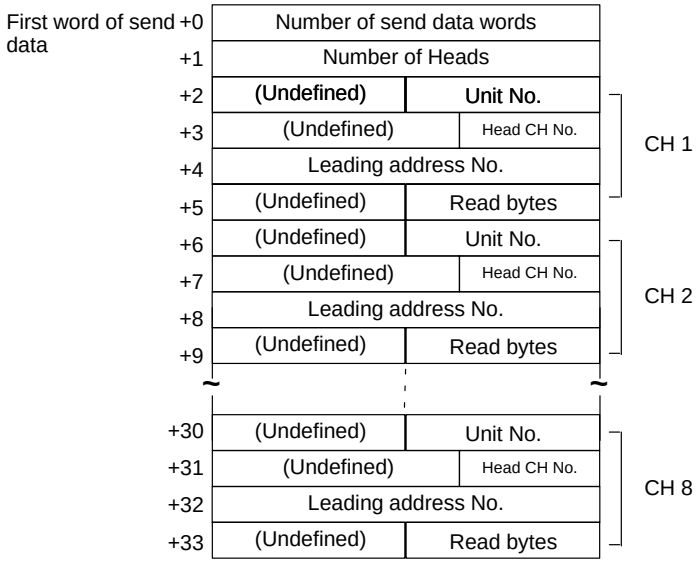

Offset	Contents (data format)	Data
+0	Number of send data words (4 digits BCD)	0006 to 0034
+1	Number of Heads (4 digits BCD)	0001 to 0008
+(4(N–1)+2)	Unit No. (2 digits BCD)	Arbitrary (However, there is a limit for the maximum Unit No. depending on the model)
+(4(N–1)+3)	R/W Head CH No. (1 digit BCD)	R/W Head CH 1 designation: 1 R/W Head CH 2 designation: 2 The CD1D must be set to 1.
+(4(N–1)+4)	Leading address No. (4 digits Hexadecimal)	0000 to FFFF
+(4(N–1)+5)	Read bytes (2 digits Hexadecimal)	01 to 0A (1 to 10 bytes)

N: Number of Heads

Receive Data Word Allocation (3rd Operand of PMCR)

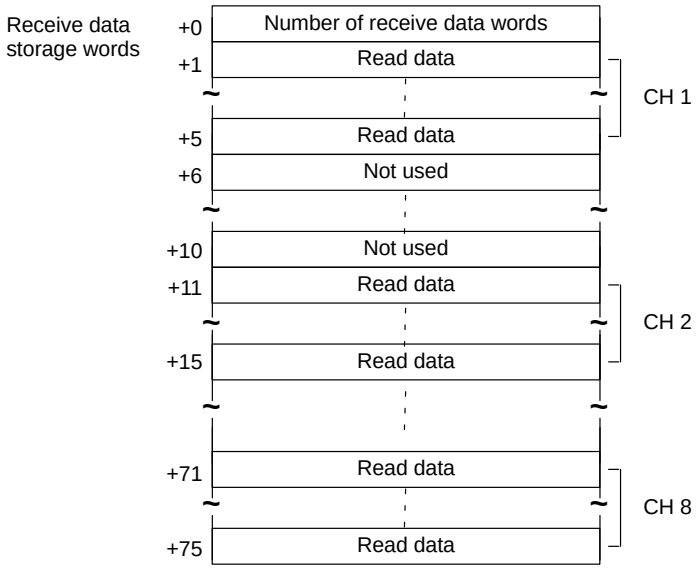

Offset	Contents (data format)	Data
+0	Number of receive data words (4 digits BCD)	0002 to 0076
+(10(N–1)+1) to +(10(N–1)+5)	Read data (CH 1) (Hexadecimal)	Number of read bytes stored in hexadecimal data

N: Number of Heads

Note Data for Data Carriers designated for hexadecimal is sent beginning with the largest offset from the receive data words.

Auto-read (ASCII/1) (Sequence No. 508)

This sequence is used when the maximum number of Heads to be read from the Carrier is 1.

Send Data Word Allocation (2nd Operand of PMCR)

The send data word allocation is similar to that of Sequence No. 500 (Read (ASCII/1)).

Receive Data Word Allocation (3rd Operand of PMCR)

The receive data word allocation is similar to that of Sequence No. 500 (Read (ASCII/1)).

Note For auto-read (AR), a response is not returned if the number of Heads is not read by the Carrier, the Abort Bit must be turned OFF to terminate the sequence.

Auto-read (Hexadecimal/1) (Sequence No. 509)

This sequence is used when the maximum number of Heads to be read from the Carrier is 1.

Send Data Word Allocation (2nd Operand of PMCR)

The send data word allocation is similar to that of Sequence No. 504 (Read (Hexadecimal/1)).

Receive Data Word Allocation (3rd Operand of PMCR)

The receive data word allocation is similar to that of Sequence No. 504 (Read (Hexadecimal/1)).

Note For auto-read (AR), a response is not returned if the number of Heads is not read by the Carrier, the Abort Bit must be turned OFF to terminate the sequence.

Polling Auto-read (ASCII) (Sequence No. 510)

This sequence is used when the number of Heads to be read from the Carrier is from 1 to 8.

Send Data Word Allocation (2nd Operand of PMCR)

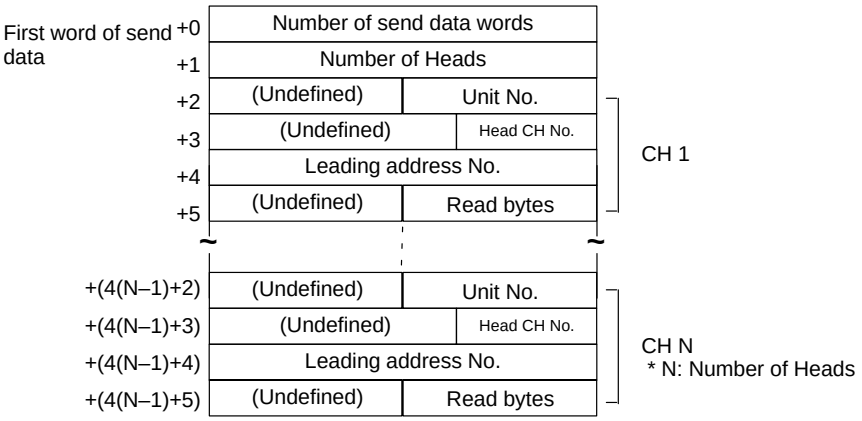

Offset	Contents (data format)	Data
+0	Number of send data words (4 digits BCD)	0006 to 0034
+1	Number of Heads (4 digits BCD)	0001 to 0008
+(4(N–1)+2)	Unit No. (2 digits BCD)	Arbitrary (However, there is a limit for the maximum Unit No. depending on the model)
+(4(N–1)+3)	R/W Head CH No. (1 digit BCD)	R/W Head CH 1 designation: 1 R/W Head CH 2 designation: 2 The CD1D must be set to 1.
+(4(N–1)+4)	Leading address No. (4 digits Hexadecimal)	0000 to FFFF
+(4(N–1)+5)	Read bytes (2 digits Hexadecimal)	If number of Heads is 2 or less 01 to 76 (1 to 118 bytes)
		If number of Heads is 4 or less 01 to 30 (1 to 48 bytes)
		If number of Heads is 8 or less 01 to 20 (1 to 20 bytes)

N: Number of Heads

Receive Data Word Allocation (3rd Operand of PMCR)

None.

Note
1. Execute Sequence No. 510 before executing Sequence No. 511, 512, 513.
2. Execute Sequence No. 544 (Polling Auto-read Command Processing Cancel) to cancel the polling auto-read.
3. Retry processing is not performed for this sequence.

Polling Auto-read Sub-command (ASCII/2) (Sequence No. 511)

This sequence is used when the maximum number of Heads to be read from the Carrier is 2. Up to 118 bytes of data can be read for each Read/Write Head.

Send Data Word Allocation (2nd Operand of PMCR)

The send data word allocation is similar to that of Sequence No. 501 (Read (ASCII/2)). However, the leading address No. and number of read bytes are not used and will be the value specified for sequence #510.

Receive Data Word Allocation (3rd Operand of PMCR)

The receive data word allocation is similar to that of Sequence No. 501 (Read (ASCII/2)).

Note
1. Execute Sequence No. 510 before executing Sequence No. 511.
2. Data from Data Carriers designated for ASCII is stored beginning with the smallest offset from the receive data words.
3. Retry processing is not performed for this sequence.

Polling Auto-read Sub-command (ASCII/4) (Sequence No. 512)

This sequence is used when the maximum number of Heads to be read from the Carrier is 4. Up to 48 bytes of data can be read for each Read/Write Head.

Send Data Word Allocation (2nd Operand of PMCR)

The send data word allocation is similar to that of Sequence No. 502 (Read (ASCII/4)). However, the leading address No. and number of read bytes are not used and will be the value specified for sequence #510.

Receive Data Word Allocation (3rd Operand of PMCR)

The receive data word allocation is similar to that of Sequence No. 502 (Read (ASCII/4)).

Note
1. Execute Sequence No. 510 before executing Sequence No. 512.
2. Data from Data Carriers designated for ASCII is stored beginning with the smallest offset from the receive data words.
3. Retry processing is not performed for this sequence.

Polling Auto-read Sub-command (ASCII/8) (Sequence No. 513)

This sequence is used when the maximum number of Heads to be read from the Carrier is 8. Up to 20 bytes of data can be read for each Read/Write Head.

Send Data Word Allocation (2nd Operand of PMCR)

The send data word allocation is similar to that of Sequence No. 503 (Read (ASCII/8)). However, the leading address No. and number of read bytes are not used and will be the value specified for sequence #510.

Receive Data Word Allocation (3rd Operand of PMCR)

The receive data word allocation is similar to that of Sequence No. 503 (Read (ASCII/8)).

Note
1. Execute Sequence No. 510 before executing Sequence No. 513.
2. Data from Data Carriers designated for ASCII is stored beginning with the smallest offset from the receive data words.
3. Retry processing is not performed for this sequence.

Polling Auto-read (Hexadecimal) (Sequence No. 514)

This sequence is used when the number of Heads to be read from the Carrier is from 1 to 8.

Send Data Word Allocation (2nd Operand of PMCR)

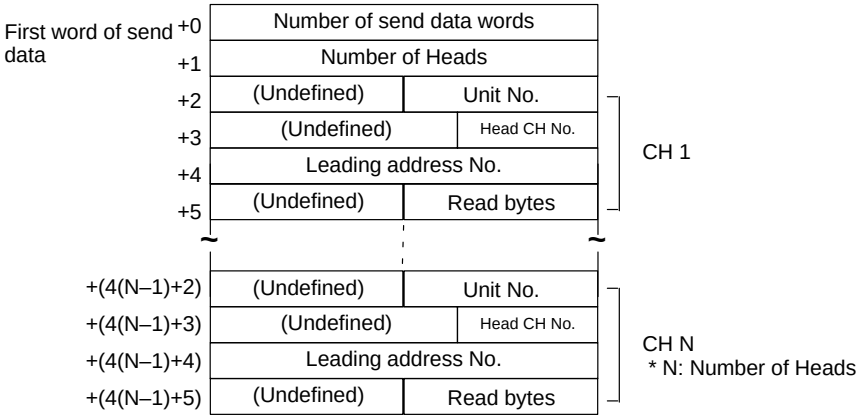

Offset	Contents (data format)	Data
+0	Number of send data words (4 digits BCD)	0006 to 0034
+1	Number of Heads (4 digits BCD)	0001 to 0008
+(4(N–1)+2)	Unit No. (2 digits BCD)	Arbitrary (However, there is a limit for the maximum Unit No. depending on the model)
+(4(N–1)+3)	R/W Head CH No. (1 digit BCD)	R/W Head CH 1 designation: 1 R/W Head CH 2 designation: 2
+(4(N–1)+4)	Leading address No. (4 digits Hexadecimal)	0000 to FFFF
+(4(N–1)+5)	Read bytes (2 digits Hexadecimal)	If number of Heads is 2 or less 01 to 3C (1 to 60 bytes)
		If number of Heads is 4 or less 01 to 18 (1 to 24 bytes)
		If number of Heads is 8 or less 01 to 0A (1 to 10 bytes)

N: Number of Heads

Receive Data Word Allocation (3rd Operand of PMCR)

None.

Note 1. Execute Sequence No. 514 before executing Sequence No. 515, 516, 517.

2. Execute Sequence No. 544 (Polling Auto-read Command Processing Cancel) to cancel the polling auto-read.

Polling Auto-read Sub-command (Hexadecimal/2) (Sequence No. 515)

This sequence is used when the maximum number of Heads to be read from the Carrier is 2. Up to 60 bytes of data can be read for each Read/Write Head.

Send Data Word Allocation (2nd Operand of PMCR)

The send data word allocation is similar to that of Sequence No. 505 (Read (Hexadecimal/2)). However, the leading address No. and number of read bytes are not used and will be the value specified for sequence #514.

Receive Data Word Allocation (3rd Operand of PMCR)

The receive data word allocation is similar to that of Sequence No. 505 (Read (Hexadecimal/2)).

Note 1. Execute Sequence No. 514 before executing Sequence No. 515.

2. Data from Data Carrier designated for hexadecimal is stored beginning with the largest offset from the receive data words.
3. Retry processing is not performed for this sequence.

Polling Auto-read Sub-command (Hexadecimal/4) (Sequence No. 516)

This sequence is used when the maximum number of Heads to be read from the Carrier is 4. Up to 24 bytes of data can be read for each Read/Write Head.

Send Data Word Allocation (2nd Operand of PMCR)

The send data word allocation is similar to that of Sequence No. 506 (Read (Hexadecimal/4)). However, the leading address No. and number of read bytes are not used and will be the value specified for sequence #514.

Receive Data Word Allocation (3rd Operand of PMCR)

The receive data word allocation is similar to that of Sequence No. 506 (Read (Hexadecimal/4)).

Note 1. Execute Sequence No. 514 before executing Sequence No. 516.
2. Data from Data Carrier designated for hexadecimal is stored beginning with the largest offset from the receive data words.

Polling Auto-read Sub-command (Hexadecimal/8) (Sequence No.517)

This sequence is used when the maximum number of Heads to be read from the Carrier is 8. Up to 10 bytes of data can be read for each Read/Write Head.

Send Data Word Allocation (2nd Operand of PMCR)

The send data word allocation is similar to that of sequence No.507 (Read (Hexadecimal/8)). However, the leading address No. and number of read bytes are not used and will be the value specified for sequence #514.

Receive Data Word Allocation (3rd Operand of PMCR)

The receive data word allocation is similar to that of sequence No.507 (Read (Hexadecimal/8)).

Note 1. Execute sequence No.514 before executing sequence No.517.
2. Data from Data Carriers designated for hexadecimal is stored beginning with the largest offset from the receive data words.
3. Retry processing is not performed for this sequence.

Write (ASCII/1) (Sequence No.518)

This sequence is used when the number of Heads to be written to the Carrier is 1.

Send Data Word Allocation (2nd Operand of PMCR)

First word of send data	+0	Number of send data words	
	+1	(Undefined)	Unit No.
	+2	(Undefined)	Head CH No.
	+3	Leading address No.	
	+4	Number of write bytes	
	+5	Write data	
	~	⋮	~
	Max		
	+128	Write data	

Offset	Contents (data format)	Data
+0	Number of send data words (4 digits BCD)	0006 to 0129
+1	Relevant Unit No. (2 digits BCD)	00 to 07 (CD1D) 00 to 15 (CA2A)
+2	R/W Head CH No. (1 digit BCD)	R/W Head CH 1 designation: 1 R/W Head CH 2 designation: 2 The CD1D must be set to 1.
+3	Leading address No. (4 digits Hexadecimal)	0000 to FFFF
+4	Number of write bytes (4 digits BCD)	0001 to 0248
+5to +128	Write data (ASCII)	Input in ASCII Up to 248 bytes (max.) can be set

Receive Data Word Allocation (3rd Operand of PMCR)

None.

Note Write data designated for ASCII is sent beginning with the smallest offset from the send data words.

Write (ASCII/2) (Sequence No. 519)

This sequence is used when the number of Heads to be written to the Carrier is 2. Up to 118 bytes of data can be read for each Read/Write Head.

Send Data Word Allocation (2nd Operand of PMCR)

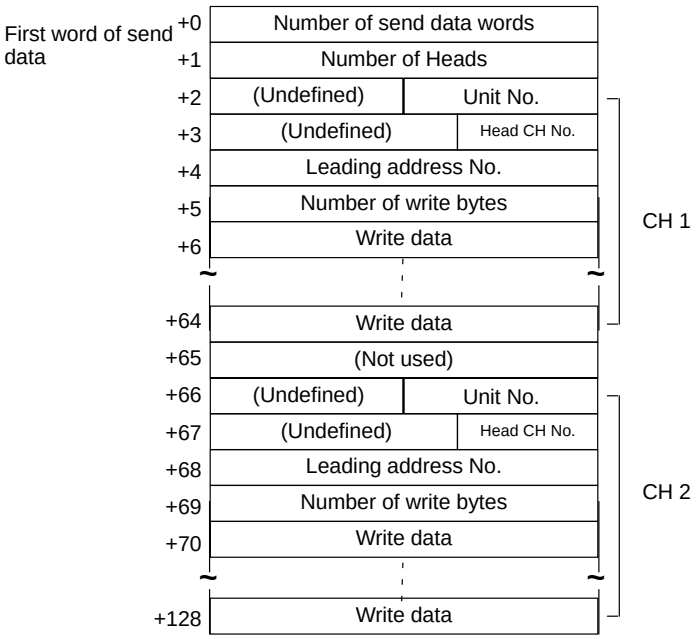

Offset	Contents (data format)	Data
+0	Number of send data words (4 digits BCD)	0007 to 0129
+1	Number of Heads (4 digits BCD)	0001 to 0002
+(64(N–1)+2)	Unit No. (2 digits BCD)	Arbitrary (However, there is a limit for the maximum Unit No. depending on the model)
+(64(N–1)+3)	R/W Head CH No. (1 digit BCD)	R/W Head CH 1 designation: 1 R/W Head CH 2 designation: 2 The CD1D must be set to 1.
+(64(N–1)+4)	Leading address No. (4 digits Hexadecimal)	0000 to FFFF
+(64(N–1)+5)	Number of write bytes (4 digits BCD)	0001 to 0118
+(64(N–1)+6) to (64(N–1)+64)	Write data (ASCII)	Input in ASCII. Up to 118 bytes (max.) can be set

N: Number of Heads

Receive Data Word Allocation (3rd Operand of PMCR)

None.

Note Write data designated for ASCII is sent beginning with the smallest offset from the send data words.

Write (ASCII/4) (Sequence No. 520)

This sequence is used when the number of Heads to be written to the Carrier is 4. Up to 48 bytes of data can be read for each Read/Write Head.

Send Data Word Allocation (2nd Operand of PMCR)

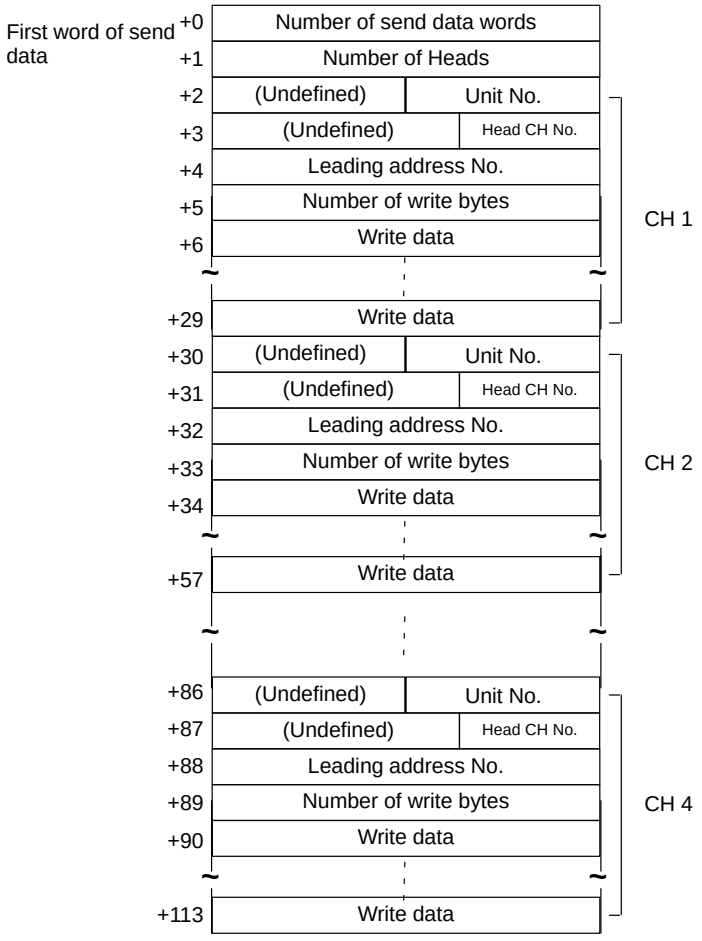

Offset	Contents (data format)	Data
+0	Number of send data words (4 digits BCD)	0007 to 0114
+1	Number of Heads (4 digits BCD)	0001 to 0004
+(28(N–1)+2)	Unit No. (2 digits BCD)	Arbitrary (However, there is a limit for the maximum Unit No. depending on the model)
+(28(N–1)+3)	R/W Head CH No. (1 digit BCD)	R/W Head CH 1 designation: 1 R/W Head CH 2 designation: 2 The CD1D must be set to 1.
+(28(N–1)+4)	Leading address No. (4 digits Hexadecimal)	0000 to FFFF
+(28(N–1)+5)	Number of write bytes (4 digits BCD)	0001 to 0048
+(28(N–1)+6) to (28(N–1)+29)	Write data (ASCII)	Input in ASCII. Up to 48 bytes (max.) can be set

N: Number of Heads

Receive Data Word Allocation (3rd Operand of PMCR)

None.

Note Write designated for ASCII is sent beginning with the smallest offset from the send data words.

Write (ASCII/8) (Sequence No. 521)

This sequence is used when the number of Heads to be written to the Carrier is 8. Up to 20 bytes of data can be read for each Read/Write Head.

Send Data Word Allocation (2nd Operand of PMCR)

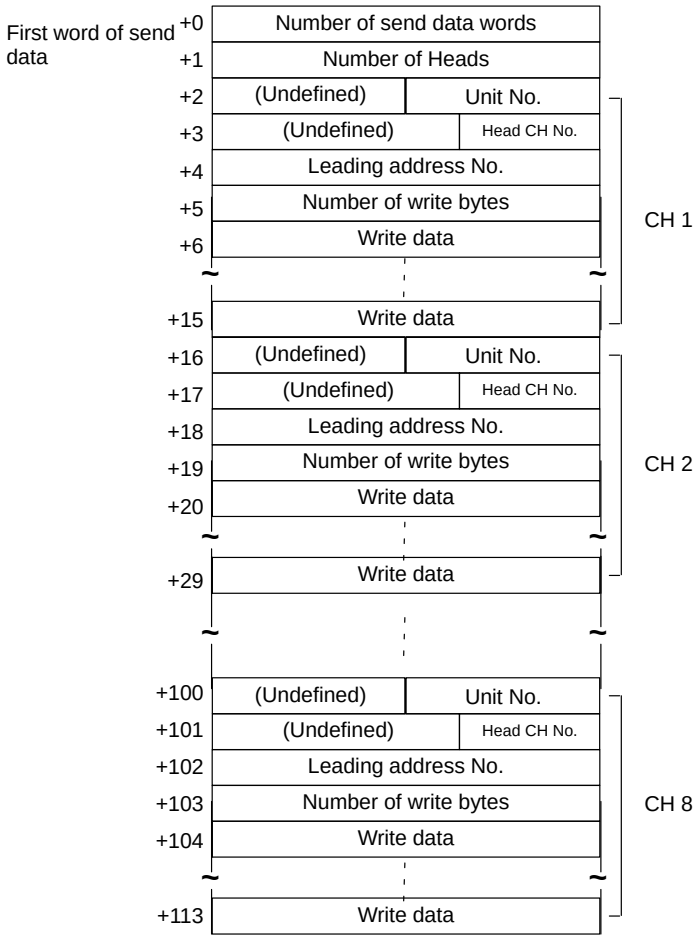

Offset	Contents (data format)	Data
+0	Number of send data words(4 digits BCD)	0007 to 0114
+1	Number of Heads (4 digits BCD)	0001 to 0008
+(14(N–1)+2)	Unit No. (2 digits BCD)	Arbitrary (However, there is a limit for the maximum Unit No. depending on the model)
+(14(N–1)+3)	R/W Head CH No. (1 digit BCD)	R/W Head CH 1 designation: 1 R/W Head CH 2 designation: 2 The CD1D must be set to 1.
+(14(N–1)+4)	Leading address No. (4 digits Hexadecimal)	0000 to FFFF
+(14(N–1)+5)	Number of write bytes (4 digits BCD)	0001 to 0020
+(14(N–1)+6) to (14(N–1)+15)	Write data (ASCII)	Input in ASCII Up to 20 bytes (max.) can be set

N: Number of Heads

Receive Data Word Allocation (3rd Operand of PMCR)

None.

Note Write data designated for ASCII is sent beginning with the smallest offset from the send data words.

Write (Hexadecimal/1) (Sequence No. 522)

This sequence is used when the number of Heads to be written to the Carrier is 1.

Send Data Word Allocation (2nd Operand of PMCR)

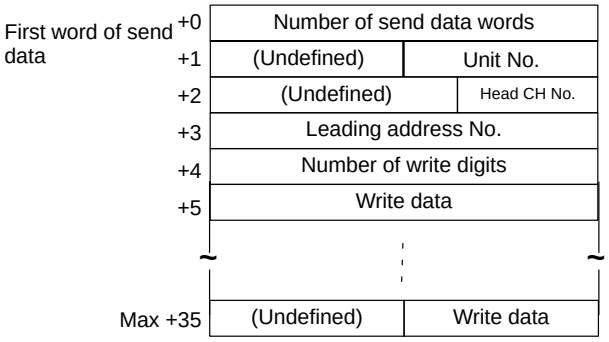

Offset	Contents (data format)	Data
+0	Number of send data words (4 digits BCD)	0006 to 0036
+1	Relevant Unit No. (2 digits BCD)	00 to 07 (CD1D) 00 to 15 (CA2A)
+2	R/W Head CH No. (1 digit BCD)	R/W Head CH 1 designation: 1 R/W Head CH 2 designation: 2 The CD1D must be set to 1.
+3	Leading address No. (4 digits Hexadecimal)	0000 to FFFF
+4	Number of write digits (4 digits BCD)	0002 to 0122
+5 to 35	Write data (Hexadecimal)	Input in hexadecimal Up to 122 digits (max.)

Receive Data Word Allocation (3rd Operand of PMCR)

None.

Note 1. Data of which Data Carrier designated for hexadecimal is sent beginning with the largest offset from the send data words.

2. Always set an even number of digits for the write data.

Write (Hexadecimal/2) (Sequence No. 523)

This sequence is used when the number of Heads to be written to the Carrier is 2. Up to 56 digits of data can be written for each Read/Write Head.

Send Data Word Allocation (2nd Operand of PMCR)

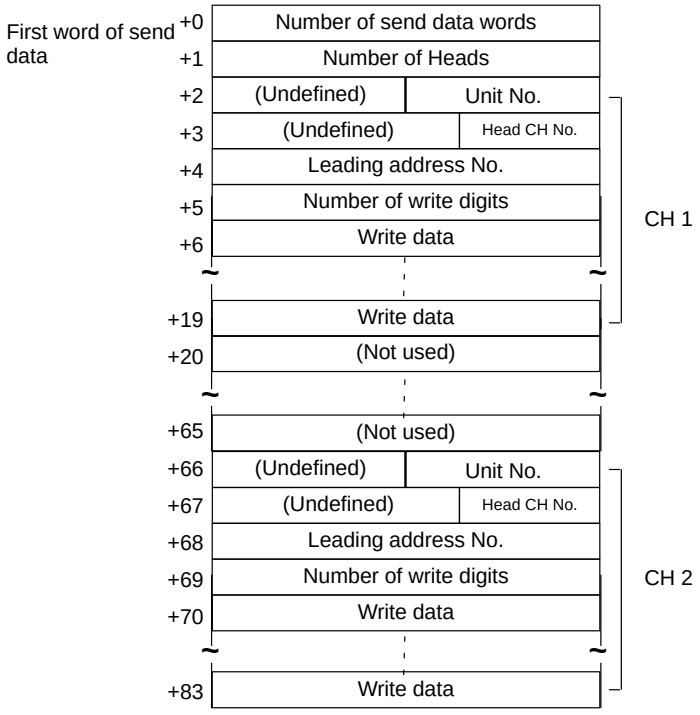

Offset	Contents (data format)	Data
+0	Number of send data words (4 digits BCD)	0007 to 0084
+1	Number of Heads (4 digits BCD)	0002 to 0002
+(64(N–1)+2)	Unit No. (2 digits BCD)	Arbitrary (However, there is a limit for the maximum Unit No. depending on the model)
+(64(N–1)+3)	R/W Head CH No. (1 digit BCD)	R/W Head CH 1 designation: 1 R/W Head CH 2 designation: 2 The CD1D must be set to 1.
+(64(N–1)+4)	Leading address No. (4 digits Hexadecimal)	0000 to FFFF
+(64(N–1)+5)	Number of write digits (4 digits BCD)	0002 to 0056
+(64(N–1)+6) to (64(N–1)+19)	Write data (Hexadecimal)	Input in hexadecimal Up to 56 digits (max.) can be set

N: Number of Heads

Receive Data Word Allocation (3rd Operand of PMCR)

None.

Note 1. Write data designated for hexadecimal is sent beginning with the largest offset from the send data words.

2. Always set an even number of digits for the write data.

Write (Hexadecimal/4) (Sequence No. 524)

This sequence is used when the number of Heads to be written to the Carrier is 4. Up to 24 digits of data can be written for each Read/Write Head.

Send Data Word Allocation (2nd Operand of PMCR)

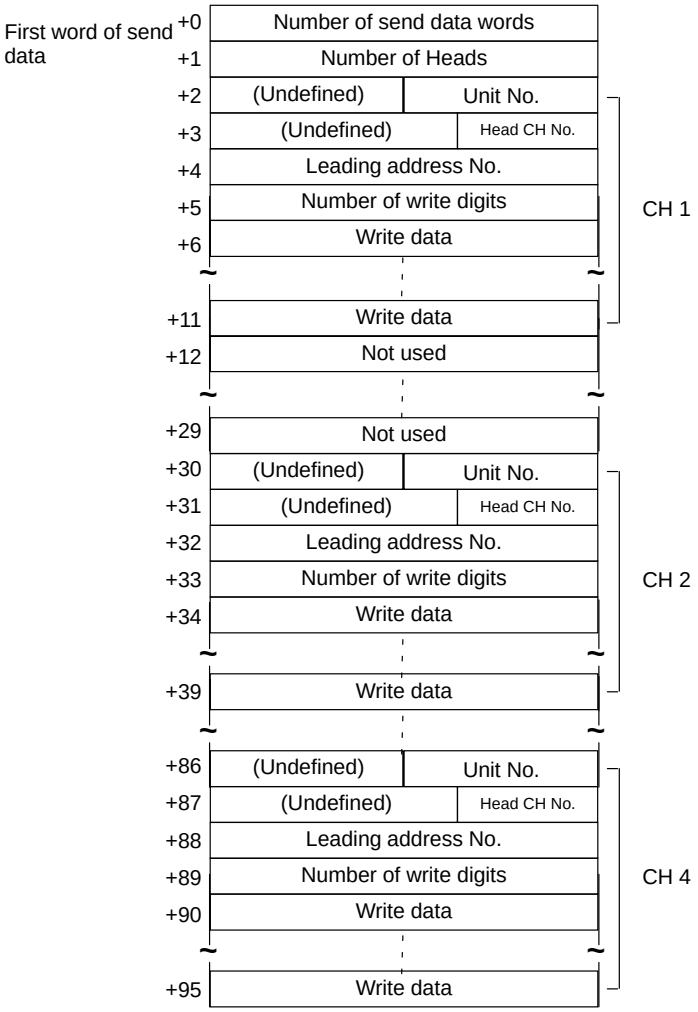

Offset	Contents (data format)	Data
+0	Number of send data words (4 digits BCD)	0007 to 0096
+1	Number of Heads (4 digits BCD)	0001 to 0004
+(28(N–1)+2)	Unit No. (2 digits BCD)	Arbitrary (However, there is a limit for the maximum Unit No. depending on the model)
+(28(N–1)+3)	R/W Head CH No. (1 digit BCD)	R/W Head CH 1 designation: 1 R/W Head CH 2 designation: 2 The CD1D must be set to 1.
+(28(N–1)+4)	Leading address No. (4 digits Hexadecimal)	0000 to FFFF
+(28(N–1)+5)	Number of write digits (4 digits BCD)	0002 to 0024
+(28(N–1)+6) to (28(N–1)+11)	Write data (Hexadecimal)	Input in hexadecimal code Up to 24 digits (max.) can be set

N: Number of Heads

Receive Data Word Allocation (3rd Operand of PMCR)

None.

Note 1. Write data designated for hexadecimal is sent beginning with the largest offset from the send data words.

2. Always set an even number of digits for the write data.

Write (Hexadecimal/8) (Sequence No. 525)

This sequence is used when the number of Heads to be written to the Carrier is 8. Up to 10 digits of data can be written for each Read/Write Head.

Send Data Word Allocation (2nd Operand of PMCR)

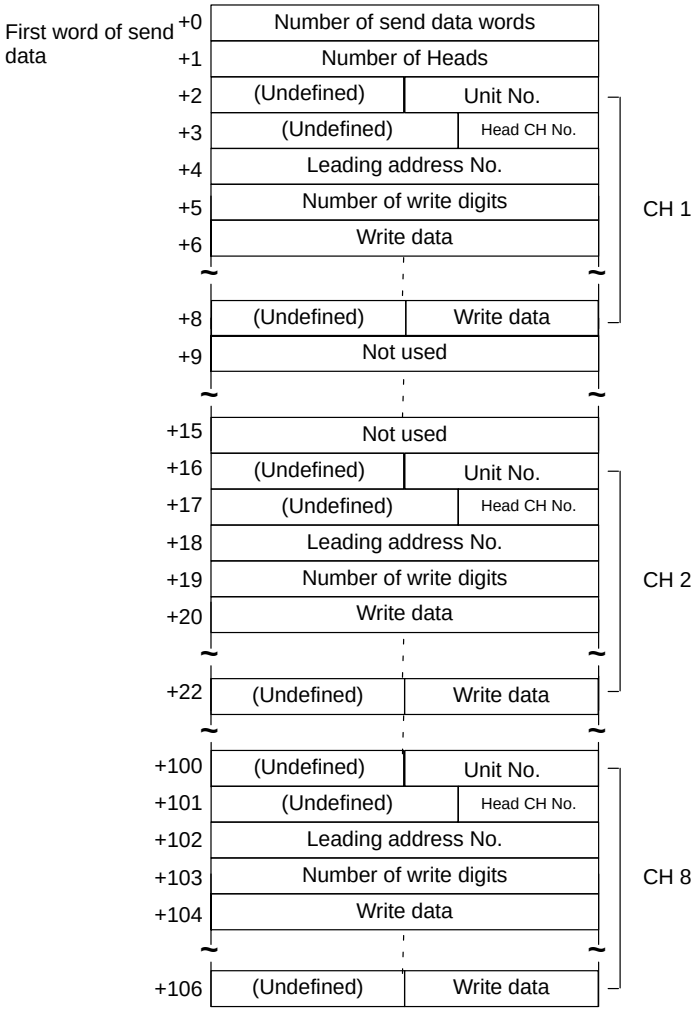

Offset	Contents (data format)	Data
+0	Number of send data words (4 digits BCD)	0007 to 0107
+1	Number of Heads (4 digits BCD)	0001 to 0004
+(14(N–1)+2)	Unit No. (2 digits BCD)	Arbitrary (However, there is a limit for the maximum Unit No. depending on the model)
+(14(N–1)+3)	R/W Head CH No. (1 digit BCD)	R/W Head CH 1 designation: 1 R/W Head CH 2 designation: 2 The CD1D must be set to 1.
+(14(N–1)+4)	Leading address No. (4 digits Hexadecimal)	0000 to FFFF
+(14(N–1)+5)	Number of write digits (4 digits BCD)	0002 to 0010
+(14(N–1)+6) to (14(N–1)+8)	Write data (Hexadecimal)	Input in hexadecimal code Up to 10 digits (max.) can be set

N: Number of Heads

Receive Data Word Allocation (3rd Operand of PMCR)

None.

Note 1. Write data designated for hexadecimal is sent beginning with the largest offset from the send data words.

2. Always set an even number of digits for the write data.

Auto-write (ASCII/1) (Sequence No. 526)

This sequence is used when the number of Heads to be written to the Carrier is 1.

Send Data Word Allocation (2nd Operand of PMCR)

The send data word allocation is similar to that of Sequence No. 518 (Write(ASCII/1)).

Receive Data Word Allocation (3rd Operand of PMCR)

The receive data word allocation is similar to that of Sequence No. 518 (Write(ASCII/1)).

Note For auto-write (AW), a response is not returned if the number of Heads is not written by the Carrier, the Abort Bit must be turned OFF to terminate the sequence.

Auto-write (Hexadecimal/1) (Sequence No. 527)

This sequence is used when the number of Heads to be written to the Carrier is 1.

Send Data Word Allocation (2nd Operand of PMCR)

The send data word allocation is similar to that of Sequence No. 522 (Write (Hexadecimal/1)).

Receive Data Word Allocation (3rd Operand of PMCR)

The receive data word allocation is similar to that of Sequence No. 522 (Write (Hexadecimal/1)).

Note For auto-write (AW), a response is not returned if the number of Heads is not written by the Carrier, the Abort Bit must be turned OFF to terminate the sequence.

Polling Auto-write (ASCII/2) (Sequence No. 528)

This sequence is used when the number of Heads to be written to the Carrier is 2.

Send Data Word Allocation (2nd Operand of PMCR)

The send data word allocation is similar to that of Sequence No. 519 (Write (ASCII/2)).

Receive Data Word Allocation (3rd Operand of PMCR)

The receive data word allocation is similar to that of Sequence No. 519 (Write (ASCII/2)).

Note 1. Execute Sequence No. 545 (Polling Auto-write Command Processing Cancel) to cancel the polling auto-write.

2. Retry processing is not performed for this sequence.

Polling Auto-write Subcommand (ASCII/2) (Sequence No. 529)

This sequence is used when the number of Heads to be written to the Carrier is 2. Up to 118 digits of data can be written for each Read/Write Head.

Send Data Word Allocation (2nd Operand of PMCR)

The send data word allocation is similar to that of Sequence No. 519 (Write (ASCII/2)). However, the leading address No., number of write, and write data are not used and become undefined.

Receive Data Word Allocation (3rd Operand of PMCR)

None.

Note 1. Execute Sequence No. 528 before executing Sequence No. 529.
2. Retry processing is not performed for this sequence.

Polling Auto-write (ASCII/4) (Sequence No. 530)

This sequence is used when the number of Heads to be written to the Carrier is 4.

Send Data Word Allocation (2nd Operand of PMCR)

The send data word allocation is similar to that of Sequence No. 520 (Write (ASCII/4)).

Receive Data Word Allocation (3rd Operand of PMCR)

The receive data word allocation is similar to that of Sequence No. 520 (Write(ASCII/4)).

Note Execute Sequence No. 545 (Polling Auto-write Command Processing Cancel) to cancel the polling auto-write.

Polling Auto-write Subcommand (ASCII/4) (Sequence No. 531)

This sequence is used when the number of Heads to be written to the Carrier is 4. Up to 48 digits of data can be written for each Read/Write Head.

Send Data Word Allocation (2nd Operand of PMCR)

The send data word allocation is similar to that of Sequence No. 520 (Write (ASCII/4)). However, the leading address No., number of write, and write data are not used and become undefined.

Receive Data Word Allocation (3rd Operand of PMCR)

None.

Note 1. Execute Sequence No. 530 before executing Sequence No. 531.
2. Retry processing is not performed for this sequence.

Polling Auto-write (ASCII/8) (Sequence No. 532)

This sequence is used when the number of Heads to be written to the Carrier is 8.

Send Data Word Allocation (2nd Operand of PMCR)

The send data word allocation is similar to that of Sequence No. 521 (Write (ASCII/8)).

Receive Data Word Allocation (3rd Operand of PMCR)

The receive data word allocation is similar to that of Sequence No. 521 (Write (ASCII/8)).

Note 1. Execute Sequence No. 545 (Polling Auto-write Command Processing Cancel) to cancel the polling auto-write.
2. Retry processing is not performed for this sequence.

Polling Auto-write Subcommand (ASCII/8) (Sequence No. 533)

This sequence is used when the number of Heads to be written to the Carrier is 8. Up to 20 digits of data can be written for each Read/Write Head.

Send Data Word Allocation (2nd Operand of PMCR)

The send data word allocation is similar to that of Sequence No. 521 (Write (ASCII/8)). However, the leading address No., number of write, and write data are not used and become undefined.

Receive Data Word Allocation (3rd Operand of PMCR)
None.

Note 1. Execute Sequence No. 532 before executing Sequence No. 533.
2. Retry processing is not performed for this sequence.

Polling Auto-write (Hexadecimal/2) (Sequence No. 534)

This sequence is used when the number of Heads to be written to the Carrier is 2.

Send Data Word Allocation (2nd Operand of PMCR)
The send data word allocation is similar to that of Sequence No. 523 (Write (Hexadecimal/2)).

Receive Data Word Allocation (3rd Operand of PMCR)
The receive data word allocation is similar to that of Sequence No. 523 (Write (Hexadecimal/2)).

Note 1. Execute Sequence No. 545 (Polling Auto-write Command Processing Cancel) to cancel the polling auto-write.
2. Retry processing is not performed for this sequence.

Polling Auto-write Subcommand (Hexadecimal/2) (Sequence No. 535)

This sequence is used when the number of Heads to be written to the Carrier is 2. Up to 56 digits of data can be written for each Read/Write Head.

Send Data Word Allocation (2nd Operand of PMCR)
The send data word allocation is similar to that of Sequence No. 523 (Write (Hexadecimal/2)). However, the leading address No., number of write, and write data are not used and become undefined.

Receive Data Word Allocation (3rd Operand of PMCR)
None.

Note 1. Execute Sequence No. 534 before executing Sequence No. 535.
2. Retry processing is not performed for this sequence.

Polling Auto-write (Hexadecimal/4) (Sequence No. 536)

This sequence is used when the number of Heads to be written to the Carrier is 4.

Send Data Word Allocation (2nd Operand of PMCR)
The send data word allocation is similar to that of Sequence No. 524 (Write (Hexadecimal/4)).

Receive Data Word Allocation (3rd Operand of PMCR)
The receive data word allocation is similar to that of Sequence No. 524 (Write (Hexadecimal/4)).

Note 1. Execute Sequence No. 545 (Polling Auto-write Command Processing Cancel) to cancel the polling auto-write.
2. Retry processing is not performed for this sequence.

Polling Auto-write Subcommand (Hexadecimal/4) (Sequence No. 537)

This sequence is used when the number of Heads to be written to the Carrier is 2. Up to 24 digits of data can be written for each Read/Write Head.

Send Data Word Allocation (2nd Operand of PMCR)
The send data word allocation is similar to that of Sequence No. 524 (Write (Hexadecimal/4)). However, the leading address No., number of write, and write data are not used and become undefined.

Receive Data Word Allocation (3rd Operand of PMCR)
None.

Note 1. Execute Sequence No. 536 before executing Sequence No. 537.
2. Retry processing is not performed for this sequence.

Polling Auto-write (Hexadecimal/8) (Sequence No. 538)

This sequence is used when the number of Heads to be written to the Carrier is 8.

Send Data Word Allocation (2nd Operand of PMCR)

The send data word allocation is similar to that of Sequence No. 525 (Write (Hexadecimal/8)).

Receive Data Word Allocation (3rd Operand of PMCR)

The receive data word allocation is similar to that of Sequence No. 525 (Write (Hexadecimal/8)).

Note 1. Execute Sequence No. 545 (Polling Auto-write Command Processing Cancel) to cancel the polling auto-write.
2. Retry processing is not performed for this sequence.

Polling Auto-write Subcommand (Hexadecimal/8) (Sequence No. 539)

This sequence is used when the number of Heads to be written to the Carrier is 8. Up to 10 digits of data can be written for each Read/Write Head.

Send Data Word Allocation (2nd Operand of PMCR)

The send data word allocation is similar to that of Sequence No. 525 (Write (Hexadecimal/8)). However, the leading address No., number of write, and write data are not used and become undefined.

Receive Data Word Allocation (3rd Operand of PMCR)

None.

Note 1. Execute Sequence No. 538 before executing Sequence No. 539.
2. Retry processing is not performed for this sequence.

Data Check (Sequence No. 540)

This sequence writes and verifies the CRC code for check blocks designated by the user.

Send Data Word Allocation (2nd Operand of PMCR)

First word of send data	+0	Number of send data words	
	+1	(Undefined)	Unit No.
	+2	(Undefined)	Head CH No.
	+3	Processing designation	(Undefined)
	+4	Leading address of check object	
	+5	(Undefined)	Number of check block bytes

Offset	Contents (data format)	Data
+0	Number of send data words (4 digits BCD)	0006 (fixed)
+1	Unit No. (2 digits BCD)	00 to 07 (CD1D) 00 to 15 (CA2A)
+2	R/W Head CH No. (1 digit BCD)	R/W Head CH 1 designation: 1 R/W Head CH 2 designation: 2 The CD1D must be set to 1.
+3	Processing designation (2 digits Hexadecimal)	Verification: 43 (C) Calculation: 4B (K) Management of number of write times: 4C (L)
+4	Leading address of check object (4 digits Hexadecimal)	0000 to FFFF (If management of number of write times is designated, H' □□□0 to H' □□□5 or H' □□□8 to H' □□□D)
+5	Number of check block bytes (2 digits Hexadecimal)	If verification, calculation is designated: 03 to FF (set 00 for 256 bytes) If management of number of write times is designated: 00 to FF

Receive Data Word Allocation (3rd Operand of PMCR)

Receive data storage words	+0	Number of receive data words	
	+1	(Undefined)	Completion code

Offset	Contents (data format)	Data
+0	Number of receive data words (4 digits BCD)	0002 (fixed)
+1	Completion code (2 digits Hexadecimal)	(Verification, calculation designation) 00: Normal completion for calculation processing 75: Data in normal condition for verification processing 76: Error Data alarm for verification processing (If management of number of write times is designated) 75:Number of write times is under those which is specified. 76:alarm for number of write times is over those which is specified.

Note If L (management of number of write times) is designated by processing designation, management of number of write times for Data Carrier of EEPROM is performed.

Control (Sequence No. 541)

This sequence performs I/O operations or I/O reads.

Send Data Word Allocation (2nd Operand of PMCR)

First word of send data	+0	Number of send data words		
	+1	(Undefined)	Unit No.	
	+2	(Undefined)	OUT1 operation	OUT2 operation

Offset	Contents (data format)	Data
+0	Number of send data words (4 digits BCD)	0003 (fixed)
+1	Unit No. (2 digits BCD)	00 to 07 (CD1D)
+2	OUT1 operation (1 digit BCD)	0: No operation 1: turned ON 2: turned OFF
	OUT2 operation (1 digit BCD)	0: No operation 1: turned ON 2: turned OFF

Receive Data Word Allocation (3rd Operand of PMCR)

Receive data storage words	+0	Number of receive data words	
	+1	Current input status	Output status after operation

Offset	Contents (data format)	Data
+0	Number of receive data words (4 digits BCD)	0002 (fixed)
+1 Leftmost 1 byte	Current input status Leftmost 4 bits: IN1 operation Rightmost 4 bits: IN2 operation	1: ON status 0: OFF status
	Output status after operation Leftmost 4 bits: OUT1 operation Rightmost 4 bits: OUT2 operation	1: ON status 0: OFF status

Note 1. The V600/620-CA□A does not support this command.
2. This sequence executes the equivalent of the CONTROL command.

Error Information Read (Sequence No. 542)

This sequence reads information from the latest error log.

Send Data Word Allocation (2nd Operand of PMCR)

First word of send data	+0	Number of send data words	
	+1	(Undefined)	Unit No.

Offset	Contents (data format)	Data
+0	Number of send data words (4 digits BCD)	0002 (fixed)
+1	Unit No. (2 digits BCD)	00 to 07 (CD1D)

Receive Data Word Allocation (3rd Operand of PMCR)

Receive data storage words	+0	Number of receive data words
	+1	Error log
	~	~
	+75	Error log

Offset	Contents (data format)	Data
+0	Number of receive data words (4 digits BCD)	0004 to 0076
+1 to +75	Error log (ASCII)	One item of data is stored with 5 characters of generated command, generated Head No., generated error code.

Note 1. The V600/620-CA□A does not support this command.
2. Up to 30 error records can be stored.
3. The most resent error records are stored first.

Command Processing Cancel (Sequence No. 543)

This sequence cancels command processing except for polling command processing. The command waiting status is entered.

Send Data Word Allocation (2nd Operand of PMCR)

First word of send data	+0	Number of send data words	
	+1	(Undefined)	Unit No.

Offset	Contents (data format)	Data
+0	Number of send data words (4 digits BCD)	0002 (fixed)
+1	Unit No. (2 digits BCD)	Arbitrary (However, there is a limit for the maximum Unit No. depending on the model)

Receive Data Word Allocation (3rd Operand of PMCR)

Receive data storage words	+0	Number of receive data words	
	+1	(Undefined)	Unit No.

Offset	Contents (data format)	Data
+0	Number of receive data words (4 digits BCD)	0002 (fixed)
+1	Completion code (2 digits Hexadecimal)	00: Normal termination 14: Auto or communications command processing not executed 75: Cancelled before the end of expansion command receive or before sync input went active or before detection of the existence of Data Carrier 76: Cancelled during read/write processing for Data Carrier

Polling Auto-read Command Processing Cancel (Sequence No. 544)

This sequence cancels polling auto-read processing.

Send Data Word Allocation (2nd Operand of PMCR)

First word of send data	+0	Number of send data words	
	+1	(Undefined)	Unit No.
	+2	(Not used)	
	+3	(Undefined)	Head channel No.

Offset	Contents (data format)	Data
+0	Number of send data words (4 digits BCD)	0004 (fixed)
+1	Unit No. (2 digits BCD)	Arbitrary (However, there is a limit for the maximum Unit No. depending on the model)
+2	Not used	
+3	R/W Head CH No. (1 digit BCD)	R/W Head CH 1 designation: 1 R/W Head CH 2 designation: 2 The CD1D must be set to 1.

Receive Data Word Allocation (3rd Operand of PMCR)

Receive data storage words	+0	Number of receive data words	
	+1	(Undefined)	Completion code

Offset	Contents (data format)	Data
+0	Number of receive data words (4 digits BCD)	0002 (fixed)
+1	Completion code (2 digits Hexadecimal)	75: Cancelled before communications processing with Data Carrier 76: Cancelled after communications processing with Data Carrier

Polling Auto-write Command Processing Cancel (Sequence No. 545)

This sequence cancels polling auto-write processing

Send Data Word Allocation (2nd Operand of PMCR)

The send data word allocation is similar to that of Sequence No. 544 (Polling Auto-read Command Processing Cancel)

Receive Data Word Allocation (3rd Operand of PMCR)

The receive data word allocation is similar to that of Sequence No. 544 (Polling Auto-read Command Processing Cancel)

General-purpose Command (Sequence No. 546)

This sequence transmits arbitrary data and stores receive data to the receive data words. The characters “@”, FCS (terminator) are not required in the send data words and receive data words. These characters will be automatically added for transmission and automatically removed before saving data.

Send Data Word Allocation (2nd Operand of PMCR)

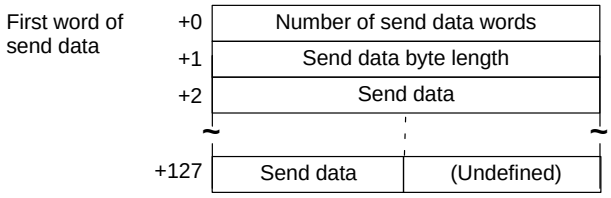

Offset	Contents (data format)	Data
+0	Number of send data words (4 digits BCD)	0003 to 0128
+1	Send data byte length (4 digits BCD)	0001 to 0251 The number of bytes in the send data except for @, the FCS, and the terminator.
+2 to +127	Send data (ASCII)	Input send data up to 251 characters (max.) in ASCII

Receive Data Storage Word Allocation (3rd Operand of PMCR)

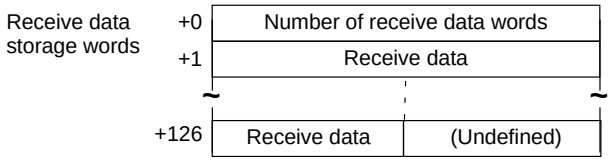

Offset	Contents (data format)	Data
+0	Number of receive data words (4 digits BCD)	0002 to 0127
+1 to +126	Receive data (ASCII)	Receive data is stored in ASCII. Up to 251 characters (max.)

Appendix L
Hayes Modem AT Command Protocol

The Hayes Modem AT Command Protocol is used to make various settings or control remotely a Hayes modem connected to the Communications Board via RS-232C cable.

Protocol Configuration

The configuration of the Hayes Modem AT Command Protocol is shown below.

Sequence No.	Communications sequence name	Function	Ladder interface	
			Send word allocation	Receive word allocation
550	Initialize modem (general-purpose)	Initializes the modem connected to the Communications Board. The initialization command is set in the words specified for the second operand of PMCR.	Yes	No
560 570 580	Initialize modem (specialized)	Initializes certain OMRON Modems.	No	No
561 571 581	Dial	Dials from the modem connected to the Communications Board. AT commands and telephone numbers are set set in the words specified for the second operand of PMCR. This sequence can be used only for certain OMRON modems.	Yes	No
552	Password	After the line is connected, the password sent from the other exchange is verified to confirm that the line is connected to the desired exchange. The normal value of a password is set in the words specified for the second operand of PMCR.	Yes	No
553	Data send/receive (general purpose sequence)	Sends arbitrary data to the exchange which the line is connected. Send data is set in the words specified for the second operand of PMCR. Receive data is stored in the words specified for the third operand of PMCR.	Yes	Yes
554	Escape	Shifts the modem to escape mode (the condition in which command input is available during data communications). The escape code is fixed to “+++”	No	No
555	Hang up	After shifting to escape mode, the line is disconnected.	No	No
562 572 582	Initialize and dial	Executes continuously from initialization to dialling operations for certain OMRON Modems.	Yes*	No
590	Escape to hang up	Executes continuously from shifting to the escape mode to hanging up.	No	No

Note 1. **Ladder Interface Settings**

YES: User settings are required for the 2nd and 3rd operands of PMCR.

NO: Send word allocation: Set a dummy word address for the 3rd operand (D).

Receive word allocation: Set the constant 0000 for the 2rd operand (S).

2. For details about dialling, refer to sequences 561, 571 and 581.

Connections

The connections when using the Hayes Modem AT Command Protocol is shown below.

RS-232C Connection

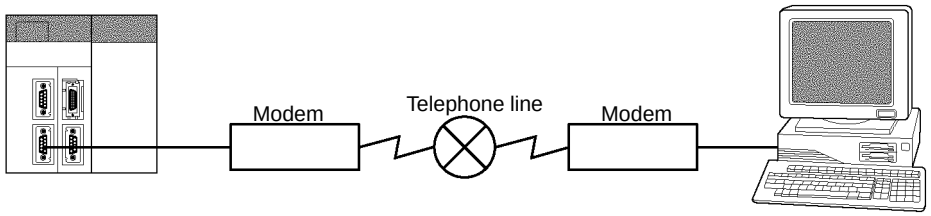

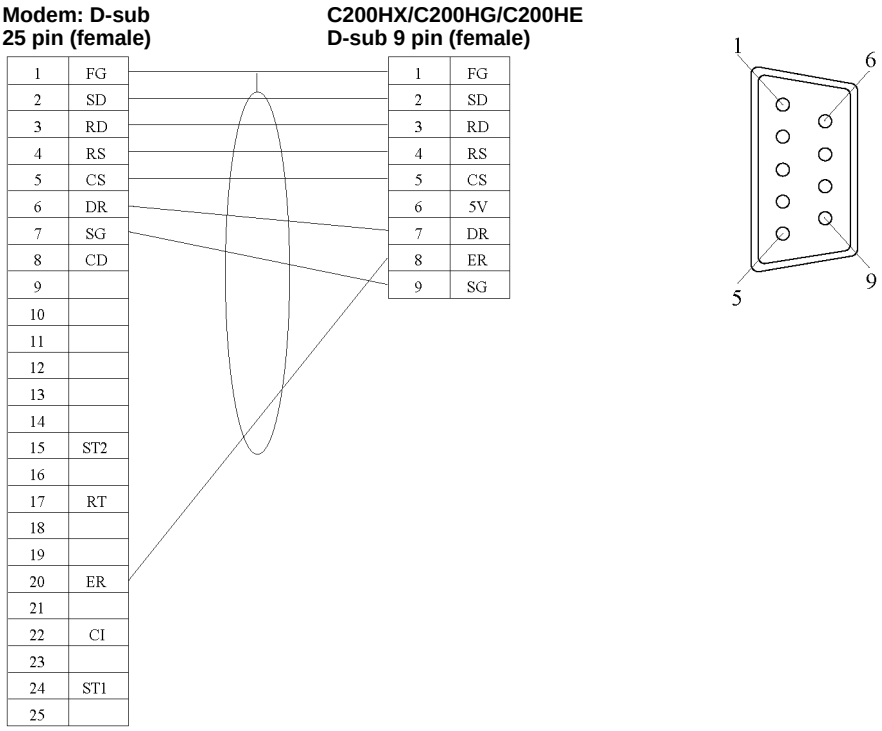

Compatible Modems

Although most of the sequences in this protocol can be used regardless of modem, the sequences Initialize Modem (specialized) and Dial sequences can be used only for the following Modems:

- MD24FB10V (OMRON Modem)
- MD144FB5V (OMRON Intelligent Modem)
- ME1414VB2/B2 (OMRON FAX/DATA Modem)

For other modems, create a modem initialization sequence using the general-purpose Initialize Modem sequence and dial using the Data Send/Receive sequence (Sequence No. 553).

Modem Settings

When this protocol is used, it is required that the modem connected to the Communications Board be initialized to the following conditions:

Command echo	No
Result code display format	Numeric format
Speed display, busy/dialling tone detection at connection	Baud rate display enabled, busy and dialling tone detection enabled.
Error correction data compression display	Error correction/data compression display enabled
MNP setting	Error correction provided (auto-reliable mode)
MNP class setting	MNP class 4
V.42 compression, Error correction	Not enabled
Flow control between terminal modems	Not enabled
ER signal control	Always ON
Escape code	+

Note 1. It is recommended that, in addition to the above settings, the abort timer should be set so that communications are cut off if a communications error happened due to incidents such as cable disconnection between the Communications Board and modem. Set the abort timer to 10 minutes for the modem initialization (specialized) (Sequence No. 560, 570, 580). Refer to modem's manual for further information about abort timers.

2. The data format of the modem (baud rate, data length, parity, stop bit) is set by AT commands issued from a device connected to the modem. Its settings should conform to communications conditions of the device which issues AT commands. Therefore when communications are made between the modem and Communications Board, it is required that communications conditions should be set by issuing AT commands from the Communications Board.

3. Modem settings become invalid if the power supply is turned off and must be set again. However, a memory backup function can be used to protect settings so that even after the power supply to the modem is turned off, it can communicate with the previous setting conditions.

For Initialize Modem (specialized), the modem initialization command is built in as message data. However, for Initialize Modem (general-purpose), the command must be specified in PMCR.

Operand 1	#x550 (x: Communications port)
Operand 2	First address for storing initialization command character string C
Operand 3	None

C+0	Number of words from address set for operand 2 to end of data	4 digits BCD
C+1	Number of bytes for send data (initialization command)	4 digits BCD
C+2 : C+n	Send data (initialization command) (Fill data to left for odd numbers of bytes)	ASCII

Setting Example for Modem Initialization Command

• MD24FB10V Using Sequence #550 (OMRON)

The following command is set in the words specified by the second operand of PMCR.

ATE0V0X4\V2\N3%C0*C0\X1&M0S26=10

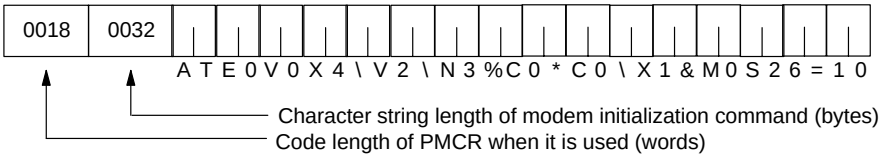

Note Turn ON pin 4 of DIP switches SW3 on for this Modem (ER signal always ON).

MD144FB5V (OMRON)

The following command is set in the words specified by the second operand of PMCR.

ATE0V0X4\V2\N3%C0*C0\Q0&M0&D0%B9600S26=10

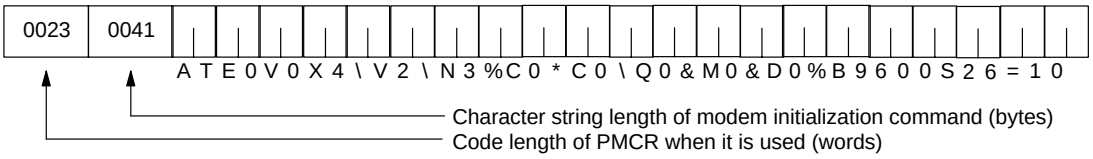

ME1414VBII/ME1414BII (OMRON)

The following command is set in the words specified by the second operand of PMCR.

AT\J1B8E0V0S0=1X4\V2\N3&M0%C0&D0&E0\X1S26=10

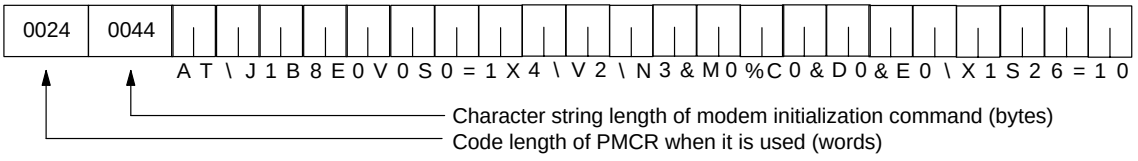

Note Turn ON DIP switch SW3 on in the rear of the Modem.

Dialling

To dial telephone numbers for the OMRON Modems using sequences No. 561, 571, 581, set the dialling command and telephone number in the words specified by the second operand of PMCR. However, for other Modems, make the following settings for the Data Send/Receive sequence.

This is an example of telephone number settings for the above mentioned 3 OMRON Modems.

Operand and Word Settings of PMCR

Operand 1	MD24FB10V	#x561 (x: Communications port)
	MD144FB5V	#x571
	ME1414VB2/B2	#x581
Operand 2	First address C of send data (dialling operation)	
Operand 3	None	

C+0	Number of words from address set for operand 2 to end of data	4 digits BCD
C+1	Number of bytes of send data (dialling operation)	4 digits BCD
C+2 : C+n	Send data (dialling operation) (Fill data to left for odd numbers of bytes)	ASCII

Setting Example

If telephone number is 03-0123-4567

0010	0016	4154	4454	3033	2D30	3132	332D	3435	3637
		A T	D T	0 3	– 0	1 2	3 –	4 5	6 7

Character string length of dialling operation sent to modem (bytes)
Code length of PMCR when it is used (words)

Note 1. This example uses a tone line. Change ATDT to ATDP for pulse lines.

2. Fill the telephone number to the left in the words if the character string length of the dialling operation is an odd number of bytes.

0008	0011	4154	4454	3031	2D32	3334	3500
		A T	D T	0 1	– 2	3 4	5 □

Character string length of dialling operation sent to modem (bytes)
Code length of PMCR when it is used (words)

Password Verification

A password can be verified by executing sequence No. 552 of this protocol. It is required to set in advance the value of the password in the words specified by the second operand of PMCR.

Operand and Word Settings of PMCR

Operand 1	#x550 (x: Communications port)
Operand 2	First address of the words where the password is set
Operand 3	None

C+0	Number of words from address set for operand 2 to end of data	4 digits BCD
C+1	Number of bytes of comparison data (normal value of password)	4 digits BCD
C+2 : C+n	Comparison value (password normal value) (Fill data to left for odd numbers of bytes)	ASCII

Setting Example

When password is OMRON-CO.

0006	0008	4F4D	524F	4E2D	434F
		O M	R O	N –	C O

Character string length of password sent to modem (bytes)
Code length of PMCR when it is used (words)

Password Verification Operation

The number of retries is 3 for password verification.

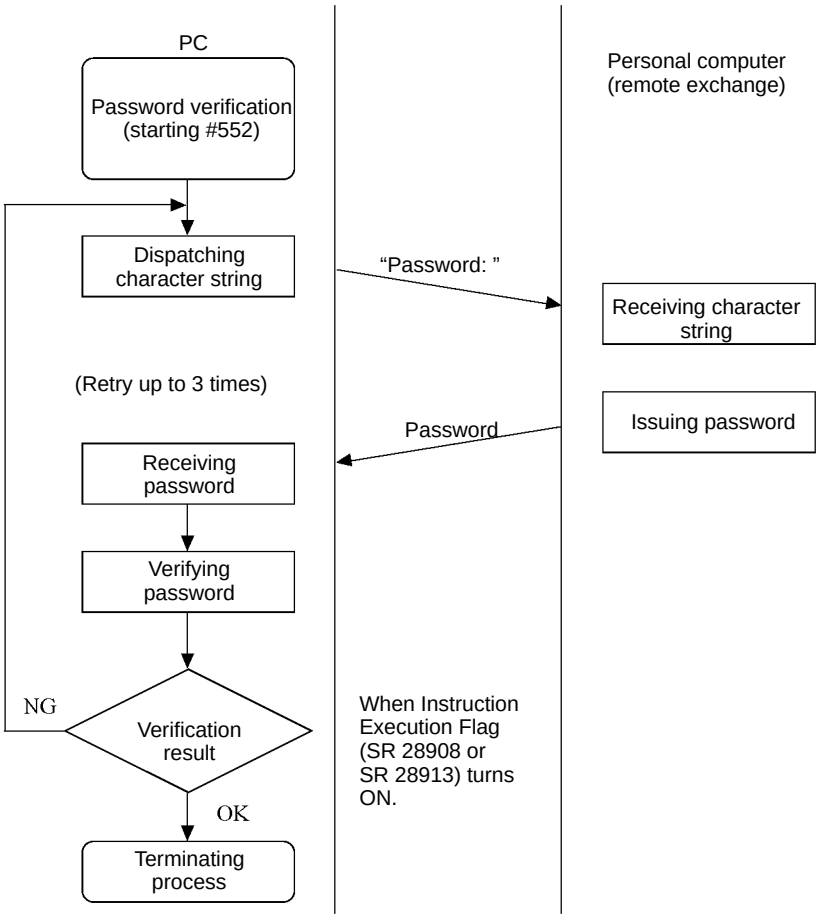

Data Send/Receive

Data Send/Receive can be executed using sequence No. 553. The send data sent to another exchange is set in the words specified by the second operand of PMCR. Data received by the PC is stored in the words specified by the third operand of PMCR.

Operand and Word Settings of PMCR

Operand 1	#x553 (x: Communications port)
Operand 2	First address C1 of the words where send data is set
Operand 3	First address C2 of the words where receive data is stored

• Operand 2

C1+0	Number of words from address set for operand 2 to end of data	4 digits BCD
C1+1	Number of bytes of send data	4 digits BCD
C1+2 : C1+n	Send data (dialling operation) (Fill data to left for odd numbers of bytes)	ASCII

• Operand 3

C2+0	Number of bytes of receive data	4 digits BCD
C2+1 : C2+n	Receive data (dialling operation) (Fill data to left for odd numbers of bytes)	ASCII

Setting Example

When send data is THIS IS SAMPLE.

0009	0014	5448	4953	2049	5320	5341	4D50	4C45
		T H	I S	I	S	S A	M P	L E

Character string length of send data sent to modem (bytes)
Code length of PMCR when it is used (words)

A maximum of 200 bytes (including the CR) can be received. When the received data is RETURN OK, the content stored in the receive words is as follows:

0006	5245	5455	524E	204F	4B00
	R E	T U	R N	O	K

Length of received character string (words)

Note An error will occur is the reception data is not received within 90 seconds after the data is sent.

Escape Mode

Shifting to the escape mode can be made using sequence No. 554. No setting is necessary for this sequence.

Note The character string to shift the online mode to the escape mode (i.e., the escape code) is '+' for modem settings.

Hang Up Command

The hang up command (to disconnect the line) can be executed using sequence No. 555. No setting is necessary for this sequence.

Communication Errors

Three result codes are monitored after an AT command is sent to the modem. When a result code is returned, it will be checked. If the code is not the normal result code ("OK", "CONNECT 9600/REL4", "CONNECT 2400/REL4", in words), after a fixed time of waiting to send, the following retry processing will be repeated 2 times to send the AT command again and waiting for another result code.

The receive monitoring time and send wait time for each sequence are shown below.

Sequence No.	Sequence name	Receive monitoring time	Send wait time for retries
#550	Initialize modem (general-purpose)	10 s	1 s
#560	Initialize modem (specialized)	10 s	1 s
#570			
#580			
#561	Dial	90 s	90 s
#571			
#581			
#552	Password	None	3 s
#553	Data send/receive (general-purpose)	90 s	None
#554	Escape	10 s	1.5 s (after first try)
#555	Hang up	10 s	1.5 s (after first try)
#562	Initialize and dial	90s	Initializing: 1 s Dialling: 90 s
#572			
#582			
#590	Escape and hang up	10 s	1.5 s (after first try)

Index

Numbers

3Z4L Laser Micrometer
  connections, 227
  protocols, sequences, 225–255

A–C

Abort Flags, 54

applications, precautions, xiii

cables
  RS-232C port, 12
  RS-422A/485 port, 13

CIO Area, 19

communications, 31
  sequences, 32
    settings, 33

connections, 14
  host link, 14
  link adapter, 15
  modem, 15
  protocol macros, 26
    RS-232C, 26
    RS-422A/485 connecting to RS-232C port, 27, 28, 30
    RS-422A/485 connecting to RS-422A/485 port, 27, 29
    RS-422A/485, 26

connectors
  RS-232C port, 12
    pin assignment, 12
  RS-422A/485 port, 13
    pin assignment, 13

CPU Units, 9

D–E

DM Area, PC Setup, 16

E5_J Temperature Controller
  connections, 136
  protocols, sequences, 135–148

E5_K Digital Controller
  connections
    read, 60
    write, 60
  read protocols, sequences, 59–76, 77–91

E5ZE Temperature Controller
  connections
    read, 94
    write, 94
  read protocols, sequences, 93–114
  write protocols, sequences, 115–134

echoback, disabling, 51

error codes, 55

error flags, 51

ES100 Digital Controller, connections, 150

ES100_ Digital Controller, protocols, sequences, 149–189

H–O

Half-duplex transmission, 49

Hayes Modem AT Command
  compatible modems, 312
  connections, 312
  protocols, sequences, 311–317

host link, connections, 14

indicators, 11

installation, 10
  precautions, xiii

link adapter, connections, 15

models, list, 6

modem
  compatibility, 312
  connections, 15
  settings, 313

operating environment, precautions, xiii

P

PC
  CIO Area, 19
  DM Area, 16
  PC Setup, 16
  words and bits, 19

PC Setup, 16
  protocol macros, 31

pin assignment
  RS-232C connector, 12
  RS-422A/485 connector, 13

PMCR instruction, 39
  execution, 43

precautions, xi
  applications, xiii
  general, xii
  operating environment, xiii
  safety, xii

Programmable Controller. *See* PC

protocol macros, 24
  connections required, 26
  PC Setup, 31

Protocol Support Software, 34
  functions, list, 35

protocols, 5, 38
3Z4L Laser Micrometer, sequences, 225–255
E5_J Temperature Controller, sequences, 135–148
E5_K Digital Controller read, sequences, 59–76, 77–91
E5ZE Temperature Controller read, sequences, 93–114
E5ZE Temperature Controller write, sequences, 115–134
ES100_ Digital Controller, sequences, 149–189
Hayes Modem AT Command, sequences, 311–317
Protocol Support Software, list, 38
V600/V620 ID Controller, sequences, 275–310
Visual Inspection System, sequences, 257–274

R–S

Restart Bits, 51

RS-422A/485, DIP switch settings, 8

safety precautions. *See* precautions

sequences, 32
settings, 33

sequences, 3Z4L Laser Micrometer
3Z4L Clear (Sequence No. 400), 231
3Z4L Initialize (3000-series) (Sequence No. 430), 247
3Z4L Initialize (4000-series) (Sequence No. 443), 253
All Statistic Memory Clear (3000-series) (Sequence No. 418), 241
Automatic Detection List Request (3000-series) (Sequence No. 429), 246
Automatic Detection Release (3000-series) (Sequence No. 428), 246
Automatic Detection Set (3000-series) (Sequence No. 427), 246
AVG Move (H) Times Set (3000-series) (Sequence No. 425), 245
AVG Move (L) Times Set (3000-series) (Sequence No. 426), 245
AVG Move Interval Set (3000-series) (Sequence No. 424), 245
Calibration Release (Sequence No. 405), 232
Calibration Set (Sequence No. 404), 232
Continuous Measurement Start (Interrupt) (3000-series) (Sequence No. 413), 240
Continuous Measurement Start (Interrupt) (4000-series) (Sequence No. 437), 252
Continuous Measurement Start (Scan) (3000-series) (Sequence No. 412), 239
Continuous Measurement Start (Scan) (4000-series) (Sequence No. 436), 252
Continuous Measurement Termination (4000-series) (Sequence No. 438), 253
Data Request (3000-series) (Sequence No. 415), 240
Data Request (4000-series) (Sequence No. 439), 253
Deflection Measurement Start (4000-series) (Sequence No. 435), 252
E Unit Set (Sequence No. 403), 231
Forced Negative Zero (4000-series) (Sequence No. 441), 253
Forced Positive Zero (4000-series) (Sequence No. 440), 253
Forced Zero Release (4000-series) (Sequence No. 442), 253
General-purpose Command 1 (4000-series) (Sequence No. 444), 254
General-purpose Command 2 (4000-series) (Sequence No. 445), 255
Measurement Condition List Request (3000-series) (Sequence No. 409), 236
Measurement Condition List Request (4000-series) (Sequence No. 433), 250
Measurement Condition Release (3000-series) (Sequence No. 408), 236
Measurement Condition Release (4000-series) (Sequence No. 432), 250
Measurement Condition Set (3000-series) (Sequence No. 407), 233
Measurement Condition Set (4000-series) (Sequence No. 431), 248
Measurement Termination (3000-series) (Sequence No. 414), 240
Memory Switch Set (Sequence No. 401), 231
Memory Switch Set 1 (3000-series) (Sequence No. 421), 243
Memory Switch Set 2 (3000-series) (Sequence No. 422), 244
mm Unit Set (Sequence No. 402), 231
Program Number Set (3000-series) (Sequence No. 406), 233
Settings, 228
Simple AVG Times Set (3000-series) (Sequence No. 423), 244
Single Run Measurement Start (3000-series) (Sequence No. 410), 239
Single Run Measurement Start (4000-series) (Sequence No. 434), 251
Statistic Processing Calculation Non-execution (3000-series) (Sequence No. 417), 241
Statistic Processing Execution (3000-series) (Sequence No. 416), 240
Statistic Processing Memory Clear (3000-series) (Sequence No. 419), 241
Statistic Result Request (3000-series) (Sequence No. 420), 241
Zero Run Measurement Start (3000-series) (Sequence No. 411), 239

sequences, E5_J Temperature Controller
General-purpose Read (Sequence No. 216), 147
General-purpose Write (Sequence No. 216), 147
Read Heater Current (Sequence No. 214), 146
Read Initial Status (Sequence No. 215), 146
Read Input Shift Value (Sequence No. 210), 144
Read Output Value (Sequence No. 211), 145
Read Parameters 1 (Sequence No. 208), 142
Read Parameters 2 (Sequence No. 209), 143
Read Process Value (Sequence No. 212), 145
Read Set Point Limit (Sequence No. 213), 145
Save Set Point (Sequence No. 204), 139
Select Backup Mode (Sequence No. 202), 139
Select Local Mode (Sequence No. 201), 139
Select RAM Write Mode (Sequence No. 203), 139
Select Remote Mode (Sequence No. 200), 138
Write Input Shift Value (Sequence No. 207), 141
Write Parameters 1 (Sequence No. 205), 140
Write Parameters 2 (Sequence No. 206), 141

sequences, E5_K Digital Controller
Execute/Cancel AT (Sequence No. 074), 90
General-purpose Read (Sequence No. 023), 76
General-purpose Write (Sequence No. 070), 88
Read Alarm Hysteresis (Sequence No. 016), 68
Read Alarm Value (Sequence No. 004), 63
Read Control Period (Sequence No. 010), 65
Read Cooling Coefficient (Sequence No. 006), 64
Read Dead Band (Sequence No. 007), 64
Read Hysteresis (Sequence No. 009), 65

Read Input Digital Filter (Sequence No. 015), 68
Read Input Shift Limits (Sequence No. 017), 68
Read LBA Detection Time (Sequence No. 012), 66
Read Level 0 Parameters (Sequence No. 018), 69
Read Level 1 Parameters 1 (Sequence No. 019), 70
Read Level 1 Parameters 2 (Sequence No. 020), 71
Read Level 2 Parameters 1 (Sequence No. 021), 73
Read Level 2 Parameters 2 (Sequence No. 022), 74
Read Manual Reset Value (Sequence No. 008), 64
Read MV (Sequence No. 002), 62
Read MV at Stop Time and at PV Error (Sequence No.013), 67
Read MV Limits (Sequence No. 014), 67
Read Process Value (Sequence No. 000), 61
Read Proportional Band, Integral Time, and Derivative Time (Sequence No. 005), 63
Read Set Point (Sequence No. 003), 62
Read Set Point during SP Ramp (Sequence No. 001), 61
Read SP Ramp Time Unit and Set Value (Sequence No. 011), 66
Remote/Local (Sequence No. 073), 89
Run/Stop (Sequence No. 072), 89
Software Reset (Sequence No. 076), 91
Switch to Level 0 (Software Reset) (Sequence No. 071), 88
Switch to Level 1 (Sequence No. 075), 91
Write Alarm Hysteresis (Sequence No. 063), 82
Write Alarm Value (Sequence No. 051), 78
Write Control Period (Sequence No. 057), 80
Write Cooling Coefficient (Sequence No. 053), 79
Write Dead Band (Sequence No. 054), 79
Write Hysteresis (Sequence No. 056), 79
Write Input Digital Filter (Sequence No. 062), 82
Write Input Shift Value (Sequence No. 064), 82
Write LBA Detection Time (Sequence No. 059), 81
Write Level 0 Parameters (Sequence No. 065), 83
Write Level 1 Parameter 2 (Sequence No. 067), 85
Write Level 1 Parameters 1 (Sequence No. 066), 84
Write Level 2 Parameters 1 (Sequence No. 068), 86
Write Level 2 Parameters 2 (Sequence No. 069), 87
Write Manual Reset Value (Sequence No. 055), 79
Write MV at Stop Time and at PV Error (Sequence No. 060), 81
Write MV Limits (Sequence No. 061), 81
Write Proportional Band, Integral Time, and Derivative Time (Sequence No. 052), 78
Write Set Point (Sequence No. 050), 78
Write SP Ramp Time Unit and Set Value (Sequence No. 058), 80

sequences, E5ZE Temperature Controller
Cancel Autotuning (Sequence No. 160), 125
Initialize Settings (Sequence No. 169), 130
Read Alarm Mode (Sequence No. 107), 103
Read Alarm Temperatures (Sequence No. 108), 104
Read Control Period (Sequence No. 105), 102
Read Cooling Coefficient (Sequence No. 123), 114
Read Dead Band/Overlap Band (Sequence No. 122), 113
Read Error Status (Sequence No. 111), 106
Read HB Alarm and HS Alarm Valid Channels (Sequence No. 119), 111
Read Heater Burnout and SSR Failure Detection Currents (Sequence No. 120), 111
Read Heater Current and SSR Leakage Current (Sequence No.121), 112
Read Hysteresis (Sequence No. 109), 105
Read Input Shift Value (Sequence No. 113), 107
Read Manual Reset Value (Sequence No. 114), 107
Read Operation Status (Sequence No. 110), 105
Read Output Mode (Sequence No. 106), 103
Read Output Value Change Rate Limit (Sequence No. 118), 110
Read Output Value Limit (Sequence No. 117), 109
Read Output Values (Sequence No. 102), 99
Read Present Set Point (Sequence No. 116), 109
Read Process Value (Sequence No. 101), 98
Read Proportional Band, Integral Time, and Derivative Time (Sequence No. 104), 101
Read Ramp Value (Sequence No. 115), 108
Read Set Point (Sequence No. 100), 97
Read Set Point, Process Value, and Output Value (Sequence No. 103), 100
Read Setting Unit (Sequence No. 112), 106
Save Settings (Sequence No. 168), 130
Start Autotuning (Sequence No. 159), 124
Start Control (Sequence No. 174), 133
Start Manual Operation (Sequence No. 176), 134
Stop Operation or Control (Sequence No. 175), 133
Write Alarm Mode (Sequence No. 155), 121
Write Alarm Temperature (Setting Unit 0.1) (Sequence No. 157), 123
Write Alarm Temperature (Setting Unit 1) (Sequence No. 156), 122
Write Control Period (Sequence No. 153), 119
Write Cooling Coefficient (Sequence No. 173), 132
Write Dead Band/Overlap Band (Sequence No. 172), 132
Write HB and HS Alarm Valid Channels (Sequence No. 170), 131
Write Heater Burnout and SSR Failure Detection Current (Sequence No. 171), 131
Write Hysteresis (Sequence No. 158), 124
Write Input Shift Value (Sequence No. 162), 125
Write Manual Output Value (Sequence No. 165), 127
Write Manual Reset Value (Sequence No. 163), 126
Write Output Mode (Sequence No. 154), 120
Write Output Value Change Rate Limit (Sequence No. 167), 129
Write Output Value Limit (Sequence No. 166), 128
Write Proportional Band, Integral Time, and Derivative Time (Sequence No. 152), 118
Write Ramp Value (Sequence No. 164), 127
Write Set Point (Setting Unit 0.1) (Sequence No. 151), 117
Write Set Point (Setting Unit 1) (Sequence No. 150), 116
Write Setting Unit (Sequence No. 161), 125

sequences, ES100_ Digital Controller
Auto Mode (Sequence No. 273), 183
Cancel A.T. (Sequence No. 276), 185
Change Bank No. (Sequence No. 278), 186
Change Pattern No. (Sequence No. 277), 186
Execute A.T. (Sequence No. 275), 184
External Setting Mode (Sequence No. 270), 181
General-purpose Command (Sequence No. 280), 188
Local Setting Mode (Sequence No. 269), 181
Manual Mode (Sequence No. 274), 184
Read Adjustment Parameters (Sequence No. 258), 163
Read Control Monitor Data (Sequence No. 257), 161
Read Controller Status (Sequence No. 279), 187
Read Error Detection Data (Sequence No. 252), 155
Read Event Data (Sequence No. 250), 153
Read Heater Burnout Data (Sequence No. 253), 157
Read Local SP (Sequence No. 264), 174
Read MV Data (Sequence No. 256), 160
Read PID Control Parameters 1 (Sequence No. 260), 167

Read PID Control Parameters 2 (Sequence No. 261), 169
Read Program Parameters (Sequence No. 266), 177
Read PV Data (Sequence No. 254), 158
Read SP Data (Sequence No. 255), 159
Read Time Signal (Sequence No. 251), 154
Remote Setting Mode (Sequence No. 268), 180
Reset (Stop) (Sequence No. 272), 183
Run Command (Sequence No. 271), 182
Write Adjustment Parameters (Sequence No. 259), 166
Write Local SP (Sequence No. 265), 176
Write PID Control Parameters 1 (Sequence No. 262), 171
Write PID Control Parameters 2 (Sequence No. 263), 173
Write Program Parameters (Sequence No. 267), 179

sequences, Hayes Modem AT Command
Data Send/Receive (General-purpose) (Sequence No. 553), 316
Dial (Sequence No. 561), 314
Dial (Sequence No. 571), 314
Dial (Sequence No. 581), 314
Escape (Sequence No. 554), 317
Escape to Hang Up (Sequence No. 590), 311
Hang Up (Sequence No. 555), 317
Initialize and Dial (Sequence No. 562), 311
Initialize and Dial (Sequence No. 572), 311
Initialize and Dial (Sequence No. 582), 311
Initialize Modem (Specialized) (Sequence No. 560), 313
Initialize Modem (Specialized) (Sequence No. 570), 313
Initialize Modem (Specialized) (Sequence No. 580), 313
Password (Sequence No. 552), 315
Set Modem (General-purpose) (Sequence No. 550), 313

sequences, V600/V620 ID Controller
Auto-read (ASCII/1) (Sequence No. 508), 290
Auto-read (Hexadecimal/1) (Sequence No. 509), 291
Auto-write (ASCII/1) (Sequence No. 526), 303
Auto-write (Hexadecimal/1) (Sequence No. 527), 303
Command Processing Cancel (Sequence No. 543), 308
Control (Sequence No. 541), 307
Data Check (Sequence No. 540), 306
Error Information Read (Sequence No. 542), 308
General-purpose Command (Sequence No. 546), 310
Polling Auto-read (ASCII) (Sequence No. 510), 291
Polling Auto-read (ASCII/2) (Sequence No. 511), 292
Polling Auto-read (ASCII/4) (Sequence No. 512), 292
Polling Auto-read (ASCII/4) (Sequence No. 513), 292
Polling Auto-read (Hexadecimal) (Sequence No. 514), 293
Polling Auto-read (Hexadecimal/2) (Sequence No. 515), 293
Polling Auto-read (Hexadecimal/4) (Sequence No. 516), 294
Polling Auto-read (Hexadecimal/8) (Sequence No. 517), 294
Polling Auto-read Command Processing Cancel (Sequence No. 544), 309
Polling Auto-write (ASCII/2) (Sequence No. 528), 303
Polling Auto-write (ASCII/4) (Sequence No. 530), 304
Polling Auto-write (ASCII/8) (Sequence No. 532), 304
Polling Auto-write (Hexadecimal/2) (Sequence No. 534), 305
Polling Auto-write (Hexadecimal/4) (Sequence No. 536), 305
Polling Auto-write (Hexadecimal/8) (Sequence No. 538), 306
Polling Auto-write Command Processing Cancel (Sequence No. 545), 309
Polling Auto-write Subcommand (ASCII/2) (Sequence No. 529), 304
Polling Auto-write Subcommand (ASCII/4) (Sequence No. 531), 304
Polling Auto-write Subcommand (ASCII/8) (Sequence No. 533), 304
Polling Auto-write Subcommand (Hexadecimal/2) (Sequence No. 535), 305
Polling Auto-write Subcommand (Hexadecimal/4) (Sequence No. 537), 305
Polling Auto-write Subcommand (Hexadecimal/8) (Sequence No. 539), 306
Read (ASCII/1) (Sequence No. 500), 282
Read (ASCII/2) (Sequence No. 501), 283
Read (ASCII/4) (Sequence No. 502), 284
Read (ASCII/8) (Sequence No. 503), 285
Read (Hexadecimal/1) (Sequence No. 504), 286
Read (Hexadecimal/2) (Sequence No. 505), 287
Read (Hexadecimal/4) (Sequence No. 506), 288
Read (Hexadecimal/8) (Sequence No. 507), 289
Write (ASCII/1) (Sequence No.518), 294
Write (ASCII/2) (Sequence No. 519), 295
Write (ASCII/4) (Sequence No. 520), 297
Write (ASCII/8) (Sequence No. 521), 298
Write (Hexadecimal/1) (Sequence No. 522), 299
Write (Hexadecimal/2) (Sequence No. 523), 300
Write (Hexadecimal/4) (Sequence No. 524), 301
Write (Hexadecimal/8) (Sequence No. 525), 302

sequences, Visual Inspection System
Arbitrary Measurement Value Acquisition (F200) (Sequence No. 457), 263
Binary Level Modification (F200/300) (Sequence No. 482), 272
Camera Change (Decrease by 1) (F200/300) (Sequence No. 480), 271
Camera Change (Increase by 1) (F200/300) (Sequence No. 481), 272
Camera Designation and Positioning (F350) (Sequence No. 471), 270
Character String Inspection and Character Inspection (F350) (Sequence No. 474), 271
Continuous Measurement Execution (Interrupt) (F200) (Sequence No. 452), 261
Continuous Measurement Execution (Interrupt) (F300) (Sequence No. 462), 267
Continuous Measurement Execution (Scan) (F200) (Sequence No. 451), 260
Continuous Measurement Execution (Scan) (F300) (Sequence No. 461), 265
Evaluation Condition Change (F200) (Sequence No. 456), 262
General-purpose Command (Send) (Sequence No. 494), 273
General-purpose Command (Send/Receive) (Sequence No. 495), 273
Illumination Fluctuation Follow Execution (F300) (Sequence No. 465), 269
Inspection Execution and Character Inspection (F350) (Sequence No. 473), 271
Measurement Execution (F200) (Sequence No. 450), 260
Measurement Execution (F300) (Sequence No. 460), 264
Measurement Execution and Positioning (F350) (Sequence No. 470), 269
Measurement, Inspection Termination (Sequence No. 493), 273
Reference Object Registration (Criterion) (F200) (Sequence No. 455), 262
Reference Object Registration (Group) (F200) (Sequence No. 453), 262

Reference Object Registration (Reference Position) (F200) (Sequence No. 454), 262
Reference Object Registration Command 1 Execution (F300) (Sequence No. 463), 268
Reference Object Registration Command 2 Execution (F300) (Sequence No. 464), 269
Reset (F200/300) (Sequence No. 483), 272
Scene Switching (Arbitrary) (Sequence No. 492), 273
Scene Switching (Decrease by 1) (Sequence No. 490), 272
Scene Switching (Increase by 1) (Sequence No. 491), 272
Scene Switching and Positioning (F350) (Sequence No. 472), 270

settings
communications sequence, 33
DIP switch, 8
RS-422A/485, 8

specifications, 12
RS-232C port, 12
RS-422A/485 port, 13

switches, 8
DIP, settings, 8

T—V

terminator, DIP switch settings, 9

time delay, 50

transmission method, 49

V600/V620 ID Controller
connections, 277
protocols, sequences, 275–310

Visual Inspection System
connections, 259
protocols, sequences, 257–274

Revision History

A manual revision code appears as a suffix to the catalog number on the front cover of the manual.

Cat. No. W304-E1-05

Revision code

The following table outlines the changes made to the manual during each revision. Page numbers refer to the previous version.

Revision code	Date	Revised content
1	June 1996	Original production
2	November 1997	Revision to add V1 Communications Boards. The following pages were changed. xii, ix, x (added), 2 to 11 (pages added), 15, 16, 18 (pages added), 20 (pages added), 23 to 28 (pages added), essentially all appendix pages (pages added).
3	December 1998	Additions and changes made to *PRECAUTIONS*. **Page 8:** Note added. **Pages 8, 12, 15, 22, 23, 24, 25, 29, 85, 88, 89, 127, 129, 130, 141, 143, 144, 183, 186, 202, 267, 270:** RS-422 changed to RS-422A. **Page 9:** Information changed for “Terminator.” Note added to graphic. **Page 46:** Graphic changed. **Page 52:** Number of connectable Units changed from 32 to 31. **Page 250:** “Receive” changed to “send/receive.” **Page 303:** Note added to table.
4	April 2000	Changes were made on the following pages. **Page ix:** Information on related manuals added. **Page xii-xiv:** Changes made to safety information in several places. **Pages 4, 32, 34:** Information on support software added. **Page 11:** Information on specifications added. **Pages 18:** Parenthetic information on modes added in several places. **Page 19:** Information on echoback disable functions added. **Pages 24, 52, 187:** Information on maximum number of connectable devices added. **Pages 25, 26, 28:** “7” replaced with “shell.” **Pages 29, 143, 186, 270:** Minor changes made to graphics. **Page 31:** Information on receive messages added. **Page 35:** Note added. **Pages 43, 44:** Bit addresses corrected. **Page 46:** Information on half-duplex mode and echoback added. **Page 47:** Error code added. **Page 48:** Information on Abort Flags added. **Page 188:** Minor changes made to tables. **Pages 189-192, 194, 195, 198, 200, :** “Most significant digit” changed to “5th BCD digit.”
05	November 2003	**Page 19:** Corrections made to error codes for bits 00 to 03 and 08 to 11 of SR 283.

OMRON Corporation
FA Systems Division H.Q.
66 Matsumoto
Mishima-city, Shizuoka 411-8511
Japan
Tel: (81)55-977-9181/Fax: (81)55-977-9045

Regional Headquarters

OMRON EUROPE B.V.
Wegalaan 67-69, NL-2132 JD Hoofddorp
The Netherlands
Tel: (31)2356-81-300/Fax: (31)2356-81-388

OMRON ELECTRONICS LLC
1 East Commerce Drive, Schaumburg, IL 60173
U.S.A.
Tel: (1)847-843-7900/Fax: (1)847-843-8568

OMRON ASIA PACIFIC PTE. LTD.
83 Clemenceau Avenue,
#11-01, UE Square,
Singapore 239920
Tel: (65)6835-3011/Fax: (65)6835-2711

OMRON

Authorized Distributor:

Cat. No. W304-E1-05

Note: Specifications subject to change without notice.

Printed in Japan

This manual is printed on 100% recycled paper.

Read and Understand this Manual

Please read and understand this manual before using the product. Please consult your OMRON representative if you have any questions or comments.

Warranty and Limitations of Liability

WARRANTY

OMRON's exclusive warranty is that the products are free from defects in materials and workmanship for a period of one year (or other period if specified) from date of sale by OMRON.

OMRON MAKES NO WARRANTY OR REPRESENTATION, EXPRESS OR IMPLIED, REGARDING NON-INFRINGEMENT, MERCHANTABILITY, OR FITNESS FOR PARTICULAR PURPOSE OF THE PRODUCTS. ANY BUYER OR USER ACKNOWLEDGES THAT THE BUYER OR USER ALONE HAS DETERMINED THAT THE PRODUCTS WILL SUITABLY MEET THE REQUIREMENTS OF THEIR INTENDED USE. OMRON DISCLAIMS ALL OTHER WARRANTIES, EXPRESS OR IMPLIED.

LIMITATIONS OF LIABILITY

OMRON SHALL NOT BE RESPONSIBLE FOR SPECIAL, INDIRECT, OR CONSEQUENTIAL DAMAGES, LOSS OF PROFITS OR COMMERCIAL LOSS IN ANY WAY CONNECTED WITH THE PRODUCTS, WHETHER SUCH CLAIM IS BASED ON CONTRACT, WARRANTY, NEGLIGENCE, OR STRICT LIABILITY.

In no event shall the responsibility of OMRON for any act exceed the individual price of the product on which liability is asserted.

IN NO EVENT SHALL OMRON BE RESPONSIBLE FOR WARRANTY, REPAIR, OR OTHER CLAIMS REGARDING THE PRODUCTS UNLESS OMRON'S ANALYSIS CONFIRMS THAT THE PRODUCTS WERE PROPERLY HANDLED, STORED, INSTALLED, AND MAINTAINED AND NOT SUBJECT TO CONTAMINATION, ABUSE, MISUSE, OR INAPPROPRIATE MODIFICATION OR REPAIR.

Application Considerations

SUITABILITY FOR USE

OMRON shall not be responsible for conformity with any standards, codes, or regulations that apply to the combination of products in the customer's application or use of the products.

At the customer's request, OMRON will provide applicable third party certification documents identifying ratings and limitations of use that apply to the products. This information by itself is not sufficient for a complete determination of the suitability of the products in combination with the end product, machine, system, or other application or use.

The following are some examples of applications for which particular attention must be given. This is not intended to be an exhaustive list of all possible uses of the products, nor is it intended to imply that the uses listed may be suitable for the products:

- Outdoor use, uses involving potential chemical contamination or electrical interference, or conditions or uses not described in this manual.
- Nuclear energy control systems, combustion systems, railroad systems, aviation systems, medical equipment, amusement machines, vehicles, safety equipment, and installations subject to separate industry or government regulations.
- Systems, machines, and equipment that could present a risk to life or property.

Please know and observe all prohibitions of use applicable to the products.

NEVER USE THE PRODUCTS FOR AN APPLICATION INVOLVING SERIOUS RISK TO LIFE OR PROPERTY WITHOUT ENSURING THAT THE SYSTEM AS A WHOLE HAS BEEN DESIGNED TO ADDRESS THE RISKS, AND THAT THE OMRON PRODUCTS ARE PROPERLY RATED AND INSTALLED FOR THE INTENDED USE WITHIN THE OVERALL EQUIPMENT OR SYSTEM.

PROGRAMMABLE PRODUCTS

OMRON shall not be responsible for the user's programming of a programmable product, or any consequence thereof.

Disclaimers

CHANGE IN SPECIFICATIONS

Product specifications and accessories may be changed at any time based on improvements and other reasons.

It is our practice to change model numbers when published ratings or features are changed, or when significant construction changes are made. However, some specifications of the products may be changed without any notice. When in doubt, special model numbers may be assigned to fix or establish key specifications for your application on your request. Please consult with your OMRON representative at any time to confirm actual specifications of purchased products.

DIMENSIONS AND WEIGHTS

Dimensions and weights are nominal and are not to be used for manufacturing purposes, even when tolerances are shown.

PERFORMANCE DATA

Performance data given in this manual is provided as a guide for the user in determining suitability and does not constitute a warranty. It may represent the result of OMRON's test conditions, and the users must correlate it to actual application requirements. Actual performance is subject to the OMRON Warranty and Limitations of Liability.

ERRORS AND OMISSIONS

The information in this manual has been carefully checked and is believed to be accurate; however, no responsibility is assumed for clerical, typographical, or proofreading errors, or omissions.