Cat. No. H119-E1-03

# E5ZN-DRT

## DeviceNet™ Communications Unit for E5ZN Temperature Controllers

# OPERATION MANUAL

OMRON

## NOTE

All rights reserved. No part of this publication may be reproduced, stored in a retrieval system, or transmitted, in any form, or by any means, mechanical, electronic, photocopying, recording, or otherwise, without the prior written permission of OMRON.

No patent liability is assumed with respect to the use of the information contained herein. Moreover, because OMRON is constantly striving to improve its high-quality products, the information contained in this manual is subject to change without notice. Every precaution has been taken in the preparation of this manual. Nevertheless, OMRON assumes no responsibility for errors or omissions. Neither is any liability assumed for damages resulting from the use of the information contained in this publication.

## Trademarks

• ODVA, CIP, CompoNet, DeviceNet, and EtherNet/IP are trademarks of ODVA.

Other company names and product names in this document are the trademarks or registered trademarks of their respective companies.

## Copyrights

Microsoft product screen shots reprinted with permission from Microsoft Corporation.

# E5ZN-DRT

# DeviceNet Communications Unit for E5ZN Temperature Controllers

## Operation Manual

*Produced August 2016*

# Notice:

OMRON products are manufactured for use according to proper procedures by a qualified operator and only for the purposes described in this manual.

The following conventions are used to indicate and classify precautions in this manual. Always heed the information provided with them. Failure to heed precautions can result in injury to people or damage to property.

⚠ **DANGER** Indicates an imminently hazardous situation which, if not avoided, will result in death or serious injury.

⚠ **WARNING** Indicates a potentially hazardous situation which, if not avoided, could result in death or serious injury.

⚠ **Caution** Indicates a potentially hazardous situation which, if not avoided, may result in minor or moderate injury, or property damage.

# OMRON Product References

All OMRON products are capitalized in this manual. The word “Unit” is also capitalized when it refers to an OMRON product, regardless of whether or not it appears in the proper name of the product.

The abbreviation “Ch,” which appears in some displays and on some OMRON products, often means “word” and is abbreviated “Wd” in documentation in this sense.

The abbreviation “PV” is used in this manual to indicate the process value of the E5ZN Temperature Controller.

The abbreviation “PLC” means Programmable Controller. “PC” is used, however, in some Programming Device displays to mean Programmable Controller.

# Visual Aids

The following headings appear in the left column of the manual to help you locate different types of information.

**Note** Indicates information of particular interest for efficient and convenient operation of the product.

***1,2,3...*** 1. Indicates lists of one sort or another, such as procedures, checklists, etc.

# Terms and Conditions Agreement

# Warranty, Limitations of Liability

## Warranties

● **Exclusive Warranty**

Omron's exclusive warranty is that the Products will be free from defects in materials and workmanship for a period of twelve months from the date of sale by Omron (or such other period expressed in writing by Omron). Omron disclaims all other warranties, express or implied.

● **Limitations**

OMRON MAKES NO WARRANTY OR REPRESENTATION, EXPRESS OR IMPLIED, ABOUT NON-INFRINGEMENT, MERCHANTABILITY OR FITNESS FOR A PARTICULAR PURPOSE OF THE PRODUCTS. BUYER ACKNOWLEDGES THAT IT ALONE HAS DETERMINED THAT THE PRODUCTS WILL SUITABLY MEET THE REQUIREMENTS OF THEIR INTENDED USE.

Omron further disclaims all warranties and responsibility of any type for claims or expenses based on infringement by the Products or otherwise of any intellectual property right.

● **Buyer Remedy**

Omron's sole obligation hereunder shall be, at Omron's election, to (i) replace (in the form originally shipped with Buyer responsible for labor charges for removal or replacement thereof) the non-complying Product, (ii) repair the non-complying Product, or (iii) repay or credit Buyer an amount equal to the purchase price of the non-complying Product; provided that in no event shall Omron be responsible for warranty, repair, indemnity or any other claims or expenses regarding the Products unless Omron's analysis confirms that the Products were properly handled, stored, installed and maintained and not subject to contamination, abuse, misuse or inappropriate modification. Return of any Products by Buyer must be approved in writing by Omron before shipment. Omron Companies shall not be liable for the suitability or unsuitability or the results from the use of Products in combination with any electrical or electronic components, circuits, system assemblies or any other materials or substances or environments. Any advice, recommendations or information given orally or in writing, are not to be construed as an amendment or addition to the above warranty.

See http://www.omron.com/global/ or contact your Omron representative for published information.

## Limitation on Liability; Etc

OMRON COMPANIES SHALL NOT BE LIABLE FOR SPECIAL, INDIRECT, INCIDENTAL, OR CONSEQUENTIAL DAMAGES, LOSS OF PROFITS OR PRODUCTION OR COMMERCIAL LOSS IN ANY WAY CONNECTED WITH THE PRODUCTS, WHETHER SUCH CLAIM IS BASED IN CONTRACT, WARRANTY, NEGLIGENCE OR STRICT LIABILITY.

Further, in no event shall liability of Omron Companies exceed the individual price of the Product on which liability is asserted.

# Application Considerations

## Suitability of Use

Omron Companies shall not be responsible for conformity with any standards, codes or regulations which apply to the combination of the Product in the Buyer's application or use of the Product. At Buyer's request, Omron will provide applicable third party certification documents identifying ratings and limitations of use which apply to the Product. This information by itself is not sufficient for a complete determination of the suitability of the Product in combination with the end product, machine, system, or other application or use. Buyer shall be solely responsible for determining appropriateness of the particular Product with respect to Buyer's application, product or system. Buyer shall take application responsibility in all cases.

NEVER USE THE PRODUCT FOR AN APPLICATION INVOLVING SERIOUS RISK TO LIFE OR PROPERTY WITHOUT ENSURING THAT THE SYSTEM AS A WHOLE HAS BEEN DESIGNED TO ADDRESS THE RISKS, AND THAT THE OMRON PRODUCT(S) IS PROPERLY RATED AND INSTALLED FOR THE INTENDED USE WITHIN THE OVERALL EQUIPMENT OR SYSTEM.

## Programmable Products

Omron Companies shall not be responsible for the user's programming of a programmable Product, or any consequence thereof.

# Disclaimers

## Performance Data

Data presented in Omron Company websites, catalogs and other materials is provided as a guide for the user in determining suitability and does not constitute a warranty. It may represent the result of Omron's test conditions, and the user must correlate it to actual application requirements. Actual performance is subject to the Omron's Warranty and Limitations of Liability.

## Change in Specifications

Product specifications and accessories may be changed at any time based on improvements and other reasons. It is our practice to change part numbers when published ratings or features are changed, or when significant construction changes are made. However, some specifications of the Product may be changed without any notice. When in doubt, special part numbers may be assigned to fix or establish key specifications for your application. Please consult with your Omron's representative at any time to confirm actual specifications of purchased Product.

## Errors and Omissions

Information presented by Omron Companies has been checked and is believed to be accurate; however, no responsibility is assumed for clerical, typographical or proofreading errors or omissions.

# TABLE OF CONTENTS


## PRECAUTIONS . . . . . xiii

1 Intended Audience . . . . . xiv
2 General Precautions . . . . . xiv
3 Safety Precautions . . . . . xiv
4 Operating Environment Precautions . . . . . xv
5 Application Precautions . . . . . xv
6 EC Directives . . . . . xvi

## SECTION 1
## Overview . . . . . 1

1-1 Features and System Configuration . . . . . 2
1-2 Specifications . . . . . 9
1-3 Connecting Temperature Controllers . . . . . 11
1-4 Initial Temperature Controller Settings . . . . . 13

## SECTION 2
## Operating Procedures . . . . . 15

2-1 Setup Procedure . . . . . 16
2-2 Startup Procedure . . . . . 17

## SECTION 3
## Parts, Installation, and Wiring . . . . . 21

3-1 Part Names and Functions . . . . . 22
3-2 Installation . . . . . 26
3-3 Wiring the Terminal Unit . . . . . 29
3-4 DeviceNet Communications Cables Wiring . . . . . 32

## SECTION 4
## Remote I/O Communications . . . . . 35

4-1 Allocation Method Overview . . . . . 36
4-2 Simple I/O Allocation . . . . . 40
4-3 Allocating I/O from the Configurator . . . . . 44
4-4 Allocating Data in the Master . . . . . 60
4-5 Ladder Programming Examples . . . . . 65

## SECTION 5
## Operations from the Configurator . . . . . 69

5-1 List of Operations from the Configurator . . . . . 70
5-2 Operations from the Edit Device Parameters Window . . . . . 71
5-3 Maintenance Mode Window . . . . . 83
5-4 DeviceNet Communications Unit Monitor . . . . . 88

# TABLE OF CONTENTS


## SECTION 6
## Explicit Message Communications . . . . . 89

6-1 Overview of Explicit Message Communications . . . . . 90
6-2 Sending CompoWay/F Commands to a Temperature Controller . . . . . 93
6-3 Examples Using CompoWay/F Commands . . . . . 97
6-4 Example of Sending Explicit Messages . . . . . 103
6-5 Sending Explicit Messages . . . . . 104

## SECTION 7
## Communications Performance . . . . . 109

7-1 Remote I/O Communications Characteristics . . . . . 110
7-2 Message Communications Characteristics . . . . . 118

## SECTION 8
## Troubleshooting and Maintenance . . . . . 121

8-1 Indicators and Error Processing. . . . . 122
8-2 Maintenance. . . . . 124

## Appendices

A Connecting to a Master from Another Company . . . . . 129
B List of Connectable Devices . . . . . 135

## Index. . . . . 139

## Revision History . . . . . 143

# About this Manual:

This manual describes the installation and operation of the E5ZN-DRT DeviceNet Communications Unit for E5ZN Temperature Controllers and includes the sections described below.

Please read this manual carefully and be sure you understand the information provided before attempting to install or operate the E5ZN-DRT DeviceNet Communications Unit. Be sure to read the precautions provided in the following section.

***Precautions*** provides general precautions for using the E5ZN-DRT DeviceNet Communications Unit, Programmable Controller, and related devices.

***Section 1*** introduces the features and system configuration of the E5ZN-DRT DeviceNet Communications Unit, the types of E5ZN Temperature Controller that can be used, and other basic information.

***Section 2*** outlines the basic operating procedures of the E5ZN-DRT DeviceNet Communications Unit.

***Section 3*** describes the methods used to install and wire the E5ZN-DRT DeviceNet Communications Unit and the E5ZN Temperature Controller. The settings of DeviceNet Communications Unit switches are also described.

***Section 4*** describes the input (IN) areas and output (OUT) areas that E5ZN-DRT DeviceNet Communications Units can use for remote I/O communications. The methods to allocate data for master communications are also described.

***Section 5*** describes the DeviceNet Configurator operations that can be used for the E5ZN-DRT DeviceNet Communications Unit except for allocation procedures, which are described in *SECTION 4 Remote I/O Communications*.

***Section 6*** describes how to send explicit messages to the E5ZN-DRT DeviceNet Communications Unit, including how to send CompoWay/F commands using explicit messages. CompoWay/F commands are supported by the E5ZN Temperature Controller.

***Section 7*** provides information on the time required for a complete communications cycle, for an output response to be made to an input, to start the system, and to send messages.

***Section 8*** describes error processing, periodic maintenance operations, and troubleshooting procedures needed to keep the DeviceNet Network operating properly. Details on resetting replaced Units are also provided. Read through the error processing procedures in both this manual and the operation manual for the DeviceNet master being used before operation so that operating errors can be identified and corrected more quickly.

The ***Appendices*** provide the handling methods for EDS setting files required for multivender environments, the device profile of the E5ZN-DRT DeviceNet Communications Unit, and information on related products.

⚠ **WARNING** Failure to read and understand the information provided in this manual may result in personal injury or death, damage to the product, or product failure. Please read each section in its entirety and be sure you understand the information provided in the section and related sections before attempting any of the procedures or operations given.

# PRECAUTIONS

This section provides general precautions for using the E5ZN-DRT DeviceNet Communications Unit, Programmable Controller, and related devices.

**The information contained in this section is important for the safe and reliable application of the DeviceNet Communications Unit. You must read this section and understand the information contained before attempting to set up or operate a DeviceNet Communications Unit and PLC system.**


1 Intended Audience . . . . . xiv
2 General Precautions . . . . . xiv
3 Safety Precautions . . . . . xiv
4 Operating Environment Precautions . . . . . xv
5 Application Precautions . . . . . xv
6 EC Directives . . . . . xvi

# 1 Intended Audience

This manual is intended for the following personnel, who must also have knowledge of electrical systems (an electrical engineer or the equivalent).

- Personnel in charge of introducing FA equipment
- Personnel in charge of designing FA systems
- Personnel in charge of installing and connecting FA equipment
- Personnel in charge of managing FA systems and facilities

# 2 General Precautions

The user must operate the product according to the performance specifications described in the operation manuals.

Before using the product under conditions which are not described in the manual or applying the product to nuclear control systems, railroad systems, aviation systems, vehicles, combustion systems, medical equipment, amusement machines, safety equipment, and other systems, machines, and equipment that may have a serious influence on lives and property if used improperly, consult your OMRON representative.

Make sure that the ratings and performance characteristics of the product are sufficient for the systems, machines, and equipment, and be sure to provide the systems, machines, and equipment with double safety mechanisms.

This manual provides information for installing and operating OMRON DeviceNet Communications Units. Be sure to read this manual before operation and keep this manual close at hand for reference during operation.

**⚠ WARNING** It is extremely important that a PLC and all PLC Units be used for the specified purpose and under the specified conditions, especially in applications that can directly or indirectly affect human life. You must consult with your OMRON representative before applying a PLC system to the above mentioned applications.

# 3 Safety Precautions

**⚠ WARNING** Provide emergency stop circuits, external interlock circuits, limit circuits, and other safety circuits in addition to any provided within the PLC to ensure safety in the event of errors resulting from product failure or external causes. This measures must also be provided as external measures, not only in the PLC. Incorrect operation can result in serious accidents.

**⚠ Caution** Always connect terminal screws and cable connector screws to the specified torque. Loose screws can result in fires or faulty operation.
Communications cable connector screws: 0.25 and 0.3 N·m
Terminal screws: 0.40 to 0.56 N·m.

**⚠ Caution** Confirm safety at the destination node before transferring a program to another node or changing contents of the I/O memory area. Doing either of these without confirming safety may result in injury.

**⚠ Caution** Execute online edit only after confirming that no adverse effects will be caused by extending the cycle time. Otherwise, the input signals may not be readable.

⚠ **Caution** Never touch any of the terminals while power is being supplied. Doing so may result in serious electrical shock or electrocution.

⚠ **Caution** Never attempt to disassemble any Units while power is being supplied. Doing so may result in serious electrical shock or electrocution.

⚠ **Caution** Do not allow any pieces of metal or conductive materials to enter the Unit. They can cause electric shock, fire, or Unit failure.

# 4 Operating Environment Precautions

⚠ **Caution** Do not operate the control system in the following locations:

- Locations subject to direct sunlight
- Locations subject to severe changes in temperature, condensation, or icing
- Locations subject to dust or corrosive gases (particularly sulfurized or ammonia gas)
- Locations subject to exposure to water, oil, or chemicals.
- Locations subject to shock or vibration.

⚠ **Caution** Take appropriate and sufficient countermeasures when installing systems in the following locations:

- Locations subject to static electricity or other forms of noise.
- Locations subject to strong electromagnetic fields.
- Locations subject to possible exposure to radioactivity.
- Locations close to power supplies.

⚠ **Caution** Do not operation the control system in locations subject to temperatures or humidity outside the range specified in the specifications.

⚠ **Caution** The operating environment of the PLC System can have a large effect on the longevity and reliability of the system. Improper operating environments can lead to malfunction, failure, and other unforeseeable problems with the PLC System. Be sure that the operating environment is within the specified conditions at installation and remains within the specified conditions during the life of the system.

# 5 Application Precautions

Observe the following precautions when using the DeviceNet Communications Unit or the PLC.

⚠ **Caution** Do not exceed the communications distances given in the specifications.

⚠ **Caution** Do not lay communications cables near or parallel to high-voltage lines or power supply lines.

⚠ **Caution** Use the specified communications cables.

⚠ **Caution** Do not attempt to disassemble, repair, or modify any Units. Any attempt to do so may result in malfunction, fire, or electric shock.

⚠ **Caution** Do not drop the Unit or expose it to excessive shock or vibration. Unit failure or malfunction may result.

⚠ **Caution** Always use the power supply voltages specified in the operation manuals. An incorrect voltage may result in malfunction or burning.

⚠ **Caution** Connect terminals with the correct polarity and lay communications and power supply lines correctly. System failure can result if these are not performed correctly.

⚠ **Caution** Do not connect or disconnect any connectors while the power supply is turned ON. System failure or malfunction may occur.

⚠ **Caution** Double-check all wiring and switch settings before turning ON the power supply. Incorrect wiring may result in burning.

⚠ **Caution** Take appropriate measures to ensure that the specified power with the rated voltage and frequency is supplied. Be particularly careful in places where the power supply is unstable. An incorrect power supply may result in malfunction.

⚠ **Caution** Do not use organic solvents to clean the Unit.

⚠ **Caution** Do not replace the Unit while the power supply is turned ON.

# 6 EC Directives

- EMC Directives
- Low Voltage Directive

## 6-1 Concepts

**EMC Directives**

OMRON devices that comply with EC Directives also conform to the related EMC standards so that they can be more easily built into other devices or the overall machine. The actual products have been checked for conformity to EMC standards. Whether the products conform to the standards in the system used by the customer, however, must be checked by the customer.

EMC-related performance of the OMRON devices that comply with EC Directives will vary depending on the configuration, wiring, and other conditions of the equipment or control panel on which the OMRON devices are installed. The customer must, therefore, perform the final check to confirm that devices and the overall machine conform to EMC standards.

## 6-2 Conformance to EC Directives

The E5ZN-DRT DeviceNet Communications Unit complies with EC Directives. To ensure that the machine or device in which the Unit is used complies with EC Directives, the Unit must be installed as follows:

***1,2,3...***

1. The Unit must be installed within a control panel.
2. You must use reinforced insulation or double insulation for the DC power supplies used for the communications power supply, internal power supply, and I/O power supplies.
3. Units complying with EC Directives also conform to the Common Emission Standard (EN50081-2). Radiated emission characteristics (10-m regulations) may vary depending on the configuration of the control panel used, other devices connected to the control panel, wiring, and other conditions. You must therefore confirm that the overall machine or equipment complies with EC Directives.

The following example shows one means of reducing noise.

***1,2,3...***

1. Noise from the communications cable can be reduced by installing a ferrite core on the communications cable within 10 cm of the DeviceNet Unit.

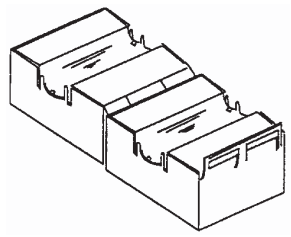

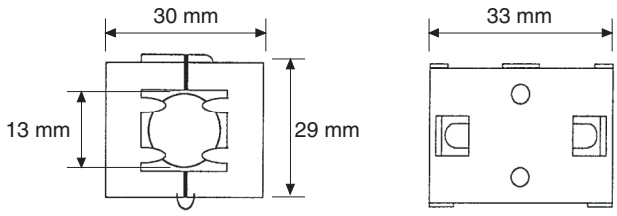


Ferrite Core (Data Line Filter): 0443-164151 (manufactured by Fair-Rite Products Co., Ltd.)

Impedance specifications

25 MHz: 105 Ω

100 MHz: 190 Ω

30 mm

13 mm

29 mm

33 mm

2. Wire the control panel with as thick and short electric lines as possible and ground to 100 Ω min.
3. Keep DeviceNet communications cables as short as possible and ground to 100 Ω min.

# SECTION 1
# Overview

This section introduces the features and system configuration of the E5ZN-DRT DeviceNet Communications Unit, the types of E5ZN Temperature Controller that can be used, and other basic information.


1-1 Features and System Configuration . . . . . 2
1-1-1 Features . . . . . 2
1-1-2 Overview of Unit Communications Functions . . . . . 4
1-1-3 System Configuration . . . . . 7
1-2 Specifications . . . . . 9
1-2-1 DeviceNet Communications Specifications . . . . . 9
1-2-2 Function and Performance Specifications . . . . . 10
1-2-3 General Specifications . . . . . 11
1-3 Connecting Temperature Controllers . . . . . 11
1-3-1 Temperature Controller ID and Number of Connectable Units . . . . 11
1-3-2 Temperature Controller Communications . . . . . 12
1-3-3 Temperature Controller Models . . . . . 12
1-3-4 Temperature Controller Power Supply . . . . . 12
1-3-5 Temperature Controller Registration . . . . . 13
1-4 Initial Temperature Controller Settings . . . . . 13

# 1-1 Features and System Configuration

## 1-1-1 Features

The DeviceNet Communications Unit enables a DeviceNet master to communicate with multiple E5ZN Temperature Controllers through the DeviceNet to monitor their process values, write parameters, and control operation.

### Using DeviceNet Functions

**Simultaneously Managing Multiple Temperature Controllers from the Master**

Up to 16 Temperature Controllers can be connected to a single DeviceNet Communications Unit. The DeviceNet Communications Unit is connected to the master as a DeviceNet slave. Up to 63 slaves can be connected to a single master, so multiple DeviceNet Communications Units and other types of slaves can be managed as part of the same system.

**Remote I/O Communications**

The master and DeviceNet Communications Units can share I/O by using remote I/O communications. Data in the E5ZN Temperature Controllers, such as process values (PVs) and set points (SPs), can be allocated for communications with the master to enable sending and receiving the allocated data via remote I/O communications, without requiring special programming.

- Remote I/O Communications without a Configurator
  Using the DeviceNet Communications Unit, basic Temperature Controller data can be allocated for communications with the master, such as process values (PVs) and set points (SPs), without requiring a Configurator. This is called “simple I/O allocation.” Simple I/O allocation can be easily set from the DIP switch on the rear of the DeviceNet Communications Unit.
- User-set Data Allocations with a Configurator
  The specific data required for communications with the master can also be allocated by using I/O allocations from the Configurator.

**Explicit Message Communications**

By executing commands from the PLC, various operations can be performed, including reading/writing specific parameters, such as reading process values or writing set points, and performing operations using operation commands. CompoWay/F communications commands can also be executed using explicit message communications.

**Setting, Monitoring, and Operating the Temperature Controller from the Configurator**

The Configurator can be used to create the device parameters for the DeviceNet Communications Unit, including settings for the DeviceNet Communications Unit and setting for the Temperature Controllers. The Configurator can then be used to download the parameters together to the DeviceNet Communications Unit and Temperature Controllers. (See note.)

The Configurator can also be used to monitor Temperature Controller process values, and execute operation commands for the Temperature Controllers. The Configurator can be used to copy parameters between Temperature Controller channels, allowing the initial parameters of Temperature Controllers requiring the same or similar parameters to be easily set.

**Automatically Detects Baud Rate**

Previously, the baud rate had to be set for each slave, but the DeviceNet Communications Unit automatically detects and matches the baud rate of the master, so this setting is not required. (If the master's baud rate is changed, turn OFF the communications power supply to the DeviceNet Communications Unit and then turn it ON again.)

## Wide Range of Maintenance Functions

**Copy Function (Uploading or Downloading Temperature Controller Parameters)**

Parameters for all Temperature Controllers connected to the DeviceNet Communications Unit can be uploaded or downloaded together. (The parameters that have been read are stored in the DeviceNet Communications Unit.) When Temperature Controllers are replaced, the new Controllers can be easily reset onsite without using a Configurator.

**Monitoring Network Power Voltage**

The DeviceNet network communications power voltage values (present value, peak value, and bottom value) can be stored in the DeviceNet Communications Unit, and the recorded voltages can be read from the Configurator. By setting the voltage monitor value in the DeviceNet Communications Unit, notification will be sent to the master if the voltage level drops below the monitor value.

**Monitoring the Unit Conduction Time**

The conduction time of the DeviceNet Communications Unit's internal circuit power supply can be recorded. The recorded conduction time can be read from the Configurator or using explicit messages. By setting a monitor value for the conduction time in the DeviceNet Communications Unit, notification will be sent to the master when the total time exceeds the monitor value.

**Unit Comments**

Any name can be set for a DeviceNet Communications Unit and recorded in the Unit. Specifying names enables the user to easily differentiate the applications of the DeviceNet Communications Units when setting and monitoring them from the Configurator.

**Setting Temperature Controller Comments**

A name can be set for each Temperature Controller channel connected to the DeviceNet Communications Unit and recorded in the DeviceNet Communications Unit. Specifying names enables the user to easily differentiate the function of each channel when setting and monitoring them from the Configurator.

**Monitoring Communications Error History**

The error status for the last four communications errors (the causes and communications power voltage when the communications error occurred) can be recorded in the DeviceNet Communications Unit. The recorded communications error history can be read from the Configurator.

**Monitoring Temperature Controller Power Status**

The power supply to the Temperature Controllers can monitored to confirm that power is ON and send notification of the status to the master. (The power status can be checked for Temperature Controllers connected to the DeviceNet Communications Unit only.) The power status of the Temperature Controllers can be read from the Configurator or using explicit messages.

**Monitor Temperature Controller Conduction Time and RUN Time**

The conduction time of the Temperature Controller's internal circuit power supply or the RUN time of the Temperature Controller can be totaled and recorded. (Select whether to total the conduction time or RUN time by setting the monitor mode.) The recorded total time can be read using the Configurator or explicit messages. By setting a monitor value in the DeviceNet Communications Unit, notification will be sent to the master if the Unit conduction time exceeds the monitor value.

## Easy Expansion

**Connecting Existing Terminal Units**

DeviceNet Communications Units can be connected to the Terminal Units used for previous (non-DeviceNet) E5ZN Temperature Controllers, so existing Temperature Controllers can easily be connected to DeviceNet.

**Internal Circuit Power Supply for Slaves Not Required**

The internal circuit power of the DeviceNet Communications Unit is supplied from the DeviceNet communications power supply. Therefore, power supply wiring is not required for the DeviceNet Communications Unit. (The Temperature Controller power supply must be supplied separately.)

## 1-1-2 Overview of Unit Communications Functions

### Remote I/O Communications

DeviceNet Communications Unit data is shared with the master's IN Area and OUT Area through DeviceNet. Up to 100 words (200 bytes) each can be used as the IN Area and OUT Area for the DeviceNet Communications Unit. (The first two words (four bytes) of the OUT Area are always allocated as Output Enable Bits).

The IN Area is allocated for data such as the communications status and the process values of the Temperature Controller channels and the OUT Area is allocated for the set points of the channels and other data.

When using a CS/CJ-series DeviceNet Unit as the master, the IN Area can be divided into two areas. One is normally used for input data (such as Temperature Controller process values), and the other can be used for reading status (such as Temperature Controller status). Even when the IN Area is divided into two areas, however, the total number of words that can be used for the IN Area is still 100 words (200 bytes).

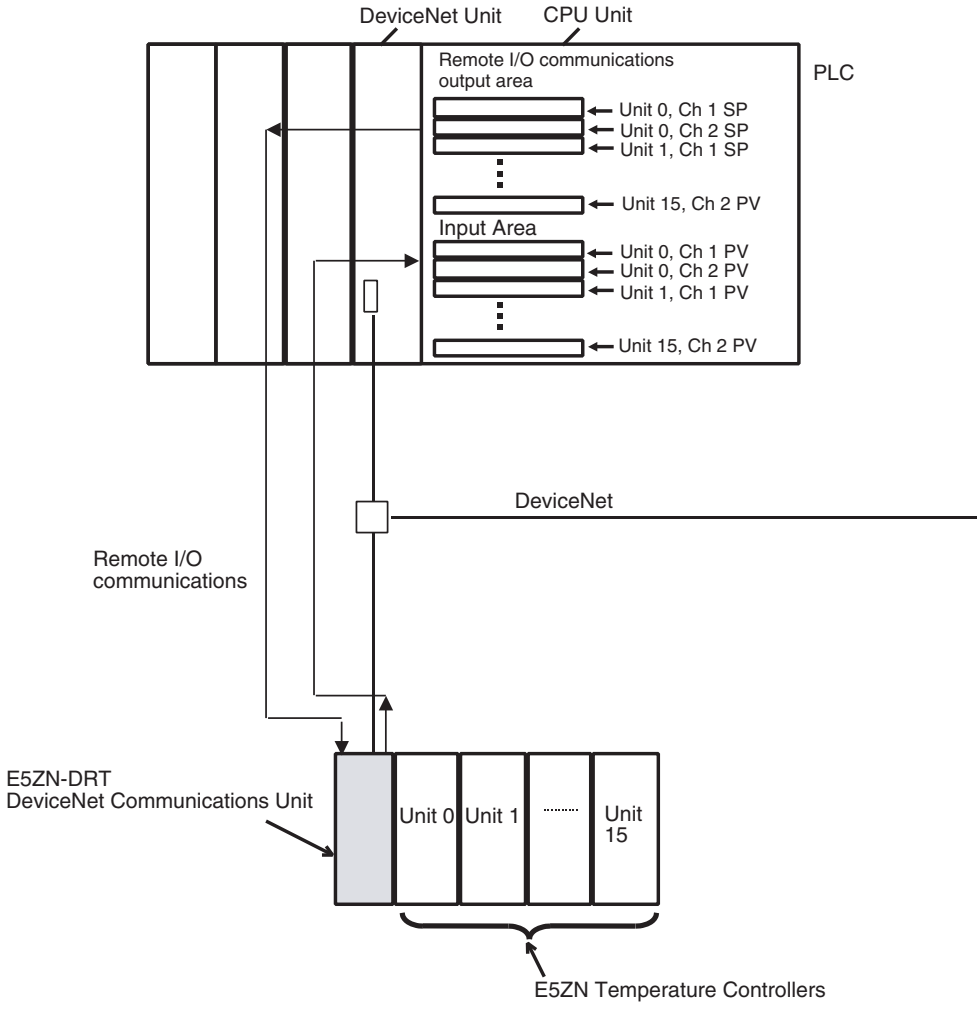

## Explicit Message Communications

Explicit message commands can be sent from the master to the DeviceNet Communications Unit to read or write the parameters of the connected Temperature Controllers. CompoWay/F communications commands that were previously used for Temperature Controllers can also be sent (in explicit message format).

The DeviceNet Communications Unit's own parameters can also be read or written.

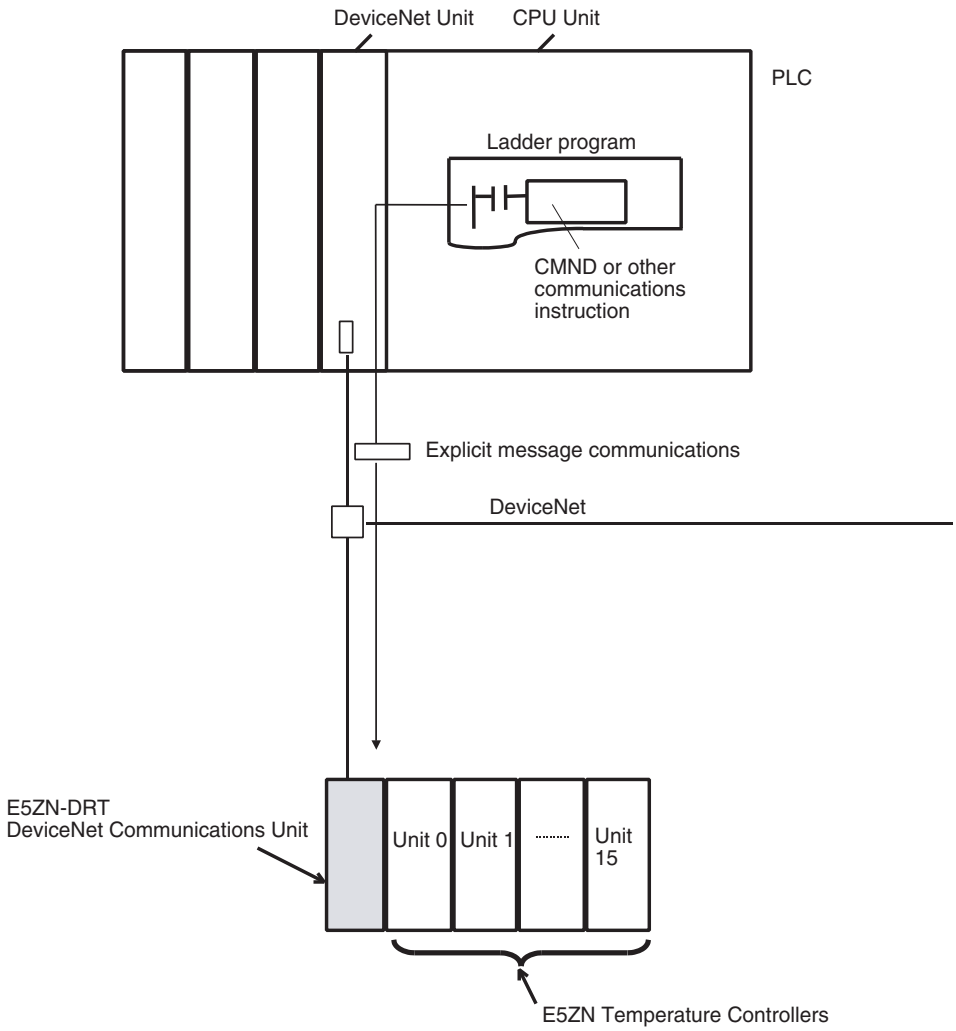

## Transferring, Monitoring, and Operating from the Configurator

Any of the Temperature Controller parameters can be read or written from a personal computer using the Configurator (Ver. 2.31 or later), and then saved as a file.

The setup parameters for each Temperature Controller channel can be copied, allowing the same or similar settings to be easily set for multiple Temperature Controllers.

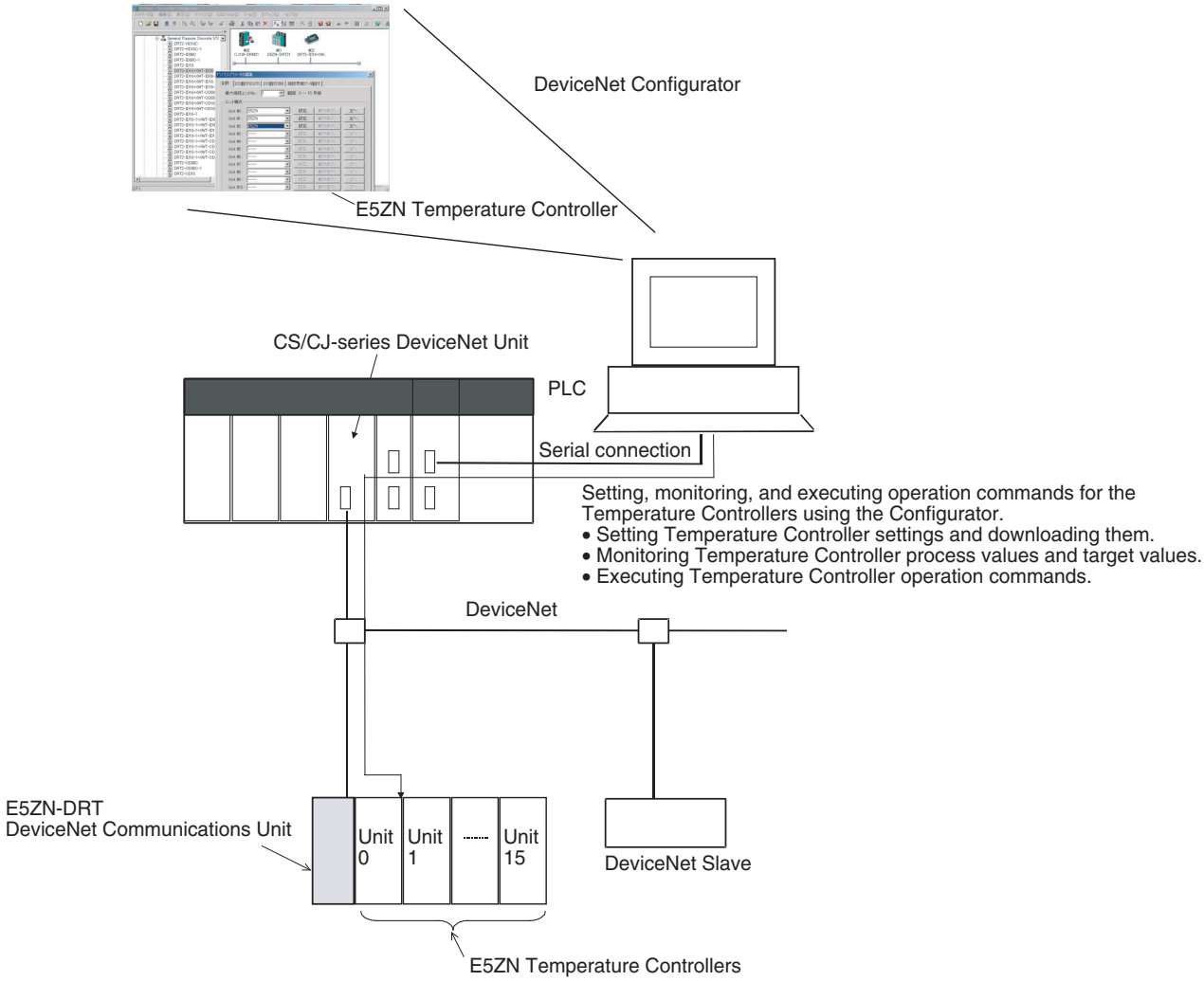

## 1-1-3 System Configuration

**The DeviceNet Communications Unit and Temperature Controllers are configured as a single block.**

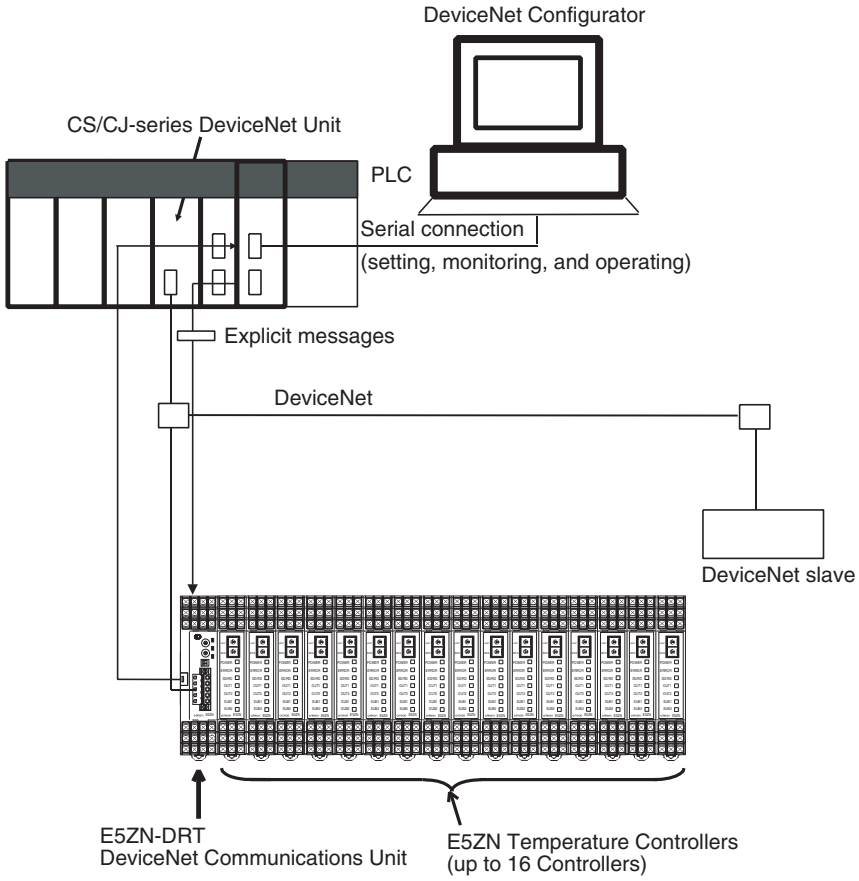


Connect the master to the DeviceNet Communications Unit, and connect the DeviceNet Communications Unit to the Temperature Controllers through the Terminal Units.

The DeviceNet Communications Unit and Temperature Controllers can be connected without using RS-485 communications cable.

The DeviceNet Communications Unit shares I/O with the master as a DeviceNet slave, and can send data to and receive data from the master using explicit messages.

Up to 63 slaves can be connected to a single master. Up to 16 Temperature Controllers can be connected to a single DeviceNet Communications Unit.

**Note** Always connect the DeviceNet Communications Unit to the E5ZN-SCT24S Terminal Unit on the left end of the block.

## Multiblock Configuration Using RS-485 Communications Connections

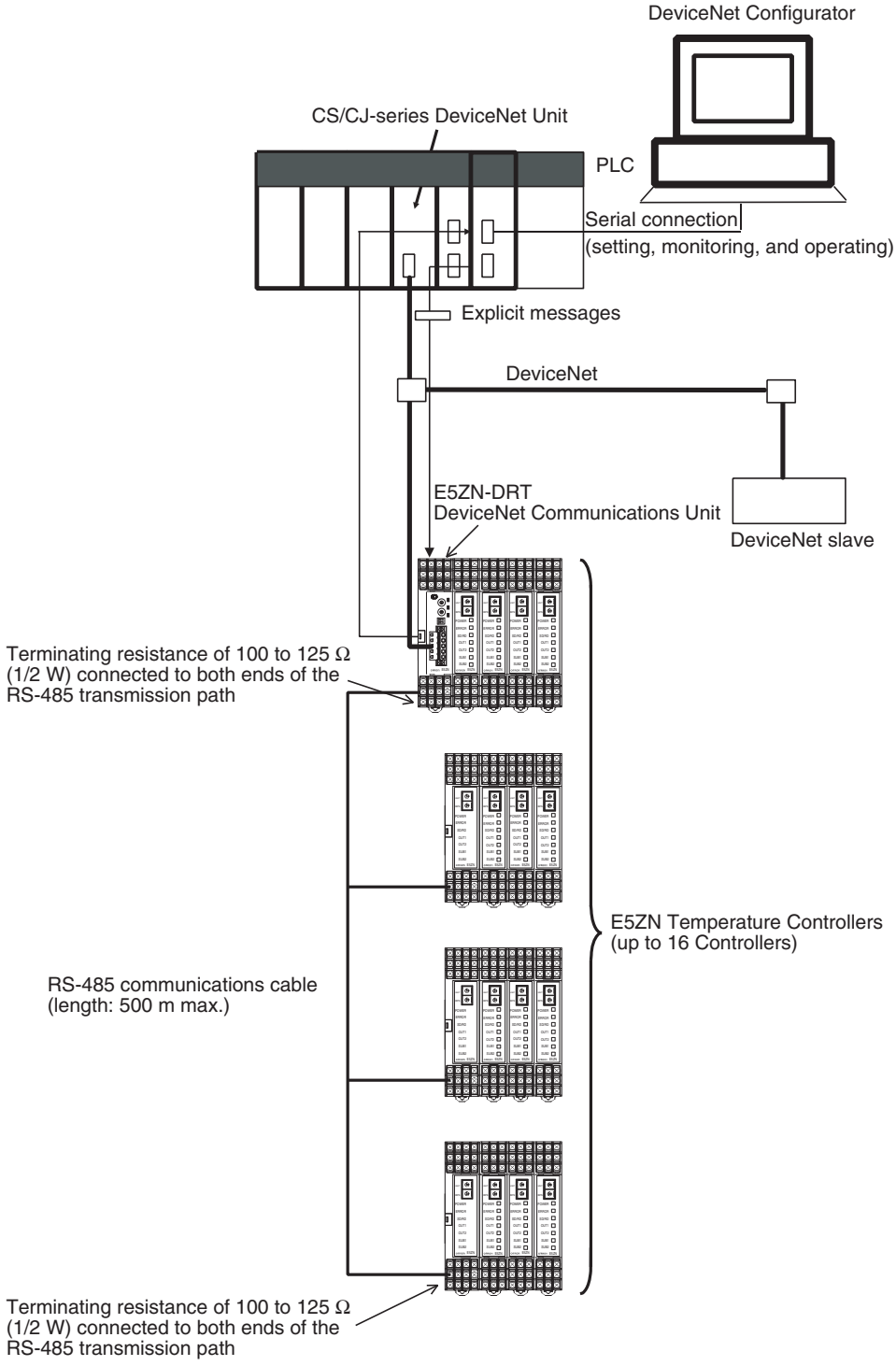


Connect the master and DeviceNet Communications Unit, and then use RS-485 communications to connect the Temperature Controllers divided into multiple blocks. Connect the DeviceNet Communications Unit to any one of the blocks. Connect each block with the Terminal Unit on the end.

The total cable length for RS-485 communications can be up to 500 m, so Temperature Controllers located at a distance can be operated using a single DeviceNet Communications Unit.

Up to 63 slaves can be connected to a single master. Up to 16 Temperature Controllers total for all blocks can be connected to a single DeviceNet Communications Unit.

Terminating resistance of 100 to 125 Ω (1/2 W) must be connected to both ends of the RS-485 communications transmission path. For details on RS-485 communications with Temperature Controllers, refer to the *E5ZN Temperature Controller Operation Manual* (H113).

**Note** Connect the DeviceNet Communications Unit to the E5ZN-SCT24S Terminal Unit on the left end of any one of the blocks.

# 1-2 Specifications

## 1-2-1 DeviceNet Communications Specifications

| Item | | Specifications |
|---|---|---|
| Communications protocol | | Conforms to DeviceNet |
| Communications functions | Remote I/O communications | • Master-slave connections (polling, bit-strobe, COS, or cyclic)<br>• Conform to DeviceNet specifications. |
| | Simple I/O allocation | • Allocates I/O data using switch settings only, without a Configurator.<br>• I/O is allocated for Temperature Controller statuses, process values, set points, alarm output status, and other basic data only.<br>• One block for IN area, up to 46 words (words are allocated through the maximum number of units connected)<br>• One block for OUT area, up to 38 words (words are allocated through the maximum number of units connected) |
| | I/O allocations from the Configurator | • Can be used to allocate any I/O data from the Configurator.<br>• Can be used to allocate any data, such as parameters specific to the DeviceNet Communications Unit and the Temperature Controller variable area.<br>• Up to 2 blocks for the IN area, up to a total of 100 words. (See note 1.)<br>• One block for OUT area 1 block, up to 100 words (first two words are always allocated to Output Enable Bits). (See note 2.) |
| | Message communications | • Explicit message communications<br>• CompoWay/F communications commands can be sent (commands are sent in explicit message format). |
| | Setting, monitoring and controlling operations from the Configurator | Supported by DeviceNet Configurator (using the Edit Parameters and Device Monitor functions of the DeviceNet Communications Unit and Temperature Controllers).<br>• Used to set and monitor the DeviceNet Communications Unit.<br>• Used to register connection configurations, make initial settings (see note 3), change settings, and monitor the Temperature Controllers.<br>• Use to allocates data for master communications.<br>• Used to allocates word in the IN and OUT Areas for specific data.<br>• Used to sends operation commands to the Temperature Controllers. |
| Connection format | | Combination of multidrop and T-branch connections (for trunk and drop lines) |
| Baud rate | | DeviceNet: 500, 250, or 125 kbps, or automatic detection of master baud rate<br>RS-485: 38.4 kbps |
| Communications media | | Special 5-wire cable (2 signal lines, 2 power lines, and 1 shield line) |

| Item | Specifications | | | |
|---|---|---|---|---|
| Communications distance | Baud rate | Network length | Drop line length | Total drop line length |
| | 500 kbps | 100 m max.<br>(100 m max.) | 6 m max. | 39 m max. |
| | 250 kbps | 250 m max.<br>(100 m max.) | 6 m max. | 78 m max. |
| | 125 kbps | 500 m max.<br>(100 m max.) | 6 m max. | 156 m max. |
| | The values in parentheses apply when Thin Cables are used. | | | |
| Communications power supply | 11 to 25 VDC | | | |
| Maximum number of nodes that can be connected | 64 (includes Configurator when used.) | | | |
| Maximum number of slaves that can be connected | 63 | | | |
| Error control | CRC error detection | | | |
| Power supply | Power supplied from DeviceNet communications connector (DeviceNet communications power supply and DeviceNet Communications Unit internal circuit power supply) | | | |

**Note**

1. When a CS/CJ-series DeviceNet Unit is used as the master, two blocks can be used for the IN Area (the connections can also be set). When a CVM1, CV-series, or C200HX/HG/HE DeviceNet Master Unit is used, the IN Area must be in 1 block, and up to 100 words (200 bytes) are allocated. (Only polling connections can be used.)
2. When a CVM1, CV-series, or C200HX/HG/HE DeviceNet Master Unit is used, up to 32 words can be allocated in the master for a single node.
3. The set points, alarm setting values, PID constants, and other Temperature Controller parameters can be set together.

## 1-2-2 Function and Performance Specifications

| Item | Specifications | |
|---|---|---|
| Maximum number of Temperature Controllers that can be connected | 16 | |
| Applicable Temperature Controllers | • E5ZN-2QNH03TC-FLK<br>• E5ZN-2QPH03TC-FLK<br>• E5ZN-2TNH03TC-FLK<br>• E5ZN-2TPH03TC-FLK<br>• E5ZN-2CNF03TC-FLK<br>• E5ZN-2CPF03TC-FLK | • E5ZN-2QNH03P-FLK<br>• E5ZN-2QPH03P-FLK<br>• E5ZN-2TNH03P-FLK<br>• E5ZN-2TPH03P-FLK<br>• E5ZN-2CNF03P-FLK<br>• E5ZN-2CPF03P-FLK |
| Power supply | Power supplied from Terminal Unit terminal block (terminals 19 and 20) (Communications power supply between DeviceNet Communications Unit and Temperature Controller, and internal circuit power supply of Temperature Controller) | |
| Copying | The parameters of the connected Temperature Controllers can be uploaded or downloaded as a batch, merely by manipulating the DIP switch on the front panel of the DeviceNet Communications Unit.<br>The uploaded parameters are stored in the DeviceNet Communications Unit. | |

## 1-2-3 General Specifications

| Item | | Specifications |
|---|---|---|
| Supply voltage | DeviceNet power supply | 24 VDC (internal circuit) |
| | External input power supply | 24 VDC (for RS-485 communications circuit/ Temperature Controllers) |
| Allowable voltage range | DeviceNet power supply | 11 to 25 VDC |
| | External input power supply | 20.4 to 26.4 VDC |
| Current consumption | DeviceNet power supply | 45 mA max. (24 VDC: Current consumption of DeviceNet Communications Unit) |
| | External input power supply | 20 mA max. (24 VDC) (See note.) |
| Vibration resistance | | 10 to 55 Hz, 10m/s$^2$ for 2 hours each in X, Y, and Z directions |
| Shock resistance | | 150m/s$^2$ max. 3 times each in 3 axes, 6 directions |
| Dielectric strength | | 500 VAC 50 or 60 Hz 1min between DIN Track and entire terminal block (DeviceNet connector) or between DIN Track and all terminals (terminal sockets) |
| Insulation resistance | | 20 MΩ min. (at 100 VDC) |
| Ambient temperature | | –10 to 55°C (with no condensation or icing) |
| Ambient humidity | | 25% to 85% |
| Storage temperature | | –25 to 65°C (with no condensation or icing) |
| Enclosure rating | | IP00 |
| Dimensions | | 30 × 130 × 89.6 mm (W × D × H)<br>(When connected to an E5ZN-SCT24S Terminal Unit.) |
| Memory protection | | EEPROM, 100,000 write operations (backup data) |
| Weight | | 100 g max. (not including Terminal Unit) |
| Electromagnetic environment | | Industrial electromagnetic environment (EN/IEC 61326-1 Table 2) |

**Note** Current supplied to the Temperature Controllers is not included.

# 1-3 Connecting Temperature Controllers

## 1-3-1 Temperature Controller ID and Number of Connectable Units

The Temperature Controllers are connected alongside the DeviceNet Communications Unit and the block is linked through the Terminal Units connected to the back of the Temperature Controllers, as shown in the following diagram.

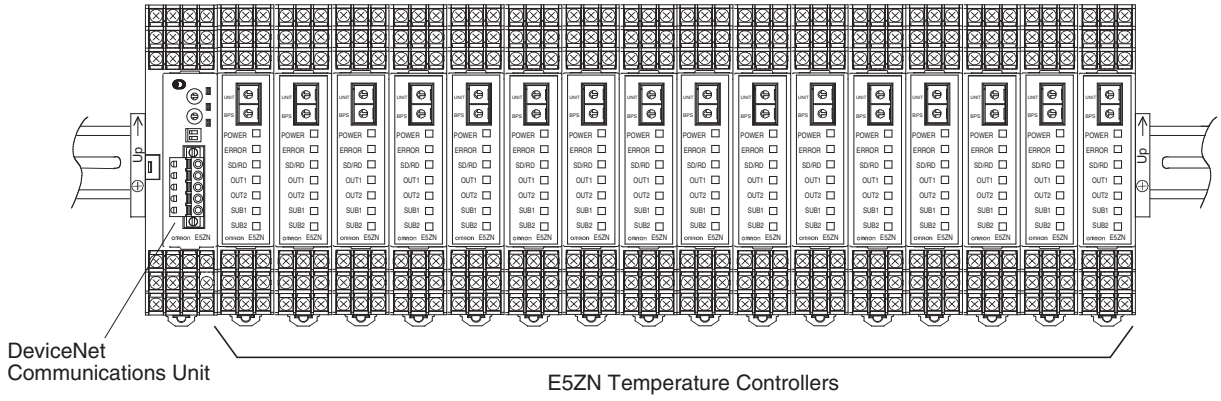

The DeviceNet Communications Unit differentiates each of the connected Temperature Controllers according to unit numbers (0 to F). The Temperature Controllers can be connected in any order. The unit number of each Temperature Controller is set using the upper rotary switch on the front panel of the Temperature Controller. Always set a unique unit number for each Temperature Controller.

Up to 16 Temperature Controllers can be connected to a single DeviceNet Communications Unit. RS-485 connections also support up to 16 Temperature Controllers.

The E5ZN-SDL Setting Display Unit for E5ZN Temperature Controllers can be connected at the same time.

**Note** There is no priority between operation commands and settings for DeviceNet communications from the master or Configurator, and operation commands and settings from the Setting Display Unit. Do not change the same data or send different operation commands more than one source at the same time.

## 1-3-2 Temperature Controller Communications

The DeviceNet Communications Unit and Temperature Controllers communicate at a baud rate of 38,400 bps. Set the baud rate using the lower rotary switch on the front panel of the Temperature Controllers to 3 (= 38,400 bps).

Communications are performed using a transmission format of 7-bit data, 2 stop bits, and 2 parity bits. These are the default settings. If the default values have been changed, use the E5ZN-SDL Setting Display Unit to return the Temperature Controller settings to 7-bit data, 2 stop bits, 2 parity bits.

## 1-3-3 Temperature Controller Models

The DeviceNet Communications Unit can be connected to the following Temperature Controllers.

| Model | Control output | Input type | Auxiliary output | HB |
|---|---|---|---|---|
| E5ZN-2QNH03TC-FLK | Voltage output (pulse output) | Thermocouple | Sinking (NPN) | Yes |
| E5ZN-2QNH03P-FLK | | Platinum-resistance thermometer | | |
| E5ZN-2QPH03TC-FLK | | Thermocouple | Sourcing (PNP) | |
| E5ZN-2QPH03P-FLK | | Platinum-resistance thermometer | | |
| E5ZN-2TNH03TC-FLK | Transistor output (pulse output) | Thermocouple | Sinking (NPN) | |
| E5ZN-2TNH03P-FLK | | Platinum-resistance thermometer | | |
| E5ZN-2TPH03TC-FLK | | Thermocouple | Sourcing (PNP) | |
| E5ZN-2TPH03P-FLK | | Platinum-resistance thermometer | | |
| E5ZN-2CNF03TC-FLK | Analog output (current output) | Thermocouple | Sinking (NPN) | None |
| E5ZN-2CNF03P-FLK | | Platinum-resistance thermometer | | |
| E5ZN-2CPF03TC-FLK | | Thermocouple | Sourcing (PNP) | |
| E5ZN-2CPF03P-FLK | | Platinum-resistance thermometer | | |

## 1-3-4 Temperature Controller Power Supply

Power is supplied to the Temperature Controllers through terminals 19 and 20 of the E5ZN-SCT24S Terminal Units.

### 1-3-5 Temperature Controller Registration

The unit numbers of the connected Temperature Controllers must be registered in the configuration in the DeviceNet Communications Unit. The DeviceNet Communications Unit automatically verifies that the registered unit numbers match the numbers of the Controllers currently able to communicate. If the unit numbers do not match in the verification process, the Temperature Controllers will be determined to have an error, causing the following status.

- The TS indicator will flash red.
- The Communicating Flag will turn OFF and the Communications Error Flag will turn ON for each Temperature Controller that is not communicating but is registered as being connected to the DeviceNet Communications Unit.

The following two methods can be used to register the connection configuration of the Temperature Controller.

***1,2,3...***

1. Registering with the Configurator or explicit messages (Turn OFF pin 1 on the DIP switch on the rear of the DeviceNet Communications Unit to enable this method)
2. Registering with the rotary switches on the rear of the DeviceNet Communications Unit (Turn ON pin 1 on the DIP switch on rear of the DeviceNet Communications Unit to enable this method.)

## 1-4 Initial Temperature Controller Settings

The following four methods are provided for setting the E5ZN Temperature Controllers.

**Transferring Temperature Controller Parameters Together**

Set each of the Temperature Controller parameters in the Edit Device Parameters Window from the DeviceNet Configurator, and then transfer them together via the DeviceNet network.

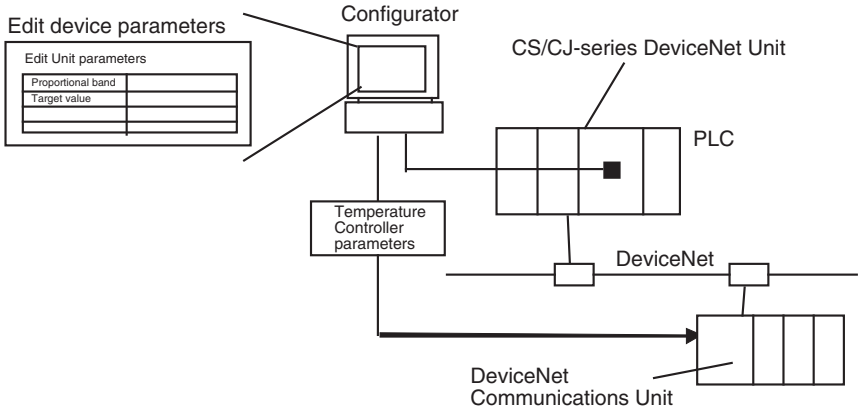


**Setting with E5ZN-SDL Setting Display Unit**

Set the parameters from the E5ZN-SDL Setting Display Unit.

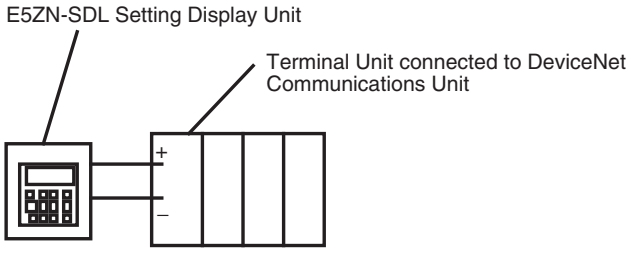

## Setting with Remote I/O Communications

Set the parameters from the PLC with the master using remote I/O communications.

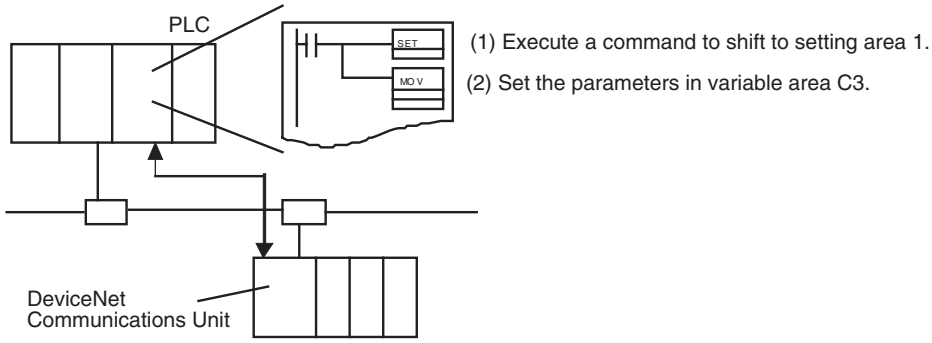


## Setting with Explicit Messages

Set the initial settings from the PLC with the master by sending an explicit message.

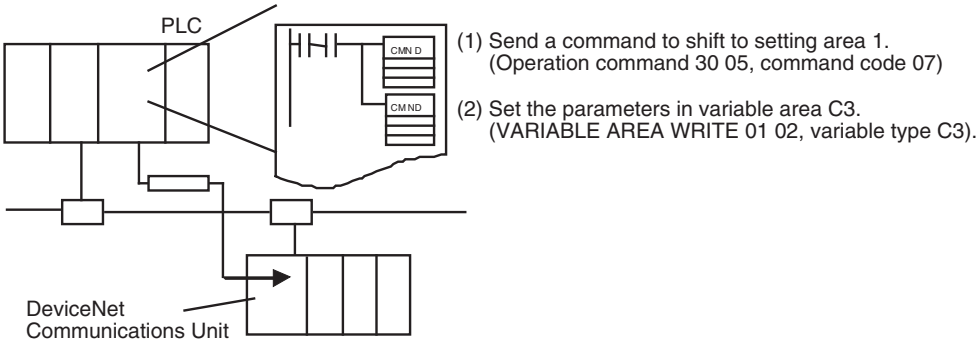

# SECTION 2
# Operating Procedures

This section outlines the basic operating procedures of the E5ZN-DRT DeviceNet Communications Unit.


2-1 Setup Procedure . . . . . 16
2-2 Startup Procedure . . . . . 17
2-2-1 Simple I/O Allocation. . . . . 17
2-2-2 I/O Allocation Using the Configurator. . . . . 18

# 2-1 Setup Procedure

Use the following procedure to prepare the DeviceNet Communications Unit for use. Refer to the reference pages provided for detailed information on each step.

| Step | Item | Details | Reference page |
|---|---|---|---|
| 1 | Connect the Terminal Units together. | Join the Terminal Units to each other by connecting their side connectors. Attach a connector cover to the right side of the last Terminal Unit. | 26 |
| 2 | Mount the Terminal Units to the DIN Track. | Mount the joined Terminal Units to the DIN Track. To secure the Terminal Units after mounting, always attach an End Plate to each end. | 27 |
| 3 | Connect the RS-485 communications cables (only if required). | When using a multiblock configuration for the Temperature Controllers connected to the DeviceNet Communications Unit, connect RS-485 communications cables to the RS-485 communications terminal (terminals 23 and 24) of the E5ZN-SCT24S Terminal Unit on the left side of each block. | 31 |
| 4 | Connect the power supply to the Terminal Unit. | Connect a 24-VDC power supply to the power supply terminal (terminals19 and 20) of the E5ZN-SCT24S Terminal Unit on the left side of each block.<br>**Note** Do not turn ON the power supply at this time. This power supply is used as the internal circuit power supply of the Temperature Controllers and the communications power supply between the DeviceNet Communications Unit and the Temperature Controllers. | 30 |
| 5 | Wire the Temperature Controllers. | Wire the Temperature Controllers, including the temperature inputs and control outputs, using the Terminal Unit terminals.<br>**Note** Do not turn ON the power supply to the peripheral devices at this time. | --- |
| 6 | Connect the Temperature Controllers to the Terminal Units. | Align each Temperature Controller with the guide on the corresponding Terminal Unit and push in until it clicks into place. | 29 |
| 7 | Set the unit numbers of the Temperature Controllers. | Set the unit numbers of all the Temperature Controllers using the upper rotary switch on the Temperature Controller. Assign a unique unit number for each of the Temperature Controllers connected to a single DeviceNet Communications Unit. | --- |
| 8 | Set the baud rate of the Temperature Controllers to 38,400 bps | Set the baud rate of all the Temperature Controllers by setting the lower rotary switch on the Temperature Controller to 3 (38,400 bps). | 12 |
| 9 | Set the DeviceNet node address. | Set the DeviceNet node address (0 to 63) for the DeviceNet Communications Unit. Set the ten's digit using the upper rotary switch on the front panel, and the one's digit using the lower rotary switch on the front panel. Set a unique node address for each slave connected to the same master. | 24 |

# 2-2 Startup Procedure

## 2-2-1 Simple I/O Allocation

Turn ON pin 1 of the DIP switch on the rear panel of the DeviceNet Communications Unit. Do not use the Configurator to allocate Temperature Controller data in the IN and OUT Areas used by the DeviceNet Communications Unit. (The Configurator is used for user-set allocations in the master.)

Use this method in the following situations.

- To allocate words in the master only for basic data, such as the set points (SPs), process values (PVs), and alarm outputs for each Temperature Controller.
- To use the DeviceNet Communications Unit without a Configurator (when allocating only fixed I/O in the master).

| Step | Item | Details | Reference page |
|---|---|---|---|
| 10 | Set the I/O allocation method. | Set simple I/O allocation as the method for allocating I/O data in the IN and OUT Areas used by the DeviceNet Communications Unit. Turn ON pin 1 of the DIP switch on the rear panel of the Unit. | 25 |
| 11 | Set the highest unit number of the connected Temperature Controllers. | Set the highest unit number of the Temperature Controllers connected to the DeviceNet Communications Unit using the rotary switch on the rear panel of the Unit. This setting will determine the size of the IN and OUT Areas. | 25 |
| 12 | Connect the DeviceNet Communications Unit to the leftmost Terminal Unit. | Align the DeviceNet Communications Unit with the guide on the E5ZN-SCT24S Terminal Unit on the left of the block and press in until it clicks into place. | 29 |
| 13 | Connect the DeviceNet communications connectors. | Connect the DeviceNet communications connector to the DeviceNet Communications Unit.<br>**Note** Do not turn ON the communications power supply at this time.<br>This power supply is also used as the internal circuit power supply of the DeviceNet Communications Unit. | 34 |
| 14 | Turn ON the power to the Terminal Units. | Turn ON the power connected to the E5ZN-SCT24S Terminal Units.<br>**Note** The Temperature Controllers will start. | 30 |
| 15 | Turn ON the DeviceNet communications power (V+, V–). | Turn ON the communications power supply to the DeviceNet Communications Unit. (See note.)<br>**Note** The DeviceNet Communications Unit will start. | --- |
| 16 | Check the indicators on the DeviceNet Communications Unit. | Check that the status of each indicator on the DeviceNet Communications Unit is as follows:<br>MS: Operating normally when lit green.<br>NS: Operating normally when lit green. (DeviceNet online or communications connected)<br>TS: Communicating with Temperature Controllers when lit green. | 23 |
| 17 | Operate from the Configurator. (Only when the Configurator is used to allocate user-set I/O.) | With the Configurator online, open the master's Edit Device Parameters Window and allocate the IN and OUT Areas used by DeviceNet in the master. Click the Master I/O Allocations Tab, specify the first word of the addresses for IN Area 1, IN Area 2, and OUT Area 1, and download the parameters to the master.<br>**Note** When fixed allocations are used, I/O is allocated automatically. | 61 |

| Step | Item | Details | Reference page |
|---|---|---|---|
| 18 | Start remote I/O communications. | Enable the master's scan list and change the PLC to RUN Mode.<br>Remote I/O communications will start, and the contents of the IN and OUT Areas in the master and DeviceNet Communications Unit will be synchronized. | --- |
| | Using explicit message communications | Send explicit messages from the master.<br>Explicit messages can be used to perform control and monitoring that cannot be achieved using the IN and OUT Areas alone, by sending explicit messages to the DeviceNet Communications Unit. | 90 |
| 19 | Set the initial settings or monitor the Temperature Controller. | With the Configurator online, perform Temperature Controller initial settings or monitoring from the Edit Device Parameters Window for the DeviceNet Communications Unit. | 78 |
| 20 | Upload the parameters of the Temperature Controller to the DeviceNet Communications Unit. | When the system has started normally, upload (backup) all the parameters to the DeviceNet Communications Unit in case of Temperature Controller malfunction. Creating a backup copy of the parameters will allow parameters to be easily reset onsite after a Temperature Controller has been replaced, without requiring a Configurator.<br>Procedure: Turn OFF pin 2 of the DIP switch on the front panel of the DeviceNet Communications Unit, turn ON pin 1 (1 to 5 s), and then turn it OFF again. | 24 and 125 |

**Note** When changing the baud rate of the master after starting the DeviceNet Communications Unit, turn ON the communications power supply of the DeviceNet Communications Unit again, and restart the Unit.
When setting the Configurator only, without a master, the baud rate of the Configurator will be automatically detected.

## 2-2-2 I/O Allocation Using the Configurator

Turn OFF pin 1 of the DIP switch on the rear of the DeviceNet Communications Unit.

Use the Configurator to allocate words for Temperature Controller data in the IN and OUT Areas used by the DeviceNet Communications Unit.

Use this method for any of the following situations.

- To select any parameters (such as PID constants) or status information, apart from the Temperature Controller set points (SPs), process values (PVs), or alarm outputs, and allocate words for them in the master (up to 100 words each in the IN Area and OUT Area).
- To allocate data in any order (up to 100 words each in the IN Area and OUT Area).
- To use remote I/O communications to allocate only data that is always required in the master and not allocate unnecessary data.

**Note** Up to 100 words each can be allocated in the IN Area and OUT Area for remote I/O communications. To read and write larger amounts of data, use explicit messages, or use two or more DeviceNet Communications Units to reduce the number of Temperature Controllers connected to each DeviceNet Communications Unit.

Use explicit message communications also for reading and writing data only when required.

| Step | Item | Details | Reference page |
|---|---|---|---|
| 10 | Set the method for allocating I/O. | Set to the Configurator as the method for allocating I/O data in the IN and OUT Areas used by the DeviceNet Communications Unit. Turn OFF pin 1 of the DIP switch on the rear panel of the Unit. | 25 |
| 11 | Connect the DeviceNet Communications Unit to the leftmost Terminal Unit. | Align the DeviceNet Communications Unit to the guide on the E5ZN-SCT24S Terminal Unit on the left end of the block and press it in until it clicks into place. | 29 |
| 12 | Connect the DeviceNet communications connector. | Connect the DeviceNet communications connector to the DeviceNet Communications Unit.<br>**Note** Do not turn ON the communications power at this time.<br>This power supply is also used as the internal circuit power supply of the DeviceNet Communications Unit. | 34 |
| 13 | Turn ON the power to the Terminal Units. | Turn ON the power supply connected to the E5ZN-SCT24S Terminal Units.<br>**Note** The Temperature Controller will start. | 30 |
| 14 | Turn ON the DeviceNet communications power supply (+V, –V) | Turn ON the communications power supply to the DeviceNet Communications Unit. (See note.)<br>**Note** The DeviceNet Communications Unit will start. | --- |
| 15 | Check the indicators on the DeviceNet Communications Unit. | Check that the status of each indicator on the DeviceNet Communications Unit is as follows:<br>MS: Operating normally when lit green. (When the power is turned ON for the first time when allocating I/O from the Configurator, the connection configuration of the Temperature Controllers will not be registered, so the indicator will flash green.)<br>NS: Operating normally when lit green. (DeviceNet online or communications connected)<br>TS: Communicating with Temperature Controllers when lit green. | 23 |

| Step | Item | Details | Reference page |
|---|---|---|---|
| 16 | Operate from the Configurator. | (1) With the Configurator online, register the connection configuration of the Temperature Controllers in the Edit Device Parameters Window for the DeviceNet Communications Unit.<br>(2) Use the following method to allocate I/O in the IN and OUT Areas from the Parameters Window for the DeviceNet Communications Unit.<br>a. Select the data to be allocated from the available allocation data.<br>b. With the Configurator online, download the data to the DeviceNet Communications Unit.<br>(3) To divide the IN Area used by the DeviceNet Communications Unit into two blocks, select the DeviceNet Communications Unit in the Edit Device Parameters Window for the master, and click Advanced to set the connections.<br>Dividing the IN Area into two blocks allows, for example, RUN parameters such as set points (SP) and process values (PV) to be allocated as DM words in IN Area 1 and status information to be allocated as CIO words in IN Area 2.<br>(4) When using the Configurator to allocate user-set I/O, allocate the IN and OUT Areas used by DeviceNet in the master from the Edit Device Parameters Window for the master. Click the Master I/O Allocations Tab, specify the first word of the addresses for IN Area 1, IN Area 2, and OUT Area 1, and download the parameters to the master.<br>**Note** When fixed allocations are used, I/O is allocated automatically. | 35 |
| 17 | Start remote I/O communications. | Enable the master's scan list and change the PLC to RUN Mode.<br>Remote I/O communications will start, and the contents of the IN and OUT Areas in the master and DeviceNet Communications Unit will be synchronized. | --- |
| | When using explicit message communications | Send explicit messages from the master.<br>Explicit messages can be used to perform control and monitoring that cannot be achieved using the IN and OUT Areas alone by sending explicit messages to the DeviceNet Communications Unit. | 90 |
| 18 | Executing Temperature Controller operation commands and monitoring | With the Configurator online, execute Temperature Controller operation commands or perform monitoring from the Edit Device Parameters Window for the DeviceNet Communications Unit. | 78 |
| 19 | Upload the Temperature Controller parameters to the DeviceNet Communications Unit. | When the system has started normally, upload (backup) all the parameters to the DeviceNet Communications Unit in case of Temperature Controller malfunction. This will allow parameters to be easily reset onsite without using a Configurator after replacing a Temperature Controller.<br>Procedure: Turn OFF pin 2 of the DIP switch on the front panel of the DeviceNet Communications Unit, turn ON pin 1 (1 to 5 s), and then turn it OFF again. | 24 and 125 |

**Note** When changing the baud rate of the master after starting the DeviceNet Communications Unit, turn ON the communications power supply of the DeviceNet Communications Unit again, and restart the Unit.
When setting the Configurator only, without a master, the baud rate of the Configurator will be automatically detected.

# SECTION 3
# Parts, Installation, and Wiring

This section describes the methods used to install and wire the E5ZN-DRT DeviceNet Communications Unit and the E5ZN Temperature Controller. The settings of DeviceNet Communications Unit switches are also described.


3-1 Part Names and Functions . . . . . 22
3-1-1 Part Names . . . . . 22
3-1-2 Indicators . . . . . 23
3-1-3 Switch Settings . . . . . 24
3-2 Installation . . . . . 26
3-2-1 Connecting Terminal Units Together . . . . . 26
3-2-2 Mounting to DIN Track . . . . . 27
3-2-3 Mounting the Communications Unit and Temperature Controllers . 29
3-3 Wiring the Terminal Unit . . . . . 29
3-3-1 Terminal Arrangement and Crimp Terminals . . . . . 29
3-3-2 Wiring the Power Supply . . . . . 30
3-3-3 RS-485 Communications Wiring . . . . . 31
3-3-4 Wiring the Setting Display Unit . . . . . 32
3-4 DeviceNet Communications Cables Wiring . . . . . 32
3-4-1 Preparing DeviceNet Communications Cables . . . . . 32
3-4-2 Attaching the DeviceNet Communications Unit Connector . . . . . 34

# 3-1 Part Names and Functions

## 3-1-1 Part Names

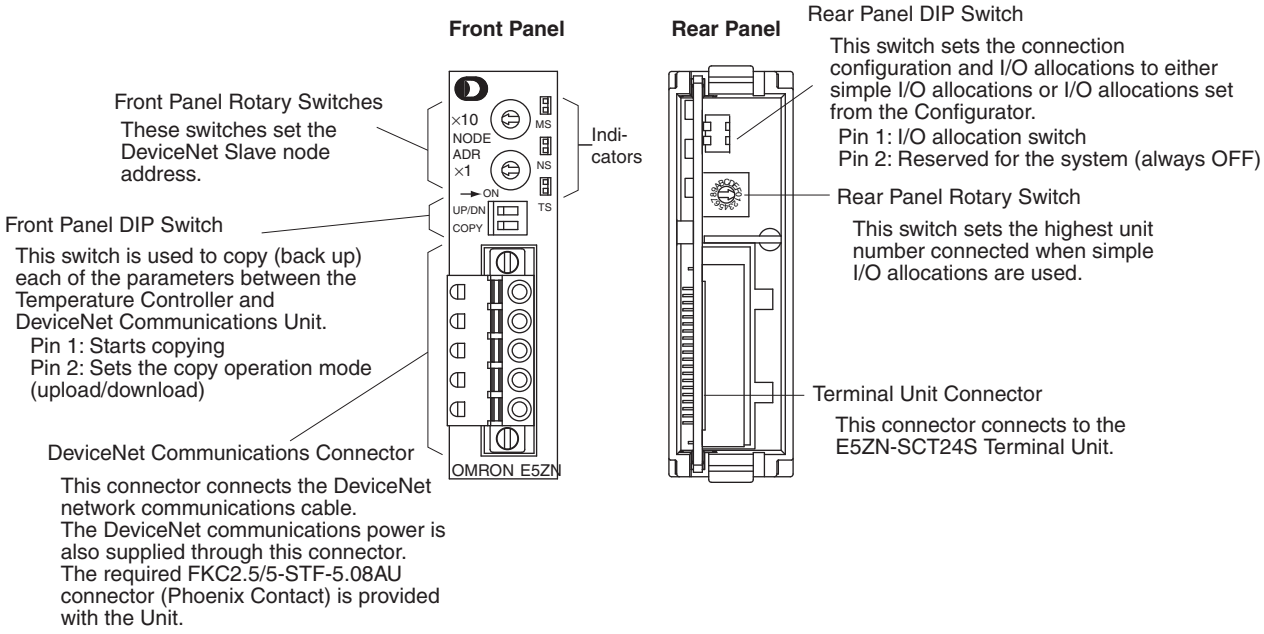


### External Dimensions

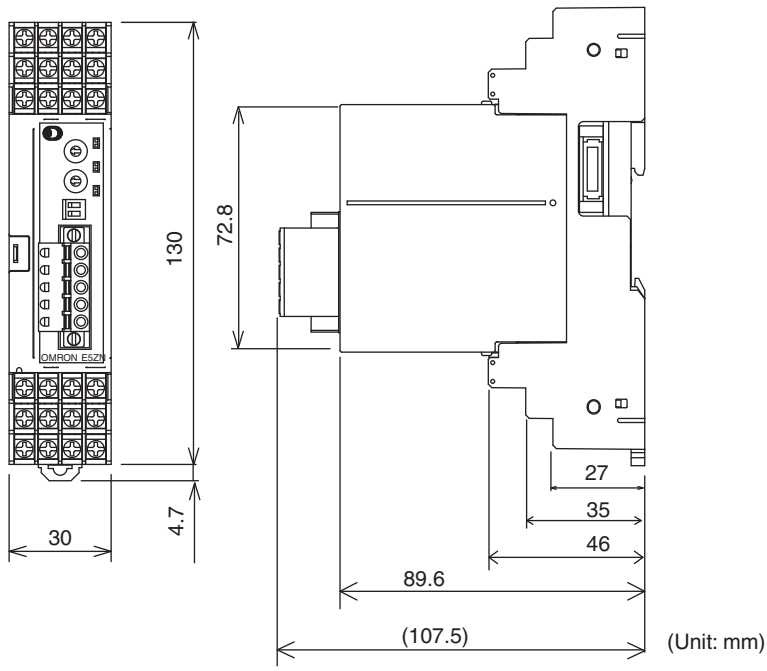


Shows dimensions when an E5ZN-SCT24S Terminal Unit is attached.

## 3-1-2 Indicators

The indicators show the status of the DeviceNet Communications Unit, the DeviceNet Network, and the status of communications with the Temperature Controllers.

| Indicator | Name | Color | Status | Meaning (main errors) |
|---|---|---|---|---|
| MS | Module status | Green | ON | The Unit condition is normal. (DeviceNet Communications Unit is normal) |
| | | | Flashing | The Unit is not set.<br>• The connection configuration has not been set. |
| | | Red | ON | Fatal error<br>• Watchdog timer error<br>• RAM error |
| | | | Flashing | Non-fatal error<br>• EEPROM sum error<br>• Setting parameter logic error<br>• EEPROM hardware error |
| | | --- | OFF | No power is being supplied.<br>• Power is not being supplied to the DeviceNet Communications Unit.<br>• The Unit is being reset.<br>• Waiting for initialization to start. |
| NS | Network status (DeviceNet) | Green | ON | Online/communications established (normal network status) |
| | | | Flashing | Online/communications established (waiting for communications to be established with master) |
| | | Red | ON | Fatal communications error (The Unit has detected an error that does not allow communications through the network.)<br>• Node address duplication error<br>• Bus Off error detected |
| | | | Flashing | Non-fatal communications error<br>• Communications timeout |
| | | --- | OFF | Offline or power supply is OFF<br>• Waiting for completion of the master's node address duplication check.<br>• Power is not being supplied to the DeviceNet Communications Unit. |
| TS | Temperature Controller communications status | Green | ON | Communicating with the Temperature Controllers |
| | | | Flashing | The copy operation is being performed. |
| | | Red | Flashing | • Communications error with a Temperature Controller (a communications error has occurred with at least one of the Temperature Controllers registered in the DeviceNet Communications Unit)<br>• The copy operation failed. (Flashes for 10 s, then returns to prior status.) |
| | | --- | OFF | • Waiting to communicate with Temperature Controllers (until communications start after the power supply is turned ON or the Unit is reset.)<br>• The Power is OFF. |

**Normal Indicator Display**

The MS, NS, and TS indicators are all lit green when the status of all Units and the Network are normal.

## 3-1-3 Switch Settings

**Note** The DeviceNet Communications Unit automatically detects and matches the baud rate of the master, so the baud rate does not require setting.

### Front Rotary Switches

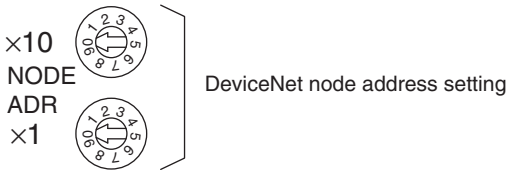


Use these switches to set the node address as a slave in the DeviceNet network between 00 and 63 (node addresses 64 to 99 cannot be used).

Set the ten's digit with the upper rotary switch, and the one's digit with the lower rotary switch.

Any node address within the specified range can be set, as long as each node in the Network (master, slaves, Configurator) has a different node address.

**Note**

1. Always turn OFF the DeviceNet communications power supply and Terminal Unit power supply before setting the Unit.
2. The factory setting is 00.
3. If two or more nodes are set with the same node address, a node address duplication will occur and the nodes will not be able to participate in communications.

### Front Panel DIP Switch

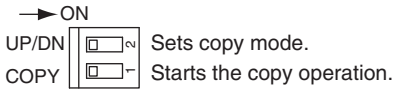


The DeviceNet Communications Unit can read and save the parameters of the connected Temperature Controllers, allowing the parameters to be copied to the Temperature Controllers when required.

Use the following procedure to operate the front panel DIP switch and perform copy operations. For details on the copy mode, refer to *Reading/Writing Temperature Controller Settings Using Copy Mode* in *8-2-3 Replacing Units*.

**Copy Start (Pin 1)**

The copy operation is performed according to the copy mode set using pin 2, by operating this pin as follows:

OFF → ON (1 s min., 5 s max.) → OFF

**Copy Mode Setting (Pin 2)**

Specify the copy mode operation according to the following table.

| Pin 2 | Copy mode operation setting |
|---|---|
| OFF | Upload (from Temperature Controller to DeviceNet Communications Unit) |
| ON | Download (from DeviceNet Communications Unit to Temperature Controller) |

**Note** Pins 1 and 2 of the DIP switch are OFF as the factory setting.

## Rear Panel DIP Switch

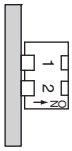


I/O allocation setting switch
Not used (leave set to OFF).

Use the rear panel DIP switch to set the Unit connection configuration and I/O allocation to either simple I/O allocation or I/O allocation from the Configurator.

| Pin 1 | I/O allocation setting switch |
|---|---|
| OFF | I/O allocation set from the Configurator |
| ON | Simple I/O allocation setting |

**Setting Simple I/O Allocation**

Use the rear panel rotary switch to set the highest unit number of the Temperature Controllers connected to the DeviceNet Communications Unit. The connection configuration will be automatically created and the I/O will be automatically allocated for this setting.

With simple I/O allocation, when the DeviceNet Communications Unit is started, it checks the communications status with the Temperature Controllers up to the Temperature Controller with the highest unit number (power must be supplied to the Terminal Unit). After checking the communications status, the Temperature Controllers that are communicating normally are registered in the connection configuration. IN and OUT Areas for Temperature Controller data can also be allocated for the total number of connected Temperature Controllers.

**Setting I/O Allocations from the Configurator**

The Configurator can be used to allocate I/O and set the connection configuration in the DeviceNet Communications Unit. The settings are recorded in the non-volatile memory of the DeviceNet Communications Unit, so by setting only once, the same settings can be used the next time they are required (the connection configuration and I/O allocations are not set as factory settings.)

For details on simple I/O allocation, and setting I/O allocations with the Configurator, refer to *SECTION 4 Remote I/O Communications*.

**Note**

1. Always turn OFF the DeviceNet communications power supply and Terminal Unit power supply before performing setting operations.
2. Pin 2 must always be OFF.
3. When pin 1 is OFF (I/O allocations set from the Configurator), if the connection configuration is not registered the MS indicator will flash green. When the connection configuration is set from the Configurator, the DeviceNet Communications Unit will automatically be reset and after starting normally, the MS indicator status will be lit green.
4. Pins 1 and 2 are both OFF as the factory setting.

## Rear Panel Rotary Switch

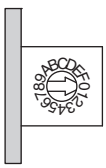


Highest unit number connected

Use this switch to set the highest unit number of the connected Temperature Controllers. This setting is enabled when pin 1 of the rear panel DIP switch in ON (simple I/O allocation) only.

**Note**
1. Always turn OFF the DeviceNet communications power supply and Terminal Unit power supply before setting the switches.
2. When using simple I/O allocation, a Temperature Controller with a unit number higher than that set with the rear panel rotary switch cannot be used.
3. The data allocated in the IN and OUT Areas is automatically set according to this setting.
4. The factory setting of the rear panel rotary switch is 1.

# 3-2 Installation

Connect the DeviceNet Communications Unit to an E5ZN-SCT24S Basic Terminal Unit and connect the Temperature Controllers to an E5ZN-SCT18S Expansion Terminal Unit.

When using RS-485 communications, however, connect a E5ZN-SCT24S Basic Terminal Unit to the leftmost Temperature Controller.

Up to 16 Temperature Controllers can be connected to a single DeviceNet Communications Unit.

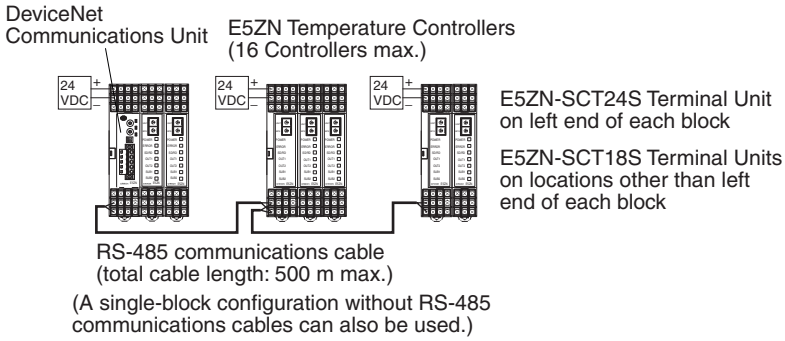


**Note** Do not connect DeviceNet Communications Units to communications cables or disconnect them from the cables while the DeviceNet Network is operating. Abnormal communications may result from short-circuited DeviceNet cables, loose contacts, or from changing the location of terminating resistance (DeviceNet) due to changes in the node configuration.

## 3-2-1 Connecting Terminal Units Together

Terminal Units can be joined together by connecting the side connector on each Terminal Unit. Connect the required number of Terminal Units together.

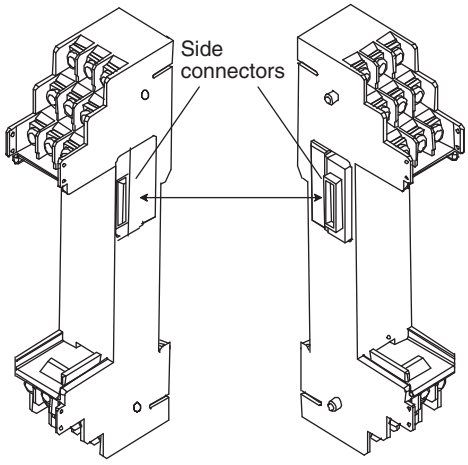

Attach a connector cover (included with the Terminal Unit) to the unused connector of the rightmost Terminal Unit. This measure will prevent dust and dirt from entering the Unit.

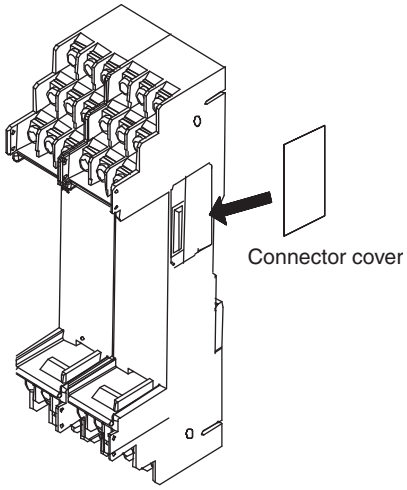


**Note** Terminal Units can be joined together by simply connecting the connectors to each other, and can be disconnected again by simply pulling them apart.

## 3-2-2 Mounting to DIN Track

**Mounting Bracket**

Mount the DeviceNet Communications Unit and Temperature Controllers to the DIN Track.

Use screws to attach the DIN Track to the control panel in at least three places.

**PFP-50N (50 cm)/PFP-100N (100 cm) DIN Track**

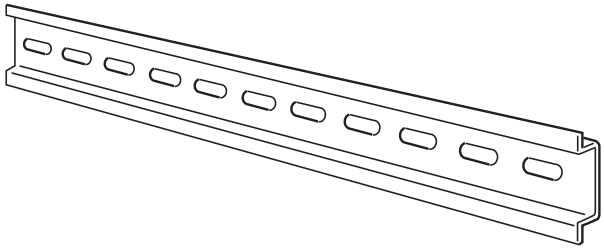

**PFP-M End Plates (×2)**

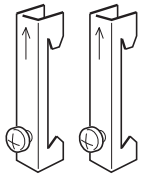

**Mounting Direction**

The mounting direction of the Temperature Controllers is fixed. Position the DIN track vertical to the ground, as shown in the following diagram.

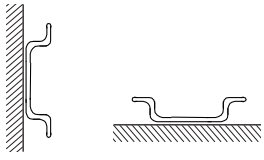

Vertical: OK Horizontal: NG

## Mounting the Unit

Pull down the DIN Track mounting hook on the bottom of the Unit (1), latch the top hook on the back of the Unit onto the track (2), push the Terminal Unit until the hook can be locked onto the track (3), and then push the DIN Track mounting hook back up to lock the Unit in place (4).

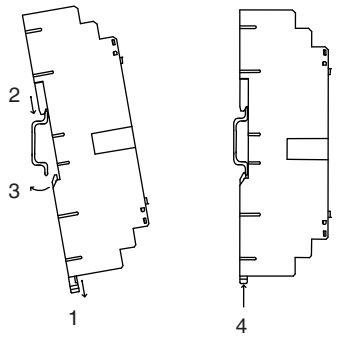


## Removing the Unit

Use a flat-blade screwdriver to pull down the DIN Track mounting hook, and then pull out the bottom of the Terminal Unit.

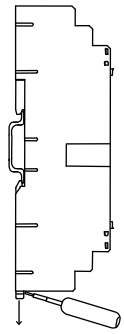

## Mounting End Plates

Always mount end plates to both ends to keep the Terminal Units connected together.

Hook the bottom of the end plate onto the DIN Track (1), hook the top, and then pull down (2). Secure the end plate screws.

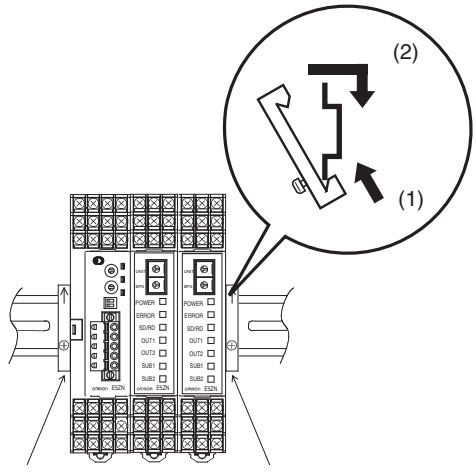


**Note** Always use two End Plates to clamp the Units together from both ends.

### 3-2-3 Mounting the Communications Unit and Temperature Controllers

**Connecting the Units**

Align the DeviceNet Communications Unit and Temperature Controllers with the guides on the Terminal Unit and push firmly into place.

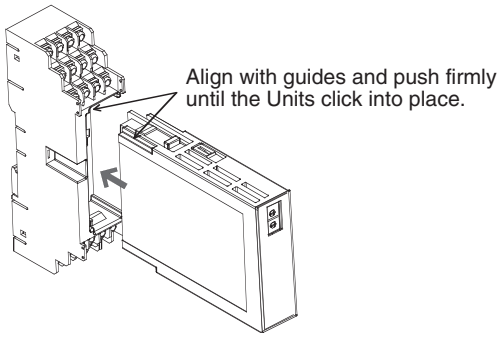


**Removing the Units**

Push the hooks on the top and bottom panels of the Unit (1), and at the same time pull out the Unit to remove it (2).

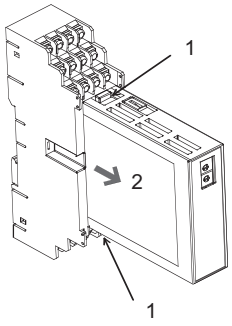


## 3-3 Wiring the Terminal Unit

The method used to wire the Terminal Unit that is connected to the DeviceNet Communications Unit is explained here.

For details on the method used to wire the Terminal Unit to which the Temperature Controllers are mounted, refer to the *E5ZN Temperature Controller Operation Manual* (H113)

### 3-3-1 Terminal Arrangement and Crimp Terminals

The E5ZN-SCT24S Terminal Unit connected to the DeviceNet Communications Unit uses terminals 19 to 24, as shown in the following diagram. (Terminals 1 to 18 are not used.)

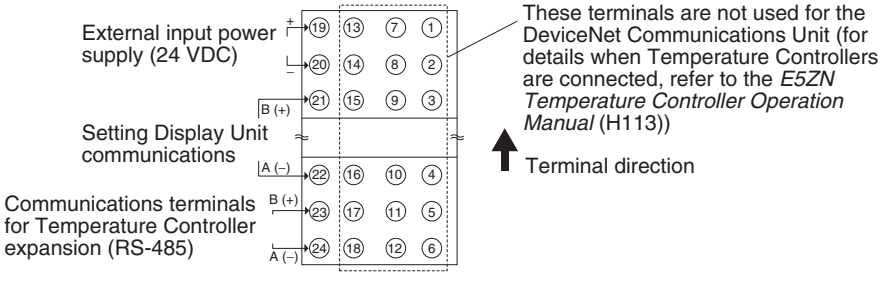


E5ZN-SCT24S (Top View)

**Note**
1. Wire the signal lines separately from power lines to prevent noise interference.
2. Use crimp terminals for wiring.

**Crimp Terminals**

Always connect M3 crimp terminals, as shown below, when wiring the Terminal Unit. Tighten to a torque of 0.40 to 0.56 N·m.

## 3-3-2 Wiring the Power Supply

Connect the power supply (20.4 to 26.4 VDC) for the Temperature Controllers to terminals 19 and 20, as shown in the following diagram.

When more than one block of Temperature Controllers is used, connect a power supply to the E5ZN-SCT24S Terminal Unit on the leftmost side of each block.

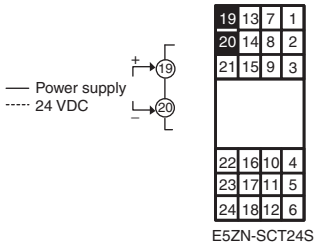


**Note** This power supply is used for communications between the DeviceNet Communications Unit and the Temperature Controllers (RS-485), and to start the Temperature Controllers.

Consider the power consumption of each Temperature Controller and the connected I/O when selecting a power supply.

When reinforced insulation is required, connect the I/O to a device without an exposed charged section or to a device with basic insulation that is suitable for the maximum usage voltage of the I/O section.

**UL/CSA Safety Standards**

Use a SELV power supply with overcurrent protection.

A SELV power supply has redundant I/O or increased insulation, an output voltage of 30 Vr.m.s and a 42.4-V peak or maximum of 60 VDC.

Recommended power supply: S82K-05024CD (OMRON) or S8VS-06024A (OMRON)

## 3-3-3 RS-485 Communications Wiring

RS-485 communications can be used to connect Temperature Controllers in remote locations to the DeviceNet Communications Unit.

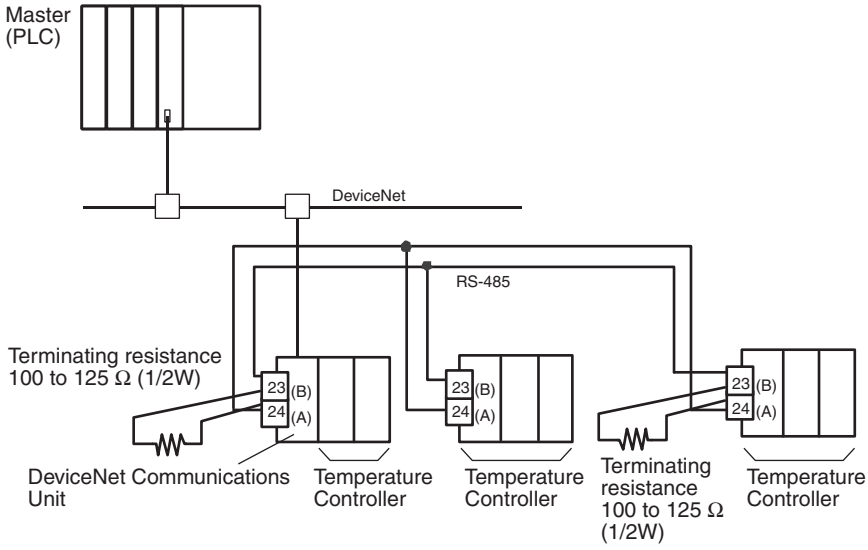


RS-485 communications cables can be extended up to 500 m.

Connect terminating resistance of 100 to 125 Ω (1/2W) between terminals 23 and 24 of the devices connected to each end of the RS-485 communications line.

Connect the RS-485 communications cables to terminals 23 and 24, as shown in the following diagram.

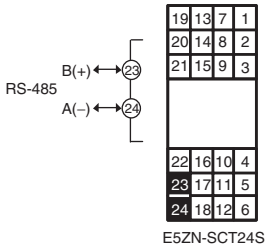


**RS-485 Communications Cables**

Use shielded twisted-pair cable (AWG 28 or larger) for the RS-485 communications cables, as shown in the following diagram.

**Cable Reference Diagram**

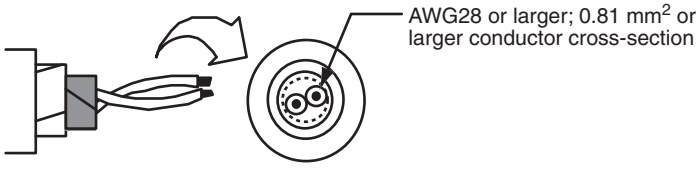

### 3-3-4 Wiring the Setting Display Unit

The E5ZN-SDL Setting Display Unit for E5ZN Temperature Controllers can be used at the same time as the DeviceNet Communications Unit.

Connect the Setting Display Unit to terminals 21 and 22, as shown in the following diagram.

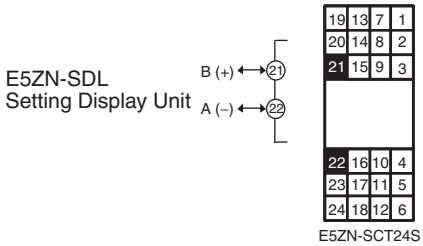


For details on connecting and operating the Setting Display Unit, refer to the *E5ZN Temperature Controller Operation Manual* (H113).

**Note** When using the Setting Display Unit to set or change Temperature Controllers individually, a malfunction may occur or the Temperature Controllers may stop operating if the setting data in the DeviceNet Communications Unit does not match the setting data in the Temperature Controllers. Check the setting items and settings carefully before setting or changing the parameters.

## 3-4 DeviceNet Communications Cables Wiring

The methods for preparing DeviceNet communications cables connected to the DeviceNet Communications Unit, and attaching communications connectors are explained here.

For details on supplying the DeviceNet communications power and grounding the DeviceNet Network, refer to the *DeviceNet Operation Manual* (W267).

### 3-4-1 Preparing DeviceNet Communications Cables

Use the following procedure to prepare and connect the communications cables to the connectors.

***1,2,3...***

1. Remove about 30 to 80 mm of the cable covering, being careful not to damage the shield mesh underneath. Do not remove too much covering or a short circuit may result.

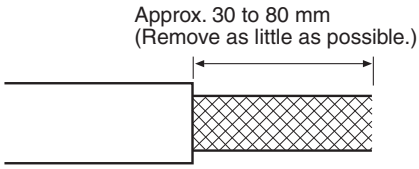


2. Carefully peel back the shield mesh to reveal the signal lines, power lines, and the shield wire. The shield wire is slightly harder to the touch than the mesh.

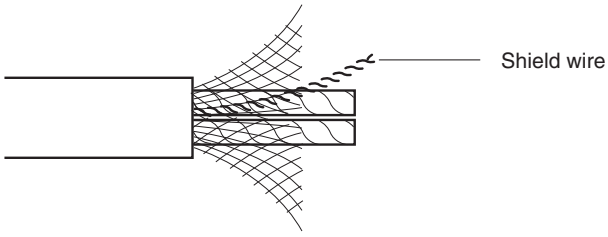

3. Remove the exposed mesh and the aluminum tape from the signal and power lines. Strip the covering from the signal and power lines to the proper length for the crimp terminals. Twist together the wires of each of the signal and power lines.

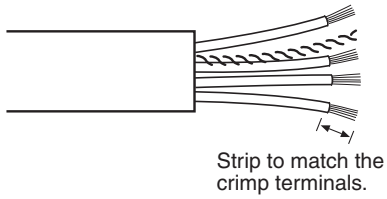


4. Attach crimp terminals to the lines and then cover any exposed areas with vinyl tape or heat-shrink tubing.
   Orient the connector properly, then insert each of the signal lines, power supply lines, and the shield wire into the connector holes from the top in the order red, white, shield, blue, black, as shown in the following diagram. The DeviceNet Communications Unit is equipped with screwless connectors, so the cables do not need to be secured with screws as with previous DeviceNet communications connectors. With the orange tab pushed down, insert each of the lines into the back of the holes.
   Release the orange tab and gently tug on each line to check that it is connected properly.

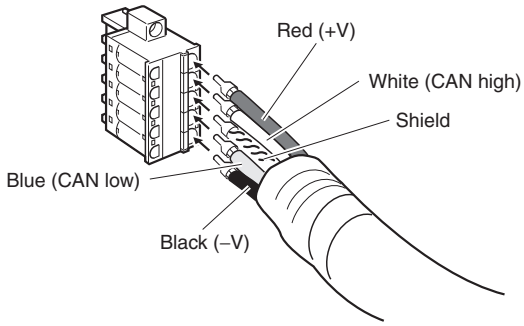


Colored stickers that match the colors of the lines to be inserted are provided on the Master Unit and slaves. Use these stickers to check that the lines are wired correctly. The colors correspond to the signal lines as follows:

| Color | Signal |
|---|---|
| Red | Power line, positive voltage (+V) |
| White | Communications line, high (CAN high) |
| --- | Shield |
| Blue | Communications line, low (CAN low) |
| Black | Communications cable, negative voltage (–V) |

- We recommend the following crimp terminals.
  Phoenix Contact AI-series Crimp Terminals: AI-0.5-8WH-B (product code 3201369)

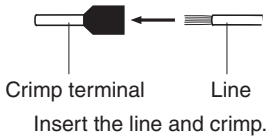


The following crimp tool is also available.
Phoenix Contact ZA3 Crimp Tool

## 3-4-2 Attaching the DeviceNet Communications Unit Connector

Align the DeviceNet Communications Unit connector with the cable connector, and insert the cable connector fully into the DeviceNet Communications Unit connector.

Tighten the set screws to a torque between 0.25 and 0.3 N·m to secure the connector.

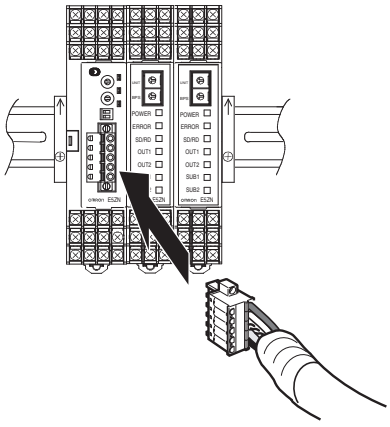


- Using the Connector Provided with the DeviceNet Communications Unit for a Multidrop Connection (Using Thin Cables)
  When using Thin Cables for a multidrop connection, two wires of the same color can be inserted into the one hole.

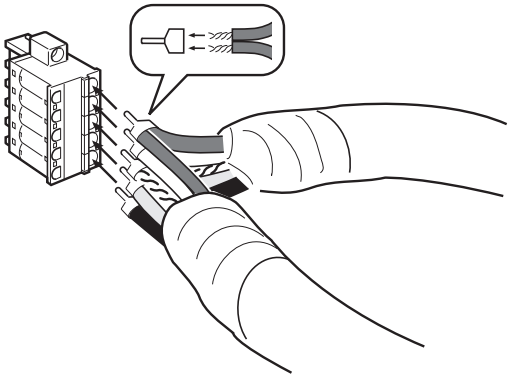

Crimp the two lines together that are to be inserted into the same hole using a special crimp terminal, as shown in the following diagram.

**Crimp Terminal for Two Lines**

We recommend the following crimp terminals and crimp tools.

| Crimp terminal | Crimp tool |
|---|---|
| Phoenix Contact | Phoenix Contact |
| Model: AI-TWIN2×0.5-8WH (product code 3200933) | Model: UD6 (product code 1204436) |

# SECTION 4
# Remote I/O Communications

This section describes the input (IN) areas and output (OUT) areas that E5ZN-DRT DeviceNet Communications Units can use for remote I/O communications. The methods to allocate data for master communications are also described.


4-1 Allocation Method Overview . . . . . 36
4-1-1 Overview. . . . . 36
4-1-2 Allocation Procedure . . . . . 39
4-2 Simple I/O Allocation . . . . . 40
4-2-1 Setting Allocation Data. . . . . 40
4-2-2 Allocation Area Configuration . . . . . 41
4-2-3 Allocating Data in the Master. . . . . 43
4-3 Allocating I/O from the Configurator . . . . . 44
4-3-1 Setting Allocation Data. . . . . 44
4-3-2 Creating Allocation Data . . . . . 44
4-3-3 Parameter List. . . . . 50
4-3-4 Input Data . . . . . 55
4-3-5 Output Data. . . . . 58
4-4 Allocating Data in the Master . . . . . 60
4-4-1 Fixed Allocations . . . . . 60
4-4-2 User-set Allocations . . . . . 61
4-5 Ladder Programming Examples . . . . . 65
4-5-1 RUN/STOP Sample Programming. . . . . 65
4-5-2 Change SP Sample Programming. . . . . 66
4-5-3 Change MV Upper Limit/Lower Limit Sample Programming . . . . 66

# 4-1 Allocation Method Overview

This section provides an overview of allocation methods for performing remote I/O communications from the master through the DeviceNet Communications Unit.

## 4-1-1 Overview

The DeviceNet Communications Unit can be used to allocate data, such as the Temperature Controller variable area, in the master's I/O memory.

The DeviceNet Communications Unit can be used to select data from the E5ZN Temperature Controllers and DeviceNet Communications Unit and specify the allocation destination.

Data is automatically exchanged between the master and DeviceNet Communications Unit, allowing Temperature Controllers to be controlled and monitored from the master without requiring special communications programming.

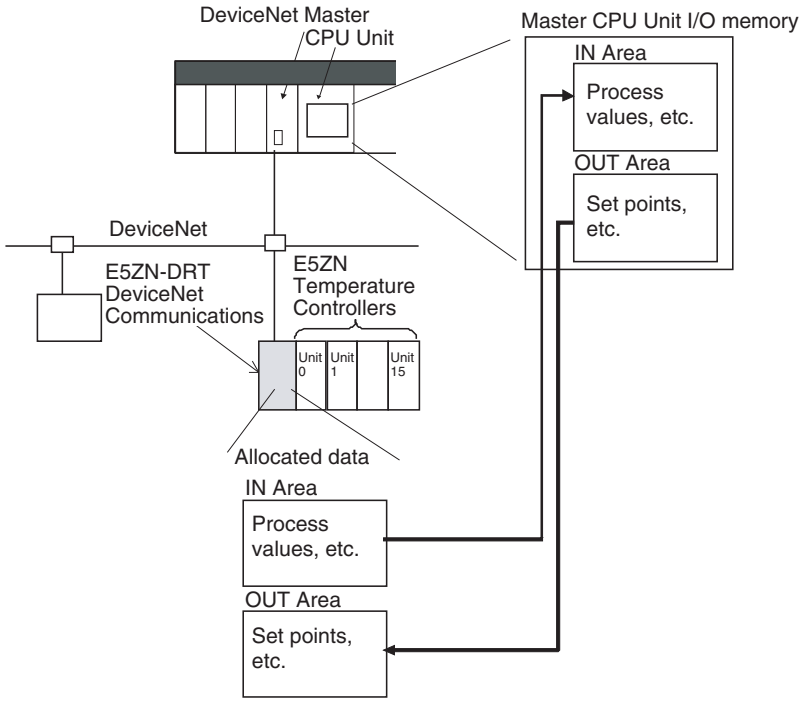


Use either of the following two methods to allocate DeviceNet Communications Unit I/O in the master.

## 1. Simple I/O Allocation

I/O can be allocated simply by setting the maximum number of Temperature Controllers connected to the DeviceNet Communications Unit using the rear panel rotary switch. Basic data only, such as Temperature Controller set points (SPs) and process values (PVs), will be allocated consistently and automatically in unit number/channel order according to the configuration of connected Temperature Controllers.

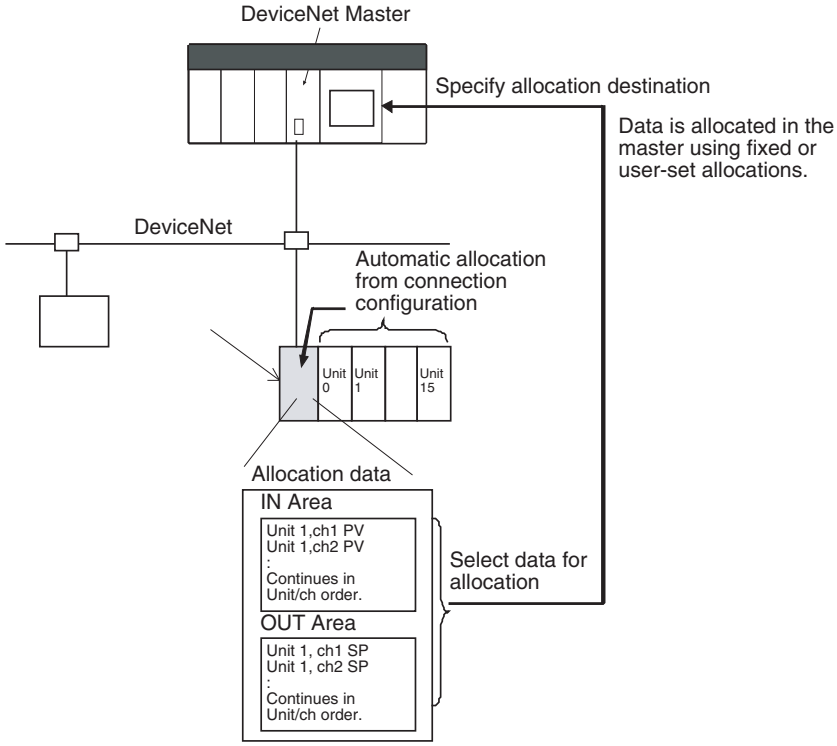


**Note:** The above allocation data is automatically allocated according to the connection configuration.

## 2. User-set Allocations from the Configurator

The Configurator can be used to edit the device parameters and select any data from the list of allocation parameters for the Temperature Controller and DeviceNet Communications Unit, and then allocate the data in a user-set destination.

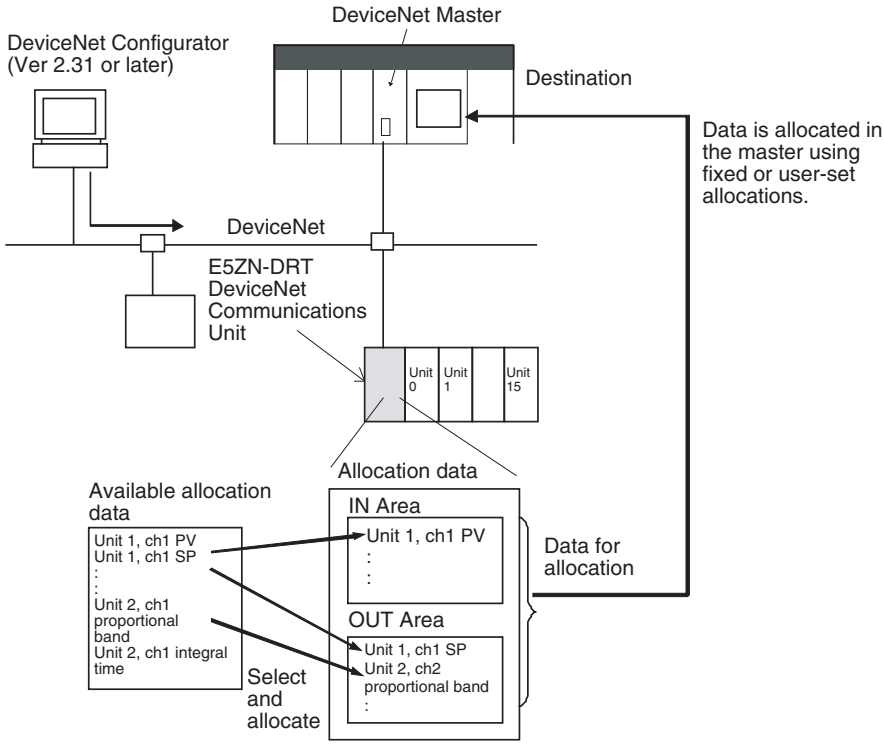


**Note:** Create the above allocation data using the Configurator's Edit Device Parameters and then download to the DeviceNet Communications Unit.

## 4-1-2 Allocation Procedure

Follow the two steps below to allocate I/O for remote communications between the master and DeviceNet Communications Unit.

### Step 1: Set the Slaves

Set in the DeviceNet Communications Unit which Temperature Controller data or DeviceNet Communications Unit data to allocate in the Master. Use either of the following two methods (1 or 2) to set the data allocation method.

| Method for setting allocation data | Rear panel DIP switch pin 1 | Contents | Applications |
|---|---|---|---|
| 1) Simple I/O allocation | ON | The predetermined set of parameters is automatically set. | Used to allocate in the master basic data only, such as the Temperature Controller SPs, PVs, and alarm outputs. |
| 2) I/O allocations from the Configurator | OFF | The Configurator is used to select any data for allocating in the master from the list of parameters. | • Used to allocate parameters and statuses in the master other than the Temperature Controller SPs, PVs, and alarm outputs.<br>• Used to allocate data in any order.<br>• Used to allocate in the master only the data that is always required for remote I/O communications, without allocating data that is not required.<br>• To divide the IN Area into two areas for allocating data (see note 1). |

**Note**

1. When the Configurator is used to allocate I/O, and the master is a CS/CJ-series DeviceNet Unit, the IN Area can be divided into two areas (IN Area 1 and IN Area 2). Any allocation data from the list of parameters can be selected and allocated in each area. (For example, operation data and status data can be separated and allocated into different locations.) To use this function, however, set two connection methods between the master and DeviceNet Communications Unit under User Setup in the Edit Device Parameters Window for the master. For details, refer to *Setting Connections when Dividing IN Area in Two* under *4-4-2 User-set Allocations*.
2. The size of allocated data is determined according to the allocation method used, as shown in the following table.

| Setting method | Number of allocated blocks | Size of allocated data |
|---|---|---|
| Simple I/O allocation | IN Area: 1 block<br>OUT Area: 1 block | IN Area: 16 to 46 words (32 to 92 bytes)<br>(= 16 + n × 2 words)<br>OUT Area: 8 to 38 words (16 to 76 bytes)<br>(= 8 + n × 2 words)<br>n: The highest unit number of the connected Temperature Controllers (0 to 15) set with the DeviceNet Unit's rear panel rotary switch. |
| I/O allocations from the Configurator | IN Area: 1 or 2 blocks<br>OUT Area: 1 block | IN Area: 0 to 100 words (0 to 200 bytes)<br>OUT Area: 0 to 100 words (0 to 200 bytes)<br>(Depends on the quantity of allocation data selected.) |

### Step 2: Allocate Data in the Master

Specify the I/O memory of the master (CPU Unit) to allocate for the data determined in step 1. Whether the setting for allocating data in the master is set to simple I/O allocation or allocation from the Configurator, either of the following two methods can be used.

- Fixed allocations
- User-set allocations

## Procedure Overview

<table>
<tr><th colspan="2">Steps</th><th colspan="2">Simple I/O allocation</th><th colspan="2">I/O allocations from the Configurator</th></tr>
<tr><td rowspan="4">Step 1</td><td rowspan="4">Set the allocation data.</td><td colspan="2" rowspan="4">Turn ON pin 1 of the rear panel DIP switch.</td><td colspan="2">Turn OFF pin 1 of the rear panel DIP switch.</td></tr>
<tr><td>IN Area: 1 block<br>OUT Area: 1 block</td><td>IN Area: 2 blocks<br>OUT Area: 1 block</td></tr>
<tr><td colspan="2">Using the Configurator, create the allocation data in the Edit Device Parameters Window for the DeviceNet Communications Unit.</td></tr>
<tr><td>---</td><td>Using the Configurator, set the connections using user definitions in the Edit Device Parameters Window for the Master Unit.</td></tr>
<tr><td>Step 2</td><td>Allocate the data in the master.</td><td>Fixed allocations</td><td>User-set allocations<br>Using the Configurator, allocate I/O from the Edit Device Parameters Window for the Master Unit under *I/O Allocations*, or *I/O Allocations through Allocated DM words*.</td><td>Fixed allocations</td><td>User-set allocations<br>Using the Configurator, allocate I/O from the Edit Device Parameters Window for the Master Unit under *I/O Allocations*, or *I/O Allocations through Allocated DM words*.</td></tr>
</table>

**Note** The sizes of slave I/O data allocated in the master is listed below. Allocate I/O correctly within the maximum allocation sizes.

DeviceNet Communications Unit allocation sizes:
IN Area: Up to 200 bytes (100 words)
OUT Area: Up to 200 bytes (100 words)

CS/CJ-series Master Unit allocation sizes:
IN Area: Up to 200 bytes (100 words)
OUT Area: Up to 200 bytes (100 words)

CVM1/CV-series, C200H, C200HX/HG/HE Master Unit allocation sizes:
IN Area: Up to 64 bytes (32 words)
OUT Area: Up to 64 bytes (32 words)

# 4-2 Simple I/O Allocation

## 4-2-1 Setting Allocation Data

Simple I/O allocation is used to allocate I/O in the master without using a Configurator, and to allocate in the master the Temperature Controller set points (SP), process values (PV), alarm output status, and other basic data only.

Set simple I/O allocation by turning ON pin 1 of the DIP switch on the rear of the DeviceNet Communications Unit.

When simple I/O allocation is used, basic data such as the predetermined PV and SP for each of the connected Temperature Controllers is allocated in unit number/channel order for the maximum number of Temperature Controllers set using the rotary switch on the rear of the DeviceNet Communications Unit's.

The allocation size is determined according to the unit number (0 to 15) set on the DeviceNet Unit's rear panel DIP switch.

- IN Area: 16 to 46 words (= 16 + n × 2 words)
- OUT Area: 8 to 38 words (= 8 + n × 2 words)

**Note**

1. Data that is not included in the allocation data can be controlled and monitored using explicit messages.
2. When simple I/O allocation is used, the type of data allocated and the allocation order cannot be changed. To add or change types of data, or to specify the allocation order, allocate I/O from the Configurator.

## 4-2-2 Allocation Area Configuration

The configuration of the IN Area and OUT Areas when simple I/O allocation is set is shown here. (The process values (PVs) and set points (SPs) have the same contents as the PV and SP settings in the Temperature Controller variable area.)

### Data Allocated in the IN Area

The following table shows the configuration of the IN Area when simple I/O allocation is used.

| Address | Item |
|---|---|
| First word + 0 words | E5ZN communications status (See note 1.) |
| First word + 1 words | E5ZN communications error status (See note 1.) |
| First word + 2 words | RUN/STOP Units 0 to 7 (See note 1.) |
| First word + 3 words | RUN/STOP Units 8 to 15 (See note 1.) |
| First word + 4 words | AT execute/cancel Units 0 to 7 (See note 1.) |
| First word + 5 words | AT execute/cancel Units 8 to 15 (See note 1.) |
| First word + 6 words | Alarm output 1 Units 0 to 7 (See note 1.) |
| First word + 7 words | Alarm output 1 Units 8 to 15 (See note 1.) |
| First word + 8 words | Alarm output 2 Units 0 to 7 (See note 1.) |
| First word + 9 words | Alarm output 2 Units 8 to 15 (See note 1.) |
| First word + 10 words | Alarm output 3 Units 0 to 7 (See note 1.) |
| First word + 11 words | Alarm output 3 Units 8 to 15 (See note 1.) |
| First word + 12 words | HB output Units 0 to 7 (See note 1.) |
| First word + 13 words | HB output Units 8 to 15 (See note 1.) |
| First word + 14 words | Unit 0, Ch1 PV (type number 100) (See note 2.) |
| First word + 15 words | Unit 0, Ch2 PV (type number 100) (See note 2.) |
| First word + 16 words | Unit 1, Ch1 PV (type number 100) (See note 2.) |
| First word + 17 words | Unit 1, Ch2 PV (type number 100) (See note 2.) |
| First word + 18 words | Unit 2, Ch1 PV (type number 100) (See note 2.) |
| First word + 19 words | Unit 2, Ch2 PV (type number 100) (See note 2.) |
| First word + 20 words | Unit 3, Ch1 PV (type number 100) (See note 2.) |
| First word + 21 words | Unit 3, Ch2 PV (type number 100) (See note 2.) |
| First word + 22 words | Unit 4, Ch1 PV (type number 100) (See note 2.) |
| First word + 23 words | Unit 4, Ch2 PV (type number 100) (See note 2.) |
| First word + 24 words | Unit 5, Ch1 PV (type number 100) (See note 2.) |
| First word + 25 words | Unit 5, Ch2 PV (type number 100) (See note 2.) |
| First word + 26 words | Unit 6, Ch1 PV (type number 100) (See note 2.) |
| First word + 27 words | Unit 6, Ch2 PV (type number 100) (See note 2.) |
| First word + 28 words | Unit 7, Ch1 PV (type number 100) (See note 2.) |
| First word + 29 words | Unit 7, Ch2 PV (type number 100) (See note 2.) |
| First word + 30 words | Unit 8, Ch1 PV (type number 100) (See note 2.) |
| First word + 31 words | Unit 8, Ch2 PV (type number 100) (See note 2.) |
| First word + 32 words | Unit 9, Ch1 PV (type number 100) (See note 2.) |
| First word + 33 words | Unit 9, Ch2 PV (type number 100) (See note 2.) |
| First word + 34 words | Unit 10, Ch1 PV (type number 100) (See note 2.) |

| Address | Item |
|---|---|
| First word + 35 words | Unit 10, Ch2 PV (type number 100) (See note 2.) |
| First word + 36 words | Unit 11, Ch1 PV (type number 100) (See note 2.) |
| First word + 37 words | Unit 11, Ch2 PV (type number 100) (See note 2.) |
| First word + 38 words | Unit 12, Ch1 PV (type number 100) (See note 2.) |
| First word + 39 words | Unit 12, Ch2 PV (type number 100) (See note 2.) |
| First word + 40 words | Unit 13, Ch1 PV (type number 100) (See note 2.) |
| First word + 41 words | Unit 13, Ch2 PV (type number 100) (See note 2.) |
| First word + 42 words | Unit 14, Ch1 PV (type number 100) (See note 2.) |
| First word + 43 words | Unit 14, Ch2 PV (type number 100) (See note 2.) |
| First word + 44 words | Unit 15, Ch1 PV (type number 100) (See note 2.) |
| First word + 45 words | Unit 15, Ch2 PV (type number 100) (See note 2.) |

**Note**

1. Individual bits will be enabled only through those for the maximum number of connected Temperature Controllers set on the rear panel rotary switch.
2. Words will be allocated only through those for the maximum number of connected Temperature Controllers.

   Example:
   If the maximum number of connected Temperature Controllers is 10, then the allocated IN Area will be the 36 words, i.e., from the first word to the first word + 35 words.

## Data Allocated in the OUT Area

The following table shows the configuration of the OUT Area when simple I/O allocation is used.

| Address | Item |
|---|---|
| First word + 0 words | Output Enable Bits Units 0 to 7 (See note 1.) |
| First word + 1 words | Output Enable Bits Units 8 to 15 (See note 1.) |
| First word + 2 words | RUN/STOP Units 0 to 7 (See note 1.) |
| First word + 3 words | RUN/STOP Units 8 to 15 (See note 1.) |
| First word + 4 words | AT execute/cancel Units 0 to 7 (See note 1.) |
| First word + 5 words | AT execute/cancel Units 8 to 15 (See note 1.) |
| First word + 6 words | Unit 0, Ch1 SP (type number 123) (See note 2.) |
| First word + 7 words | Unit 0, Ch2 SP (type number 123) (See note 2.) |
| First word + 8 words | Unit 1, Ch1 SP (type number 123) (See note 2.) |
| First word + 9 words | Unit 1, Ch2 SP (type number 123) (See note 2.) |
| First word + 10 words | Unit 2, Ch1 SP (type number 123) (See note 2.) |
| First word + 11 words | Unit 2, Ch2 SP (type number 123) (See note 2.) |
| First word + 12 words | Unit 3, Ch1 SP (type number 123) (See note 2.) |
| First word + 13 words | Unit 3, Ch2 SP (type number 123) (See note 2.) |
| First word + 14 words | Unit 4, Ch1 SP (type number 123) (See note 2.) |
| First word + 15 words | Unit 4, Ch2 SP (type number 123) (See note 2.) |
| First word + 16 words | Unit 5, Ch1 SP (type number 123) (See note 2.) |
| First word + 17 words | Unit 5, Ch2 SP (type number 123) (See note 2.) |
| First word + 18 words | Unit 6, Ch1 SP (type number 123) (See note 2.) |
| First word + 19 words | Unit 6, Ch2 SP (type number 123) (See note 2.) |
| First word + 20 words | Unit 7, Ch1 SP (type number 123) (See note 2.) |
| First word + 21 words | Unit 7, Ch2 SP (type number 123) (See note 2.) |
| First word + 22 words | Unit 8, Ch1 SP (type number 123) (See note 2.) |
| First word + 23 words | Unit 8, Ch2 SP (type number 123) (See note 2.) |
| First word + 24 words | Unit 9, Ch1 SP (type number 123) (See note 2.) |

| Address | Item |
|---|---|
| First word + 25 words | Unit 9, Ch2 SP (type number 123) (See note 2.) |
| First word + 26 words | Unit 10, Ch1 SP (type number 123) (See note 2.) |
| First word + 27 words | Unit 10, Ch2 SP (type number 123) (See note 2.) |
| First word + 28 words | Unit 11, Ch1 SP (type number 123) (See note 2.) |
| First word + 29 words | Unit 11, Ch2 SP (type number 123) (See note 2.) |
| First word + 30 words | Unit 12, Ch1 SP (type number 123) (See note 2.) |
| First word + 31 words | Unit 12, Ch2 SP (type number 123) (See note 2.) |
| First word + 32 words | Unit 13, Ch1 SP (type number 123) (See note 2.) |
| First word + 33 words | Unit 13, Ch2 SP (type number 123) (See note 2.) |
| First word + 34 words | Unit 14, Ch1 SP (type number 123) (See note 2.) |
| First word + 35 words | Unit 14, Ch2 SP (type number 123) (See note 2.) |
| First word + 36 words | Unit 15, Ch1 SP (type number 123) (See note 2.) |
| First word + 37 words | Unit 15, Ch2 SP (type number 123) (See note 2.) |

**Note**

1. Individual bits will be enabled only through the maximum number of connected Temperature Controllers set on the rear panel rotary switch.
2. Words will be allocated only through the maximum number of connected Temperature Controllers.

   Example:
   If the maximum number of connected Temperature Controllers is 10, then the allocated OUT Area will be the 28 words from, i.e., from the first word to the first word + 27 words.

## 4-2-3 Allocating Data in the Master

Data is allocated in the master in the same way as other slaves using either fixed allocations or user-set allocations.

**Note** The sizes of the IN and OUT Areas allocated to the DeviceNet Communications Unit are larger than for other slaves, so make sure that the allocated words are within the DeviceNet Area and do not overlap with words used by other slaves.

### Fixed Allocations

When fixed allocations are used, the location for allocated data is automatically determined according to the node address of the DeviceNet Communications Unit. Fixed allocations can be set without the Configurator.

With fixed allocations, however, each node address is allocated one word. Therefore, the node addresses allocated to the DeviceNet Communications Unit cannot be used by other nodes, as shown below.

- IN Area
  Allocated 16 to 46 words, therefore, uses node addresses 16 to 46.
- OUT Area
  Allocated 8 to 38 words, therefore, uses node addresses 8 to 38.

### User-set Allocations

With user-set allocations, the Configurator can be used to allocate I/O to the DeviceNet Communications Unit in any location of the CPU Unit's I/O memory area.

The configuration of the DeviceNet Communications Unit's allocation data is fixed, so the data can be used by merely allocating it in the master. For actual allocating methods, refer to *4-4 Allocating Data in the Master*.

**Note**

1. When performing user-set allocations from a DeviceNet Configurator, use Ver. 2.31 or later.

2. When using a CS/CJ-series DeviceNet Unit as the master, the location and size of the DeviceNet Area can be specified through the allocated DM Area words, without using the Configurator. For slaves, however, I/O is allocated in the DeviceNet Area in node-address order. For details, refer to the *CS/CJ-series DeviceNet Unit Operation Manual* (W380).

# 4-3 Allocating I/O from the Configurator

## 4-3-1 Setting Allocation Data

Use the Configurator to allocate data other than the process values and set points (such as PID constants), or to allocate only that data that is required.

Turn OFF pin 1 of the DIP switch on the rear of the DeviceNet Communications Unit to enable I/O to be allocated from the Configurator.

Create the allocation data by selecting any data from the list of parameters using the Configurator. Download the allocation data that has been edited using the Configurator to the DeviceNet Communications Unit.

Any allocation size can be set within the following range according to the number of allocation parameters that have been selected.

- IN Area: 0 to 100 words
- OUT Area: 0 to 100 words

**Note** If too many allocation data parameters are selected, the area available for other slaves may not be sufficient, or the Network may become overloaded. Therefore, restrict the data to those parameters that require relatively frequent reading or writing, and use explicit messages to read and write other data.

## 4-3-2 Creating Allocation Data

Allocation data is specified using the Configurator and then downloaded to the DeviceNet Communications Unit. Any data can be selected from the list of parameters, and then allocated freely in the IN Area (up to 100 words) and OUT Area (up to 100 words).

When a CS/CJ-series DeviceNet Unit is used, the IN Area can be divided into two separate blocks by using two connection methods. This function is used to allocate IN data in different areas.

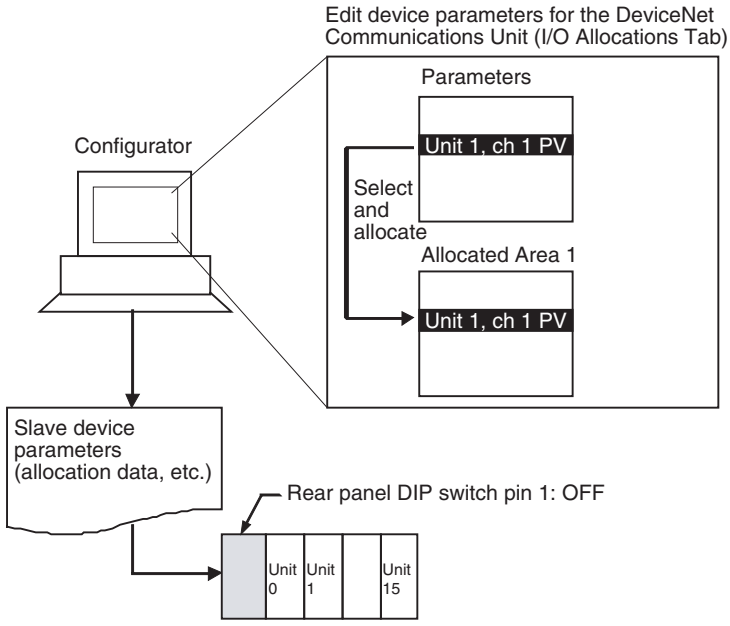


**Note** The maximum allocation size for the IN and OUT Areas (100 words) applies to the E5ZN-DRT DeviceNet Communications Unit, and does not apply to the size of allocations in the Master Unit. For details on allocation sizes in the Master Unit, refer to the operation manual for the Master Unit being used.

## Creating Data from the DeviceNet Configurator (Ver.2.31 or Later)

If problems occur in the connection with the Configurator, change the master settings. Problems will occur if the master's message timeout time is too short or the I/O size allocated in the master is different from that allocated in the DeviceNet Communications Unit. For details on setting methods, refer to *5-2-1 Preparing the Configurator Connection*.

***1,2,3...***

1. Select the DeviceNet Communications Unit in the Network Configuration Window, and double-click, or right-click and select ***Parameters*** and ***Edit*** to display the Edit Device Parameters Window.

2. Select the **General** Tab.

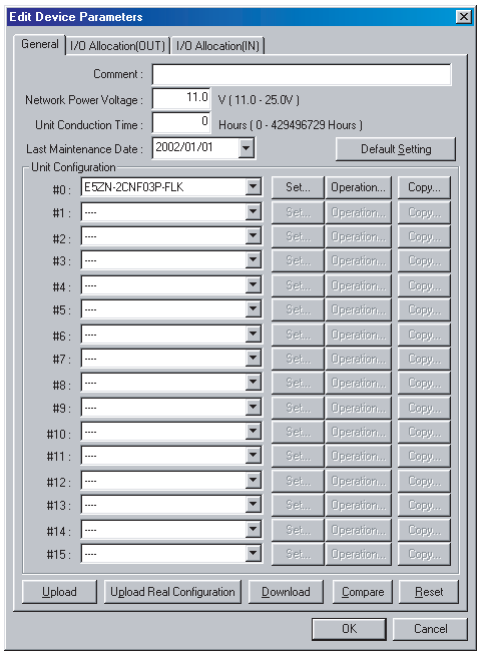


■ **Uploading the Real Configuration Online**

3. With the Configurator online, click the **Upload Real Configuration** Button. The real configuration will be uploaded, and the configuration of the Temperature Controllers that are currently connected to the DeviceNet Communications Unit and all the parameters for these Temperature Controllers will be read.

   Note a) Click the **Upload** Button to read the connection configuration recorded in the DeviceNet Communications Unit and all the parameters for the Temperature Controllers that are registered in the configuration. The window display will refresh at the same time.

   b) Click the **Download** Button to instantly write all the settings that have been set using the Configurator to the DeviceNet Communications Unit and the Temperature Controllers. The Temperature Controllers that have been written to will be reset automatically to enable the settings. (The status of the Temperature Controllers will be the same as if the power had been turned OFF and ON again.)

   c) Click the **Compare** Button to compare the parameters set from the Configurator with the parameters set in the DeviceNet Communications Unit and in all the Temperature Controllers.

■ **Editing the Connection Configuration Offline**

Edit the Temperature Controller connection configuration (Unit configuration) in the General Tab Page. Click the ▼ Button beside the unit number under *Unit Configuration*, and specify the type of Temperature Controller for the selected unit number.

Leave the field blank for unit numbers that are not allocated to Temperature Controller.

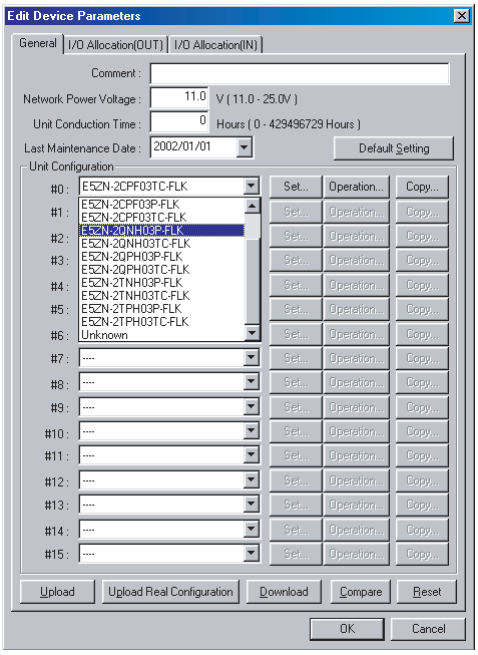


Note Click the Set Button beside the unit number to display the Edit Unit Parameters Window and then edit the parameters of the corresponding Temperature Controller (refer to page 78). Click the Operation Button to display the Operation Commands for Units Window, and control the corresponding Temperature Controller (refer to page 77).
Click the Copy Button to copy parameters between Temperature Controllers simply by specifying the copy source and destination. (refer to page 75).

4. Create Allocation Data for the OUT Area
Create the allocation data for the OUT Area in the I/O Allocations (OUT) Tab Page. Select the data to be allocated from the list in the *Parameters* field (top half of window), and drag the corresponding word to one of the Allocation Areas (bottom half of window).
Alternatively, select the parameter to be allocated and click the **Allocate** Button to display the I/O Allocations Dialog Box. Specify the allocation destination and click the **OK** Button.

Note a) The number of words from the first word is shown as +□, where the box indicates the number.

b) To delete an allocated parameter, select the parameter in the Allocation Area field, and click the **Release** Button. To delete all the allocated items, click the **Release All** Button. The Allocated Area field will become blank.

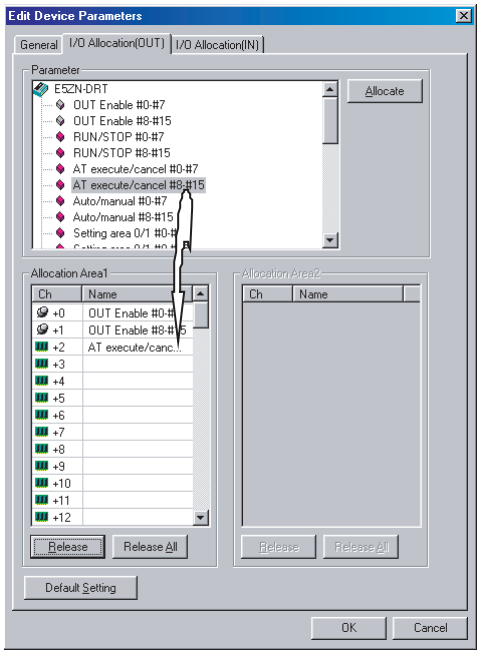


Note a) The addresses for the offset +0 and +1 are the fixed location for the Output Enable Bits. When any data is allocated to offset +2 or higher, the Output Enable Bits will be allocated automatically.

b) Do not allocate the same parameter more than once (same parameter for the same channel of the same Temperature Controller).

5. Create Allocation Data for the IN Area
   Create the allocation data for the IN Area in the IN Allocations Tab Page. Select the parameters to be allocated from the list in the *Parameters* field (top half of window), and drag to the corresponding word in the Allocation Area field (bottom half of window). Allocations can also be performed using the **Allocate** Button in the same way as for the OUT Area.

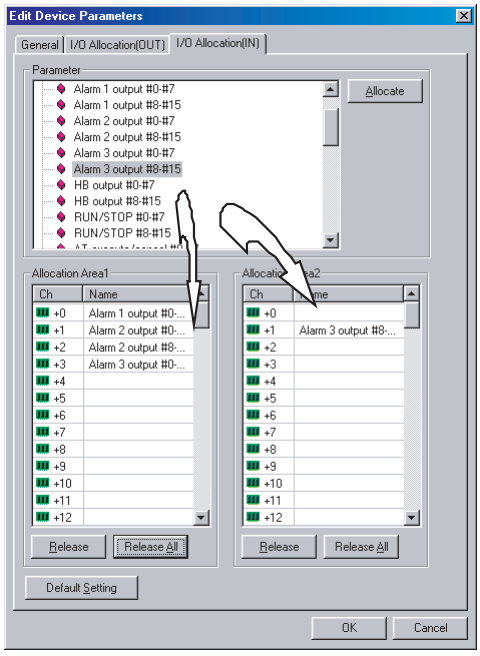


   Note a) When using a CS/CJ-series DeviceNet Unit as the master, the IN Area can be divided into two separate areas. When allocating data, drag the parameter to either the IN Area field on the left or right (Allocated Area 1, Allocated Area 2). To create these two areas, however, two connections must be defined by the user between the master and DeviceNet Communications Unit on the Edit Device Parameters Window for the master. For details, refer to *Setting Connections when Dividing IN Area in Two* under *4-4-2 User-set Allocations*.

   b) Parameters indicated by a grayed-out icon ( ) cannot be allocated. Data for some types of Temperature Controller cannot be allocated.

   c) Do not allocate the same parameter more than once (same parameter for the same channel of the same Temperature Controller).

6. Return to the **General** Tab, and click the **Download** Button. The device parameters (connection configuration, allocation data) will be registered in the DeviceNet Communications Unit.
7. Always click the **OK** Button to exit the Edit Device Parameters Window.

## 4-3-3 Parameter List

A list of the data that can be allocated is shown here. The data is divided broadly into operation commands and status bits for Temperature Controllers and Temperature Controller operation data and parameters.

**Note** Some data can be allocated in the IN Area or the OUT Area only. The type numbers are used to differentiate each item and are not used to actually specify settings.

### Operation Commands and Status Bits for the Temperature Controllers

The operation commands and status bits for the Temperature Controllers are shown in the following table. This data is a collection of the Temperature Controller flags and bits in the Communications Unit, and is not the variable area of the directly corresponding Temperature Controllers.

| Allocated in IN Area | Allocated in OUT Area | Type number | Item |
|---|---|---|---|
| No | Yes (See note 1.) | 1 | Output Enable Bits Units 0 to 7 |
| No | Yes (See note 1.) | 2 | Output Enable Bits Units 8 to 15 |
| Yes | No | 3 | E5ZN communications status |
| Yes | No | 4 | E5ZN communications error status |
| Yes | No | 5 | Alarm output 1 Units 0 to 7 |
| Yes | No | 6 | Alarm output 1 Units 8 to 15 |
| Yes | No | 7 | Alarm output 2 Units 0 to 7 |
| Yes | No | 8 | Alarm output 2 Units 8 to 15 |
| Yes | No | 9 | Alarm output 3 Units 0 to 7 |
| Yes | No | 10 | Alarm output 3 Units 8 to 15 |
| Yes | No | 11 | HB output Units 0 to 7 |
| Yes | No | 12 | HB output Units 8 to 15 |
| Yes | Yes | 13 | RUN/STOP Units 0 to 7 |
| Yes | Yes | 14 | RUN/STOP Units 8 to 15 |
| Yes | Yes | 15 | AT execute/cancel Units 0 to 7 |
| Yes | Yes | 16 | AT execute/cancel Units 8 to 15 |
| Yes | Yes | 17 | Auto/manual Units 0 to 7 |
| Yes | Yes | 18 | Auto/manual Units 8 to 15 |
| Yes | Yes | 19 | Setting area 0/1 Units 0 to 7 |
| Yes | Yes | 20 | Setting area 0/1 Units 8 to 15 |
| No | Yes | 21 | Software reset Units 0 to 7 |
| No | Yes | 22 | Software reset Units 8 to 15 |
| Yes | No | 23 | Unit status |

**Note**
1. Always allocate the Output Enable Bits in the first two words of the OUT Area.
2. Always allocate the Output Enable Bits Units 0 to 7 and Output Enable Bits Units 8 to 15 in the first two words of the OUT Area.

### Temperature Controller Operation Data and Parameters

The following table shows the data used to monitor operation, such as the Temperature Controller's process values (PVs) and set points (SPs), the operation parameters such as PID constants, and initial setting parameters such as input types. This data corresponds to the variable areas (C0, C1, and C3) of the Temperature Controllers.

Pulse output models refer to the E5ZN-2Q□H03□-FLK voltage output type, and the E5ZN-2T□H03□-FLK transistor output type at the following table. Analog output models refer to the E5ZN-2C□H03□-FLK current output types.

There is difference in a support setting of parameter by each type.

The parameter by which both of “Allocated in IN Area” column /”Allocated in OUT Area” column and “Temperature Controllers that support setting” column are indicated by “yes” is allotted to the input / output of E5ZN-DRT.

For details on how each of the data settings is used, refer to the *E5ZN Temperature Controller Operation Manual* (H113).

**Note** The data in the Temperature Controller variable area is expressed in 8-digit hexadecimal, but the allocation data is expressed in 4-digit hexadecimal. Variables other than statuses actually use the leftmost 4 digits only, so they can be used without difficulty. When the Temperature Controller manuals are used for reference, add 0000 (or FFFF for negative numbers) to the beginning of numeric values.
Statuses are handled as 8-digit hex a decimals, so the leftmost 4 digits (bits 0 to 15) of allocated data is referred to as Status A and the rightmost 4 digits (bits 16 to 31) as Status B.

**Operation Monitoring Data (Correspond to Variable Type C0)**

| Allocated in IN Area | Allocated in OUT Area | Type number | Data name | Temperature Controllers that support setting | | Temperature Controller variable area address | | | |
|---|---|---|---|---|---|---|---|---|---|
| | | | | Pulse output type | Analog output type | ch1 | | ch2 | |
| | | | | | | Variable type | Address | Variable type | Address |
| Yes | No | 100 | PV | Yes | Yes | C0 | 0000 | C0 | 0100 |
| Yes | No | 101 | Status A (rightmost 16 bits) | Yes | Yes | C0 | 0001 | C0 | 0101 |
| Yes | No | 102 | Status B (leftmost 16 bits) | Yes | Yes | C0 | 0001 | C0 | 0101 |
| Yes | No | 103 | Internal SP | Yes | Yes | C0 | 0002 | C0 | 0102 |
| Yes | No | 104 | Heater current value monitor | Yes | No | C0 | 0003 | C0 | 0103 |
| Yes | No | 105 | MV monitor for heating | Yes | Yes | C0 | 0004 | C0 | 0104 |
| Yes | No | 106 | MV monitor for cooling | Yes | Yes | C0 | 0005 | C0 | 0105 |
| Yes | No | 107 | PV hold value | Yes | Yes | C0 | 0006 | C0 | 0106 |

**Operation Parameters (Correspond to Variable Type C1)**

| Allocated in IN Area | Allocated in OUT Area | Type number | Data name | Temperature Controllers that support setting | | Temperature Controller variable area address | | | |
|---|---|---|---|---|---|---|---|---|---|
| | | | | Pulse output type | Analog output type | ch1 | | ch2 | |
| | | | | | | Variable type | Address | Variable type | Address |
| No | No | 120 | Operation/adjustment protection | Yes | Yes | C1 | 0000 | C1 | 0100 |
| No | No | 121 | Initial setting/communications protection | Yes | Yes | C1 | 0001 | C1 | 0101 |
| No | No | 122 | Setting change protection | Yes | Yes | C1 | 0002 | C1 | 0102 |
| Yes | Yes | 123 | SP | Yes | Yes | C1 | 0003 | C1 | 0103 |
| Yes | Yes | 124 | Alarm value 1 | Yes | Yes | C1 | 0004 | C1 | 0104 |
| Yes | Yes | 125 | Alarm upper limit value 1 | Yes | Yes | C1 | 0005 | C1 | 0105 |

| Allocated in IN Area | Allocated in OUT Area | Type number | Data name | Temperature Controllers that support setting | | Temperature Controller variable area address | | | |
|---|---|---|---|---|---|---|---|---|---|
| | | | | Pulse output type | Analog output type | ch1 | | ch2 | |
| | | | | | | Variable type | Address | Variable type | Address |
| Yes | Yes | 126 | Alarm lower limit value 1 | Yes | Yes | C1 | 0006 | C1 | 0106 |
| Yes | Yes | 127 | Alarm value 2 | Yes | Yes | C1 | 0007 | C1 | 0107 |
| Yes | Yes | 128 | Alarm upper limit value 2 | Yes | Yes | C1 | 0008 | C1 | 0108 |
| Yes | Yes | 129 | Alarm lower limit value 2 | Yes | Yes | C1 | 0009 | C1 | 0109 |
| Yes | Yes | 130 | Alarm value 3 | Yes | Yes | C1 | 000A | C1 | 010A |
| Yes | Yes | 131 | Manual manipulated variable | Yes | Yes | C1 | 000B | C1 | 010B |
| Yes | Yes | 132 | Heater burnout detection | Yes | No | C1 | 000C | C1 | 010C |
| Yes | Yes | 133 | SP 0 | Yes | Yes | C1 | 000D | C1 | 010D |
| Yes | Yes | 134 | SP 1 | Yes | Yes | C1 | 000E | C1 | 010E |
| Yes | Yes | 135 | Temperature input offset value | Yes | Yes | C1 | 000F | C1 | 010F |
| Yes | Yes | 136 | Upper limit temperature input offset value | Yes | Yes | C1 | 0010 | C1 | 0110 |
| Yes | Yes | 137 | Lower limit temperature input offset value | Yes | Yes | C1 | 0011 | C1 | 0111 |
| Yes | Yes | 138 | Proportional band | Yes | Yes | C1 | 0012 | C1 | 0112 |
| Yes | Yes | 139 | Integral time | Yes | Yes | C1 | 0013 | C1 | 0113 |
| Yes | Yes | 140 | Derivative time | Yes | Yes | C1 | 0014 | C1 | 0114 |
| Yes | Yes | 141 | Cooling coefficient | Yes | Yes | C1 | 0005 | C1 | 0115 |
| Yes | Yes | 142 | Dead band | Yes | Yes | C1 | 0016 | C1 | 0116 |
| Yes | Yes | 143 | Manual reset value | Yes | Yes | C1 | 0017 | C1 | 0117 |
| Yes | Yes | 144 | Heating hysteresis | Yes | Yes | C1 | 0018 | C1 | 0118 |
| Yes | Yes | 145 | Cooling hysteresis | Yes | Yes | C1 | 0019 | C1 | 0119 |

**Initial Setting Parameters (Correspond to Variable Type C3)**

| Allocated in IN Area | Allocated in OUT Area | Type number | Data name | Temperature Controllers that support setting | | Temperature Controller variable area address | | | |
|---|---|---|---|---|---|---|---|---|---|
| | | | | Pulse output type | Analog output type | ch1 | | ch2 | |
| | | | | | | Variable type | Address | Variable type | Address |
| Yes | Yes | 170 | Input type | Yes | Yes | C3 | 0000 | C3 | 0100 |
| Yes | Yes | 171 | Scaling upper limit | Yes | Yes | C3 | 0001 | C3 | 0101 |
| Yes | Yes | 172 | Scaling lower limit | Yes | Yes | C3 | 0002 | C3 | 0102 |
| Yes | Yes | 173 | Decimal point position | Yes | Yes | C3 | 0003 | C3 | 0103 |
| Yes | Yes | 174 | Temperature units | Yes | Yes | C3 | 0004 | C3 | 0104 |
| Yes | Yes | 175 | SP upper limit | Yes | Yes | C3 | 0005 | C3 | 0105 |
| Yes | Yes | 176 | SP lower limit | Yes | Yes | C3 | 0006 | C3 | 0106 |
| Yes | Yes | 177 | PID/OnOff | Yes | Yes | C3 | 0007 | C3 | 0107 |
| Yes | Yes | 178 | Heating control period | Yes | Yes | C3 | 0008 | C3 | 0108 |

| Allocated in IN Area | Allocated in OUT Area | Type number | Data name | Temperature Controllers that support setting | | Temperature Controller variable area address | | | |
|---|---|---|---|---|---|---|---|---|---|
| | | | | Pulse output type | Analog output type | ch1 | | ch2 | |
| | | | | | | Variable type | Address | Variable type | Address |
| Yes | Yes | 179 | Cooling control period | Yes | Yes | C3 | 0009 | C3 | 0109 |
| Yes | Yes | 180 | Direct/reverse operation | Yes | Yes | C3 | 000A | C3 | 010A |
| Yes | Yes | 181 | Alarm 1 type | Yes | Yes | C3 | 000B | C3 | 010B |
| Yes | Yes | 182 | Alarm 2 type | Yes | Yes | C3 | 000C | C3 | 010C |
| Yes | Yes | 183 | Alarm 3 type | Yes | Yes | C3 | 000D | C3 | 010D |
| Yes | Yes | 184 | Control output 1 allocation | Yes | Yes | C3 | 000E | C3 | 010E |
| Yes | Yes | 185 | Control output 2 allocation | Yes | Yes | C3 | 000F | C3 | 010F |
| Yes | Yes | 186 | Auxiliary output 1 allocation | Yes | Yes | C3 | 0010 | C3 | 0110 |
| Yes | Yes | 187 | Auxiliary output 2 allocation | Yes | Yes | C3 | 0011 | C3 | 0111 |
| Yes | Yes | 188 | Operation after power ON | Yes | Yes | C3 | 0012 | C3 | 0112 |
| No | No | 189 | Communications data length | Yes | Yes | C3 | 0013 | C3 | 0113 |
| No | No | 190 | Communications stop bit | Yes | Yes | C3 | 0014 | C3 | 0114 |
| No | No | 191 | Communications parity | Yes | Yes | C3 | 0005 | C3 | 0115 |
| Yes | Yes | 192 | Communications response transmission wait time | Yes | Yes | C3 | 0016 | C3 | 0116 |
| Yes | Yes | 193 | No. of multi-SP uses | Yes | Yes | C3 | 0017 | C3 | 0117 |
| Yes | Yes | 194 | Event input function | Yes | Yes | C3 | 0018 | C3 | 0118 |
| Yes | Yes | 195 | Use multi-SP | Yes | Yes | C3 | 0019 | C3 | 0119 |
| Yes | Yes | 196 | SP ramp setting | Yes | Yes | C3 | 001A | C3 | 011A |
| Yes | Yes | 197 | Standby sequence restart | Yes | Yes | C3 | 001B | C3 | 011B |
| Yes | Yes | 198 | Alarm 1 open in alarm | Yes | Yes | C3 | 001C | C3 | 011C |
| Yes | Yes | 199 | Alarm 1 hysteresis | Yes | Yes | C3 | 001D | C3 | 011D |
| Yes | Yes | 200 | Alarm 2 open in alarm | Yes | Yes | C3 | 001E | C3 | 011E |
| Yes | Yes | 201 | Alarm 2 hysteresis | Yes | Yes | C3 | 001F | C3 | 011F |
| Yes | Yes | 202 | Alarm 3 open in alarm | Yes | Yes | C3 | 0020 | C3 | 0120 |
| Yes | Yes | 203 | Alarm 3 hysteresis | Yes | Yes | C3 | 0021 | C3 | 0121 |
| Yes | Yes | 204 | Use heater burnout | Yes | No | C3 | 0022 | C3 | 0122 |
| Yes | Yes | 205 | Heater burnout latch | Yes | No | C3 | 0023 | C3 | 0123 |
| Yes | Yes | 206 | Heater burnout hysteresis | Yes | No | C3 | 0024 | C3 | 0124 |
| Yes | Yes | 207 | $\alpha$ | Yes | Yes | C3 | 0025 | C3 | 0125 |
| Yes | Yes | 208 | MV upper limit | Yes | Yes | C3 | 0026 | C3 | 0126 |
| Yes | Yes | 209 | MV lower limit | Yes | Yes | C3 | 0027 | C3 | 0127 |
| Yes | Yes | 210 | Input digital filter | Yes | Yes | C3 | 0028 | C3 | 0128 |

| Allocated in IN Area | Allocated in OUT Area | Type number | Data name | Temperature Controllers that support setting | | Temperature Controller variable area address | | | |
|---|---|---|---|---|---|---|---|---|---|
| | | | | Pulse output type | Analog output type | ch1 | | ch2 | |
| | | | | | | Variable type | Address | Variable type | Address |
| Yes | Yes | 211 | Additional PV display | Yes | Yes | C3 | 0029 | C3 | 0129 |
| Yes | Yes | 212 | Temperature input offset display add | Yes | Yes | C3 | 002A | C3 | 012A |
| Yes | Yes | 213 | Alarm 1 latch | Yes | Yes | C3 | 002B | C3 | 012B |
| Yes | Yes | 214 | Alarm 2 latch | Yes | Yes | C3 | 002C | C3 | 012C |
| Yes | Yes | 215 | Alarm 3 latch | Yes | Yes | C3 | 002D | C3 | 012D |
| Yes | Yes | 216 | Cold junction compensation method | Yes | Yes | C3 | 002E | C3 | 012E |
| Yes | Yes | 217 | Auxiliary output 3 allocation | No | Yes | C3 | 002F | C3 | 012F |
| Yes | Yes | 218 | Auxiliary output 4 allocation | No | Yes | C3 | 0030 | C3 | 0130 |
| Yes | Yes | 219 | OUT1 transfer output upper limit | No | Yes | C3 | 0031 | C3 | 0131 |
| Yes | Yes | 220 | OUT1 transfer output lower limit | No | Yes | C3 | 0032 | C3 | 0132 |
| Yes | Yes | 221 | OUT2 transfer output upper limit | No | Yes | C3 | 0033 | C3 | 0133 |
| Yes | Yes | 222 | OUT2 transfer output lower limit | No | Yes | C3 | 0034 | C3 | 0134 |
| Yes | Yes | 223 | SUB3 transfer output upper limit | No | Yes | C3 | 0035 | C3 | 0135 |
| Yes | Yes | 224 | SUB3 transfer output lower limit | No | Yes | C3 | 0036 | C3 | 0136 |
| Yes | Yes | 225 | SUB4 transfer output upper limit | No | Yes | C3 | 0037 | C3 | 0137 |
| Yes | Yes | 226 | SUB4 transfer output lower limit | No | Yes | C3 | 0038 | C3 | 0138 |
| Yes | Yes | 227 | Current output type | No | Yes | C3 | 0039 | C3 | 0139 |
| Yes | Yes | 228 | Voltage output type | No | Yes | C3 | 003A | C3 | 013A |
| Yes | Yes | 229 | Sensor error indicator | No (*) | Yes | C3 | 003B | C3 | 013B |
| Yes | Yes | 230 | Remote-local logic | No (*) | Yes | C3 | 003C | C3 | 013C |
| Yes | Yes | 231 | Input error output | No (*) | Yes | C3 | 003D | C3 | 013D |
| Yes | Yes | 232 | Input shift type | No (*) | Yes | C3 | 003E | C3 | 013E |

Note (*): It isn't possible to allot this parameter setting to input / output to the pulsed output type. Setting change in these parameters is possible by using E5ZN-SDL.
Please refer to the "E5ZN Temperature Controller Operation manual" (H113) about details of setting change.

## 4-3-4 Input Data

Input data that is specific to the DeviceNet Communications Unit (type numbers 3 to 20, and 23) and that is not allocated in the Temperature Controller variable area is described here.

For details on input data that can be set in the Temperature Controller variable area, refer to the *E5ZN Temperature Controller Operation Manual* (H113).

### Communications Status (Type Number 3)

| 15 | 14 | 13 | 12 | 11 | 10 | 9 | 8 | 7 | 6 | 5 | 4 | 3 | 2 | 1 | 0 | Bit |
|---|---|---|---|---|---|---|---|---|---|---|---|---|---|---|---|---|
| Unit 15 | Unit 14 | Unit 13 | Unit 12 | Unit 11 | Unit 10 | Unit 9 | Unit 8 | Unit 7 | Unit 6 | Unit 5 | Unit 4 | Unit 3 | Unit 2 | Unit 1 | Unit 0 | |

ON: Communicating with the Temperature Controller registered in the connection configuration.

OFF: A communications error has occurred in communications with the Temperature Controller registered in the connection configuration, or the unit number belongs to a Temperature Controller that is not registered in the connection configuration.

These bits always reflect the status of communications with the Temperature Controllers registered in the connection configuration. When a Temperature Controller with a communications error returns to normal communications, the corresponding bit will automatically turn OFF.

### Communications Error Status (Type Number 4)

| 15 | 14 | 13 | 12 | 11 | 10 | 9 | 8 | 7 | 6 | 5 | 4 | 3 | 2 | 1 | 0 | Bit |
|---|---|---|---|---|---|---|---|---|---|---|---|---|---|---|---|---|
| Unit 15 | Unit 14 | Unit 13 | Unit 12 | Unit 11 | Unit 10 | Unit 9 | Unit 8 | Unit 7 | Unit 6 | Unit 5 | Unit 4 | Unit 3 | Unit 2 | Unit 1 | Unit 0 | |

ON: A communications error has occurred in communications with a Temperature Controller registered in the connection configuration.

OFF: Communicating with the Temperature Controller registered in the connection configuration or the unit number belongs to a Temperature Controller that is not registered in the connection configuration.

These bits always reflect the status of communications with the Temperature Controllers registered in the connection configuration. When an error occurs in communications with a Temperature Controller registered in the connection configuration, the corresponding bit will turn ON and then automatically turn OFF when communications return to normal.

## Alarm Output 1,2, and 3, and HB Output (Type Numbers 5 to 12)

| | 15 | 14 | 13 | 12 | 11 | 10 | 9 | 8 | 7 | 6 | 5 | 4 | 3 | 2 | 1 | 0 | Bit |
|---|---|---|---|---|---|---|---|---|---|---|---|---|---|---|---|---|---|
| Alarm output 1 Units 0 to 7 (type number 5) | Unit 7, ch2 | Unit 7, ch1 | Unit 6, ch2 | Unit 6, ch1 | Unit 5, ch2 | Unit 5, ch1 | Unit 4, ch2 | Unit 4, ch1 | Unit 3, ch2 | Unit 3, ch1 | Unit 2, ch2 | Unit 2, ch1 | Unit 1, ch2 | Unit 1, ch1 | Unit 0, ch2 | Unit 0, ch1 | |
| Alarm output 1 Units 8 to 15 (type number 6) | Unit 15, ch2 | Unit 15, ch1 | Unit 14, ch2 | Unit 14, ch1 | Unit 13, ch2 | Unit 13, ch1 | Unit 12, ch2 | Unit 12, ch1 | Unit 11, ch2 | Unit 11, ch1 | Unit 10, ch2 | Unit 10, ch1 | Unit 9, ch2 | Unit 9, ch1 | Unit 8, ch2 | Unit 8, ch1 | |
| Alarm output 2 Units 0 to 7 (type number 7) | Unit 7, ch2 | Unit 7, ch1 | Unit 6, ch2 | Unit 6, ch1 | Unit 5, ch2 | Unit 5, ch1 | Unit 4, ch2 | Unit 4, ch1 | Unit 3, ch2 | Unit 3, ch1 | Unit 2, ch2 | Unit 2, ch1 | Unit 1, ch2 | Unit 1, ch1 | Unit 0, ch2 | Unit 0, ch1 | |
| Alarm output 2 Units 8 to 15 (type number 8) | Unit 15, ch2 | Unit 15, ch1 | Unit 14, ch2 | Unit 14, ch1 | Unit 13, ch2 | Unit 13, ch1 | Unit 12, ch2 | Unit 12, ch1 | Unit 11, ch2 | Unit 11, ch1 | Unit 10, ch2 | Unit 10, ch1 | Unit 9, ch2 | Unit 9, ch1 | Unit 8, ch2 | Unit 8, ch1 | |
| Alarm output 3 Units 0 to 7 (type number 9) | Unit 7, ch2 | Unit 7, ch1 | Unit 6, ch2 | Unit 6, ch1 | Unit 5, ch2 | Unit 5, ch1 | Unit 4, ch2 | Unit 4, ch1 | Unit 3, ch2 | Unit 3, ch1 | Unit 2, ch2 | Unit 2, ch1 | Unit 1, ch2 | Unit 1, ch1 | Unit 0, ch2 | Unit 0, ch1 | |
| Alarm output 3 Units 8 to 15 (type number 10) | Unit 15, ch2 | Unit 15, ch1 | Unit 14, ch2 | Unit 14, ch1 | Unit 13, ch2 | Unit 13, ch1 | Unit 12, ch2 | Unit 12, ch1 | Unit 11, ch2 | Unit 11, ch1 | Unit 10, ch2 | Unit 10, ch1 | Unit 9, ch2 | Unit 9, ch1 | Unit 8, ch2 | Unit 8, ch1 | |
| HB output Units 0 to 7 (type number 11) | Unit 7, ch2 | Unit 7, ch1 | Unit 6, ch2 | Unit 6, ch1 | Unit 5, ch2 | Unit 5, ch1 | Unit 4, ch2 | Unit 4, ch1 | Unit 3, ch2 | Unit 3, ch1 | Unit 2, ch2 | Unit 2, ch1 | Unit 1, ch2 | Unit 1, ch1 | Unit 0, ch2 | Unit 0, ch1 | |
| HB output Units 8 to 15 (type number 12) | Unit 15, ch2 | Unit 15, ch1 | Unit 14, ch2 | Unit 14, ch1 | Unit 13, ch2 | Unit 13, ch1 | Unit 12, ch2 | Unit 12, ch1 | Unit 11, ch2 | Unit 11, ch1 | Unit 10, ch2 | Unit 10, ch1 | Unit 9, ch2 | Unit 9, ch1 | Unit 8, ch2 | Unit 8, ch1 | |

ON: The specified output is ON and the corresponding Temperature Controller is communicating normally.

OFF: The specified output is OFF and the corresponding Temperature Controller is communicating normally, or the unit number belongs to a Temperature Controller that is not communicating normally.

## RUN/STOP (Type Number 13, 14)

| | 15 | 14 | 13 | 12 | 11 | 10 | 9 | 8 | 7 | 6 | 5 | 4 | 3 | 2 | 1 | 0 | Bit |
|---|---|---|---|---|---|---|---|---|---|---|---|---|---|---|---|---|---|
| RUN/STOP Units 0 to 7 (type number 13) | Unit 7, ch2 | Unit 7, ch1 | Unit 6, ch2 | Unit 6, ch1 | Unit 5, ch2 | Unit 5, ch1 | Unit 4, ch2 | Unit 4, ch1 | Unit 3, ch2 | Unit 3, ch1 | Unit 2, ch2 | Unit 2, ch1 | Unit 1, ch2 | Unit 1, ch1 | Unit 0, ch2 | Unit 0, ch1 | |
| RUN/STOP Units 8 to 15 (type number 14) | Unit 15, ch2 | Unit 15, ch1 | Unit 14, ch2 | Unit 14, ch1 | Unit 13, ch2 | Unit 13, ch1 | Unit 12, ch2 | Unit 12, ch1 | Unit 11, ch2 | Unit 11, ch1 | Unit 10, ch2 | Unit 10, ch1 | Unit 9, ch2 | Unit 9, ch1 | Unit 8, ch2 | Unit 8, ch1 | |

ON: The corresponding Temperature Controller is communicating normally and is in RUN (control) status.

OFF: The corresponding Temperature Controller is communicating normally and is in STOP status, or the unit number belongs to a Temperature Controller that is not communicating normally.

## AT Execute/Cancel (Type Number 15, 16)

| | 15 | 14 | 13 | 12 | 11 | 10 | 9 | 8 | 7 | 6 | 5 | 4 | 3 | 2 | 1 | 0 | Bit |
|---|---|---|---|---|---|---|---|---|---|---|---|---|---|---|---|---|---|
| AT execute/cancel Units 0 to 7 (type number 15) | Unit 7, ch2 | Unit 7, ch1 | Unit 6, ch2 | Unit 6, ch1 | Unit 5, ch2 | Unit 5, ch1 | Unit 4, ch2 | Unit 4, ch1 | Unit 3, ch2 | Unit 3, ch1 | Unit 2, ch2 | Unit 2, ch1 | Unit 1, ch2 | Unit 1, ch1 | Unit 0, ch2 | Unit 0, ch1 | |
| AT execute/cancel Units 8 to 15 (type number 16) | Unit 15, ch2 | Unit 15, ch1 | Unit 14, ch2 | Unit 14, ch1 | Unit 13, ch2 | Unit 13, ch1 | Unit 12, ch2 | Unit 12, ch1 | Unit 11, ch2 | Unit 11, ch1 | Unit 10, ch2 | Unit 10, ch1 | Unit 9, ch2 | Unit 9, ch1 | Unit 8, ch2 | Unit 8, ch1 | |

ON: AT (autotuning) is being executed for the corresponding Temperature Controller and the corresponding Temperature Controller is communicating normally.

OFF: AT (autotuning) is stopped for the corresponding Temperature Controller and the corresponding Temperature Controller is communicating normally, or the unit number belongs to a Temperature Controller that is not communicating normally.

## Auto/Manual (Type Number 17, 18)

| | 15 | 14 | 13 | 12 | 11 | 10 | 9 | 8 | 7 | 6 | 5 | 4 | 3 | 2 | 1 | 0 | Bit |
|---|---|---|---|---|---|---|---|---|---|---|---|---|---|---|---|---|---|
| Auto/manual Units 0 to 7 (type number 17) | Unit 7, ch2 | Unit 7, ch1 | Unit 6, ch2 | Unit 6, ch1 | Unit 5, ch2 | Unit 5, ch1 | Unit 4, ch2 | Unit 4, ch1 | Unit 3, ch2 | Unit 3, ch1 | Unit 2, ch2 | Unit 2, ch1 | Unit 1, ch2 | Unit 1, ch1 | Unit 0, ch2 | Unit 0, ch1 | |
| Auto/manual Units 8 to 15 (type number 18) | Unit 15, ch2 | Unit 15, ch1 | Unit 14, ch2 | Unit 14, ch1 | Unit 13, ch2 | Unit 13, ch1 | Unit 12, ch2 | Unit 12, ch1 | Unit 11, ch2 | Unit 11, ch1 | Unit 10, ch2 | Unit 10, ch1 | Unit 9, ch2 | Unit 9, ch1 | Unit 8, ch2 | Unit 8, ch1 | |

ON: The corresponding Temperature Controller is communicating normally and is being operated manually.

OFF: The corresponding Temperature Controller is communicating normally and is being operated automatically, or the unit number belongs to a Temperature Controller that is not communicating normally.

## Setting Area 0/1 (Type Number 19, 20)

| | 15 | 14 | 13 | 12 | 11 | 10 | 9 | 8 | 7 | 6 | 5 | 4 | 3 | 2 | 1 | 0 | Bit |
|---|---|---|---|---|---|---|---|---|---|---|---|---|---|---|---|---|---|
| Setting area 0/1 Units 0 to 7 (type number 19) | Unit 7, ch2 | Unit 7, ch1 | Unit 6, ch2 | Unit 6, ch1 | Unit 5, ch2 | Unit 5, ch1 | Unit 4, ch2 | Unit 4, ch1 | Unit 3, ch2 | Unit 3, ch1 | Unit 2, ch2 | Unit 2, ch1 | Unit 1, ch2 | Unit 1, ch1 | Unit 0, ch2 | Unit 0, ch1 | |
| Setting area 0/1 Units 8 to 15 (type number 20) | Unit 15, ch2 | Unit 15, ch1 | Unit 14, ch2 | Unit 14, ch1 | Unit 13, ch2 | Unit 13, ch1 | Unit 12, ch2 | Unit 12, ch1 | Unit 11, ch2 | Unit 11, ch1 | Unit 10, ch2 | Unit 10, ch1 | Unit 9, ch2 | Unit 9, ch1 | Unit 8, ch2 | Unit 8, ch1 | |

ON: The corresponding Temperature Controller is communicating normally and is in setting area 1 status.

OFF: The corresponding Temperature Controller is communicating normally and is in setting area 0 status, or the unit number belongs to a Temperature Controller that is not communicating normally.

## Unit Status (Type Number 23)

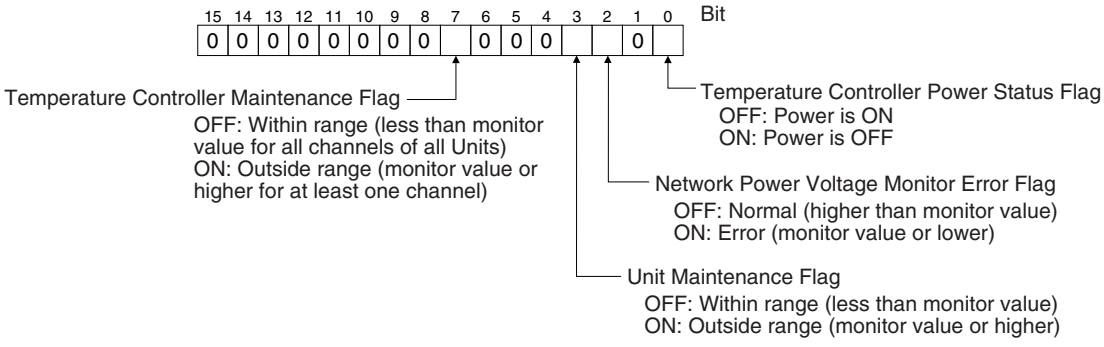


- The Temperature Controller Power Status Flag indicates the status of the power supplied to the Terminal Unit.

- The Communications Power Voltage Monitor Error Flag indicates the status of the power being supplied through the DeviceNet communications cables. For details, refer to *5-2-4 Setting Network Power Voltage Monitor*.
- The Unit Maintenance Flag turns ON when the conduction time for the DeviceNet Communications Unit exceeds the specified monitor value. For details, refer to *5-2-5 Setting the Unit Conduction Time Monitor*.
- The Temperature Controller Maintenance Flag turns ON when the Unit conduction time or total RUN time of one or more channel of the Temperature Controllers registered in the connection configuration exceeds the specified monitor value. For details, refer to *5-2-11 Setting Temperature Controller Monitor Mode and Monitor Values*.

## 4-3-5 Output Data

The output data that is specific to the DeviceNet Communications Unit (type numbers 1, 2, and 13 to 22) and that is not allocated in the Temperature Controller variable area is described here.

For details on output data that can be set in the Temperature Controller's variable area, refer to the *E5ZN Temperature Controller Operation Manual* (H113).

**Note**
1. The output data will be invalid for Temperature Controllers with which a communications error has occurred, or which have a unit number that is not registered in the connection configuration.
2. Depending on the Temperature Controller status (such as RUN/STOP), some data may be invalid even if it is written to the OUT Area. For details, refer to the *E5ZN Temperature Controller Operation Manual* (H113).

### Output Enable Bits (Type Number 1, 2)

| | 15 | 14 | 13 | 12 | 11 | 10 | 9 | 8 | 7 | 6 | 5 | 4 | 3 | 2 | 1 | 0 | Bit |
|---|---|---|---|---|---|---|---|---|---|---|---|---|---|---|---|---|---|
| Output Enable Bits Units 0 to 7 (type number 1) | Unit 7, ch2 | Unit 7, ch1 | Unit 6, ch2 | Unit 6, ch1 | Unit 5, ch2 | Unit 5, ch1 | Unit 4, ch2 | Unit 4, ch1 | Unit 3, ch2 | Unit 3, ch1 | Unit 2, ch2 | Unit 2, ch1 | Unit 1, ch2 | Unit 1, ch1 | Unit 0, ch2 | Unit 0, ch1 | |
| Output Enable Bits Units 8 to 15 (type number 2) | Unit 15, ch2 | Unit 15, ch1 | Unit 14, ch2 | Unit 14, ch1 | Unit 13, ch2 | Unit 13, ch1 | Unit 12, ch2 | Unit 12, ch1 | Unit 11, ch2 | Unit 11, ch1 | Unit 10, ch2 | Unit 10, ch1 | Unit 9, ch2 | Unit 9, ch1 | Unit 8, ch2 | Unit 8, ch1 | |

ON: Enables writing data (output data processing) to the specified channel of the specified Temperature Controller's unit number (valid as long as the bit is ON.)

OFF: Disables writing data (output data processing) to the specified channel of the specified Temperature Controller's unit number (valid as long as the bit is OFF.)

To enable the output data that is allocated in the OUT Area, the bit for the corresponding channel of the corresponding Temperature Controller's unit number must be turned ON. When these bits are OFF, output data written to the area will not be processed and will not be written to the Temperature Controller.

**Note**
1. The first two words of the OUT Area are reserved for Output Enable Bits. When the Configurator is used to allocate I/O, and data is allocated to the first word + 3 or more OUT Area words, the Output Enable Bits will be automatically allocated to the first word +1 and +2 words.
2. Always turn OFF the Output Enable Bits when downloading setting parameters to the Temperature Controllers using the Configurator. If the Output

Enable Bits are not turned OFF before downloading data, the set values allocated as I/O and the set values downloaded using the Configurator will compete with each other, causing the set values allocated as I/O to be enabled. For details on downloading set values to the Temperature Controllers using the Configurator, refer to *SECTION 5 Operations from the Configurator*.

3. Even when the Output Enable Bits for the specified channel of the specified Temperature Controller's unit number are turned OFF, data can be written using explicit messages, and set from the Setting Display Unit.
4. When the settings for ch1 and ch2 are shared, such as the input type, the data will be written to all channels for which the Output Enable Bit is ON.

## RUN/STOP (Type Number 13, 14)

| | 15 | 14 | 13 | 12 | 11 | 10 | 9 | 8 | 7 | 6 | 5 | 4 | 3 | 2 | 1 | 0 | Bit |
|---|---|---|---|---|---|---|---|---|---|---|---|---|---|---|---|---|---|
| RUN/STOP Units 0 to 7 (type number 13) | Unit 7, ch2 | Unit 7, ch1 | Unit 6, ch2 | Unit 6, ch1 | Unit 5, ch2 | Unit 5, ch1 | Unit 4, ch2 | Unit 4, ch1 | Unit 3, ch2 | Unit 3, ch1 | Unit 2, ch2 | Unit 2, ch1 | Unit 1, ch2 | Unit 1, ch1 | Unit 0, ch2 | Unit 0, ch1 | |
| RUN/STOP Units 8 to 15 (type number 14) | Unit 15, ch2 | Unit 15, ch1 | Unit 14, ch2 | Unit 14, ch1 | Unit 13, ch2 | Unit 13, ch1 | Unit 12, ch2 | Unit 12, ch1 | Unit 11, ch2 | Unit 11, ch1 | Unit 10, ch2 | Unit 10, ch1 | Unit 9, ch2 | Unit 9, ch1 | Unit 8, ch2 | Unit 8, ch1 | |

ON: RUN (start control) command (executed as long as bit is ON)

OFF: STOP (stop control) command (executed as long as bit is OFF)

## AT Execute/Cancel (Type Number 15, 16)

| | 15 | 14 | 13 | 12 | 11 | 10 | 9 | 8 | 7 | 6 | 5 | 4 | 3 | 2 | 1 | 0 | Bit |
|---|---|---|---|---|---|---|---|---|---|---|---|---|---|---|---|---|---|
| AT execute/cancel Units 0 to 7 (type number 15) | Unit 7, ch2 | Unit 7, ch1 | Unit 6, ch2 | Unit 6, ch1 | Unit 5, ch2 | Unit 5, ch1 | Unit 4, ch2 | Unit 4, ch1 | Unit 3, ch2 | Unit 3, ch1 | Unit 2, ch2 | Unit 2, ch1 | Unit 1, ch2 | Unit 1, ch1 | Unit 0, ch2 | Unit 0, ch1 | |
| AT execute/cancel Units 8 to 15 (type number 16) | Unit 15, ch2 | Unit 15, ch1 | Unit 14, ch2 | Unit 14, ch1 | Unit 13, ch2 | Unit 13, ch1 | Unit 12, ch2 | Unit 12, ch1 | Unit 11, ch2 | Unit 11, ch1 | Unit 10, ch2 | Unit 10, ch1 | Unit 9, ch2 | Unit 9, ch1 | Unit 8, ch2 | Unit 8, ch1 | |

OFF to ON: AT (autotuning) execute command (executed once when bit turns ON)

OFF: AT (autotuning) cancel command (autotuning canceled as long as bit is ON)

## Auto/Manual (Type Number 17, 18)

| | 15 | 14 | 13 | 12 | 11 | 10 | 9 | 8 | 7 | 6 | 5 | 4 | 3 | 2 | 1 | 0 | Bit |
|---|---|---|---|---|---|---|---|---|---|---|---|---|---|---|---|---|---|
| Auto/manual Units 0 to 7 (type number 17) | Unit 7, ch2 | Unit 7, ch1 | Unit 6, ch2 | Unit 6, ch1 | Unit 5, ch2 | Unit 5, ch1 | Unit 4, ch2 | Unit 4, ch1 | Unit 3, ch2 | Unit 3, ch1 | Unit 2, ch2 | Unit 2, ch1 | Unit 1, ch2 | Unit 1, ch1 | Unit 0, ch2 | Unit 0, ch1 | |
| Auto/manual Units 8 to 15 (type number 18) | Unit 15, ch2 | Unit 15, ch1 | Unit 14, ch2 | Unit 14, ch1 | Unit 13, ch2 | Unit 13, ch1 | Unit 12, ch2 | Unit 12, ch1 | Unit 11, ch2 | Unit 11, ch1 | Unit 10, ch2 | Unit 10, ch1 | Unit 9, ch2 | Unit 9, ch1 | Unit 8, ch2 | Unit 8, ch1 | |

ON: Manual mode command (executed as long as bit is ON)

OFF: Automatic mode command (executed as long as bit is OFF)

### Setting Area 0/1 (Type Number 19, 20)

| | 15 | 14 | 13 | 12 | 11 | 10 | 9 | 8 | 7 | 6 | 5 | 4 | 3 | 2 | 1 | 0 | Bit |
|---|---|---|---|---|---|---|---|---|---|---|---|---|---|---|---|---|---|
| Setting area 0/1 Units 0 to 7 (type number 19) | Unit 7, ch2 | Unit 7, ch1 | Unit 6, ch2 | Unit 6, ch1 | Unit 5, ch2 | Unit 5, ch1 | Unit 4, ch2 | Unit 4, ch1 | Unit 3, ch2 | Unit 3, ch1 | Unit 2, ch2 | Unit 2, ch1 | Unit 1, ch2 | Unit 1, ch1 | Unit 0, ch2 | Unit 0, ch1 | |
| Setting area 0/1 Units 8 to 15 (type number 20) | Unit 15, ch2 | Unit 15, ch1 | Unit 14, ch2 | Unit 14, ch1 | Unit 13, ch2 | Unit 13, ch1 | Unit 12, ch2 | Unit 12, ch1 | Unit 11, ch2 | Unit 11, ch1 | Unit 10, ch2 | Unit 10, ch1 | Unit 9, ch2 | Unit 9, ch1 | Unit 8, ch2 | Unit 8, ch1 | |

OFF to ON: Command to shift data to setting area 1 (executed once only when bit turns ON)

ON to OFF: No processing performed.

**Note** If the Setting Area Bit is ON for either ch1 or ch2, both channels are enabled.

### Software Reset (Type Number 21, 22)

| | 15 | 14 | 13 | 12 | 11 | 10 | 9 | 8 | 7 | 6 | 5 | 4 | 3 | 2 | 1 | 0 | Bit |
|---|---|---|---|---|---|---|---|---|---|---|---|---|---|---|---|---|---|
| Software reset Units 0 to 7 (type number 21) | Unit 7, ch2 | Unit 7, ch1 | Unit 6, ch2 | Unit 6, ch1 | Unit 5, ch2 | Unit 5, ch1 | Unit 4, ch2 | Unit 4, ch1 | Unit 3, ch2 | Unit 3, ch1 | Unit 2, ch2 | Unit 2, ch1 | Unit 1, ch2 | Unit 1, ch1 | Unit 0, ch2 | Unit 0, ch1 | |
| Software reset Units 8 to 15 (type number 22) | Unit 15, ch2 | Unit 15, ch1 | Unit 14, ch2 | Unit 14, ch1 | Unit 13, ch2 | Unit 13, ch1 | Unit 12, ch2 | Unit 12, ch1 | Unit 11, ch2 | Unit 11, ch1 | Unit 10, ch2 | Unit 10, ch1 | Unit 9, ch2 | Unit 9, ch1 | Unit 8, ch2 | Unit 8, ch1 | |

OFF to ON: Software reset command (executed once only when bit turns ON)

ON to OFF: No processing performed

**Note** A software reset is implemented for the Temperature Controllers, so if either ch1 or ch2 is specified, both channels will be reset.

# 4-4 Allocating Data in the Master

When the Configurator is used to allocate I/O, the created allocation data can be allocated in the master using fixed or user-set allocations.

## 4-4-1 Fixed Allocations

When fixed allocations are used, the location for allocated data is automatically determined according to the node address of the DeviceNet Communications Unit. When the Configurator is used to allocate I/O, however, the IN Area and OUT Area contents and size are undefined, so allocation data must be allocated in the same way as for user-set allocations.

For details on allocating data using the Configurator, refer to *4-4-2 User-set Allocations*.

**Note**

1. When I/O is allocated from the Configurator, up to 100 words can be allocated in the IN Area and OUT Area, but for fixed allocations, up to only 64 words can be used for both the IN Area and OUT Area (the maximum number of words may be even less depending on the DeviceNet Unit and PLC being used). Consider the number of words that can be used before allocating data.
2. When fixed allocations are used, each node address is allocated one word. The node addresses allocated in the words that are allocated to the DeviceNet Communications Unit cannot be used by other nodes.

## 4-4-2 User-set Allocations

With user-set allocations, the Configurator can be used to allocate DeviceNet Communications Unit data anywhere within the specified DeviceNet area.

**Note**

1. When performing user-set allocations from a DeviceNet Configurator, use Ver. 2.31 or later.
2. When the IN Area is divided into two blocks, the total number of words that can be used for allocating data in the IN Area is still 100 words.
3. When using a CS/CJ-series DeviceNet Unit as the master, the location and size of the DeviceNet Area can be specified through the allocated DM Area words, without using the Configurator. For slaves, however, I/O is allocated in the DeviceNet Area in node-address order. For details, refer to the *CS/CJ-series DeviceNet Unit Operation Manual* (W380).

### Allocating Data in the Master

#### Setting from the DeviceNet Configurator

***1,2,3...***

1. Double-click the icon of the Master Unit in the Network Configuration Window, or select ***Device, Parameters,*** and ***Edit*** to display the Edit Device Parameters Window for the master.
2. Click the **Register Device** Button in the master's **General** Tab Page, and register the DeviceNet Communications Unit. Alternatively, in the Network Configuration Window, drag and drop the DeviceNet Communications Unit icon in the Master Unit icon to register it. Once registered, the DeviceNet Communications Unit will be added to the *Register Device List* field. By registering the DeviceNet Communications Unit, the allocation data created in the slave's Edit Device Parameters Window will be registered in the master.

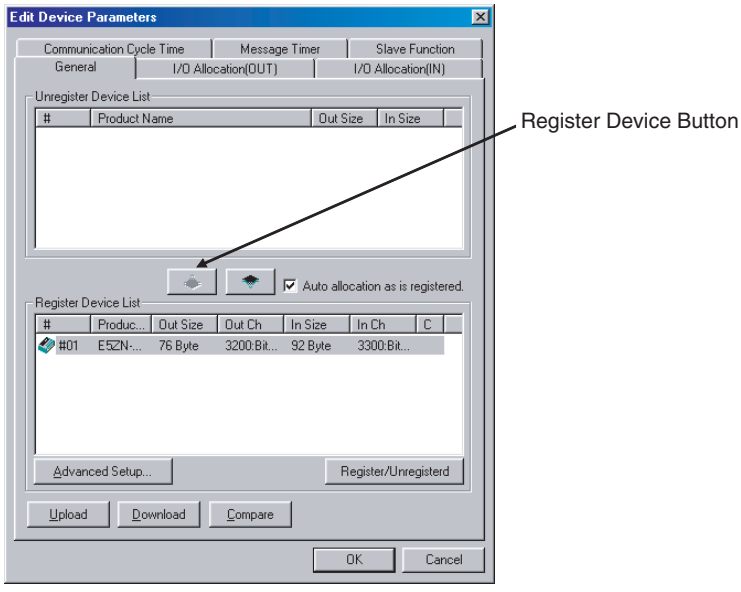


3. Select the **I/O Allocation (OUT)** and **I/O Allocation (IN)** Tab, and check that the allocation data created in the Edit Device Parameters Window for the DeviceNet Communications Unit parameters is registered in the mas-

ter's allocated area (memory block 1 or 2).

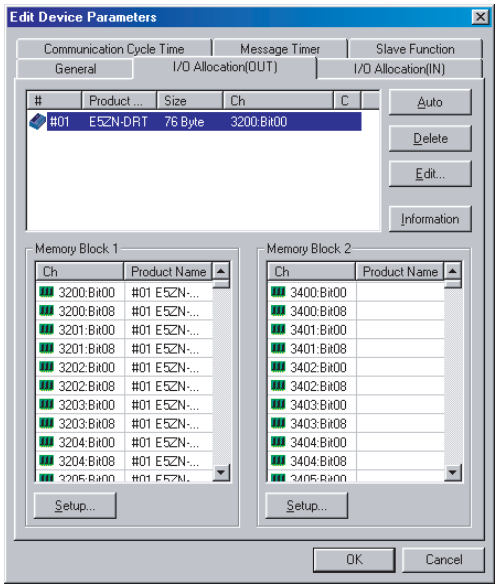


4. Click the **Edit** Button, and edit any of the I/O allocations.
   Set where to allocate the master's IN and OUT Areas in the *Allocated* field. When the master's IN and OUT Areas consist of two blocks, specify in which block to allocate the data.

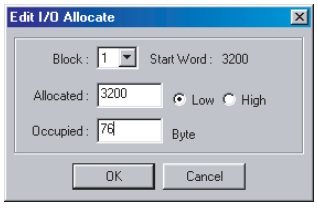


5. Click the **OK** Button, and return to the master's Edit Device Parameters Window. The DeviceNet Communications Unit data can be registered anywhere in the memory block fields in the lower half of the window.
6. Click the **OK** Button, and return to the Edit Device Parameters Window for the master. The DeviceNet Communications Unit data will be registered in the user-set location in the memory blocks in the lower half of the window.
7. Return to the **General** Tab for the master, click the **Download** Button, and write the set I/O memory allocations to the master.
8. Always click the **OK** Button to exit the master's Edit Device Parameters Window. If the **Cancel** Button or ☒ Button are pressed, the setting contents will be invalid.

## Setting Connections when Dividing IN Area in Two

When a CS/CJ-series DeviceNet Unit is used as the master, the IN Area can be divided into two areas by setting the connections. This function is enabled by setting two connection types at the same time for a single DeviceNet Communications Unit using the user-defined settings.

When a DeviceNet Communications Unit is used, one connection type can be used to exchange data from IN Area 1 and OUT Area 1, and another connection can be used to exchange data from IN Area 2.

The default connections and connection paths are shown in the following table.

| Allocated Area | Connection type used | Connection path used |
|---|---|---|
| **IN Area 1** | Poll | IN Area 1 |
| **OUT Area1** | Poll | OUT Area 1 |
| **IN Area2** | None | None |

By setting the following connections as user-defined settings, the IN Area can be divided into two areas.

| Allocated Area | Connection type used | Connection path used |
|---|---|---|
| **IN Area 1** | Poll | IN Area 1 |
| **OUT Area1** | Poll | OUT Area 1 |
| **IN Area2** | COS or Cyclic | IN Area 2 |

### Setting from the DeviceNet Configurator

***1,2,3...***

1. In the Edit Device Parameters Window for the master, select the Unit in the **General** Tab Page, and click the **Advanced Setup** Button, and then click the **Connection** Tab.

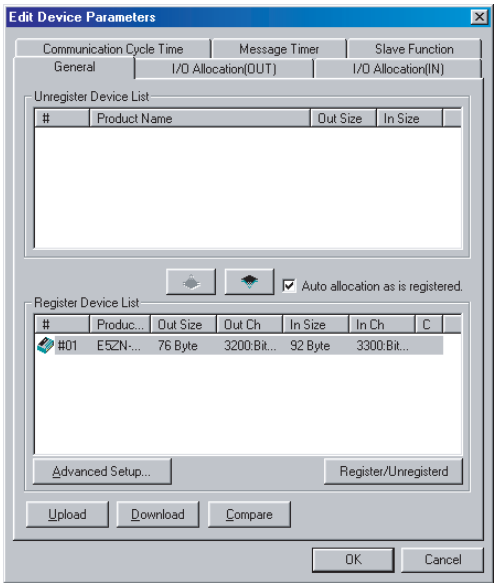


Note If the *Auto allocation as is registered* item is selected on the master's **General** Tab Page, a message will be displayed when the connection path is set indicating that the connection has been changed, causing the current I/O allocations to be cleared. When setting DeviceNet Communications Unit allocations automatically, reselect this item after setting a connection.

2. Select ***User Setup***, and select ***Use Poll Connection*** for one connection, the same as the default setting. Then select the connection path from the pull-down menu as ***Out Area 1*** for the OUT side, and ***In Area 1*** for the IN side.
For the second connection, select either ***Use COS Connection*** or ***Use Cyclic Connection***, then select ***In Area 2*** as from the pull-down menu on the IN side as the connection path. For the connection path on the OUT side, always set the same connection path as specified for the Poll connection.

Example: When *Use COS Connection* is selected.

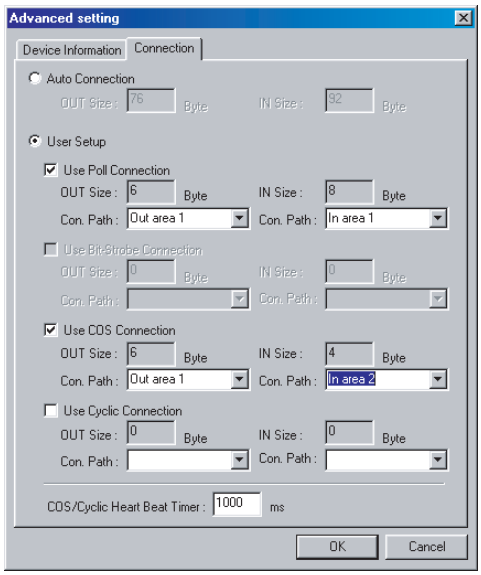


The output for the Poll connection and the output for the COS or Cyclic connection are sent in the same frame. Therefore, the same output size must be set for both connections when using a Poll and COS combination, or a Poll and Cyclic combination. When a COS or Cyclic connection are used, always set a dummy output size, and set the same connection path that is used for the Poll connection.

3. Click the **OK** Button, and return to the master's Edit Device Parameters Window. Click the **I/O Allocation (IN)** Tab and edit the I/O allocations. In the Edit I/O Allocate Window, the allocated words can be set for each connection.

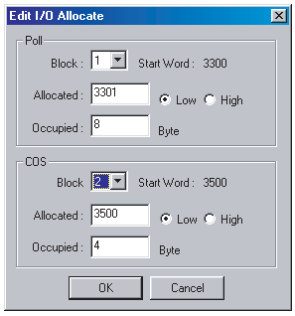


4. Click the **OK** Button, and return to the master's Edit Device Parameters Window.
5. Select the **General** Tab, and click the **Download** Button to write the set I/O memory allocations to the master.
6. Always click the **OK** Button to exit the master's Edit Device Parameters Window. If the **Cancel** Button or the ☒ Button is clicked, the settings will be invalid.

# 4-5 Ladder Programming Examples

## 4-5-1 RUN/STOP Sample Programming

The ladder programming example here is for the following execution conditions.

- Using simple I/O allocation to allocate data in the fixed allocation area 1 of a CS/CJ-series DeviceNet Unit (OUT Area = CIO 3200 to CIO 3263, IN Area = CIO 3300 to CIO 3363).

### Operation

- Executes RUN or STOP for the E5ZN Temperature Controller (to control Unit 0, ch1).
- The bit in the first word + 2 words of the OUT Area allocated by default is used as the RUN/STOP Bit (CIO 320200).
- RUN is executed when the RUN/STOP Bit (CIO 320200) turns ON for the execution condition 000000, after which the Output Enable Bit turns ON. When the RUN/STOP Confirmation Flag (CIO 330200) turns ON, the Output Enable Bit turns OFF.
- STOP is executed when the RUN/STOP Bit (CIO 320200) turns OFF for the execution condition 000100, after which the Output Enable Bit turns ON. Then, when the RUN/STOP Confirmation Flag (CIO 330200) turns OFF, the Output Enable Bit turns OFF.

### Programming Example

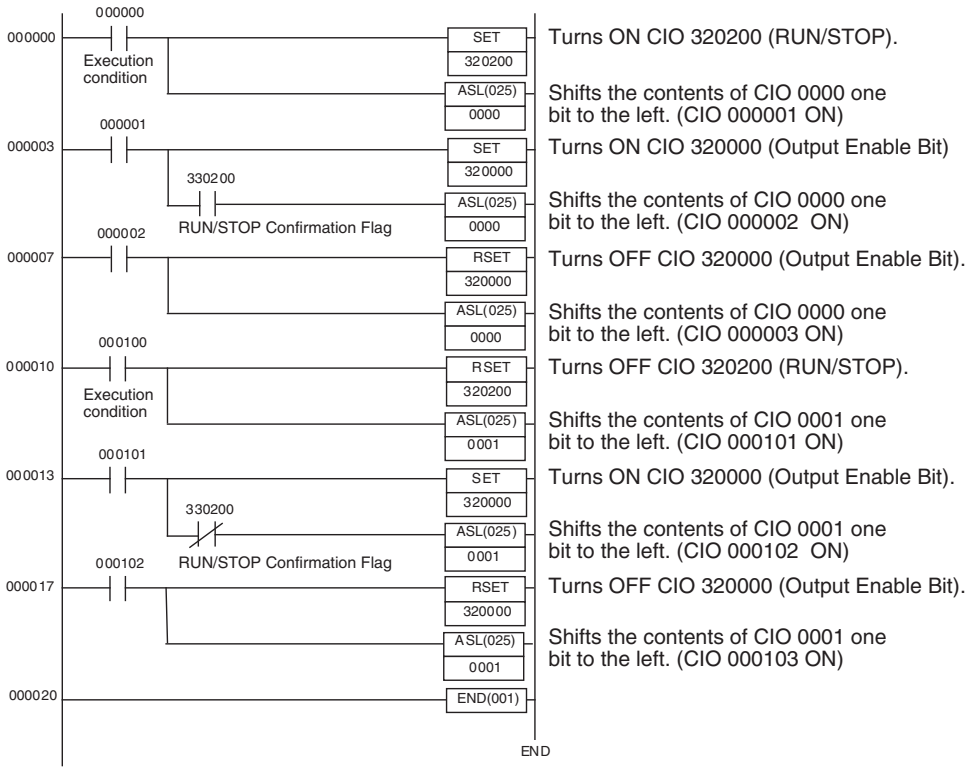

## 4-5-2 Change SP Sample Programming

The ladder programming example here is for the following execution conditions.

- Using simple I/O allocation to allocate data in the fixed allocation area 1 of a CS/CJ-series DeviceNet Unit of CS/CJ-series DeviceNet Unit (OUT Area = CIO 3200 to CIO 3263, IN Area = CIO 3300 to CIO 3363).

### Operation

- Writes the SP to the E5ZN Temperature Controller (SP = 150 hex, destination = Unit 0, ch1).
- Writes the SP to the first word + 6 words of the default allocated OUT Area (CIO 3206).
- The SP is first set in D1000, and then transferred to CIO 3206 at the start of the ladder program. After corresponding Output Enable Bits turn ON, and the SP is refreshed, the corresponding bits that were ON are turned OFF (to prevent overwriting of SPs that are being used for other operations).

### Programming Example

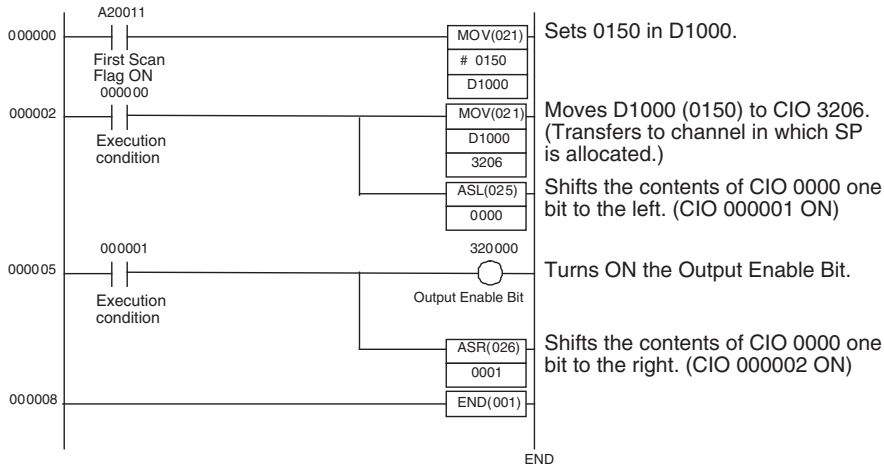


## 4-5-3 Change MV Upper Limit/Lower Limit Sample Programming

The ladder programming example here is for the following execution conditions.

- Using the Configurator to allocate I/O in the fixed allocation area 1 of a CS/CJ-series DeviceNet Unit (OUT Area = CIO 3200 to CIO 3263, IN Area = CIO 3300 to CIO 3363).

### Operation

- Writes the MV upper limit/lower limit to the E5ZN Temperature Controller (write destination = unit 0, ch1, write contents = upper limit: 50 hex, lower limit 20 hex)
- MV upper limit/lower limit cannot be used with simple I/O allocation, so the Configurator is used to allocate the settings. In this sample program, the MV upper limit is allocated in CIO 3218, the MV lower limit in CIO 3219, the setting area 0/1 for Units 0 to 7 in CIO 3220, the MV upper limit monitor in CIO 3326, and the MV lower limit monitor in CIO 3327.
- The MV upper limit is first set in D1000 and the MV lower limit in D1001. The values are then transferred to CIO 3218 and CIO 3219 at the start of the ladder program. The corresponding Setting Area 0/1 Bit and Output

Enable Bits turn ON, and the upper limit/lower limit values are refreshed. After refreshing, the MV upper limit/lower limit monitor values (CIO 3326, CIO 3327) are compared with the set values, and if they match, the corresponding Setting Area 0/1 Flag and Output Enable Bits turn OFF.

## Programming Example

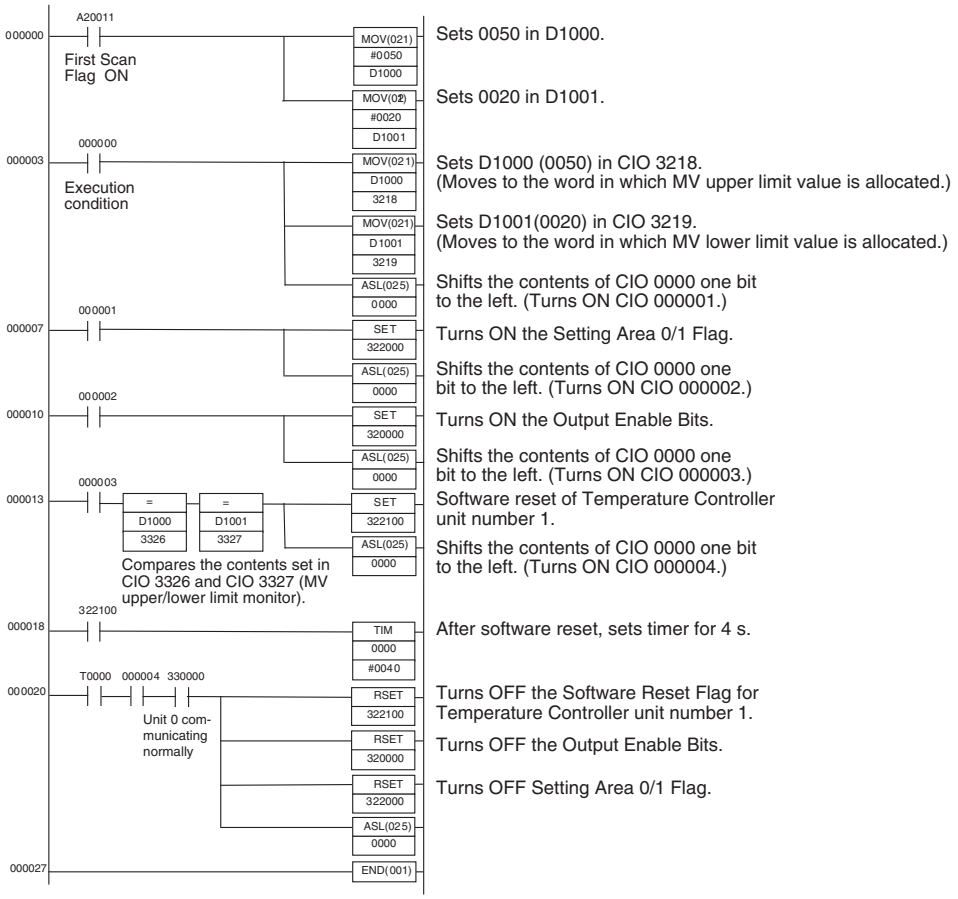

# SECTION 5
# Operations from the Configurator

This section describes the DeviceNet Configurator operations that can be used for the E5ZN-DRT DeviceNet Communications Unit except for allocation procedures, which are described in *SECTION 4 Remote I/O Communications*.


5-1 List of Operations from the Configurator . . . . . 70
5-2 Operations from the Edit Device Parameters Window . . . . . 71
5-2-1 Preparing the Configurator Connection . . . . . 71
5-2-2 Edit Device Parameters Window . . . . . 71
5-2-3 Setting DeviceNet Communications Unit Comment . . . . . 72
5-2-4 Setting Network Power Voltage Monitor . . . . . 73
5-2-5 Setting the Unit Conduction Time Monitor . . . . . 74
5-2-6 Setting Last Maintenance Date . . . . . 75
5-2-7 Copying Temperature Controller Parameters . . . . . 76
5-2-8 Sending Operation Commands to the Temperature Controllers . . . . 77
5-2-9 Editing Temperature Controller Parameters . . . . . 78
5-2-10 Setting Temperature Controller Comment . . . . . 80
5-2-11 Setting Temperature Controller Monitor Mode and Monitor Values 81
5-3 Maintenance Mode Window . . . . . 83
5-3-1 Maintenance Mode Window . . . . . 83
5-3-2 Maintenance Information Window . . . . . 85
5-4 DeviceNet Communications Unit Monitor . . . . . 88

# 5-1 List of Operations from the Configurator

This section describes the settings and operations performed by the Configurator apart from those operations explained in *SECTION 4 Remote I/O Communications*. Various setting and operation procedures are possible from the Configurator, and only examples are provided here.

**Note** Always use Ver. 2.31 or later of the Configurator for setting and monitoring the DeviceNet Communications Unit.

| Item | | | | Reference page |
|---|---|---|---|---|
| Master's Edit Device Parameters Window | | | | --- |
| | Registering DeviceNet Communications Unit in the master | | | 61 |
| | Setting DeviceNet Communications Unit connections | | | 63 |
| | Allocating data in the master | | | 61 |
| DeviceNet Communications Unit's Edit Device Parameters Window | | | | --- |
| | General Tab | | | --- |
| | | Setting details of DeviceNet Communications Unit | | 72 |
| | | Setting Network power voltage monitor value | | 73 |
| | | Setting DeviceNet Communications Unit conduction time monitor value | | 74 |
| | | Setting last maintenance date | | 75 |
| | | | Operation commands | 77 |
| | | | Setting details of Temperature Controllers | 80 |
| | | | Setting Temperature Controller monitor mode (Total ON or RUN time) | 81 |
| | | | Setting Temperature Controller monitor value (Total ON or RUN time monitor value) | 81 |
| | | | Editing Temperature Controller parameters | 78 |
| | I/O Allocations (OUT) Tab | | | --- |
| | | Allocating allocation data in the OUT Area | | 47 |
| | I/O Allocations (IN) Tab | | | --- |
| | | Allocating allocation data in the IN Area | | 49 |
| Monitor Device Window | | | | |
| Maintenance Information Window (accessed from the Maintenance Mode Window) | | | | 83 |
| | General Tab | | | --- |
| | | Displaying DeviceNet Communications Unit comment | | 85 |
| | | Displaying last maintenance date | | 85 |
| | | Displaying DeviceNet Communications Unit Conduction Time | | 85 |
| | | Displaying Network power voltage PV | | 85 |
| | | Displaying Network power voltage peak value | | 85 |
| | | Displaying Network power voltage bottom value | | 85 |
| | | Displaying Unit status (Temperature Controller power voltage status, communications power voltage monitor status, DeviceNet Communications Unit Conduction time monitor status, Temperature Controller total ON/RUN time monitor status) | | 85 |
| | Unit Tab | | | --- |
| | | Displaying the Temperature Controller comment | | 86 |
| | | Displaying the Temperature Controller total ON/RUN time | | 86 |
| | | Temperature Controller total ON/RUN time monitor value status | | 86 |
| | Error History Tab | | | --- |
| | | Displaying the communications error history | | 86 |

# 5-2 Operations from the Edit Device Parameters Window

## 5-2-1 Preparing the Configurator Connection

If problems occur in the connection with the Configurator, change the settings for the master. Problems will occur if the master's message timeout time is too short or the I/O size allocated in the master is different from that allocated in the DeviceNet Communications Unit.

### Configurator Connected Using a DeviceNet Interface Board (Card)

***1,2,3...***

1. Right-click the icon for the master, then select ***Monitor*** to display the Monitor Device Window.
2. Click the **Stop Remote I/O Communication** Button to stop remote I/O communications with the DeviceNet Communications Unit.

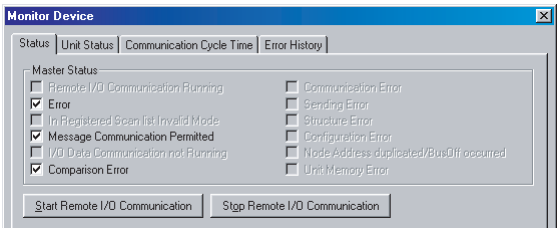


**Note** This operation is not required if no error has occurred in the master node.

### Master Connected using Serial Line

***1,2,3...***

1. Double-click the icon for the master to display the Edit Device Parameters Window and click the **Message Timer** Tab.
2. Double-click the unit number of the DeviceNet Communications Unit, set 5,000 ms in the Setup Message Timer Window, and execute download.

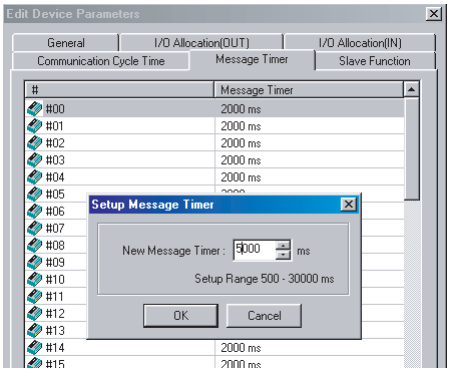


## 5-2-2 Edit Device Parameters Window

***1,2,3...***

1. Turn ON the power to the DeviceNet Communications Unit and master, and then put the Configurator online, and select ***Upload*** from the *Network* Menu.
   The configuration of Units connected in the Network will be read and displayed in the Network Configuration Window.

2. Double-click the icon for the DeviceNet Communications Unit in the Network Configuration Window, or right-click and select ***Parameter*** and ***Edit*** to display the Edit Device Parameters Window for the DeviceNet Communications Unit.

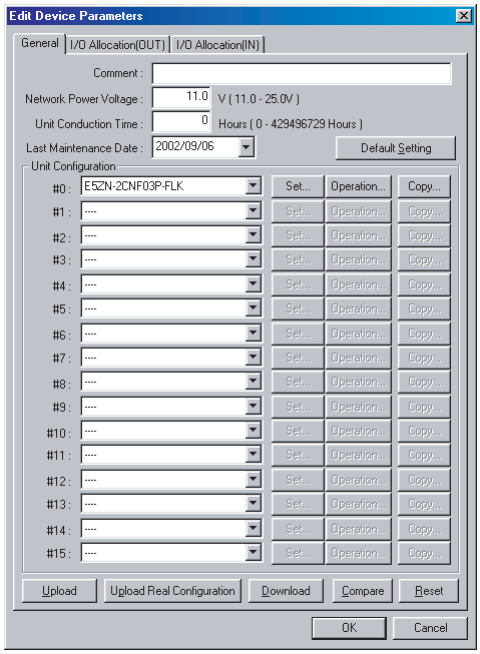


**Note**

1. Click the Upload Button to read the Unit configuration registered in the DeviceNet Communications Unit.
2. Click the Upload Real Configuration Button to read the configuration of the Temperature Controllers currently connected to the DeviceNet Communications Unit at that time.
3. Click the Reset Button to reset the DeviceNet Communications Unit. The status of the Unit will be the same as if the power had been turned OFF and ON again.
4. Click the Default Setting Button to initialize all the DeviceNet Communications Unit settings, and return them to the factory setting status. The Configurator screen will not return to factory setting status, however, so click the Upload Button to read the settings again.

⚠ **Caution** Always turn OFF the Output Enable Bits when using the Configurator to download the parameters set in the Temperature Controller. If the Output Enable Bits are not OFF when downloading, the set values allocated with I/O and the set values downloaded with the Configurator will compete, causing the set values allocated using I/O to be enabled. For details on Output Enable Bits, refer to *Output Enable Bits (Type Number 1, 2)* on page 58.

## 5-2-3 Setting DeviceNet Communications Unit Comment

A name can be assigned to the DeviceNet Communications Unit and recorded in the Unit. The name can be entered using up to 32 standard characters. The comment for the registered DeviceNet Communications Unit is used in the Configurator display, such as in the Maintenance Mode Window (refer to page 83).

**Note** The DeviceNet Communications Unit comment is stored even when the power is turned OFF.

## Setting Method

***1,2,3...*** In the DeviceNet Communications Unit's Edit Device Parameters Window, click the **General** Tab, and enter a comment in the *Comment* field at the top of the Tab Page.

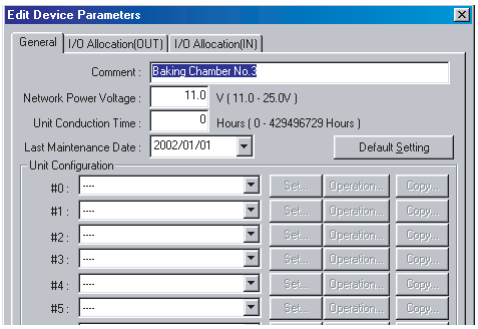


**Note** Comments can also be set by right-clicking the DeviceNet Communications Unit in the Network Configuration Window and selecting ***Change Device Comment***.
After setting a comment, right-click and select ***Parameter*** and ***Download*** to write the comment to the DeviceNet Communications Unit.

## 5-2-4 Setting Network Power Voltage Monitor

With the Network power voltage monitor, the present value, bottom (minimum) value, and peak (maximum) value are recorded in the DeviceNet Communications Unit, and when the voltage drops below the set monitor value, the Network Power Voltage Error Flag in the Unit Status Area will be turned ON.

The PV, bottom value, and peak value of the network power supply, and the Unit Status Area can be checked from the Maintenance Mode Window.

**Note**

1. The range of the network power voltage for the DeviceNet Communications Unit is 11 to 25 V, so if the network power voltage drops below 11 V, the operation for reading the measured voltage value may not function properly.
   - The default monitor value for the network power voltage is set to 11.0 V.
   - The network power supply monitor value is held even when the power is turned OFF.
2. The present, bottom, and peak values for the network power voltage are cleared when the network power is turned OFF.

## Setting Method

***1,2,3...*** Open the Edit Device Parameters Window for the DeviceNet Communications Unit, select the **General** Tab, and enter the desired value in the *Network Power Voltage* field.

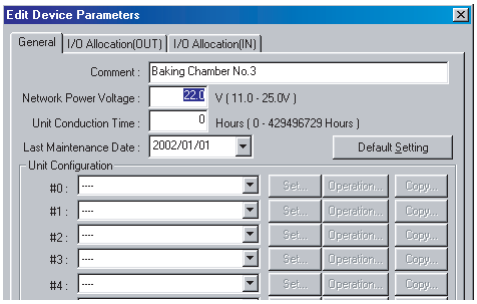


## 5-2-5 Setting the Unit Conduction Time Monitor

The DeviceNet Communications Unit can record the conduction time (time that communications power is supplied to the Unit), and when the value exceeds the set monitor value, the Unit Maintenance Bit in the Unit Status Area will be turned ON.

This function provides a guideline for when to replace the Unit.

Measuring unit: 0.1 h

Measured time: 0 to 429496729.5 h
(stored data: 00000000 to FFFFFFFF hex)

Monitor value setting range: 0 to 429496729 hours (specify as an integer)

The present value for conduction time and the Unit Status Area can be checked in the Maintenance Information Window when using Maintenance Mode.

**Note** The present value and monitor value for the conduction time are held even when the power is turned OFF.

## Setting Method

***1,2,3...*** Open the Edit Device Parameters Window for the DeviceNet Communications Unit, select the **General** Tab, and enter the desired value in the *Unit Conduction Time* field.

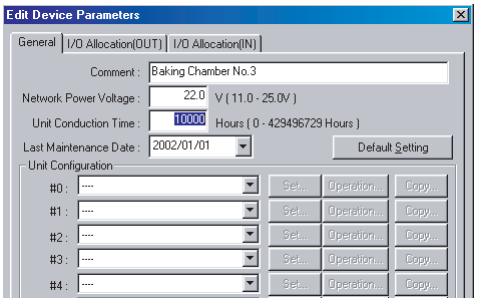

## 5-2-6 Setting Last Maintenance Date

With DeviceNet Communications Units, the last date on which maintenance was last performed can be written to the Unit. This means that the timing for future maintenance can be judged more easily. The recorded date can be checked from the Maintenance Mode Window.

**Note** The present value and monitor value for the conduction time are held even when the power is turned OFF.

### Setting Method

***1,2,3...*** Open the Edit Device Parameters Window for the DeviceNet Communications Unit, click the **General** Tab, and select the applicable date from the calendar in the pull-down menu in the *Last Maintenance Date* field.

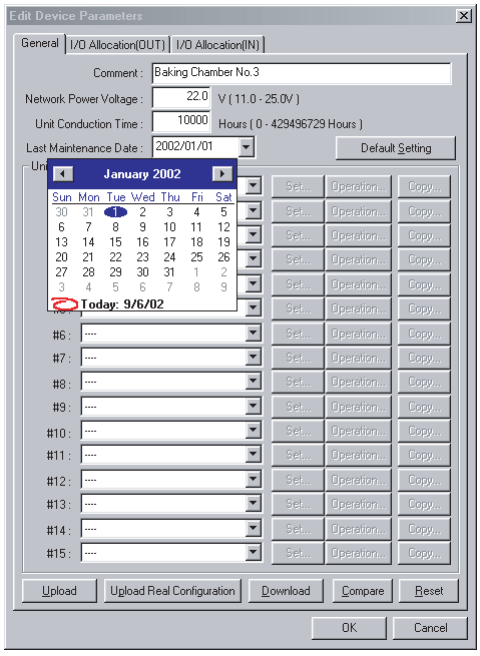

## 5-2-7 Copying Temperature Controller Parameters

Parameters of the Temperature Controllers connected to the DeviceNet Communications Unit can be easily copied between Temperature Controllers by simply specifying the copy source and destination. The all the parameters for one channel of the Temperature Controller are copied, so multiple Temperature Controllers requiring the same settings can be easily set.

### Setting Method

***1,2,3...***

1. Open the Edit Device Parameters Window for the DeviceNet Communications Unit, select the **General** Tab, and click the **Copy** Button of the Temperature Controller unit number under *Unit Configuration* from which the parameters are to be copied.

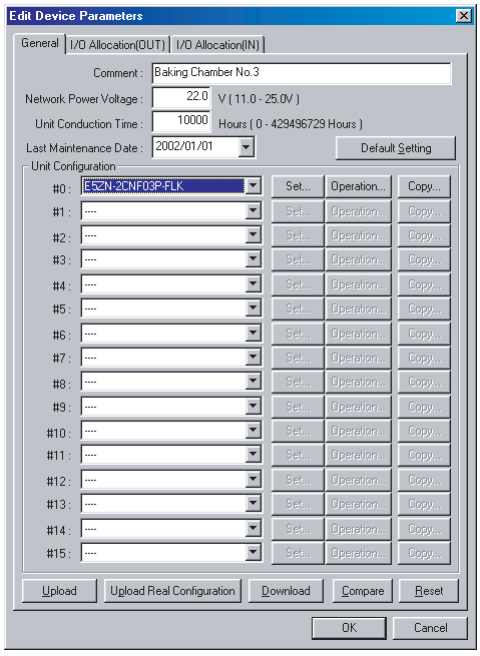


2. The Copy Parameters Window will be displayed.

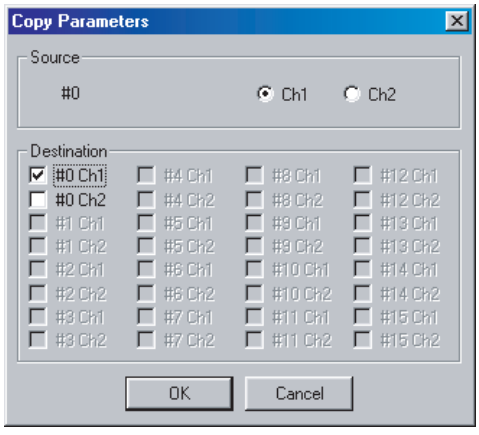


3. Select the channel from which to copy, specify the unit number and channel as the copy destination, and then click the **OK** Button. The parameters will be copied and the display will return to the Edit Device Parameters Window for the DeviceNet Communications Unit.

4. From the Edit Device Parameters Window, select the **General** Tab, and click the **Download** Button to write all the parameters copied from the Temperature Controller.

## 5-2-8 Sending Operation Commands to the Temperature Controllers

The Configurator can be used to send operation commands to each of the Temperature Controllers through the DeviceNet Communications Unit.

The following operation commands can be executed from the Configurator.

- RUN/STOP
- Move to protect level
- AT execute/cancel
- Auto/manual
- Write mode
- Alarm latch cancel

### Operating Method

***1,2,3...***

1. Open the Edit Device Parameters Window for the DeviceNet Communications Unit, select the **General** Tab, and click the **Operation** Button for the Temperature Controller unit number in the *Unit Configuration* field.

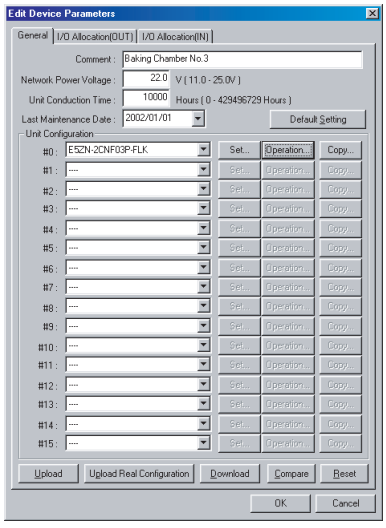


2. The window for sending operation commands to the specified Temperature Controller will be displayed.

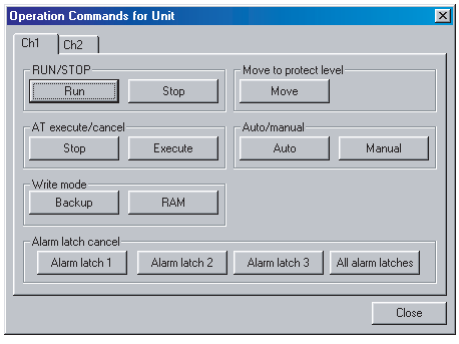


3. Select the Tab Page for the channel that will be sent the command, and click the button of the operation to be executed.

4. After the operation command is executed, click the **Close** Button.
   The display will return to the Edit Device Parameters Window for the DeviceNet Communications Unit.

**Note** By clicking the Manual Button, and changing the manual manipulated variable in the Edit Unit Parameters Window, the output can be changed. For this operation, click the Download Setting Area 0 Button to stop the channel resetting. By clicking the Move Button under *Move to Protect Level*, operations can be protected locally from the Setting Display Unit to prevent malfunctions.

## 5-2-9 Editing Temperature Controller Parameters

The Configurator can be used to edit the parameters of each connected Temperature Controller through the DeviceNet Communications Unit.

***1,2,3...*** 1. Open the Edit Device Parameters Window for the DeviceNet Communications Unit, click the **General** Tab and click the **Set** Button next to the Temperature Controller unit number under *Unit Configuration*.

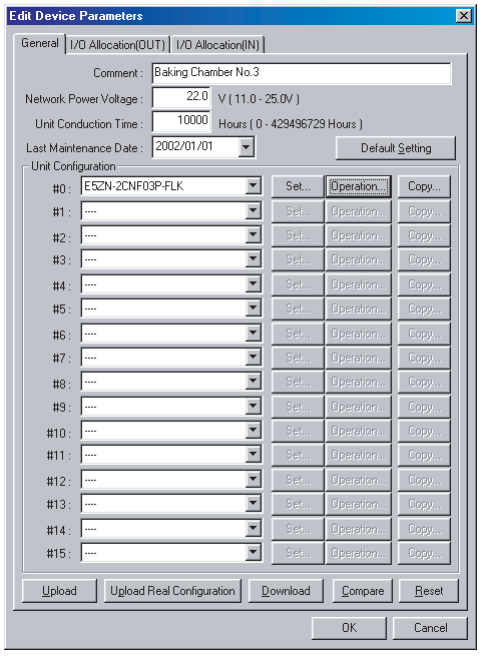

2. A window for editing the unit parameters of the corresponding Temperature Controller will be displayed.

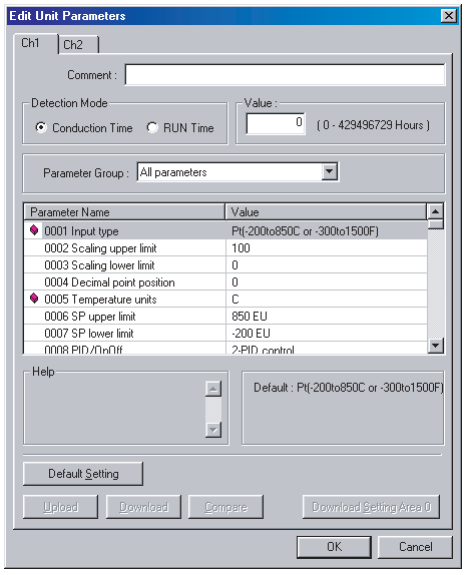


Note a) This icon indicates parameters that are shared by ch1 and ch2. If a value for either ch1 or ch2 is changed, the other value will also change.

This icon indicates a parameter that is read only.

b) The Temperature Controller parameters are stored even if the power is turned OFF.

3. Select the tab page of the channel for which the parameters are to be edited, and edit the parameters.
4. Click the parameter to be edited, and change the contents.

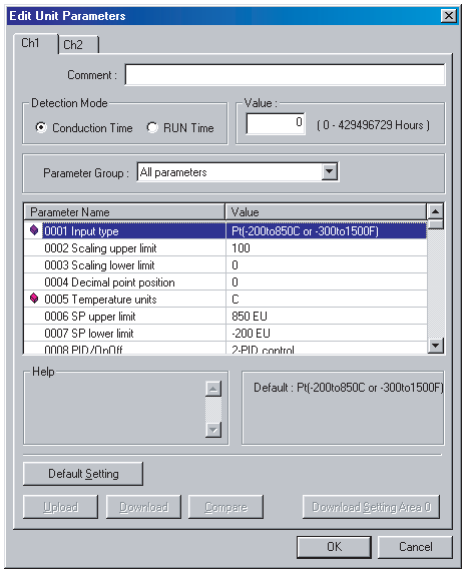


Note a) Click the Download Button to download the contents of Setting Area 0/1. When this operation is performed, the Unit will be reset, so do not use this operation while the Unit is in RUN mode.

b) By clicking the ▼ Button in the *Parameter Group* field, the displayed parameters can be changed as follows:

- All parameters
- Setting area 0
- Setting area 1

c) Click the Default Setting Button to return parameters to the factory settings.

d) Click the Upload, Download, Compare, and Default Setting Buttons in the Edit Unit Parameters Window to perform operations on the parameters for the specified channel only.

e) Click the Download Setting Area 0 Button, to download the parameters in Setting Area 0. The Unit will not be reset.

5. Click the **OK** Button.
   The display will return to the Edit Device Parameters Window for the DeviceNet Communications Unit.

   Note All the new settings will be canceled if the Cancel Button or ✕ Button is clicked to exit the window. Always exit the window by clicking the OK Button.

6. To continue editing the parameters of other Temperature Controllers, repeat the procedure from step 1.
7. After editing the parameters of each Temperature Controller, return to the **General** Tab Page and click the **Download** Button to download the set parameters to the DeviceNet Communications Unit in a batch.

## 5-2-10 Setting Temperature Controller Comment

Names can be assigned to each of the Temperature Controllers, and recorded in the DeviceNet Communications Unit. Each name can be entered using up to 32 standard characters.

The registered Temperature Controller comments are used in the Configurator, such as in the Monitor Window and Maintenance Mode Window.

**Note** The comments set for Temperature Controllers are stored even when the power is turned OFF.

## Setting Method

***1,2,3...***

1. Open the Edit Device Parameters Window for the DeviceNet Communications Unit, select the **General** Tab Page, and click the **Set** Button.
   The Edit Unit Parameters Window will be displayed.

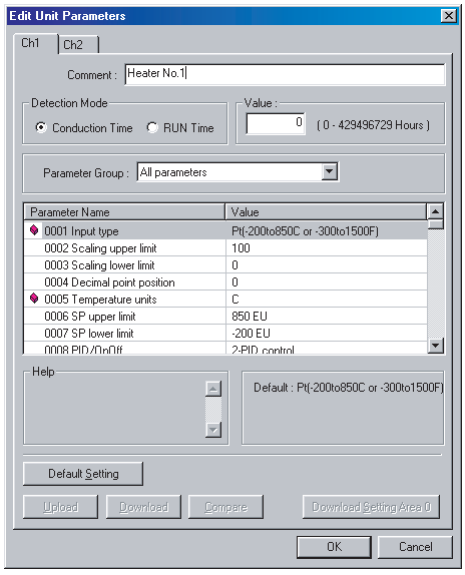


2. Enter the name or other comment in the *Comment* field.
3. Click the **OK** Button to return to the Edit Device Parameters Window.

   Note If the window is exited by clicking the Cancel Button or ☒ Button, all the new settings will be canceled. Always click the OK Button to exit the window.
4. To continue setting comments for other Temperature Controllers, repeat the procedure from step 1.
5. After entering comments for each Temperature Controller, return to the **General** Tab Page and click the **Download** Button to write the comments to the DeviceNet Communications Unit in a batch.

## 5-2-11 Setting Temperature Controller Monitor Mode and Monitor Values

A conduction time monitor and total RUN time monitor can be used to calculate the conduction time or RUN (control) time of connected Temperature Controllers and record the time in the DeviceNet Communications Unit. When the total time exceeds the set monitor value, the Temperature Controller Maintenance Bit in the Unit Status Area will be turned ON.

These monitors provide a guideline for when to replace the Temperature Controllers.

Set whether to total the Unit conduction time or RUN time using the MONITOR mode.

Measuring unit: 0.1 h (The Configurator display is in 1-h units.)

Measured time: 0 to 429496729 h
(stored data: 00000000 to FFFFFFFF hex)

Monitor value setting range: 0 to 429496729 hours

The present values for the conduction time or RUN time, and the Unit status can be checked from the Maintenance Mode Window.

**Note**

1. The present values and monitor values for conduction time or RUN time are stored even when the power is turned OFF.

2. The conduction time monitor and total RUN time monitor cannot be used at the same time for a single channel.
3. The total time is not calculated when the communications power to the DeviceNet Communications Unit is turned OFF.
4. The DeviceNet Communications Unit checks the ON/RUN status of the specified Temperature Controller approximately every 0.1 hour (6 minutes). Depending on the measurement timing, the accurate may not be obtained due to the timing interval, as shown in the following examples.

**Example 1: Using the Unit conduction time monitor when communications power is turned ON and OFF for three minutes each (A)**

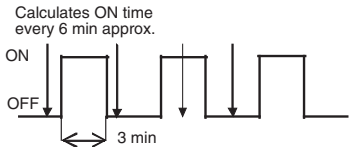


In the above diagram, the actual conduction time is 3 minutes × 3 = 9 minutes, but the status is ON only once at the time the measurement is taken, so the conduction time is calculated as 6 minutes.

**Example 2: Using the Unit conduction time monitor when communications power is turned ON and OFF for three minutes each (B)**

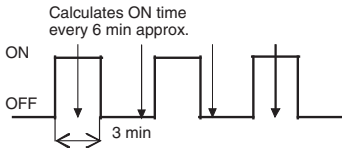


In the above diagram, the actual conduction time is 3 minutes × 3 = 9 minutes, but the status is ON only twice at the time the measurement is taken, so the conduction time is calculated as 12 minutes.

**Example 3: Using the Unit conduction time monitor when communications power is turned ON for 9 minutes, OFF for 3 minutes, and ON for 9 minutes**

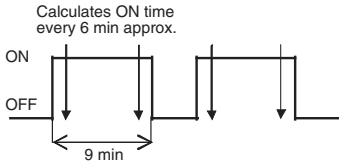


In the above diagram, the actual conduction time is 9 minutes × 2 = 18 minutes, but the status is ON four times when the measurement is taken, so the conduction time is calculated as 24 minutes.

## Setting Method

***1,2,3...***

1. Open the Edit Unit Parameters Window, select the monitor mode to be used, Conduction *Time* or *RUN Time*, under the *Detection Mode*, and enter the monitoring time in the *Value* field.

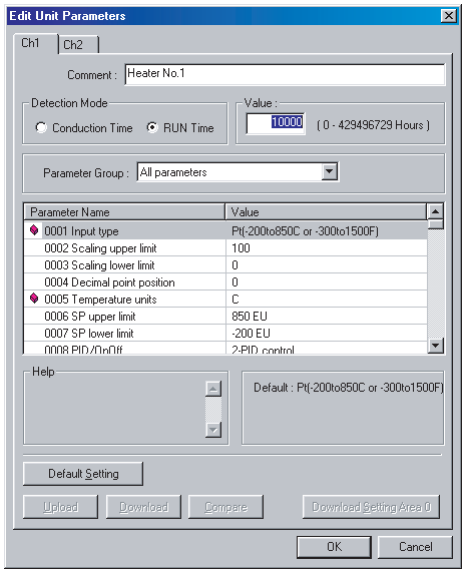


2. Click the **OK** Button to return to the Edit Device Parameters Window.

   Note All the settings will be cleared if the Cancel Button or ☒ Button is used to exit the window. Always click the OK Button to exit the window.

3. To continue setting monitor values for other Temperature Controllers, repeat the procedure from step 1.
4. After setting monitor values for each Temperature Controller, return to the **General** Tab Page and click the **Download** Button to write the monitor values for all the Temperature Controllers to the DeviceNet Communications Unit in a batch.

# 5-3 Maintenance Mode Window

The OMRON DeviceNet Configurator (Ver. 2.20 or later) is provided with two Network display windows, consisting of the standard Main Window and a Maintenance Mode Window, enabling DeviceNet status information to be checked easily.

## 5-3-1 Maintenance Mode Window

The Maintenance Mode Window is different from the Main Window and is used to easily monitor the Network status and the status of each node.

In the Network Configuration Window of the Maintenance Mode Window, when an error is detected in a node, a yellow warning icon is displayed next to the corresponding node icon, enabling errors to be checked immediately.

By double-clicking on a node in the Network Configuration Window of the Maintenance Mode Window, the Maintenance Information Window is displayed, and the status of the node can be checked.

The Maintenance Mode Window is displayed with a pale blue background.

## Maintenance Mode Window Display

Use either of the following two procedures to switch between the Main Window and the Maintenance Mode Window.

### Switching from the Icons in the Toolbar

***1,2,3...***

1. From the Main Window, click the icon in the Configurator Toolbar to switch to the Maintenance Mode Window.
2. Click the icon to return to the Main Window.

### Switching from the *View* Menu

***1,2,3...***

1. From the menu bar, select ***View*** and ***Large Icons (Maintenance Mode)*** to switch to the Maintenance Mode Window.
2. From the menu bar, select ***View*** and ***Large Icons*** to return to the Main Window.

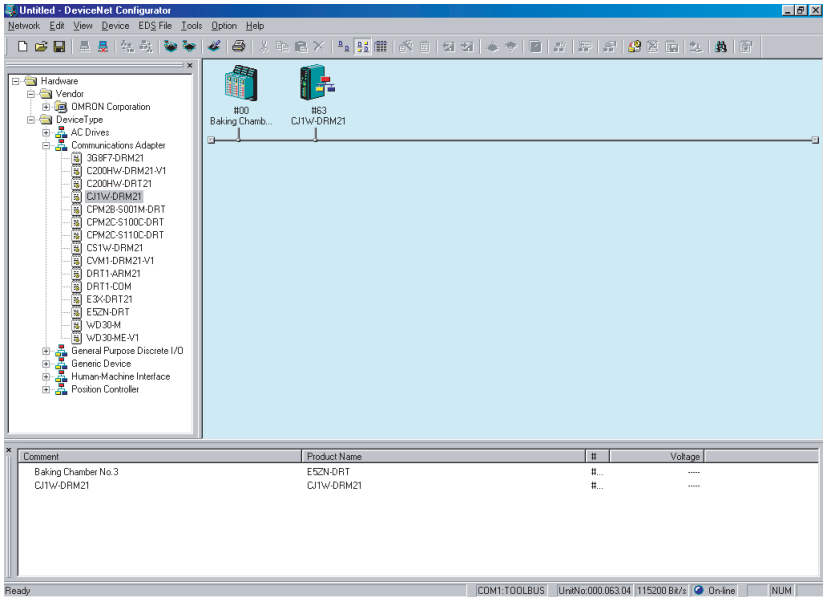


**Note**

1. This icon indicates that the Network power supply is low.
2. This icon indicates that the Maintenance Bit is ON.

## 5-3-2 Maintenance Information Window

### General Tab Page

***1,2,3...*** From the Maintenance Mode Window, double-click the icon for the DeviceNet Communications Unit in the Network Configuration Window. The following Maintenance Information Window for the DeviceNet Communications Unit will be displayed.

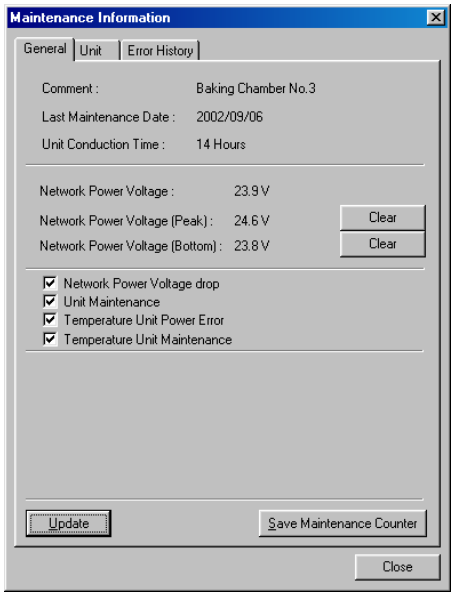


The following information can be checked from the General Tab Page.

| Item | Details |
|---|---|
| Comment | Displays the comment set using the Unit comment function. |
| Last Maintenance Date | Displays the last maintenance date set in the DeviceNet Communications Unit. |
| Unit Conduction Time | Displays the present value for the conduction time of the DeviceNet Communications Unit. |
| Network Power Voltage | Displays the present value for the communications power voltage being supplied to the DeviceNet Communications Unit. |
| Network Peak Power Voltage | Displays the peak communications power voltage supplied to the DeviceNet Communications Unit after startup. |
| Network Bottom Power Voltage | Displays the bottom communications power voltage supplied to the DeviceNet Communications Unit after startup. |
| Unit Status | Displays the Temperature Controller power voltage status (status of power supplied to the Terminal Unit). |
| | Displays the communications power voltage monitor value status (status from Network power voltage monitor). |
| | Displays the DeviceNet Communications Unit conduction time monitor status (monitor status from Unit conduction time monitor). |
| | Displays the Temperature Controller total ON/RUN time monitor status (monitor status from ON/RUN time monitor). |
| | (The contents of this Unit Status is the same as the allocation data Unit status.) |

**Note** 1. Click the Refresh Button to read the maintenance information, error history, and Temperature Controller maintenance information from the DeviceNet Communications Unit and display the most recent values.

2. Click the Save Maintenance Counter Button to save the Unit conduction time and Temperature Controller maintenance counter values in the DeviceNet Communications Unit's internal non-volatile memory.
3. Even if the Save Maintenance Counter Button is not clicked, the values will normally be saved in the non-volatile memory once every six minutes.

## Unit Tab Page

***1,2,3...***

1. From the Maintenance Mode Window, double-click the icon for the DeviceNet Communications Unit in the Network Configuration Window.
2. The Maintenance Information Window for the DeviceNet Communications Unit will be displayed. Select the **Unit** Tab.
3. When the present values for the Unit conduction time or total RUN time exceed the monitor value set in the total ON/RUN time monitor, a warning icon will be displayed beside the corresponding unit number in the unit number column.

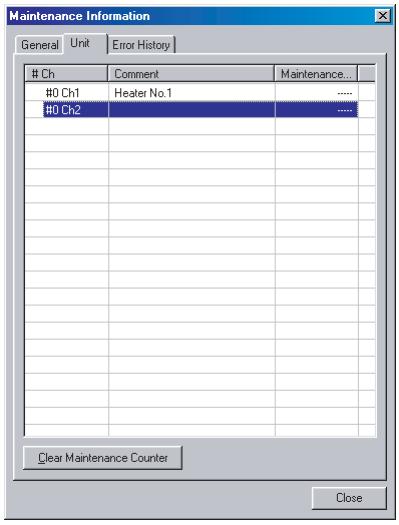


The following information can be confirmed for each of the Temperature Controllers connected to the DeviceNet Communications Unit.

| Item | Details |
|---|---|
| Comment | Displays the Temperature Controller comment set using the comment function. |
| Maintenance Counter | Displays the present value for the Unit conduction time or total RUN time measured using the total ON/RUN time monitor. |

**Note** Click the Clear Maintenance Counter Button to clear the contents of the maintenance counter.

## Error History Tab Page

***1,2,3...***

1. From the Maintenance Mode Window, double-click the icon for the DeviceNet Communications Unit in the Network Configuration Window.
2. The Maintenance Information Window for the DeviceNet Communications Unit will be displayed. Select the **Error History** Tab.

3. The Error History Tab Page displays the error status information (communications error code, communications power voltage when the error occurred) that is recorded in the DeviceNet Communications Unit for the last four communications errors that occurred.

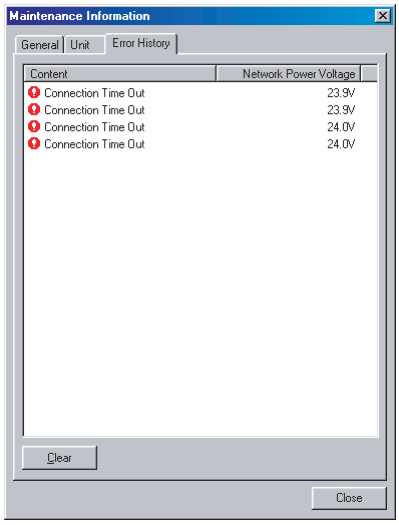


**Note**

1. When four communications errors are already recorded in the error history and a new communications error occurs, the earliest error will be deleted and the most recent communications error will be recorded.
2. Click the Clear Button to clear the communications error history in the DeviceNet Communications Unit. The display in the Error History Tab Page will also be cleared.

# 5-4 DeviceNet Communications Unit Monitor

The monitor lists various status information for the DeviceNet Communications Unit.

## Displaying the Monitor

***1,2,3...***

1. Select ***Network*** and ***Connection***, and put the Configurator online.
2. Right-click the icon of the DeviceNet Communications Unit, and select ***Monitor***. The following Monitor Device Window will be displayed.

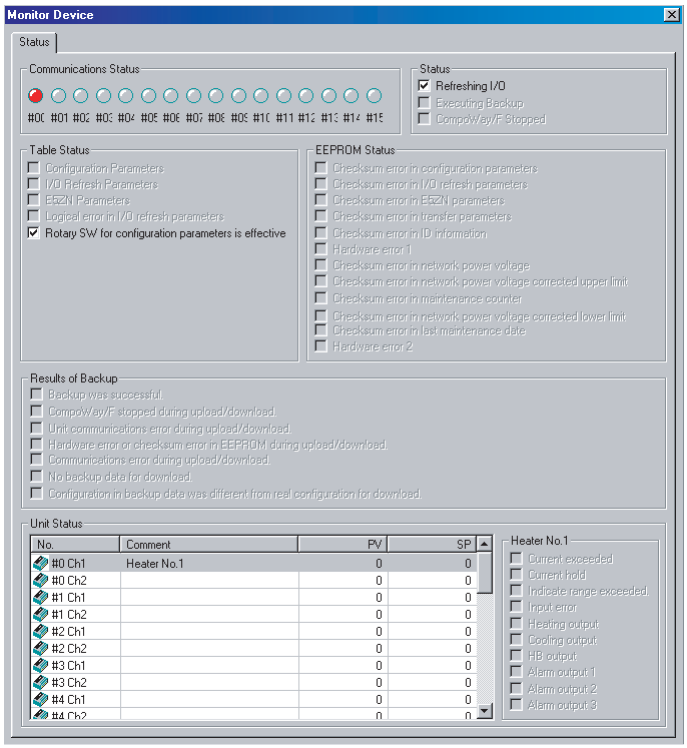


| Item | Details |
|---|---|
| Communications Status | Displays the communications status of the Temperature Controllers connected to the Communications Unit.<br>(Blue) Communicating normally.<br>(Red) A communications error has occurred. |
| Status | Displays the Communications Unit's present operating status. |
| Table Status | Displays the status of the Communications Unit's setup table. |
| EEPROM Status | Displays the status of the Communications Unit's non-volatile memory (EEPROM). |
| Results of Backup | Displays the results of the backup operation. |
| Unit Status | Displays the Temperature Controller process value (PV), and set value (SP).<br>The details for the Temperature Controller that is positioned under the cursor are displayed on the right of the Tab Page. |

# SECTION 6
# Explicit Message Communications

This section describes how to send explicit messages to the E5ZN-DRT DeviceNet Communications Unit, including how to send CompoWay/F commands using explicit messages. CompoWay/F commands are supported by the E5ZN Temperature Controller.


6-1 Overview of Explicit Message Communications . . . . . 90
6-1-1 Explicit Message Communications . . . . . 90
6-1-2 Explicit Messages Types. . . . . 91
6-1-3 Explicit Messages Basic Format. . . . . 91
6-2 Sending CompoWay/F Commands to a Temperature Controller . . . . . 93
6-2-1 CompoWay/F Binary Commands. . . . . 94
6-2-2 CompoWay/F ASCII Commands . . . . . 95
6-2-3 List of FINS-mini Commands . . . . . 96
6-3 Examples Using CompoWay/F Commands . . . . . 97
6-4 Example of Sending Explicit Messages . . . . . 103
6-5 Sending Explicit Messages . . . . . 104
6-5-1 Reading General Status. . . . . 105
6-5-2 Setting and Monitoring the Unit Conduction Time . . . . . 105
6-5-3 Writing Maintenance Mode Information . . . . . 105
6-5-4 Setting and Monitoring Temperature Controller Channels . . . . . 106

# 6-1 Overview of Explicit Message Communications

## 6-1-1 Explicit Message Communications

Explicit message communications is a communications protocol for sending commands from the master as explicit messages, and receiving explicit messages as responses from the nodes that receive the commands.

Explicit messages can be sent from the master to the DeviceNet Communications Unit to read and write the Temperature Controller variable area, send operation commands, and read and write various other functions supported by the DeviceNet Communications Unit.

Explicit message communications can be used to send and receive data that is not allocated in the IN and OUT Areas due to word size restrictions, and data that does not require the frequent refreshing used by the IN Area and OUT Area.

Use either of the following two methods depending on the application.

**Reading/Writing Temperature Controller Variable Area Data and Sending Operation Commands**

Send Compoway/F communications commands to Temperature Controllers by embedding them in explicit messages.

**Reading/Writing Maintenance Information for the DeviceNet Communications Unit and Temperature Controllers**

Send explicit messages to the DeviceNet Communications Unit.

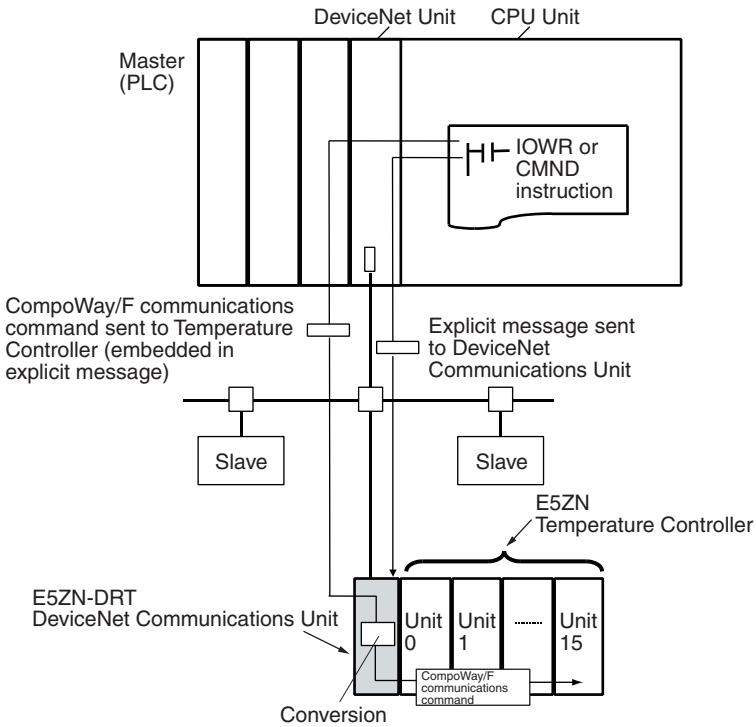


**Note** This manual describes the contents of explicit messages that can be sent to DeviceNet Communications Units. For details on the methods of sending explicit messages, refer to the operation manual for the DeviceNet Unit being used as the master.

## 6-1-2 Explicit Messages Types

The explicit messages sent to the DeviceNet Communications Unit can be divided into two types, as follows:

### Sending CompoWay/F Communications Commands to Temperature Controllers

The master can send CompoWay/F communications commands to the Temperature Controllers by sending to the DeviceNet Communications Unit as explicit messages data.

The DeviceNet Communications Unit automatically converts the explicit messages to CompoWay/F communications commands and sends them to the Temperature Controllers. The responses from the Temperature Controllers are converted into explicit messages and returned to the master. CompoWay/F commands are used to read from and write to the Temperature Controller variable area and to execute operation commands.

CompoWay/F commands consist of binary commands and ASCII commands.

**CompoWay/F Binary Commands**

CompoWay/F binary commands are CompoWay/F communications commands expressed in hexadecimal, and are easy to execute from ladder programs. CompoWay/F communications commands that include ASCII data, however, cannot be sent or received. Therefore, Read Controller Attribute (05 03) and broadcasting (unit number = XX) cannot be used.

**CompoWay/F ASCII Commands**

CompoWay/F ASCII commands are CompoWay/F communications commands expressed in ASCII, so numerical values must be converted to ASCII when executing these commands from a ladder program. All CompoWay/F communications commands can be sent and received, including Read Controller Attribute (05 03) and broadcasting (unit number = XX), which cannot be used with CompoWay/F binary commands.

### Sending Explicit Messages to the DeviceNet Communications Unit

The master can send explicit messages to the DeviceNet Communications Unit to control various operations supported by the DeviceNet Communications Unit and to read settings and status information.

Explicit messages are used to read and write various maintenance data for the DeviceNet Communications Unit and Temperature Controllers.

## 6-1-3 Explicit Messages Basic Format

The basic format of explicit message commands and responses is as follows:

### Command Block

| Destination node address | Service code | Class ID | Instance ID | Attribute ID | Data |
|---|---|---|---|---|---|

**Destination Node Address**

This parameter specifies the node address of the DeviceNet Communications Unit to which the explicit messages (commands) will be sent in single-byte (2-digit) hexadecimal.

**Service Code, Class ID, Instance ID, Attribute ID**

These parameters specify the command type, processing target, and processing details.

When sending explicit messages to the DeviceNet Communications Unit, specify the target Temperature Controller in the Instance ID. (Specify the Temperature Controller's unit number and channel number).

The Attribute ID does not need to be specified for some commands.

**Data**

Specifies the details of the commands and set values. The data section is not required for read commands.

**Note** The number of digits used for the Class ID, Instance ID, and Attribute ID depends on the master used. When sending parameters from an OMRON Master Unit, the values are expressed as follows:

Class ID: 4-digit (2-byte) hexadecimal
Instance ID: 4-digit (2-byte) hexadecimal
Attribute ID: 2-digit (1-byte) hexadecimal

## Response Block

- The following format is used when a normal response is returned for the sent explicit message.

| No. of bytes received | Source node address | Service code | Data |
|---|---|---|---|

- The following format is used when an error response is returned for the sent explicit message.

| No. of bytes received 0004 hex, fixed | Source node address | Service code | Error code (2 bytes, fixed) |
|---|---|---|---|

**Number of Bytes Received**

The number of data bytes received from the source node address is returned as a hexadecimal. When an error response is returned for the explicit message, the contents is always 0004 hex.

**Source Node Address**

The node address of the master that sent the explicit message is returned as a hexadecimal.

**Service Code**

For normal responses, the value for when the most significant bit (bit 07) of the service code specified in the command turns ON is returned. (When the service code of the command is 0E hex, the service code of the response will be 8E hex.) When an error response is returned for the explicit message, the contents is always 94 hex.

**Data**

Read data is included only when a read command is executed.

**Error Code**

The following table shows the error codes for explicit messages.

| Error code | Error name | Cause |
|---|---|---|
| 08FF | Service not supported | The service code is not supported. |
| 09FF | Invalid Attribute value | The Attribute Value is not supported. |
| 16FF | Object does not exist | The Instance ID is not supported. |
| 15FF | Too much data | The data string is too long. |
| 13FF | Not enough data | The data string is too short. |
| 14FF | Attribute not supported | The Instance ID is not supported. |
| 0CFF | Object state conflict | The command cannot be executed.<br>• Error in communications with Temperature Controller.<br>• The BCC value did not match in the response from the Temperature Controller. |
| 20FF | Invalid Parameter | The specified parameter is incorrect. |
| 0EFF | Attribute not settable | A write service code was sent for a read-only Attribute ID. |
| 1F** | Vendor specific error | An error response was returned for a CompoWay/F message sent to the Temperature Controller.<br>**Note** The ** in the code indicate the MRC of the CompoWay/F response. |

**Note** For DeviceNet Communications Units, set the DeviceNet message monitor timer to 6 s or longer, using the following procedure.

**Using a CS/CJ-series DeviceNet Unit**

Set and send the timer as follows:

***1,2,3...***

1. From the Configurator, select ***Network*** and ***Connection*** to switch to online operation.
2. Select and double-click the CS/CJ-series DeviceNet Unit.
3. Set the value of the message timer for the applicable DeviceNet Communications Unit node address to 6000 ms. (In the following display, the DeviceNet Communications Unit node address is 0.)

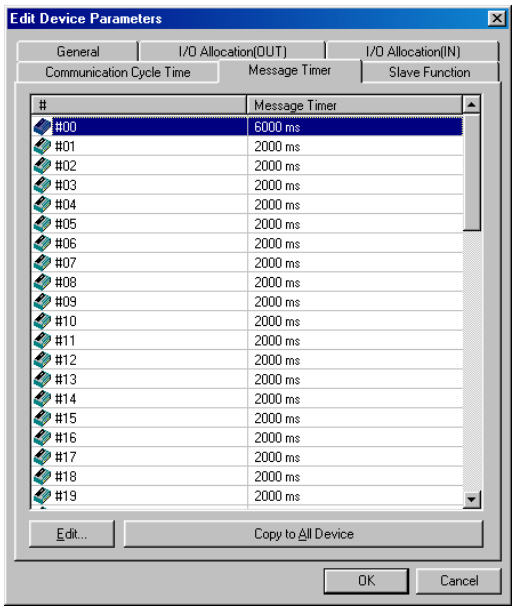


4. When sending explicit messages using the CMND instruction, set the response monitoring time to 6000 ms or longer.

**Using C200HX/HG/HE, or CVM1/CV-series DeviceNet Master Units**

When sending the explicit message IOWR instruction, set the response monitoring time to 6,000 ms. (The message timer cannot be set from the Configurator.)

## 6-2 Sending CompoWay/F Commands to a Temperature Controller

The master can send CompoWay/F command frames to the DeviceNet Communications Unit by embedding them in explicit message commands, and receive CompoWay/F response frames that are embedded in explicit messages responses.

When the DeviceNet Communications Unit receives the explicit message command, a CompoWay/F command frame is created by adding STX, ETX, and BCC to the command frame data, from the unit number to the FINS-mini command text, after which it is sent to the Temperature Controller. The Temperature Controller returns a CompoWay/F response.

When the DeviceNet Communications Unit receives the CompoWay/F response returned from the Temperature Controller, the STX, ETX, and BCC values are deleted, and then the data is converted to an explicit message response in either hexadecimal or ASCII format, before it is sent to the master. (The DeviceNet Communications Unit performs a BCC check.)

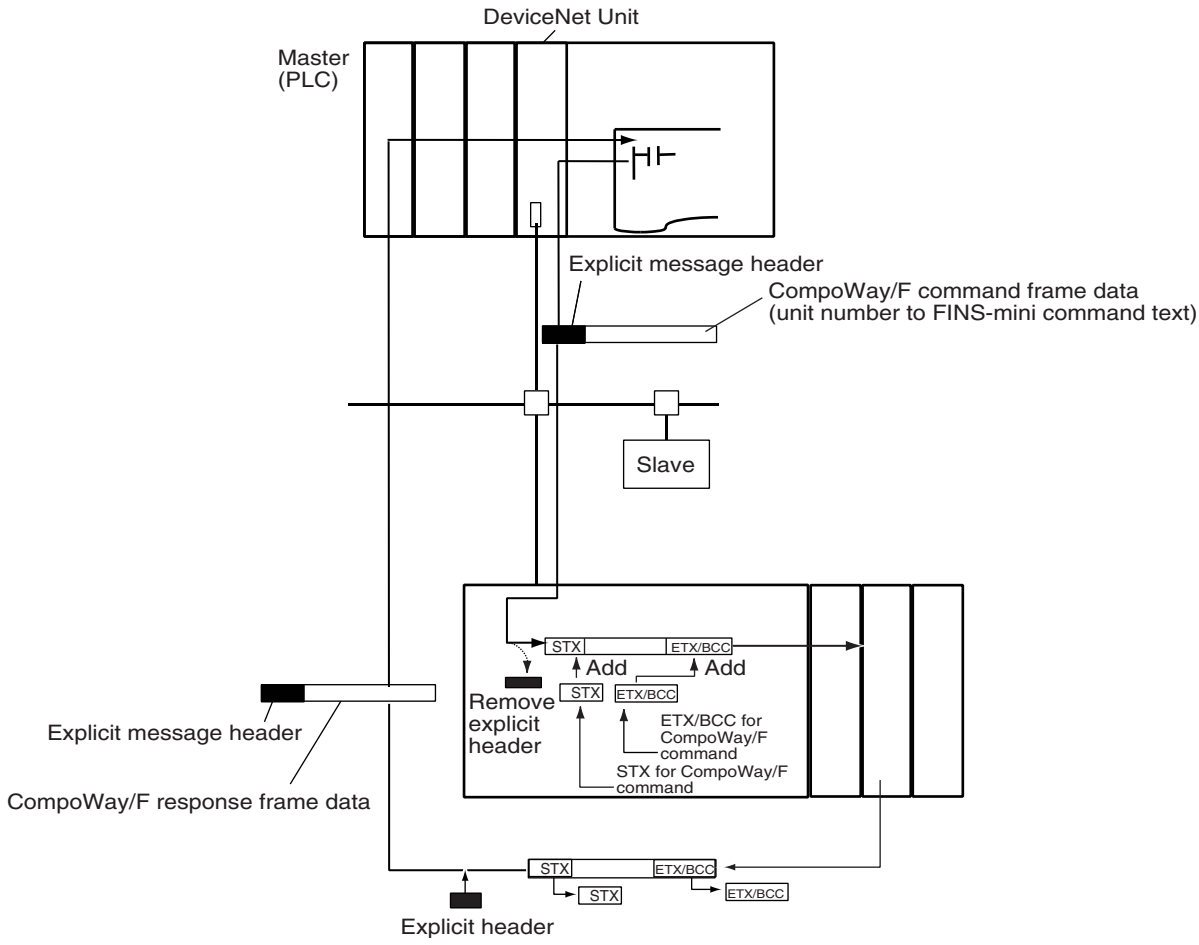


**Note** The CompoWay/F frames can be expressed in binary (hexadecimal) (CompoWay/F binary commands) or ASCII (CompoWay/F ASCII commands). Generally, CompoWay/F binary commands are used to minimize the number of operations. Always use CompoWay/F ASCII commands, however, when broadcasting or executing using a Read Controller Attribute (05 03).

The format of explicit messages used for CompoWay/F commands is explained here. For details on CompoWay/F frames, refer to the *E5ZN Temperature Controller Operation Manual* (H113).

## 6-2-1 CompoWay/F Binary Commands

CompoWay/F binary commands use hexadecimal values for the CompoWay/F frames, and not ASCII. Therefore, the data volume is about half of CompoWay/F ASCII commands. The following restrictions apply.

- Read Controller Attribute (05 03), which includes ASCII in the CompoWay/F frame, cannot be used.
- The “XX” used for the unit number when broadcasting is ASCII, and therefore cannot be specified.

The following command and response formats are used when executing CompoWay/F binary commands from an OMRON Master.

## Command Block

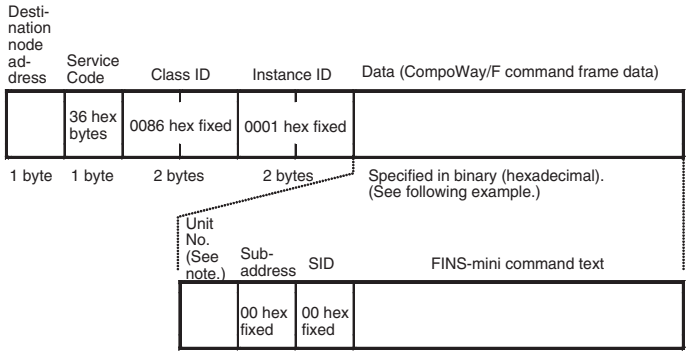


**Note** Broadcasting cannot be specified.

Example: Unit number = 01, FINS-mini command text = 01 01 C0 0000 00 0001 (Executes Read from Variable Area (01 01), to read one element for ch1 PV (C0 0000)

| Unit number | Sub-address | SID | FINS-mini command text | | | | | | | |
|---|---|---|---|---|---|---|---|---|---|---|
| 01 hex | 00 hex | 00 hex | 01 hex | 01 hex | C0 hex | 00 hex | 00 hex | 00 hex | 00 hex | 01 hex |

## Response Block

### Normal Response

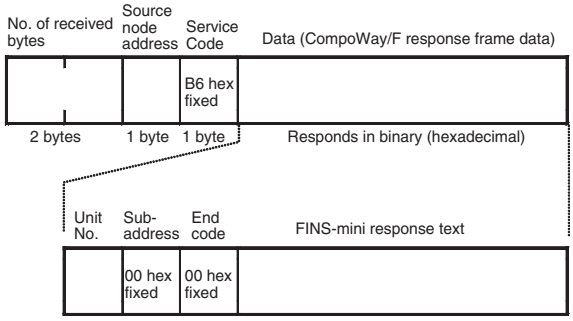


## 6-2-2 CompoWay/F ASCII Commands

When CompoWay/F ASCII commands are used, the CompoWay/F frames are expressed in ASCII (each digit in a specified numerical value is also converted to ASCII, so 52 is specified as 3532 in ASCII). When CompoWay/F ASCII commands are used, all CompoWay/F communications commands supported by Temperature Controllers can be used. (Read Controller Attribute (0503) and broadcasting can be specified.)

The following command and response formats are used when the commands are executed from an OMRON Master Unit.

## Command Block

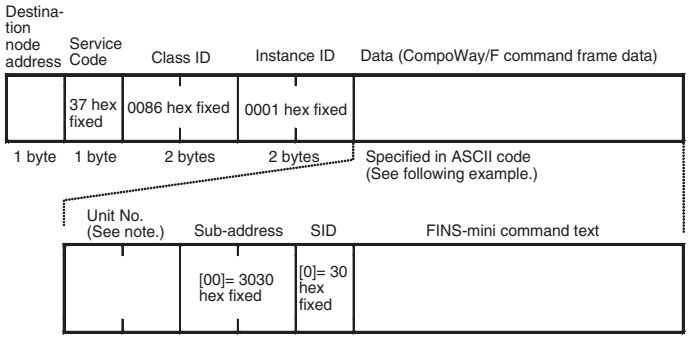


**Note** Note: For broadcasting, specify XX (58 hex 58 hex ASCII)

Example: Unit number = 01, FINS-mini command text = 01 01 C0 0000 00 0001 (Executes Read from Variable Area (01 01), to read one element for ch1 PV (C0 0000).)

| Unit No. | | Sub-address | | SID | | FINS-mini command text | | | | | |
|---|---|---|---|---|---|---|---|---|---|---|---|
| 30 hex | 31 hex | 30 hex | 30 hex | 30 hex | 30 hex | 30 hex | 31 hex | 30 hex | 31 hex | 43 hex | 30 hex |
| FINS-mini command text | | | | | | | | | | | |
| 30 hex | 30 hex | 30 hex | 30 hex | 30 hex | 30 hex | 30 hex | 30 hex | 30 hex | 31 hex | | |

## Response Block

### Normal Response

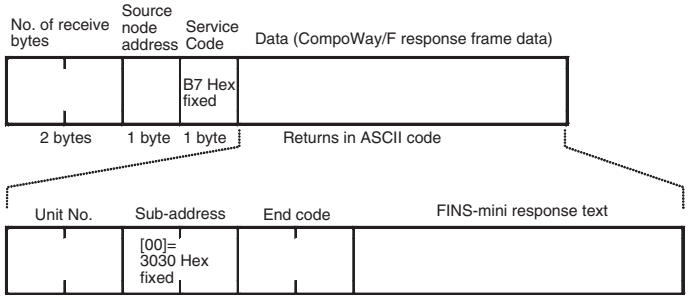


## 6-2-3 List of FINS-mini Commands

The following table lists the FINS-mini commands that can be sent to the Temperature Controllers. For details on commands and the variable area, refer to the *E5ZN Temperature Controller Operation Manual* (H113).

| MRC | SRC | Service name | Description | MRC, SRC notation | |
|---|---|---|---|---|---|
| | | | | CompoWay/F binary commands | CompoWay/F ASCII commands |
| 01 | 01 | Read from variable Area | Reads from the variable area. | 01 hex 01 hex | 30 hex 31 hex 30 hex 31 hex |
| 01 | 02 | Write to Variable Area | Writes to the variable area. | 01 hex 02 hex | 30 hex 31 hex 30 hex 32 hex |
| 01 | 04 | Read from Multiple Variable Area | Performs non-consecutive multiple reads from the variable area. | 01 hex 04 hex | 30 hex 31 hex 30 hex 34 hex |
| 01 | 13 | Write to Multiple Variable Area | Performs non-consecutive multiple writes to the variable area. | 01 hex 13 hex | 30 hex 31 hex 31 hex 33 hex |
| 05 | 03 | Read Controller Attribute (See note 1.) | Reads information, such as the model number. | Not used. | 30 hex 35 hex 30 hex 33 hex |

| MRC | SRC | Service name | Description | MRC, SRC notation | |
|---|---|---|---|---|---|
| | | | | CompoWay/F binary commands | CompoWay/F ASCII commands |
| 06 | 01 | Read Controller Status | Reads the operating status. | 06 hex 01 hex | 30 hex 36 hex 30 hex 31 hex |
| 08 | 01 | Echoback Test | Performs the echoback test. | 08 hex 01 hex | 30 hex 38 hex 30 hex 31 hex |
| 30 | 05 | Operation Commands | Performs RUN/STOP, AT Execute/Cancel, Move to Setting Area 1, etc. | 30 hex 05 hex | 33 hex 30 hex 30 hex 35 hex |

**Note**

1. Read Controller Attribute (05 03) cannot be executed using CompoWay/F binary commands. Use CompoWay/F ASCII commands to execute this service.
2. To write setting data to the variable area for initial settings (variable type C3) when using E5ZN Temperature Controllers (Write to Variable Area 01 02, variable type C3), first execute Move to Setting Area 1 (Operation Commands 30 05, command code 07).

# 6-3 Examples Using CompoWay/F Commands

The following example shows the FINS-mini commands, Write to Variable Area and Read from Variable Area, executed from a CS1W-DRM21 using CompoWay/F binary commands (embedded in explicit messages).

## Operation 1 (Writing SP)

- Writes the SP to E5ZN Temperature Controller unit number 0, ch1. (The SP written is 240.)
  FINS-mini command: Writes 000240 hex as SP data for ch1 with write start address = 0003 hex, MRC = 01 hex, SRC = 02 hex (Write to Variable Area), variable type = C1 hex, and write start address = 0003 hex.
- The data is written using the EXPLICIT MESSAGE SEND command (2801).
- The command data is written in words starting from D01000 in the CPU Unit's memory, and the response data is stored in DM words starting from D01200.
- If the command does not end normally, the end code is stored in D01106 and the send command is re-executed.

### Explicit Message Command

| Destination node address | Service code | Class ID | Instance ID | Unit No. | Sub-address | SID | FINS-mini command text | | | | | | |
|---|---|---|---|---|---|---|---|---|---|---|---|---|---|
| | | | | | | | MRC | SRC | Variable type | Address | Bit position | No. of elements | Write data |
| 00 hex | 36 hex | 0086 hex | 0001 hex | 00 hex | 00 hex | 00 hex | 01 hex | 02 hex | C1 hex | 0003 hex | 00 hex | 0001 hex | 000240 hex |

### Explicit Message Response

| No. of bytes received | Source node address | Service code | Unit No. | Sub-address | End code | FINS-mini command text | | |
|---|---|---|---|---|---|---|---|---|
| | | | | | | MRC | SRC | Response code |
| 09 hex | 00 hex | B6 hex | 00 hex | 00 hex | 00 hex | 01 hex | 02 hex | 00 hex |

**Command Details**

[CMND S D C]

| | | | |
|---|---|---|---|
| S | D01000+0: | 2801 hex | Command code |
| | +1: | 0036 hex | DeviceNet Communications Unit node address = 00<br>Service code = 36 hex |
| | +2: | 0086 hex | Class ID = 0086 hex |
| | +3: | 0001 hex | Instance ID = 01 hex |
| | +4: | 0000 hex | E5ZN unit number = 00 hex, sub-address (fixed) = 00 hex |
| | +5: | 0001 hex | SID (fixed) = 00 hex MRC = 01 Hex |
| | +6: | 02C1 hex | SRC = 02 hex, variable type = C1 hex |
| | +7: | 0003 hex | Write start address = 0003 hex (2 bytes) |
| | +8: | 0000 hex | Bit position (fixed) = 00 hex, No. of elements = 00 hex (2 bytes) |
| | +9: | 0100 hex | No. of elements = 01 hex, Data = 00 hex (4 bytes) |
| | +10: | 0002 hex | Data = 0002 hex |
| | +11: | 4000 hex | Data = 40 hex |
| D | D01200: | | First response storage word |
| C | D01100+0: | 0017 hex | No. of command data bytes |
| | +1: | 0010 hex | No. of response data bytes |
| | +2: | 0000 hex | Remote (destination) network address = 0 |
| | +3: | 3FFE hex | Remote (destination) node address = 3F hex<br>Remote (destination) Unit address = FE hex (10 hex also possible) |
| | +4: | 0000 hex | Response required, communications port No.0, No. of retries = 0 hex |
| | +5: | 0064 hex | Response monitoring time |

**Response (Operation1)**

| | | |
|---|---|---|
| D01200+0: | 2801 hex | Command code |
| +1: | 0000 hex | End code (FINS) |
| +2: | 0009 hex | No. of bytes received |
| +3: | 00B6 hex | Node address = 00 hex, Service code = B6 hex |
| +4: | 0000 hex | E5ZN unit number = 00 hex, Sub-address (fixed) = 00 hex |
| +5: | 0001 hex | End code (CompoWay/F) = 00 hex, MRC = 01 hex |
| +6: | 0200 hex | SRC = 02 hex, End code (FINS-mini) = 00 hex (2 bytes) |
| +7: | 0000 hex | End code (FINS-mini) = 00 hex |

## Program Example (Operation 1)

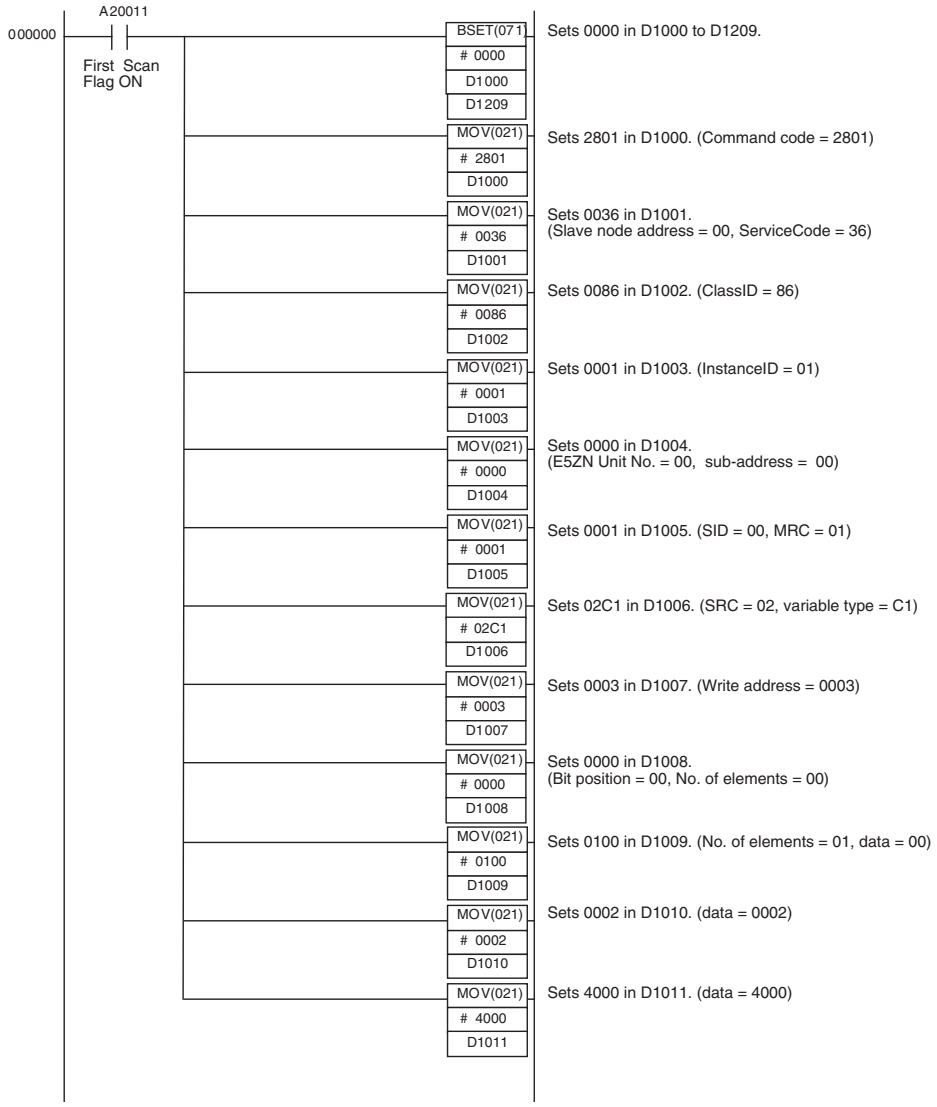

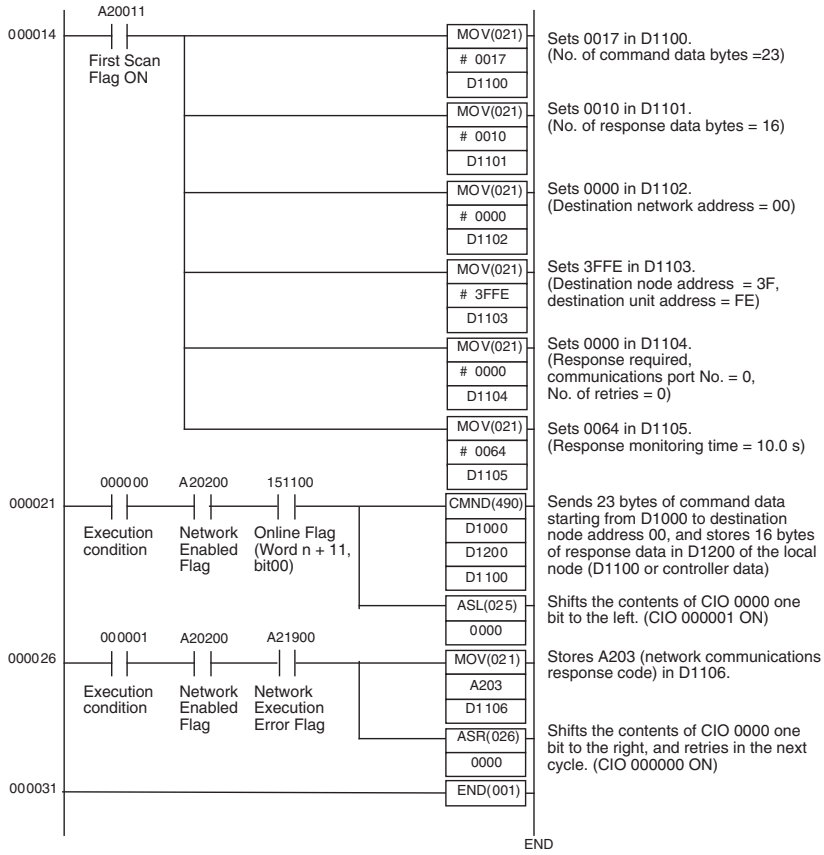


## Operation 2 (Reading PV)

- Reads the PV for E5ZN (Temperature Controller) unit number 0, ch1. FINS-mini command: Reads the PV of ch1. MRC = 01 hex, SRC = 01 hex (Read from Variable Area), variable type 00 hex, and read start address = 0000 hex.
- The data is read using the EXPLICIT MESSAGE SEND command (2801).
- The command data is written in DM words starting from D01020 in the CPU Unit's memory, and the response data is stored in DM words starting from D01220.
- If the command does not end normally, the end code is stored in D01126 and the send command is re-executed.

### Explicit Messages Command

| Destination node address | Service code | Class ID | Instance ID | Unit No. | Sub-address | SID | FINS-mini command text | | | | | |
|---|---|---|---|---|---|---|---|---|---|---|---|---|
| | | | | | | | MRC | SRC | Variable type | Address | Bit position | No. of elements |
| 00 hex | 36 hex | 0086 hex | 0001 hex | 00 hex | 00 hex | 00 hex | 01 hex | 01 hex | C0 hex | 0000 hex | 00 hex | 0001 hex |

### Explicit Messages Response

| No. of bytes received | Source node address | Service code | Unit No. | Sub-address | End code | FINS-mini command text | | | |
|---|---|---|---|---|---|---|---|---|---|
| | | | | | | MRC | SRC | Response code | Read data |
| 0D hex | 00 hex | B6 hex | 00 hex | 00 hex | 01 hex | 01 hex | 01 hex | 00 hex | (Example) 240<br>000240 hex |

**Command Details (Operation 2)**

[CMND S D C]

| | | | |
|---|---|---|---|
| S | D01020+0: | 2801 hex | Command code |
| | +1: | 0036 hex | DeviceNet Communications Unit node address = 00 hex |
| | | | Service code = 36 hex |
| | +2: | 0086 hex | Class ID = 0086 hex |
| | +3: | 0001 hex | Instance ID = 01 hex |
| | +4: | 0000 hex | E5ZN unit number = 00 hex, sub-address (fixed) = 00 hex |
| | +5: | 0001 hex | SID (fixed) = 00 hex, MRC = 01He x |
| | +6: | 01C0 hex | SRC = 01 hex, variable type = C0 hex |
| | +7: | 0003 hex | Read address = 0000 hex (2 bytes) |
| | +8: | 0000 hex | Bit position (fixed) = 00 hex, No. of elements = 00 hex (2 bytes) |
| | +9: | 0100 hex | No. of elements = 01 hex |
| D | D01220: | | First response storage word |
| C | D01120+0: | 0013 hex | No. of command data bytes |
| | +1: | 0013 hex | No. of response data bytes |
| | +2: | 0000 hex | Remote (destination) network address = 0 |
| | +3: | 3FFE hex | Remote (destination) node address = 3F hex |
| | | | Remote (destination) Unit address FE hex (10 hex is also possible) |
| | +4: | 0000 hex | Response required, communications port No. = 0, No. of retries = 0 hex |
| | +5: | 0064 hex | Response monitoring time |

**Response Details (Operation 2)**

| | | |
|---|---|---|
| D01220+0: | 2801 hex | Command code |
| +1: | 0000 hex | End code (FINS) |
| +2: | 000D hex | No. of bytes received |
| +3: | 00B6 hex | Node address = 00 hex, service code = B6 hex |
| +4: | 0000 hex | E5ZN unit number = 00 hex, sub-address (fixed) = 00 hex |
| +5: | 0001 hex | End code (CompoWay/F), MRC = 01 hex |
| +6: | 0100 hex | SRC = 01 hex, end code (FINS-mini) = 00 hex (2 bytes) |
| +7: | 0000 hex | End code (FINS-mini) = 00 hex, read data = 00 hex (4 bytes) |
| +8: | 0002 hex | Read data = 0002 hex |
| +9: | 4000 hex | Read data = 40 hex (rightmost 00 hex is ignored) |

### Program Example (Operation 2)

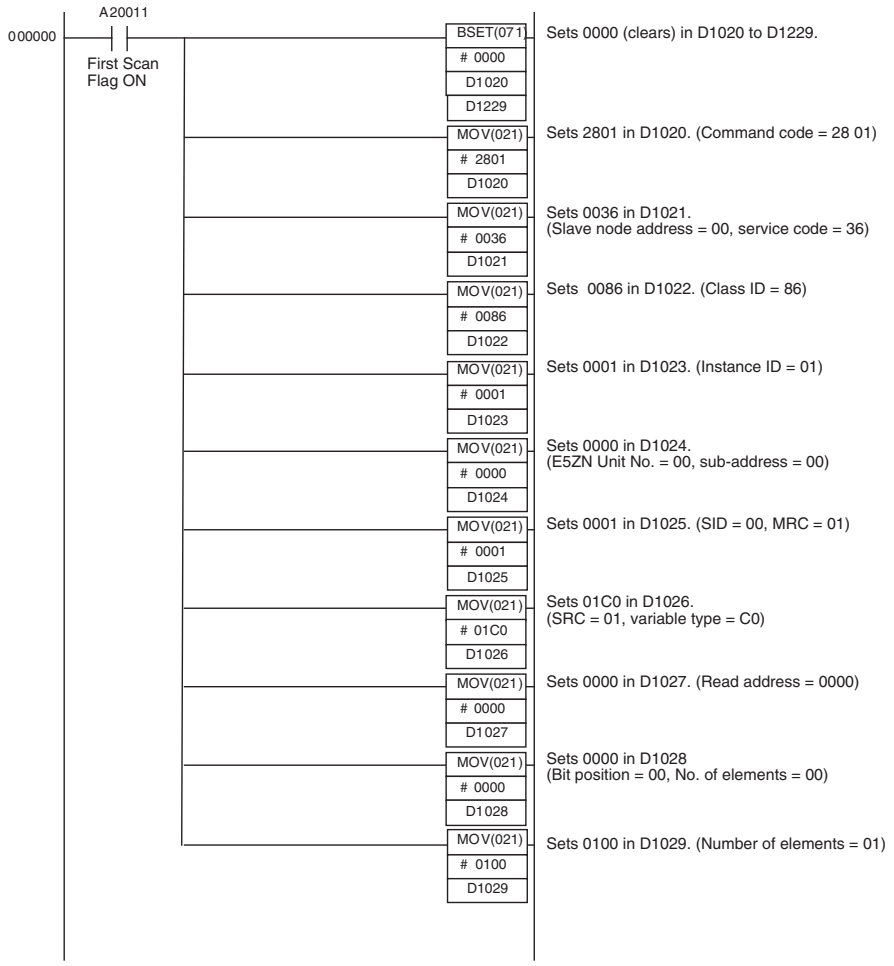

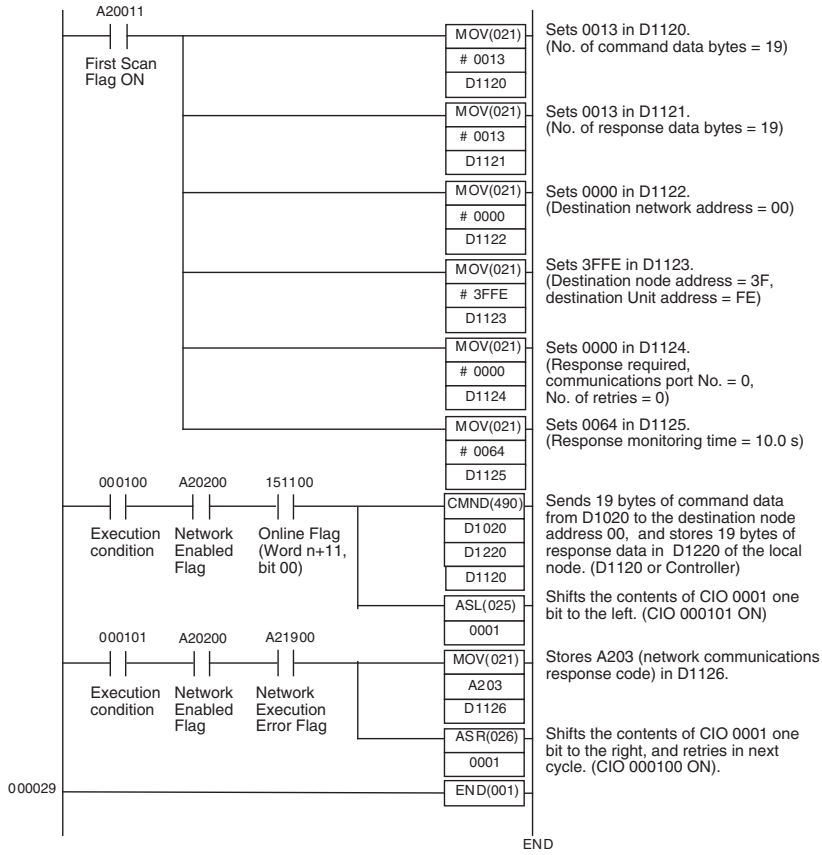


# 6-4 Example of Sending Explicit Messages

The following example shows when an explicit message is sent to the DeviceNet Communications Unit from a CS1W-DRM21 Master Unit to read general status information for the DeviceNet Communications Unit.

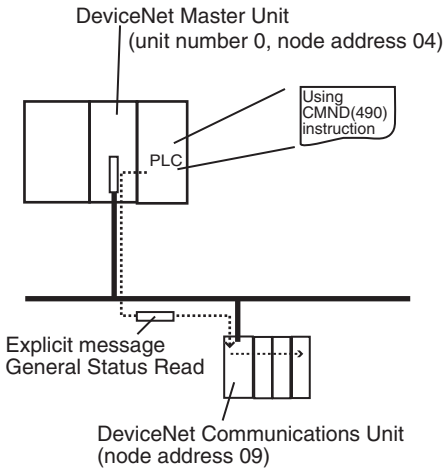


## Operation

- Reads the Unit status of the DeviceNet Communications Unit.
- Status information is read using the EXPLICIT MESSAGE SEND command (28 01).
- The information for the read results is as follows:
  Temperature Controller Power Voltage Status Flag (bit 00) = 1 (Power

ON), Communications Power Voltage Monitor Error Flag (bit 01) = 0 (normal), Unit Maintenance Flag (bit 03) = 0 (within range), Temperature Controller Maintenance Flag (bit 07) = 0 (within range).

**Explicit Message Command**

| Destination node address | Service code | Class ID | Instance ID | Attribute ID |
|---|---|---|---|---|
| 09 hex | 0E hex | 0095 hex | 0001 hex | 65 hex |

**Explicit Message Response**

| No. of bytes received | Source node address | Service code | Data |
|---|---|---|---|
| 03 hex | 09 hex | 0E hex | 01 hex |

- The command data is written in DM words starting from D01000 in the CPU Unit memory, and the response data is stored in DM words starting from D02000.
- If the command does not end normally, the end code is stored in DM words D00006, and the send command is re-executed.

## Command Details

[CMND S D C]

| | | | |
|---|---|---|---|
| S | D01000+0: | 2801 hex | Command code |
| | +1: | 090E hex | DeviceNet Communications Unit node address<br>Service code = 0E hex |
| | +2: | 0095 hex | Class ID = 0095 hex |
| | +3: | 0001 hex | Instance ID = 0001 hex |
| | +4: | 6500 hex | Attribute ID = 65 hex |
| D | D02000: | | First response storage word |
| C | D00000+0: | 0007 hex | No. of command data bytes |
| | +1: | 0004 hex | No. of response data bytes |
| | +2: | 0001 hex | Remote (destination) network address = 1 |
| | +3: | 04FE hex | Remote (destination) node address = 4<br>Remote (destination) Unit address = FE hex (10 hex is also possible) |
| | +4: | 0000 hex | Response required, communications port No. = 0,No. of retries = 0 hex |
| | +5: | 003C hex | Response monitoring time = 6 s |

## Response

| | | |
|---|---|---|
| D02000+0: | 2801 hex | Command code |
| +1: | 0000 hex | End code (FINS) |
| +2: | 0002 hex | No. of bytes received |
| +3: | 098E hex | Node address = 09 hex, service code = 8E hex |
| +4: | 0100 hex | Node address = 01 hex (rightmost 00 hex is ignored) |

# 6-5 Sending Explicit Messages

The following list shows explicit messages that can be sent to the DeviceNet Communications Unit. These messages are used to read and write maintenance information (such as Unit conduction time or total RUN time) for the DeviceNet Communications Unit and Temperature Controllers.

For details on sending explicit messages from an OMRON Master PLC, refer to the corresponding DeviceNet Master Unit operation manual.

**Note** The number of digits used for Class ID, Instance ID, and Attribute ID depends on the master used. When sending parameters from an OMRON Master Unit, the values are expressed as follows:

Class ID: 4-digit (2-byte) hexadecimal
Instance ID: 4-digit (2-byte) hexadecimal
Attribute ID: 2-digit (1-byte) hexadecimal

## 6-5-1 Reading General Status

| Explicit message | Read /write | Function | Command | | | | | Response |
|---|---|---|---|---|---|---|---|---|
| | | | Service code | Class ID | Instance ID | Attribute ID | Data size | |
| General Status Read | Read | Reads the Unit status bits of the DeviceNet Communications Unit (8 bits). (Refer to page 57). | 0E hex | 95 hex | 01 hex | 65 hex | --- | 1 byte |

## 6-5-2 Setting and Monitoring the Unit Conduction Time

| Explicit message | Read /write | Function | Command | | | | | Response |
|---|---|---|---|---|---|---|---|---|
| | | | Service code | Class ID | Instance ID | Attribute ID | Data size | |
| Unit Maintenance Set Value | Read | Reads the set value (monitor value) for the DeviceNet Communications Unit conduction time (unit: 0.1 h). | 0E hex | 95 hex | 01 hex | 73 hex | --- | 4 bytes 00000000 to FFFFFFFF hex (0 to 4294967295) |
| | Write | Writes the set value (monitor value) for the DeviceNet Communications Unit conduction time (unit: 0.1 h). | 10 hex | 95 hex | 01 hex | 73 hex | 4 bytes 00000000 to FFFFFFFF hex (0 to 4294967295) | |
| Unit Maintenance Present Value | Read | Reads the PV for the DeviceNet Communications Unit conduction time (unit: 0.1 h). | 0E hex | 95 hex | 01 hex | 71 hex | | 4 bytes 00000000 to FFFFFFFF hex (0 to 4294967295 |
| Unit Maintenance Bit | Read | Reads the monitor status of the Communications Unit conduction time. | 0E hex | 95 hex | 01 hex | 72 hex | | 1 byte<br>00 hex: Within range<br>01 hex: Out of range (monitor value exceeded) |

## 6-5-3 Writing Maintenance Mode Information

| Explicit message | Read /write | Function | Command | | | | | Response |
|---|---|---|---|---|---|---|---|---|
| | | | Service code | Class ID | Instance ID | Attribute ID | Data size | |
| Maintenance Counter Save | Save | Records the maintenance counter (PV of total ON/RUN time for all Temperature Controllers) in the DeviceNet Communications Unit's memory. | 16 hex | 95 hex | 01 hex | 75 hex | --- | --- |

## 6-5-4 Setting and Monitoring Temperature Controller Channels

| Explicit message | Read /write | Function | Command | | | | | Response |
|---|---|---|---|---|---|---|---|---|
| | | | Service code | Class ID | Instance ID | Attribute ID | Data size | |
| Temperature Controller Channel Maintenance Information Monitor Mode | Read | Reads the monitor mode for maintenance information of the Temperature Controller unit number and channel (see note 1) specified by the Instance ID (1 to 32). | 0E hex | 7A hex | 01 to 20 hex | 65 hex | | 1 byte<br>00 hex: Unit conduction time mode<br>01 hex: Total RUN time mode |
| | Write | Writes the monitor mode for maintenance information of the Temperature Controller unit number and channel (see note 1) specified by the Instance ID (1 to 32). | 10 hex | 7A hex | 01 to 20 hex | 65 hex | 1 byte<br>00 hex: Unit conduction time mode<br>01 hex: Total RUN time mode | |
| Set Value for Unit Conduction Time or Total RUN Time | Read | Reads the set value (monitor value) for the Unit conduction time or total RUN time (unit: s) of the Temperature Controller unit number and channel (see note 1) specified by the Instance ID (1 to 32). | 0E hex | 7A hex | 01 to 20 hex | 68 hex | | 4 bytes<br>00000000 to FFFFFFFF hex (0 to 4294967295) |
| | Write | Writes the set value (monitor value) for the Unit conduction time or total RUN time (unit: s) of the Temperature Controller unit number and channel (see note 1) specified by the Instance ID (1 to 32). | 10 hex | 7A hex | 01 to 20 hex | 68 hex | 4 bytes<br>00000000 to FFFFFFFF hex (0 to 4294967295) | |
| Unit Conduction Time or Total RUN Time Read | Read | Reads the PV for the Unit conduction time or total RUN time (unit: s) of the Temperature Controller unit number and channel (see note 1) specified by the Instance ID (1 to 32). | 0E hex | 7A hex | 01 to 20 hex | 66 hex | | 4 bytes<br>00000000 to FFFFFFFF hex (0 to 4294967295) |
| Monitor Status of Unit Conduction Time or Total RUN Time Read | Read | Reads the monitor status for the Unit conduction time or total RUN time (unit: s) of the Temperature Controller unit number and channel (see note 1) specified by the Instance ID (1 to 32). | 0E hex | 7A hex | 01 to 20 hex | 67 hex | | 1 byte<br>00 hex: Within range<br>01 hex: Out of range (monitor value exceeded) |

**Note** The following table shows the relationship between the Instance IDs (01 to 31) and the Temperature Controller unit numbers (0 to 15) and channels (1 and 2).

| Instance ID | Unit No., channel | Instance ID | Unit No., channel |
|---|---|---|---|
| 01 (01 hex) | Unit 0, ch1 | 02 (02 hex) | Unit 0, ch2 |
| 03 (03 hex) | Unit 1, ch1 | 04 (04 hex) | Unit 1, ch2 |
| 05 (05 hex) | Unit 2, ch1 | 06 (06 hex) | Unit 2, ch2 |
| 07 (07 hex) | Unit 3, ch1 | 08 (08 hex) | Unit 3, ch2 |
| 09 (09 hex) | Unit 4, ch1 | 10 (0A hex) | Unit 4, ch2 |
| 11 (0B hex) | Unit 5, ch1 | 12 (0C hex) | Unit 5, ch2 |
| 13 (0D hex) | Unit 6, ch1 | 14 (0E hex) | Unit 6, ch2 |
| 15 (0F hex) | Unit 7, ch1 | 16 (10 hex) | Unit 7, ch2 |
| 17 (11 hex) | Unit 8, ch1 | 18 (12 hex) | Unit 8, ch2 |
| 19 (13 hex) | Unit 9, ch1 | 20 (14 hex) | Unit 9, ch2 |
| 21 (15 hex) | Unit 10, ch1 | 22 (16 hex) | Unit 10, ch2 |
| 23 (17 hex) | Unit 11, ch1 | 24 (18 hex) | Unit 11, ch2 |
| 25 (19 hex) | Unit 12, ch1 | 26 (1A hex) | Unit 12, ch2 |
| 27 (1B hex) | Unit 13, ch1 | 28 (1C hex) | Unit 13, ch2 |
| 29 (1D hex) | Unit 14, ch1 | 30 (1E hex) | Unit 14, ch2 |
| 31 (1F hex) | Unit 15, ch1 | 32 (20 hex) | Unit 15, ch2 |

# SECTION 7
# Communications Performance

This section provides information on the time required for a complete communications cycle, for an output response to be made to an input, to start the system, and to send messages.


7-1 Remote I/O Communications Characteristics . . . . . 110
7-1-1 I/O Response Time . . . . . 110
7-1-2 CompoWay/F Communications Cycle Time and Refresh Time . . . 115
7-1-3 More than One Master in Network . . . . . 117
7-1-4 System Startup Time . . . . . 118
7-2 Message Communications Characteristics . . . . . 118
7-2-1 Message Communications Time . . . . . 118

# 7-1 Remote I/O Communications Characteristics

This section describes the characteristics of DeviceNet remote I/O communications when OMRON Master and Slave Units are being used. Use this section for reference when planning operations that require precise I/O timing.

The equations provided here are valid under the following conditions:

- The Master Unit is operating with the scan list enabled.
- All of the required slaves are participating in communications.
- No errors are being indicated at the Master Unit.
- Messages are not being produced in the Network (from another company's configurator, for example).

**Note** The values provided by these equations may not be accurate if another company's master or slave is being used in the Network.

## 7-1-1 I/O Response Time

The I/O response time is the time it takes from the reception of an input signal at an Input Slave to the output of the corresponding output signal at an Output Slave after being processed by the ladder program at the master.

### CVM1- and CV-series PLCs (Asynchronous Mode)

**Minimum I/O Response Time**

The minimum I/O response time occurs when the DeviceNet Master Unit refreshing is executed just after the input signal is received by the master and instruction execution is completed within one peripheral servicing cycle.

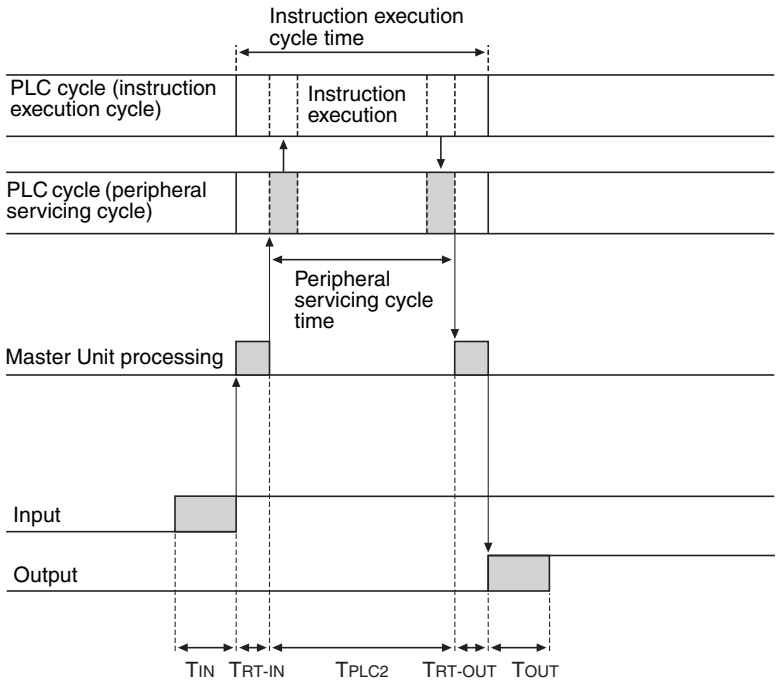


$T_{IN}$: The Input Slave's ON (OFF) delay (Minimum value: 0)

$T_{OUT}$: The Output Slave's ON (OFF) delay (Minimum value: 0)

$T_{RT\text{-}IN}$: The Input Slave's communications time/slave

$T_{RT\text{-}OUT}$: The Output Slave's communications time/slave

$T_{PLC2}$: The PLC's peripheral servicing cycle time

**Note** Refer to the information on each slave for details on Input and Output Slaves' ON and OFF delay times. Refer to *7-1-2 CompoWay/F Communications Cycle Time and Refresh Time* and the Operation Manual for the PLC being used for details on the PLC's peripheral servicing cycle time.

The minimum I/O response time ($T_{MIN}$) is the total of the following terms:

$T_{MIN} = T_{IN} + T_{RT\text{-}IN} + T_{PLC2} + T_{RT\text{-}OUT} + T_{OUT}$

**Maximum I/O Response Time**

The maximum I/O response time occurs with the I/O timing shown in the following diagram.

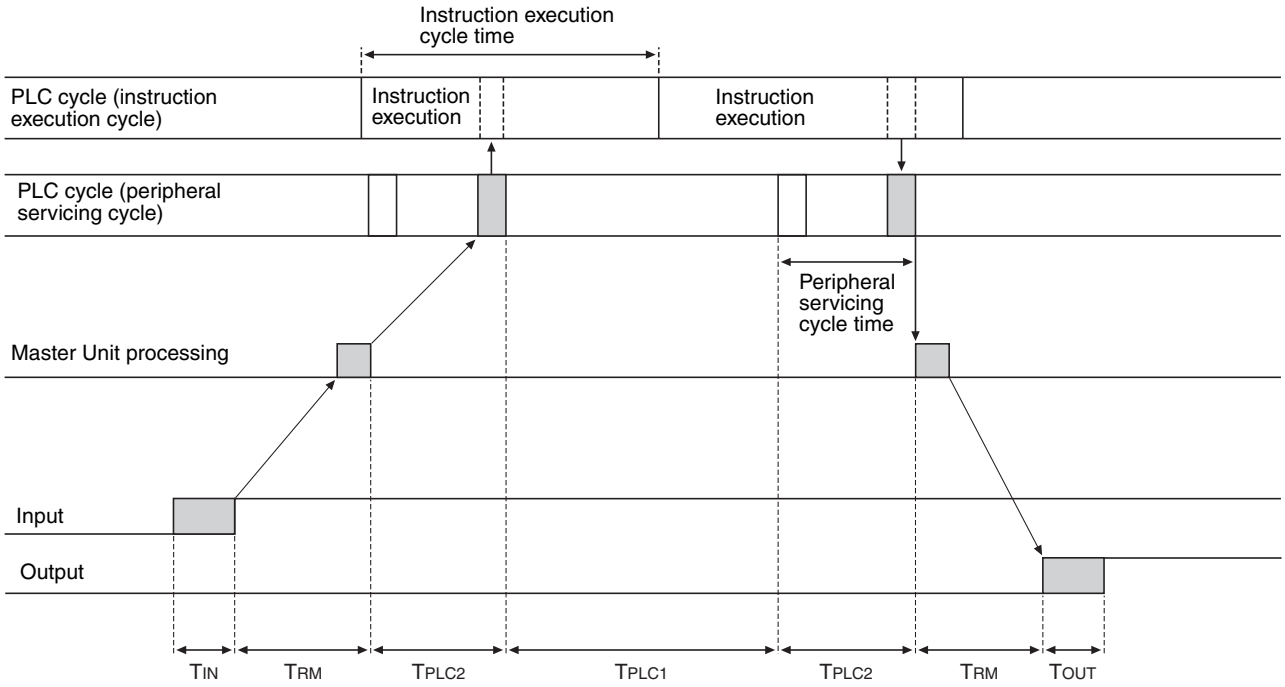


$T_{IN}$: The Input Slave's ON (OFF) delay

$T_{OUT}$: The Output Slave's ON (OFF) delay

$T_{RM}$: The whole Network's communications cycle time (Refer to page 115.)

$T_{PLC1}$: The PLC's instruction execution cycle time

$T_{PLC2}$: The PLC's peripheral servicing cycle time

**Note** Refer to the information on each slave for details on Input and Output Slaves' ON and OFF delay times. Refer to *7-1-2 CompoWay/F Communications Cycle Time and Refresh Time* and the Operation Manual for the PLC being used for details on the PLC's peripheral servicing cycle time.

The maximum I/O response time ($T_{MAX}$) is the total of the following terms:

$T_{MAX} = T_{IN} + 2 \times T_{RM} + T_{PLC1} + 2 \times T_{PLC2} + T_{OUT}$

## CVM1- and CV-series PLCs (Synchronous Mode)

**Minimum I/O Response Time**

The minimum I/O response time occurs with the I/O timing shown in the following diagram.

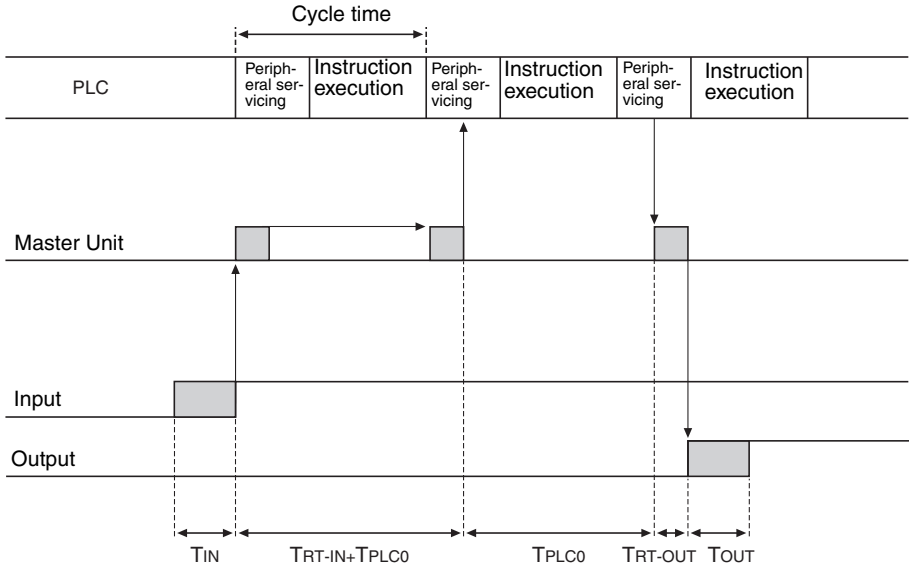


$T_{IN}$: The Input Slave's ON (OFF) delay (Minimum value: 0)

$T_{OUT}$: The Output Slave's ON (OFF) delay (Minimum value: 0)

$T_{RT\text{-}IN}$: The Input Slave's communications time/slave

$T_{RT\text{-}OUT}$: The Output Slave's communications time/slave

$T_{PLC0}$: The PLC's cycle time (instruction execution + peripheral servicing)

**Note** Refer to the information on each slave in *SECTION 5* to *SECTION 7* for details on Input and Output Slaves' ON and OFF delay times. Refer to *7-1-2 CompoWay/F Communications Cycle Time and Refresh Time* and the Operation Manual for the PLC being used for details on the PLC's cycle time.

The minimum I/O response time ($T_{MIN}$) is the total of the following terms:

$$T_{MIN} = T_{IN} + T_{RT\text{-}IN} + 2 \times T_{PLC0} + T_{RT\text{-}OUT} + T_{OUT}$$

**Maximum I/O Response Time**

The maximum I/O response time occurs with the I/O timing shown in the following diagram.

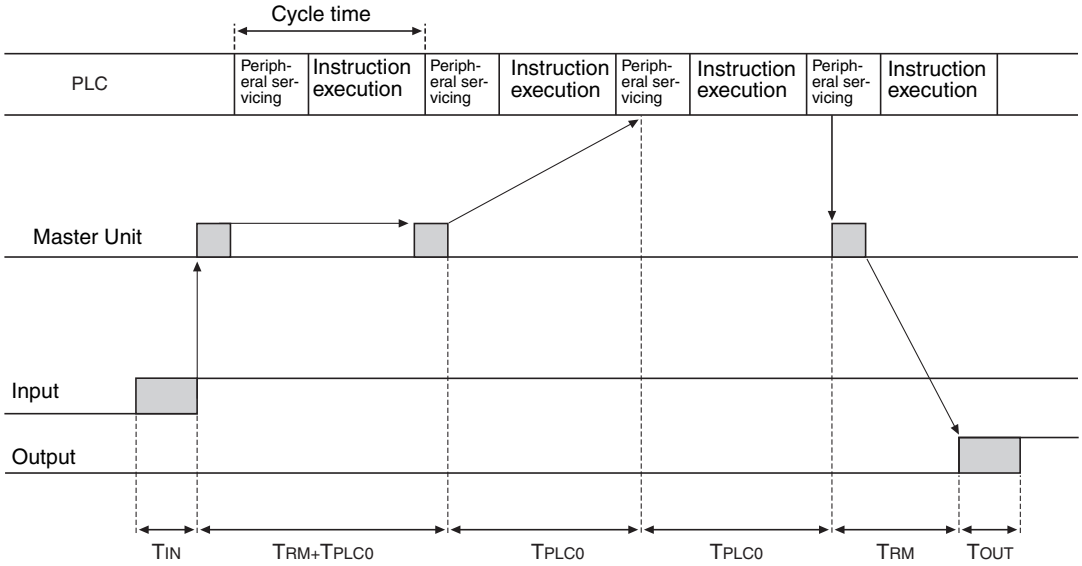


$T_{IN}$: The Input Slave's ON (OFF) delay

$T_{OUT}$: The Output Slave's ON (OFF) delay

$T_{RM}$: The whole Network's communications cycle time (Refer to page 115)

$T_{PLC0}$: The PLC's cycle time (instruction execution + peripheral servicing)

**Note** Refer to the information on each slave for details on Input and Output Slaves' ON and OFF delay times. Refer to *7-1-2 CompoWay/F Communications Cycle Time and Refresh Time* and the Operation Manual for the PLC being used for details on the PLC's instruction execution and peripheral servicing cycle times.

The maximum I/O response time ($T_{MAX}$) is the total of the following terms:

$$T_{MAX} = T_{IN} + 2 \times T_{RM} + 3 \times T_{PLC0} + T_{OUT}$$

## CS, CJ, C200HX/HG/HE (-Z), and C200HS PLCs

**Minimum I/O Response Time**

The minimum I/O response time occurs when the DeviceNet Slave I/O refreshing is executed just after the input signal is received by the master and I/O is refreshed for the slave first in the next I/O refresh cycle.

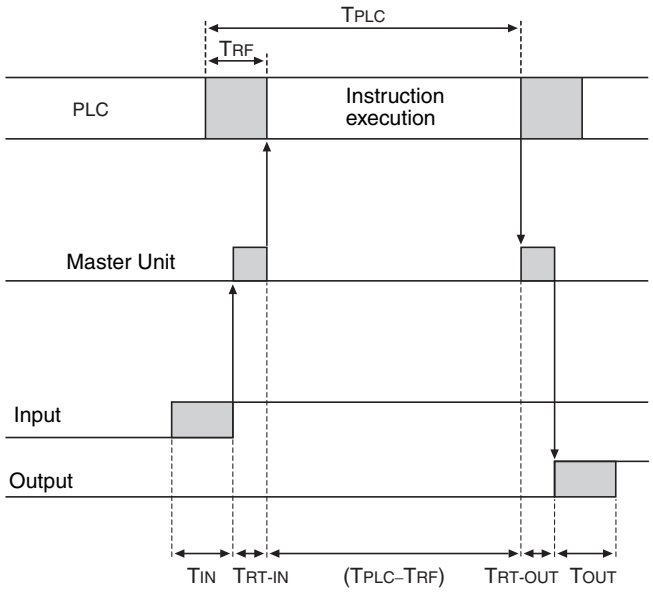


$T_{IN}$: The Input Slave's ON (OFF) delay (Minimum value: 0)

$T_{OUT}$: The Output Slave's ON (OFF) delay (Minimum value: 0)

$T_{RT\text{-}IN}$: The Input Slave's communications time/slave

$T_{RT\text{-}OUT}$: The Output Slave's communications time/slave

$T_{PLC}$: The PLC's cycle time

$T_{RF}$: The PLC's DeviceNet Unit refresh time

**Note** Refer to the information on each slave for details on Input and Output Slaves' ON and OFF delay times. Refer to *7-1-2 CompoWay/F Communications Cycle Time and Refresh Time* and the Operation Manual for the PLC being used for details on the PLC's cycle time.

The minimum I/O response time ($T_{MIN}$) is the total of the following terms:

$$T_{MIN} = T_{IN} + T_{RT\text{-}IN} + (T_{PLC} - T_{RF}) + T_{RT\text{-}OUT} + T_{OUT}$$

**Maximum I/O Response Time**

The maximum I/O response time occurs with the I/O timing shown in the following diagram.

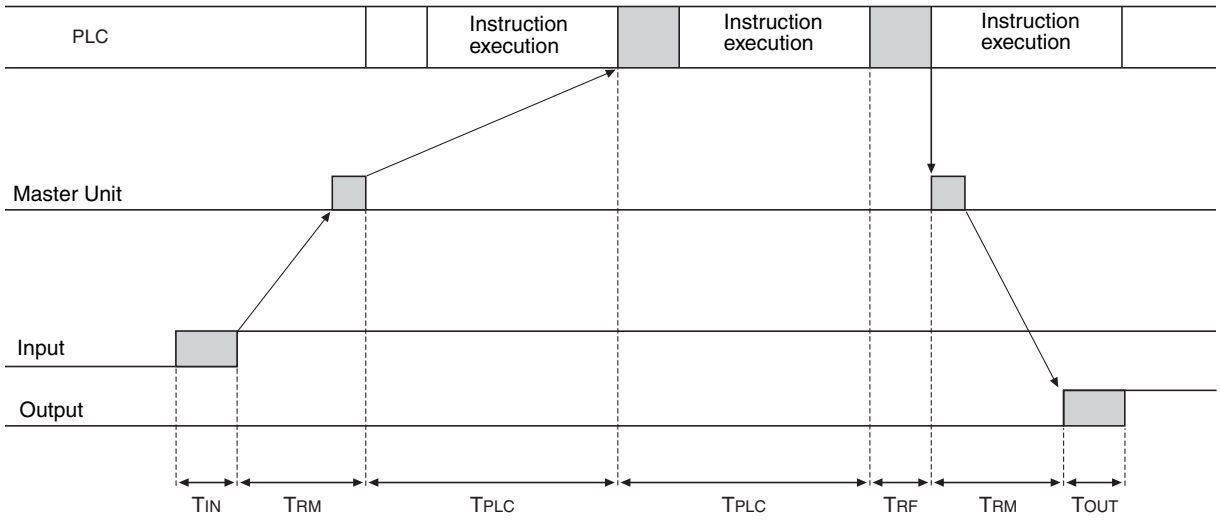


$T_{IN}$: The Input Slave's ON (OFF) delay

$T_{OUT}$: The Output Slave's ON (OFF) delay

$T_{RM}$: The whole Network's communications cycle time

$T_{PLC}$: The PLC's cycle time

$T_{RF}$: The PLC's DeviceNet Unit refresh time

**Note** Refer to the information on each slave for details on Input and Output Slaves' ON and OFF delay times. Refer to *7-1-2 CompoWay/F Communications Cycle Time and Refresh Time* and the Operation Manual for the PLC being used for details on the PLC's cycle time.

The maximum I/O response time ($T_{MAX}$) is the total of the following terms:

$T_{MAX} = T_{IN} + 2 \times T_{RM} + 2 \times T_{PLC} + T_{RF} + T_{OUT}$

## 7-1-2 CompoWay/F Communications Cycle Time and Refresh Time

The communications cycle time, communications time for each slave, and refresh time are explained in this section. All of these times are necessary for calculating the time required for various processes in a DeviceNet Network.

### Communications Cycle Time

The communications cycle time is the time from the completion of a slave's I/O communications processing until I/O communications with the same slave are processed again. The communications cycle time of the DeviceNet Communications Unit is the maximum CompoWay/F communications cycle time $T_{IN} + T_{OUT}$.

The equations used to calculate the CompoWay/F communications cycle time are described here.

**Communications Cycle Time Equations**

Total communications cycle time = IN communications cycle time + OUT communications cycle time.

■ **IN Communications Cycle Time**

IN communications cycle time = (18 ms × Σ α) + (6 ms × total allocated words in IN Area 1 and 2)

α indicates the number of commands for a single Temperature Controller.

$\alpha$ = (No. of allocated IN Area words for a Temperature Controller + 2) ÷ 5

Example: Temperature Controller Unit 1 = 5 IN Area words, Unit 2 = 3 IN Area words, Unit 3 = 2 IN Area words, yielding a total of 10 IN Area words. ($\Sigma\alpha$ = (5 + 2) ÷ 5 + (3 + 2) ÷ 5 + (2 + 2) ÷ 5 = 4)

IN communications cycle time = 18 ms × Σ α + 6 × 10
= 18 × 4 + 6 × 10
= 122 ms

**Note** When IN Area words are not allocated for a Temperature Controller, $\alpha$ = 1. Decimal points are truncated, but if there was a remainder, the value of $\alpha$ is the quotient + 1.

■ **OUT Communications Cycle Time**

OUT communications cycle time = (19 ms × Σ β) + (7 ms × total allocated words in OUT Area 1)

(The cycle time is 0 when the Output Enable Bits are OFF.)

$\beta$ = (Number of allocated OUT Area words for a single Temperature Controller) ÷ 3

Example: Temperature Controller Unit 1 = 5 OUT Area words, Unit 2 = 4 OUT Area words, Unit 3 = 1 OUT Area words, yielding a total of 10 OUT Area words. (Σ β = 5 ÷ 3 + 4 ÷ 3 + 1 ÷ 3 = 5)

OUT communications cycle time = 19 ms × Σ β + 7 × 10
= 19 × 5 + 7 × 10
= 165 ms

**Note** Decimal points are truncated, but if there was a remainder, the value of $\beta$ is the quotient + 1.

**Maximum Processing Time for CompoWay/F Commands Sent to the Temperature Controller**

The processing time depends on the command, but the maximum processing time for commands with slow response times is 370 ms.

## Refresh Time

The refresh time is the time required for I/O data to be exchanged between the PLC's CPU Unit and the DeviceNet Master Unit. The PLC's cycle time is increased when a Master Unit is mounted, as shown below.

**Note** Refer to the PLC's Operation Manual for more details on the refresh time and the PLC's cycle time.

**Master Unit for CV-series PLCs**

The PLC's cycle time (CPU Bus Unit servicing) is increased by the amount shown in the following table when a Master Unit is mounted to the PLC.

| Process | Processing time |
|---|---|
| CPU Bus Unit servicing | DeviceNet Unit refreshing: 1.1 ms |

**Master Unit for CS/CJ-series, C200HX/HG/HE (-Z), and C200HS PLCs**

The PLC's cycle time (I/O refreshing) is increased by the amount shown in the following table when a Master Unit is mounted to the PLC.

| Process | Processing time |
|---|---|
| I/O refreshing | DeviceNet Unit I/O refreshing:<br>Using Master Unit for CS/CJ-series, and C200HX/HG/HE (-Z) PLCs<br>1.72 + 0.022 × number of words (ms) (See note.)<br>Using Master Unit for C200HS PLCs<br>2.27 + 0.077 × number of words (ms) (See note.) |

**Note** The number of words refreshed is the total number of words in the I/O Area that are allocated to the slaves, including any unused words between those words actually used by the slaves.
For example, if there are only two Input Slaves with node addresses 1 and 5, the 5 input words for nodes 1 through 5 would be refreshed even though the input words for nodes 2, 3, and 4 are unused.
If message communications are being performed, just add the number of words used in message communications to the above number of words for whenever messages are being processed.

## 7-1-3 More than One Master in Network

The following equation shows the communications cycle time ($T_{RM}$) when there is more than one master in the Network.

An example for two Master Units is shown here.

First, the Network is divided into two groups: Master A and the slaves in remote I/O communications with it, and Master B and the slaves in remote I/O communications with it.

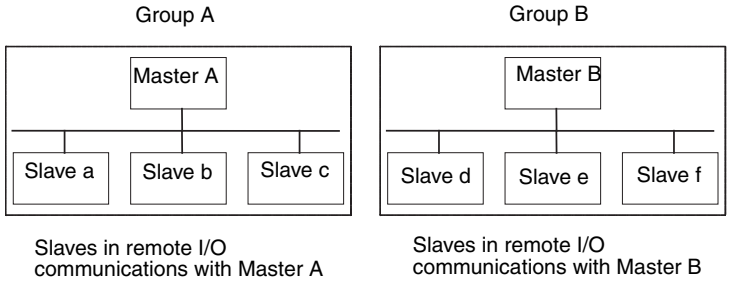


**Note** Although in the above diagram the slaves are separated into two separate groups for each master for convenience, the actual physical positions of the slaves in the Network are irrelevant.

Next, refer to *7-1-2 CompoWay/F Communications Cycle Time and Refresh Time* and calculate the communications cycle time for each group as if they were separate Networks.

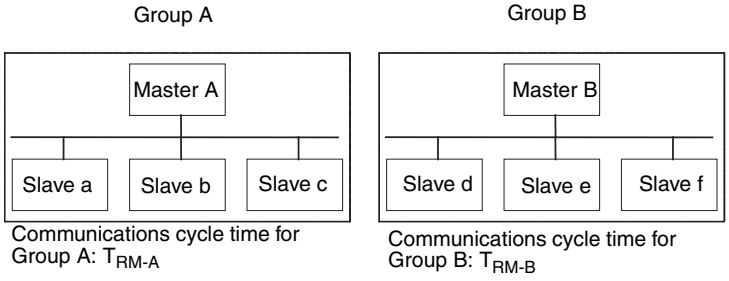


In Networks with two masters, the communications cycle time for the entire Network will be the sum of the communications cycle times for both groups.

$$T_{RM} = T_{RM-A} + T_{RM-B}$$

Although this example shows only two masters in the Network, the total communications cycle time for any Network with more than one master can be calculated by dividing it into groups performing remote I/O communications and adding the communications cycle times of all the groups.

### 7-1-4 System Startup Time

This section describes the system startup time for a Network, assuming that the scan list is enabled and that remote I/O communications are set to start automatically at startup. The system startup time is the delay from the time that the Master Unit is turned ON or restarted until the time remote I/O communications begin.

The system startup time when the Master Unit is set to start up immediately after power supplies of all the slaves' are turned ON is different from when the Master Unit is restarted while communications are in progress. The startup times are shown in the following table.

| Condition | Slave's indicator status | System startup time |
|---|---|---|
| The master is started immediately after slave startup. | NS indicator is OFF or flashing green. | 6 s |
| The master only is restarted. | NS indicator is flashing red while the master is OFF. | 8 s |
| The slaves only are restarted. | - | 10 s |

**Program Example**

As shown in the preceding table, it takes time for DeviceNet communications to start up. This programming uses flags in the Master Status Area to prevent the slaves' I/O processing from being performed until the Master Unit and remote I/O communications have started up.

**Note** Refer to the operation manual of the Master Unit being used for details on the Master Unit Status Area.

The following program example is for a CS-series PLC and a Master Unit with a unit number of 00.

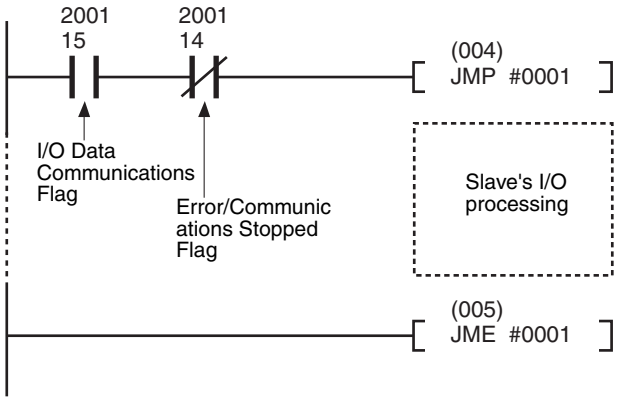


## 7-2 Message Communications Characteristics

### 7-2-1 Message Communications Time

The message communications time is the time required from the time a Master Unit starts to send a message over the Network to another node until the Master Unit completes sending the message (SEND/RECV instructions to send/receive data and CMND/IOWR instructions to execute FINS commands).

**Note** If the CPU Unit attempts to send another message or receives a message from another node before the message communications time has finished, the

response message being sent or the message being received from another node may be destroyed. Always perform message communications at intervals longer than the message communications time and use message instructions (SEND, RECV, CMND, and IOWR). Never send messages to any one node at intervals less than the message communications time.
If send or receive messages are destroyed, the error record will be placed in the error history of the Master Unit. If an error occurs, read the error history using the FINS command or monitor the error history from the Configurator.

The following equation can be used to calculate the approximate message communications time.

Message communications time = Communications cycle time × ((No. of message bytes + 15) ÷ 6 + 1)

The number of message bytes is the number of data bytes following the FINS command code. The communications cycle time depends on whether remote I/O communications are being used.

### Message Communications Only (Remote I/O Communications Not Used)

Message communications time = 2 (see note) + 0.11 × $T_B$ + 0.6 (ms)

$T_B$: Baud rate (500 kbps: $T_B$ = 2; 250 kbps: $T_B$ = 4; 125 kbps: $T_B$ = 8)

**Note** The communications cycle when remote I/O communications are not being used is 2 ms.

### Message Communications with Remote I/O Communications

Communications cycle time = (Communications cycle time for remote I/O communications only) + 0.11 × $T_B$ + 0.6 (ms)

$T_B$: Baud rate (500 kbps: $T_B$ = 2; 250 kbps: $T_B$ = 4; 125 kbps: $T_B$ = 8)

**Note** The above equations can be used to find the approximate message communications time, but not the maximum time. The message communications time will depend on the frequency of the message communications, the load on the remote node, the communications cycle time, and other factors. For any one Master Unit, the message communications time may be greatly increased due to heavy loads.

# SECTION 8
# Troubleshooting and Maintenance

This section describes error processing, periodic maintenance operations, and troubleshooting procedures needed to keep the DeviceNet Network operating properly. Details on resetting replaced Units are also provided. Read through the error processing procedures in both this manual and the operation manual for the DeviceNet master being used before operation so that operating errors can be identified and corrected more quickly.


8-1 Indicators and Error Processing . . . . . 122
8-2 Maintenance . . . . . 124
8-2-1 Cleaning . . . . . 124
8-2-2 Inspection . . . . . 124
8-2-3 Replacing Units . . . . . 125

# 8-1 Indicators and Error Processing

The following table lists the indicator status when errors occur, the probable causes and processing.

| Indicator status | Probable cause | Remedy |
|---|---|---|
| MS: OFF<br>NS: OFF | The power is not being supplied to the Unit. | Supply communications power from the DeviceNet Communications connector. |
| | The power voltage is not within the permitted range. | Use a power supply voltage within the permitted range. |
| | The Unit is faulty. | Replace the Unit. |
| MS: Flashing green<br>NS: No change | The Temperature Controller connection configuration is not registered. | Use the Configurator to register or download the Temperature Controller connection configuration (refer to page 44). Alternatively, turn ON pin 1 of the rear panel DIP switch, and set the highest unit number of the connected Temperature Controllers on the rear panel rotary switch. |
| MS: Flashing red<br>NS: No change | A sum error has occurred in the parameters registered in EEPROM. | Use the Configurator's device monitor to check the parameters with the sum error or logic error, and reset the parameters using the Configurator. |
| | A logic error has occurred in the parameters registered in EEPROM. | |
| | A EEPROM hardware error has occurred. | Replace the Unit. |
| MS: ON red<br>NS: OFF | The Unit is faulty | Replace the Unit. |
| MS: ON green<br>NS: Flashing green | Waiting to connect to DeviceNet communications. | Check the following items and restart the Unit.<br>• Are lengths of cables (trunk and branch lines) correct?<br>• Are cables short-circuited, broken, or loose?<br>• Are cables wired correctly?<br>• Is terminating resistance connected to both ends of the trunk line only?<br>• Is noise interference excessive?<br>• Is the power to the master ON? |
| | The Unit is faulty. | Replace the Unit. |
| MS: ON green<br>NS: ON red | The DeviceNet is in Bus Off status. | Check the following items and restart the Unit.<br>• Are lengths of cables (trunk and branch lines) correct?<br>• Are cables short-circuited, broken, or loose?<br>• Is terminating resistance connected to both ends of the trunk line only?<br>• Is noise interference excessive? |
| | Node addresses duplicated. | Reset node addresses correctly. |
| | The Unit is faulty. | Replace the Unit. |

| Indicator status | Probable cause | Remedy |
|---|---|---|
| MS: ON green<br>NS: Flashing red | A communications time-out has occurred. | Check the following items and restart the Unit.<br>• Are lengths of cables (trunk and branch lines) correct?<br>• Are cables short-circuited, broken, or loose?<br>• Is terminating resistance connected to both ends of the trunk line only?<br>• Is noise interference excessive? |
| | The Unit is faulty. | Replace the Unit. |
| TS: OFF | Communications with the Temperature Controllers have stopped. | Set the Temperature Controller connection configuration. |
| | The Unit is faulty. | Replace the Unit. |
| TS: Flashing red | One or more of the connected Temperature Controllers is faulty. | Replace the faulty Temperature Controllers. Check the communications status and communications error status to detect which Temperature Controller is faulty. |
| | One or more of the connected Temperature Controllers has been disconnected. | Connect the Temperature Controllers correctly. Check the communications status and communications error status to detect which Temperature Controller is disconnected. |
| | The unit number of one or more Temperature Controllers registered in the connection configuration is incorrect. | Change the unit number of the Temperature Controller or register the connection configuration correctly. |
| | Pin 1 of the rear panel DIP switch is set incorrectly. | Set correctly as follows:<br>Pin 1: ON (Set from rotary switch.)<br>Pin 1: OFF (Set from Configurator.) |
| | Power is not being supplied to the Terminal Unit. | Supply 24-VDC power to terminals 19 and 20 of the leftmost Terminal Unit. |
| | The Unit is faulty. | Replace the Unit. |
| TS: Flashing red<br>(Flashes for 10 s only.) | A communications error occurred with the Temperature Controller when copy was executed. | • Check whether the Terminal Unit connections are loose.<br>• When the configuration consists of multiple blocks, check the RS-485 communications cables. |
| | The settings downloaded for a Temperature Controller configuration that is different from that used when uploading. | Use the same Temperature Controller configuration for downloading that was used when uploading. |

# 8-2 Maintenance

This section describes the routine cleaning and inspection recommended as regular maintenance. Handling methods when replacing Units are also explained here.

## 8-2-1 Cleaning

Clean the DeviceNet Units regularly as described below in order to keep the Network in its optimal operating condition.

- Wipe the Unit with a dry, soft cloth for regular cleaning.
- When dust or dirt cannot be removed with a dry cloth, dampen the cloth with a neutral cleanser (2%), wring out the cloth, and wipe the Unit.
- Smudges may remain on the Unit from gum, vinyl, or tape that was left on for a long time. Remove these smudges when cleaning.

**Note** Never use volatile solvents, such as paint thinner or benzene, or chemical wipes to clean the Unit. These substances may damage the surface of the Unit.

## 8-2-2 Inspection

Inspect the system periodically to keep it in its optimal operating condition.

In general, inspect the system once every 6 to 12 months, but inspect more frequently if the system is used in high-temperature, humid, or dusty conditions.

### Inspection Equipment

Prepare the following equipment before inspecting the system.

**Equipment Required for Regular Inspection**

A flat-blade and a Phillips screwdriver, a screwdriver for connecting communications connectors, a tester (or a digital voltmeter), industrial alcohol, and a clean cloth are required for routine inspection.

**Other Equipment that May Be Required**

A synchroscope, oscilloscope, thermometer, or hygrometer may be required.

### Inspection Procedure

Check the items in the following table and correct any condition that is below standard by adjusting the Unit or improving the environmental conditions.

| Inspection item | Details | Standard | Equipment |
|---|---|---|---|
| Environmental conditions | Are ambient and cabinet temperatures correct? | –10 to +55°C | Thermometer |
| | Are ambient and cabinet humidity correct? | 25% to 85% | Hygrometer |
| | Has dust or dirt accumulated? | No dust or dirt | Visual inspection |
| Installation conditions | Are the Units installed securely? | No looseness | Phillips screwdriver |
| | Are the connectors of the communications cables fully inserted? | No looseness | Phillips screwdriver |
| | Are the external wiring screws tight? | No looseness | Phillips screwdriver |
| | Are the connecting cables undamaged? | No external damage | Visual inspection |

## 8-2-3 Replacing Units

The Network consists of the DeviceNet Master Unit and Slave Units. The entire network is affected when a Unit is faulty, so a faulty Unit must be repaired or replaced quickly. We recommend having spare Units available to restore Network operation as quickly as possible.

### Precautions

Observe the following precautions when replacing a faulty Unit.

- After replacement make sure that there are no errors with the new Unit.
- When a Unit is being returned for repair, attach a sheet of paper detailing the problem and return the Unit to your OMRON dealer
- If there is a faulty contact, try wiping the contact with a clean, lint-free cloth dampened with alcohol.

**Note** Before replacing a Unit, always stop Network communications and turn OFF the power to all the nodes in the Network.

### Settings after Replacing a Unit

After replacing a Unit, set the new Unit's switches to the same settings that were on the old Unit. Connect the same model of DeviceNet Communications Unit to the Temperature Controllers as the previous Unit.

**Note**

1. By backing up the settings of the DeviceNet Communications Unit and the Temperature Controllers, the settings can be reset in a batch. For details on the device parameters upload and download functions, refer to the *DeviceNet Configurator Ver. 2□ Operation Manual* (W382).
2. When replacing a Temperature Controller, the DeviceNet Communications Unit copy mode can be used to easily reset the Temperature Controller on-site without requiring the Configurator. For details, refer to *Reading/Writing Temperature Controller Settings Using Copy Mode* below.

### Reading/Writing Temperature Controller Settings Using Copy Mode

The DeviceNet Communications Unit has a copy function that can read or write the setting parameters of all the Temperature Controllers connected to the Unit in a batch (the read setting parameters are recorded in the DeviceNet Communications Unit).

When a Temperature Controller has been replaced, the copy function allows the Temperature Controller to be easily reset onsite without using a Configurator. The copy function can read or write the following setting parameters of the Temperature Controllers.

| Temperature Controller Variable Area | Address | |
|---|---|---|
| | Analog Output Models | Analog Output Models |
| C1 | 0000 to 0019, 0100 to 0119 | 0000 to 0019, 0100 to 0119 |
| | | Not including 000C to 010C |
| C3 | 0000 to 002E, 0100 to 012E | 0000 to 003E, 0100 to 013E |
| | | Not including 0022 to 0024, 0122 to 0124 |

**Note**

1. Use the E5ZN-SDL Setting Display Unit to back up data when other areas require setting.
2. If the system using the DeviceNet Communications Unit starts up normally, use the copy function to read the Temperature Controller setting parameters at the same time as saving the device parameters with the Configurator.

3. Pulse output models refer to the E5ZN-2Q□H03□-FLK voltage output type, and the E5ZN-2T□H03□-FLK transistor output type. Analog output models refer to the E5ZN-2C□H03□-FLK current output types.

**Read Setting Parameters (Upload)**

Use this function to upload the setting parameters from the Temperature Controllers to the DeviceNet Communications Unit.

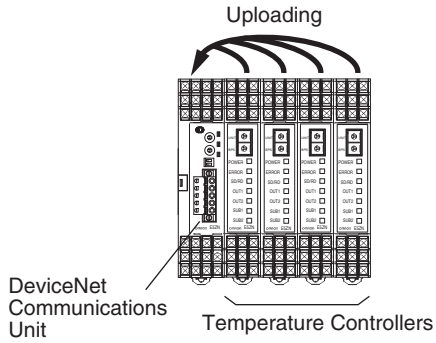


■ **Execution Condition**

There can be no communications error (TS indicator is not flashing red).

■ **Procedure**

***1,2,3...***

1. Turn OFF pin 2 (upload) of the DIP switch on the front of the DeviceNet Communications Unit.
2. Toggle pin 1 of the of the DIP switch on the front of the DeviceNet Communications Unit from OFF to ON (leave ON for 1 to 5 seconds) and then turn OFF again (while pin 1 is ON, the TS indicator will be lit green). The data will start uploading and the TS indicator will flash green.

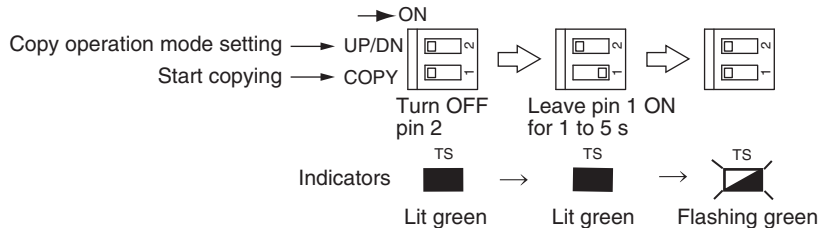


■ **Execution Results**

- If the uploading completes normally, the TS indicator status will return to be lit green.
- If the upload operation ends abnormally, after error completion, the TS indicator will flash red for 10 seconds.

**Note**

1. For the upload operation, when pin 1 (copy) is turned ON, and then OFF again, the TS indicator will flash green. Check that the TS indicator is flashing green during the upload operation.
2. To cancel an upload operation, leave pin 1 (copy) ON for at least 5 seconds, and then turn OFF again.

**Write Setting Parameters (Download)**

Use this function to download the setting parameters from the DeviceNet Communications Unit to the Temperature Controllers.

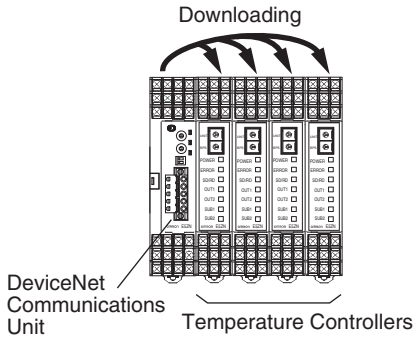


**Note**

1. While downloading, refresh processing of I/O data will stop, and the data immediately before being copied will be held in the IN Area of the DeviceNet Communications Unit. Explicit message communications will stop, so a timeout error may occur.
2. After downloading has been completed, a software reset will be implemented for the Temperature Controller. Even if the Temperature Controller is in RUN mode, the Controller will stop after downloading when the following conditions are met.
   - The RUN/STOP Bit in the OUT Area for the channel is ON.
   - The Output Enable Bit in the OUT Area for the channel is OFF.

■ **Execution Condition**

- Data for the same connection configuration (model, unit number) has been uploaded to the DeviceNet Communications Unit.
- There can be no communications error (TS indicator is not flashing red).

■ **Procedure**

***1,2,3...***

1. Turn ON pin 2 (download) of the DIP switch on the front of the DeviceNet Communications Unit.
2. Toggle pin 1 of the of the DIP switch on the front of the DeviceNet Communications Unit from OFF to ON (leave ON for 1 to 5 seconds) and then turn OFF again (while pin 1 is ON, the TS indicator will be flashing green). The data will start downloading and the TS indicator will flash green.

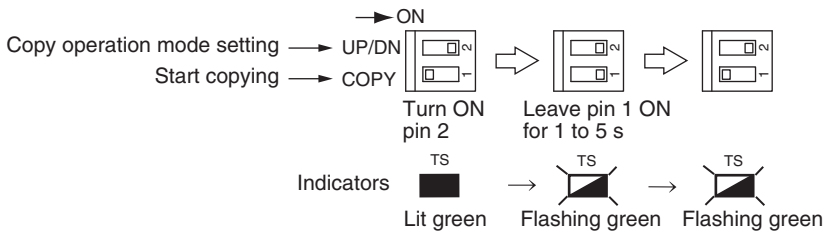


■ **Execution Results**

- When the download completes normally, the TS indicator status returns to be lit green.
- When the download operation ends abnormally, after error completion, the TS indicator will flash red for 10 s.

**Note**

1. For the download operation, when pin 1 (copy) is turned ON, the TS indicator will flash green (indicating download standby). Check that the TS indicator is flashing green before turning OFF pin 1 (copy) again.

2. To cancel a download operation, leave pin 1 (copy) ON for at least 5 seconds, and then turn OFF again.
3. Check that data is downloading by confirming that the TS indicator flashes green after pin 1 (copy) is turned OFF.

# Appendix A
## Connecting to a Master from Another Company

This appendix explains how to operate the DeviceNet Communications Unit when it is connected to a master manufactured by another company. The DeviceNet Communications Unit supports either simple I/O allocation using the rear panel switch, or I/O allocations using the OMRON Configurator. The DeviceNet Communications Unit is not provided with an EDS file, so simple I/O allocation must be used if another company's configurator is used.

## Data Size and Connection Types

The DeviceNet Communications Unit supports both simple I/O allocation and I/O allocations set from the Configurator when the Unit is connected to another company's master, but the data size of the IN and OUT Areas of the DeviceNet Communications Unit must be set. The size of the DeviceNet Communications Unit's data areas will depend on the setting method used. For details, refer to *SECTION 4 Remote I/O Communications.*

If the connection type can be set when another company's configurator is being used, select a connection supported by the DeviceNet Communications Unit.

The following table shows the connection types and data sizes for OMRON DeviceNet Communications Units.

| Model | | Supported connections | | | | Data size (bytes) | |
|---|---|---|---|---|---|---|---|
| | | Poll | Bit strobe | Change of state (COS) | Cyclic | IN | OUT |
| DeviceNet Communications Unit | E5ZN-DRT | Yes | No | Yes | Yes | 1 to 200 (See note.) | 1 to 200 (See note.) |

**Note** The size of the IN/OUT Areas depends on the setting.

DeviceNet I/O communications support the following types of connections.

| Connection type | Details | Remarks |
|---|---|---|
| Poll | Used to exchange data between the master and individual slaves by sending and receiving commands and responses. (Output data is allocated for commands and input data is allocated for responses). | --- |
| Bit strobe | Used to broadcast commands from the master and receive input responses from multiple slaves. | By using one command only, the communications cycle time is short, but bit strobe connections can be used only with slaves with 8 or less input points. |
| Change of state (COS) | Normally, input and output data are sent by master and slaves at regular cycles, but with a COS connection, data is sent to the master or slave when the master or slave data changes. | By setting a long cycle interval, the Network will not be loaded with communications for minor data changes, thereby improving the overall efficiency of the Network. |
| Cyclic | Masters and slaves send output or input data at regular cycles. | |

# More Detailed DeviceNet Specifications

The following device profiles contain more detailed DeviceNet specifications for the DeviceNet Communications Unit if more information needs to be registered in the scan list.

## Device Profiles

| | | | |
|---|---|---|---|
| General data | Compatible DeviceNet Specifications | Volume I - Release 1.3<br>Volume II - Release 1.3 | |
| | Vendor name | OMRON Corporation | Vendor ID = 47 |
| | Device profile name | Slaves: Communications Adapter | Profile number = 12 |
| | Manufacturer catalog number | H119 | |
| | Manufacturer revision | 1.01 | |
| Physical conformance data | Network current consumption | 80 mA max. | |
| | Connector type | Open plug | |
| | Physical layer insulation | No | |
| | Supported indicators | Module, Network | |
| | MAC ID setting | Rotary switch | |
| | Default MAC ID | 0 | |
| | Baud rate setting | None (automatic recognition) | |
| | Supported baud rates | 125 kbps, 250 kbps, and 500 kbps | |
| Communications data | Predefined Master/Slave connection set | Group 2 only server | |
| | Dynamic connection support (UCMM) | No | |
| | Explicit message fragmentation support | Yes | |

# Object Mounting

## Identity Object (0x01)

| | | |
|---|---|---|
| **Object class** | **Attribute** | Not supported |
| | **Service** | Not supported |

| | | | | | | |
|---|---|---|---|---|---|---|
| **Object instance** | **Attribute** | **ID** | **Contents** | **Get (read)** | **Set (write)** | **Value** |
| | | 1 | Vendor | Yes | No | 47 |
| | | 2 | Device type | Yes | No | 12 |
| | | 3 | Product code | Yes | No | 315 |
| | | 4 | Revision | Yes | No | 1.1 |
| | | 5 | Status (bits supported) | Yes | No | Bit 00 only |
| | | 6 | Serial number | Yes | No | Unique for each Unit |
| | | 7 | Product name | Yes | No | E5ZN-DRT |
| | | 8 | State | No | No | |
| | **Service** | **DeviceNet service** | | **Parameter option** | | |
| | | 05 | Reset | No | | |
| | | 0E | Get_Attribute_Single | No | | |

## Message Router Object (0x02)

| | | |
|---|---|---|
| **Object class** | **Attribute** | Not supported |
| | **Service** | Not supported |
| **Object instance** | **Attribute** | Not supported |
| | **Service** | Not supported |
| **Vendor specification addition** | | None |

## DeviceNet Object (0x03)

| | | |
|---|---|---|
| **Object class** | **Attribute** | Not supported |
| | **Service** | Not supported |

| | | | | | | |
|---|---|---|---|---|---|---|
| **Object instance** | **Attribute** | **ID** | **Contents** | **Get (read)** | **Set (write)** | **Value** |
| | | 1 | MAC ID | Yes | No | |
| | | 2 | Baud rate | Yes | No | |
| | | 3 | BOI | Yes | No | 00 (hexadecimal) |
| | | 4 | Bus Off counter | No | No | |
| | | 5 | Allocation information | Yes | No | |
| | | 6 | MAC ID switch changed | No | No | |
| | | 7 | Baud rate switch changed | No | No | |
| | | 8 | MAC ID switch value | No | No | |
| | | 9 | Baud rate switch value | No | No | |
| | **Service** | **DeviceNet service** | | **Parameter option** | | |
| | | 0E | Get_Attribute_Single | None | | |
| | | 4B | Allocate_Master/ Slave_Connection_Set | None | | |
| | | 4C | Release_Master/ Slave_Connection_Set | None | | |

## Assembly Object (0x04)

| | | |
|---|---|---|
| **Object class** | **Attribute** | Not supported |
| | **Service** | Not supported |

| | | | | | | |
|---|---|---|---|---|---|---|
| **Object instance** | **Attribute** | **ID** | **Contents** | **Get (read)** | **Set (write)** | **Value** |
| **100: IN Area 1** | | 1 | Number of members in list | No | No | |
| **101: IN Area 2** | | 2 | Member list | No | No | |
| **110: OUT Area 1** | | 3 | Data | Yes | No | |
| | **Service** | **DeviceNet service** | | **Parameter option** | | |
| | | 0E | Get_Attribute_Single | None | | |

## Connection Object (0x05)

| | | |
|---|---|---|
| **Object class** | **Attribute** | Not supported |
| | **Service** | Not supported |
| | **Maximum number of active connections** | 1 |

| | | | | | | |
|---|---|---|---|---|---|---|
| **Object instance 1** | **Section** | **Information** | | **Maximum number of instances** | | |
| | **Instance type** | Explicit Message | | 1 | | |
| | **Production trigger** | Cyclic | | | | |
| | **Transport type** | Server | | | | |
| | **Transport class** | 3 | | | | |
| | **Attribute** | **ID** | **Contents** | **Get (read)** | **Set (write)** | **Value** |
| | | 1 | State | Yes | No | |
| | | 2 | Instance type | Yes | No | 00 (hexadecimal) |
| | | 3 | Transport class trigger | Yes | No | 83 (hexadecimal) |
| | | 4 | Produced connection ID | Yes | No | |
| | | 5 | Consumed connection ID | Yes | No | |
| | | 6 | Initial comm. characteris-tics | Yes | No | 21 (hexadecimal) |
| | | 7 | Produced connection size | Yes | No | 0176 (hexadecimal) |
| | | 8 | Consumed connection size | Yes | Yes | |
| | | 9 | Expected packet rate | Yes | No | 01 (hexadecimal) |
| | | 12 | Watchdog time-out action | Yes | No | 00 (hexadecimal) |
| | | 13 | Produced connection path length | Yes | No | 00 (hexadecimal) |
| | | 14 | Produced connection path | Yes | No | |
| | | 15 | Consumed connection path | Yes | No | 00 (hexadecimal) |
| | **Service** | **DeviceNet service** | | **Parameter option** | | |
| | | 05 | Reset | None | | |
| | | 0E | Get_Attribute_Single | None | | |
| | | 10 | Set_Attribute_Single | None | | |

| Object instance 2 | Section | Information | | Maximum number of instances | | |
|---|---|---|---|---|---|---|
| | **Instance type** | Polled I/O | | 1 | | |
| | **Production trigger** | Cyclic | | | | |
| | **Transport type** | Server | | | | |
| | **Transport class** | 2 | | | | |
| | **Attribute** | **ID** | **Contents** | **Get (read)** | **Set (write)** | **Value** |
| | | 1 | State | Yes | No | |
| | | 2 | Instance type | Yes | No | 01 (hexadecimal) |
| | | 3 | Transport class trigger | Yes | No | 82 (hexadecimal) |
| | | 4 | Produced connection ID | Yes | No | |
| | | 5 | Consumed connection ID | Yes | No | |
| | | 6 | Initial comm. characteris-tics | Yes | No | 01 (hexadecimal) |
| | | 7 | Produced connection size | Yes | No | |
| | | 8 | Consumed connection size | Yes | No | |
| | | 9 | Expected packet rate | Yes | Yes | |
| | | 12 | Watchdog time-out action | Yes | No | 00 (hexadecimal) |
| | | 13 | Produced connection path length | Yes | No | 06 (hexadecimal) |
| | | 14 | Produced connection path | Yes | No | See note 1. |
| | | 15 | Consumed connection path length | Yes | No | 06 (hexadecimal) |
| | | 16 | Consumed connection path | Yes | No | See note 2. |
| | | 17 | Production inhibit time | Yes | No | 0000 (hexadecimal) |
| | **Service** | **DeviceNet service** | | **Parameter option** | | |
| | | 05 | Reset | None | | |
| | | 0E | Get_Attribute_Single | None | | |
| | | 10 | Set_Attribute_Single | None | | |

1. Produced Connection Path
   IN Area 1: 20_04_24_64_30_03
   IN Area 2: 20_04_24_65_30_03
2. Consumed Connection Path
   OUT Area: 20_04_24_6E_30_03

| Object instance 4 | Section | Information | | Maximum number of instances | | |
|---|---|---|---|---|---|---|
| | **Instance type** | COS Cyclic | | 1 | | |
| | **Production trigger** | Cyclic | | | | |
| | **Transport type** | Server | | | | |
| | **Transport class** | 2 | | | | |
| | **Attribute** | **ID** | **Contents** | **Get (read)** | **Set (write)** | **Value** |
| | | 1 | State | Yes | No | |
| | | 2 | Instance type | Yes | No | 01 (hexadecimal) |
| | | 3 | Transport class trigger | Yes | No | 12 (hexadecimal) |
| | | 4 | Produced connection ID | Yes | No | |
| | | 5 | Consumed connection ID | Yes | No | |
| | | 6 | Initial comm. characteristics | Yes | No | 01 (hexadecimal) |
| | | 7 | Produced connection size | Yes | No | |
| | | 8 | Consumed connection size | Yes | No | 0800 (hexadecimal) |
| | | 9 | Expected packet rate | Yes | Yes | |
| | | 12 | Watchdog time-out action | Yes | No | 00 (hexadecimal) |
| | | 13 | Produced connection path length | Yes | No | 06 (hexadecimal) |
| | | 14 | Produced connection path | Yes | No | See note. |
| | | 15 | Consumed connection path length | Yes | No | 04 (hexadecimal) |
| | | 16 | Consumed connection path | Yes | No | 202B2401 |
| | | 17 | Production inhibit time | Yes | No | 0000 (hexadecimal) |
| | **Service** | **DeviceNet service** | | **Parameter option** | | |
| | | 05 | Reset | None | | |
| | | 0E | Get_Attribute_Single | None | | |
| | | 10 | Set_Attribute_Single | None | | |

**Note** Produced Connection Path
IN Area 1: 20_04_24_64_30_03
IN Area 2: 20_04_24_65_30_03

# Appendix B

## List of Connectable Devices

## DeviceNet Communications Unit

| Model | Specifications | Manufacturer |
|---|---|---|
| E5ZN-DRT | DeviceNet Communications Unit for E5ZN-DRT Temperature Controllers | OMRON |

## Terminal Units

| Model | Specifications | Manufacturer |
|---|---|---|
| E5ZN-SCT24S | Terminal Unit, with terminals for power supply, RS-485 communications, and Setting Display Unit. | OMRON |
| E5ZN-SCT18S | Terminal Unit, without terminals for power supply, RS-485 communications, and Setting Display Unit. | OMRON |

## E5ZN Temperature Controllers

| Model | Specifications | | | | Manufacturer |
|---|---|---|---|---|---|
| | Unit name | Input type | Control output | Auxiliary output | |
| E5ZN-2QNH03TC-FLK | Temperature Controller | Thermocouple | Voltage output (pulse output) | Sinking (NPN) | OMRON |
| E5ZN-2QNH03P-FLK | | Platinum-resistance thermometer | | | OMRON |
| E5ZN-2QPH03TC-FLK | | Thermocouple | | Sourcing (PNP) | OMRON |
| E5ZN-2QPH03P-FLK | | Platinum-resistance thermometer | | | OMRON |
| E5ZN-2TNH03TC-FLK | | Thermocouple | Transistor output (pulse output) | Sinking (NPN) | OMRON |
| E5ZN-2TNH03P-FLK | | Platinum-resistance thermometer | | | OMRON |
| E5ZN-2TPH03TC-FLK | | Thermocouple | | Sourcing (PNP) | OMRON |
| E5ZN-2TPH03P-FLK | | Platinum-resistance thermometer | | | OMRON |
| E5ZN-2CNF03TC-FLK | | Thermocouple | Analog output (current output) | Sinking (NPN) | OMRON |
| E5ZN-2CNF03P-FLK | | Platinum-resistance thermometer | | | OMRON |
| E5ZN-2CPF03TC-FLK | | Thermocouple | | Sourcing (PNP) | OMRON |
| E5ZN-2CPF03P-FLK | | Platinum-resistance thermometer | | | OMRON |

## DeviceNet Communications Cables

| Model | Specifications | Manufacturer |
|---|---|---|
| DCA2-5C10 | Thick Cable: 5 wires, 100 m | OMRON |
| DCA1-5C10 | Thin Cable: 5 wires, 100 m | OMRON |
| DVN18-10G | Thick Cable: 5 wires, 10 m | Nihon Wire & Cable (See note 1.) |
| DVN18-30G | Thick Cable: 5 wires, 30 m | Nihon Wire & Cable (See note 1.) |
| DVN18-50G | Thick Cable: 5 wires, 50 m | Nihon Wire & Cable (See note 1.) |
| DVN18-100G | Thick Cable: 5 wires, 100 m | Nihon Wire & Cable (See note 1.) |

| Model | Specifications | Manufacturer |
|---|---|---|
| DVN18-300G | Thick Cable: 5 wires, 300 m | Nihon Wire & Cable (See note 1.) |
| DVN18-500G | Thick Cable: 5 wires, 500 m | Nihon Wire & Cable (See note 1.) |
| DVN24-10G | Thin Cable: 5 wires, 10 m | Nihon Wire & Cable (See note 1.) |
| DVN24-30G | Thin Cable: 5 wires, 30 m | Nihon Wire & Cable (See note 1.) |
| DVN24-50G | Thin Cable: 5 wires, 50 m | Nihon Wire & Cable (See note 1.) |
| DVN24-100G | Thin Cable: 5 wires, 100 m | Nihon Wire & Cable (See note 1.) |
| DVN24-300G | Thin Cable: 5 wires, 300 m | Nihon Wire & Cable (See note 1.) |
| DVN24-500G | Thin Cable: 5 wires, 500 m | Nihon Wire & Cable (See note 1.) |
| 1485C-P1-A50 | Thick Cable: 5 wires, 50 m | Allen-Bradley (See note 2.) |
| 1485C-P1-C150 | Thin Cable: 5 wires, 150 m | Allen-Bradley (See note 2.) |
| DCA1-5CN□□W1 | Cable with shielded micro-size (M12) connectors on both ends (female socket and male plug)<br>Cable length: 0.5 m, 1 m, 2 m, 3 m, 5 m, and 10 m | OMRON |
| DCA1-5CN□□F1 | Cable with shielded micro-size (M12) connector (female socket) on one end<br>Cable length: 0.5 m, 1 m, 2 m, 3 m, 5 m, and 10 m | OMRON |
| DCA1-5CN□□H1 | Cable with shielded micro-size (M12) connector (male plug) on one end<br>Cable length: 0.5 m, 1 m, 2 m, 3 m, 5 m, and 10 m | OMRON |
| DCA1-5CN□□W5 | Cable with shielded connector on both ends (male plug on mini-size end, female socket on micro-size end)<br>Cable length: 1 m, 2 m, 5 m, and 10 m | OMRON |
| DCA2-5CN□□W1 | Cable with shielded mini-size connectors on both ends (female socket and male plug)<br>Cable length: 1 m, 2 m, 5 m, and 10 m | OMRON |
| DCA2-5CN□□F1 | Cable with shielded mini-size connector on one end (female socket)<br>Cable length: 1 m, 2 m, 5 m, and 10 m | OMRON |
| DCA1-5CN□□H1 | Cable with shielded mini-size connector on one end (male plug)<br>Cable length: 1 m, 2 m, 5 m, and 10 m | OMRON |

**Note** 1. The cables made by Nihon Wire & Cable Company Ltd. are sold through the OMRON 24 Service Co., Ltd. The product specifications are identical to the OMRON cable specifications.

2. The cables made by Allen-Bradley are stiffer than the cables made by OMRON and Nihon Wire & Cable Company Ltd., so do not bend the Allen-Bradley cables as much as the others.

Other DeviceNet communications cables are available from the following manufacturers. For details, refer to the product catalogs on the ODVA web site (http://www.odva.astem.or.jp/) or contact the manufacturer directly.

## DeviceNet Communications Connector

| Model | Specifications | Manufacturer |
|---|---|---|
| FKC2.5/5-STF-5.08AU | For node connection<br>Screwless type, includes connector set screws | PHOENIX CONTACT |

# Crimp Terminals for DeviceNet Communications Cables

| Model | Crimper | Remarks | Manufacturer |
|---|---|---|---|
| AI series:<br>AI-0.5-8WH-B for Thin Cable<br>(product code: 3201369) | ZA3 | For single-wire insertion | PHOENIX CONTACT |
| AI series:<br>AI-TWIN2×0.5-8WH for Thin Cable<br>(product code: 3200933) | UD6<br>(product code: 1204436) | For two-wire insertion<br>(multi-drop wiring) | |

# Terminating Resistors for DeviceNet Network

| Model | Specifications | Manufacturer |
|---|---|---|
| DRS1-T | Terminal-block Terminating Resistor, 121 Ω ±1% 1/4 W | OMRON |
| DRS2-1 | Shielded Terminating Resistor (male plug), micro-size (M12) | |
| DRS2-2 | Shielded Terminating Resistor (female socket), micro-size (M12) | |
| DRS3-1 | Shielded Terminating Resistor (male plug), mini-size | |

A Terminating Resistor can also be connected to a T-branch Tap or a one-branch Power Supply Tap.

# T-branch Taps

# One-branch Taps

| Model | Specifications | Manufacturer |
|---|---|---|
| DCN1-1C | Includes three XW4B-05C1-H1-D parallel connectors with screws<br>(When used on a trunk line, one branch line can be connected.)<br>Connector insertion direction: Horizontal<br>A Terminating Resistor (included as standard) can be connected. | OMRON |
| DCN1-2C | Includes three XW4B-05C1-H1-D parallel connectors with screws<br>(When used on a trunk line, one branch line can be connected.)<br>Connector insertion direction: Vertical<br>A Terminating Resistor (included as standard) can be connected. | OMRON |
| DCN1-2R | Includes three XW4B-05C1-VIR-D orthogonal connectors with screws<br>(When used on a trunk line, one branch line can be connected.)<br>Connector insertion direction: Vertical<br>A Terminating Resistor (included as standard) can be connected. | OMRON |

## Three-branch Taps

| Model | Specifications | Manufacturer |
|---|---|---|
| DCN1-3C | Includes five XW4B-05C1-H1-D parallel connectors with screws<br>(When used on a trunk line, three branch lines can be connected.)<br>Connector insertion direction: Horizontal<br>A Terminating Resistor (included as standard) can be connected. | OMRON |
| DCN1-4C | Includes five XW4B-05C1-H1-D parallel connectors with screws<br>(When used on a trunk line, three branch lines can be connected.)<br>Connector insertion direction: Vertical<br>A Terminating Resistor (included as standard) can be connected. | OMRON |
| DCN1-4R | Includes five XW4B-05C1-H1-D orthogonal connectors with screws<br>(When used on a trunk line, three branch lines can be connected.)<br>Connector insertion direction: Vertical<br>A Terminating Resistor (included as standard) can be connected. | OMRON |

## Shielded T-branch Connectors

| Model | Specifications | Manufacturer |
|---|---|---|
| DCN2-1 | One-branch shielded T-branch connectors, three micro-size (M12) connectors | OMRON |
| DCN3-11 | One-branch shielded T-branch connectors, three mini-size connectors | |
| DCN3-12 | One-branch shielded T-branch connectors, two mini-size connectors and one micro-size (M12) connector | |

## One-branch Power Supply Tap

| Model | Specifications | Manufacturer |
|---|---|---|
| DCN-1P | One-branch tap for power supply. Use this tap when connecting a communications power supply.<br>Includes two XW4B-05C1-H1-D parallel connectors with screws and two fuses as standard.<br>A Terminating Resistor (included as standard) can be connected. | OMRON |

# Index


## A

alarm outputs, 56
application precautions, xv
AT Execute/Cancel Bits, 56, 59
attribute ID, 91
Auto/Manual Bits, 57, 59

## B

baud rate, 9
  automatic detection, 2

## C

cables
  communications cables
    models, 135
class ID, 91
cleaning, 124
command block, 91
commands
  sending to Temperature Controllers, 77
communications
  cycle time, 115
  DeviceNet remote I/O, 110
  distance, 10
  error status, 55
  explicit messages, 5
  functions, 4
  media, 9
  message communications time, 118
  performance, 109
  power supply, 10
  refresh time, 116
  RS-485, 8, 31
  specifications, 9
  status, 55
  timing, 109
Communications Cables, 135
Communications Connectors, 136
Communications Unit comment
  setting, 72
CompoWay/F, 2, 5, 91
  command examples, 97
  communications cycle time, 115
  sending commands, 93
Configurator, 2, 6
  connecting, 71
  I/O allocations, 17, 18
  procedures, 69
connectors, 22
  attaching, 34
  models, 136
copy operation
  DIP switch, 24
crimp terminals, 29, 33, 137
  models, 137
CSA, 30

## D

destination node address, 91
device profiles, 130
DeviceNet Communications Unit, 135
dimensions, 22
DIN Track
  mounting, 27

## E

EC Directives, xvi
  conformance, xvii
EMC Directives, xvi
End Plates
  removing, 28
error codes, 92
error control, 10
error history, 86
expansion
  system, 3
explicit messages, 2, 5
  basic format, 91
  communications time, 118
  error codes, 92
  example, 103
  General Status Read, 105
  Maintenance Counter Save, 105
  overview, 90
  sending, 104
  Set Value for Unit Conduction Time or Total RUN Time, 106
  Temperature Controller Channel Maintenance Information Monitor Mode, 106
  types, 91
  Unit Conduction Time or Total RUN Time Read, 106

Unit Maintenance Bit, 105
Unit Maintenance Present Value, 105
Unit Maintenance Set Value, 105

## F

features, 2
FINS-mini commands, 96
fixed allocations, 43, 60

## H

HB outputs, 56

## I

I/O allocations, 17
data configuration, 41
master, 43, 60
procedure, 39
remote I/O communications, 36
simple allocation, 40
DIP switch, 25
simple allocations, 37
using the Configurator, 18, 38, 44
I/O response time, 110
IN area, 41, 49, 50
dividing in two, 62
indicators, 22, 23
troubleshooting, 122
Initial Setting Parameters, 52
input data, 55
inspection, 124
installation, 26
instance ID, 91, 107

## L

Last Maintenance Date, 85
setting, 75
Low Voltage Directive, xvi

## M

maintenance, 83, 121, 124
functions, 3
information, 85
replacing Units, 125
Maintenance Counter, 86
Maintenance Mode, 83
message communications time, 118
model numbers, 135
module status
indicator, 23
Monitor Mode
setting, 81
monitoring, 2, 88
mounting, 28
MS indicator, 23
multivendor connections, 129
MV Upper Limit/Lower Limit
changing, 66

## N

Network Bottom Power Voltage, 85
Network Peak Power Voltage, 85
Network Power Voltage, 85
Network Power Voltage Monitor
setting, 73
network status
indicator, 23
node address
setting, 24
NS indicator, 23
Number of Bytes Received, 92

## O

One-branch Power Supply Taps, 138
One-branch Taps, 137
operating environment, xv
operation, 2
procedures, 15
Operation Monitoring Data, 51
Operation Parameters, 51
ordering information, 135
OUT area, 42, 47, 50
output data, 58
Output Enable Bits, 58

## P

parameters, 50

copying, 76
editing, 71, 78
reading and writing, 5
part names, 22
PFP-100N, 27
PFP-50N, 27
PFP-M, 27
power supply, 10, 12
recommended models, 30
wiring, 30
precautions, xiii
products, 135
programming
examples, 65
PV
reading, 100

## R

refresh time, 115, 116
remote I/O communications, 2, 4, 35, 110
replacing Units, 125
response block, 92
RUN/STOP Bits, 56, 59

## S

S82K-05024CD, 30
S8VS-06024A, 30
safety precautions, xiv
service code, 91, 92
Setting Area 0/1 Bits, 57, 60
Setting Display Unit
wiring, 32
setup, 2
monitoring, 81
parameters, 6
procedure, 16
Temperature Controller Parameters, 13
using explicit messages, 14
using remote I/O communications, 14
Shielded T-branch Connectors, 138
Software Reset Bits, 60
Source Node Address, 92
SP
changing, 66
writing, 97
specifications, 9
DeviceNet, 130
startup time, 118
switches, 22
settings, 24
system configuration, 7

## T

T-branch Taps, 137
models, 137
Temperature Controller Comments
setting, 80
Temperature Controller IDs, 11
Temperature Controllers, 135
applicable models, 12
communications status
indicator, 23
editing parameters, 78
highest unit number, 25
initial settings, 13
mounting Communications Units, 29
number, 11
parameters, 50
registration, 13
sending commands, 77
Terminal Unit
terminal arrangement, 29
wiring, 29
Terminal Units, 135
connecting, 26
Terminating Resistors, 137
models, 137
Three-branch Taps, 137
troubleshooting, 121
TS indicator, 23

## U

UL, 30
Unit Conduction Time, 85
Unit Conduction Time Monitor
setting, 74
unit number
highest number, 25
Unit status, 57, 85
user-set allocations, 43, 61

## V

variable types
C0, 51
C1, 51
C3, 52

# Revision History

A manual revision code appears as a suffix to the catalog number on the front cover of the manual.

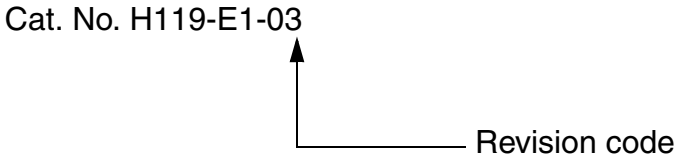


The following table outlines the changes made to the manual during each revision. Page numbers refer to the previous version.

| Revision code | Date | Revised content |
|---|---|---|
| 01 | October 2002 | Original production |
| 02 | July 2015 | Cover: Added trademark symbol.<br>Front matter: Added information before title page and replaced information on NOTE, Trademarks, and Copyrights page.<br>**Page v:** Removed information from the bottom of the page.<br>**Page vi:** Added information.<br>**Pages I and II:** Replaced information.<br>**Page 11:** Added electromagnetic environment specifications to bottom of table. |
| 03 | August 2016 | Corrected mistakes and added explanations. |

**OMRON Corporation** **Industrial Automation Company**
**Kyoto, JAPAN**
**Contact: www.ia.omron.com**

***Regional Headquarters***
**OMRON EUROPE B.V.**
Wegalaan 67-69, 2132 JD Hoofddorp
The Netherlands
Tel: (31)2356-81-300/Fax: (31)2356-81-388

**OMRON ELECTRONICS LLC**
2895 Greenspoint Parkway, Suite 200
Hoffman Estates, IL 60169 U.S.A.
Tel: (1) 847-843-7900/Fax: (1) 847-843-7787

**OMRON ASIA PACIFIC PTE. LTD.**
No. 438A Alexandra Road # 05-05/08 (Lobby 2),
Alexandra Technopark,
Singapore 119967
Tel: (65) 6835-3011/Fax: (65) 6835-2711

**OMRON (CHINA) CO., LTD.**
Room 2211, Bank of China Tower,
200 Yin Cheng Zhong Road,
PuDong New Area, Shanghai, 200120, China
Tel: (86) 21-5037-2222/Fax: (86) 21-5037-2200

**Authorized Distributor:**

© OMRON Corporation 2002-2016 All Rights Reserved.
In the interest of product improvement,
specifications are subject to change without notice.

**Cat. No. H119-E1-03** 0816