Cat. No. W225-E1-05

生産終了
DISCONTINUED

SYSMAC
C200H-TC□□□
Temperature Control Units

OPERATION MANUAL

OMRON

C200H-TC□□□
Temperature Control Units

Operation Manual

Revised December 2005

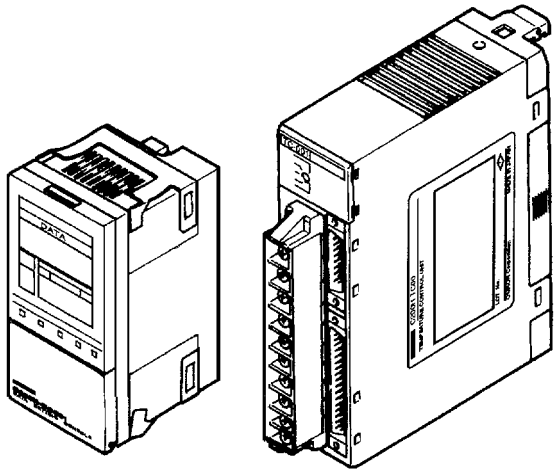

6489

Notice of Changes to Information on Conformance to EC Directives

OMRON

Applicable Manual
W225-E1-05
W240-E1-01
W241-E1-03

OMRON Corporation

Thank you for supporting OMRON products.
The EC Directive EN 61131-2 was modified as of May 1, 2006. As a result of the modification, the EC Directive information provided in the manual is not completely accurate. Please use the information provided below.

Conformance to EC Directives

Applicable Directives

- EMC Directives
- Low Voltage Directive

Concepts

■ EMC Directives

OMRON supplies electric devices that are used built into other devices or manufacturing equipment. These OMRON products are designed to conform to the related EMC standards (see note) so that the devices or equipment in which they are used can more easily conform to EMC standards.
EMC-related performance of the OMRON devices that conform to EC Directives will vary depending on the configuration, wiring, and other conditions of the equipment or control panel on which the OMRON devices are installed. The customer must, therefore, perform the final check to confirm that devices and the overall machine conform to EMC standards.

Note: Applicable EMC (Electromagnetic Compatibility) standards are as follows: EN 61131-2

■ Low Voltage Directive

Always ensure that devices operating at voltages of 50 to 1,000 V AC and 75 to 1,500 V DC meet the required safety standards for the PLC (EN 61131-2).

Conformance to EC Directives

C200H-series products conform to EC Directives. However, the following precautions must be observed to ensure that the machine or device in which the C200H PLC is used conforms to EC Directives:

1. The C200H PLC must be installed within a control panel.
2. You must use reinforced insulation or double insulation for the DC power supplies connected to the power supply terminals on PLCs that take DC power and for the DC power supplies connected to I/O Units. The DC power supply connected to the power supply terminals on PLCs using DC power must have an output hold time of at least 10 ms.
3. C200H-series products conforming to EC Directives also conform to EN 61131-2 for EMI. Radiated emission characteristics (10-m regulations) may vary depending on the configuration of the control panel used, other devices connected to the control panel, wiring, and other conditions. You must therefore confirm that the overall machine or equipment conforms to EC Directives even when using C200H-series products that conform to EC Directives.

Notice:

OMRON products are manufactured for use according to proper procedures by a qualified operator and only for the purposes described in this manual.

The following conventions are used to indicate and classify precautions in this manual. Always heed the information provided with them. Failure to heed precautions can result in injury to people or damage to property.

⚠ DANGER Indicates an imminently hazardous situation which, if not avoided, will result in death or serious injury. Additionally, there may be severe property damage.

⚠ WARNING Indicates a potentially hazardous situation which, if not avoided, could result in death or serious injury. Additionally, there may be severe property damage.

⚠ Caution Indicates a potentially hazardous situation which, if not avoided, may result in minor or moderate injury, or property damage.

OMRON Product References

All OMRON products are capitalized in this manual. The word “Unit” is also capitalized when it refers to an OMRON product, regardless of whether or not it appears in the proper name of the product.

The abbreviation “Ch,” which appears in some displays and on some OMRON products, often means “word” and is abbreviated “Wd” in documentation in this sense.

The abbreviation “PC” means Programmable Controller and is not used as an abbreviation for anything else.

Visual Aids

The following headings appear in the left column of the manual to help you locate different types of information.

Note Indicates information of particular interest for efficient and convenient operation of the product.

1,2,3... 1. Indicates lists of one sort or another, such as procedures, checklists, etc.

© OMRON, 1993

All rights reserved. No part of this publication may be reproduced, stored in a retrieval system, or transmitted, in any form, or by any means, mechanical, electronic, photocopying, recording, or otherwise, without the prior written permission of OMRON.

No patent liability is assumed with respect to the use of the information contained herein. Moreover, because OMRON is constantly striving to improve its high-quality products, the information contained in this manual is subject to change without notice. Every precaution has been taken in the preparation of this manual. Nevertheless, OMRON assumes no responsibility for errors or omissions. Neither is any liability assumed for damages resulting from the use of the information contained in this publication.

TABLE OF CONTENTS

PRECAUTIONS xv

1 Intended Audience xvi
2 General Precautions xvi
3 Safety Precautions xvi
4 Operating Environment Precautions xvii
5 Application Precautions xviii

SECTION 1
System Configuration and Features 1

1-1 Features 2
1-2 Basic System Configuration 3

SECTION 2
Connections and Settings 7

2-1 Nomenclature 8
2-2 Switch Settings 9
2-3 Wiring 13

SECTION 3
Data Setting Console Operation 21

3-1 Operating Procedure 22
3-2 Data Flow 23
3-3 Nomenclature and Features 24
3-4 Parameter Displays and Settings 26

SECTION 4
PC Memory Allocation and Programming. 35

4-1 Memory Allocation 36
4-2 Data Flow 44
4-3 Programming 44

SECTION 5
Troubleshooting 61

5-1 Error Detection 62

Appendices

A Specifications 65
B Sensor Temperature Measurement Ranges 67
C Heater Burnout Detection 69
D Dimensions 73

Index. 75

Revision History 77

About this Manual:

This manual describes the installation and operation of the C200H-TC□□□ Temperature Control Units and includes the sections described below. Also briefly described is the basic operation and installation of the C200H-DSC01 Data Setting Console.

Please read this manual carefully and be sure you understand the information provided before attempting to install and operate a Temperature Control Unit or Data Setting Console.

Section 1 provides Temperature Control Unit features and describes its basic system configuration.

Section 2 provides information on the connections and settings of the Temperature Control Units.

Section 3 provides the basic operating procedures of the Data Setting Console including parameter settings and displays.

Section 4 provides the C200H PC's memory allocation for the Temperature Control Units. Basic programming procedures and examples are also provided.

Section 5 provides possible errors and error remedies.

The four **Appendices** provide references dealing with specifications, sensor temperature measurement ranges, heater burnout detection, and dimensions.

⚠ **WARNING** Failure to read and understand the information provided in this manual may result in personal injury or death, damage to the product, or product failure. Please read each section in its entirety and be sure you understand the information provided in the section and related sections before attempting any of the procedures or operations given.

Read and Understand this Manual

Please read and understand this manual before using the product. Please consult your OMRON representative if you have any questions or comments.

Warranty and Limitations of Liability

WARRANTY
OMRON's exclusive warranty is that the products are free from defects in materials and workmanship for a period of one year (or other period if specified) from date of sale by OMRON. OMRON MAKES NO WARRANTY OR REPRESENTATION, EXPRESS OR IMPLIED, REGARDING NON-INFRINGEMENT, MERCHANTABILITY, OR FITNESS FOR PARTICULAR PURPOSE OF THE PRODUCTS. ANY BUYER OR USER ACKNOWLEDGES THAT THE BUYER OR USER ALONE HAS DETERMINED THAT THE PRODUCTS WILL SUITABLY MEET THE REQUIREMENTS OF THEIR INTENDED USE. OMRON DISCLAIMS ALL OTHER WARRANTIES, EXPRESS OR IMPLIED.

LIMITATIONS OF LIABILITY
OMRON SHALL NOT BE RESPONSIBLE FOR SPECIAL, INDIRECT, OR CONSEQUENTIAL DAMAGES, LOSS OF PROFITS OR COMMERCIAL LOSS IN ANY WAY CONNECTED WITH THE PRODUCTS, WHETHER SUCH CLAIM IS BASED ON CONTRACT, WARRANTY, NEGLIGENCE, OR STRICT LIABILITY. In no event shall the responsibility of OMRON for any act exceed the individual price of the product on which liability is asserted. IN NO EVENT SHALL OMRON BE RESPONSIBLE FOR WARRANTY, REPAIR, OR OTHER CLAIMS REGARDING THE PRODUCTS UNLESS OMRON'S ANALYSIS CONFIRMS THAT THE PRODUCTS WERE PROPERLY HANDLED, STORED, INSTALLED, AND MAINTAINED AND NOT SUBJECT TO CONTAMINATION, ABUSE, MISUSE, OR INAPPROPRIATE MODIFICATION OR REPAIR.

Application Considerations

SUITABILITY FOR USE

OMRON shall not be responsible for conformity with any standards, codes, or regulations that apply to the combination of products in the customer's application or use of the products.

At the customer's request, OMRON will provide applicable third party certification documents identifying ratings and limitations of use that apply to the products. This information by itself is not sufficient for a complete determination of the suitability of the products in combination with the end product, machine, system, or other application or use.

The following are some examples of applications for which particular attention must be given. This is not intended to be an exhaustive list of all possible uses of the products, nor is it intended to imply that the uses listed may be suitable for the products:

- Outdoor use, uses involving potential chemical contamination or electrical interference, or conditions or uses not described in this manual.
- Nuclear energy control systems, combustion systems, railroad systems, aviation systems, medical equipment, amusement machines, vehicles, safety equipment, and installations subject to separate industry or government regulations.
- Systems, machines, and equipment that could present a risk to life or property.

Please know and observe all prohibitions of use applicable to the products.

NEVER USE THE PRODUCTS FOR AN APPLICATION INVOLVING SERIOUS RISK TO LIFE OR PROPERTY WITHOUT ENSURING THAT THE SYSTEM AS A WHOLE HAS BEEN DESIGNED TO ADDRESS THE RISKS, AND THAT THE OMRON PRODUCTS ARE PROPERLY RATED AND INSTALLED FOR THE INTENDED USE WITHIN THE OVERALL EQUIPMENT OR SYSTEM.

PROGRAMMABLE PRODUCTS

OMRON shall not be responsible for the user's programming of a programmable product, or any consequence thereof.

Disclaimers

CHANGE IN SPECIFICATIONS

Product specifications and accessories may be changed at any time based on improvements and other reasons.

It is our practice to change model numbers when published ratings or features are changed, or when significant construction changes are made. However, some specifications of the products may be changed without any notice. When in doubt, special model numbers may be assigned to fix or establish key specifications for your application on your request. Please consult with your OMRON representative at any time to confirm actual specifications of purchased products.

DIMENSIONS AND WEIGHTS

Dimensions and weights are nominal and are not to be used for manufacturing purposes, even when tolerances are shown.

PERFORMANCE DATA

Performance data given in this manual is provided as a guide for the user in determining suitability and does not constitute a warranty. It may represent the result of OMRON's test conditions, and the users must correlate it to actual application requirements. Actual performance is subject to the OMRON Warranty and Limitations of Liability.

ERRORS AND OMISSIONS

The information in this manual has been carefully checked and is believed to be accurate; however, no responsibility is assumed for clerical, typographical, or proofreading errors, or omissions.

PRECAUTIONS

This section provides general precautions for using C200H Temperature Control Units and related devices.

The information contained in this section is important for the safe and reliable application of the C200H Temperature Control Units. You must read this section and understand the information contained before attempting to set up or operate a C200H Temperature Control Unit.

1 Intended Audience xvi
2 General Precautions xvi
3 Safety Precautions xvi
4 Operating Environment Precautions xvii
5 Application Precautions xviii

1 Intended Audience

This manual is intended for the following personnel, who must also have knowledge of electrical systems (an electrical engineer or the equivalent).

- Personnel in charge of installing FA systems.
- Personnel in charge of designing FA systems.
- Personnel in charge of managing FA systems and facilities.

2 General Precautions

The user must operate the product according to the performance specifications described in the relevant manuals.

Before using the product under conditions which are not described in the manual or applying the product to nuclear control systems, railroad systems, aviation systems, vehicles, combustion systems, medical equipment, amusement machines, safety equipment, and other systems, machines, and equipment that may have a serious influence on lives and property if used improperly, consult your OMRON representative.

Make sure that the ratings and performance characteristics of the product are sufficient for the systems, machines, and equipment, and be sure to provide the systems, machines, and equipment with double safety mechanisms.

This manual provides information for programming and operating the Unit. Be sure to read this manual before attempting to use the Unit and keep this manual close at hand for reference during operation.

⚠ WARNING It is extremely important that a PC and all PC Units be used for the specified purpose and under the specified conditions, especially in applications that can directly or indirectly affect human life. You must consult with your OMRON representative before applying a PC system to the above-mentioned applications.

3 Safety Precautions

⚠ WARNING Do not attempt to take any Unit apart while the power is being supplied. Doing so may result in electric shock.

⚠ WARNING Do not touch any of the terminals or terminal blocks while the power is being supplied. Doing so may result in electric shock.

⚠ WARNING Do not attempt to disassemble, repair, or modify any Units. Any attempt to do so may result in malfunction, fire, or electric shock.

⚠ WARNING Provide safety measures in external circuits (i.e., not in the Programmable Controller), including the following items, to ensure safety in the system if an abnormality occurs due to malfunction of the PC or another external factor affecting the PC operation. Not doing so may result in serious accidents.

- Emergency stop circuits, interlock circuits, limit circuits, and similar safety measures must be provided in external control circuits.
- The PC will turn OFF all outputs when its self-diagnosis function detects any error or when a severe failure alarm (FALS) instruction is executed.

As a countermeasure for such errors, external safety measures must be provided to ensure safety in the system.

- The PC outputs may remain ON or OFF due to deposits on or burning of the output relays, or destruction of the output transistors. As a countermeasure for such problems, external safety measures must be provided to ensure safety in the system.
- When the 24-V DC output (service power supply to the PC) is overloaded or short-circuited, the voltage may drop and result in the outputs being turned OFF. As a countermeasure for such problems, external safety measures must be provided to ensure safety in the system.

⚠ **WARNING** Provide double safety mechanisms to handle incorrect signals that can be generated by broken signal lines or momentary power interruptions. Faulty operation may result in serious accidents.

⚠ **Caution** The Heating and Cooling Temperature Control Unit will not operate normally if the cycle time of the CPU Unit is less than 8 ms.

- If the cycle time is less than 8 ms (e.g., the program execution time is short), increase it to at least 8 ms.
  - For the C200H, C200HS, or C200HX/HG/HE(-Z), use the SCAN instruction to set a minimum cycle time.
  - For a CS-series PC, set the cycle time in the PC Setup (Programming Console address 208, bits 00 to 15).
- If the IORF instruction is used for a Heating and Cooling Temperature Control Unit, allow at least 8 ms between IORF executions.

⚠ **Caution** The write life for the EEPROM built into the Heating and Cooling Temperature Control Unit is 100,000 operations. Bit corruption will occur if the memory is written more than 100,000 times. Do not use a Unit in which memory has been written more than 100,000 times.

4 Operating Environment Precautions

⚠ **Caution** Do not operate the control system in the following locations:

- Locations subject to direct sunlight.
- Locations subject to temperatures or humidity outside the range specified in the specifications.
- Locations subject to condensation as the result of severe changes in temperature.
- Locations subject to corrosive or flammable gases.
- Locations subject to dust (especially iron dust) or salts.
- Locations subject to exposure to water, oil, or chemicals.
- Locations subject to shock or vibration.

⚠ **Caution** Take appropriate and sufficient countermeasures when installing systems in the following locations:

- Locations subject to static electricity or other forms of noise.

- Locations subject to strong electromagnetic fields.
- Locations subject to possible exposure to radioactivity.
- Locations close to power supplies.

⚠ **Caution** The operating environment of the PC system can have a large effect on the longevity and reliability of the system. Improper operating environments can lead to malfunction, failure, and other unforeseeable problems with the PC system. Be sure that the operating environment is within the specified conditions at installation and remains within the specified conditions during the life of the system.

5 Application Precautions

Observe the following precautions when using the PC system.

⚠ **WARNING** Always heed these precautions. Failure to abide by the following precautions could lead to serious or possibly fatal injury.

- Always ground the system to 100 Ω or less when installing the Units. Not connecting to a ground of 100 Ω or less may result in electric shock.
- Always turn OFF the power supply to the PC before attempting any of the following. Not turning OFF the power supply may result in malfunction or electric shock.
  - Mounting or dismounting I/O Units, CPU Units, Memory Units, Power Supply Units, or any other Units.
  - Assembling the Units.
  - Setting DIP switches or rotary switches.
  - Connecting cables or wiring the system.
  - Connecting or disconnecting the connectors.

⚠ **Caution** Failure to abide by the following precautions could lead to faulty operation of the PC or the system, or could damage the PC or PC Units. Always heed these precautions.

- Fail-safe measures must be taken by the customer to ensure safety in the event of incorrect, missing, or abnormal signals caused by broken signal lines, momentary power interruptions, or other causes.
- Always use the power supply voltages specified in this manual. An incorrect voltage may result in malfunction or burning.
- Take appropriate measures to ensure that the specified power with the rated voltage and frequency is supplied. Be particularly careful in places where the power supply is unstable. An incorrect power supply may result in malfunction.
- Install external breakers and take other safety measures against short-circuiting in external wiring. Insufficient safety measures against short-circuiting may result in burning.
- Install Units as far as possible away from devices that generate strong, high-frequency noise.
- Do not drop a Unit or subject it to excessive shock or vibration.
- Do not apply voltages to the Input Units in excess of the rated input voltage. Excess voltages may result in burning.

- Do not apply voltages or connect loads to the Output Units in excess of the maximum switching capacity. Excess voltage or loads may result in burning.
- Disconnect the LG and GR terminal on the Power Supply Unit when performing withstand voltage tests or insulation resistance tests. Not disconnecting the functional ground terminal may result in burning.
- Be sure that all the mounting screws, terminal screws, and cable connector screws are tightened to the torque specified in this manual. Incorrect tightening torque may result in malfunction.
- Leave the label attached to the Unit when wiring. Removing the label may result in malfunction if foreign matter enters the Unit.
- Remove the label after the completion of wiring to ensure proper heat dissipation. Leaving the label attached may result in malfunction.
- Double-check all wiring and switch settings before turning ON the power supply. Incorrect wiring may result in burning.
- Wire correctly. Incorrect wiring may result in burning.
- Mount Units only after checking terminal blocks and connectors completely.
- Be sure that the terminal blocks, Memory Units, expansion cables, and other items with locking devices are properly locked into place. Improper locking may result in malfunction.
- Check the user program for proper execution before actually running it on the Unit. Not checking the program may result in an unexpected operation.
- Confirm that no adverse effect will occur in the system before attempting any of the following. Not doing so may result in an unexpected operation.
    - Changing the operating mode of the PC (including changing the Startup Mode).
    - Force-setting/force-resetting any bit in memory.
    - Changing the present value of any word or any set value in memory.
- Resume operation only after transferring to the new CPU Unit the contents of the DM Area, HR Area, and other data required for resuming operation. Not doing so may result in an unexpected operation.
- Do not pull on the cables or bend the cables beyond their natural limit. Doing either of these may break the cables.
- Do not place objects on top of the cables or other wiring lines. Doing so may break the cables.
- Use crimp terminals for wiring. Do not connect bare stranded wires directly to terminals. Connection of bare stranded wires may result in burning.
- When replacing parts, be sure to confirm that the rating of a new part is correct. Not doing so may result in malfunction or burning.
- Before touching a Unit, be sure to first touch a grounded metallic object in order to discharge any static built-up. Not doing so may result in malfunction or damage.

SECTION 1
System Configuration and Features

This section describes Temperature Control Unit features and describes its basic system configuration.

1-1 Features 2
1-2 Basic System Configuration 3

1-1 Features

The Temperature Control Unit measures the temperature of an object with a connected temperature sensor (thermocouple or platinum resistance thermometer) and controls the temperature according to a preset control mode.

PID with Feed-forward Circuitry (Feed-forward PID)

Stable temperature control is achieved using PID control with feed-forward circuitry and an auto-tuning feature.
ON/OFF control can also be selected.

Two Temperature Control Loops with a Single Unit

Two versions of Temperature Control Unit are available: the C200H-TC00□ for thermocouple use and the C200H-TC10□ for platinum resistance thermometers, each offering two control loops.

Comprehensive Output Specifications

Three types of output specification versions are available: C200H-TC□□1 for transistor output, C200H-TC□□2 for voltage output, and C200H-TC□□3 for current output.

Heater Burnout Detection

Through a Current Transformer, heater burnout can be quickly detected with a minimum current difference of 0.5 A and a heater burnout detection setting range of 0.1 to 4.9 A, and allows for the rapid correction of problems. Heater burnout detection is possible for each of the two control loops.

Eight Banks of Data Settings

Eight data values such as set point (SP) and alarm set values can be preset in eight data banks for easy selection.

Data Input and Display

The C200H-DSC01 Data Setting Console (sold separately) is used to input data and display process values (PV) and set values (SV).
The easy-to-read display can be panel-mounted.

User Programs Allow Reading and Writing of Data

The 21 commands are used to read and set data with the C200H user programs.

1-2 Basic System Configuration

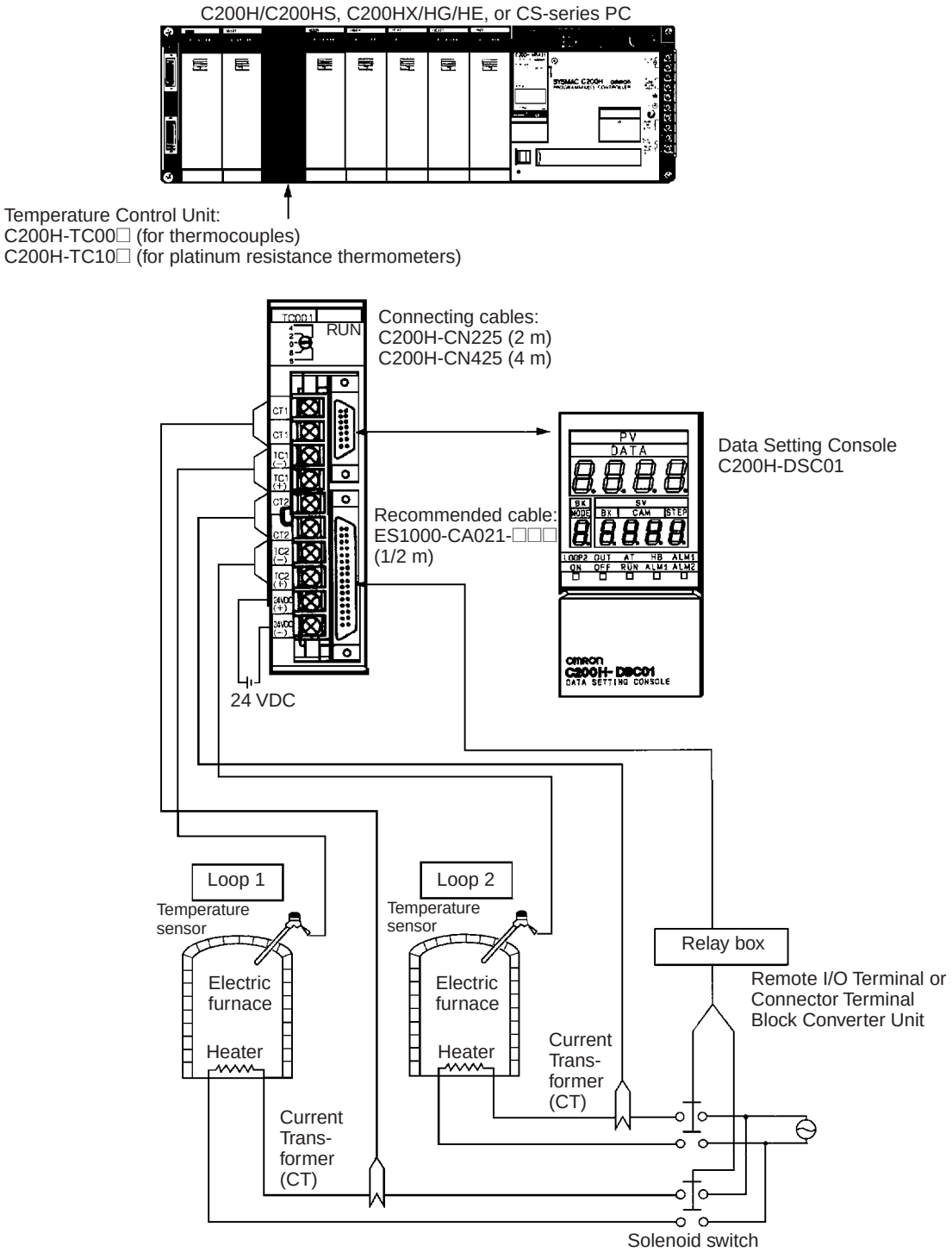

Temperature Control Unit Models

Sensor	Output type		
	Transistor output	**Voltage output**	**Current output**
Thermocouple	C200H-TC001	C200H-TC002	C200H-TC003
Platinum resistance thermometer	C200H-TC101	C200H-TC102	C200H-TC103

Applicable CPU Units

PC Series	CPU Unit	Mounting restrictions
CS Series	CS1H-CPU□□-E CS1G-CPU□□-E	None
C200HX/HG/HE	C200HE-CPU11/32/42-E/ZE C200HG-CPU33/43-E/ZE C200HX-CPU34/44-E/ZE	None
	C200HG-CPU53/63-E/ZE C200HX-CPU54/64-E/ZE C200HX-CPU65-ZE/85-ZE	None
C200HS	C200HS-CPU01-E/01-EC/21-E/21-EC/31-E/03-E/23-E/33-E	None
C200H	C200H-CPU01-E/03-E/11-E/21-E/22-E/23-E/31-E	Cannot be mounted to the two rightmost slots on the CPU Rack.

Number of Units

The Temperature Control Unit belongs to the C200H Special I/O Unit group. A maximum of ten Special I/O Units (including PC Link Units) can be mounted on the CPU Rack, Expansion I/O Rack, and Slave Rack.

Note

1. Refer to the manual for your CPU Unit for information on which Units belong to the Special I/O Unit group.
2. The Units used are limited by the maximum supply current and current consumption. Refer to the manual for your CPU Unit for specific information.
3. The number of Units used with a Slave Rack is limited by data transmission considerations, as described below.

Number of Units Mountable on Slave Rack

The number of Special I/O Units used with a Slave Rack is limited by data transmission considerations, as shown in the table below. The numbers in the table indicate the maximum number of Units of groups A, B, C, or D which can be used with a single Slave Rack.

A	B	C	D
High-speed Counter Units Position Control Units (NC111/112) ASCII Unit Analog I/O Units ID Sensor Units Fuzzy Logic Unit	High-density and Mixed I/O Units Temperature Control Units Heat/Cool Temperature Control Units PID Control Units Cam Positioner Unit	Temperature Sensor Units Voice Unit	Position Control Unit (NC211)
4 units max.	8 units max.	6 units max.	2 units max.

Note

1. When a combination of Units from groups A, B, C, and D is used, the number from each group must satisfy both the following equations:

   $3A + B + 2C + 6D \leq 12$

   $A + B + C + D \leq 8$

2. Other Units can be added until the total number of units reaches ten. If PC Link Units are used, the number of Units including the PC Link Units must not exceed ten.

Precautions

The IR area of the C200H Special I/O Unit is allocated according to the setting of the unit number switch on the front panel, *not* the address of the slot where the unit is mounted. Refer to *4-1 Memory Allocation* for the allocation of the memory area.

Leave the two slots next to the CPU free. It is not possible to use devices connected to the CPU (such as the Programming Console) if these slots are occupied.

If the C200H Slave Rack is connected to another SYSMAC model Remote I/O Master Unit, such as the C500, C1000H, or C2000H, it is not possible to use a Special I/O Unit with the C200H Slave Rack.

⚠ WARNING Always turn the PC power OFF before connecting or disconnecting a Unit, terminal block, or output connector.

⚠ Caution Connect thermocouples with the appropriate compensating conductor.
Wire I/O leads in separate ducts from power leads to prevent noise problems.

New Functions

Units with the following lot number or later support the following new functions.

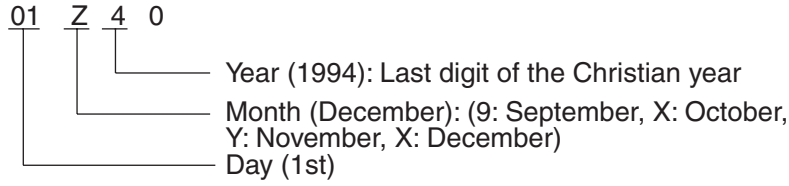

Descriptions of New Functions

RUN/STOP Bits

Stop Bits have been added. These bits are supported with either fixed or normal memory allocations.

Word (n+2), bit 06	Loop 1 Stop Bit	Turn OFF to perform temperature control for the loop. Turn ON to stop control.
Word (n+2), bit 04	Loop 2 Stop Bit	

Note These bits cannot be used when SW203-5 is set to ON to stop control in PROGRAM mode. When SW203-5 is ON, control is always stopped.

Unit status will be as shown in the following table depending on the combination of SW203-5 settings and operating mode of the CPU Unit.

SW203-5 setting		OFF (control continues)		ON (control stops)	
Operating mode of CPU Unit		RUN or MONITOR	PROGRAM	RUN or MONITOR	PROGRAM
Stop Bits	OFF (Run)	RUN	RUN	RUN	STOP
	ON (Stop)	STOP	STOP	STOP	STOP

- To run or stop the temperature control using the Stop Bits, set SW203-5 to OFF.
- To run or stop the temperature control only through the operating mode of the CPU Unit, keep the Stop Bit OFF (RUN).

RUN/STOP Monitor Flags

Stop Flags have been added. These flags are supported with either fixed or normal memory allocations.

Word (n+8), bit 08	Loop 1 Stop Flag	When OFF, temperature control is being performed for the loop. When ON, control is not being performed.
Word (n+9), bit 08	Loop 2 Stop Flag	

These Flags turn ON and OFF depending on whether temperature control is run or stopped. Therefore, they do not necessarily have the same status as the Stop Bits described above.

RAM Write Commands

Previously, commands could be used to read and write to the EEPROM only. These new commands allow writing to RAM.

When various settings require frequent rewriting, write to RAM, verify the setting values, and then save the data by writing it to EEPROM. The data written to the RAM will be deleted when the power is turned OFF.

The following commands can be used to write to RAM.

Parameter	Command		Write	Read
Set point	4	0	Yes	No
Execution bank number	4	2	Yes	No
Alarm SV 1	4	3	Yes	No
Alarm SV 2	4	4	Yes	No
Input shift value	4	5	Yes	No
Proportional band	4	6	Yes	No
Integral (reset) time	4	7	Yes	No
Derivative (rate) time	4	8	Yes	No
SP lower limit	5	0	Yes	No
SP upper limit	5	1	Yes	No
Control period	5	7	Yes	No
Hysteresis	5	8	Yes	No
Alarm hysteresis	5	9	Yes	No
Heater burnout current	5	B	Yes	No
Alarm 1 mode	6	4	Yes	No
Alarm 2 mode	6	5	Yes	No

SECTION 2
Connections and Settings

This section provides information on the connections and settings of the Temperature Control Unit.

2-1 Nomenclature 8
2-2 Switch Settings 9
2-3 Wiring 13
2-3-1 Input Wiring 13
2-3-2 Output Wiring 16
2-3-3 Data Setting Console Cables 19

2-1 Nomenclature

C200H-TC00□ (For Thermocouple)

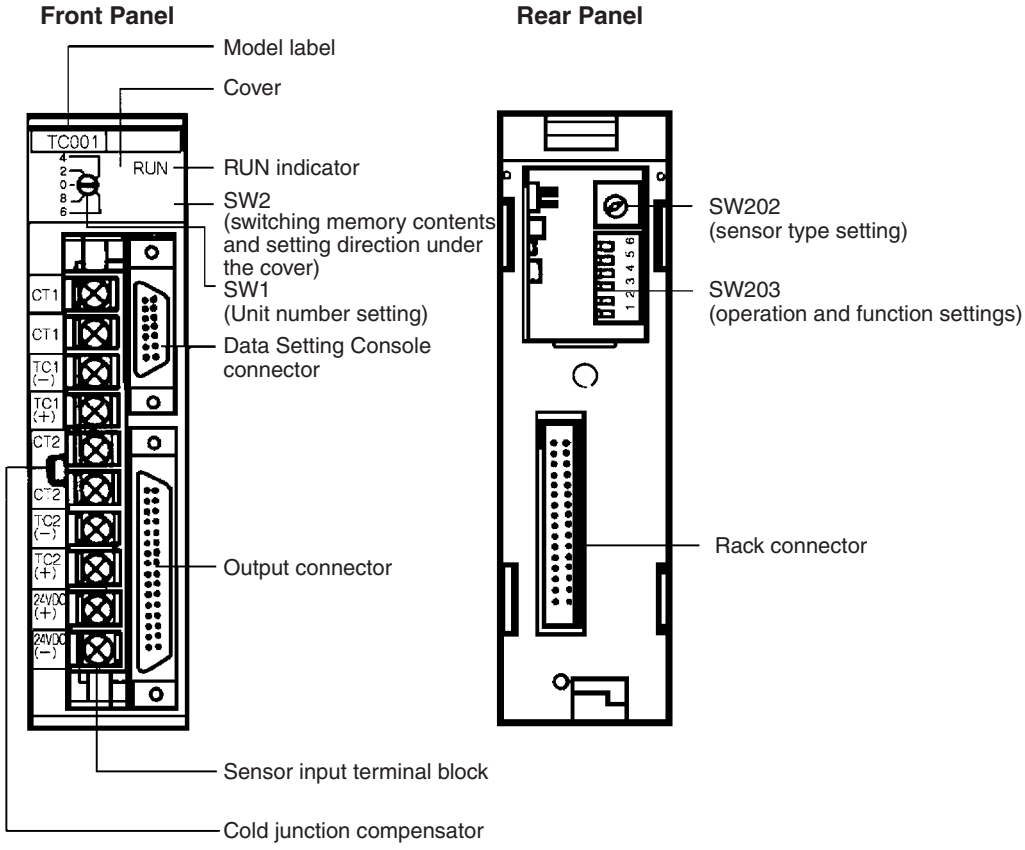

C200H-TC10□ (For Platinum Resistance Thermometer)

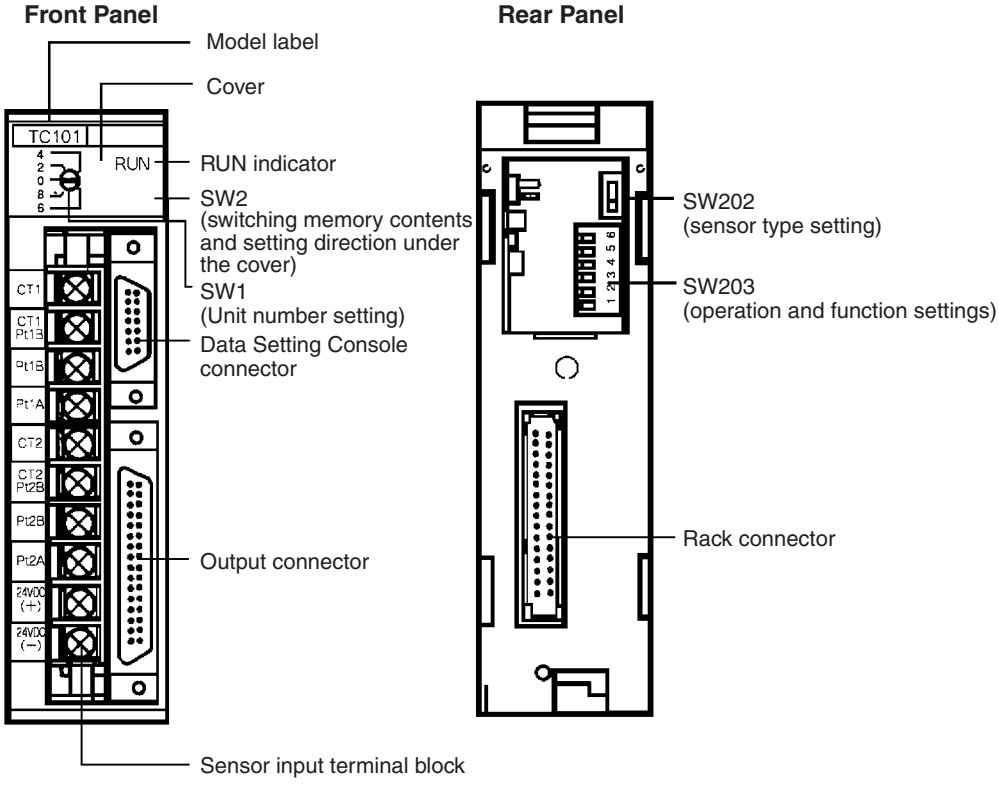

Indicators

RUN	Lit when the Temperature Control Unit is operating normally. Unlit when an alarm occurs, and Unit operation stops.

2-2 Switch Settings

The function and setting of switches are identical for all models, except SW202.

Unit Number

SW1	Unit number setting

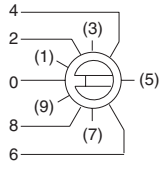

The cut-out indicates the selected position. Turn the switch with a flat-blade screwdriver. Turn the switch until it clicks in position. Do not leave the switch between two settings.

The addresses are allocated as shown in the following table according to the Unit number setting.

Unit No. setting	Allocated address
0	Wd 100 to 109
1	Wd 110 to 119
2	Wd 120 to 129
3	Wd 130 to 139
4	Wd 140 to 149
5	Wd 150 to 159
6	Wd 160 to 169
7	Wd 170 to 179
8	Wd 180 to 189
9	Wd 190 to 199

The switch is factory-set to 0.

Note If the Unit number is set to an existing unit number, an alarm occurs and the PC does not operate.
Turn the PC power OFF before setting the unit number. If the setting is changed with the power ON, the new setting will not be valid until the power is turned OFF and back ON again.

Switching Memory Contents and Setting Direction

SW2	Switching memory contents and setting direction

Remove the cover and set the switch with the tip of a ballpoint pen or similar object.

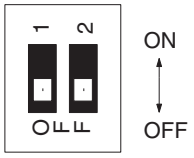

Pin	Pin 1	Pin 2
Function	Switching memory contents	Setting direction
ON	Normal	CPU Unit
OFF	Fixed	Data Setting Console

The switch is factory-set to OFF: Parameters can be set from the Data Setting Console only.

The new setting is valid immediately after the switch setting is changed.

Removing and Attaching the Cover

Removing the Cover

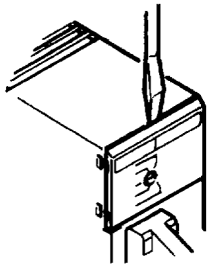

Insert a small flat-blade screwdriver between the case and the cover at the top of the Unit and lever off the cover.

Attaching the Cover

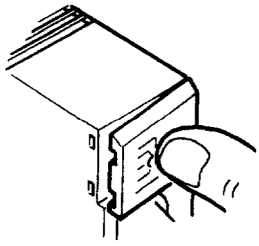

Place the right edge of the cover against the case and press into position.

Switching Memory Contents

The contents of the allocated memory differ according to the Unit number setting.

Normal	Data can be set as required using commands (Refer to *4-1 Memory Allocation*).
Fixed	Fixed data is allocated to memory. Direct reading and writing of data is possible.

Refer to *4-1 Memory Allocation* for details of the memory contents.

Setting Direction

Selects whether the data settings are made from the Data Setting Console or from the C200H PC, using a user program or Programming Console.

Executed Bank Number

The reading and setting of the executed bank number are possible from a user program or from a device, such as the Programming Console, regardless of the ON/OFF setting of switch SW2-2.

Sensor Type

SW202	Sensor type setting

C200H-TC00□

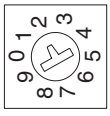

Setting	0	1	2	3	4	5	6	7	8	9
Sensor type	R	S	K	J	T	E	B	N	L	U

The switch is factory-set to 2.

The selected position is shown by the arrow. Turn the switch with a small flat-blade screwdriver.

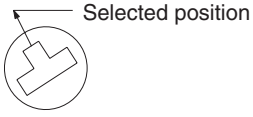

C200H-TC10□

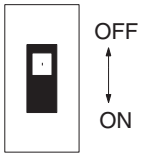

Setting	Sensor type
OFF	JPt
ON	Pt

The switch is factory-set to OFF.

See *Appendix B Sensor Temperature Measurement Range* for the measurable temperature range.

Operation and Function Setting

SW203	Operation and Function Setting

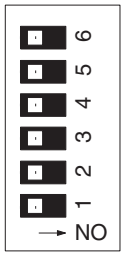

OFF ⟷ ON

Pin	Function	OFF	ON
6	Not used	---	---
5	Operation in C200H program mode	Continue control	Interrupt control
4	Loop 2	Enabled	Disabled (not used)
3	Display units	°C	°F
2	Control action	Reverse (heating control)	Normal (cooling control)
1	Control method	Feed-forward PID	ON/OFF control

The switch is factory-set to OFF.

Operation in CPU Unit Program Mode

Selects if the temperature control is continued or interrupted when the CPU Unit is set to PROGRAM mode.

Note Units with a lot number of 01Z40 or later are provided with Stop Bits for loops 1 and 2 in bits 06 and 04 of word (n+2). For further information, refer to page 5.

Loop 2

Selects if input Loop 2 is used or not.

Note

1. Always set this switch to the ON (disabled) position when input Loop 2 is not used. A sensor error occurs if this switch is set to the OFF (enabled) position when no temperature sensor is connected to Loop 2.
2. Use input Loop 1 when only one loop is used.
   It is not possible to use Loop 2 if Loop 1 is not used.

Display Units

Selects whether setting and SVs displayed on the Data Setting Console are in Celsius or Fahrenheit.

Control Action

Reverse:
For heating control with a heater. The heater output is increased when the measured temperature is below the SP (i.e., a negative temperature difference).

Normal:
For cooling control of overheated objects using cooling water or some other method. The cooling water output is increased when the measured temperature is above the SP (i.e., a positive temperature difference).

Control Method

Selects the method of control.

2-3 Wiring

2-3-1 Input Wiring

C200H-TC00□ Thermocouple

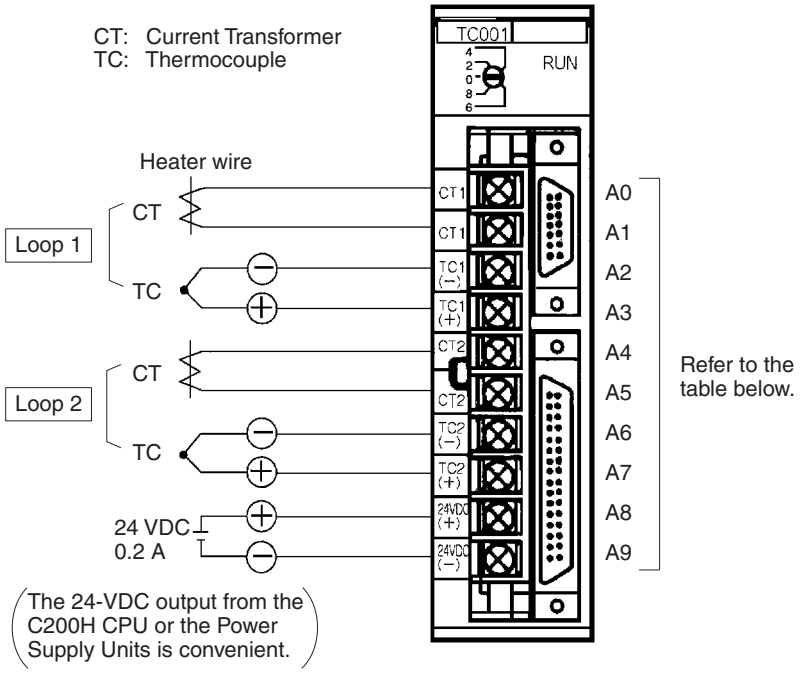

Terminal No.	Terminal name	
A0	CT	Loop 1
A1	CT	
A2	TC (–)	
A3	TC (+)	
A4	CT	Loop 2
A5	CT	
A6	TC (–)	
A7	TC (+)	
A8	24 VDC	
A9	0 V	

C200H-TC10□ Platinum Resistance Thermometer

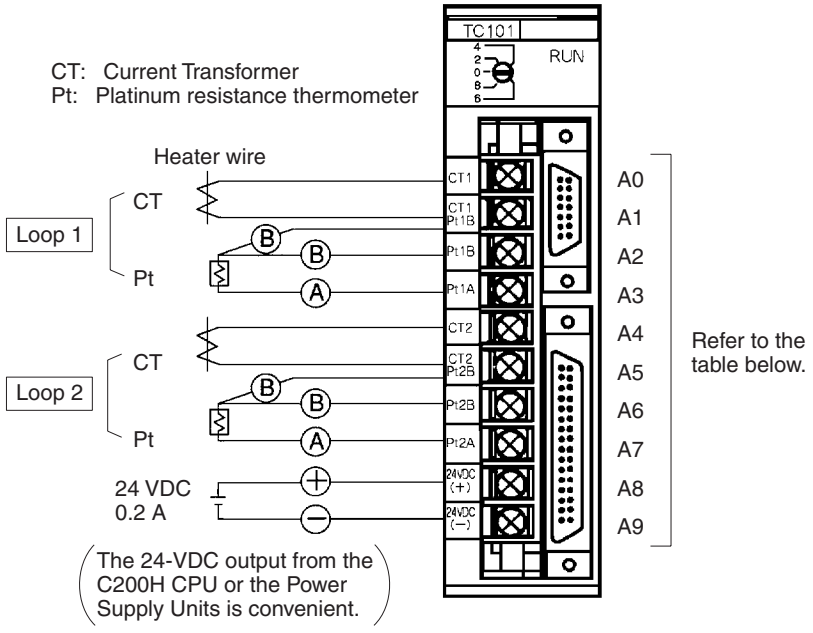

Terminal No.	Terminal name	
A0	CT	Loop 1
A1	CT/Pt (B)	
A2	Pt (B)	
A3	Pt (A)	
A4	CT	Loop 2
A5	CT/Pt (B)	
A6	Pt (B)	
A7	Pt (A)	
A8	24 VDC	
A9	0 V	

Screw down Pt(B) and CT together at terminals A1 and A5.

Input Wiring Precautions

1,2,3...

1. Set the type of temperature sensor to thermocouple or platinum resistance thermometer with SW202 on the rear of the Unit.

   The Unit will not operate correctly if the switch setting does not match the type of temperature sensor connected.

   Do not connect different types of temperature sensors to Loop 1 and Loop 2.
2. If no input lead is connected to Loop 2, turn SW203-4 on the rear of the Unit ON to disable Loop 2. A sensor error occurs if this switch is set to the OFF (enabled) position when no temperature sensor is connected to Loop 2.
3. Be sure to connect (+) and (–), and (A) and (B) correctly.
4. Wire I/O leads in separate ducts from power leads to prevent noise problems.
5. A voltage of 24 VDC is used for the voltage output, current output and Data Setting Console power supply. (The power for the transistor output is supplied from the output connector.)

6. The terminal block is removable. Make sure that it is attached correctly after the input wiring connections are completed.

Terminal Block Connections

Tighten the terminal block screws to a torque of 0.8 N • m.

Crimp Terminals

The screws on the terminal block are M3.5 self-rising terminal screws. Use the following types of M3.5 crimp terminals.

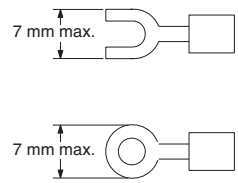

Soldered Lead

Strip insulation from 7 to 10 mm at the end of the wire and carefully solder the lead.

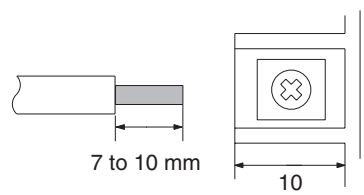

Compensating Conductors

Connect a thermocouple with the appropriate compensating conductor from the table below.

Type of thermocouple		Compensating conductor		Classification by application and tolerance	Constituent materials	
Symbol	Previous symbol (reference)	Symbol	Previous symbol (reference)		+ conductor	– conductor
B	---	BX-G	---	General-purpose, standard class	Copper	Copper
R	---	RX-G, SX-G	---			Alloy with copper or nickel as major constituent
S	---	RX-H, SX-H	---	Heat-resistant, standard class		
K	CA	KX-G	WCA-G	General-purpose, standard class	Alloy with nickel or chrome as major constituent	Alloy with nickel as major constituent
		KX-GS	WCA-GS			
		KX-H	WCA-H	Heat-resistant, standard class		
		KX-HS	WCA-HS	Heat-resistant, precision class		
		WX-G	WCA-G	General-purpose, standard class	Iron	Alloy with copper or nickel as major constituent
		WX-H	WCA-H	Heat-resistant, standard class		
		VX-G	WCA-G	General-purpose, standard class	Copper	
E	CRC	EX-G	WCRC-G	General-purpose, standard class	Alloy with nickel or chrome as major constituent	
		EX-H	WCRC-H	Heat-resistant, standard class		
J	IC	JX-G	WIC-G	General-purpose, standard class	Iron	
		JX-H	WIC-H	Heat-resistant, standard class		

Type of thermocouple		Compensating conductor		Classification by application and tolerance	Constituent materials	
Symbol	**Previous symbol (reference)**	**Symbol**	**Previous symbol (reference)**		**+ conductor**	**– conductor**
T	CC	TX-G	WCC-G	General-purpose, standard class	Copper	Alloy with copper or nickel as major constituent
		TX-GS	---	General-purpose, precision class		
		TX-H	WCC-H	Heat-resistant, standard class		
		TX-HS	---	Heat-resistant, precision class		

Wiring Platinum Resistance Thermometers

Connect a platinum resistance thermometer with copper wire. All three leads should have the same thickness and the same length to give them identical resistances. Do not branch the two (B) leads near the terminal block as this increases measurement errors.

Current Transformer

Use an E54-CT1 or E54-CT3 Current Transformer (CT). Refer to *Appendix C Heater Burnout Detection* for details of the Current Transformer specifications and installation dimensions.

2-3-2 Output Wiring

Connection Diagrams

C200H-TC□01 Transistor Output

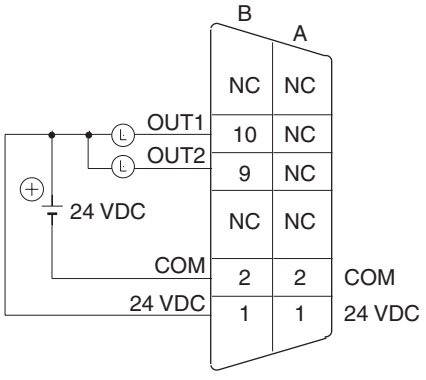

NC: Not connected
The pairs of terminals B2 to A2 and B1 to A1 are shorted internally. Always supply power to the 24-VDC terminal (B1) as this drives the internal circuits.

C200H-TC□02/TC□03 Voltage/Current Output

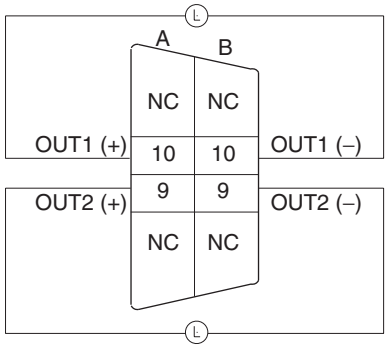

Circuit Diagrams

C200H-TC□01 Transistor Output

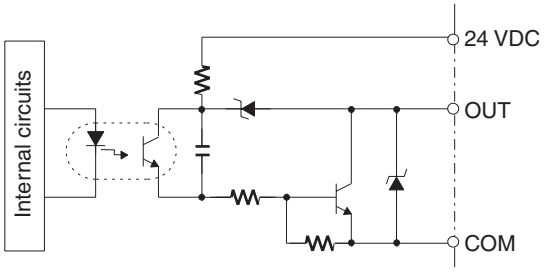

C200H-TC□02 Voltage Output

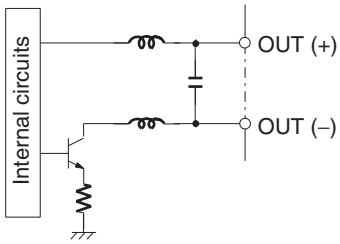

C200H-TC□03 Current Output

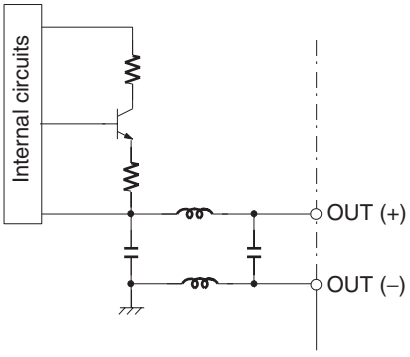

Applicable Connectors

The following connector set manufactured by Fujitsu is included with the Unit:
FCN-361J032-AU (soldering connector)
FCN-360C032-B (cover)

Connector Wiring Precautions

After soldering the lead to each pin, insulate with heat-shrink tube to prevent shorting with the adjacent terminal.

Connection Precautions

Tighten the screws after inserting the connector into the Unit. Push the connector firmly into the Remote I/O Terminal or Connector Terminal Block Converter Unit until it fully locks.

Output Cable

The output cables in the table below are recommended.

Model	Cable length (L)
ES1000-CA021-102	1 m
ES1000-CA021-202	2 m

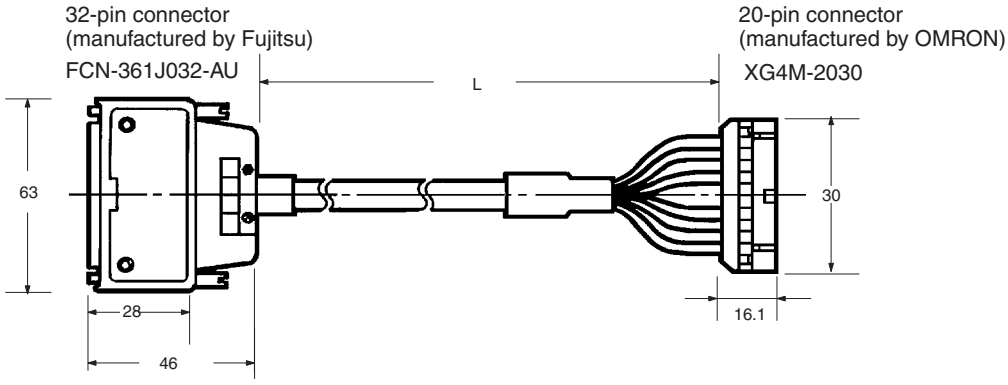

Wiring Diagrams

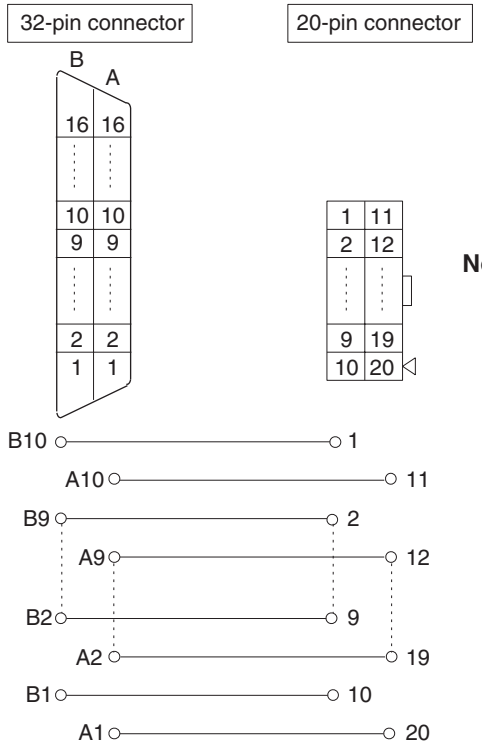

Note The pin numbers of the 20-pin connector are marked for convenience. Refer to them from the Δ mark.

Remote I/O Terminal

Remote I/O Terminal in the table below is recommended for transistor output.

Model	Specification	Relays used
G7TC-OC08	Common (+)	8 x G7T-1112S (max. resistive load: 220 VAC, 2A)

Note One P7TF-OS08 I/O Terminal and two G7T-1112S Relays may be purchased separately and used.

Wiring Diagram

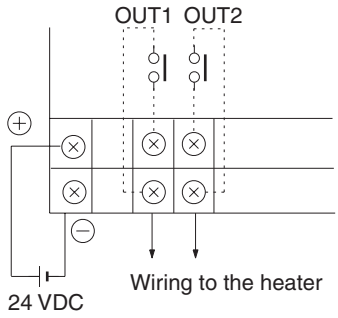

External View

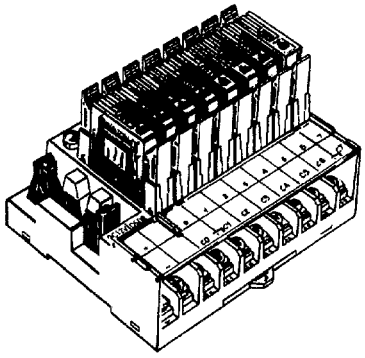

Connector Terminal Block Converter Unit

The Connector Terminal Block Converter Units in the table below are recommended for voltage output and current output type.

Model	Terminal screw size
XW2B-20G4	M 2.4
XW2B-20G5	M 3.5

External View

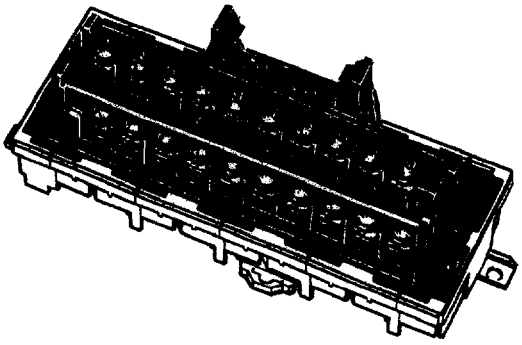

2-3-3 Data Setting Console Cables

Connecting Cable

Use the connecting cables in the table below (sold separately) to connect the Unit to the Data Setting Console.

Model	Cable length (L)
C200H-CN225	2 m
C200H-CN425	4 m

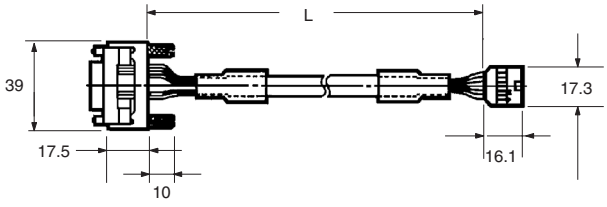

Connection Precautions

1,2,3...

1. Tighten the lock screws after inserting the connector into the Unit.
2. Push the connector firmly into the Data Setting Console until the clips fully lock.
3. Power is supplied through the connecting cable from the Temperature Control Unit. Nothing appears on the Data Setting Console display if no power is supplied to input terminals A8 and A9 of the Temperature Control Unit.
4. Install the supplied connector cover when the cable is not connected.

SECTION 3
Data Setting Console Operation

This section provides the basic operating procedures of the Data Setting Console including parameter settings and displays.

3-1 Operating Procedure 22
3-2 Data Flow 23
3-3 Nomenclature and Features. 24
3-3-1 Nomenclature 24
3-3-2 Features. 25
3-4 Parameter Displays and Settings. 26
3-4-1 Table of Parameters 26
3-4-2 How to Display and Set Parameter Data 28

3-1 Operating Procedure

After preparing the CPU Unit, follow the procedure below to use the Temperature Control Unit.

1,2,3...

1. Set the switches on the front and rear panels according to the operating conditions. (Refer to *2-2 Switch Settings.*)

   Set SW2-2 under the display cover to the OFF position to enable data setting from the Data Setting Console.

2. Mount to Rack.

   Turn OFF the PC power supply before mounting or dismounting the C200H on the Rack.

3. Connect the input wiring. (Refer to *2-3 Wiring.*)

   The 24-VDC power supply must be connected. The Data Setting Console will not operate unless the 24-VDC power supply is connected. The sensors can be connected immediately before the system is tested.

4. Connect the Data Setting Console. (Refer to *2-3-3 Data Setting Console Cables*.)

5. Turn ON the 24-VDC power supply and the PC power supply.

   Set the CPU Unit to PROGRAM mode.

6. Set data from the Data Setting Console. (Refer to the rest of this section.)

   Under either one of the following conditions (i.e., when control is stopped), the bank number can be changed to set data using the Data Setting Console.

   - When SW203-5 on the rear panel is set to ON (to stop temperature control in PROGRAM mode) and the CPU Unit is set to PROGRAM mode.
   - When the Stop Bit (word n+2, bit 06 for loop 1 and bit 04 for loop 2) is ON.

   In all other cases, the executed bank number (default value = 1) is displayed and the bank number cannot be changed from the Data Setting Console. Change the executed bank number with a user program or with a device, such as the Programming Console.

7. Test operation and adjust data. (Refer to the rest of this section.)

   Connect the output wiring and turn on the heater power to start the test operation. Monitor the control conditions and adjust the data until the required control is achieved.

8. Create the user programs. (Refer to *SECTION 4 PC Memory Allocation and Programming.*)

   Create the user programs for data setting, monitoring, and switching the bank number, as required. Set SW2-2 under the display cover to the ON position to enable data setting from the CPU Unit.

9. Start operation.

3-2 Data Flow

The data flow in the Temperature Control Unit is shown in the diagram below.

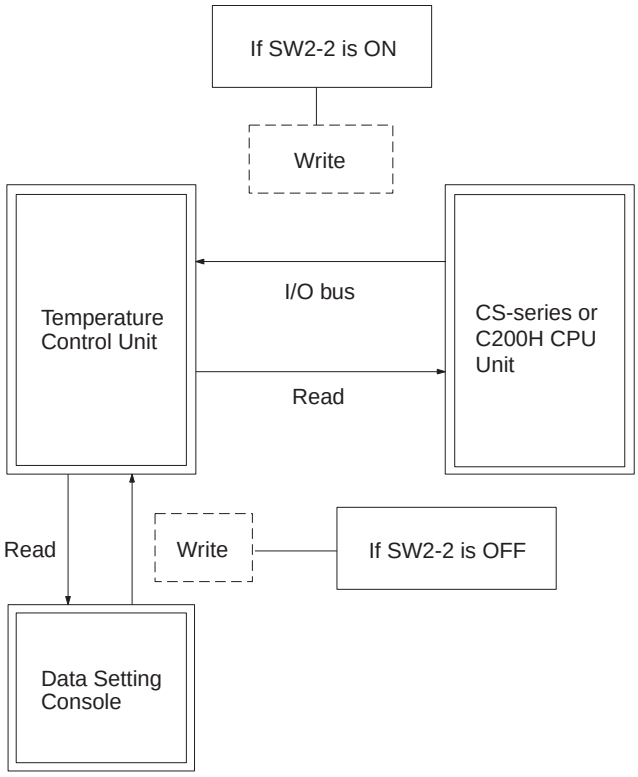

The read operation and setting the executed bank number are possible from a user program or from a device, such as the Programming Console, regardless of the ON/OFF setting of SW2-2.

Data written from the Data Setting Console and data written with the EEPROM write commands when SW2-1 (switching memory contents) is set to Normal are written to the Temperature Control Unit EEPROM and are consequently retained when the power supply is turned OFF.

Data written with RAM write commands when SW2-1 (switching memory contents) is set to Normal, the SP value set when SW2-1 (switching memory contents) is set to Fixed and executed bank number settings made from the CPU Unit are written directly to RAM and are not saved to EEPROM. This data is lost when the power supply is turned OFF.

Data Settings from Data Setting Console

Set SW2-2 under the display cover to the OFF position to enable data setting from the Data Setting Console.

While Temperature Control Unit is in control operation, all data can be set using the specified executed bank number (default value = 1).

Change the executed bank number with a user program or with a device, such as the Programming Console. The executed bank number cannot be changed from the Data Setting Console.

Under either one of the following conditions (i.e., when control is stopped), the bank number can be changed to set data using the Data Setting Console.

- When SW203-5 on the rear panel is set to ON (to stop temperature control in the PROGRAM mode) and the CPU Unit is set to PROGRAM mode.

- When the Stop Bit (word n+2, bit 06 for Loop 1 and bit 04 for Loop 2) is ON.

3-3 Nomenclature and Features

3-3-1 Nomenclature

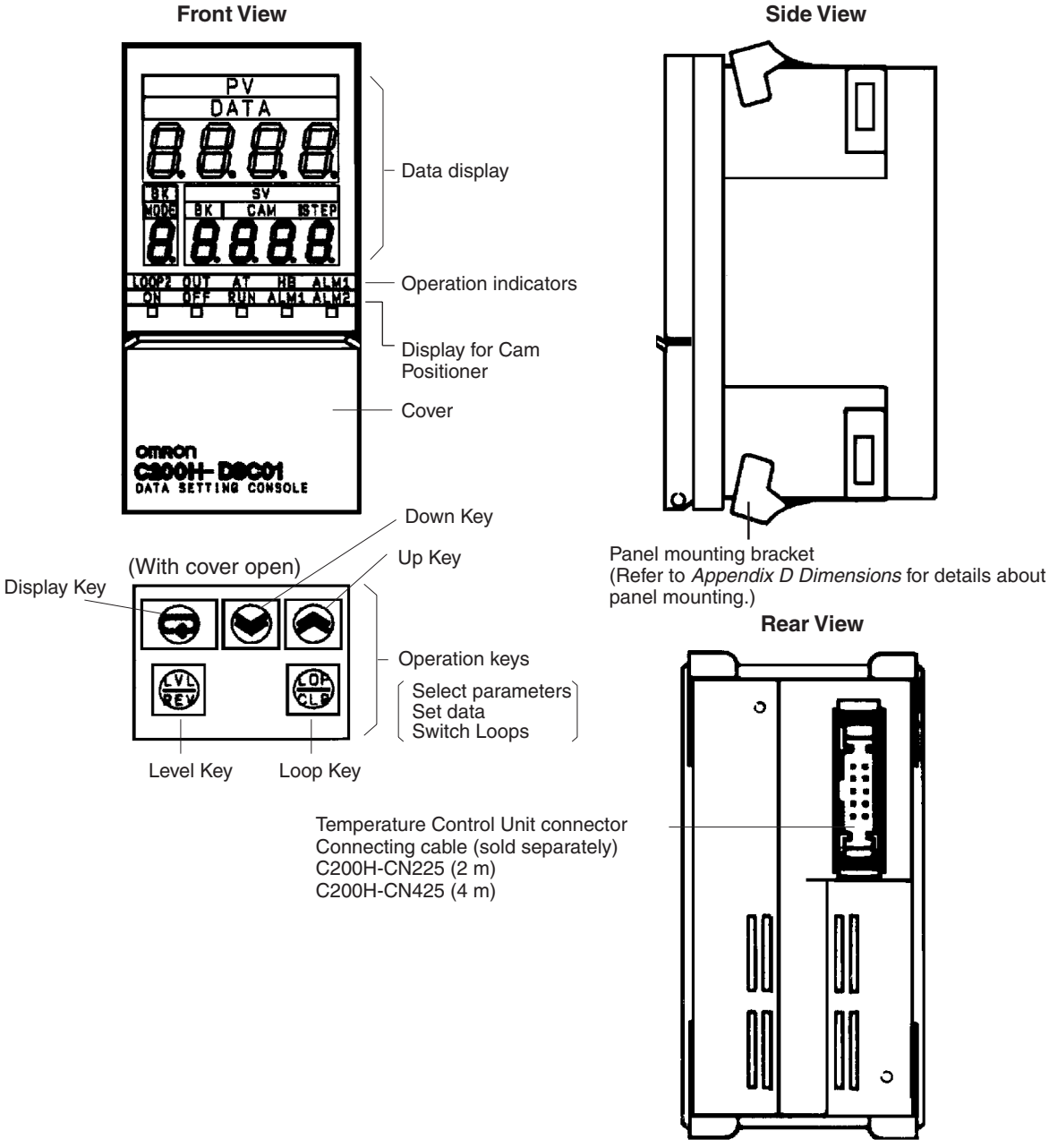

The bottom row of the operation keys have upper and lower labels. The upper labels apply to Temperature Control Unit operation. The lower labels are for the Cam Positioner Unit.

Two display sheets are supplied: one for the Temperature Control Unit and one for the Cam Positioner Unit. If the Data Setting Console is to be used with the Temperature Control Unit only, stick the display sheet for the Temperature Control Unit.

Note The Data Setting Console will not operate unless a 24-VDC power supply is connected to the Temperature Control Unit input terminals.

3-3-2 Features

Data Display

Name	Function
PV (Process Value)	Displays the PV or the parameter symbol selected with the Level or Display Key (Refer to next page).
SV (Set Value)	Displays the SV or setting/monitored data corresponding to the parameter symbol selected with the Level, Display or Loop Keys and indicated in the PV display. Displays the SP when the PV is indicated in the PV display.
BK (Bank Number)	Displays the executed bank number. Displays the bank number of the displayed data when temperature control is interrupted. (See note.)

Note Temperature control is interrupted when SW203-5 on the rear panel is set to ON and also the CPU Unit is set to PROGRAM mode, or when the Stop Bit (word n+2, bit 06 for loop 1 and bit 04 for loop 2) is ON.

Operation Indicators

Name	Function	
LOOP2	Indicates whether the displayed settings relate to Loop 1 or Loop 2. Press the Loop Key and hold down for approximately 2 seconds to switch between Loop 1 and Loop 2. Indicator OFF:Loop 1 Indicator ON: Loop 2	
OUT (Output)	Turns ON when the output is ON for transistor output or voltage output types.	These indicators relate to the currently displayed loop.
AT (Auto-tuning)	Blinks at approximately 1 second intervals during auto-tuning.	
HB (Heater Burnout)	Turns ON to indicate a heater burnout alarm.	
ALM1 (Alarm)	Turns ON to indicate the temperature is in the alarm range set with Alarm SV 1 (upper- and lower-limit alarm). Refer to the following page.	

Display Patterns

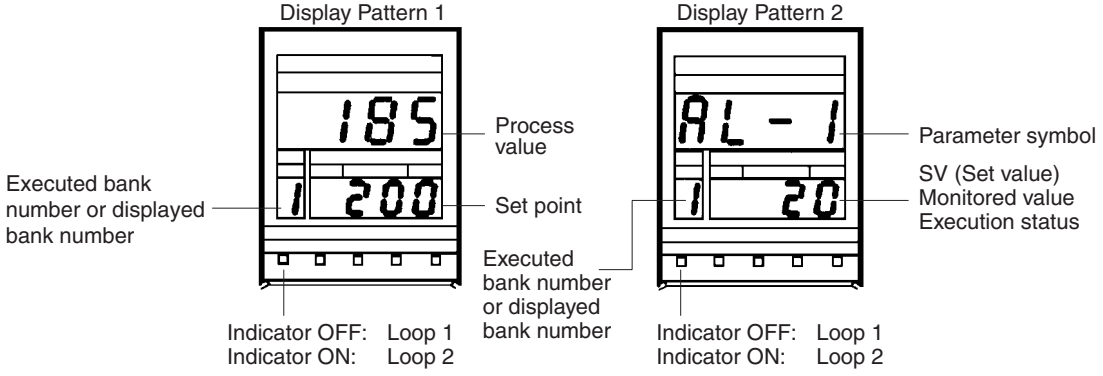

Operation Keys

Name	Function
Level Key	The parameter items are divided into three display groups (Refer to display levels 0 to 2 on the next page). Press this key to switch from one group to another. The display levels automatically cycle in the sequence 0 –> 1 –> 2 –> 0 when the key is held down for approximately 2 seconds.
Display Key	Press this key to select the required parameter from the selected display level 0 to 2 (Refer to table below). The parameters cycle automatically when the key is held down.
Loop Key	Press this key for approximately two seconds to switch between Loop 1 and Loop 2.
Up Key	Press this key to increment SV. The SV increment continuously while the key is held down. The SV display blinks when the value reaches its maximum limit.
Down Key	Press this key to decrement an SV. The SV decreases continuously while the key is held down. The SV display blinks when the value reaches its minimum limit.

3-4 Parameter Displays and Settings

3-4-1 Table of Parameters

Display level	Parameter	Display symbol	Write	Read	Loop no.	Bank no.	Data range	Default value	Page
0	Set point	---	Yes	Yes	Yes	Yes	SP lower limit to SP upper limit	0°C	28
	Bank number	bN	See note 5	Yes	Yes	No	1 to 8	1	32
	Alarm SV 1 (see note 4)	AL-1	Yes	Yes	Yes	Yes	Alarm mode TC 1, 4, 5: 0° to 9999°C Other TCs: –999° to 9999°C Pt 1, 4, 5: 0.0° to 999.9°C Other Pts: –99.9° to 999.9°C	0°C	29
	Alarm SV 2 (see note 4)	AL-2	Yes	Yes	Yes	Yes		0°C	
	Input shift value	In-S	Yes	Yes	Yes	Yes	–99.9° to 999.9°C	0.0°C	31
	Proportional band (see note 1)	P	Yes	Yes	Yes	Yes	0.0° to 999.9°C	40.0°C	33
	Integral (reset) time (see note 1)	I	Yes	Yes	Yes	Yes	0 to 9999 s	240 s	
	Derivative (rate) time (see note 1)	d	Yes	Yes	Yes	Yes	0 to 9999 s	40 s	
1	SP lower limit	SL-L	Yes	Yes	Yes	No	Sensor measuring range lower limit to (SP upper limit – 1 digit)	TC: –200°C Pt: –99.9°C	28
	SP upper limit	SL-H	Yes	Yes	Yes	No	(Sensor measuring range lower limit + 1 digit) to SP upper limit	TC: 1,300°C Pt: 450.0°C	28

Display level	Parameter	Display symbol	Write	Read	Loop no.	Bank no.	Data range	Default value	Page
1	Control period (see note 1 and 3)	CP	Yes	Yes	Yes	No	1 to 99 s	20 s	31
	Hysteresis (see note 2)	HYS	Yes	Yes	Yes	Yes	0.0° to 999.9°C	0.8°C	
	Alarm hysteresis (see note 4)	HYSA	Yes	Yes	Yes	No	0.0° to 999.9°C	0.2°C	30
	Heater current monitor (see note 3)	CT	No	Yes	Yes	No	0.0 to 5.5 A	---	31
	Heater burnout current (see note 3)	HB	Yes	Yes	Yes	No	0.0 to 5.0 0.0: No heater burnout detection, alarm signal OFF 5.0: No heater burnout detection, alarm signal ON	0.0 A	
2	Control output variable monitor	$\bar{o}$	No	Yes	Yes	No	0.0% to 100.0%	---	31
	Auto-tuning start/ stop (see note 1)	AT	Yes	Yes	Yes	No	---	---	33
	Copy bank	bCPY	Yes	Yes	Yes	No	---	---	32
	Sensor-type monitor	$\bar{c}$n-t	No	Yes	No	No	0 to 9	Setting for SW202	
	Alarm 1 mode	ALT1	Yes	Yes	Yes	No	0 to 9 Mode for Alarm SV 1/2 (0: no alarm)	2	29
	Alarm 2 mode	ALT2	Yes	Yes	Yes	No		2	

Yes: Possible.
No: Not possible or not required.

Note

1. Only when PID control with feed-forward circuitry is selected
2. Only when ON/OFF control is selected.
3. Does not apply to current output.
4. Does not apply when Alarm Mode = 0
5. Under either one of the following conditions (i.e., when control is stopped), the bank number can be changed to set data using the Data Setting Console.
   - When SW203-5 on the rear panel is set to ON (to stop temperature control in the PROGRAM mode) and the CPU Unit is set to PROGRAM mode.
   - When the Stop Bit (word n+2, bit 06 for loop 1 and bit 04 for loop 2) is ON.

   In all other cases, the executed bank number (default value = 1) is displayed and the bank number cannot be changed from the Data Setting Console. Change the executed bank number with a user program or with a device, such as the Programming Console.
6. Thermocouple = TC
   Platinum Resistance Thermometer = Pt

3-4-2 How to Display and Set Parameter Data

PV and SV (Display Level 0)

--- Process value (monitored every 500 ms)

--- Currently set set value. Units: °C or °F. The SV can be changed from this display.

Valid SV Range

Set the SV in the range between the SV lower limit and the SV upper limit.

Error Display

When a sensor error occurs, one of the codes below and the detected temperature blink alternately in the PV display.

SEr 1	Temperature is out of the range: (sensor measurement range ± 10%FS). That is, 10%FS below the lower limit or 10%FS above the upper limit. Includes broken or incorrect sensor wiring. SEr 1 : Loop 1; SEr2 : Loop 2
SEr2	
SErr	Abnormality in the cold junction compensating circuit. Applies to thermocouple type only.

SP Lower Limit (Display Level 1)

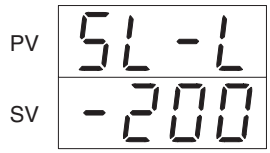

--- SP lower limit parameter symbol

--- Currently set SV lower limit. Units: °C or °F. The SV lower limit can be changed from this display.

When the sensor type is set with SW202 on the rear of the Unit, the SV lower limit is automatically set to the measuring range lower limit of the selected sensor, as shown below. However, the SP lower limit cannot be changed if the current SV lies inside the sensor measuring range.

Default values TC: –200 °C
Pt: –99.9 °C

Change the set limit, if required. Set the lower limit in the following range:
Sensor measuring range lower limit to (SP upper limit – 1 digit)

The SV and "----" blink alternately on the display if the SP lower limit is set outside the limit defined above to indicate that the value is out-of-range. Reset the SP lower limit inside the permitted range.

SP Upper Limit (Display Level 1)

--- SP upper limit parameter symbol

--- Currently set SV upper limit. Units: °C or °F. The SV upper limit can be changed from this display.

When the sensor type is set with SW202 on the rear of the Unit, the SV upper limit is automatically set to the measuring range upper limit of the selected sensor, as shown below. However, the SP upper limit cannot be changed if the current SV lies inside the sensor measuring range.

Default values TC: 1300 °C
Pt: 450.0 °C

Change the set limit, if required. Set the upper limit in the following range:
(Sensor measuring range lower limit + 1 digit) to SP upper limit

The SV and "----" blink alternately on the display if the SP upper limit is set outside the limit defined above to indicate that the value is out-of-range. Reset the SP upper limit inside the permitted range.

Alarms SV 1 and SV 2 (Display Level 0)

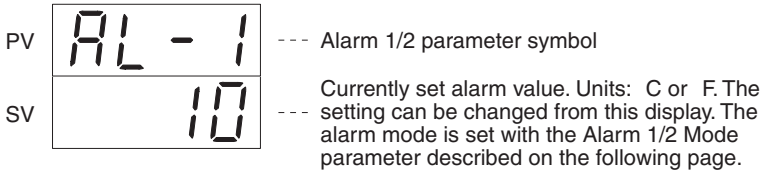

Two alarm SVs can be set for each loop and bank.

Alarm 1 and Alarm 2 Modes (Display Level 2)

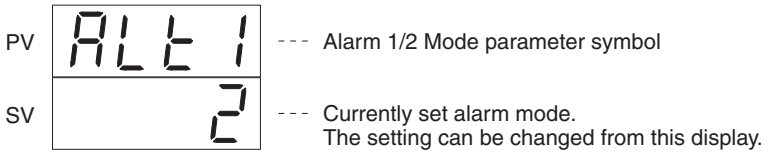

Two alarm modes can be set for each loop.

Alarm Mode	Alarm Type	Alarm Range (0 – SP)
0	No alarm	
1	Upper- and lower-limit alarm	
2	Upper-limit alarm	
3	Lower-limit alarm	
4	Upper- and lower-limit range alarm	
5	Upper- and lower-limit alarm with standby sequence	
6	Upper-limit alarm with standby sequence	
7	Lower-limit alarm with standby sequence	
8	Absolute-value upper-limit alarm	
9	Absolute-value lower-limit alarm	

About the Standby Sequence

Select the standby sequence to avoid an alarm output immediately after power is turned ON where the value is in the alarm range. The standby sequence recognizes that the value is out of the alarm range and then outputs an alarm when the value enters the alarm range once more.

Lower Limit Alarm with Standby Sequence

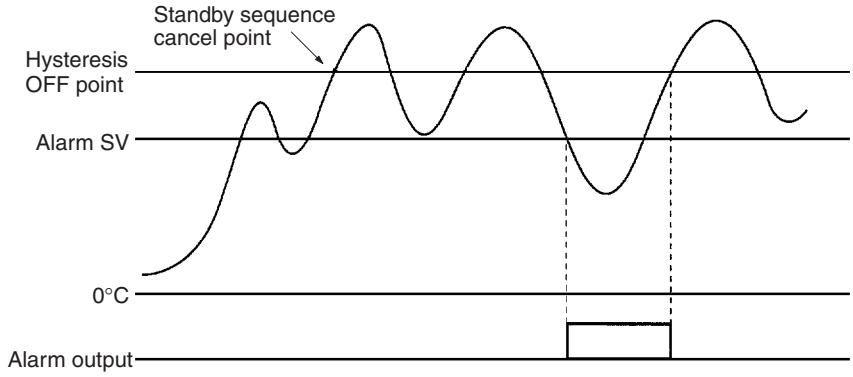

The standby sequence is restarted in the following situations.

- When SV is changed.
- When executed bank number is changed.
- When alarm mode is changed.
- When PC power supply is turned ON.
- When restart flag is set ON.
- When PROGRAM mode is switched to MONITOR or RUN while the control interrupt is set (SW203-5 is ON).
- When the Stop Bit (word n+2, bit 06 or 04) goes OFF.

Alarm Hysteresis (Display Level 1)

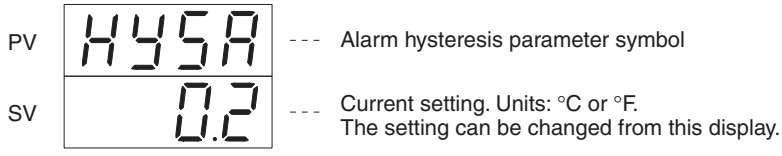

A hysteresis band is provided to prevent chattering of the alarm output when the alarm output is turned from ON to OFF.

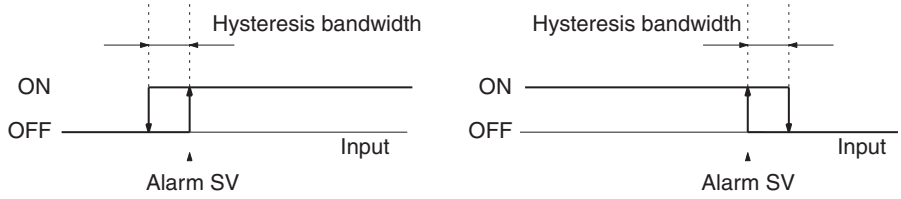

The alarm output is OFF if the process value lies within the hysteresis band when the Unit is turned on.

Heater Burnout Current (Display Level 1)

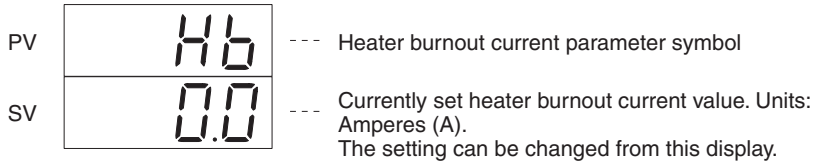

Set the heater burnout current value in the range shown in the table below. Refer to *Appendix C Heater Burnout Detection* for more details about the alarm SVs.

0.0	No heater burnout detection. Alarm signal OFF.
0.1 to 4.9	Within heater burnout current SV range.
5.0	No heater burnout detection. Alarm signal ON.

Heater Current Monitor (Display Level 1)

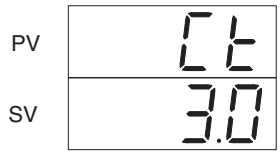

--- Heater current monitor parameter symbol

--- Currently set heater current value. Units: Amperes (A). If the current exceeds 5.5 A, a CT Input Overflow error occurs and FFFF is displayed.

Input Shift Value (Display Level 0)

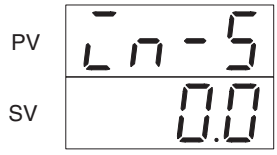

--- Input shift value parameter symbol

--- Currently set input shift value. Units: °C or °F. The setting can be changed from this display.

If the displayed temperature value differs from the actual temperature value due to the sensor position or some other conditions, set the input shift value such that the correct temperature is displayed.

Control Period (Display Level 1)

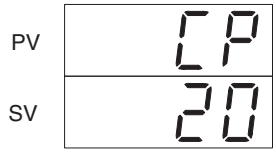

--- Control period parameter symbol

--- Currently set control period. Units: Seconds (s). The setting can be changed from this display.

The control period is the time required to complete one transistor output or voltage output ON/OFF cycle.

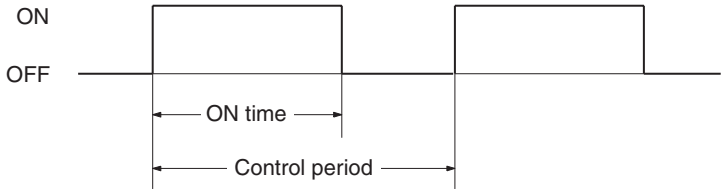

Control Output Variable Monitor (Display Level 2)

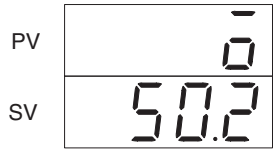

--- Control output variable monitor parameter symbol

--- Current control output variable. Units: percentage (%).

The relationship between the control output variable and control period is defined by the formula below:

$$\text{Control output variable (\%)} = \frac{\text{ON time}}{\text{Control period}} \times 100$$

The control output variable during ON/OFF control (when SW203-1 on the rear panel is ON) is ON = 100% and OFF = 0%.

Hysteresis (Display Level 1)

--- Hysteresis parameter symbol

--- Currently set hysteresis value. Units: °C or °F. The setting can be changed from this display.

Hysteresis is an operating band provided for ON/OFF operation to prevent output chattering (repeated ON/OFF switching) and eliminate noise influences.

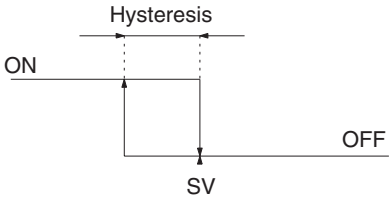

Hysteresis is applied in the following situations.

- When ON/OFF control is selected (SW203-1 is ON).
- When PID control with feed-forward circuitry (SW203-1 is OFF) and P (proportional band) is 0.

Bank Number (Display Level 0)

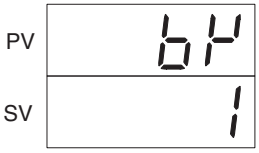

--- Bank number parameter symbol

--- Currently set bank number.
During control operation: Executed bank number (default value = 1)
Control operation interrupted: Currently displayed bank number

Changing the Settings

The bank number can be changed from the Data Setting Console in the following situations.

- When the CPU Unit is set to PROGRAM mode and SW203-5 on the rear panel is set to ON to interrupt temperature control.
- When the Stop Bit (word n+2, bit 06 for loop 1 or bit 04 for loop 2) is ON.

When the above conditions are not met, the executed bank number cannot be changed from the Data Setting Console and the executed bank number (default value = 1) is displayed. Change the executed bank number with a user program or with a device, such as the Programming Console.

Copy Bank (Display Level 2)

Copies the data, except for the SV (set value) data, from bank number 1 to banks 2 to 8.

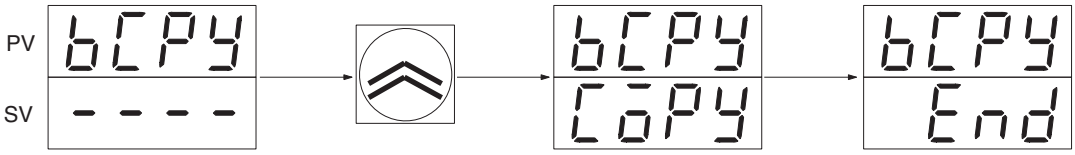

Execute bank copy — Bank being copied — Bank copy completed

Sensor-type Monitor (Display Level 2)

--- Sensor-type monitor parameter symbol

--- Sensor type currently set with SW202 on the rear panel. Number refers to the following if a platinum resistance thermometer is used:
0: JPt (OFF), 1: Pt (ON)

Auto-tuning Start/Stop (Display Level 2)

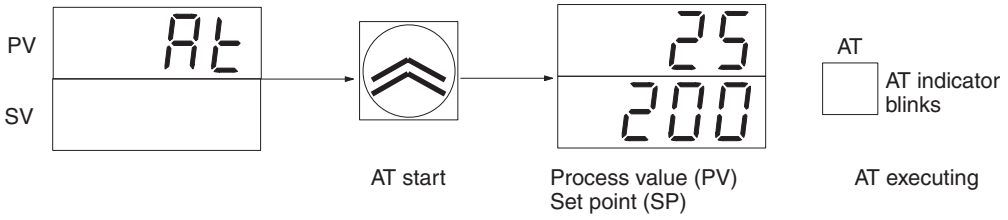

To interrupt, press the Level and Display Keys again to display At. When At appears, press the Up Key. On interrupt, the At display disappears and the process value is displayed.

Auto-tuning operates only when SW203-1 on the rear panel is set to OFF to enable PID control with feed-forward circuitry. When auto-tuning is completed, the AT indicator stops blinking and the P, I, and D data is written to EEPROM. If necessary, the P, I, and D data can be changed as described in the following.

Proportional Band (Display Level 0)

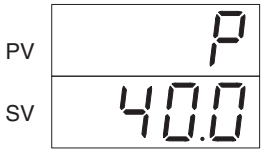

--- Proportional Band parameter symbol

--- Currently set Proportional Band. Units: °C or °F. The setting can be changed from this display.

Integral (Reset) Time (Display Level 0)

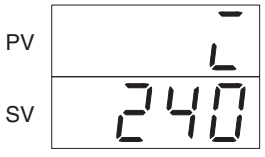

--- Integral time parameter symbol

--- Currently set integral time. Units: second. The setting can be changed from this display.

Derivative (Rate) Time (Display Level 0)

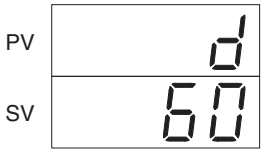

--- Derivative time parameter symbol

--- Currently set derivative time. Units: second. The setting can be changed from this display.

SECTION 4
PC Memory Allocation and Programming

This section provides the C200H PC's memory allocation for the Temperature Control Unit. Basic programming procedures and examples are also provided.

4-1 Memory Allocation 36
4-1-1 Memory Allocation Table 37
4-1-2 Memory Contents 38
4-1-3 Table of Commands 41
4-2 Data Flow 44
4-3 Programming 44
4-3-1 C200HX/HG/HE, C200HS, C200H 44
4-3-2 CS Series 51
4-3-3 Operation Timing 58
4-3-4 I/O Refresh 59

4-1 Memory Allocation

Memory Allocation

The Temperature Control Unit is allocated 10 words in the IR or CIO Area according to the unit number switch setting on the front of the Unit. These words are used as an I/O refresh data area. The IR or CIO Area words used by the Temperature Control Unit are refreshed each I/O refresh scan of the CPU Unit.

CS Series

CIO area

Unit#0	CIO 2000 to CIO 2009
Unit#1	CIO 2010 to CIO 2019
Unit#2	CIO 2020 to CIO 2029
Unit#3	CIO 2030 to CIO 2039
Unit#4	CIO 2040 to CIO 2049
Unit#5	CIO 2050 to CIO 2059
Unit#6	CIO 2060 to CIO 2069
Unit#7	CIO 2070 to CIO 2079
Unit#8	CIO 2080 to CIO 2089
Unit#9	CIO 2090 to CIO 2099

During PC I/O refresh, each scan is executed for the outputs (PC to Temperature Control Unit) followed by the inputs (Temperature Control Unit to PC).

Temperature Control Unit

I/O refresh data area

Wd (n) to Wd (n+2)	Output refresh
Wd (n+3) to Wd (n+9)	Input refresh

(n=2000 + 10 x Unit number)

The terms "output" and 'input" are defined from the CPU Unit.

C200HX/HG/HE, C200HS, or C200H

IR area

Unit#0	IR 100 to IR 109
Unit#1	IR 110 to IR 119
Unit#2	IR 120 to IR 129
Unit#3	IR 130 to IR 139
Unit#4	IR 140 to IR 149
Unit#5	IR 150 to IR 159
Unit#6	IR 160 to IR 169
Unit#7	IR 170 to IR 179
Unit#8	IR 180 to IR 189
Unit#9	IR 190 to IR 199

During PC I/O refresh, each scan is executed for the outputs (PC to Temperature Control Unit) followed by the inputs (Temperature Control Unit to PC).

Temperature Control Unit

I/O refresh data area

Wd (n) to Wd (n+2)	Output refresh
Wd (n+3) to Wd (n+9)	Input refresh

(n=100 + 10 x Unit number)

The terms "output" and "input" are defined from the CPU Unit.

Note A Duplicate I/O Unit error occurs if the set Unit number corresponds to the number of an existing Special I/O Unit.

Selecting Allocated Data

The data allocated to each IR word due to the Unit number setting is determined by the setting of SW2-1 on the front of the Unit.

ON	Normal	All data can be set using commands.
OFF	Fixed	Fixed data is allocated to memory. Direct reading and writing of data is possible.

This setting becomes valid immediately after the switch is set.

4-1-1 Memory Allocation Table

SW2-1 Set for Fixed Memory Allocations

(CS Series: n=2000+10 x Unit number)
(C200HX/HG/HE, C200HS, C200H: n=100 + 10 x Unit number)

I/O	Word	Bit															
		15	14	13	12	11	10	09	08	07	06	05	04	03	02	01	00
Output	n	Loop 1 SP (see note)															
	n+1	Loop 2 SP (see note)															
	n+2	Loop 1 executed bank number				Loop 2 executed bank number				Loop 1		Loop 2		0			
										0	Stop	0	Stop				
Input	n+3	Loop 1 PV (see note)															
	n+4	Loop 2 PV (see note)															
	n+5	Loop 1 SP (see note)															
	n+6	Loop 2 SP (see note)															
	n+7	Loop 1 executed bank number				Loop 2 executed bank number				0				0	0	SW data	
																2-2	2-1
	n+8	Loop 1 status data															
		0	Sen-sor error	CT over-flow	0	0	0	0	STOP	0	0	0	Con-trol out-put	AT	HB	AL1	AL2
	n+9	Loop 2 status data															
		0	Sen-sor error	CT over-flow	0	0	0	0	STOP	0	0	0	Con-trol out-put	AT	HB	AL1	AL2

Note For four-digit BCD and platinum resistance thermometer data, the least significant digit = 0.1, and the most significant digit (F) = minus (–). For example, “F200” represents –20.0°C for a platinum resistance thermometer.

SW2-1 Set for Normal Memory Allocations

(CS Series: n=2000+10 x Unit number)
(C200HX/HG/HE, C200HS, C200H: n=100 + 10 x Unit number)

I/O	Word	Bit															
		15	14	13	12	11	10	09	08	07	06	05	04	03	02	01	00
Output	n	Read/write instruction															
		Read/write		Loop no.		Bank no.				Instruction							
	n+1	Write data (see note)															
	n+2	Loop 1 executed bank number				Loop 2 executed bank number				Loop 1		Loop 2		0	0	0	Write request
										0	STOP	0	STOP				

I/O	Word	Bit															
		15	14	13	12	11	10	09	08	07	06	05	04	03	02	01	00
Input	n+3	Loop 1 PV (see note)															
	n+4	Loop 2 PV (see note)															
	n+5	Read data															
	n+6	0				Write error	0	0	Write com-plete	0				0	0	0	Read com-plete
	n+7	Loop 1 executed bank number				Loop 2 executed bank number				0				0	0	SW data	
																2-2	2-1
	n+8	Loop 1 status data															
		0	Sen-sor error	CT over-flow	0	0	0	0	STOP	0	0	0	Con-trol out-put	AT	HB	AL1	AL2
	n+9	Loop 2 status data															
		0	Sen-sor error	CT over-flow	0	0	0	0	STOP	0	0	0	Con-trol out-put	AT	HB	AL1	AL2

Note For four-digit BCD and platinum resistance thermometer data, the least significant digit = 0.1, and the most significant digit (F) = minus (–). For example, “1000” represents 100.0°C for a platinum resistance thermometer.

4-1-2 Memory Contents

SW2-1 Set for Fixed Memory Allocations

(CS Series: n=2000+10 x Unit number)
(C200HX/HG/HE, C200HS, C200H: n=100 + 10 x Unit number)

I/O	Address		Data item	Data contents
	Word	Bit		
Output	n	15 to 00	Loop 1 SP	Sets the Loop 1 and Loop 2 SP (set point) as 4-digit BCD data. For platinum resistance thermometer data, the least significant digit is 0.1. Set the most significant digit to F for minus (–). These specified values apply to the bank number set with Wd (n+2) and can only be changed in RAM. (Refer *page 44*)
	n+1	15 to 00	Loop 2 SP	
	n+2	15 to 12	Loop 1 exe-cuted bank number	Sets the bank number executed for Loop 1 and Loop 2 as 1-digit BCD data. Set executed bank numbers from 1 to 8. If the value is set out of this range, the bank number reverts to the previous value (default value = 1).
		11 to 08	Loop 2 exe-cuted bank number	
		07	---	Not used. Set to 0.
		06	Loop 1 STOP	Bit set to 0 during temperature control of Loop 1 and set to 1 when the control stop is executed. This bit will not be available under the program mode with SW203-5 set to ON (same as the control stop).
		05	---	Not used. Set to 0.
		04	Loop 2 STOP	Bit set to 0 during temperature control of Loop 2 and set to 1 when the control stop is executed. This bit will not be available under the program mode with SW203-5 set to ON (same as the control stop).
		03 to 00	---	Not used. Set each bit to 0.

I/O	Address		Data item	Data contents	
	Word	Bit			
Input	n+3	15 to 00	Loop 1 PV	Outputs the Loop 1 and Loop 2 PV (process value) as 4-digit BCD data. For platinum resistance thermometer data, the least significant digit is 0.1. The most significant digit is F for minus (–).	
	n+4	15 to 00	Loop 2 PV		
	n+5	15 to 00	Loop 1 SP	Outputs the Loop 1 and Loop 2 SP (set point) as 4-digit BCD data. For platinum resistance thermometer data, the least significant digit is 0.1. The most significant digit is F for minus (–).	
	n+6	15 to 00	Loop 2 SP		
	n+7	15 to 12	Loop 1 executed bank number	Outputs the bank number currently executed for Loop 1 and Loop 2 as 1-digit BCD data. Executed bank numbers are from 1 to 8.	
		11 to 08	Loop 2 executed bank number		
		07 to 02	---	Not used. Each bit is set to 0.	
		01	SW2-2	Outputs the ON/OFF status of SW2-2 (setting direction). 0: Data Setting Console 1: CPU Unit	
		00	SW2-1	Outputs the ON/OFF status of SW2-1 (switching memory contents). 0: Fixed 1: Normal	
	n+8 Loop 1 n+9 Loop 2	15	---	Not used. Set to 0.	Loop 1/2 status data
		14	Sensor error	Bit set to 1 if the sensor is not connected, a sensor wire is broken, or the input data exceeds the operational temperature range.	
		13	CT overflow	Bit set to 1 when the detected heater current exceeds 5.5 A.	
		12 to 09	---	Not used. Each bit is set to 0.	
		08	STOP	Bit set to 0 during temperature control and set to 1 when the control stop is executed.	
		07 to 05	---	Not used. Each bit is set to 0.	
		04	Control output	Bit set to 1 when the control output (transistor or voltage output) is ON. The bit is always 0 for current output.	
		03	AT	Bit set to 1 during auto-tuning (AT).	
		02	HB	Bit set to 1 if the detected heater current drops below the set heater burnout current value. (HB: heater burnout)	
		01	AL1	Bit set to 1 when the temperature enters the set alarm range (Refer to page 25).	
		00	AL2		

Note If the setting direction of the Temperature Control Unit is set to the CPU Unit and the CPU Unit is in PROGRAM mode, all word data will be 0. Therefore, if the CPU Unit is in PROGRAM mode and has been set for continuous control, the Temperature Control Unit will continue executing temperature control even when the CPU Unit stops operating and will assume that the SP has been changed to 0°C. To prevent this, set SW2-2 on the Temperature Control Unit to OFF (i.e., the setting direction is set to the Data Setting Console) before the CPU Unit stops operating and reset SW2-2 after the CPU Unit restarts.

SW2-1 Set for Normal Memory Allocations

(CS Series: n=2000+10 x Unit number)
(C200HX/HG/HE, C200HS, C200H: n=100 + 10 x Unit number)

I/O	Address		Data item	Data contents	
	Word	Bit			
Output	n	15 and 14	Read/Write	The data bit sets operation to read or write. Write = 01 Read = 00	Read/Write command
		13 and 12	Loop no.	The data bit sets the Loop Number to which the read or write operation applies. Loop 1 = 01, Loop 2 = 10	
		11 to 08	Bank no.	Sets the bank number to which the read or write operation applies as 1-digit BCD data. Set executed bank numbers from 1 to 8.	
		07 to 00	Command	Sets the command code (Refer to page 41) for the read or write operation as 2-digit BCD data.	
	n+1	15 to 00	Write data	Set the SP for a write operation as 4-digit BCD data. For data including 0.1 units, the least significant digit represents 0.1. Set the most significant digit to F for minus (–). The write operation commences on the ON rising-edge of the write request flag (Wd (n+2), bit 00).	
	n+2	15 to 12	Loop 1 executed bank number	Set the bank number currently executed for Loop 1 and Loop 2 as 1-digit BCD data. Executed bank numbers are from 1 to 8. If the value is set out of this range, the bank number reverts to the previous value (default value = 1).	
		11 to 08	Loop 2 executed bank number		
		07	---	Not used. Set to 0.	
		06	Loop 1 STOP	Bit set to 0 during temperature control of Loop 1 and set to 1 when the control stop is executed. This bit will not be available under the program mode with SW203-5 set to ON (same as the control stop).	
		05	---	Not used. Set to 0.	
		04	Loop 2 STOP	Bit set to 0 during temperature control of Loop 2 and set to 1 when the control stop is executed. This bit will not be available under the program mode with SW203-5 set to ON (same as the control stop).	
		03 to 01	---	Not used. Set each bit to 0.	
		00	Write request	Turn this bit ON when writing the write data set with Wd (n+1) with the commands set to Wd (n). Turn this bit OFF after the write complete flag (Wd (n+6), bit 08) turns ON.	
Input	n+3	15 to 00	Loop 1 PV	Outputs the Loop 1 and Loop 2 PV (process value) as 4-digit BCD data. For platinum resistance thermometer data, the least significant digit is 0.1. Set the most significant digit to F for minus (–).	
	n+4	15 to 00	Loop 2 PV		
	n+5	15 to 00	Read data	Outputs the data read with the commands set with Wd (n). For data including 0.1 Units, the least significant digit represents 0.1. Set the most significant digit to F for minus (–).	
	n+6	15 to 12	---	Not used. Each bit is set to 0.	
		11	Write error	Bit set to 1 when the write data exceeds the set permissible range. The bit is automatically set to 0 on the OFF falling-edge of the write request flag (Wd (n+2), bit 00).	
		10 to 09	---	Not used. Each bit is set to 0.	
		08	Write complete	Bit set to 1 when the write operation due to the instructions set with Wd (n) ends normally. The bit is automatically set to 0 on the OFF falling-edge of the write request flag (Wd (n+2), bit 00).	

I/O	Address		Data item	Data contents	
	Word	Bit			
Input	n+6	07 to 01	---	Not used. Each bit is set to 0.	
		00	Read complete	Bit set to 1 when the read operation due to the commands set with Wd (n) ends normally. The bit is set to 0 when the command is changed.	
	n+7	15 to 12	Loop 1 executed bank number	Outputs the bank number currently executed for Loop 1 and Loop 2 as 1-digit BCD data. Executed bank numbers are from 1 to 8.	
		11 to 08	Loop 2 executed bank number		
		07 to 02	---	Not used. Each bit is set to 0.	
		01	SW2-2	Outputs the ON/OFF status of SW2-2 (setting direction). 0: Data Setting Console 1: CPU Unit	
		00	SW2-1	Outputs the ON/OFF status of SW2-1 (switching memory contents). 0: Fixed 1: Normal	
	n+8 Loop 1 n+9 Loop 2	15	---	Not used. Set to 0.	Loop 1/2 status data
		14	Sensor error	Bit set to 1 if the sensor is not connected, a sensor wire is broken, or the input data exceeds the operational temperature range.	
		13	CT overflow	Bit set to 1 when the detected heater current exceeds 5.5 A.	
		12 to 09	---	Not used. Each bit is set to 0.	
		08	STOP	Bit set to 0 during temperature control and set to 1 when the control stop is executed.	
		07 to 05	---	Not used. Each bit is set to 0.	
		04	Control output	Bit set to 1 when the control output (transistor or voltage output) is ON. The bit is always 0 for current output.	
		03	AT	Bit set to 1 during auto-tuning (AT).	
		02	HB	Bit set to 1 if the detected heater current drops below the set heater burnout current value. (HB: heater burnout)	
		01	AL1	Bit set to 1 when the temperature enters the set alarm range (Refer to page 25).	
		00	AL2		

4-1-3 Table of Commands

The command codes shown below are set in bits (n Wd) 07 to 00 when the SW2-1 (switching memory contents) on the front panel is set for normal memory allocations.

EEPROM Write/Read Command

Parameter	Command		Write	Read	Loop no.	Bank no.	Actual data range	Write/Read data range	Default value
Set point	0	0	Yes	Yes	Yes	Yes	SV lower limit to SV upper limit		0°C
Executed bank number	0	2	Yes	Yes	Yes	No	1 to 8		1

Parameter	Com-mand		Write	Read	Loop no.	Bank no.	Actual data range	Write/Read data range	Default value
Alarm SV 1 (see note 4)	0	3	Yes	Yes	Yes	Yes	Alarm mode TC 1, 4, 5: 0° to 9999°C Other TCs: –999° to 9999°C	0000 to 9999 F999 to 9999	0°C
Alarm SV 2 (see note 4)	0	4	Yes	Yes	Yes	Yes	Pt 1, 4, 5: 0.0° to 999.9°C Other Pts: –99.9° to 999.9°C	0000 to 9999 F999 to 9999	0°C
Input shift value	0	5	Yes	Yes	Yes	Yes	–99.9° to 999.9°C	F999 to 9999	0.0°C
Proportional band (see note 1)	0	6	Yes	Yes	Yes	Yes	0.0° to 999.9°C	0000 to 9999	40.0°C
Integral (reset) time (see note 1)	0	7	Yes	Yes	Yes	Yes	0 to 9999 s		240 s
Derivative (rate) time (see note 1)	0	8	Yes	Yes	Yes	Yes	0 to 9999 s		40 s
SP lower limit	1	0	Yes	Yes	Yes	No	Sensor measuring range lower limit to (SP upper limit value – 1 digit)		TC: –200°C Pt: –99.9°C
SP upper limit	1	1	Yes	Yes	Yes	No	(SP lower limit + 1 digit) to sensor measuring range upper limit		TC: 1,300°C Pt: 450.0°C
Control period (see note 1 and 3)	1	7	Yes	Yes	Yes	No	1 to 99 s		20 s
Hysteresis (see note 2)	1	8	Yes	Yes	Yes	Yes	0.0° to 999.9°C	0000 to 9999	0.8°C
Alarm hysteresis (see note 4)	1	9	Yes	Yes	Yes	No	0.0° to 999.9°C	0000 to 9999	0.2°C
Heater current monitor (see note 3)	1	A	No	Yes	Yes	No	0.0 to 5.6 A	0000 to 0056	---
Heater burnout current (see note 3)	1	B	Yes	Yes	Yes	No	0.0 to 5.0 A	0000 to 0050	0.0 A
							0.0: No heater burnout detection, alarm signal OFF 5.0: No heater burnout detection, alarm signal ON		
Control output variable monitor	2	0	No	Yes	Yes	No	0.0% to 100.0%	0000 to 1000	---
Auto-tuning start/stop (see note 1)	2	1	Yes	No	Yes	No	AT start = 0001 AT stop = 0000		---
Copy bank	2	2	Yes	No	Yes	No	Run = 0001		---
Sensor-type monitor	2	3	No	Yes	Yes	No	0 to 9		Setting for SW202
Alarm 1 mode	2	4	Yes	Yes	Yes	No	0 to 9		2
Alarm 2 mode	2	5	Yes	Yes	Yes	No	Mode for Alarm SV 1/2 (0: no alarm)		2

Yes: Possible.
No: Not possible or not required.

Note 1. Only when advanced PID control is selected.
2. Only when ON/OFF control is selected.

3. Does not apply to current output. A value of 5.6 (0056) for the heater current monitor indicates that the heater current value exceeds 5.6 A.
4. Does not apply when Alarm Mode = 0
5. Refer to *3-4 Parameter Displays and Settings* for details of the parameters.
6. Thermocouple = TC
   Platinum Resistance Thermometer = Pt

RAM Write Command

Parameter	Command		Write	Read	Loop no.	Bank no.	Actual data range	Write/Read data range	Default value
Set point	4	0	Yes	No	Yes	Yes	SV lower limit to SV upper limit		0°C
Executed bank number	4	2	Yes	No	Yes	No	1 to 8		1
Alarm SV 1 (see note 4)	4	3	Yes	No	Yes	Yes	Alarm mode TC 1, 4, 5: 0° to 9999°C Other TCs: –999° to 9999°C	0000 to 9999 F999 to 9999	0°C
Alarm SV 2 (see note 4)	4	4	Yes	No	Yes	Yes	Pt 1, 4, 5: 0.0° to 999.9°C Other Pts: –99.9° to 999.9°C	0000 to 9999 F999 to 9999	0°C
Input shift value	4	5	Yes	No	Yes	Yes	–99.9° to 999.9°C	F999 to 9999	0.0°C
Proportional band (see note 1)	4	6	Yes	No	Yes	Yes	0.0° to 999.9°C	0000 to 9999	40.0°C
Integral (reset) time (see note 1)	4	7	Yes	No	Yes	Yes	0 to 9999 s		240 s
Derivative (rate) time (see note 1)	4	8	Yes	No	Yes	Yes	0 to 9999 s		40 s
SP lower limit	5	0	Yes	No	Yes	No	Sensor measuring range lower limit to (SP upper limit value – 1 digit)		TC: –200°C Pt: –99.9°C
SP upper limit	5	1	Yes	No	Yes	No	(SP lower limit + 1 digit) to sensor measuring range upper limit		TC: 1,300°C Pt: 450.0°C
Control period (see note 1 and 3)	5	7	Yes	No	Yes	No	1 to 99 s		20 s
Hysteresis (see note 2)	5	8	Yes	No	Yes	Yes	0.0° to 999.9°C	0000 to 9999	0.8°C
Alarm hysteresis (see note 4)	5	9	Yes	No	Yes	No	0.0° to 999.9°C	0000 to 9999	0.2°C
Heater burnout current (see note 3)	5	B	Yes	No	Yes	No	0.0 to 5.0 A	0000 to 0050	0.0 A
							0.0: No heater burnout detection, alarm signal OFF 5.0: No heater burnout detection, alarm signal ON		
Alarm 1 mode	6	4	Yes	No	Yes	No	0 to 9		2
Alarm 2 mode	6	5	Yes	No	Yes	No	Mode for Alarm SV 1/2 (0: no alarm)		2

Yes: Possible.
No: Not possible or not required.

Note

1. Only when advanced PID control is selected.
2. Only when ON/OFF control is selected.
3. Does not apply to current output.
4. Does not apply when Alarm Mode = 0
5. Data written by the RAM write command will disappear when the power is turned OFF.
6. Data cannot be read using the RAM write command.
7. Refer to *3-4 Parameter Displays and Settings* for details of the parameters.

4-2 Data Flow

Refer to *3-2 Data Flow* for the data flow in the Temperature Control Unit.

Data Settings

Before setting data with a user program or the Programming Console, turn ON SW2-2 of the Unit to enable data setting from the CPU Unit. However, the executed bank number can be set with a user program or from the Programming Console regardless of the ON/OFF setting of SW2-2.

SW2-1 (switching memory contents) may be set in either the OFF (Fixed) or ON (Normal) position, but care is required as the setting of this switch changes the stored data contents.

4-3 Programming

4-3-1 C200HX/HG/HE, C200HS, C200H

Example with SW2-1 with Fixed Memory Allocations

Description and Conditions

Example:	The user program makes the following settings: Loop 1 SP = 80°C Loop 2 SP = 200°C Loop 1 executed bank number = 1 Loop 2 executed bank number = 3
Conditions:	C200H-TC001 (thermocouple) SW203 set to 2 (K). Unit number set to 0 (allocated memory: IR100 to IR109). SW2-1 set OFF (Fixed) and SW2-2 set ON (C200H PC).

Sample Program

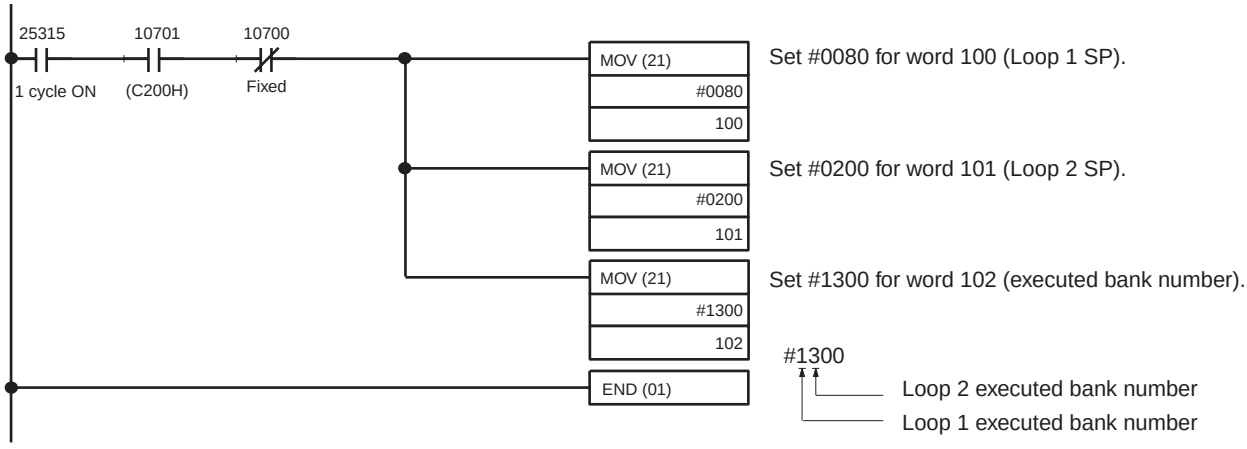

Be sure to set the correct values for the Loop 1 and Loop 2 SP.

The SV value is #0000 (0°C) if no data is set. If the executed bank number is set to a value out of the range from 1 to 8 the bank number reverts to the previous value (default value = 1).

Reading Monitored Data Read monitored data into the program using Wd (n+3) to (n+9).

Example 1: Write with SW2-1 Set for Normal Memory Allocations

Description and Conditions

Example	The user program makes the following settings: Loop 1 SP = 200°C (Bank no. = 1) Loop 2 SP = 250°C (Bank no. = 2) Loop 1 executed bank number = 1 Loop 2 executed bank number = 2 Loop 1 heater burnout current value = 2.0 A Loop 2 heater burnout current value = 2.5 A
Conditions	C200H-TC001 (thermocouple) SW202 set to 2 (K). Unit number set to 0 (allocated memory: IR100 to IR109). SW2-1 set ON (Normal) and SW2-2 set ON (C200H PC).

Sample Program

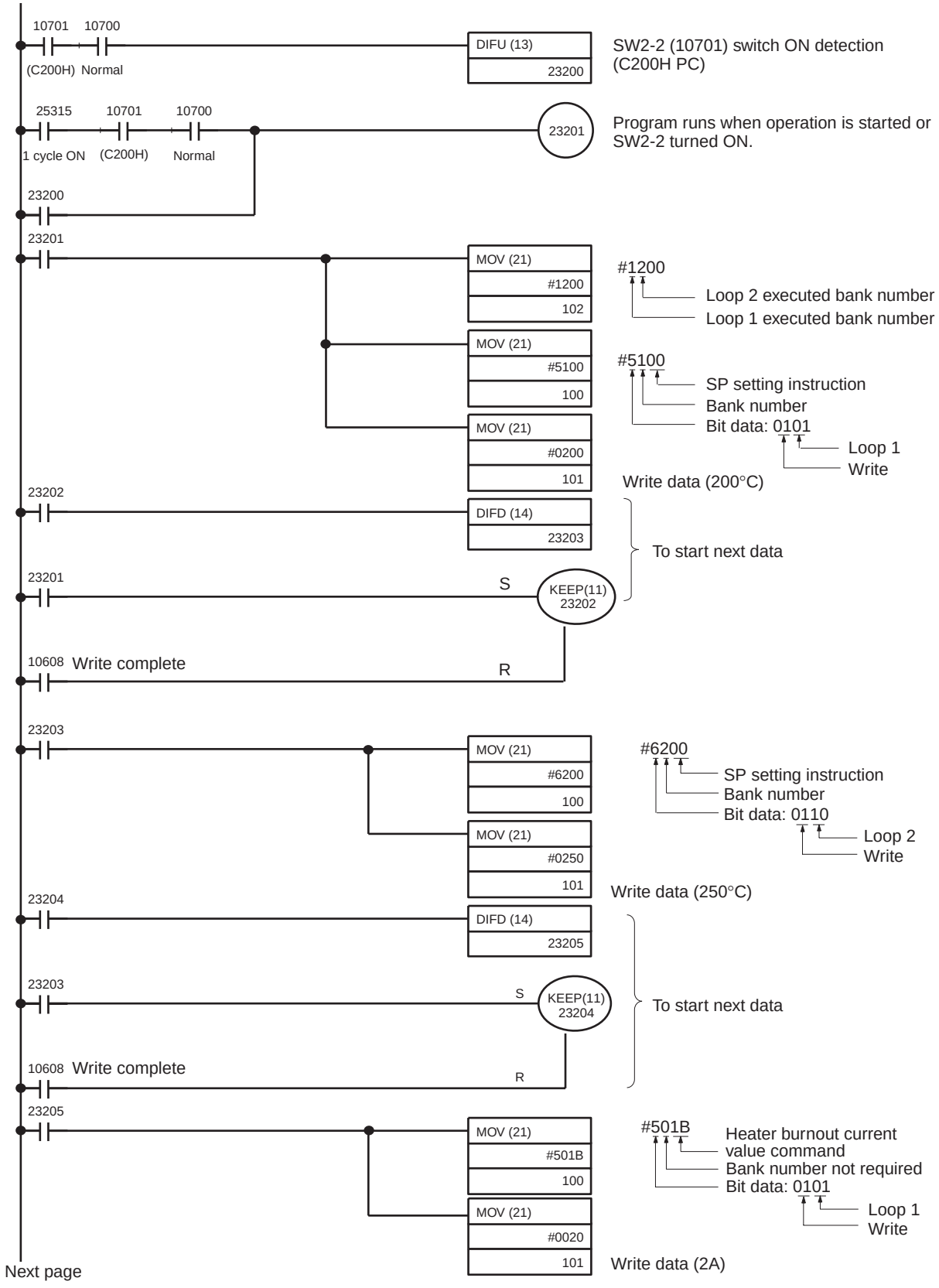

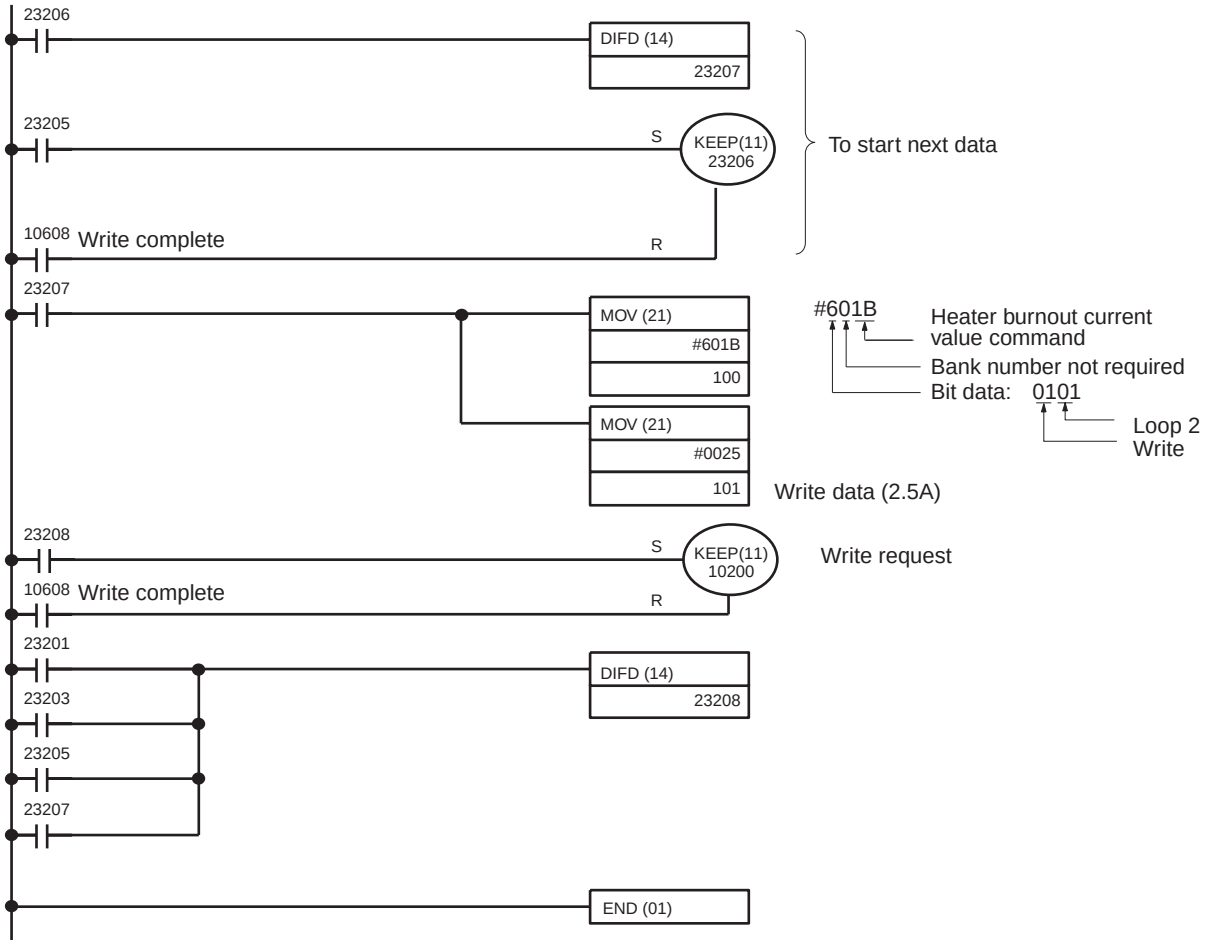
23206
DIFD (14)
23207
23205
S
KEEP(11)
23206
To start next data
10608
Write complete
R
23207
MOV (21)
#601B
100
#601B
Heater burnout current value command
Bank number not required
Bit data: 0101
Loop 2 Write
MOV (21)
#0025
101
Write data (2.5A)
23208
S
KEEP(11)
10200
Write request
10608
Write complete
R
23201
DIFD (14)
23208
23203
23205
23207
END (01)

Timing Chart

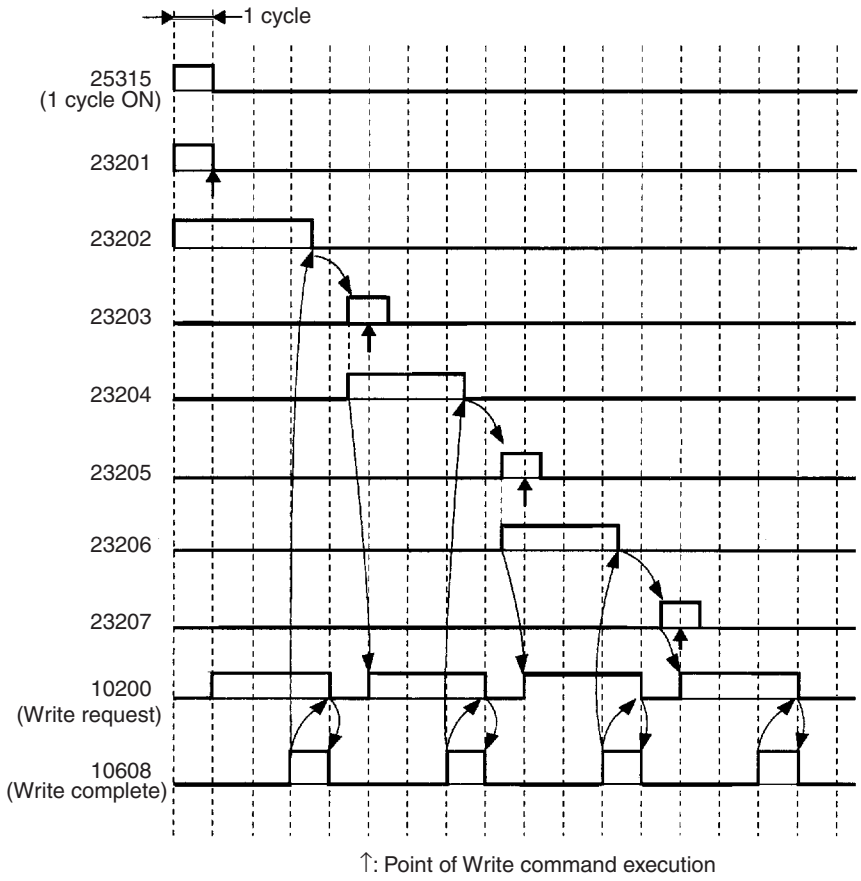

In addition to the above, IR 23201 will turn ON for one cycle on the rising edge of SW2-2 (IR 10701). One cycle after IR 23208 turns ON, IR 10200 (write request) will turn ON.

Example 2: Read with SW2-1 Set for Normal Memory Allocations

Description and Conditions

Example:	The following data is read from the indicated addresses: Loop 1 PV: DM0000 Loop 1 control output variable: DM0001 Loop 2 heater current: DM0002 This read program is to be executed after writing the data with program example 1.
Conditions:	C200H-TC001 (thermocouple) SW202 set to 2 (K). Unit number set to 0 (allocated memory: IR100 to IR109. SW2-1 set ON (Normal) and SW2-2 set ON (C200H PC).

Sample Program

Insert the program below before the END instruction in the program on page 47.

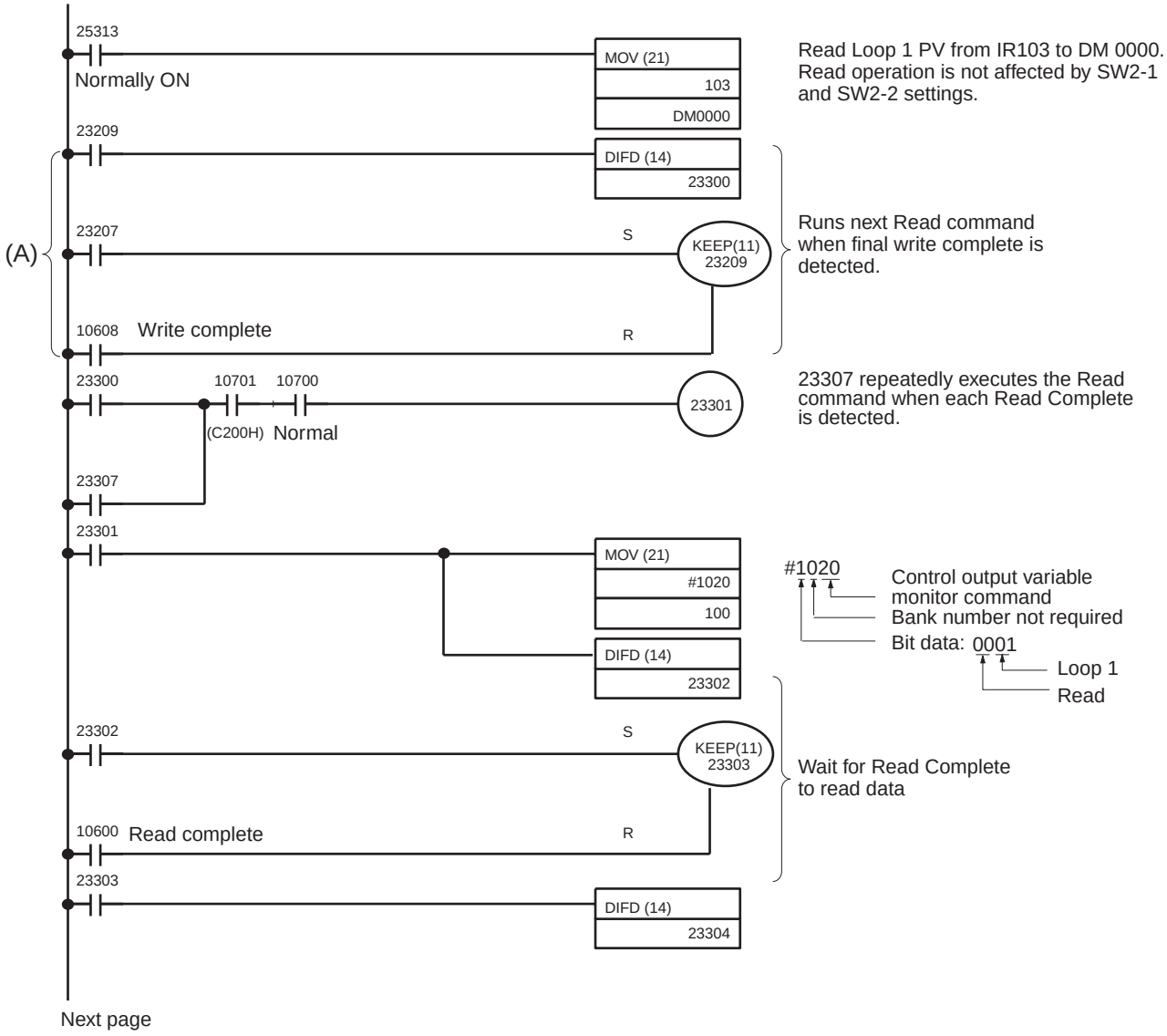

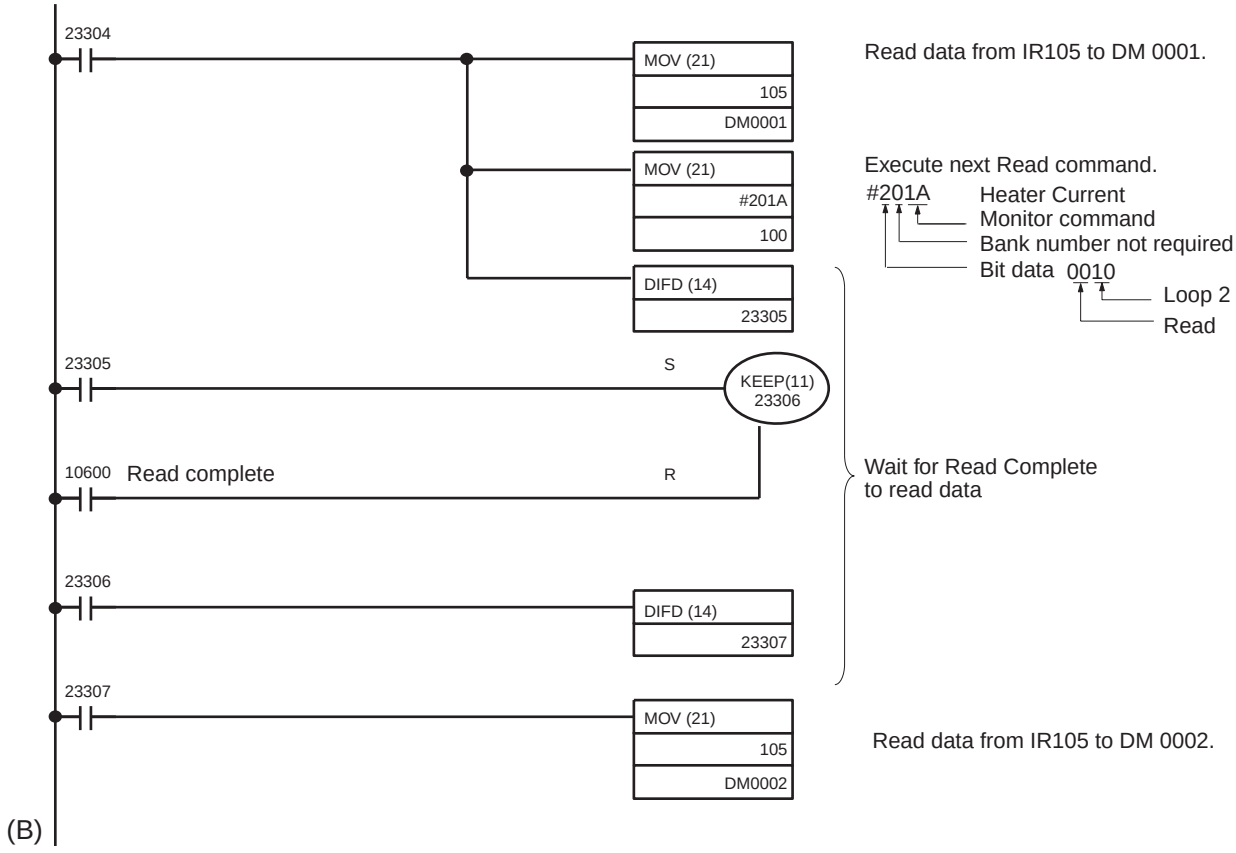

Change the above program as shown below if only reading is to be carried out.

Replace part (A) of the program with the following program.

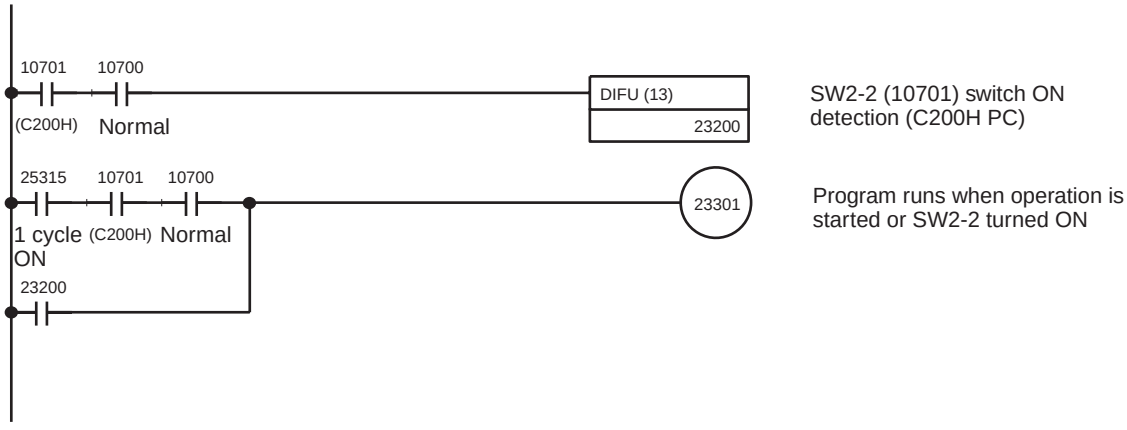

Add an END instruction (01) at position (B) of the program.

Timing Chart

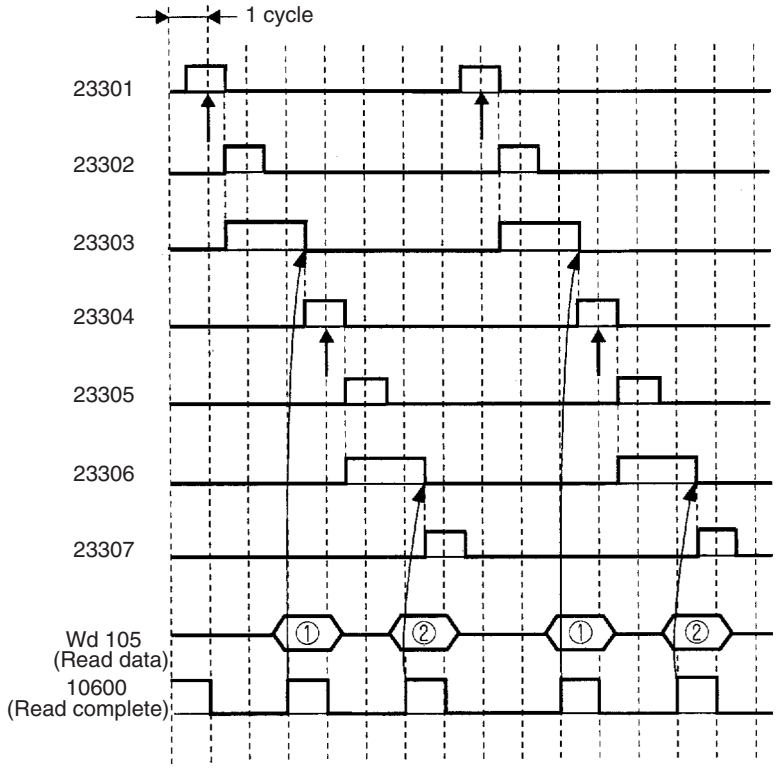

↑ : Point of Read command execution
① : Point where data (1) is read.
② : Point where data (2) is read.

4-3-2 CS Series

Example with Fixed Memory Allocations

Description and Conditions

Example:	The user program makes the following settings: Loop 1 SP = 80°C Loop 2 SP = 200°C Loop 1 executed bank number = 1 Loop 2 executed bank number = 3
Conditions:	C200H-TC001 (thermocouple) SW203 set to 2 (K). Unit number set to 0 (allocated memory: CIO 2000 to CIO 2009). SW2-1 set OFF (Fixed) and SW2-2 set ON (CPU Unit).

Sample Program

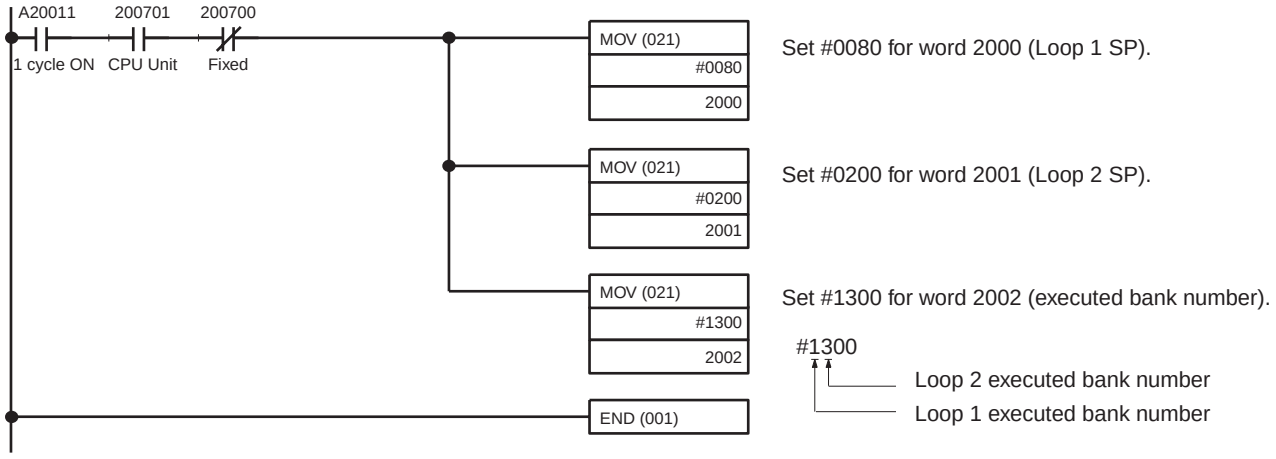

- Be sure to set the correct values for the Loop 1 and Loop 2 SP. The value is #0000 (0°C) if no data is set.
- If the executed bank number is set to a value out of the range from 1 to 8, the bank number reverts to the previous value (default value = 1).

Reading Monitored Data Read monitored data into the program using Wd (n+3) to (n+9).

Example 1: Write Set for Normal Memory Allocations

Description and Conditions

Example	The user program makes the following settings. This example writes to EEPROM. To write to RAM, add 4 to the leftmost digit of the command. Loop 1 SP = 200°C (Bank no. = 1) Loop 2 SP = 250°C (Bank no. = 2) Loop 1 executed bank number = 1 Loop 2 executed bank number = 2 Loop 1 heater burnout current value = 2.0 A Loop 2 heater burnout current value = 2.5 A
Conditions	C200H-TC001 (thermocouple) SW202 set to 2 (K). Unit number set to 0 (allocated memory: CIO 2000 to CIO 2009). SW2-1 set ON (Normal) and SW2-2 set ON (CPU Unit).

Sample Program

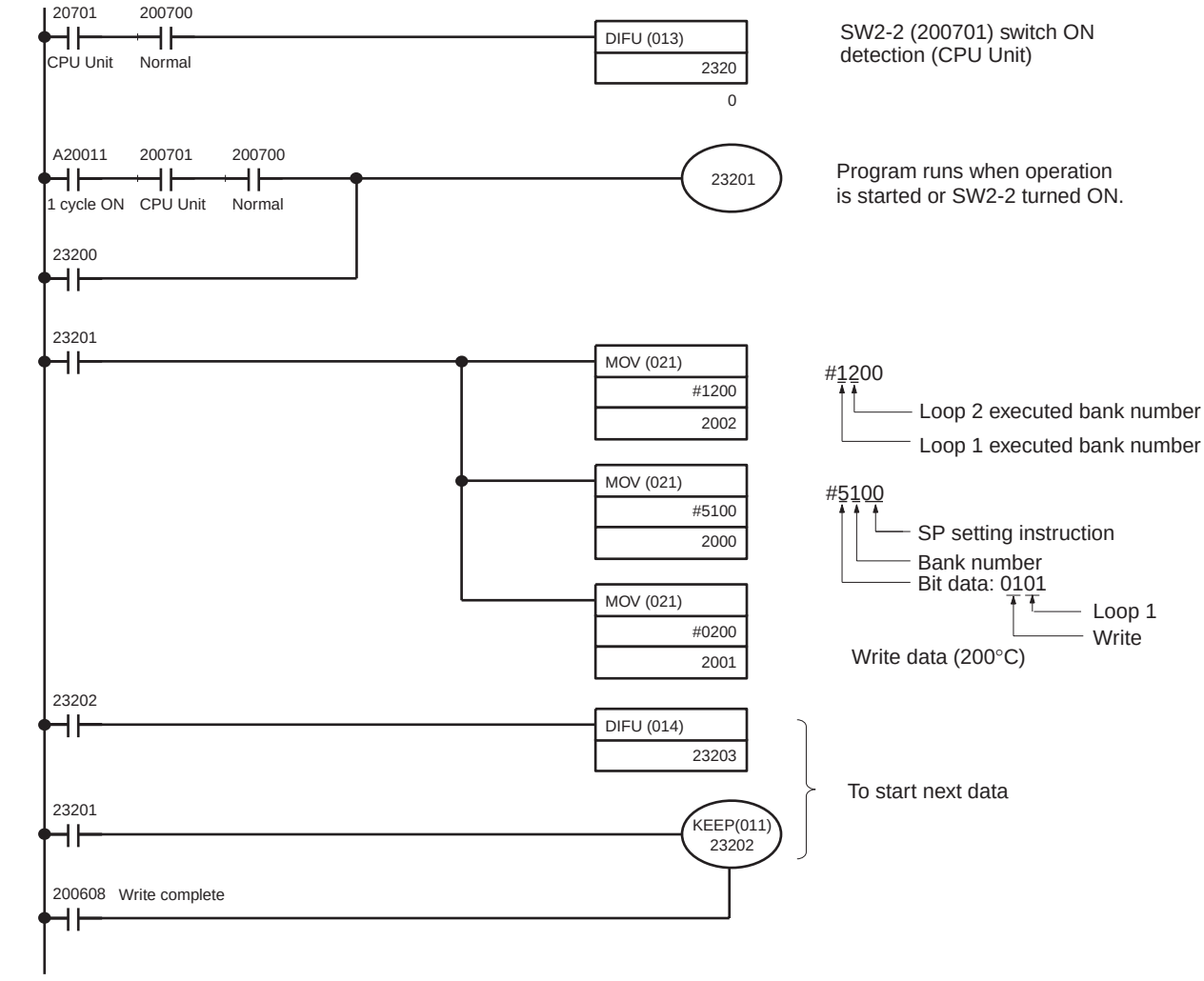

Next page

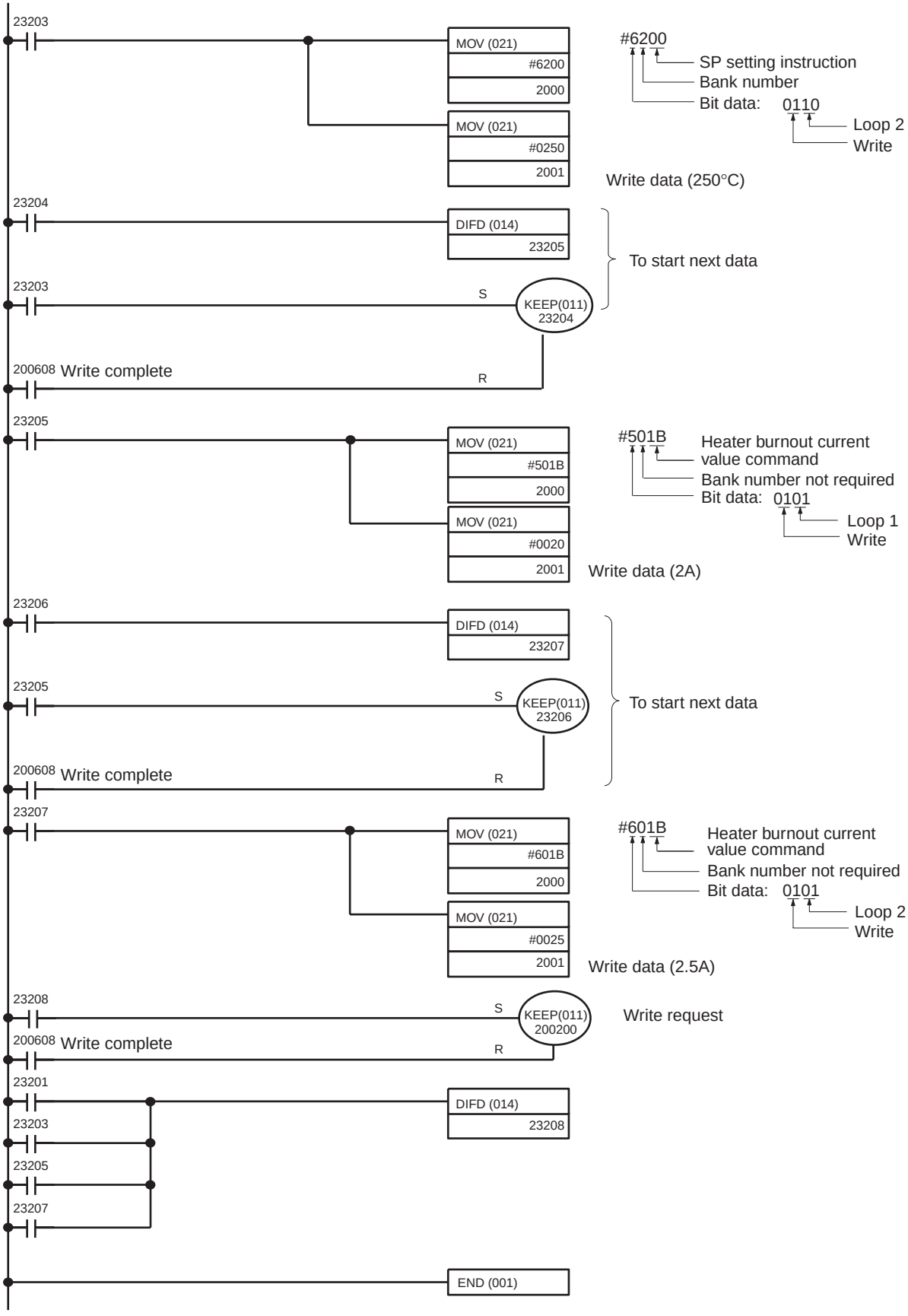
23203
MOV (021)
#6200
2000
MOV (021)
#0250
2001
#6200
SP setting instruction
Bank number
Bit data: 0110
Loop 2
Write
Write data (250°C)
23204
DIFD (014)
23205
To start next data
23203
S
KEEP(011)
23204
200608 Write complete
R
23205
MOV (021)
#501B
2000
MOV (021)
#0020
2001
#501B
Heater burnout current value command
Bank number not required
Bit data: 0101
Loop 1
Write
Write data (2A)
23206
DIFD (014)
23207
23205
S
KEEP(011)
23206
To start next data
200608 Write complete
R
23207
MOV (021)
#601B
2000
MOV (021)
#0025
2001
#601B
Heater burnout current value command
Bank number not required
Bit data: 0101
Loop 2
Write
Write data (2.5A)
23208
S
KEEP(011)
200200
Write request
200608 Write complete
R
23201
23203
23205
23207
DIFD (014)
23208
END (001)

Timing Chart

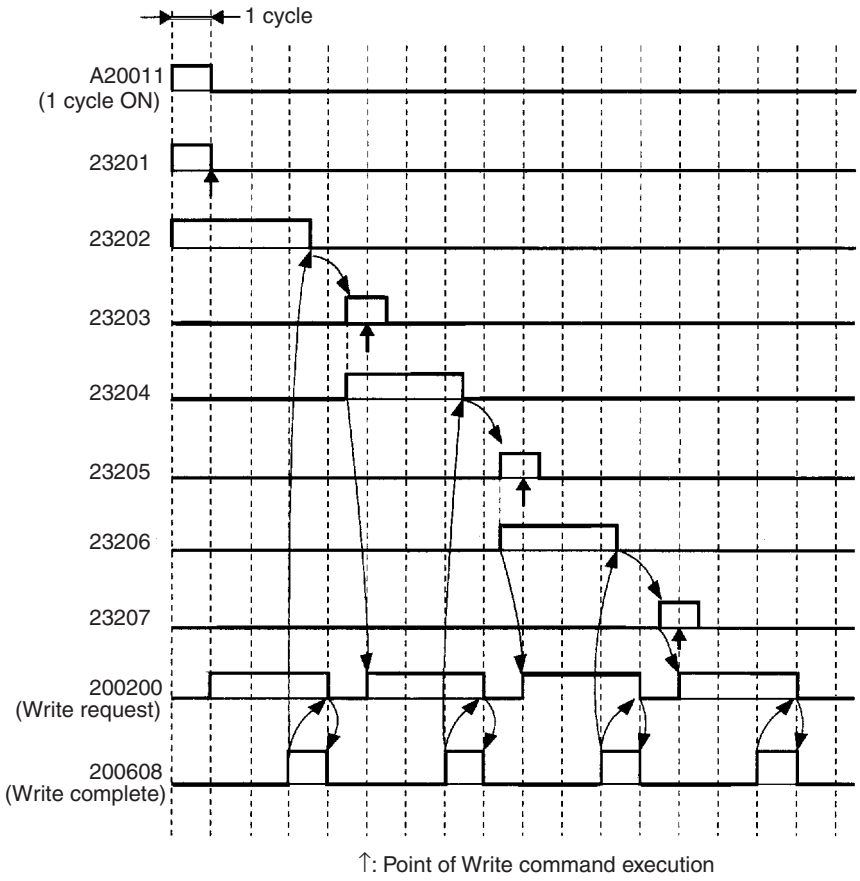

In addition to the above, CIO 23201 will turn ON for one cycle on the rising edge of SW2-2 (CIO 200701). One cycle after CIO 23208 turns ON, CIO 200200 (write request) will turn ON.

Example 2: Read Set for Normal Memory Allocations

Description and Conditions

Example:	The following data is read from the indicated addresses: Loop 1 PV: D0000 Loop 1 control output variable: D0001 Loop 2 heater current: D0002 This read program is to be executed after writing the data with program example 1.
Conditions:	C200H-TC001 (thermocouple) SW202 set to 2 (K). Unit number set to 0 (allocated memory: CIO 2000 to CIO 2009. SW2-1 set ON (Normal) and SW2-2 set ON (CPU Unit).

Sample Program

Insert the program below before the END instruction in the program on page 54.

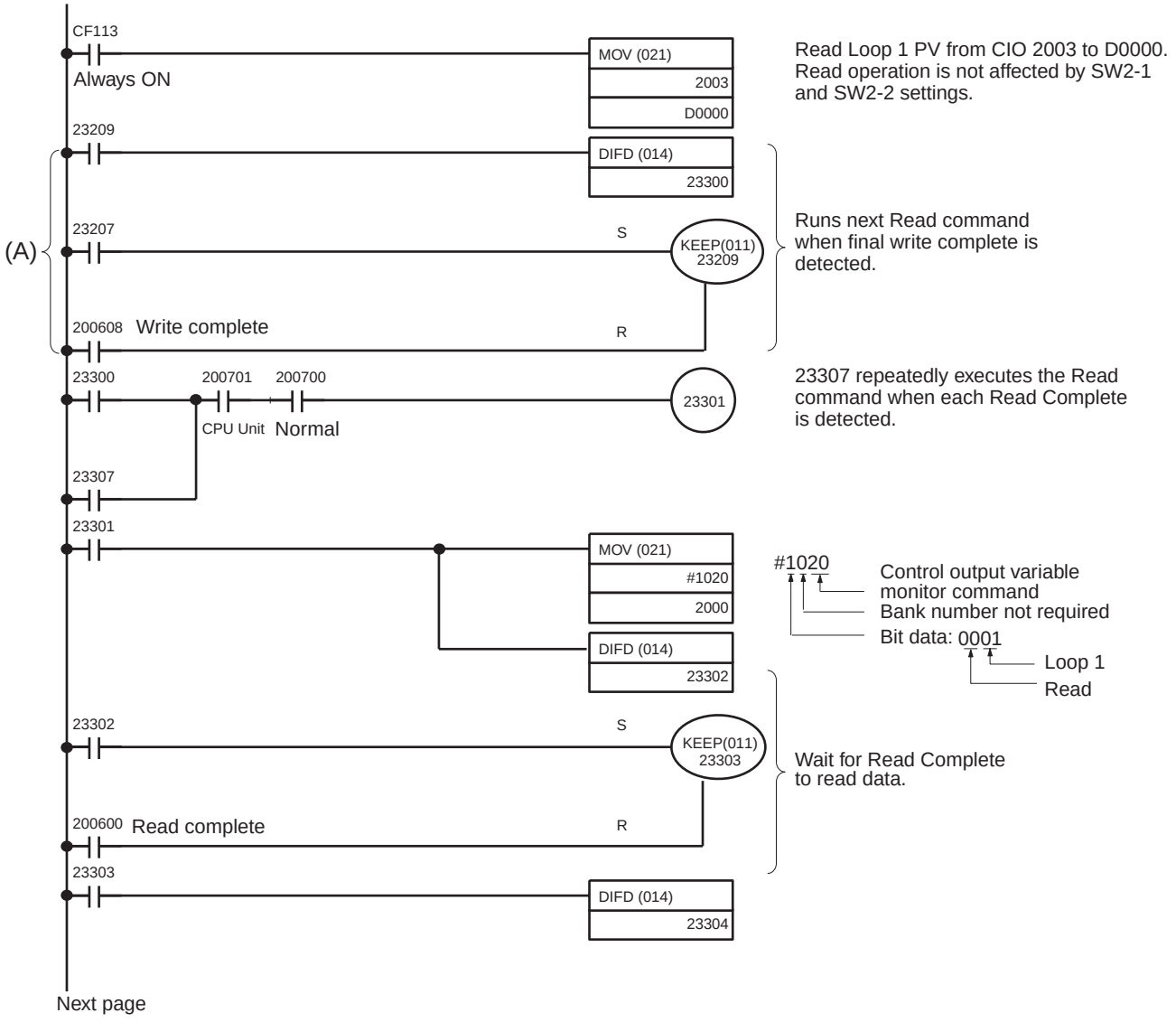

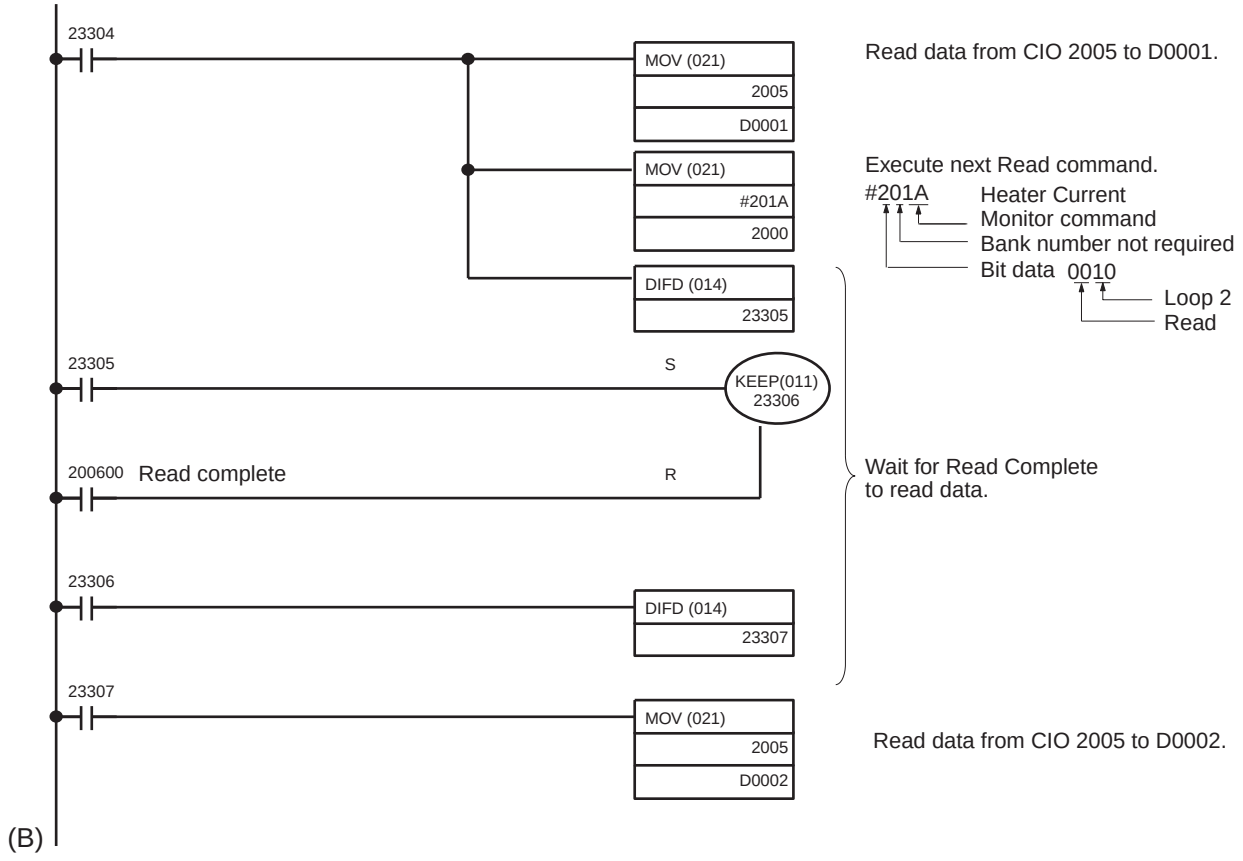

Change the above program as shown below if only reading is to be carried out.

Replace part (A) of the program with the following program.

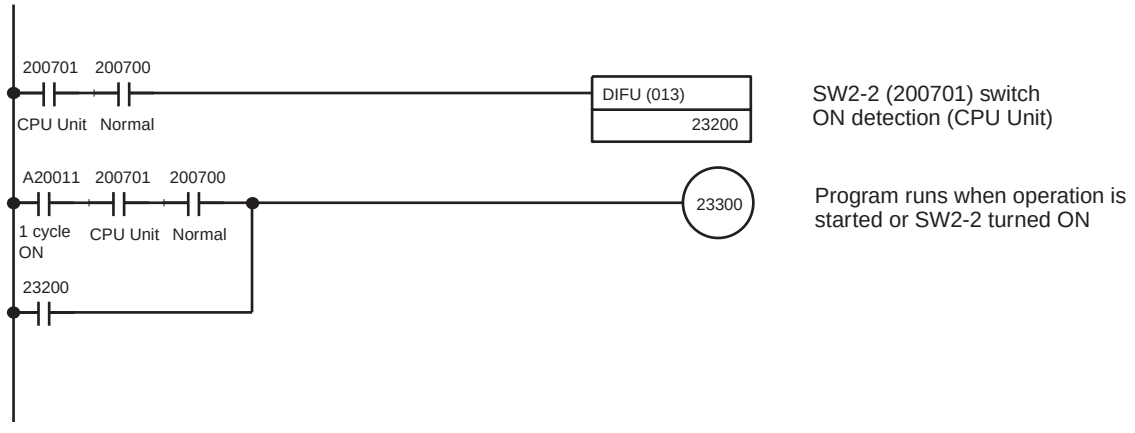

Add an END instruction (001) at position (B) of the program.

Timing Chart

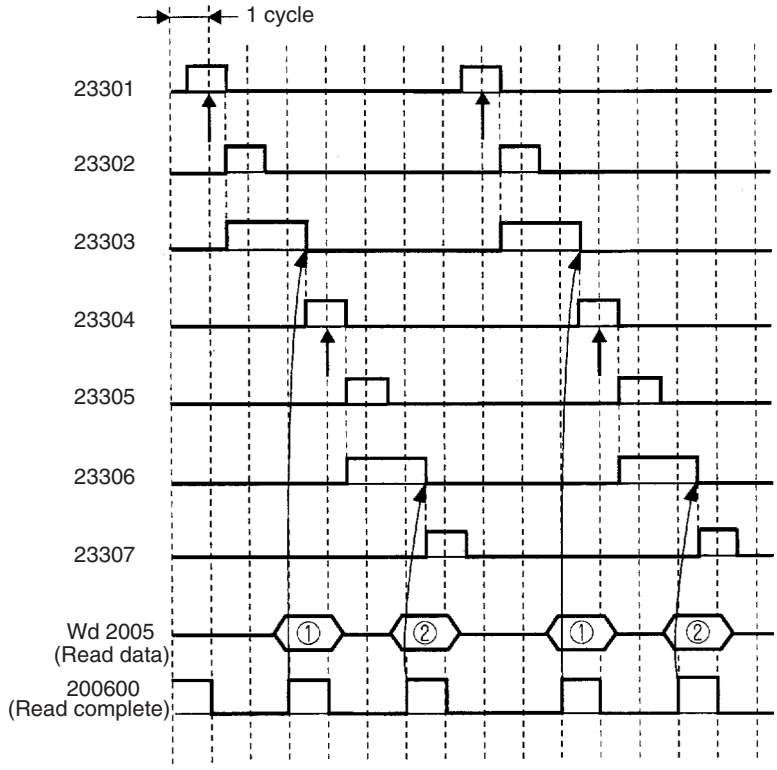

↑ : Point of Read command execution
① : Point where data (1) is read.
② : Point where data (2) is read.

4-3-3 Operation Timing

The following descriptions apply to the C200HX/HG/HE, C200HS, C200H, and CS-series PCs.

Write Operation Timing

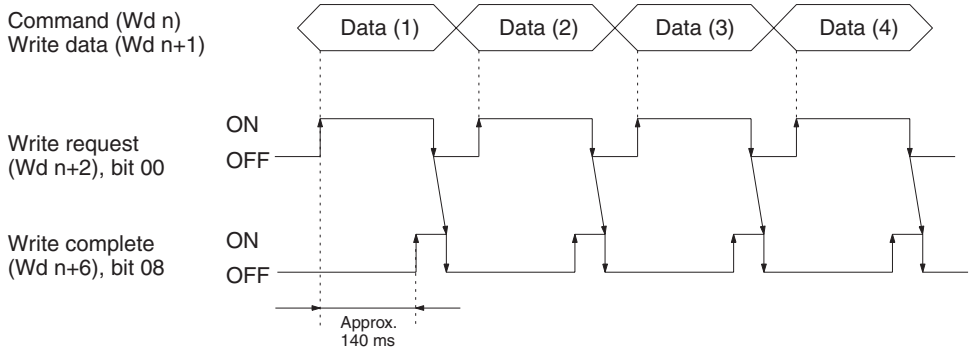

1,2,3...

1. The data is written to the Temperature Control Unit EEPROM when the Write Request Flag turns ON.
2. The Write Complete Flag turns ON when the data writing operation is completed. It takes approximately 140 ms to write the data.
3. The Write Complete Flag automatically turns OFF when the Write Request Flag turns OFF.

   Check the Write Complete Flag is ON before turning OFF the Write Request Flag. If the Write Request Flag is set to OFF before the Write Com-

plete Flag turns ON the Write Complete Flag will not subsequently turn ON.

Temporarily turn the Write Request Flag OFF before executing the second and subsequent write operations. Writing is enabled on the ON rising edge of the Write Request Flag.

The Loop 1 and 2 executed bank number (Wd n+2) sets data directly. The data is written to the Temperature Control Unit RAM. If the value is set out of this range, the bank number reverts to the previous value (default value = 1).

Timing for a Read Operation

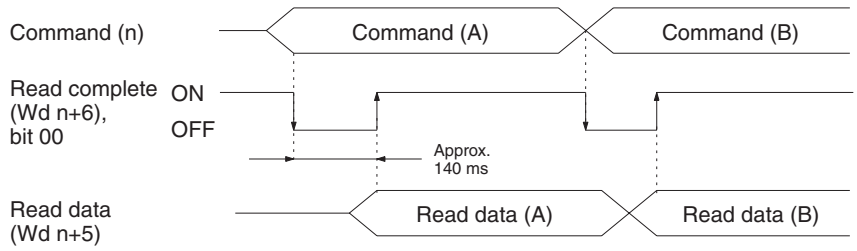

1,2,3...

1. The read data is output to Wd (n+5) approximately 140 ms after the Read command is executed.
2. The read data is updated every 100 ms.
3. When the Read command is modified, turn OFF the Read Complete Flag to execute the next read operation.

4-3-4 I/O Refresh

The following descriptions apply to the C200HX/HG/HE, C200HS, C200H, and CS-series PCs.

Temperature control cannot be performed properly unless the I/O refresh interval is at least 8 ms. Therefore, create programs that satisfy all of the following conditions.

- Set the cycle time to 8 ms min.

  If the program processing time is short for the C200HX/HG/HE, C200HS, and C200H, use the CYCLE TIME instruction SCAN(18) to set a minimum cycle time.

  If the program processing time is short for the CS-series PC, set the cycle time to a minimum value in the PC Setup.
- When using the I/O Refresh instruction IORF with the Unit, provide an interval of at least 8 ms between the end refreshes.
- Provide an interval of at least 8 ms between the I/O Refresh instructions.

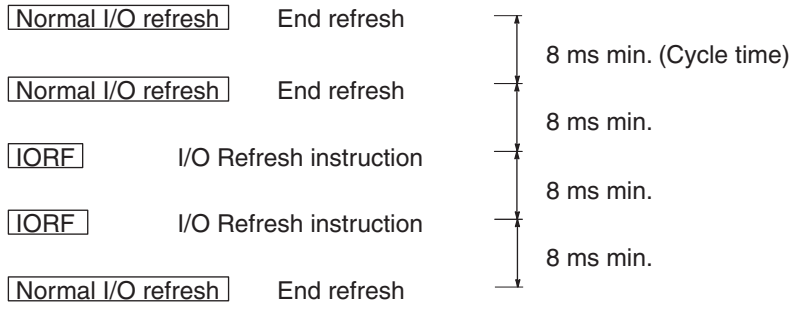

SECTION 5
Troubleshooting

This section provides possible errors and error remedies.

5-1 Error Detection 62

5-1 Error Detection

When an error occurs in an input or in the Unit, details of the error are reported to the Data Setting Console and input relays.

Sensor Input Errors

Display	Error name	Output status after error	Cause	Remedy
SEr 1	Loop 1 sensor error	Control output: The transistor output or voltage output turns OFF or the current output falls below 2 mA. Alarm output: The alarm is output assuming the input is ±10%FS.	Reading is ±10%FS out of sensor measurement range (i.e., 10%FS below the lower limit or 10%FS above the upper limit). Broken or incorrect sensor wiring Defective sensor Defective Unit SW203-4 is OFF (Loop 2 enabled) but no sensor connected to Loop 2	Check the sensor wiring. Replace the sensor. Replace the Unit. Correctly set switch SW203-4.
SEr2	Loop 2 sensor error			
SErr	Cold junction compensating circuit error	Control output: The transistor output or voltage output turns OFF or the current output falls below 2 mA. Alarm output turns OFF.	Abnormality in cold junction compensating circuit. Applies to thermocouple type only.	Replace the Unit.

Data Setting Console

When a sensor error occurs, one of the codes above and the detected temperature are displayed alternately.

If a Loop 1 sensor error SEr 1 and a Loop 2 sensor error SEr2 occur simultaneously, SEr 1 is displayed preferentially. Even if a sensor error is detected in one Loop, the other Loop continues to operate normally. Control operation restarts automatically five seconds after the cause of the error is corrected.

The bits shown in the table below are set to 1 when a relay input error occurs.

Wd (n+8), bit 14	Loop 1 sensor error	Both bits = 1 after a cold junction compensating circuit error.
Wd (n+9), bit 14	Loop 2 sensor error	

CT Input Overflow

Display	Error name	Cause	Remedy
FFFF	CT input overflow	The detected heater current exceeds 5.5 A.	Check the CT and heater wiring.

The display shown in the table above will appear if the CT overflow error occurs when the heater current monitor is selected. The display returns to normal after the cause of the error is removed.

The bits shown in the table below are set to 1 when the CT overflow error occurs.

Wd (n+8), bit 13	Loop 1 CT overflow
Wd (n+9), bit 13	Loop 2 CT overflow

Heater Burnout Alarm

Display	Error name	Cause	Remedy
HB indicator lit	Heater burnout	The detected heater current is below the heater burnout current value.	Check the heater and heater wiring. Replace heater if necessary.

Error displayed when an abnormality occurs in the loop currently being displayed.

The bits shown in the table below are set to 1 when a heater burnout alarm occurs.

Wd (n+8), bit 02	Loop 1 heater burnout alarm
Wd (n+9), bit 02	Loop 2 heater burnout alarm

Use one of the methods below to reset a heater burnout alarm.

- Turn ON the Special I/O Unit Restart Bit (AR 0100 to AR 0109 for the C200HX/HG/HE, C200HS, C200H and A50200 to A50209 for a CS-series PC) and then turn it OFF.
- Turn the PC power supply OFF then back ON.
- Set the heater burnout current limit to 00 then back to its original value.

Temperature Alarm

Display	Error name	Cause	Remedy
ALM1 indicator lit	Temperature alarm 1	The temperature is in the alarm range set with Alarm SV 1.	Check the temperature of the measured body. Check the set SP value.

Error displayed when an abnormality occurs in the loop currently being displayed. No indicator is provided to show an ALM2 alarm.

The bits shown in the table below are set to 1 when a temperature alarm occurs.

Wd (n+8)	Bit 01	Temperature alarm 1	Loop 1
	Bit 00	Temperature alarm 2	
Wd (n+9)	Bit 01	Temperature alarm 1	Loop 2
	Bit 00	Temperature alarm 2	

EEPROM Error

Display	Error name	Output status after error	Cause	Remedy
E111	EEPROM error	Control output: The transistor output or voltage output is OFF or the current output is less than 2 mA. Alarm output is OFF.	Defective EEPROM	Replace the Unit

The RUN indicator turns off when an EEPROM error occurs.

Duplicate I/O Unit

The unit number duplicates the number of another Special I/O Unit. SR 25415 (for C200HX/HG/HE, C200HS, C200H) or A40113 (for CS-series PC) will turn ON when an Duplicate I/O Unit error occurs. Refer to AR0000 to AR0009 for the C200HX/HG/HE, C200HS, C200H or to A41100 to A41109 for the CS-series PC for the duplicated unit number. The CPU Unit will not operate during a duplicate I/O error.

Set the Unit number to a separate number.

Special I/O Unit Error

I/O refresh not operating correctly between the CPU Unit and Temperature Control Unit. Operation is not interrupted when a Special I/O Unit error occurs. Refer to AR 0000 to AR 0009 for the C200HX/HG/HE, C200HS, C200H or to A41100 to A41109 for a CS-series PC for the unit number where the error occurred. After correcting the cause of the error, turn ON the Special I/O Unit Restart Bit (AR 0100 to AR0109 for the C200HX/HG/HE, C200HS, C200H; A50200 to A50209 for a CS-series PC) to restart operation.

RUN Indicator Unlit

The PC power supply is turned on but the RUN indicator is not lit. None of the errors described previously are detected. Replace the Unit.

No Data Setting Console Display

No 24 VDC power supply is connected to the Temperature Control Unit input terminals A8 and A9.

- The connecting cable is disconnected.
- The connecting cable is broken.
- A circuit in the Data Setting Console is defective.
- A circuit in the Temperature Control Unit is defective.

After determining the cause of the error, correct the problem or replace the Unit.

Temperature Control Not Performed

Temperature control will not be performed in either one of the following cases.

- SW203-5 on the rear panel is set to ON and the CPU Unit is in PROGRAM mode.
- The Stop Bit (word n+2, bit 06 for loop 1 and bit 04 for loop 2) is ON.

Change to proper settings.

Appendix A
Specifications

General Specifications

Conforms to the CPU Unit specifications.

Item	C200H-TC00□	C200H-TC10□
Connectable temperature sensor (see note 1)	Thermocouple (R, S, K, J, T, E, B, N, L, U)	Platinum resistance thermometer (JPt100, Pt100)
Current Transformer detection current	0.1 to 4.9 A (with a heater burnout detecting current difference of 0.5 A min.) Indication accuracy: ±5% FS ±1 digit max.	
No. of input points (loops)	Two points (two loops, each of which consists of a temperature sensor and a CT)	
Temperature control mode	PID, ON/OFF (selectable with a switch on the rear panel) (PID control with feed-forward circuitry with auto-tuning)	
Setting/Indication accuracy (see note 2, 3 and 4)	±0.5% of set (designated) value or ±2°C whichever larger ±1 digit max.	±0.5% of set (designated) value or ±1°C whichever larger ±1 digit max.
Influence of temperature: For ambient temperature change from 0 to 23 to 55°C	Thermocouples R and S ±1% of set (designated) value or ±10°C, whichever is larger, ±1 digit max. Other Thermocouples ±1% of set (designated) value or ±4°C, whichever is larger, ± 1 digit max. CT Input ±0.25 A ±1 digit max.	Platinum Resistance Thermometer ±1% of set (designated) value or ±2°C, whichever is larger, ±1 digit max. CT Input ±0.25 A ±1 digit max.
Influence of voltage: For change from –15% lower to 10% higher than rated voltage		
Hysteresis	0.0° to 999.9°C/°F (in units of 0.1°C/°F) (during ON/OFF control action)	
Proportional band	0.0° to 999.9°C/°F (in units of 0.1°C/°F)	
Integral (reset) time	0 to 9999 s (in units of 1 s)	
Derivative (rate) time	0 to 9999 s (in units of 1 s)	
Control period	1 to 99 s (in units of 1 s)	
Sampling period	500 ms	
Output refresh period	500 ms	
Display refresh period	500 ms	
Input shift range	–99.9° to 999.9°C/°F (in units of 0.1°C/°F)	
Alarm output setting range	–999° to 9,999°C/°F (in units of 1°C/°F)	–99.9° to 999.9°C/°F (in units of 0.1°C/°F)
No. of banks	8 banks	
Internal current consumption	5 VDC, 0.33 A max.	
External supply voltage	24 VDC $^{+10\%}/_{-15\%}$, 0.2 A min.	
Dimensions (see note 4)	34.5 mm (W) x 130 mm (H) x 120.5 mm (D)	
Weight	360 g	

Note 1. Set with the switch on the rear panel. See *Appendix B Sensor Temperature Measurement Range* for the measurable temperature range.

2. The set value and designated value coincide with each other.

3. The indication accuracy of thermocouples R and S at a temperature of 200°C max., that of thermocouples K and T at a temperature of –100°C max, and that of thermocouple U are all ±4°C, ±1 digit max. The indication accuracy of thermocouple B at a temperature of 400°C or below is not guaranteed.

4. At an ambient temperature of 23°C.

5. See *Appendix D Dimensions*.

Output Characteristics

Open-collector Output (Pulse) C200H-TC□01

External supply voltage	24 VDC $^{+10\%}/_{-15\%}$
Max. load voltage	24 VDC max.
Max. load current	100 mA max.
Residual voltage when ON	3 V max.
Leakage current when OFF	0.3 mA max.

Voltage Output (Pulse) C200H-TC□02

Output voltage	12 VDC
Max. load current	40 mA (with short-protective circuit)

Current Output (Linear) C200H-TC□03

Output current	4 to 20 mA
Permissible load impedance	600 Ω max.
Current value accuracy	4±0.3 to 20±1 mA

Appendix B

Sensor Temperature Measurement Ranges

C200H-TC00□ Thermocouple

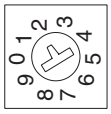

Set the thermocouple type with the switch on the rear panel.

This switch is factory-set to 2 (K).

The Data Setting Console can display the range from 10%FS below the lower limit to 10%FS above the upper limit.

Input		R Platinum vs. platinum rhodium 13%	S Platinum vs. platinum rhodium 10%	K (CA) Chromel vs. alumel	J/L (IC) Iron vs. constantan	T/U (CC) Copper vs. constantan	E (CRC) Chromel vs. constantan	B Platinum rhodium 30% vs. platinum rhodium 6%	N Nichrosil vs. nisil
Range	**°C**	0 to 1,700	0 to 1,700	–200 to 1,300	–100 to 850	–200 to 400	0 to 600	100 to 1,800	0 to 1,300
	°F	0 to 3,000	0 to 3,000	–300 to 2,300	–100 to 1,500	–300 to 700	0 to 1,100	300 to 3,200	0 to 2,300
Switch setting		0	1	2	3/8	4/9	5	6	7

C200H-TC10□ Platinum Resistance Thermometer

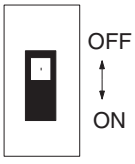

Set the platinum resistance thermometer type with the switch on the rear panel.

This switch is factory-set to OFF (JPt100).

The Data Setting Console can display the range from 10%FS below the lower limit to 10%FS above the upper limit.

Input		JPt100	Pt100
Range	**°C**	–99.9 to 450.0	–99.9 to 450.0
	°F	–99.9 to 800.0	–99.9 to 800.0
Switch setting		OFF	ON

Appendix C

Heater Burnout Detection

Heater Burnout Detection System

The heater wiring is connected through the Current Transformer (CT). As a current flows through the heater wiring, an alternating current is induced in the CT which is dependent on the size of the current flowing. This induced current drops to zero if the heater burns out. The heater burnout alarm signal is output when the induced current is compared to the set current value.

Heater Burnout Alarm Precautions

- Turn ON the heater power supply and the input terminal 24-VDC power supply at the same time as or before the PC power supply. The heater burnout signal is output if the heater power supply or the input terminal 24-VDC power supply is turned ON after the PC power supply.
- Temperature Control Unit operation continues if a burned-out heater causes a heater burnout alarm. Control signal output continues according to the control parameters. Take measures to detect the heater burnout alarm signal to allow early repair.
- The heater burnout alarm is output when the control output is ON. Once the heater burnout alarm is output, it remains ON. Use one of the methods below to reset a heater burnout alarm.
  - Turn ON the Special I/O Unit Restart Bit (AR 0100 to AR 0109 for the C200HX/HG/HE, C200HS, C200H and A50200 to A50209 for the CS1) and then turn it OFF.
  - Turn the PC power supply OFF then back ON.
  - Set the heater burnout current limit to 0.0 then back to its original value.
- Make sure that the current difference between normal operation and heater burnout is at least 0.5 A. Stable detection is difficult with a current difference less than 0.5 A.
- Heater burnout detection is not possible with the current output type (C200H-TC□03) or with 3-phase heaters.
- Set the heater burnout current to 0.0 when heater burnout detection is not required because the CT input wiring is not detected.

Determining the Heater Burnout Detection Current

- Determine the SV from the following equation:

$$SV = \frac{\text{Normal current value} + \text{heater burnout current}}{2}$$

- If more than one heater is connected through the CT, take the heater burnout current as the value when the heater with the smallest current consumption is burned out. If all heaters consume equal current, take the heater burnout current as the value when any one heater is burned out.
- Make sure that the current difference between normal operation and heater burnout is at least 0.5 A. Stable detection is difficult with a current difference less than 0.5 A.
- Set the SV in the range between 0.1 A and 4.9 A. Heater burnout detection is not carried out if the SV is set to 0.0 A or 5.0 A. The alarm signal is always OFF if the SV is set to 0.0 or always ON if the SV is set to 5.0.
- The total heater current during normal operation should not exceed 5 A. If the current exceeds 5.5 A, a CT Input Overflow error occurs and FFFF is displayed if the heater current monitor is selected.

Measure each current with the heater current monitor. In some cases the calculated current may differ from the actual measured value.

Sample SV Calculations

Example 1 Using one 200 VAC, 800 W heater

$$\text{Normal current} = \frac{800}{200} = 4\ \text{A}$$

Burnout current = 0 A

$$\text{SV} = \frac{4 + 0}{2} = 2\ \text{A}\ (\leq 4.9\ \text{A})$$

Example 2 Using three 100 VAC, 100 W heaters

$$\text{Normal current} = \frac{100}{100} \times 3 = 3\ \text{A}$$

$$\text{Burnout current with one heater burned out} = \frac{100}{100} \times 2 = 2\ \text{A}$$

$$\text{SV} = \frac{3 + 2}{2} = 2.5\ \text{A}\ (\leq 4.9\ \text{A})$$

Difference between normal and burnout current = 3 – 2 = 1 A (≤ 0.5 A)

Specifications

Heater Burnout Detection Characteristics

Heater burnout detection setting range	0.1 to 4.9 A (in units of 0.1 A) (see note 1)
Current difference required for heater burnout detection	0.5 A min. (normal time – burnout time)
Heater current monitor range	0.0 to 5.5 A
Monitor accuracy of input current	±5% of FS ±1 digit max.
Min. detectable ON time	200 ms (see note 2)

Note 1. If the heater burnout detection setting value is set to 0.0 or 5.0 A, no heater burnout detection is possible. The alarm signal is turned OFF if the heater burnout detection setting value is set to 0.0 A and turned ON if it is set to 5.0 A.

2. If the control output is turned ON for less than 200 ms, no heater burnout detection or heater current measurement is possible.

E54-CT1/CT3 Current Transformer

Max. continuous heater current	50 A
Dielectric strength	1,000 VAC (1 min)
Vibration resistance	50 Hz (approx. 10G)
Weight	E54-CT1: approx. 11.5 g; E54-CT3: approx. 50 g
Accessories (E54-CT3 only)	Contact: 2; Plug: 2

Current Transformer Dimensions

E54-CT1

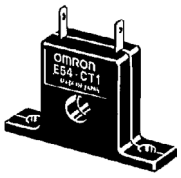

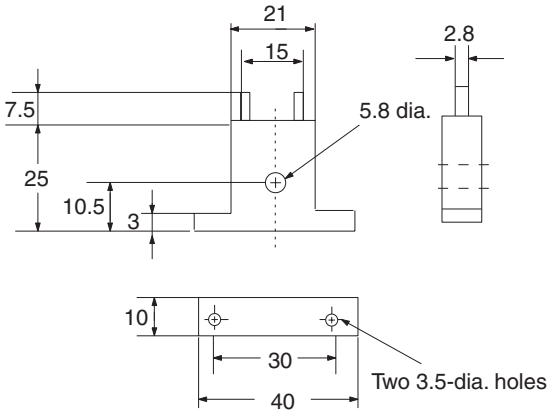

E54-CT3

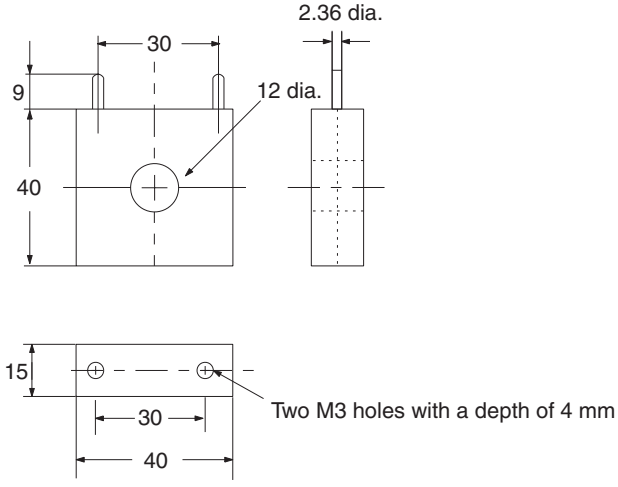

Current Transformer Circuit Diagram

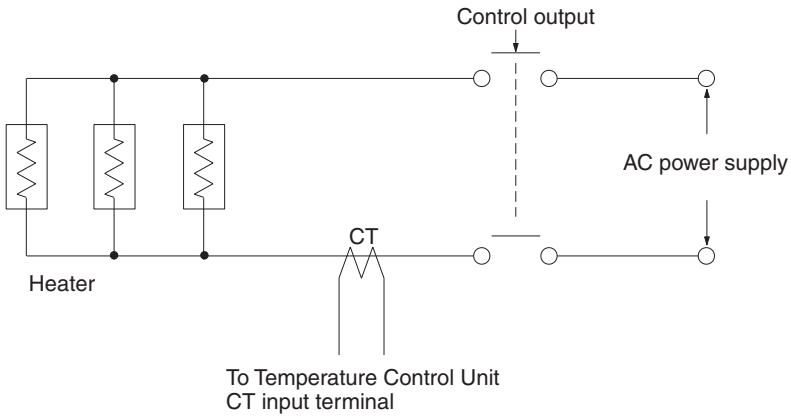

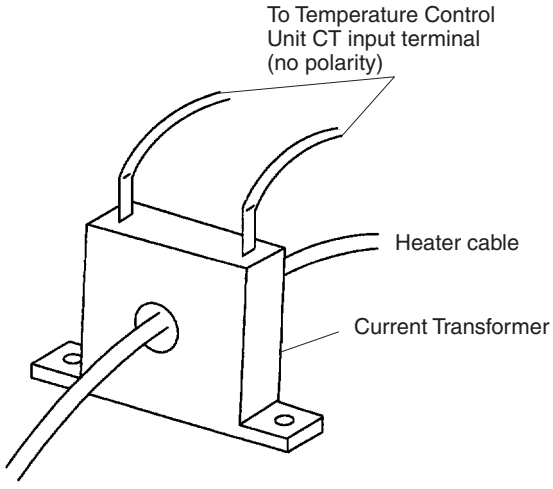

Appendix D
Dimensions

Temperature Control Unit

Weight: 360 g

Unit Dimensions

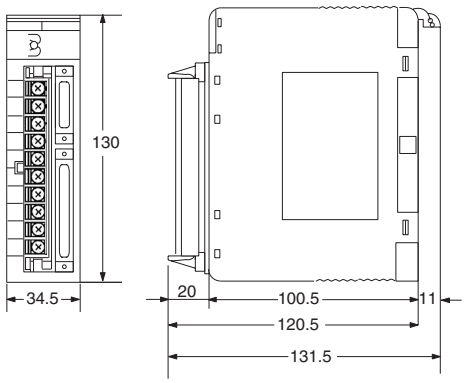

Mounting Dimensions

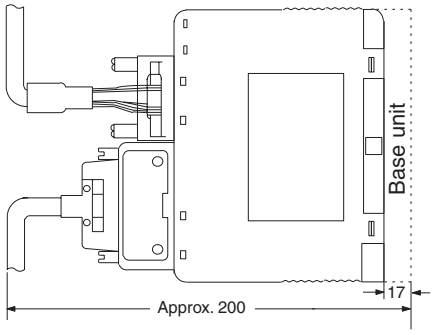

Data Setting Console

Weight: 120 g

Unit Dimensions

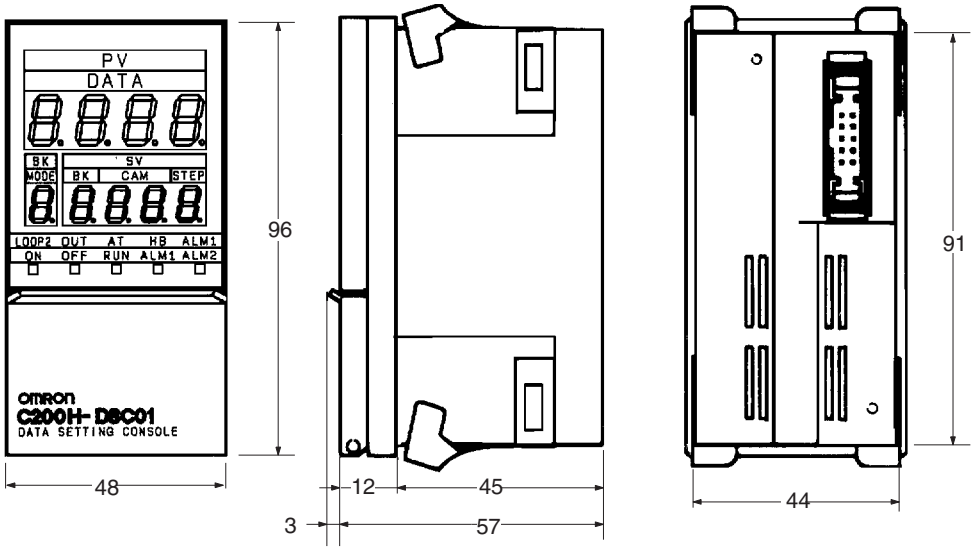

Mounting Dimensions

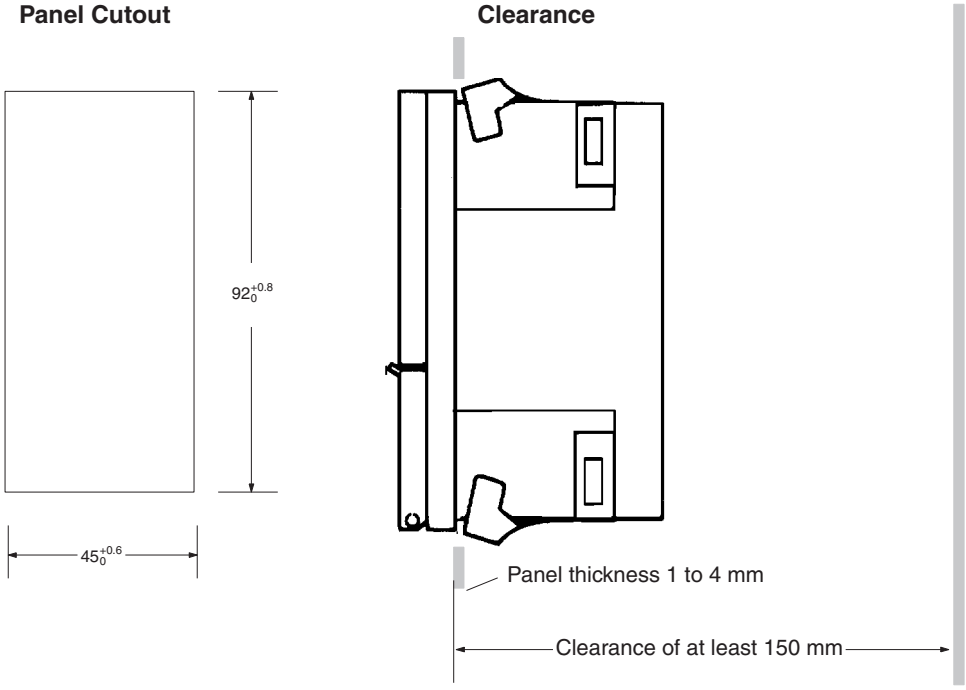

Allow a clearance of at least 150 mm behind the Data Setting Console when it is installed in the panel to allow cable connectors to be inserted. A clearance of 50 mm is sufficient if the rear panel can be opened.

Index

A–B

alarm hysteresis, 30
alarm mode setting, 29
allocating memory, 36
applications
  precautions, xviii
auto-tuning start/stop setting, 33
bank number setting, 32

C

command codes
  settings, 41
    EEPROM write/read command, 41
    RAM write command, 43
compensating conductors
  specifications, 15
Connector Terminal Block Converter Unit, 19
control output variable monitor setting, 31
control period setting, 31
copy bank setting, 32
cover
  removal and replacement, 11
CT input overflow error, 62
Current Transformer, 16

D

data flow, 23
data setting, 23
  operating procedure, 22
Data Setting Console
  connecting cable and precautions, 19
  features, 25
  mounting, 74
  parameter and setting tables, 26
  physical features, 24
data settings, 44
derivative time setting, 33
detecting errors, 62
Duplicate I/O Unit, 63

E

EEPROM error alarm, 63
EEPROM write/read command
  command codes
    settings, 41
error display, 28
errors
  data setting, 62
features, 2

F–H

Heater Burnout Alarm, 62
heater burnout current
  See also settings
heater burnout detection
  precautions and current ranges, 69
hysteresis setting, 32

I

I/O refresh, 59
indicators, 9
input shift value setting, 31
input wiring
  Platinum Resistance Thermometer, 14, 16
  precautions, 14
  thermocouple, 13
installation
  precautions, xviii
integral time setting, 33
memory contents, 38

M–O

operating environment
  precautions, xvii
operating in PROGRAM mode, 12
Operation and Function Setting, 12
operation timing, 58
output wiring, 16
  circuit diagrams, 17
  connectors and cable, 18
  diagrams, 17
  precautions, 18

P

PID control with feed-forward circuitry, 2
precautions, xv, 5

applications, xviii
general, xvi
operating environment, xvii
safety, xvi
programming
examples, 44, 48
proportional band setting, 33

R

RAM write command
command codes
settings, 43
read operation timing, 59
refresh
I/O, 59
Remote I/O Terminal, 19

S

safety precautions, xvi
selecting allocated memory, 36
sensors
setting type, 11
sensor-type setting, 33
Set Value display
upper and lower limits, 28
setting and displaying parameters
method, 28
settings
heater burnout current, 30
source, 11
Slave Rack
number of mountable Units, 4
Special I/O Unit error, 63
specifications
general, table, 65
standby sequence, 30
switch settings, 9, 10
switching memory contents, 11
switching memory contents and setting direction, 10
system configuration, 4

T

temperature alarm, 63
temperature measurements
ranges, 67
troubleshooting
CT input overflow error, 62
data setting errors, 62
duplicate I/O unit, 63
EEPROM error, 63
power supply, 64
RUN Indicator Unlit, 64
Special I/O Unit error, 63
temperature alarm, 63

U

Unit
models, 4
Unit components
dimensions, 74
Unit nomenclature, 8

Revision History

A manual revision code appears as a suffix to the catalog number on the front cover of the manual.

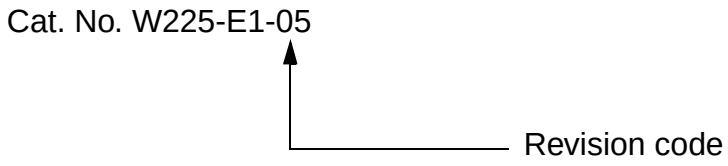

The following table outlines the changes made to the manual during each revision. Page numbers refer to the previous version.

Revision code	Date	Revised content
1	August 1993	Original production
1A	July 1995	**Page 40:** Note 1 corrected.
2	September 1996	**Pages 35 to 39:** Loop 1 STOP, Loop 2 STOP, and STOP data items added to the tables. **Pages 39 and 40:** *EEPROM Write/Read Command* title added to table and the *RAM Write Command* table added. **Page 48:** *4-3-5 I/O Refresh* added.
3	March 2000	Added precautions to beginning of manual and changed “C200H PC” to either “PC” or “CPU Unit” throughout the manual. **Page 3:** Added a table of applicable CPU Units. **Page 4:** Modified number of units mountable on Slave Rack in the table. **Page 4:** Added information on new functions. **Page 9:** Added information on Stop Bits and Stop Flags. **Page 11:** Changed screw tightening torque. **Pages 20, 21, 25:** Changed descriptions of data setting. **Page 23:** Added Stop Bit information to the Data Display note. **Page 30:** Added Stop Bit information to Changing the Settings. **Page 34:** Added memory allocation information for the CS1. **Page 45:** Modified sample program for write request. **Page 49:** Added programming examples for the CS1. **Page 53, 59:** Changed SR bit and restart bit. **Page 53:** Added information on cases where temperature control is not performed.
04	December 2001	**Page xiii:** Added Power Supply Units to WARNING sub-item. **Page 4:** Added C200H-CPU-22-E to Applicable CPU Units table. **Page 15:** Reversed A and B in Voltage/Current Output figure. **Pages 49 and 56:** Changed 23208 to 23209.
05	December 2005	"CS1" changed to "CS" throughout manual in reference to OMRON PC Series. **Page xii:** Safety precautions added. **Page xiv:** Two precautions added toward top of page and three corrections/ additions made to existing precautions. **Page 65:** Influence of temperature and influence of voltage specifications added, and note added.

OMRON Corporation
Control Devices Division H.Q.
Shiokoji Horikawa, Shimogyo-ku,
Kyoto, 600-8530 Japan
Tel: (81)75-344-7109/Fax: (81)75-344-7149

Regional Headquarters

OMRON EUROPE B.V.
Wegalaan 67-69, NL-2132 JD Hoofddorp
The Netherlands
Tel: (31)2356-81-300/Fax: (31)2356-81-388

OMRON ELECTRONICS LLC
1 East Commerce Drive, Schaumburg, IL 60173
U.S.A.
Tel: (1)847-843-7900/Fax: (1)847-843-8568

OMRON ASIA PACIFIC PTE. LTD.
83 Clemenceau Avenue,
#11-01, UE Square,
Singapore 239920
Tel: (65)6835-3011/Fax: (65)6835-2711

OMRON (CHINA) CO., LTD.
Room 2211, Bank of China Tower,
200 Yin Cheng Zhong Road,
PuDong New Area, Shanghai, 200120 China
Tel: (86)21-5037-2222/Fax: (86)21-5037-2200

OMRON

Authorized Distributor:

Cat. No. W225-E1-05

Note: Specifications subject to change without notice.

Printed in Japan

This manual is printed on 100% recycled paper.