Cat. No. W314-E1-1

C200H-MC221
Motion Control Unit

OPERATION MANUAL: INTRODUCTION

OMRON

C200H-MC221
Motion Control Unit

Operation Manual: Introduction

Produced June 1996

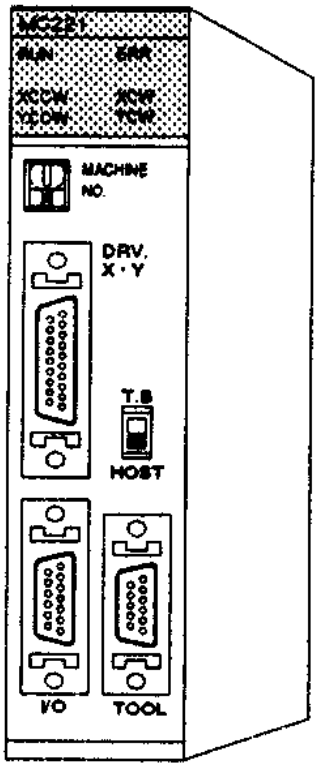

Notice:

OMRON products are manufactured for use according to proper procedures by a qualified operator and only for the purposes described in this manual.

The following conventions are used to indicate and classify precautions in this manual. Always heed the information provided with them. Failure to heed precautions can result in injury to people or damage to the product.

⚠ DANGER! Indicates information that, if not heeded, is likely to result in loss of life or serious injury.

⚠ WARNING Indicates information that, if not heeded, could possibly result in loss of life or serious injury.

⚠ Caution Indicates information that, if not heeded, could result in relatively serious or minor injury, damage to the product, or faulty operation.

OMRON Product References

All OMRON products are capitalized in this manual. The word “Unit” is also capitalized when it refers to an OMRON product, regardless of whether or not it appears in the proper name of the product.

The abbreviation “Ch,” which appears in some displays and on some OMRON products, often means “word” and is abbreviated “Wd” in documentation in this sense.

The abbreviation “PC” means Programmable Controller and is not used as an abbreviation for anything else.

Visual Aids

The following headings appear in the left column of the manual to help you locate different types of information.

Note Indicates information of particular interest for efficient and convenient operation of the product.

1, 2, 3... 1. Indicates lists of one sort or another, such as procedures, checklists, etc.

© OMRON, 1996

All rights reserved. No part of this publication may be reproduced, stored in a retrieval system, or transmitted, in any form, or by any means, mechanical, electronic, photocopying, recording, or otherwise, without the prior written permission of OMRON.

No patent liability is assumed with respect to the use of the information contained herein. Moreover, because OMRON is constantly striving to improve its high-quality products, the information contained in this manual is subject to change without notice. Every precaution has been taken in the preparation of this manual. Nevertheless, OMRON assumes no responsibility for errors or omissions. Neither is any liability assumed for damages resulting from the use of the information contained in this publication.

TABLE OF CONTENTS

PRECAUTIONS xi

1 Intended Audience xii
2 General Precautions xii
3 Safety Precautions xii
4 Operating Environment Precautions xii
5 Application Precautions xiii

SECTION 1 Introduction 1

1-1 CW and CCW 2
1-2 Feedback Pulse 2
1-3 Coordinate Systems 3
1-4 Applicable Machines 3
1-5 Wiring Precautions 4
1-6 System Configuration 6
1-7 Outline of the Interface Area 7
1-8 Data Configuration 7
1-9 Programs and Tasks 8
1-10 Manual and Automatic Operation 9

SECTION 2 Features 11

2-1 Features 12
2-2 Specifications 14
2-3 Outside Dimensions 15
2-4 Functions 16

SECTION 3 Servo System Principles and Precautions 19

3-1 Servo System 20
3-2 Motor Runaway 23
3-3 Wiring Check Function 25
3-4 Failsafe Circuits 26

SECTION 4 System Configuration 29

4-1 Basic System Configuration 30
4-2 Items Supplied by the User 31
4-3 Peripheral Devices 32

SECTION 5 Positioning 35

5-1 Positioning Controls 36
5-2 PTP Control 37
5-3 Linear Interpolation 38
5-4 Circular Interpolation 40
5-5 Interrupt Inching 41
5-6 Acceleration and Deceleration Curves 41
5-7 Operation Modes 42
5-8 Override Function 44
5-9 Backlash Compensation 45

SECTION 6 G Language 47

6-1 Introduction 48
6-2 G-language Symbols 51

TABLE OF CONTENTS

SECTION 7
Preparations for Operation 53

7-1 System Startup Procedures 54
7-2 Testing Equipment Configuration 55
7-3 Items to Be Prepared 55
7-4 Positioning Operations 56
7-5 Interface Area 58

SECTION 8
Test Operation 63

8-1 Mounting the Units 64
8-2 Connecting the Computer 65
8-3 Connecting the Teaching Box 68
8-4 Wiring I/O Connectors 70
8-5 Connecting Servodrivers 72
8-6 Wiring Input Units 73
8-7 Starting Up the PC 74
8-8 Setting Parameters 74
8-9 Saving Parameters 81
8-10 Transferring Parameters 82
8-11 Flash Memory Backup of Parameter 84
8-12 Creating MC Programs 85
8-13 Saving MC Programs 87
8-14 Transferring MC Programs 89
8-15 Flash Memory Backup of MC Program 91
8-16 Creating Ladder-diagram Programs 92
8-17 Checking Operation from the MCSS 94
8-18 Checking Operation from the Teaching Box 98

Glossary 103

Index 109

Revision History 113

About this Manual:

This manual provides an introduction to the features and basic operation of the C200H-MC221 Motion Control Unit and includes the sections described below.

Please read this manual and the other manuals related to the C200H-MC221 Motion Control Unit carefully and be sure you understand the information provided before attempting to install and operate the Motion Control Unit.

There are four manuals used with the C200H-MC221 Motion Control Unit (MC Unit). These manuals are listed in the following table. The suffixes have been left off of the catalog numbers. Be sure you are using the most recent version for your area. **Be sure to read the precautions in the following section.**

Name	Content	Cat. No.
C200H-MC221 Motion Control Unit Operation Manual: Introduction	Describes the features, applications, and basic operation of the Motion Control Units. Read this manual first before using a Motion Control Unit.	W314
C200H-MC221 Motion Control Unit Operation Manual: Details	Describes operation of the Motion Control Units in detail. Read the *Operation Manual: Introduction*, above, before attempting to read this manual.	W315
CVM1-PRS71 Teaching Box Operation Manual	Describes the operation of the Teaching Box connected to a Motion Control Unit.	W257
CV500-ZN3AT1-E MC Support Software Operation Manual	Describes creating control programs and setting operating parameters for MC Units using the MC Support Software.	W256

Section 1 describes fundamentals necessary for understanding this manual and for the successful operation of an MC Unit.

Section 2 describes the features and functions of the MC Unit.

Section 3 provides information on the servo system, basic mechanisms for positioning, and precautions to be heeded in using the system.

Section 4 provides information on the system configuration necessary for operating the MC Unit.

Section 5 provides information on position control as performed by the MC Unit.

Section 6 introduces the “G” language used for position control with the MC Unit.

Section 7 provides information on startup procedures, system configuration, and positioning operations using testing equipment, as well as explanations on the interface area necessary for creating ladder programs.

Section 8 describes the procedures involved in conducting tests using test equipment.

⚠WARNING Failure to read and understand the information provided in this manual may result in personal injury or death, damage to the product, or product failure. Please read each section in its entirety and be sure you understand the information provided in the section and related sections before attempting any of the procedures or operations given.

PRECAUTIONS

This section provides general precautions for using the Motion Control Units (MC Units) and related devices.

The information contained in this section is important for the safe and reliable application of the Motion Control Unit. You must read this section and understand the information contained before attempting to set up or operate a Motion Control Unit.

1 Intended Audience xii
2 General Precautions xii
3 Safety Precautions xii
4 Operating Environment Precautions xii
5 Application Precautions xiii

1 Intended Audience

This manual is intended for the following personnel, who must also have knowledge of electrical systems (an electrical engineer or the equivalent).

- Personnel in charge of installing FA systems.
- Personnel in charge of designing FA systems.
- Personnel in charge of managing FA systems and facilities.

2 General Precautions

The user must operate the product according to the performance specifications described in the operation manuals.

Before using the product under conditions which are not described in the manual or applying the product to nuclear control systems, railroad systems, aviation systems, vehicles, combustion systems, medical equipment, amusement machines, safety equipment, and other systems, machines, and equipment that may have a serious influence on lives and property if used improperly, consult your OMRON representative.

Make sure that the ratings and performance characteristics of the product are sufficient for the systems, machines, and equipment, and be sure to provide the systems, machines, and equipment with double safety mechanisms.

This manual provides information for using the MC Unit. Be sure to read this manual before attempting to use the Unit and keep this manual close at hand for reference during operation.

⚠ WARNING It is extreme important that Motion Control Units and related devices be used for the specified purpose and under the specified conditions, especially in applications that can directly or indirectly affect human life. You must consult with your OMRON representative before applying Motion Control Units and related devices to the above mentioned applications.

3 Safety Precautions

⚠ WARNING Never attempt to disassemble any Units while power is being supplied. Doing so may result in serious electrical shock or electrocution.

⚠ WARNING Never touch any of the terminals while power is being supplied. Doing so may result in serious electrical shock or electrocution.

4 Operating Environment Precautions

Do not operate the control system in the following places.

- Where the PC is exposed to direct sunlight.
- Where the ambient temperature is below 0°C or over 55°C.
- Where the PC may be affected by condensation due to radical temperature changes.
- Where the ambient humidity is below 10% or over 90%.
- Where there is any corrosive or inflammable gas.
- Where there is excessive dust, saline air, or metal powder.
- Where the PC is affected by vibration or shock.
- Where any water, oil, or chemical may splash on the PC.

⚠ **Caution** The operating environment of the MC Unit can have a large effect on the longevity and reliability of the system. Improper operating environments can lead to malfunction, failure, and other unforeseeable problems with the MC Unit. Be sure that the operating environment is within the specified conditions at installation and remains within the specified conditions during the life of the system.

5 Application Precautions

Observe the following precautions when using the MC Unit or the PC.

⚠ **WARNING** Failure to abide by the following precautions could lead to serious or possibly fatal injury. Always heed these precautions.

- Always ground the system to 100 Ω or less when installing the system to protect against electrical shock.
- Always turn off the power supply to the PC before attempting any of the following. Performing any of the following with the power supply turned on may lead to electrical shock:
  - Mounting or removing any Units (e.g., I/O Units, CPU Unit, etc.) or memory cassettes.
  - Assembling any devices or racks.
  - Connecting or disconnecting any cables or wiring.

⚠ **Caution** Failure to abide by the following precautions could lead to faulty operation or the PC or the system or could damage the PC or PC Units. Always heed these precautions.

- Use the Units only with the power supplies and voltages specified in the operation manuals. Other power supplies and voltages may damage the Units.
- Take measures to stabilize the power supply to conform to the rated supply if it is not stable.
- Provide circuit breakers and other safety measures to provide protection against shorts in external wiring.
- Do not apply voltages exceeding the rated input voltage to Input Units. The Input Units may be destroyed.
- Do not apply voltages exceeding the maximum switching capacity to Output Units. The Output Units may be destroyed.
- Always disconnect the LG terminal when performing withstand voltage tests.
- Install all Units according to instructions in the operation manuals. Improper installation may cause faulty operation.
- Provide proper shielding when installing in the following locations:
  - Locations subject to static electricity or other sources of noise.
  - Locations subject to strong electromagnetic fields.
  - Locations subject to possible exposure to radiation.
  - Locations near to power supply lines.
- Be sure to tighten Backplane screws, terminal screws, and cable connector screws securely.
- Do not attempt to take any Units apart, to repair any Units, or to modify any Units in any way.

⚠ **Caution** The following precautions are necessary to ensure the general safety of the system. Always heed these precautions.

- Provide double safety mechanisms to handle incorrect signals that can be generated by broken signal lines or momentary power interruptions.
- Provide external interlock circuits, limit circuits, and other safety circuits in addition to any provided within the PC to ensure safety.

SECTION 1
Introduction

This section describes fundamentals necessary for understanding this manual and for the successful operation of an MC Unit.

1-1 CW and CCW 2
1-2 Feedback Pulse 2
1-3 Coordinate Systems 3
1-4 Applicable Machines 3
1-5 Wiring Precautions 4
1-6 System Configuration 6
1-7 Outline of the Interface Area 7
1-8 Data Configuration 7
1-9 Programs and Tasks 8
1-10 Manual and Automatic Operation 9

1-1 CW and CCW

The abbreviations "CW" and "CCW" used in this manual to describe the operation of the MC Unit are defined as follows:

CW (Clockwise)

Clockwise is the direction in which the present position increases.

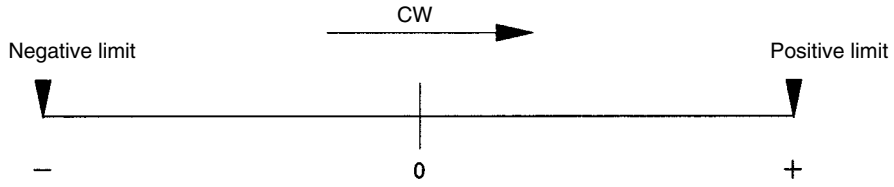

CCW (Counterclockwise)

Counterclockwise is the direction in which the present position decreases.

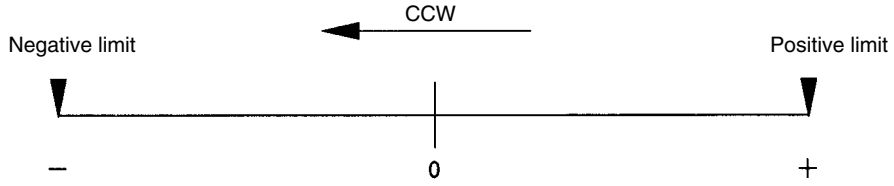

1-2 Feedback Pulse

Standard OMRON servomotors are designed for an advanced A-phase for forward rotation and an advanced B-phase for reverse rotation. The MC Unit is designed to comply with this phase advancement, allowing OMRON Driver Connecting Cables to be connected without modification.

Forward Rotation (Positive Speed Command)

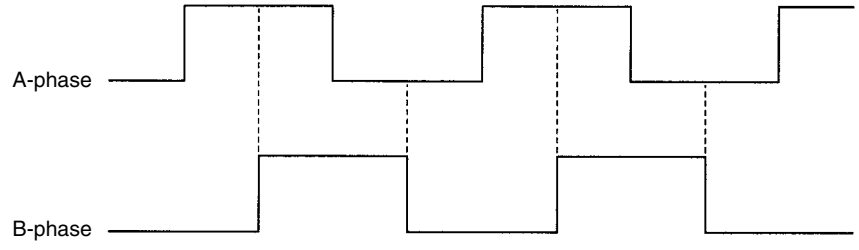

Reverse Rotation (Negative Speed Command)

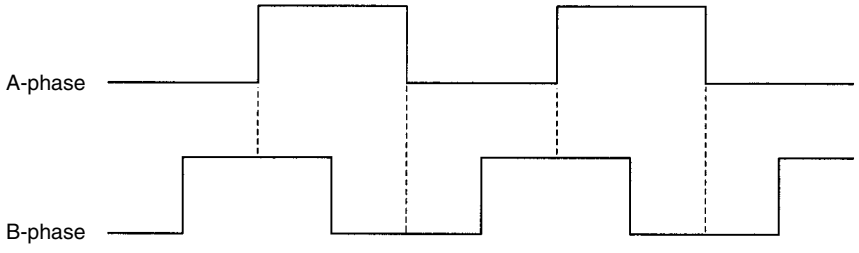

When using servomotors by other makers, check carefully the encoder specifications. If the definition differs from the ones given above, take one of the following actions:

- Reverse the B-phase wiring between the MC Unit and the servodriver. (Reverse the +B terminal and the –B terminal.)
- Set the machine parameter "encoder polarity" in the system parameters to "reverse rotation for encoder increase." It is initially set to the "forward rotation at the encoder increase."

Note For more information on the machine parameter "encoder polarity," refer to *MC Support Software Operation Manual*.

1-3 Coordinate Systems

Positioning operations using the MC Unit are performed based on two coordinate systems: a reference coordinate system and a workpiece coordinate system.

The reference coordinate system is the most fundamental one for positioning operations. The workpiece coordinate system is offset from the reference coordinate system by a specified amount, allowing the user to freely set a coordinate system.

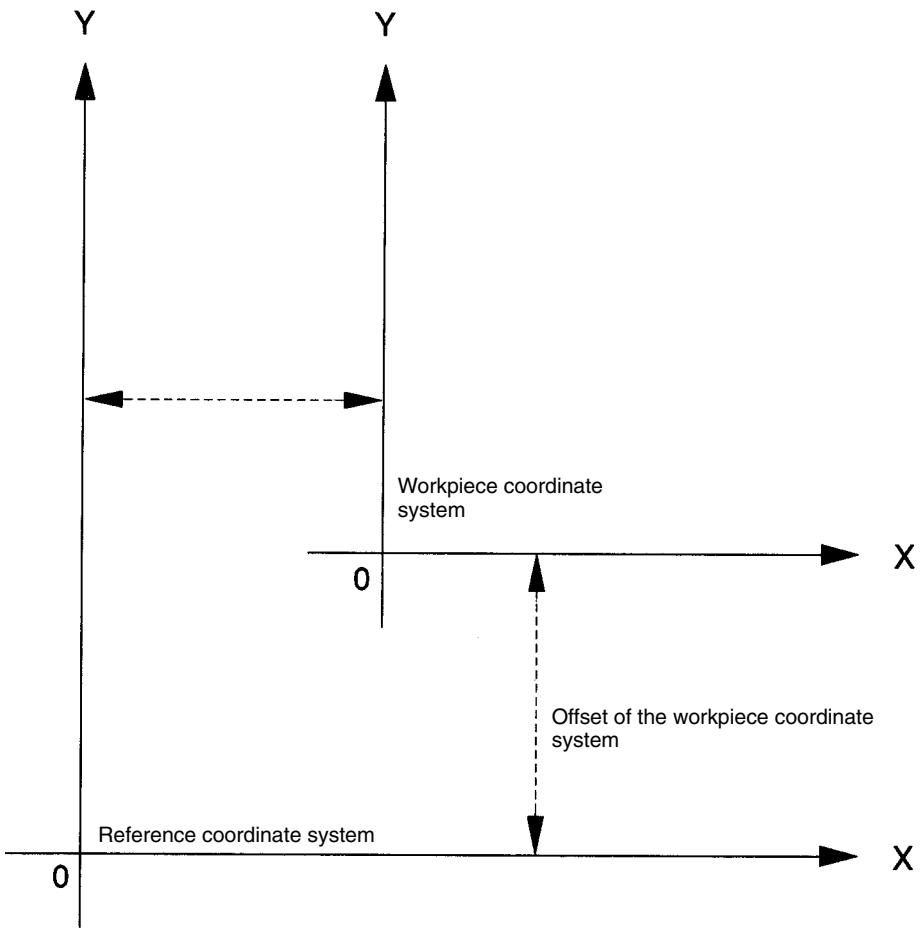

1-4 Applicable Machines

The MC Unit has been developed for use in simple positioning applications using servomotors. Depending on the machine being controlled, the accuracy of the MC Unit should be about five to tens times higher that the machine being controlled. Applicable machines are as follows:

1, 2, 3...

1. Conveyor machinery: X/Y tables, palletizers/depalletizers, loaders/unloaders, etc.
2. Assembling machinery: Simple robots (including orthogonal robots), simple automated assembling machines, etc.

Terminology

Palletizers/depalletizers: Devices used for loading goods onto pallets or for unloading them from pallets.

Loaders/unloaders: Devices that have shelves corresponding with the steps of a multistep press and used for inserting or removing all the materials at one time.

Orthogonal Robots

One-axis robot Two-axis robot

Horizontal Articulated Robots and Cylindrical Robots

The MC Unit is not designed to perform linear interpolation or circular arc interpolation with horizontal articulated robots or cylindrical robots. The MC Unit can, however, perform PTP control with these robots.

Horizontal Articulated Robots **Cylindrical Robots**

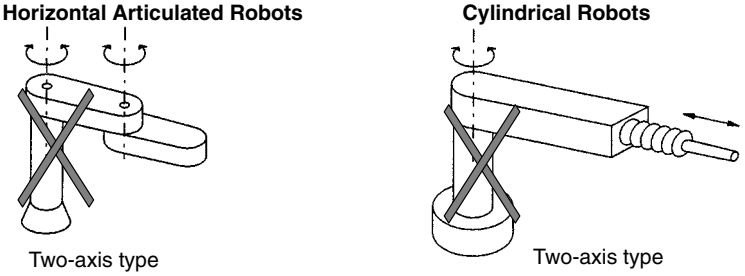

Two-axis type Two-axis type

1-5 Wiring Precautions

Heed the following precautions when wiring the MC Unit to the servodrivers and motors.

Electronically controlled equipment may malfunction because of noise generated by power supply lines or external loads. Such malfunctions are difficult to reproduce; hence, determining the cause often requires a great deal of time. The following tips should aid in avoiding noise malfunction and improving system reliability.

Use electrical wires or cables of designated sizes as specified in the instruction manual for the servodriver. Use larger size cables for the FG lines of the PC or the driver and ground them over the shortest possible distance.

Separate power cables (AC power supply lines and motor power supply lines) from control cables (pulse output lines and external input signal lines). Do not group the two types of cable together or place them in the same conduit. Use shielded cables for control lines.

For inductive loads such as relays or solenoid valves, connect surge absorbers.

Note Connect a surge-absorbing diode or surge absorber close to the relay. Use a surge-absorbing diode with a voltage tolerance at least five times greater than the circuit voltage.

DC Relay **AC Relay**

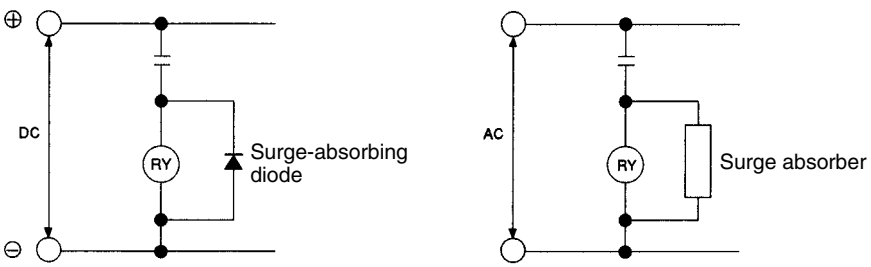

Solenoid

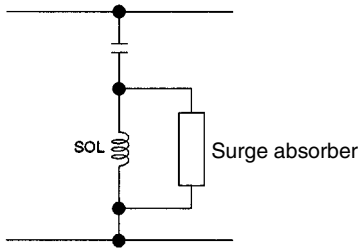

Noise may be generated on the power supply line if the same power supply line is used for an electric welder or electrical discharge unit. Provide an insulating transformer and a line filter in the power supply section to remove such noise.

It is recommended that twisted-pair cables be used for power supply lines. Use adequate grounds (i.e., to 100 Ω or less) with a wire cross section of 1.25 mm^2 or greater.

Use twisted-pair shielded cables for the control voltage output signals and the feedback input signals.

For the control voltage output signals, wire a maximum of two meters between the MC Unit and the servodriver.

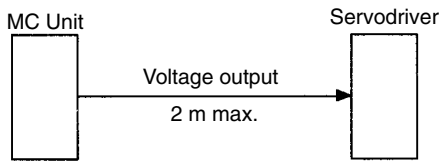

Wire the distance between the MC Unit and the feedback pulse generator (i.e., encoder or the servodriver) as follows:

- When the feedback pulse is output from a line driver, wire a maximum length of 20 meters.

Line Driver Output

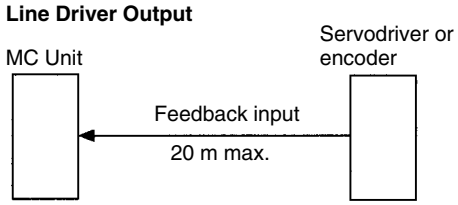

Note The input terminals that operate the 24-V system are isolated with photocouplers to reduce external noise effects on the control system. Avoid connections between the analog control voltage ground (AG) and the 24-V system ground (DC GND).

1-6 System Configuration

The following diagrams shows an overview of the system configuration of the MC Unit and related devices.

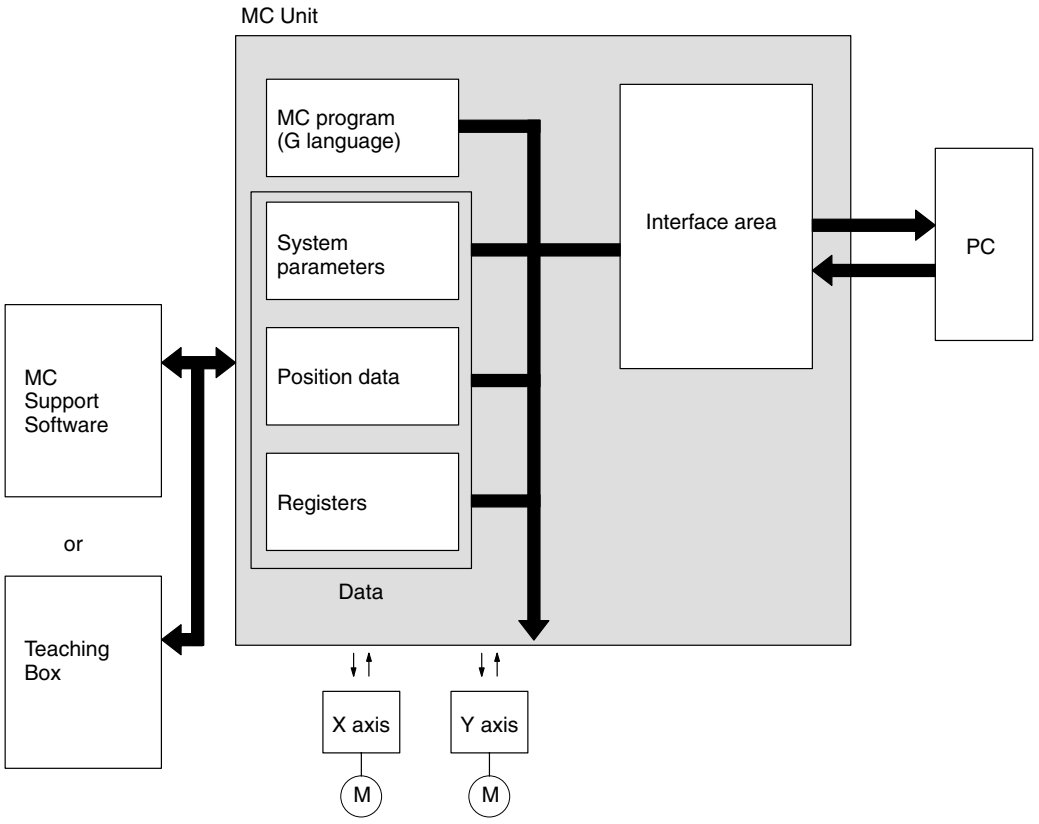

The MC Unit receives commands from the PC through the interface area and executes the MC program to control the servomotors completely independent from the ladder-diagram program of the PC.

The MC programs, system parameters, and position data that are required for operating the MC Unit are set using the MC Support Software.

Note For further information on the MC program (G language), refer to *Section 6 G Language*.

For further information on the MC Support Software and the Teaching Box, refer to *Section 4 System Configuration*.

For further information on the interface area, refer to *1-7 Outline of the Interface Area* and *7-5 Interface Area*.

For further information on data, refer to *1-8 Data Configuration*.

1-7 Outline of the Interface Area

The interface area allows data such as commands from the PC, tasks of the MC Unit, and axis status, to be transferred between the PC and the MC Unit.

Interface Area

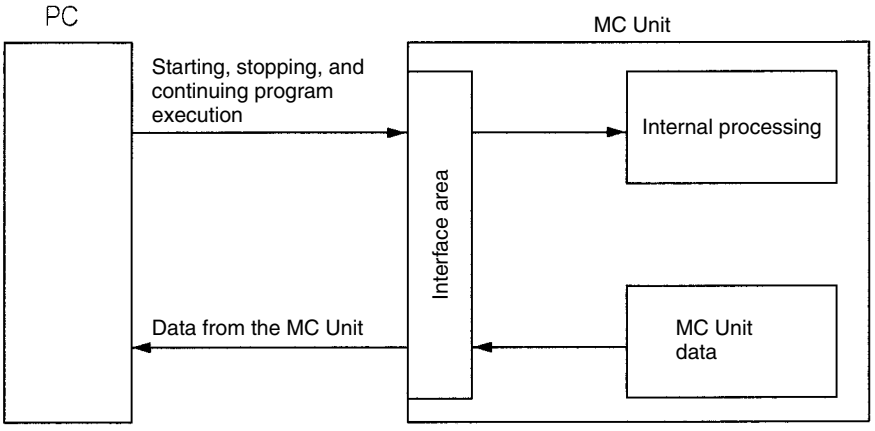

To control the interface area from the PC, it is necessary to allocate I/O word and a DM Area words to the MC Unit and to create a ladder program.

Refer to *7-5 Interface Area* for more information on the I/O word and DM Area word allocation and on the function of the allocated words.

Note For further information on the interface area, refer to the *MC Unit Operation Manual: Details*.

1-8 Data Configuration

The MC Unit handles the following three types of data:

System parameters
Position data
Registers

Programs created in the G language are not handled as data.

Types of Data

Name of data	Description
System parameters	System data processed by the MC Unit such as the number of axes used, number of tasks, feed rates (speeds) and operating ranges is stored as system parameters. The system parameters are classified into several groups.
Position data	Position data specifies positions for up to 2000 points. Position data are addressed using addresses A0000 to A19999 in G-language programs.
Registers	Registers are used to point to position data. There are 32 registers addressed using addresses E00 to E31.

System parameters and position data can be easily set using the MC Support Software. When the parameters and position data set by the MC Support Software are transferred to the MC Unit, they are stored in the system parameter area and position data area. Some of the system parameters and position data can be transferred to the MC Unit through the interface area.

Note Refer to the *MC Support Software Operation Manual* for information on setting system parameters and position data.

Refer to the *MC Unit Operation Manual: Details* for more information on data and data transfer.

1-9 Programs and Tasks

The MC Unit can perform up to two tasks. (A task is a unit of execution for a program.)

By executing two tasks at the same time, the MC Unit can perform the same functions as done by two NC controllers.

The number of tasks and axes to be used are set in advance using the MC Support Software by editing unit parameters.

Number of Tasks and Axes

The X axis and Y axis are available. Each axis can be used in only one task, i.e., any axis assigned to one task cannot be used for another task.

Example 1: 2 Tasks and 2 Axes

Example 2: 1 Task and 2 Axes

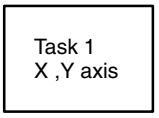

Tasks and Blocks

The MC Unit is capable of storing a total of 800 blocks of programming. The maximum number of blocks that can be executed in each task depends on the number of tasks as shown in the following table. These figures include subprograms.

Number of tasks	Maximum number of blocks
1	800 blocks
2	400 blocks/task

Tasks and Programs

The maximum of 100 programs can be managed by the MC Unit. The number of programs that can be managed per task depends on the number of tasks as shown in the following table. These figures include subprograms.

Number of tasks	Maximum number of programs
1	100 programs
2	50 programs/task

Note

1. Each program number can be used only once; the same program number cannot be used in a different task.
2. Refer to *6-1 Introduction* for further information on the number of blocks and programs.

1-10 Manual and Automatic Operation

Each task of the MC Unit can be executed either in manual or automatic mode. In the automatic mode, MC programs created in the G language are executed. In the manual mode, manual commands from the PC or the Teaching Box are executed.

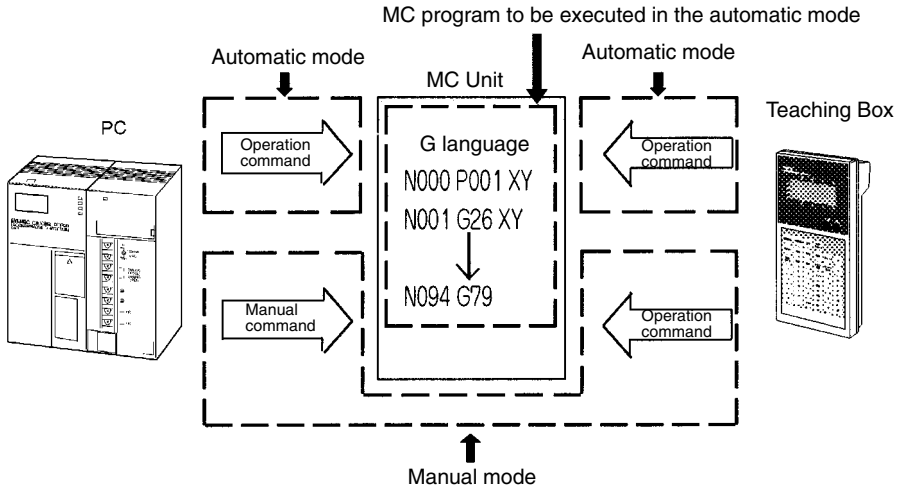

The interface area is used for executing the commands in the manual mode or the MC program in the automatic mode.

There are ten manual commands, including the origin search command, home shift command, jogging command, etc.

Note Refer to *7-5 Interface Area* for further information on the interface area.

Command	Description
Origin search	For determining origins of mechanical system when using an INC encoder.
Reference origin return	For returning to the reference origin.
Jogging	For moving the axis at a fixed speed.

Note Refer to the *MC Unit Operation Manual: Details* for information on manual operation.

SECTION 2
Features

This section describes the features and functions of the MC Unit.

2-1 Features 12
2-2 Specifications 14
2-3 Outside Dimensions 15
2-4 Functions 16

2-1 Features

The C200H-MC221 Motion Control Unit is designed to control positioning using servomotors.

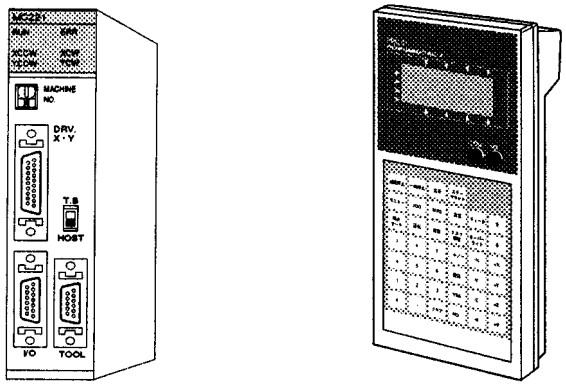

The MC Unit provides the following features.

Easy Control through Multi-task G Language

The G language is used to program the MC Unit. Each program is controlled as a task completely independent from other tasks. Programs can be easily executed by simply designating a program number and giving a run command from the ladder-diagram program.

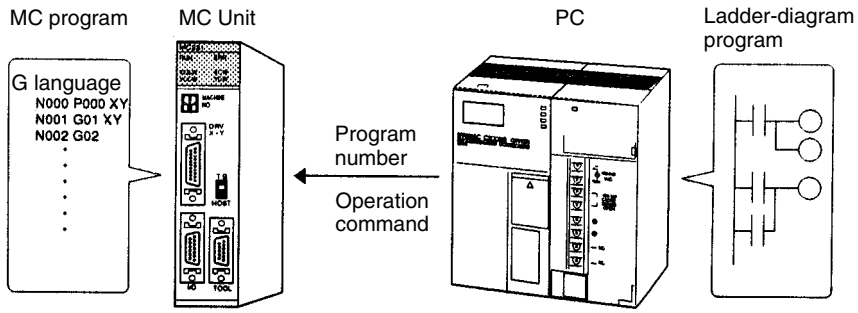

Reduced Machine Wear

In addition to the traditional trapezoidal curve, an S curve has been adopted to reduce vibration and extend the service life of the controlled machine.

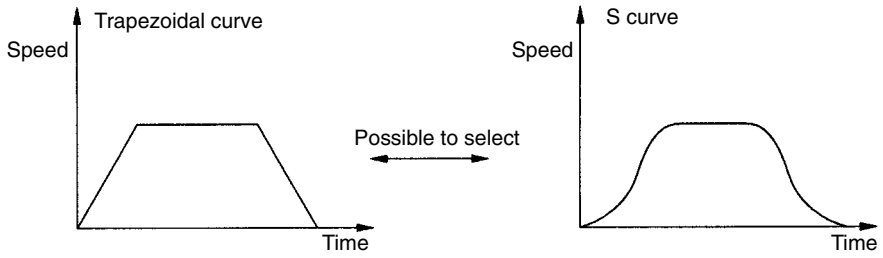

Note Refer to *5-6 Acceleration and Deceleration Curves* for further information on the trapezoidal and S curves.

General-purpose Input Signals

Starting and stopping can be controlled without the use of the PC. The time required until a control command voltage is output is shorter than the time necessary to start the Unit by a command from the ladder-diagram program.

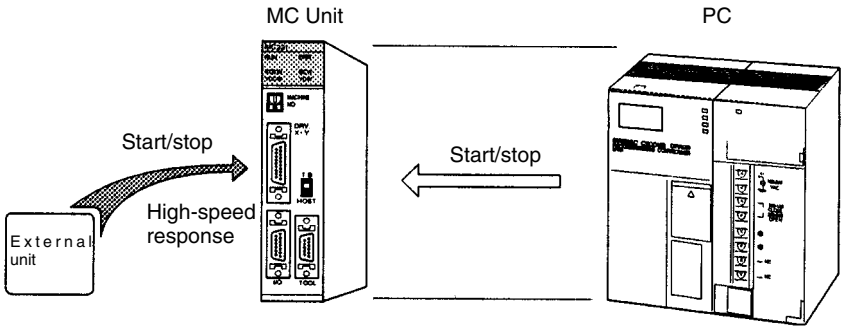

Manual Pulse Generator Supported

By connecting an MPG (Manual Pulse Generator) to the Y axis, the MPG can be used for X-axis feeding.

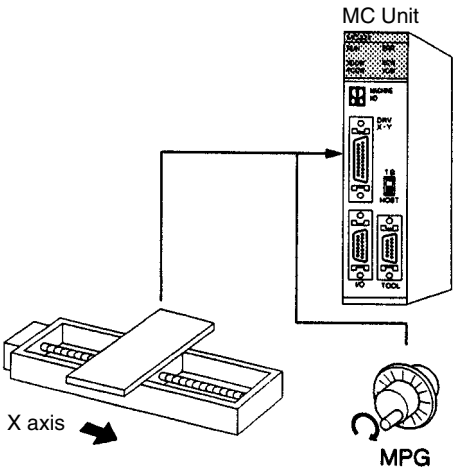

Interrupt Inching

The MC Unit has an interrupt inching function, thus performing high-precision inching at high speed with an external input signal.

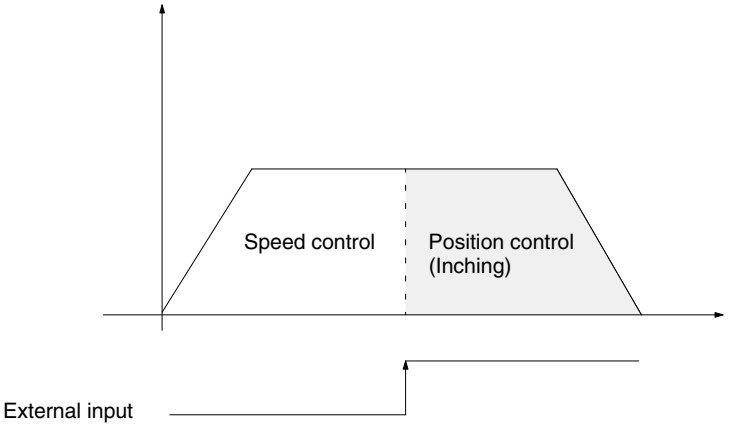

High-speed Response

The response speed of the MC Unit will increase if the MC Unit is used in combination with the C200HX, C200HG, or C200HE. By using the Intelligent I/O Write instruction with the C200HX, C200HG, or C200HE, position data transfer and program start notice can be executed in a single cycle.

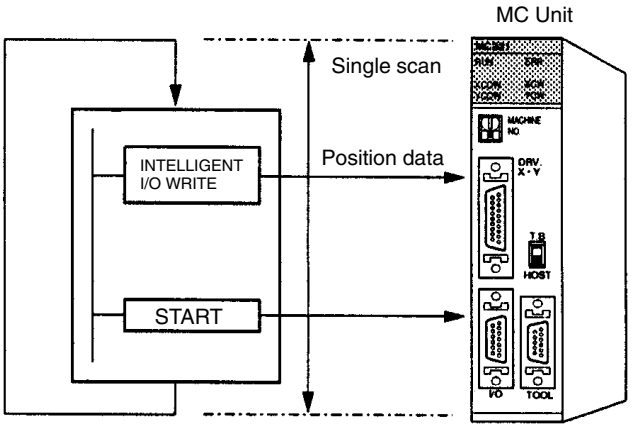

2-2 Specifications

General Specifications

Item	Specifications
Power supply voltage	5 VDC (from Backplane.)
	24 VDC (from external power supply.)
Voltage fluctuation tolerance	4.75-5.25 VDC (from Backplane.)
	21.6-26.4 VDC (from external power supply.)
Internal current consumption	0.65 A or less for 5 VDC (with Teaching Box connected: 0.85 A or less)
	0.2 A or less for 24 VDC
Weight	500 grams or less (Connectors excluded)
External dimensions	130.0 x 34.5 x 100.5 mm (H x W x D)

Specifications other than those shown above conform to those for the SYSMAC C200H/C200HS/C200HX/C200HG/C200HE Series.

2-3 Outside Dimensions

C200H-MC221

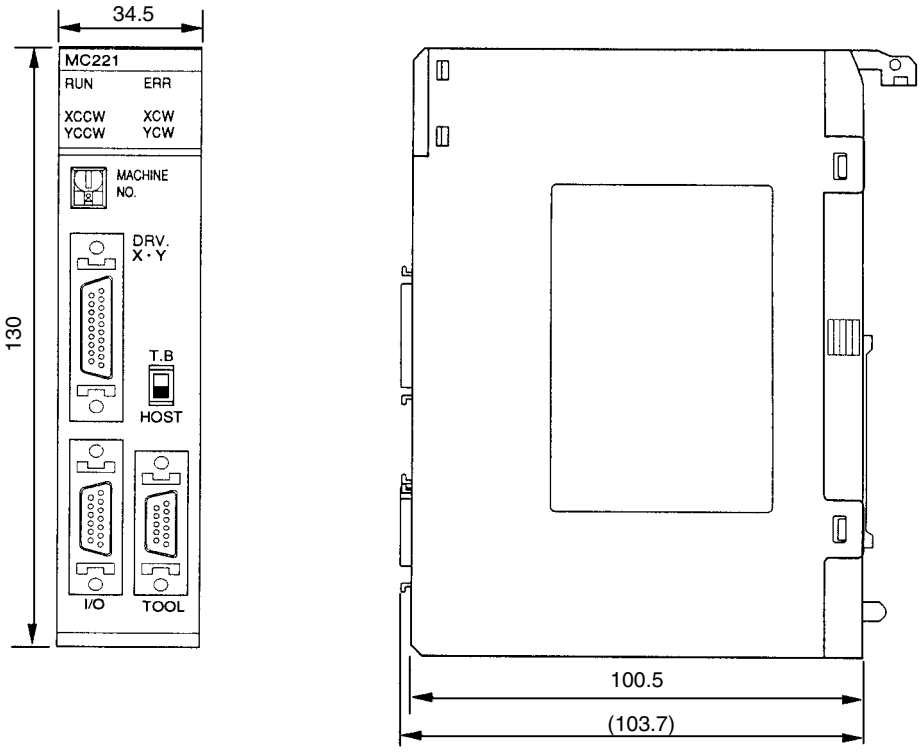

Dimensions with the Unit Mounted

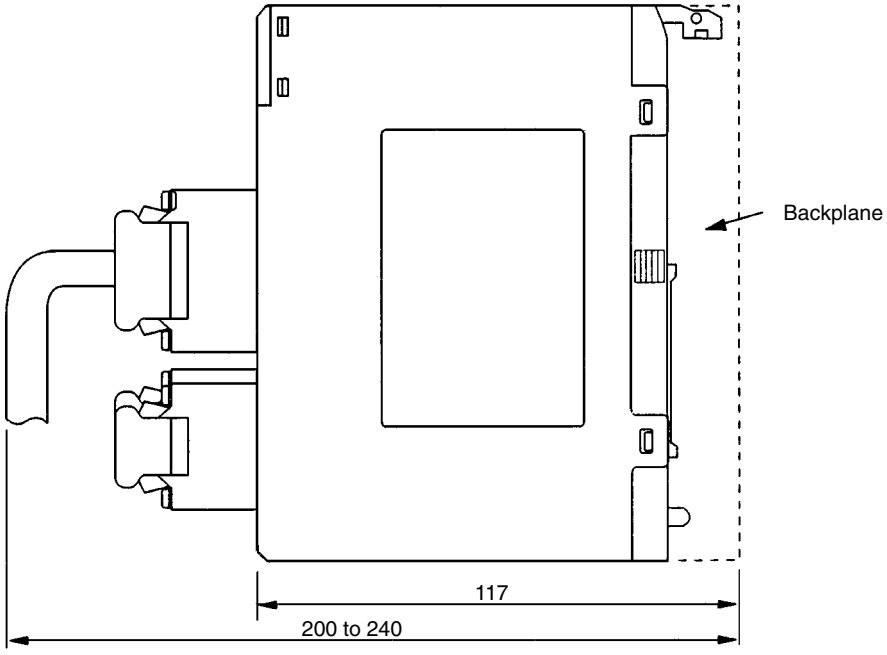

Note When mounting this Unit to a C200H PC and using the 3G2A6-PRO15-E Programming Console, use the third slot or further from the CPU.

2-4 Functions

The following tables summarize the capacity and functions of the MC Unit.

Item		Contents
Number of I/O words		20 words (Occupies slots for two Units)
External connected devices		IBM PC/AT or compatible, Teaching Box (see note 1), and MPG (manual pulse generator) (see note 2)
Controlled driver		Analog Input Servodriver
Control	Control method	Semi-closed loop using incremental encoder (speed command voltage output)
	Number of controlled axes	2 axes max.
	Number of simultaneously controlled axes	2 axes max.
	PTP (independent) control	Execution by independent programs, operation modes for each axis
Positioning	Linear interpolation	Linear interpolation for maximum of two axes
	Circular interpolation	Circular interpolation for two axes on a plane
	Interrupt inching	Inching of an axis with interrupt input to the axis
Speed control		Speed control of up to two axes from 1 to 1,000,000 pps (after quadruplication)
Control unit	Minimum unit settings	1, 0.1, 0.001, 0.0001
	Units	mm, inch, degree, pulse
Maximum command value		–39,999,999 to +39,999,999

Note

1. A personal computer and the Teaching Box cannot both be connected to the MC Unit.
2. The MPG must be connected to the Y-axis encoder input. Therefore, only the X-axis can be controlled with the MPG.
3. When displaying units in MC Support Software as anything other than pulses, first change the display unit and then set the amount of workpiece movement by setting the pulse rate.
4. The maximum position command values are as shown in the following table for each minimum setting unit.

Minimum setting unit				
1	**0.1**	**0.01**	**0.001**	**0.0001**
–39999999 to +39999999	–3999999.9 to +3999999.9	–399999.99 to +399999.99	–39999.999 to +39999.999	–3999.9999 to +3999.9999

The maximum command value ranges may become smaller than those shown above depending on the pulse rate. The maximum command value must be set to satisfy the following two conditions:

- Maximum command value (C) ≤ 1073741823 x P
- Maximum command value (C) ≤ 39999999 (C)

P: Pulse rate (Pulse/pulse, mm/pulse, degrees/pulse and inch/pulse)
C: Minimum setting unit (1, 0.1, 0.01, 0.001, 0.0001)

Example: If the minimum setting unit is 0.01 and pulse rate is 0.0001, the maximum command value can be calculated as follows:

1073741823 x 0.0001=10734.1823 < 399999.99

Therefore, the maximum command value range is between –10734.18 and 10734.18 (because the minimum set range is 0.01).

Item		Contents	
External I/O	Peripheral device	One serial channel (selectable) Teaching Box: RS-422 (9,600 bps) Personal Computer: RS-422 (9,600 bps) or RS-232C (9,600 bps)	
	Encoder	Line receiver input: For two axes (250 kpps before multiplication) Multiplication factor fixed at 4. (See note 1.)	
	Servodriver relationships	The following signals are each provided for two axes: Input: Driver alarm signal Output: Driver alarm reset signal High-speed command voltage output (±10 V) Operation command output	
	Individual axis control (See note 1.)	The following signals are each provided for two axes: Input: CCW limit input CW limit input Origin proximity input Immediate stop input	
	Others (See note 2.)	Two general inputs	
Acceleration/deceleration curve		Trapezoid or S curve	
Acceleration/deceleration time		0 to 9,998 ms, which can be set separately for acceleration and deceleration (in 2-ms units).	
Feed operations	Rapid feed speed	Example: 36.86 m/min	Conditions Encoder resolution: 2,048 p/r Motor speed: 4,500 r/m Control unit: 0.001 mm/pulse
	Interpolation feed speed	Example: 36.86 m/min	
	Rapid feed override	0% to 100%	Setting unit: 0.1%
	Interpolation feed override	0% to 199%	
	Jog feed override	0% to 100%	

Note 1. Power supply must be provided by the user.

2. When a manual pulse generator is connected to the Y axis, the multiplication factor is fixed at 1.

Item			Contents
Operation modes	Automatic	Automatic operation	Automatic operation by program.
	Manual	Jogging	Moves axes continuously by manual operation.
		Handle feed	Moves axes by MPG.
		Multiplication rate selection	Specifies the rate per pulse during handle feed operation.
		Manual origin search	Searches for mechanical origin.
		Manual origin return	Moves to origin in standard coordinate system.
Origin return	Manual origin return		Manually returns to origin in standard coordinate system.
	Automatic origin return		Automatically returns to origin in standard coordinate system.
	Workpiece origin return		Automatically returns to origin in workpiece coordinate system.
Zone setting			8/axis
Optional inputs			7 points (inputs for block control referenced by special G codes) Two of the 7 points can be designated as general inputs for the MC Unit.
Program and data retention	MC Unit		Flash memory backup (see note 1)
	External peripheral devices		Personal computer diskette or hard disk

Item		Contents
Self-diagnostic function		Detection of memory corruption Detection of disconnected lines
Error detection function		Error counter alarm / Overtravel Error counter overrun / Immediate stop CPU error / Unit number error Communication error (Teaching Box) / Driver alarm detection Software limit overrun / EEPROM error Z-phase error / Flash memory error
Task program management	Number of tasks	2 max. (program execution units)
	Number of programs	The maximum number of programs differs according to the number of tasks. When 1 task is used: 100 When 2 tasks are used: 50/task
	Program capacity	The maximum program capacity differs according to the number of tasks. When 1 task is used: 800 blocks When 2 tasks are used: 400 blocks/task
	Position data capacity	2,000 max. (when only one axis is used)
	Number of registers	32 (Mainly used for specifying position data numbers.)
	Sub-program nesting	5 levels max.
Task control	Program number designation	Specifies the number of the program to be executed.
	Cycle start	Executes the program
	Single block	Executes the program one block at a time.
	Pause	Temporarily halts program execution.
	Control block end	Forcibly ends execution of a block.
	Error reset	Resets a task in which an error has occurred.
	Optional inputs	Specifies input information to be referenced by special G code (7 points).
	Teaching	Creates position datas for each task.
Auxiliary function	M code	0 to 999
Axis control	Current position preset	Changes the current position to any coordinates.
	Servo-lock	Creates a position loop and turns ON the operation command output to the servodriver.
	Servo-free	Cancels the position loop and turns OFF the operation command output to the servodriver.
	In-position	Pulses can be set within a range of 0 to 999.
	Backlash compensation	Pulses can be set within a range of 0 to 999.
	Driver alarm reset	Resets servo-driver alarm.
Data transfer		Transfers position data and parameters between the PC and MC Unit. (See note 2.) The data transfer speed of the MC Unit will increase if the MC Unit is used in combination with the C200HX, C200HG, or C200HE.

Note 1. The number of write operations to the flash memory is limited to approximately 100,000 times.

2. Some parameters can only be received by the MC Unit.

SECTION 3
Servo System Principles and Precautions

This section provides information on the servo system, basic mechanisms for positioning, and precautions to be heeded in using the system.

3-1 Servo System 20
3-2 Motor Runaway 23
3-3 Wiring Check Function 25
3-4 Failsafe Circuits 26

3-1 Servo System

The servo system used by and the internal operations of the MC Unit are briefly described below.

Semi-closed Loop System

The servo system of the MC Unit uses a semi-closed loop system. This system is designed to detect actual machine movements by rotation of the motor in relation to a target value. It computes the error between the target value and actual movement, and zeroes the error through feedback.

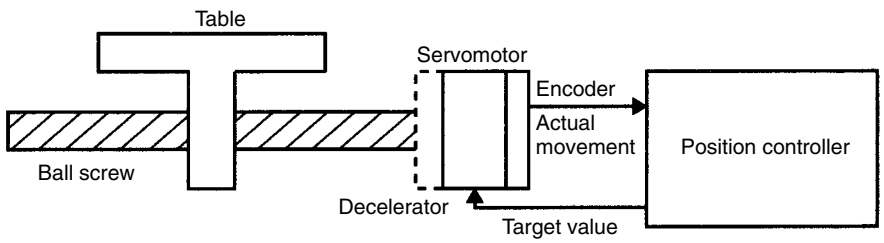

Semi-closed loop systems occupy the mainstream in modern servo systems applied to positioning devices for industrial applications.

Internal Operations of the MC Unit

Commands to the MC Unit, speed control voltage to the servodriver, and the feedback signals from the encoder are described in the next few pages.

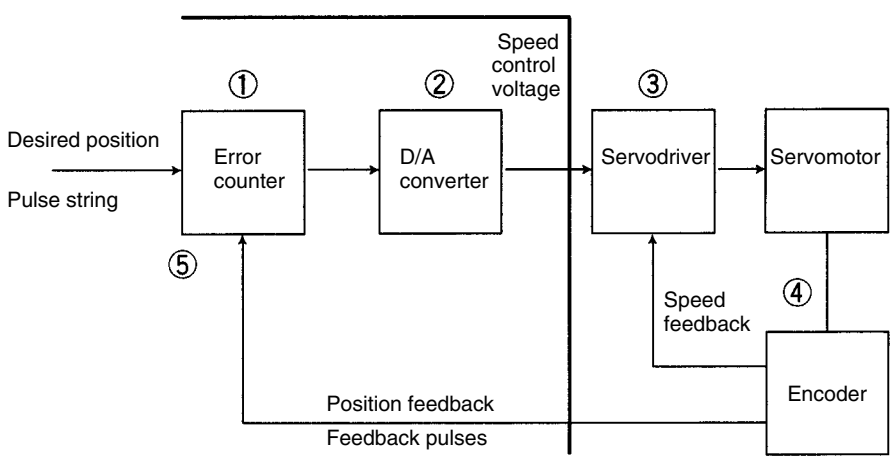

1, 2, 3...

1. The error counter receives a target position in units of encoder pulses. This is called a pulse string.
2. The error counter is directly connected to the D/A converter where the pulses received by the error counter are converted to analog voltages. These analog voltages are sent to the servodriver as the speed control voltages.

3. When the speed control voltage is received by the servodriver, it rotates the motor at a speed corresponding to the speed control voltage. The rotational speed is in proportion to the speed control voltage.

Servodriver Speed Characteristics

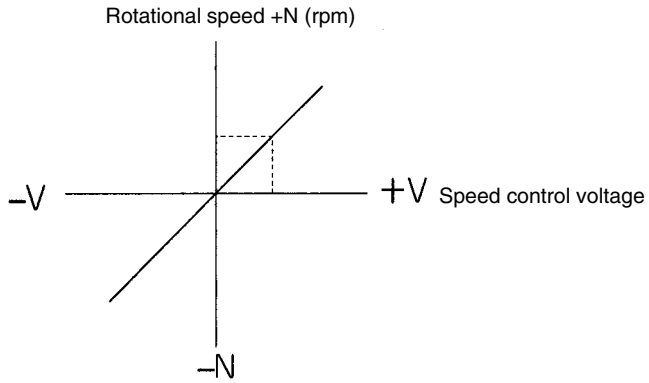

4. The rotary encoder directly connected to the motor axis rotates in sync with the motor and generates feedback pulses.
5. The feedback pulses are subtracted until the error counter goes to zero. When the error counter goes to zero, the speed control voltage to the servodriver becomes zero and the motor stops rotating.

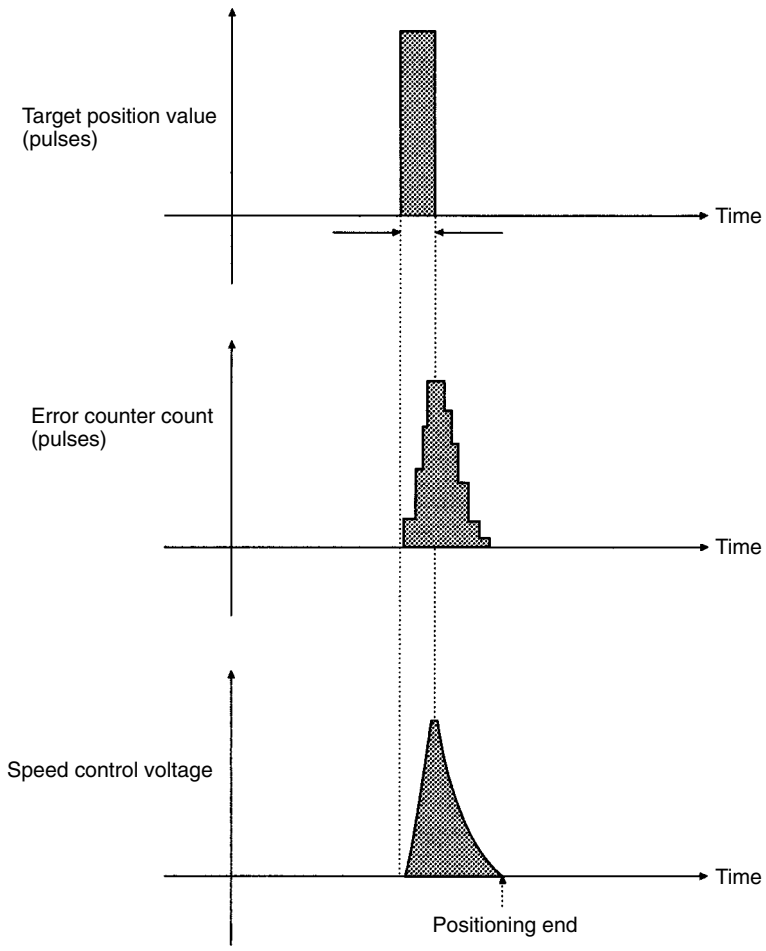

6. Unless the target position is given, the error counter constantly maintains the stopped position.

7. If the motor axis moves slightly due to a drift in the driver or voltage output, the error counter receives a feedback pulse from the rotary encoder and a speed control voltage is output in the reverse direction, causing the motor to rotate toward its original position. This corrective operation for maintaining the present position is called servolock or servoclamp.

8. Using this principle, positioning with acceleration and deceleration is executed by continuously setting target positions in the error counter.

9. The target position set in the error counter becomes the error counter count as shown below. The count is converted to a speed control voltage for the servodriver to control the motor.

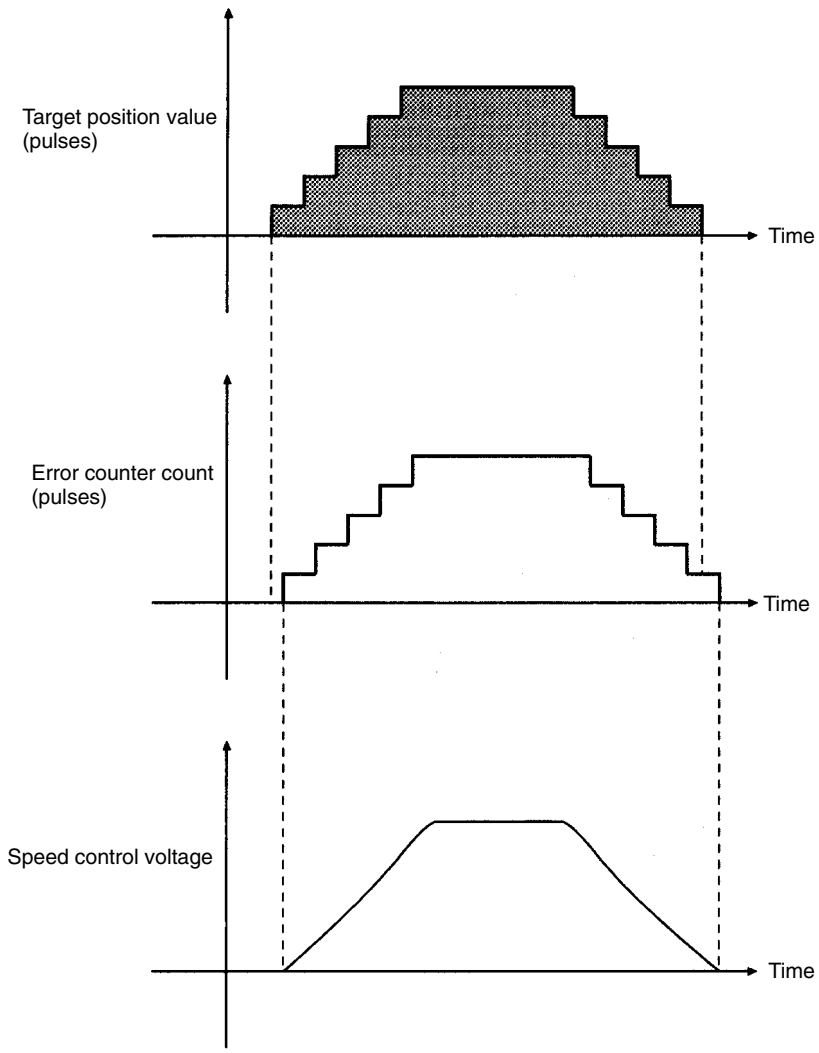

Thus, the position equals the total count of target positions (shaded area in the figure), and the speed will depend on the target position value per unit time.

3-2 Motor Runaway

In a servo system employing a servomotor, faulty or disconnected wiring may cause the servomotor to run out of control. Therefore, careful attention must be paid to preventing faulty or disconnected wiring.

When the wiring is correct, the servomotor maintains the stopped position through corrective operations as long as a position loop is formed and servolock is in effect.

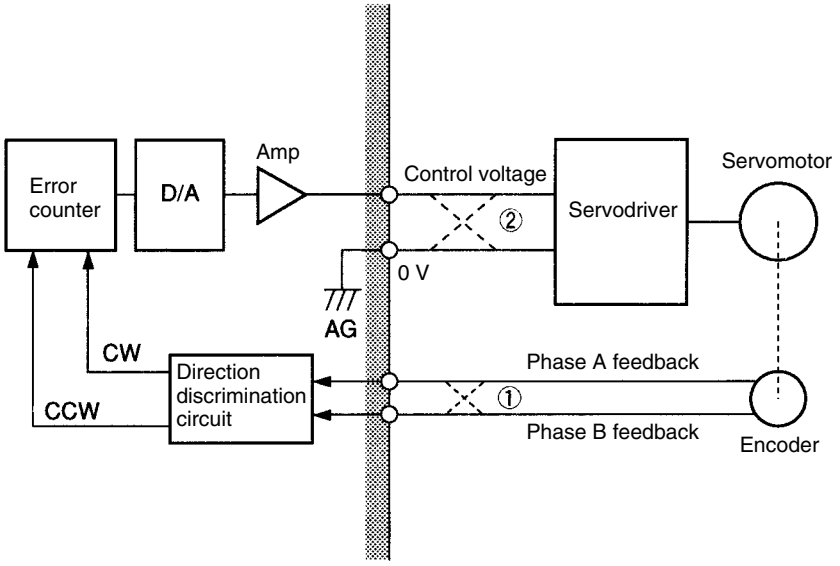

If the motor rotates in the CW direction due to a factor such as temperature drift, it is detected by the encoder and the internal error counter of the Motion Control Unit is notified of the direction and amount of rotation by means of feedback signals given by the encoder.

The count of the error counter is ordinarily zero unless otherwise designated. When the motor moves in the CW direction, the feedback signal transfers the direction and amount of movement as a count to the error counter. Then the Motion Control Unit outputs a control voltage to rotate the motor in the CCW direction so as to zero this count figure.

The control voltage is output to the servodriver, and the motor rotates in the CCW direction. Again, when the motor rotates in this CCW direction, the encoder detects the direction and amount of movement and notifies the error counter in the Motion Control Unit with feedback signals to subtract and zero the count figure.

This position loop subtracts the count in the error counter to zero it.

Runaway Due to Faulty Wiring

If the phase-A and phase-B feedback input lines are wired in reverse (crossed dotted lines at 1 in the figure), the servolock will not be effective and the motor will run out of control.

1, 2, 3...

1. If the motor rotates in the CW direction due to drift or some other cause, the encoder detects the direction and amount of movement and transmits feedback signals to the error counter in the Motion Control Unit.
2. If the phase A and phase B feedback input lines are wired in reverse, the error counter receives the information as a rotation in the CCW direction.
3. As a result, the error counter having a count in the CCW direction attempts to zero the count by outputting a control voltage to the motor driver in the CW direction.
4. The servomotor rotates in the CW direction, repeating the above steps 1. to 3. Eventually, the motor runs out of control.

Runaway can occur not only from reversed wiring of phases A and B of the feedback inputs, but also from reversed wiring of the speed control voltage and the ground lines (crossed dotted lines at 2 in the figure above).

Runaway Due to Disconnected Wiring

The servomotor runs out of control not only when the position loop is not correctly formed but also when the position loop is not interrupted due to disconnected wiring.

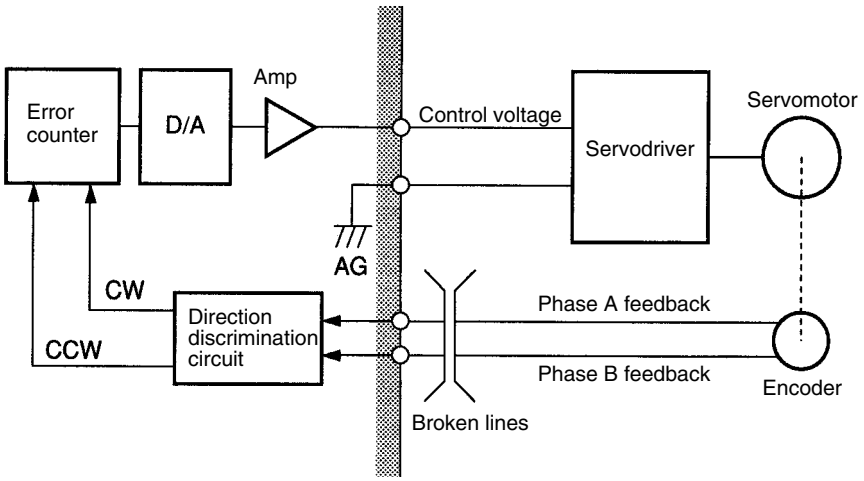

1, 2, 3...

1. Wire breakage while the servomotor is rotating:
   While the servomotor is rotating, the speed control voltage is not 0 V because of the signal from the error counter. If the feedback line is broken, no feedback signals will be given to the error counter and the speed control voltage remains unchanged from the value existed before the line breakage, causing motor runaway.
2. Wire breakage while the motor is stopped:
   If the feedback line is broken while the servomotor is stopped and correct feedback signals cannot be returned, the speed control voltage remains at zero without changing. Therefore, the servomotor also remains stopped. In fact, however, the motor may move in one direction without stopping.

This is caused by a discrepancy between the 0 V of the MC Unit's control voltage and the 0 V of the servodriver's voltage input.

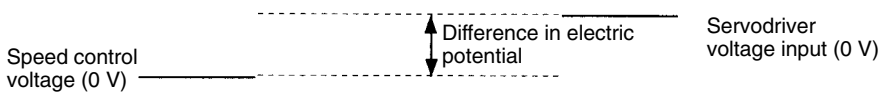

When the two 0 voltages do not match, an electric potential difference is generated, resulting in a false control voltage. This in turn causes the servomotor to move in one direction without stopping.

In order to prevent this, repair the wiring or adjust the 0 V of either the MC Unit or the servodriver so that the 0 V levels match.

3-3 Wiring Check Function

The MC Unit is provided with a wiring check function. This function is designed to check for reverse wiring and disconnected wiring when the power supply switch is turned on in order to prevent motor runaway. Whether or not to a execute wiring check can be determined by setting a system parameter.

This function is designed to output a specified number of pulses in the specified direction and to check whether correct feedback pulses are read.

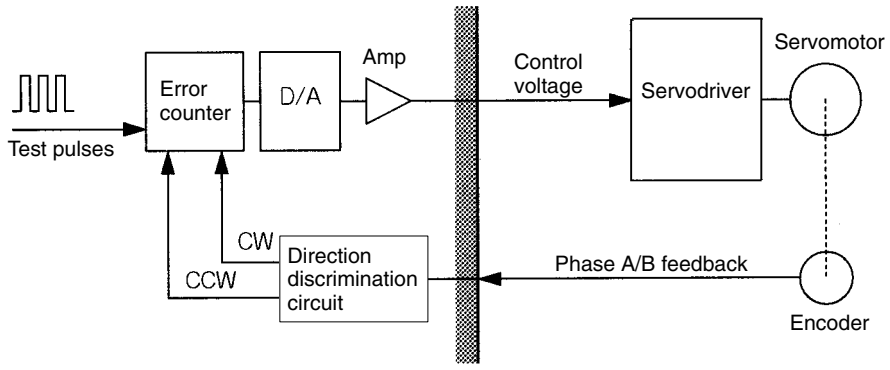

Set a specified number of test pulses in the error counter. After a set period of time (the time required for the system parameter to perform wiring check), check the content of the error counter to determine whether the number of pulses that were initially set and also the direction are correctly returned.

When the test pulses are set in the CW direction, the feedback pulses corresponding to the set number of pulses will be returned in the CW direction. If the direction is reversed, it is treated as a reverse wiring error and the servolock is cleared, dropping the voltage output to 0 V.

To correct this faulty wiring, either turn off the power and repair the reversed wiring or change the machine parameter “encoder polarity” from the MC Support Software from the preset setting to the opposite setting, i.e., change from “forward rotation for encoder increase” to “reverse rotation for encoder increase” or from “reverse rotation for encoder increase” to “forward rotation for encoder increase.”

Note Refer to the *MC Support Software Operation Manual* for further information on whether to execute wiring check or not, for further information on the test pulse setting, and for further information on the time setting before error counter check.

In addition to the descriptions on the previous page, if the feedback pulses returned is less than the number of test pulses, a disconnected wiring error will be generated. Just as with a faulty wiring error, the servolock will be cleared and the voltage output will drop to 0 V.

To correct a disconnected wiring, turn off the power and repair the wiring.

Faulty wiring checks and disconnected wiring checks can be carried out simultaneously. Both checks can be skipped by setting the machine parameter “wiring check” from the MC Support Software to NO. It is initially set to YES.

3-4 Failsafe Circuits

To protect against unforeseen problems that may occur during operation, provide failsafe circuits, as those shown below, in the positioning system in which the MC Unit is used.

Errors during Positioning

As illustrated below, motor runaway may occur during operation without a position loop being formed for these reasons:

- Failure of internal components in the MC Unit
- Disconnected external wiring or faulty connections

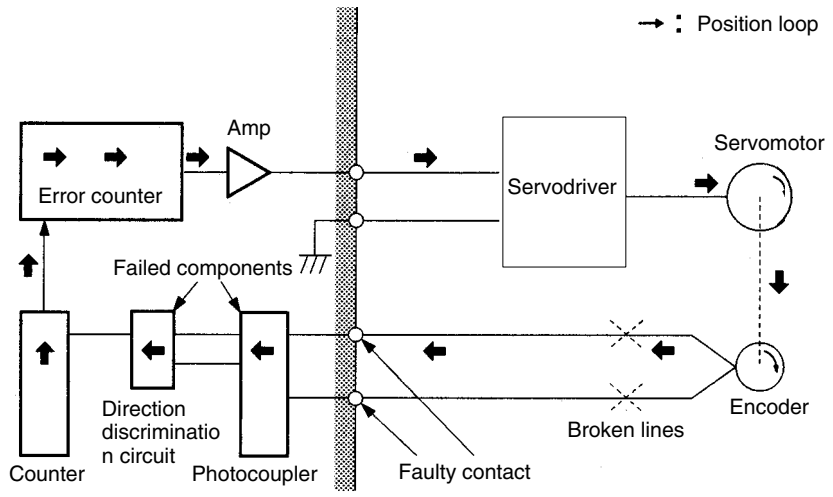

Error Counter Overflow Check

The MC Unit checks for errors during positioning according to the count in the error counter and executes the following processes if motor runaway occurs as described above:

a) Outputs an “Error counter overflow” error

b) Sets the Error Counter Alarm Bit in the interface bits to ON according to the parameter settings.

Error Counter Capacity Setting

The error counter capacity can be set according to the operation conditions by means of a parameter. This parameter can be used to make the error counter overflow detection more sensitive. Follow the procedure outlined below to set the error counter capacity.

1, 2, 3...

1. Conduct a trial operation of the machine, and use the Teaching Box to check how the count changes in the error counter.
2. Check the maximum count value, and set the parameter data so that the error counter capacity is 10% to 20% greater than that value.

Example 1, below, shows an error occurring during positioning. The MC Unit checks the count of the error counter and the Error Counter Alarm Bit of the interface bits is turned ON. The PC processes input data and gives an immediate stop input to the MC Unit by means of an external output.

When an error counter overflow occurs, the immediate stop input is turned ON using an external output, the voltage output to the servodriver is dropped to 0 V and at the same time the operation command output is turned OFF.

Example 1

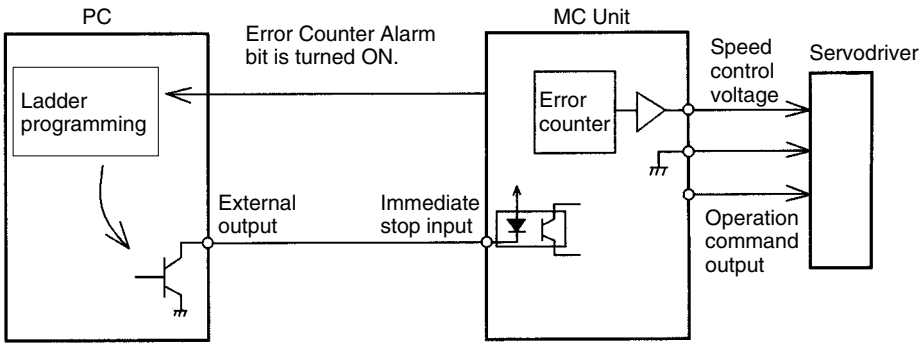

In the Example 2, when the Error Counter Alarm Bit is turned ON, the dynamic brake of the motor is actuated by an external output from the PC to stop the motor.

Example 2

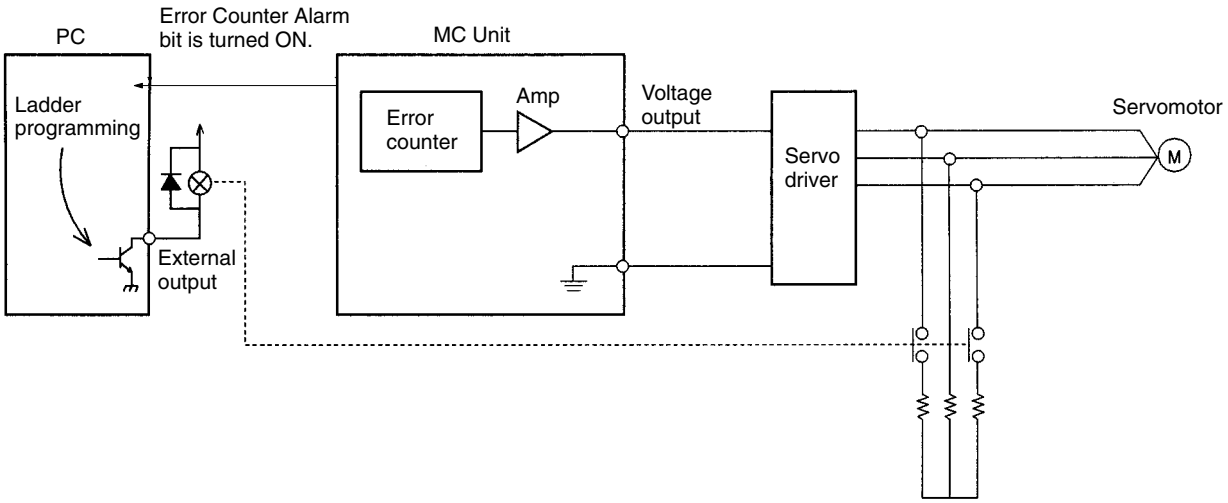

In either of the above examples, the motor makes a sudden stop when the error counter overflows. Make sure that this sudden stop will not result in damage to the system.

External Emergency Stop Circuit

In addition to the failsafe circuits shown above, a failsafe circuit is normally set up using monitoring sensors installed at the edges of the workpiece's range of movement to detect abnormal workpiece movement and stop operation if a runaway occurs.

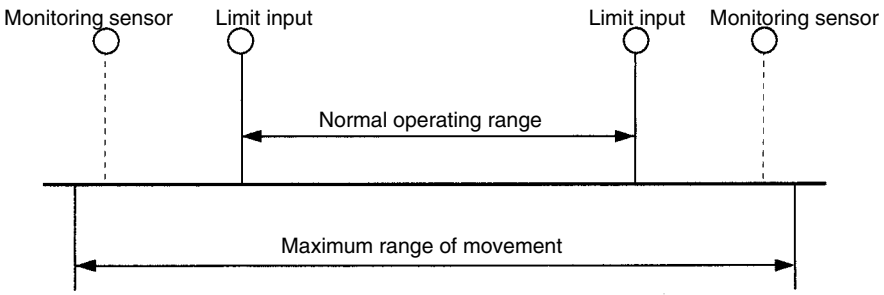

Monitoring sensors are installed outside of the limit inputs. If the workpiece reaches one of the sensors, the power is turned off to the servodriver and then the dynamic brake is applied to stop the motor.

SECTION 4
System Configuration

This section provides information on the system configuration necessary for operating the MC Unit.

4-1 Basic System Configuration 30
4-2 Items Supplied by the User 31
4-3 Peripheral Devices 32

4-1 Basic System Configuration

The following is an example of a system configuration using a SYSMAC C200HX, C200HG, or C200HE PC. The C200H or C200HS PC can be used also.

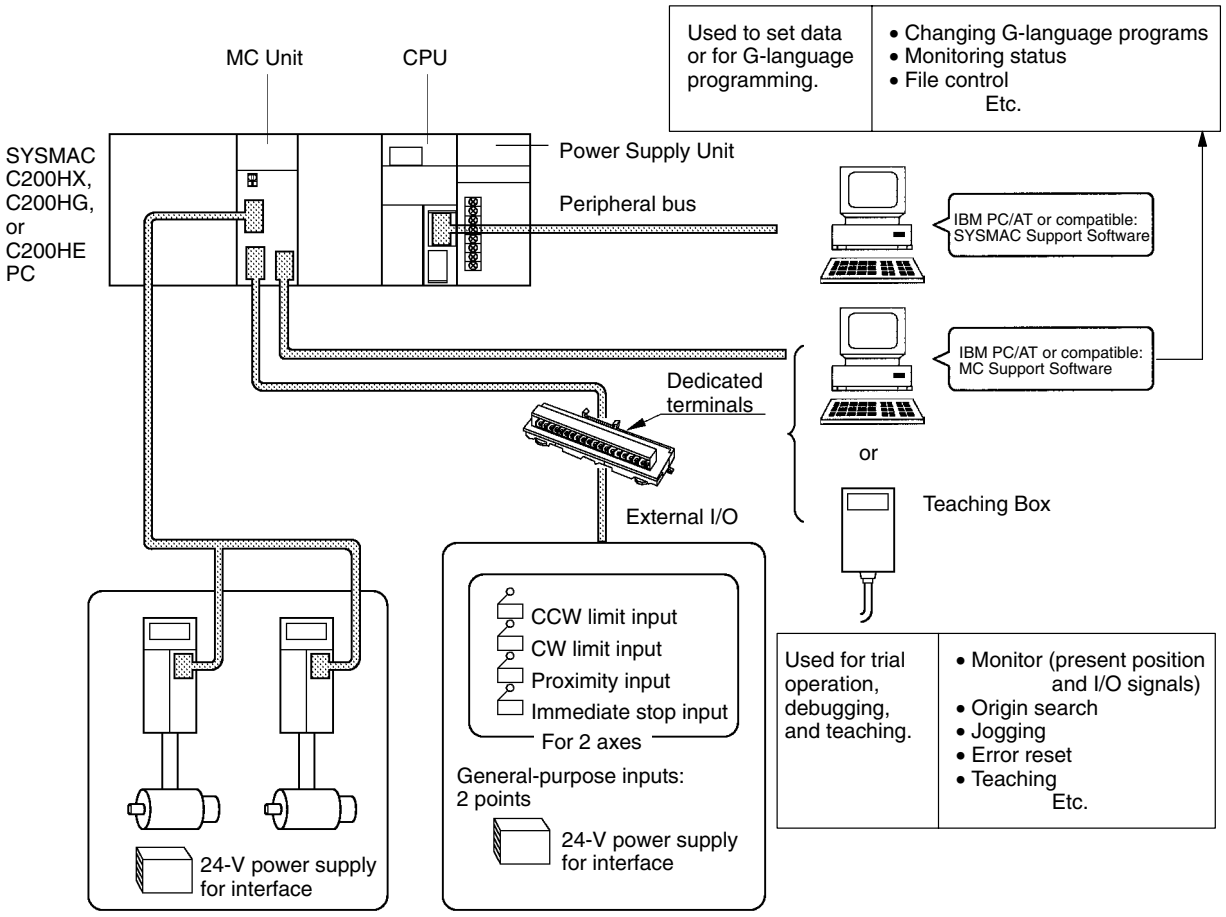

Devices used in the system configuration example are as shown in the following table.

Devices	Model
Motion Control Unit	C200H-MC221
CPU	One of the following: C200HE-CPU□□-E C200HG-CPU□□-E C200HX-CPU□□-E
Power Supply Unit	One of the following: C200HW-PA204 C200HW-PA204S C200HW-PD024
CPU Backplane	C200HW-BC031/BC051/BC081/BC101
Teaching Box	CVM1-PRS71
Personal computer for SYSMAC Support Software	IBM PC/AT or compatible
SYSMAC Support Software	C500-ZL3AT1-E (3.5-inch floppy disk)
Personal computer for MC Support Software	IBM PC/AT or compatible
MC Support Software	CV500-ZN3AT1-E (3.5-inch floppy disk)
Servodriver	Analog voltage control type

4-2 Items Supplied by the User

If using a manual pulse generator (MPG) in your system, prepare the following items.

MPG (Line driver output type: Compatible with RS-422)
Power source for the MPG: 5 V

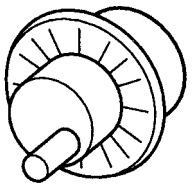

In addition to the above, prepare power sources for the servodriver interface and for external I/O.

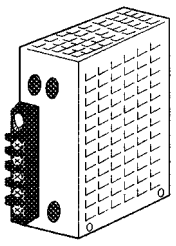

Power source for the servodriver interface: 24 V
Power source for the external I/O: 24 V

Dedicated Driver Connecting Cables

The user must prepare the driver connecting cables. Refer to *8-5 Connecting Servodrivers* and the *MC Unit Operation Manual: Details* for information on driver connecting cables.

Dedicated I/O Cable and Terminals

A dedicated I/O cable and terminals are available to connect input signals, such as CCW, CW, and origin proximity signals, to the MC Unit.

Name	Model	Remarks
MC Unit Cable	XW2Z-100J-F1	Length: 1 m
MC Unit Terminals	XW2B-20J6-6	---

4-3 Peripheral Devices

Shown below is a brief explanation of peripheral devices used to operate the MC Unit.

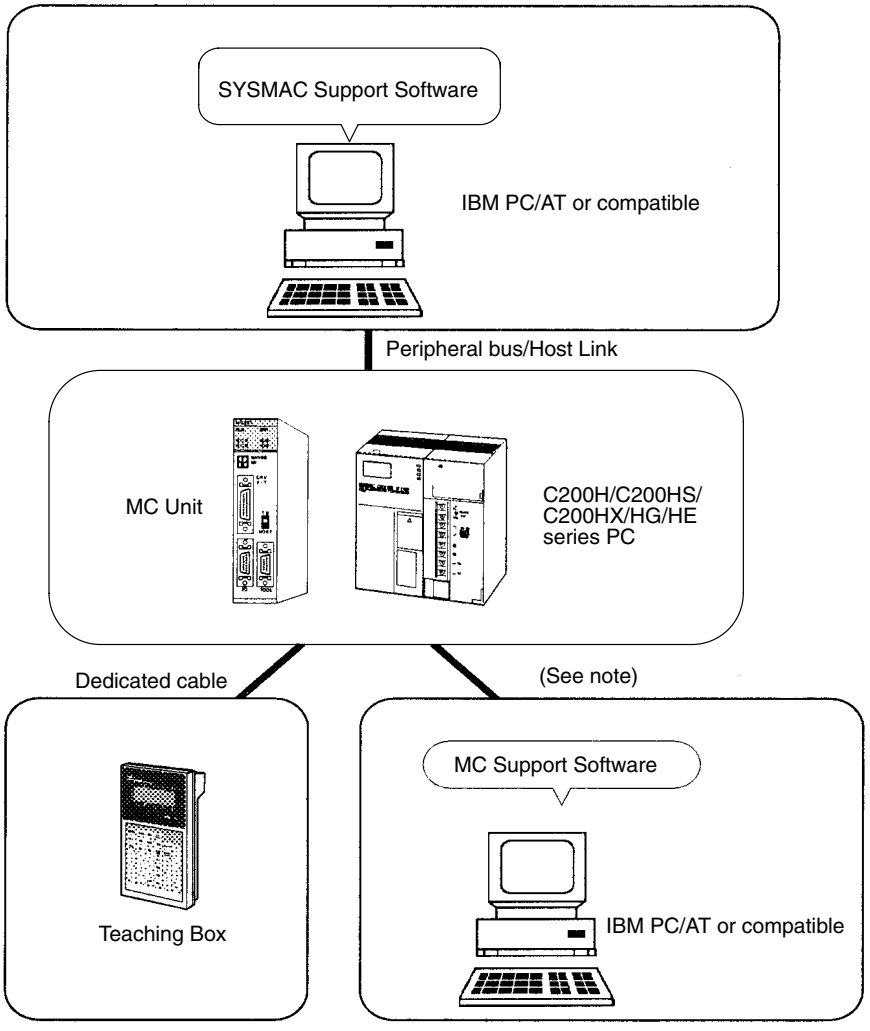

Note This host link is a dedicated communications link between the MC Support Software and the C200H-MC221.

SYSMAC Support Software Used for creating an I/O table and a ladder-diagram program, and for monitoring various data.

MC Support Software Used for creating MC Unit control programs in G language or for setting parameters.

Teaching Box Used for jogging operations, origin searches, executing control programs previously transferred to the MC Unit, displaying present positions, and teaching.

Teaching Box Functions The following table lists the functions of the Teaching Box.

Function		Description
Deceleration stop		Decelerates all axes to a stop.
Error reset	MC Unit error reset	Resets errors that have occurred in the MC Unit.
	Servodriver error reset	Resets alarms for the servodriver.
Monitor	Present position	Monitors the following present position: Present position in the reference coordinate system (using user-set unit such as “mm”). Present position in the reference coordinate system (in pulses). Error counter value.
	Position data	Reads and changes position data stored in the MC Unit.
	Errors	Reads errors that have occurred in the MC Unit.
	I/O signals	Monitors and changes I/O signals connected to the MC Unit.
	Z-phase tolerance	Monitors the number of pulses to the Z phase from the origin input.
	Servo parameter	Reads and changes servo parameters.
Origin search		Searches for the origin.
Program execution	Task/program No. designation	Designates the desired task and program to be executed.
	Cycle run	Executes tasks.
	Single block run	Executes the program block by block.
Jogging		Jogs individual axes. More than one axis can be jogged at the same time.
MPG feeding	Multiplication factor	Designates the multiplication factor for 1 pulse for the MPG.
Override		Increases or decreased the operating speed during memory operation.
Teaching		Registers the present position as position data.
Extension	Mode	Changes the mode used to control the MC Unit.
	Servo-lock/servo-free	Locks or frees the servomotor.
	Memory protect	Protects or clears protection for the memory (position data area, system parameters) in the MC Unit.
	Saving	Stores system parameters, position data, and programs in the flash memory.
Error detection		CPU errors Communications errors

MC Support Software Functions

Function	Specifications
Applicable computer	IBM PC/AT or compatible (CPU 80286/80386/80486)
Operating environment	Memory: Open area of 490K bytes or larger Hard disk: Open area of 1 megabyte or larger Operating system: PC-DOS/MS-DOS
Editing programs	MC program can be created, modified, or deleted.
Editing position data	Position data can be created, modified, or deleted.
Editing parameters	System parameters can be created or modified.
Transferring and comparison	The contents of MC programs, system parameters, and position data are transferred and compared between the MC Unit and the IBM PC/AT or compatible. The MC programs, system parameters, and position data are stored as backups in the flash memory.
Printing	The contents of MC programs, system parameters, and position data can be printed.
Monitoring	Monitoring while the MC program is running. Monitoring the present position Present positions in the reference coordinate system (either in user-set display unit such as mm or in pulses) Present position in the workpiece coordinate system Work origin shift Error counter count FAL status of the MC Unit I/O status of the MC Unit
File control	Displaying a list of files, loading, saving or deleting a file Formatting floppy disks
System settings	Setting the PC model. Setting the communications system (peripheral bus/Host Link)

SECTION 5
Positioning

This section provides information on position control as performed by the MC Unit.

5-1 Positioning Controls 36
5-2 PTP Control 37
5-3 Linear Interpolation 38
5-4 Circular Interpolation 40
5-5 Interrupt Inching 41
5-6 Acceleration and Deceleration Curves 41
5-7 Operation Modes 42
5-8 Override Function 44
5-9 Backlash Compensation 45

5-1 Positioning Controls

The MC Unit offers the following three positioning controls:

PTP control
CP control (linear interpolation and circular interpolation)
Interrupt inching

Control programs are created in the G language.

Note Refer to *Section 6 G Language* for information on the G language.

PTP Control

The PTP control is used to position each axis (X and Y axis) independently from other axes. Positioning time depends on the travel distance and speed of each axis.

Example: Moving from the origin to the X-axis coordinate of 100 and Y-axis coordinate of 50.

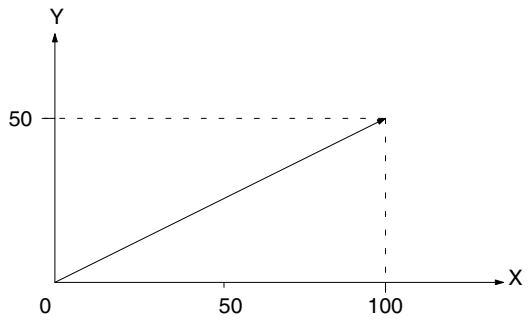

The illustration shows movements when the high-speed feed rate for the X axis is set to the same feed rate as the Y axis.

CP Control

CP control is used to position by designating not only the starting point and the target point but also the path between these two points.

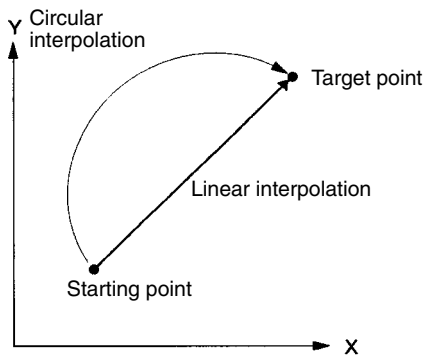

Interrupt Inching

Interrupt inching is used to perform speed control until an external signal is input and to perform positioning control for inching with the external signal.

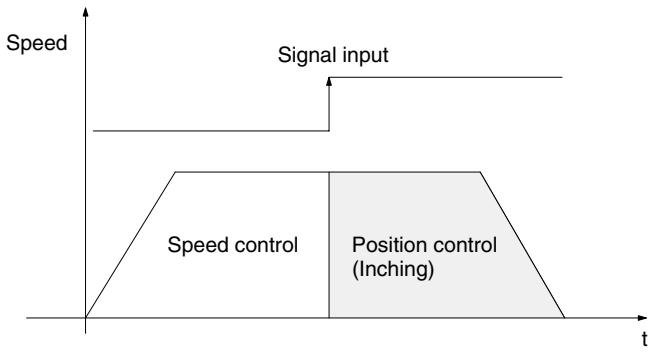

5-2 PTP Control

Positioning each axis independently from the rest of the axes is called PTP control. Each axis moves at the preset seeds: at the acceleration speed for the preset acceleration time, the maximum high-speed feed rate, and the deceleration speed for the preset deceleration time.

For example, suppose a control program is executed to move from the origin to the X-axis coordinate of 100 and Y-axis coordinate of 50. If the speed for the acceleration time is the same as that for the deceleration time, X-axis and Y-axis movements will be as illustrated below.

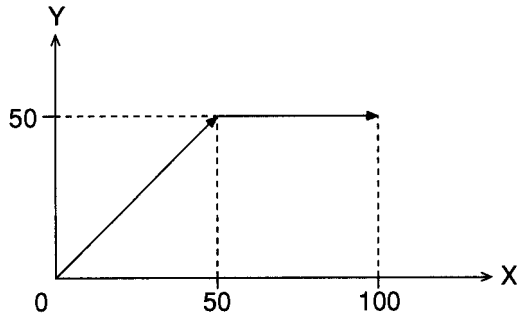

The illustration shows movements when the high-speed feed rate for the X axis is set to the same feed rate as the Y axis.

Both the X axis and Y axis move to a coordinate of 50 over the same duration of time. At this point, the Y axis stops and the X axis moves to a coordinate of 100.

Jogging in the manual mode is also controlled by the PTP control. When jogging is controlled by the PTP control, the speed will be the maximum jogging speed.

Acceleration Time and Deceleration Time

Acceleration and deceleration times under the PTP control are as follows:

Acceleration time: Time required until the single axis speed reaches the maximum high-speed feed rate

Deceleration time: Time required until the speed control voltage drops to zero from the maximum high-speed feed rate of the single axis.

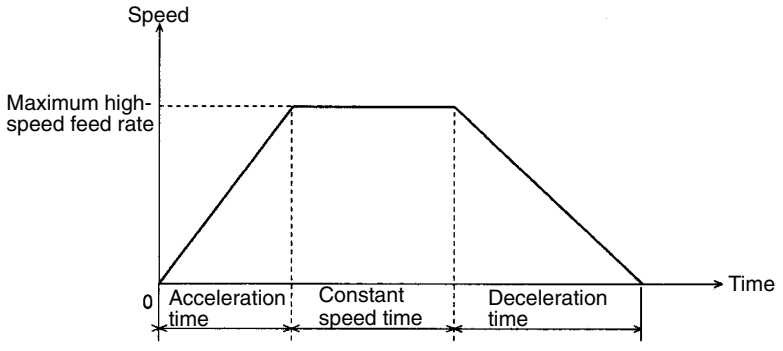

The acceleration time and deceleration time varies depending on the override values. (Acceleration speed is constant.)

Note Refer to *5-8 Override Function* for information on the override.

Triangular Control

If the travel time is shorter than the sum of acceleration time and deceleration time, movements are controlled by the triangular control shown below.

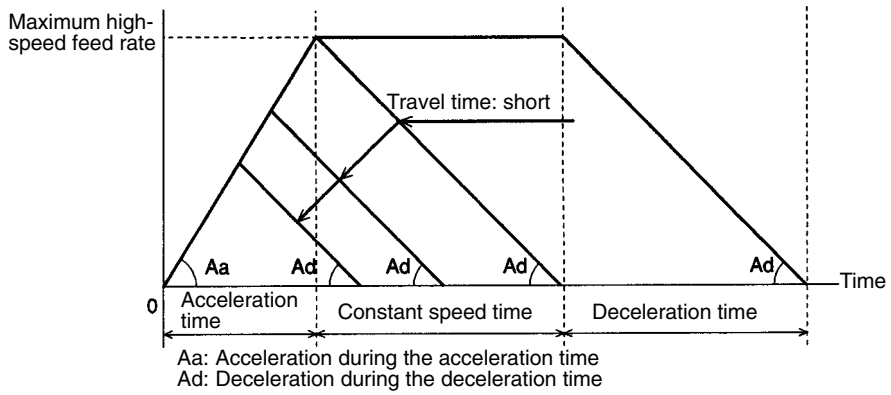

The ratio of acceleration time and deceleration time in the triangular control is the same as the ratio of acceleration time and deceleration time set as a system parameter.

5-3 Linear Interpolation

Positioning for linear interpolation produces a straight line that connects a preset starting point to a preset end point using all axes.

Linear interpolation from the point A to the point B will be as shown below when using the X and Y axes.

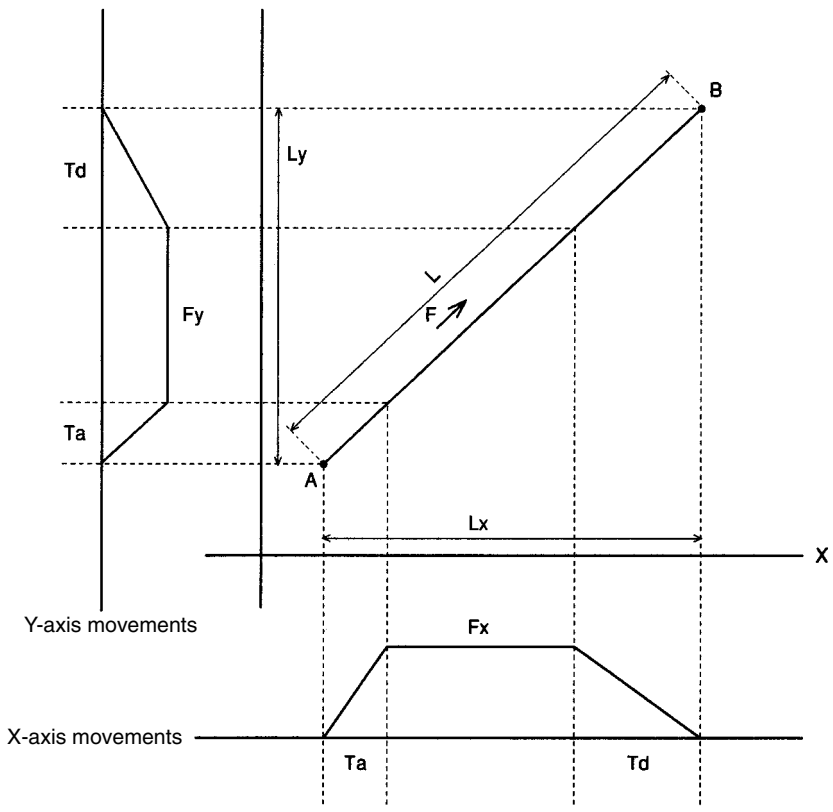

F: Designated interpolation feed rate
Fx: Interpolation feed rate of the X axis based on F
Fy: Interpolation feed rate of the Y axis based on F
Ta: Interpolation acceleration time
Td: Interpolation deceleration time

Fx and Fy can be expressed as follows:
Fx= Lx/L x F
Fy= Ly/L x F
Where, L is the travel distance in the specified locus, Lx is the travel distance along the X axis, and Ly is the travel distance along the Y axis.

Interpolation Acceleration and Deceleration Times

Interpolation acceleration and deceleration times for linear interpolation are defined as follows:

Interpolation acceleration time: Time required to reach the specified interpolation feed rate on the composite axial locus.

Interpolation deceleration time: Time required until the speed control voltage drops to zero from the specified interpolation feed rate on the composite axial locus.

Unlike those in the PTP control, linear interpolation acceleration and deceleration times are not affected by the speed. Acceleration changes according to the movement to satisfy the preset interpolation acceleration and deceleration times.

Triangular Control

When the mode is set to the stop mode and if the travel time is shorter than the sum of the interpolation acceleration time and the deceleration time, movements are subject to the triangular control as in the PTP control.

When the mode is set to the pass mode, the travel time won't become shorter than the preset interpolation acceleration and deceleration times, but the speed will become slower than the designated speed.

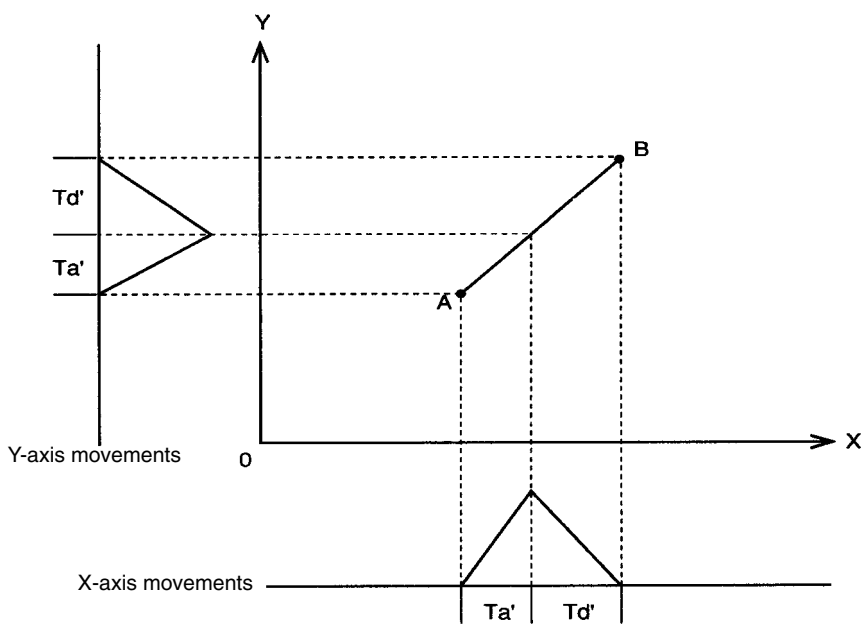

The ratio between the interpolation acceleration time and the deceleration time in the triangular control is equal to the ratio between the preset interpolation acceleration time (Ta) and the deceleration time (Td). Td'/Ta'=Td/Ta

5-4 Circular Interpolation

Positioning for circular interpolation is performed using two axis from a starting point to an ending point and traveling through a circular arc.

Basic Idea

Circular interpolation is achieved by repeating successive linear interpolation along straight lines drawn by dividing a circular arc (in the shape of a polygon). An actual locus of circular interpolation is as shown below. The radius of the locus of actual movements is smaller than the radius of the arc due to accumulated pulses.

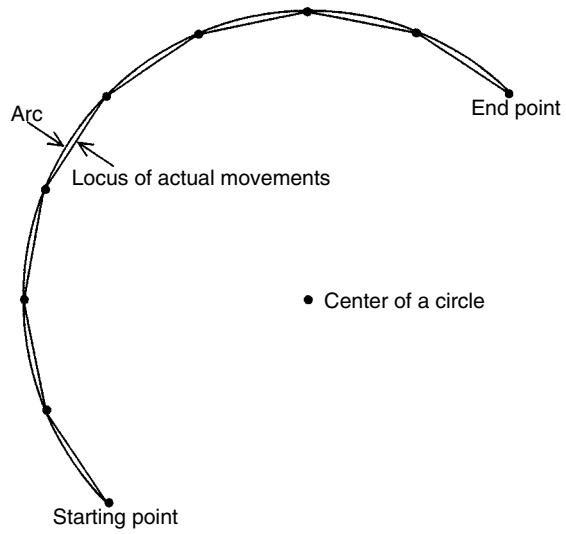

The interpolation acceleration time, the interpolation deceleration time, and triangular control are the same as for the linear interpolation.

Note Refer to *5-3 Linear Interpolation* for information on the interpolation acceleration time, interpolation deceleration time, and triangular control.

If positioning for circular interpolation is performed at high speed, the radius of the locus of actual movements will be reduced.

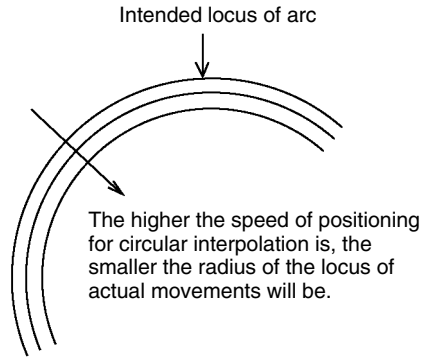

5-5 Interrupt Inching

Interrupt inching is used to perform speed control until an external signal is input and to perform positioning control for inching with the external signal.

Interrupt inching can be performed either at constant speed or two speeds.

Constant Speed

In the following example, the X axis is moved 100 mm at 200 mm/s.

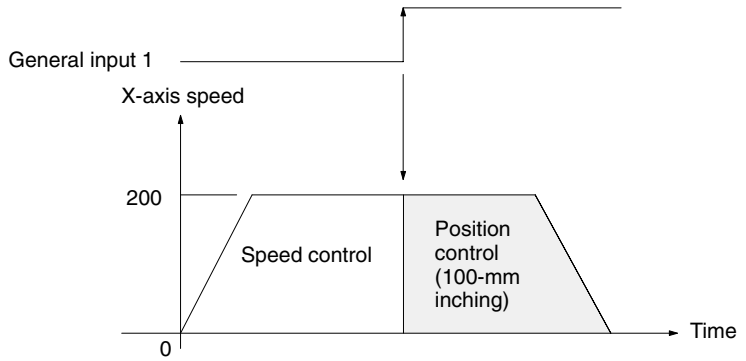

Two Speeds

In the following example, the X axis is moved 100 mm while the speed of the X axis is decelerated to 100 mm/s from 200 mm/s.

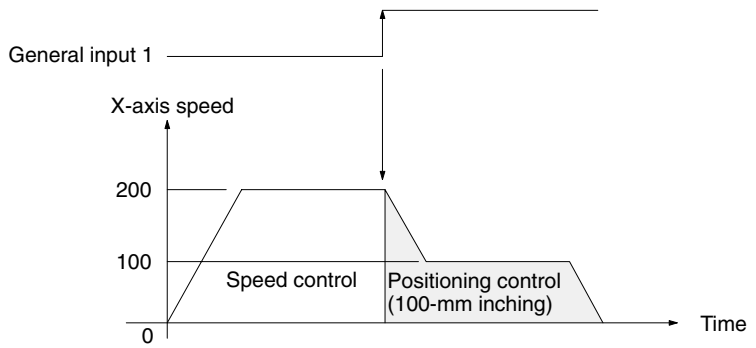

Note

1. Interrupt inching can move a single axis only.
2. An external signal for interrupt inching is input to general inputs 1 and 2 of the MC Unit.

General input 1	X-axis interrupt inching
General input 2	Y-axis interrupt inching

5-6 Acceleration and Deceleration Curves

In positioning actions, operating speed is accelerated gradually at the beginning and decelerated gradually toward the end to achieve smooth movement. For the MC Unit, either a trapezoidal curve or an S curve can be used as the acceleration/deceleration curve for the starting/stopping operations for each axis.

The acceleration time and deceleration time can be set separately.

Note Refer to the *MC Support Software Operation Manual* to set the acceleration/deceleration curve and acceleration/deceleration times.

Trapezoidal Curve

With the trapezoidal curve, acceleration is constant during the acceleration time and deceleration time.

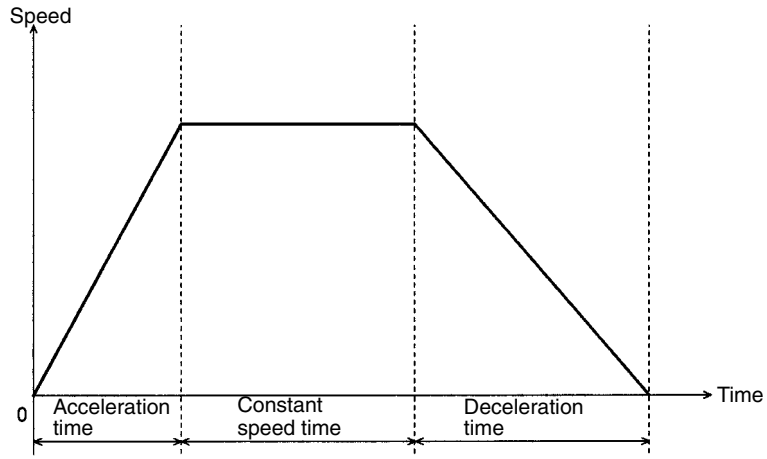

S Curve

With the S curve, acceleration during the acceleration time and deceleration time changes with time.

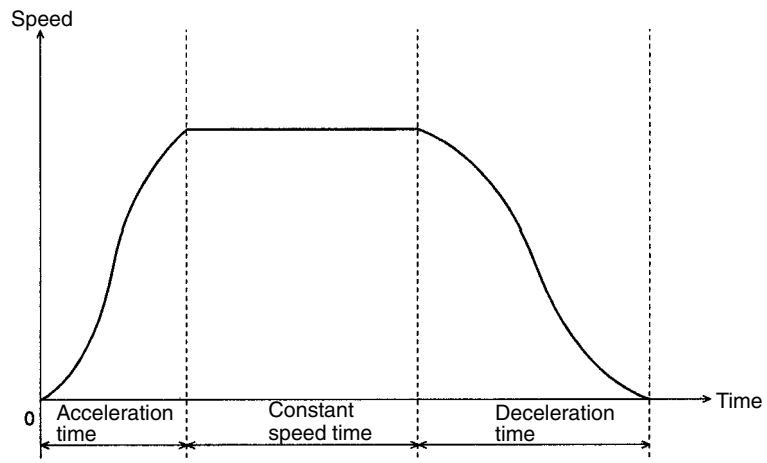

Note If the acceleration time or the deceleration time is the same, the maximum acceleration in the S curve is 1.5 times that in the trapezoidal curve. Therefore, when using a program set for a trapezoidal curve for an S curve, the acceleration and deceleration times set for the trapezoidal curve must be multiplied by 1.5. The maximum acceleration in the S curve will then fall within the acceleration set for the trapezoidal curve, allowing the motor to be driven smoothly.

5-7 Operation Modes

Two modes, a stop mode and a pass mode, are available for determining movements from one operation to another when executing continuous positioning. This mode is designated in the control program created in the G language.

Note Refer to the *MC Unit Operation Manual: Details* to designate the operation mode in the G language.

Stop Mode

If the stop mode is specified for continuous positioning operations, one operation is followed by the subsequent operation after completely finishing the first positioning operation.

The following illustration shows changes in the time, speed, and pulses when the axis is controlled as shown below.

Example:

```
N010 G00 X100
N011 G00 X200
```

Moves X axis to 100-mm point by PTP control
Moves X axis to 200-mm point by PTP control

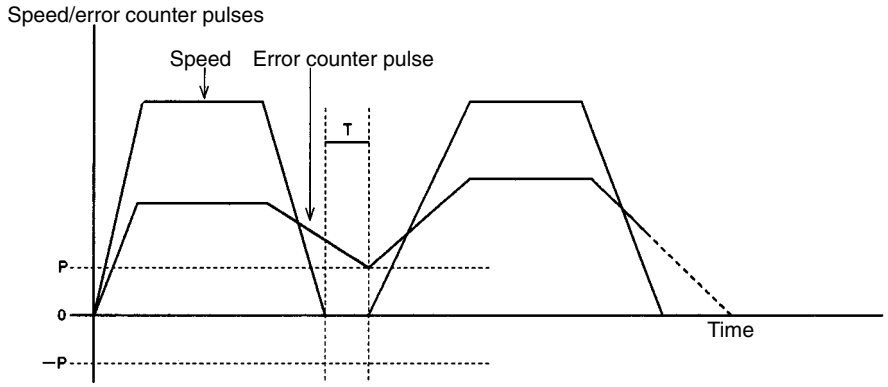

P: In-position width
T: Time required for determining whether positioning is completed or not

Positioning is completed when the error counter pulse falls within the in-position zone.

Pass Mode

If the pass mode is specified for continuous positioning operations, one operation is followed by the subsequent operation without any pause in motion, i.e., without stopping to determine whether positioning is completed or not. When the power is turned on, this mode is automatically selected.

The following illustrations show changes in the speed in the stop mode and the pass mode when the continuous operation commands are given as shown below.

Example:

```
N010 G01 X100 F10
```

Moves X axis to 100-mm point at 10 mm/s via linear interpolation

```
N011 G01 X300 F20
```

Moves X axis to 300-mm point at 20 mm/s via linear interpolation

⋮

Stop Mode

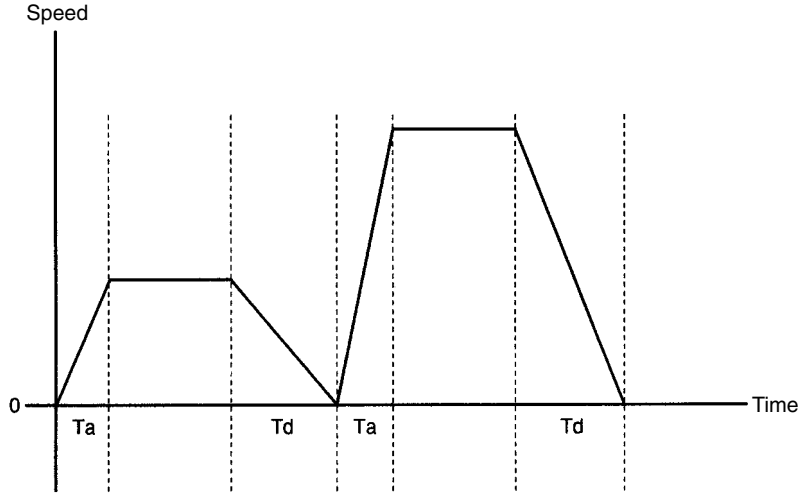

Pass Mode

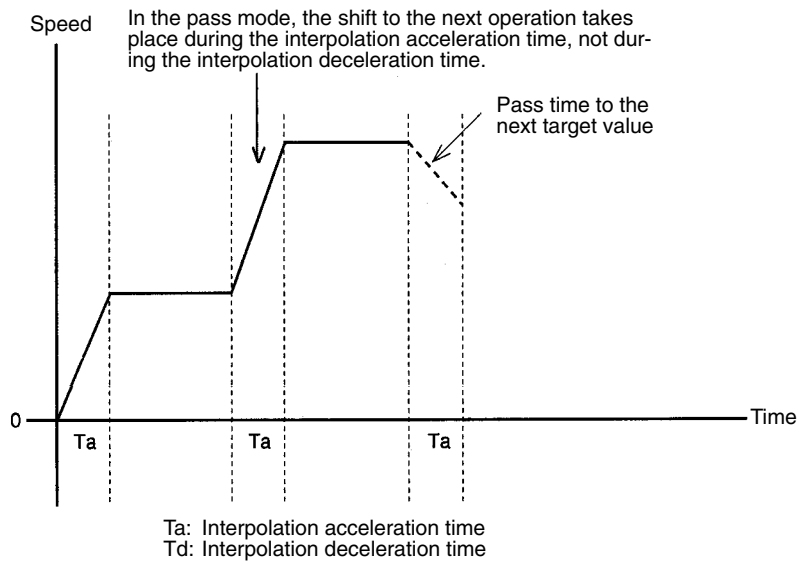

When the pass mode is selected, the time required for movements is reduced because no interpolation deceleration time is required.

5-8 Override Function

The override function is designed to change the operation speed through multiplying the speed that is set in the system parameters or G commands by a desired factor. Setting methods are different depending on whether the PTP control is used or interpolation is used.

Override in PTP Control

The override in the PTP control can be set to a value between 0.1% and 100.0%. “100%” means the maximum high-speed feed rate designated by the feed rate parameter. The override function is used when the maximum high-speed feed rate is too fast. For example, if the override is set to 50%, the travel speed drops to half the maximum high-speed feed rate.

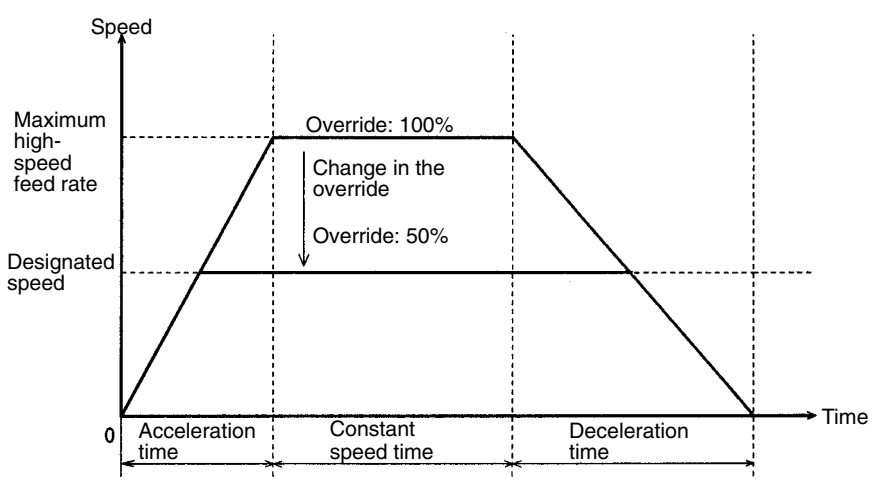

The acceleration remains constant even if the speed is changed by using the override function. As a result, both the acceleration time and the deceleration time are proportionally reduced.

Override in CP Control

In interpolation control, the designated interpolation feed rate is used as the maximum feed rate. The override for the interpolation feed rate can be set to a value between 0.1% and 199.9%. If the result set by using the override function to over 100% exceeds the maximum interpolation speed, maximum interpolation feed rate is used instead. Unlike the PTP control, the acceleration and deceleration times remain constant regardless of the override set value and, as a result, the acceleration and deceleration rates vary.

5-9 Backlash Compensation

A backlash is a sudden backward movement of a driving axis that may be caused due to mechanical looseness as shown in the following illustration.

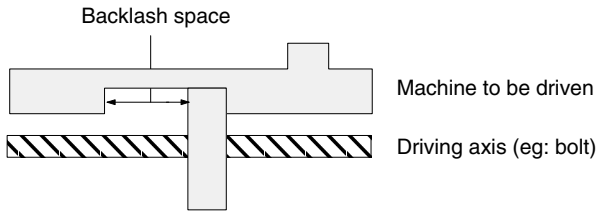

The positioning of a machine cannot be performed precisely if there is a backlash.

As shown in the following illustration, the position of a machine moved 100 mm in the forward direction is different from that of the same machine moved 100 mm in the reverse direction if there is a backlash even though there is no difference in position between the driving axes.

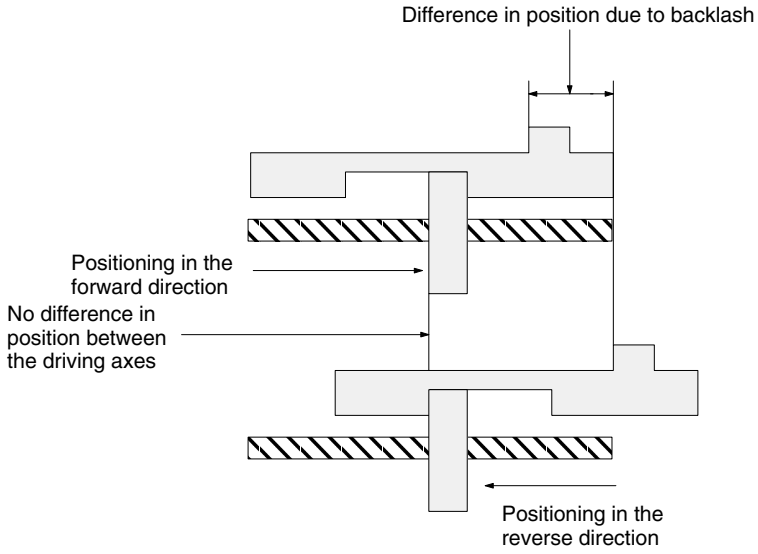

Backlash compensation is a function to register the backlash space within a range of 0 to 999 pulses to minimize the positioning errors of machines moving in the forward or reverse direction to the same position as shown in the following.

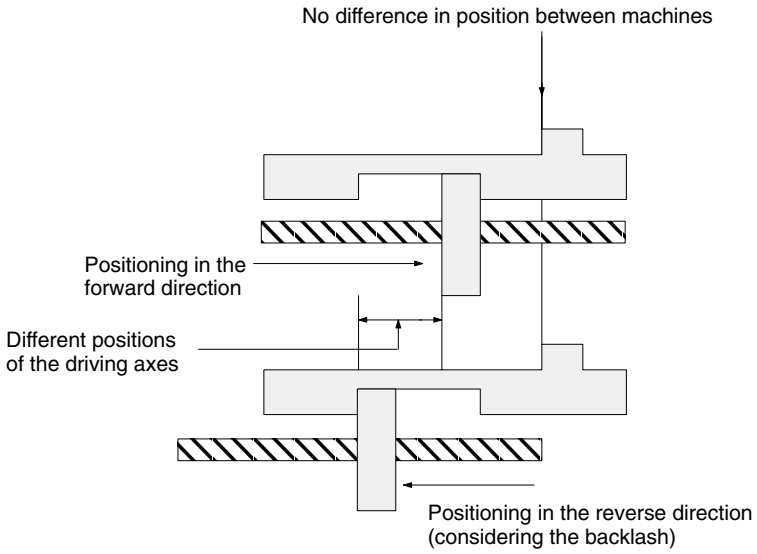

SECTION 6
G Language

This section introduces the “G” language used for position control with the MC Unit.

6-1 Introduction 48
6-1-1 Example Program 48
6-1-2 G-language Codes 50
6-2 G-language Symbols 51
6-2-1 Specifying Position Data Addresses (A0000 to A1999) 51
6-2-2 Specifying Registers (E00 to E31) 51

6-1 Introduction

The G language is used widely in position control and its main feature is that it is very easy to write for programming. Program functions can be entered simply by entering a “G” and a 2-digit numerical code, then adding any needed parameters. G-language codes G00 through G91 are used in the MC Units. For example, the function “PTP control positioning” is assigned to G00.

Note Refer to *6-1-2 G-language Codes* for a table showing the functions assigned to the G-language codes.

6-1-1 Example Program

The following diagram shows the format of a basic G-language program.

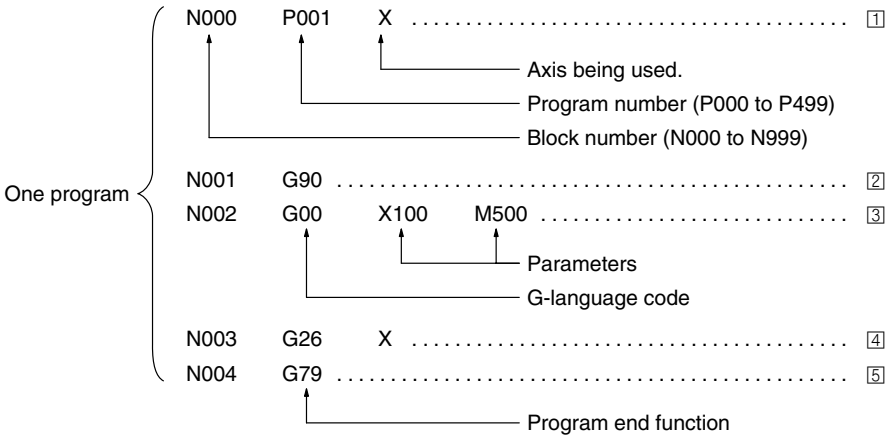

Block Numbers

Programs are composed of blocks, which are distinguished by block numbers N000 through N999. Block numbers are equivalent to the program’s line numbers.

Always declare the program number and axis in block number N000 (1).

Program Numbers

Program numbers range from P000 through P499. The program shown above begins with block number N000 (1) and ends with the block (N004) that contains the program end function, G79.

Sub-programs have program numbers ranging from P500 through P999, and end with a sub-program end function, G73.

The block numbers and program numbers are the total of the blocks and programs being used. A maximum of 100 programs or 800 blocks can be used in the MC Unit.

G-language Codes

Code G00 in line 3 is a G-language code representing the PTP control positioning function.

Parameters

Positions are input as parameters. In this example “X100” has been input to indicate 100 on the X-axis.

The next parameter, “M500,” outputs M-code 500 when the positioning to X100 has been completed. Refer to MC *Unit Operation Manual: Details* for details on M codes.

Some functions, such as G90 in line 2, don’t require parameters. The absolute specification function (G90) indicates that coordinates are to be treated as absolute coordinates.

Format

The following table explains the contents of the MC program.

Line	MC program blocks	Function
1	N000 P001 X	Declares program number (001) and the axis being used (X).
2	N001 G90	Specifies positioning by absolute coordinates.
3	N002 G00 X100 M500	Moves to X-axis coordinate 100. Outputs M-code 500 when positioning is completed. Executed the next block with the M Code Reset instruction from the PC.
4	N003 G26 X	Returns to the reference origin.
5	N004 G79	Ends the MC program.

The following diagram shows the operation of the example program.

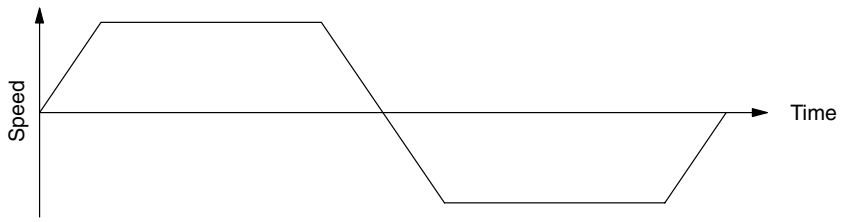

6-1-2 G-language Codes

The following table provides summary and brief description of the G-language functions. Refer to the *MC Unit Operation Manual: Details* for details on these functions.

Code	Name	Function
G00	POSITIONING	Positions up to 4 axes simultaneously with PTP control at the maximum speed.
G01	LINEAR INTERPOLATION	Performs linear interpolation on up to 4 axes simultaneously at the specified interpolation feed speed.
G02	CIRCULAR INTERPOLATION (CLOCKWISE)	Performs 2-axis circular interpolation in the clockwise direction at the specified interpolation feed speed.
G03	CIRCULAR INTERPOLATION (COUNTERCLOCKWISE)	Performs 2-axis circular interpolation in the counterclockwise direction at the specified interpolation feed speed.
G04	DWELL TIMER	Waits for the specified length of time.
G10	PASS MODE	Performs operations one-by-one in sequence without deceleration to stop.
G11	STOP MODE	Performs the next operation after completing positioning.
G17	CIRCULAR PLANE SPECIFICATION (X-Y)	Sets the X-Y plane as the plane for circular interpolation.
G26	REFERENCE ORIGIN RETURN	Moves to the reference origin.
G27	WORKPIECE ORIGIN RETURN	Moves to the workpiece origin.
G28	ORIGIN SEARCH	Performs an origin search on the specified axis.
G29	ORIGIN UNDEFINED	Sets the origin to an undefined state.
G30	SPEED CONTROL	Feeds up to 2 axes simultaneously at the controlled speed.
G31	INTERRUPT INCHING	Performs an interrupt inching operations.
G50	SELECT REFERENCE COORDINATE SYSTEM	Specifies the reference coordinate system.
G51	SELECT WORKPIECE COORDINATE SYSTEM	Specifies the workpiece coordinate system.
G53	CHANGE WORKPIECE ORIGIN OFFSET	Changes the origin of the workpiece coordinate system.
G54	CHANGE REFERENCE COORDINATE SYSTEM PV	Changes the present value in the reference coordinate system.
G60	ARITHMETIC OPERATIONS	Performs arithmetic operations on numerical values, position data, and registers.
G63	SUBSTITUTION	Substitutes numerical values, position data, or registers into other position data or registers.
G69	CHANGE PARAMETER	Changes the specified parameter.
G70	UNCONDITIONAL JUMP	Unconditionally jumps to the specified block.
G71	CONDITIONAL JUMP	Jumps to the specified block when the condition is met.
G72	SUBPROGRAM JUMP	Calls the specified subprogram.
G73	SUBPROGRAM END	Ends the subprogram.
G74	OPTIONAL END	Ends the block currently being executed when the specified optional input is ON.
G75	OPTIONAL SKIP	Skips the block after this function when the specified optional input is ON.
G76	OPTIONAL PROGRAM STOP	Pauses the program when the specified optional input is ON.
G79	PROGRAM END	Ends the main program.
G90	ABSOLUTE SPECIFICATION	Positions with absolute coordinates when performing axis operations.
G91	INCREMENTAL SPECIFICATION	Positions with relative coordinates when performing axis operations.

6-2 G-language Symbols

The following table lists the symbols used to define parameters in G-language programming.

Symbol	Meaning
A	Indicates a position data address. There are 2000 addresses ranging from A0000 to A1999.
E	Indicates an indirect register. There are 32 indirect registers ranging from E00 to E31.
F	Indicates the speed when performing interpolation operations.
G	G function
I	Circle center coordinate for the X-axis.
J	Circle center coordinate for the Y-axis.
L	Loop block
M	M code
N	Block number
P	Program number
R	Circle radius
X	X-axis
Y	Y-axis
/	Punctuation mark
( )	Indirect specification
#	Optional number, parameter type
*	Comment

6-2-1 Specifying Position Data Addresses (A0000 to A1999)

It is possible to use the contents of a position data address for position data or an M code by specifying that address in a parameter in an axis operation command or M code. For example, when the following program is executed, the contents of A1000 (123.45) will be used for the X-axis data and the contents of A1001 (50) will be used for the M code.

6-2-2 Specifying Registers (E00 to E31)

Position data can be specified indirectly by specifying a register (E00 to E31) in an axis operation command or M code. The relationship between the register and position data contents is shown below.

Register		Position data	
Address	Contents	Address	Contents
E00	1000	A1000	123.45
E01	1001	A1001	50

For example, when the following program is executed, the contents of A1000 (123.45) will be used for the X-axis data and the contents of A1001 (50) will be used for the M code.

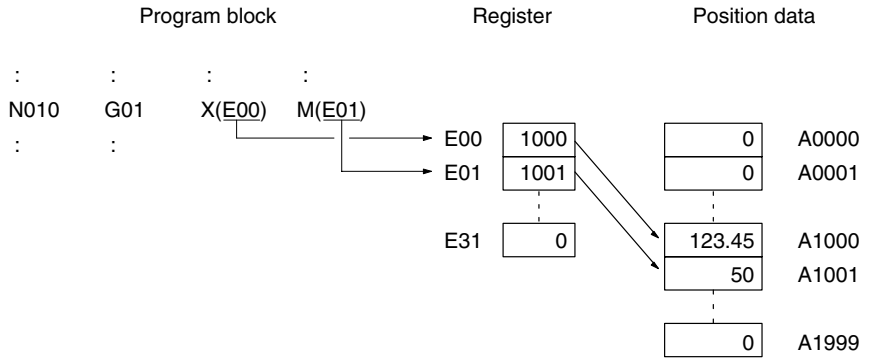

Registers and position data aren't allocated to tasks; they can be used as desired in different tasks.

The contents of registers are all cleared to zero only when power is turned on. Initialize register contents at the beginning of the program by executing an function such as the SUBSTITUTION function (G63).

Registers can contain values from 0 through 1999. An error will occur if a value greater than 1999 is input in a register.

The possible range of values for position data is –39,999,999 through 39,999,999.

SECTION 7
Preparations for Operation

This section provides information on startup procedures, system configuration, and positioning operations using testing equipment, as well as explanations on the interface area necessary for creating ladder-diagram programs.

7-1 System Startup Procedures 54
7-2 Testing Equipment Configuration 55
7-3 Items to Be Prepared 55
7-4 Positioning Operations 56
7-5 Interface Area 58

7-1 System Startup Procedures

This section describes positioning control procedures using the testing equipment. Refer to the sections shown in parentheses for each step. Descriptions on mechanical design are omitted here.

Startup Procedures

1, 2, 3...

1. **Preparation of Devices**
   Prepare devices to be used for operation. (7-2 and 7-3)
2. **Installation of Units**
   Install the CPU, Power Supply Unit, MC Unit, and Input Units. (8-1)
3. **Connection and Wiring**
   Connect the peripheral devices or the Teaching Box, and conduct wiring for the external input, servomotor, servodriver, and Input Unit. (8-2 though 8-6)
4. **Startup of the PC**
   Set the program type and PC model and create an I/O table. (8-7)
5. **Setting, Storing, Transferring, and Backing Up Parameters**
   Set required parameters using the MC Support Software. Stores parameters in the data disk, transfers the parameters to the MC Unit, and stores the parameters as back-ups in the flash memory. (8-8 through 8-11)
6. **Creating, Storing, Transferring, and Backing Up an MC Program**
   Create a program in the G language for test operations using the MC Support Software. Stores MC programs in the data disk, transfers the MC programs to the MC Unit, and stores the MC programs as back-ups in the flash memory. (8-12 though 8-15)
7. **Creating, Storing, and Transferring a Ladder-diagram Program**
   Create a ladder-diagram program for executing the MC program. After storing the program in a data disk, transfer it to the PC. (8-16)
8. **Operation Verification**
   Execute the MC program to verify the test operation. (8-17 and 8-18)

7-2 Testing Equipment Configuration

The equipment used for testing operations consists of the following devices.

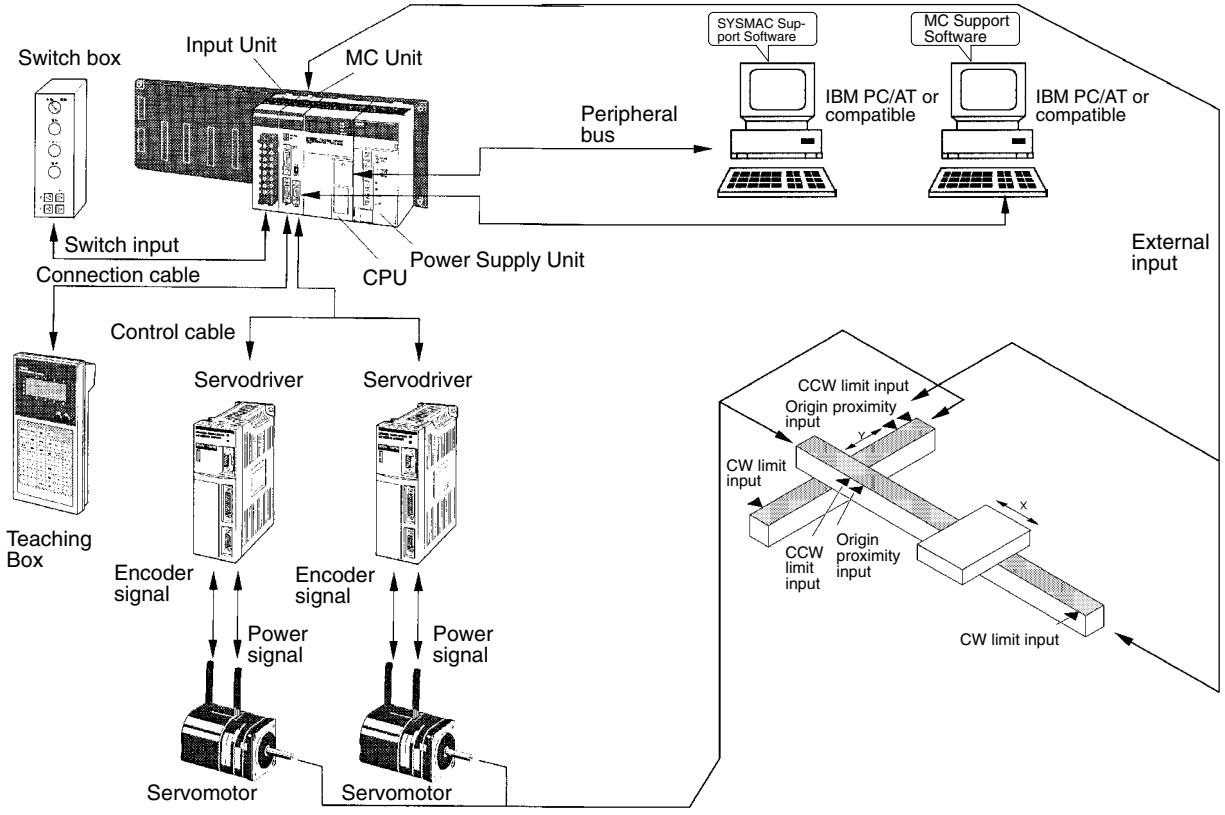

7-3 Items to Be Prepared

Prepare the following items. If more than one models is listed, select one of them. The shaded model is the one used in this manual. All the models without manufactures' names are OMRON products.

Controllers

Name	Model
SYSMAC C200H-series PC CPU	C200HE-CPU11-E C200HG-CPU43-E C200HX-CPU64-E C200HS-CPU01-E C200H-CPU21-E
Motion Control Unit	C200H-MC221
Input Unit	C200H-ID212
Power Supply Unit	C200HW-PA204 C200HW-PA204S C200HW-PD024
Power supply	DC power source (+24 V)
CPU Backplane	C200HW-BC101 (10 slots) C200HW-BC081 (8 slots) C200HW-BC051 (5 slots) C200HW-BC031 (3 slots)
Teaching Box	CVM1-PRS71

SYSMAC Support Software

Name	Model
Personal computer for SYSMAC Support Software	IBM PC/AT or compatible
SYSMAC Support Software	C500-ZL3AT1-E (3.5-inch floppy disk)

MC Support Software

Name	Model
Personal computer for MC Support Software	IBM PC/AT or compatible
MC Support Software	CV500-ZN3AT1-E (3.5-inch floppy disk)

Servomotor Controller

Name	Model
Servodriver Servomotor Power cable Encoder cable Control cable	Prepare the ones that fit the system.

Dedicated I/O Cable and Terminals

Name	Model
MC Unit Cable	XW2Z-100J-F1
MC Unit Terminals	XW2B-20J6-6

Other Items

Nonfuse breaker
Magnet relay
Noise filter
Surge killer
Surge absorber
Switch box
Switch
Cables and wires

Note Refer to the operation manual for the servodriver to be used and prepare required items.

7-4 Positioning Operations

Positioning operations are explained below using a 2-axis mechanical system.

Mechanical System

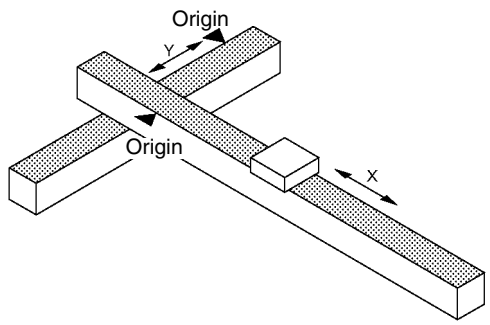

Note An incremental encoder is used for each axis. X-axis and Y-axis control are performed for table positioning.

Switch Box Specifications

The switch box used in the testing equipment is illustrated below. A switch box and switches should be prepared by the users.

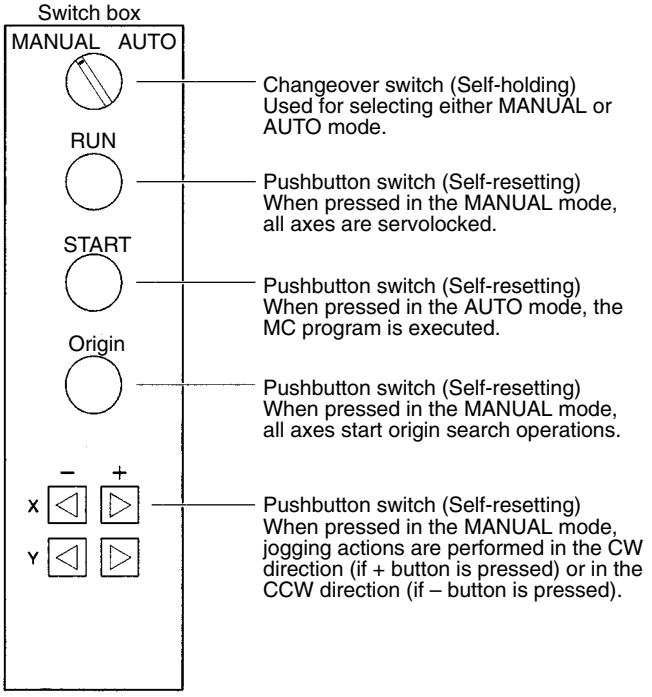

Automatic Operation

Select the AUTO mode using the changeover switch on the switch box and press the START button to execute the MC program. The MC program is used to perform positioning with a 2-axis (X/Y) robot. Drilling operations are performed according to the following steps:

1, 2, 3...

1. Each axis waits at its reference origin.
2. X and Y axes are started to move the drill to a position where the first hole is to be drilled.
3. The robot moves to the next position.
4. The robot moves to the last position.
5. The robot returns to the reference origin.

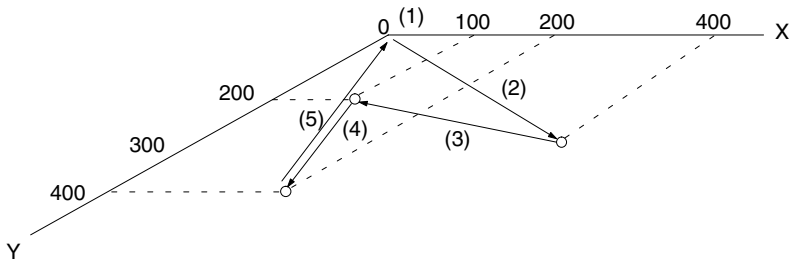

Manual Operation

Select the MANUAL mode using the changeover switch on the switch box and then press the RUN switch, ORIGIN SEARCH switch, and or JOG switch. The following operations are performed.

RUN Switch

If any other manual command is not being executed and if axes are not servolocked, X and Y axes are servolocked.

ORIGIN SEARCH Switch

If any other manual command is not being executed and if the origin has not been defined yet, X and Y axes start origin searches.

JOG Switch

If any other manual command is not being executed and if the axes are servo-locked, X and Y axes start jogging. The motors remains ON while the switch is pressed.

7-5 Interface Area

This section provides a brief explanation of the interface area necessary for creating a ladder-diagram program that executes the MC program.

Definition of Interface Area

The interface area is an area where commands from the PC, status of the MC Unit, and task data are transferred between the PC and the MC Unit.

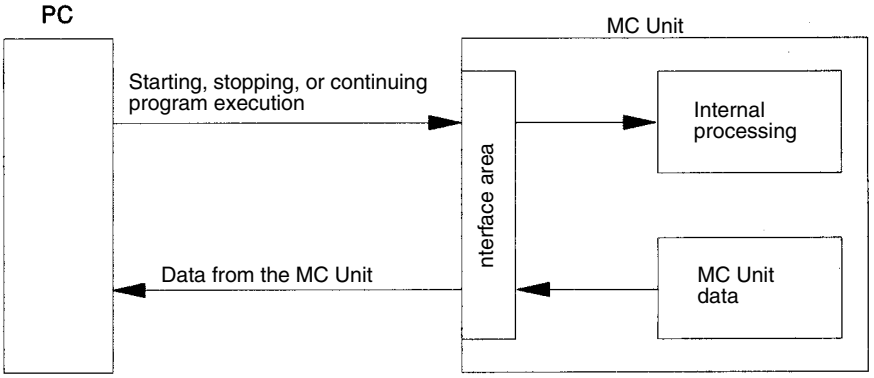

PC Interface (C200H/C200HS)

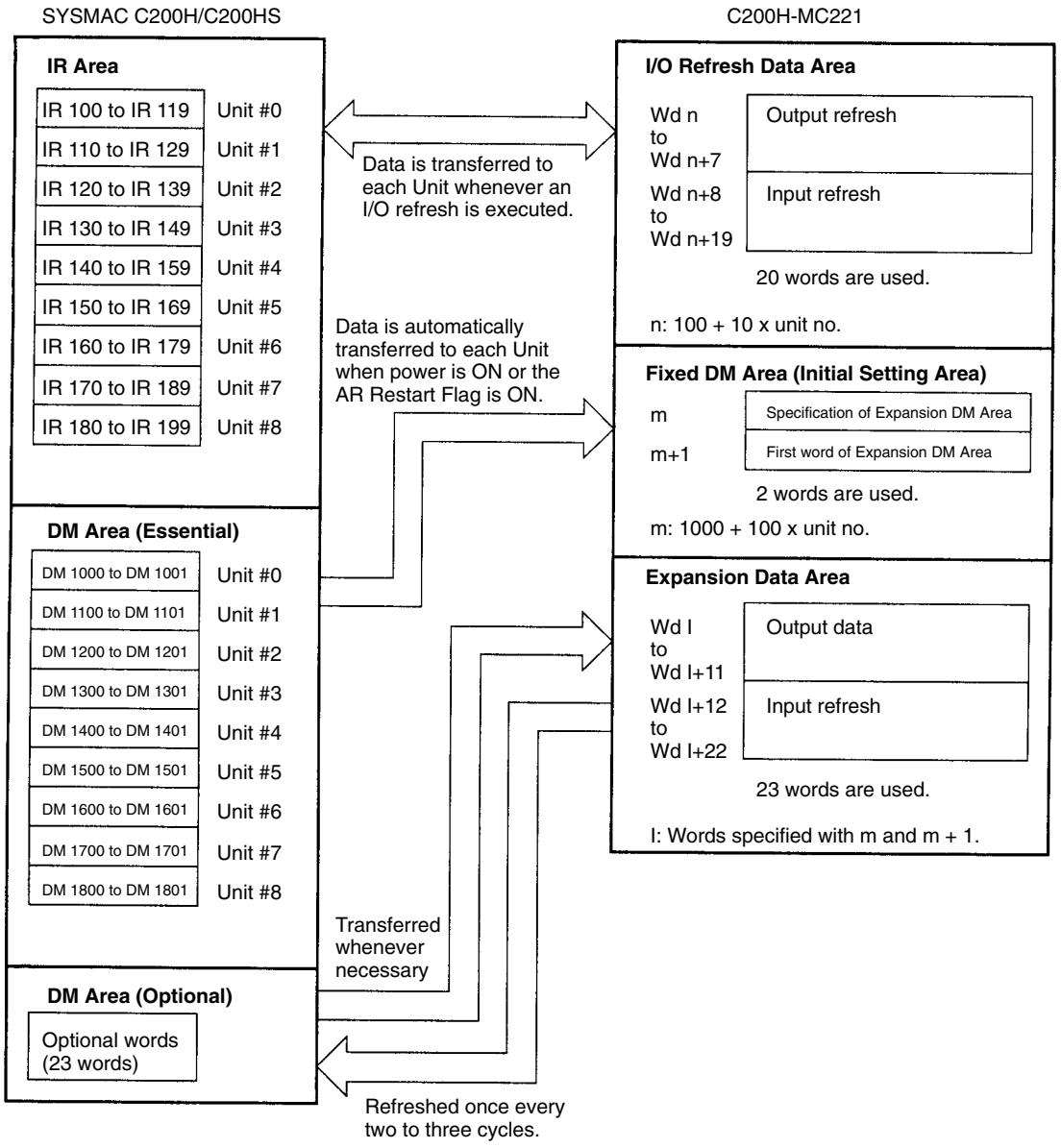

Each MC Unit uses 20 words between IR 100 and IR 199 of the Special I/O Unit Area as an I/O refresh data area.

Each MC Unit uses two words as a Fixed DM Area (i.e., an initial setting area) between DM 1000 and DM 1999.

If an Expansion DM Area is effective, the area occupies 23 words except from DM 1000 to DM 1999. The first word of the Expansion DM Area is specified in the initial setting area.

Note 1. Each unit number must be unique. Do not set unit #9.

2. The essential memory must be within DM 7000 and DM 7999 for the C200HS in linear mode.

PC Interface (C200HX/C200HG/C200HE)

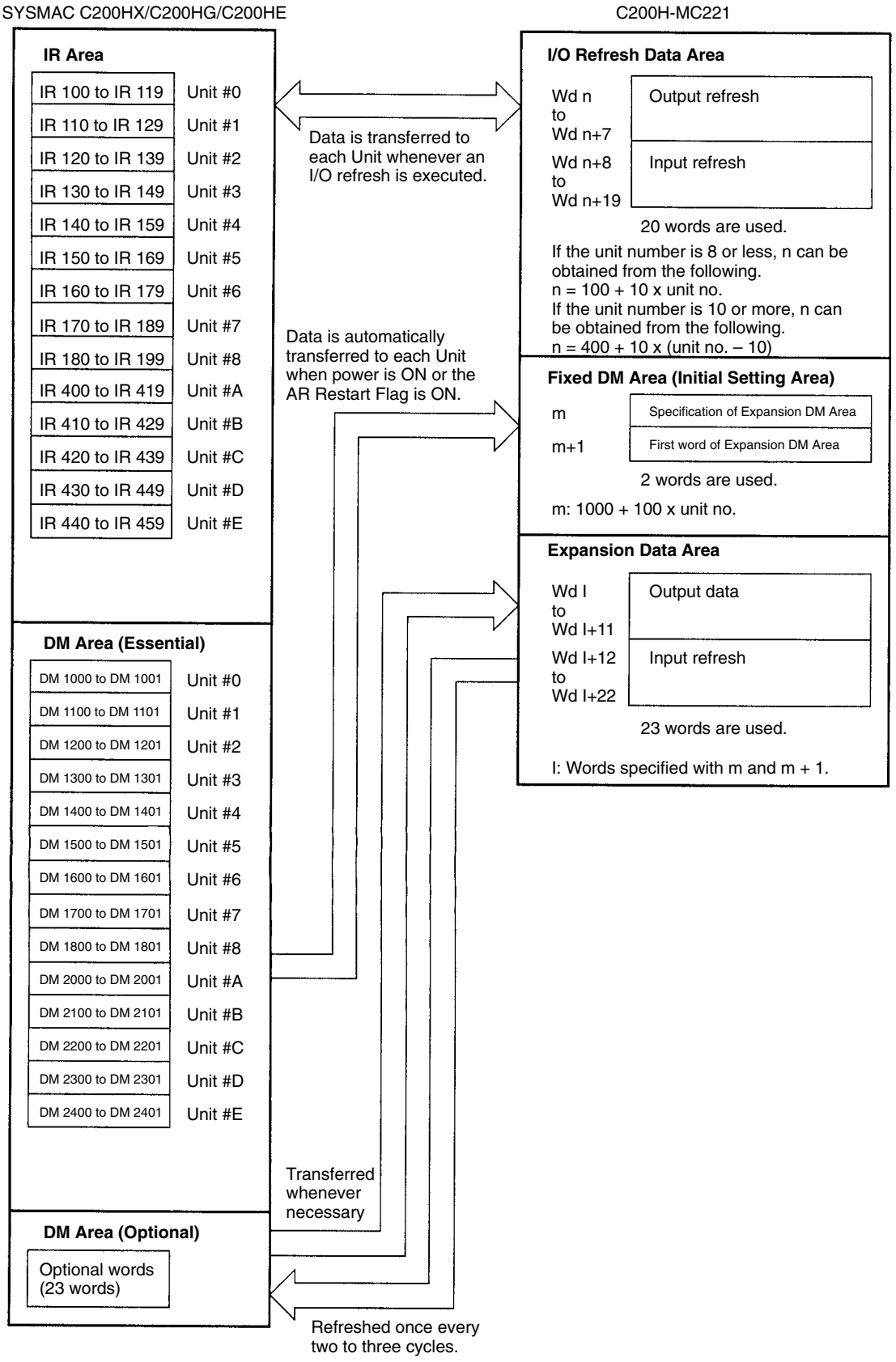

Each MC Unit uses 20 words from IR 100 to IR 199 and IR 400 to IR 459 of the Special I/O Unit Area as an I/O refresh data area.

Each MC Unit uses two words as a Fixed DM Area (i.e., an initial setting area) between DM 1000 and DM 1999.

If an Expansion DM Area is effective, the area occupies 23 words except from DM 1000 to DM 2599. The first word of the Expansion DM Area is specified in the initial setting area.

Note Each unit number must be unique. Do not set unit #9 and F.

Outline of IR Area (I/O Refresh Data Area)

A variety of data is allocated to this area to control tasks and axes for program operation, stop, continuous operation, origin searches, jog origin return operation, or present position monitoring.

	Word	Description
PC to MC	n	Task 1 program no.
	n+1	Task 1 system control bit
	n+2	Task 2 program no.
	n+3	Task 2 system control bit
	n+4	X-axis override
	n+5	X-axis control bit
	n+6	Y-axis override
	n+7	Y-axis control bit
MC to PC	n+8	Error data and system status
	n+9	Error code
	n+10	Task 1 M code
	n+11	Task 1 status
	n+12	Task 2 M code
	n+13	Task 2 status
	n+14	X-axis present position
	n+15	
	n+16	X-axis status (zone, etc.)
	n+17	Y-axis present position
	n+18	
	n+19	Y-axis status (zone, etc.)

X-axis control bit

Bit	Bit name
00	Deceleration stop
01	Origin search
02	Reference origin return
03	Jogging
04	Not used
05	Present position preset
06	Reserved
07	Reserved
08	MPG enabled
09	Servo lock
10	Servo free
11	Driver alarm reset
12	Override set
13	Jogging direction
14	MPG multiplication factor 1
15	MPG multiplication factor 2

For example, if bit 01 of word n+5 is set to ON, the X axis will start an origin search.

Outline of Initial Setting Area

This area includes the following data.

- Data to determine whether to use the Expansion DM Area.
- Data to determine the first word in the DM or EM Area from which the Expansion DM Area is allocated.

This area is referred to only once when power is supplied to the MC Unit or when the MC Unit restarts.

	Words	Outline
PC to MC	n	Specification of Expansion DM Area
	n+1	First word of Expansion DM Area

Outline of Expansion DM Area

Parameters and a variety of monitor data are allocated to this area to use a variety of functions such as data transfer, teaching, and present position presetting functions. This area is valid if the Expansion DM Area is set in the initial setting area.

	Word	Description		
PC to MC	1	Data write	No. of data transfer words	The data is referred to when transferring data or using the present position preset function.
	I+1		Source word	
	I+2		Destination address	
	I+3	Data read	No. of data transfer words	
	I+4		Source address	
	I+5		Destination word	
	I+6	X-axis present position preset value		
	I+7			
	I+8	Y-axis present position preset value		
	I+9			
	I+10	Task 1 teaching start address		
	I+11	Task 2 teaching start address		
MC to PC	I+12	Data read	System	If Expansion DM is read, bit 15 of word n+1 of the IR area will be turned ON and the data will be refreshed once every two to three cycles.
	I+13		Task 1	
	I+14		Task 2	
	I+15		X axis	
	I+16		Y axis	
	I+17	Task 1	Execution program no.	
	I+18		Execution block no.	
	I+19		Teaching address	
	I+20	Task 2	Execution program no.	
	I+21		Execution block no.	
	I+22		Teaching address	

SECTION 8
Test Operation

This section describes the procedures involved in conducting tests using test equipment.

8-1 Mounting the Units 64
8-1-1 Mounting Positions 64
8-1-2 Mounting the Units 64
8-2 Connecting the Computer 65
8-2-1 Connecting via the Peripheral Bus for SYSMAC Support Software 65
8-2-2 Connecting Personal Computer for MC Support Software 65
8-3 Connecting the Teaching Box 68
8-4 Wiring I/O Connectors 70
8-5 Connecting Servodrivers 72
8-6 Wiring Input Units 73
8-7 Starting Up the PC 74
8-8 Setting Parameters 74
8-8-1 Selection of MC Model 75
8-8-2 Minimum Unit 76
8-8-3 Display Unit 76
8-8-4 Pulse Rate 76
8-8-5 Positive and Negative Software Limits 77
8-8-6 Reference Origin Offset 78
8-8-7 Workpiece Origin Offset Value 78
8-8-8 Maximum High-speed Feed Rate 78
8-8-9 Maximum Interpolation Feed Rate 79
8-8-10 Origin Search High Speed 79
8-8-11 Origin Search Low Speed 79
8-8-12 Maximum Jog Feed Rate 80
8-8-13 In-position Value 80
8-9 Saving Parameters 81
8-10 Transferring Parameters 82
8-11 Flash Memory Backup of Parameter 84
8-12 Creating MC Programs 85
8-13 Saving MC Programs 87
8-14 Transferring MC Programs 89
8-15 Flash Memory Backup of MC Program 91
8-16 Creating Ladder-diagram Programs 92
8-17 Checking Operation from the MCSS 94
8-18 Checking Operation from the Teaching Box 98

8-1 Mounting the Units

The Power Supply Unit, CPU, MC Unit, and Input Unit are all mounted to the CPU Backplane.

8-1-1 Mounting Positions

The mounting positions of the Power Supply Unit and the CPU are fixed. The positions of the MC Unit and the Input Unit are not fixed, but for the purposes of this explanation, assume that they are mounted in the positions shown in the following illustration.

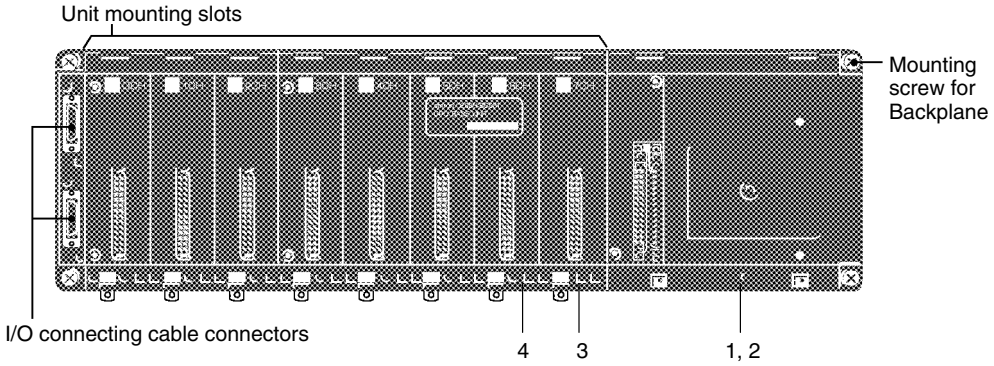

1: Power Supply Unit
2: CPU
3: MC Unit
4: Input Unit

8-1-2 Mounting the Units

Hook the protruding part on the upper part of the MC Unit's rear panel to the Backplane and press the MC Unit's connector to the Backplane to connect the connectors of the MC Unit and Backplane.

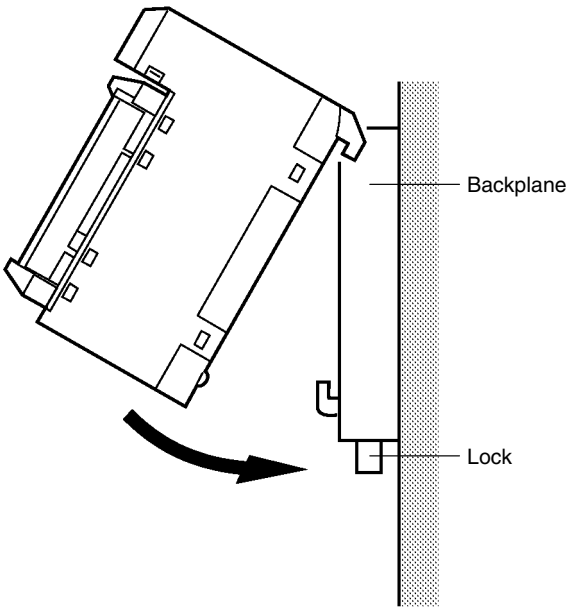

After the MC Unit has been mounted, set the unit number to 0.

Note For details concerning Unit numbers, refer to the *MC Unit Operation Manuals: Details*.

8-2 Connecting the Computer

Two methods are explained below for connecting the computer running the SYSMAC Support Software and MC Support Software.

8-2-1 Connecting via the Peripheral Bus for SYSMAC Support Software

Use a CQM1-CIF02 Connecting Cable (6 meters) to connect the computer and CPU via the peripheral bus. The user will also need to provide a separate connecting cable that fits the connectors at the computer.

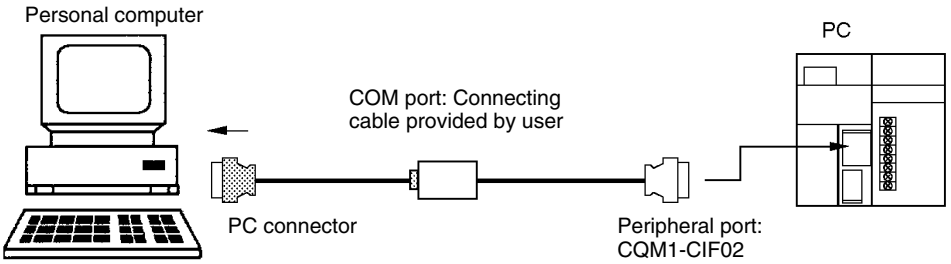

Caution Always connect the CQM1-CIF02 to the computer before connecting it to the CPU. Elements inside the CPU may be damaged if the cable is connected to the CPU first.

8-2-2 Connecting Personal Computer for MC Support Software

The MC Unit and personal computer can be connected via RS-422 or RS-232C under the following conditions.

The user must prepare an RS-232C cable to connect the MC Unit to the personal computer.

Communications rate:	9,600 bps
Parity:	None
Data length:	8 bits
Stop bits:	2 bits
Response monitoring time:	10 s

RS-422 Connections

The following connections are possible.

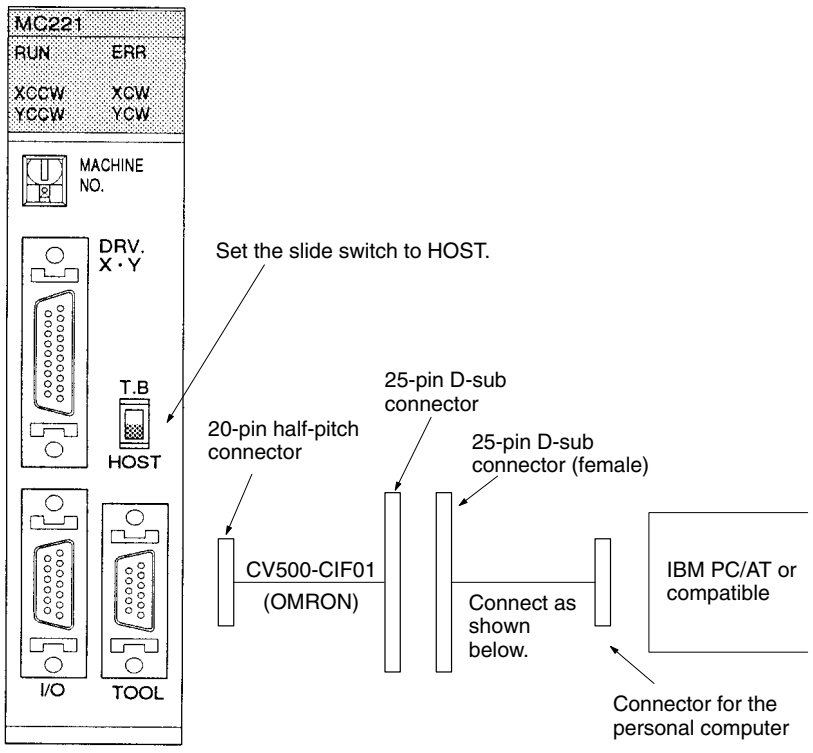

IBM PC/AT Computer

Female 25-pin CV500-CIF01		Female 25-pin RS-232C Connector Computer	
2	SD	3	SD
3	RD	2	RD
4	RTS	7	RTS
5	CTS	8	CTS
6	DSR	6	DSR
7	SG	5	GND
8	DCD	4	DTR

To PC ←

IBM PS/2 Computer

Female 25-pin CV500-CIF01		Female 25-pin RS-232C Connector Computer	
1	F G	1	F G
2	SD	2	SD
3	RD	3	RD
4	RTS	4	RTS
5	CTS	5	CTS
6	DSR	6	DSR
7	SG	7	SG
8	DCD	20	DTR

To PC ←

RS-232C

Wire the following.

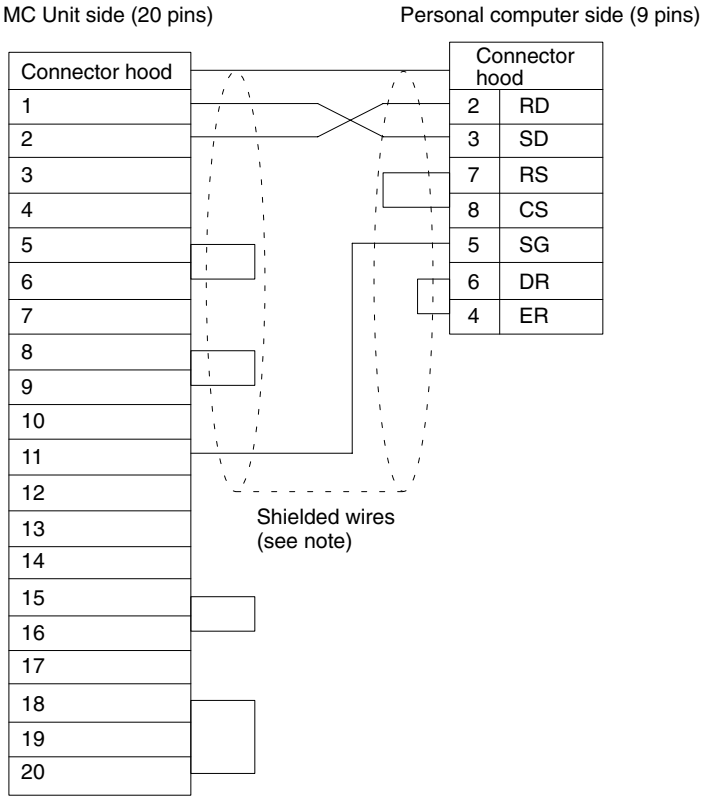

Note Connect the shielded line to the FG (pin 1) at the computer, and to the connector hood at the MC Unit.

Connection Signals at the Computer

Pin number	Signal	Name
Connector hood	FG	Frame Ground
1	CD	Carrier Detect
2	RD	Receive Data
3	SD	Send Data
4	ER	Equipment Ready
5	SG	Signal Ground
6	DR	Data Ready
7	RS	Request Send
8	CS	Can Send

8-3 Connecting the Teaching Box

This section explains how to connect the Teaching Box and MC Unit.

Connecting Cable

Use the connecting cables shown in the following table to connect the Teaching Box to the MC Unit.

Model	Cable length
CV500-CN224	2 meters
CV500-CN424	4 meters
CV500-CN624	6 meters

Note A personal computer or the Teaching Box can be connected to the peripheral device connector of the MC Unit. A personal computer and the Teaching Box cannot both be connected to the peripheral device connector at the same time.

Connecting to the MC Unit

1, 2, 3...

1. To display messages in Japanese on the Teaching Box, set pin 2 of the DIP switch on the MC Unit's rear panel to OFF.

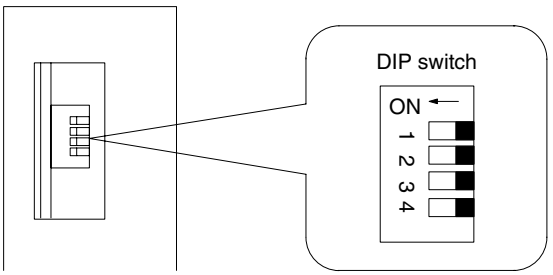

2. Remove the connector cover.

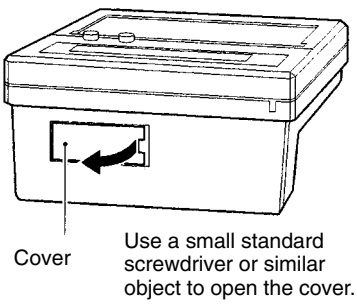

The cover that has been removed can be attached to the back of the Unit for convenience, to keep it from getting lost.

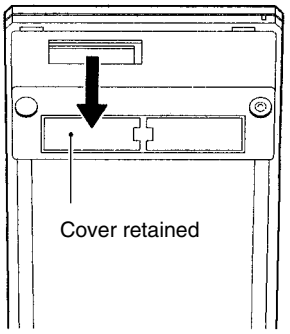

3. Insert the cable connector into the Teaching Box.

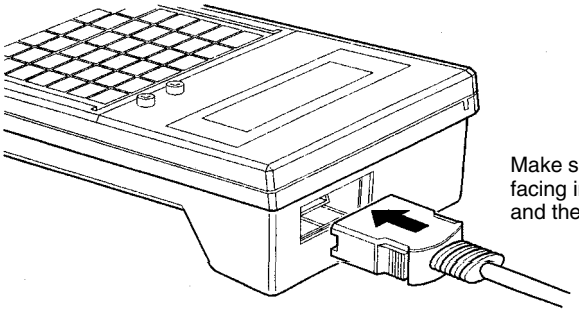

4. Insert the other cable connector into the MC Unit connector marked “TOOL.”

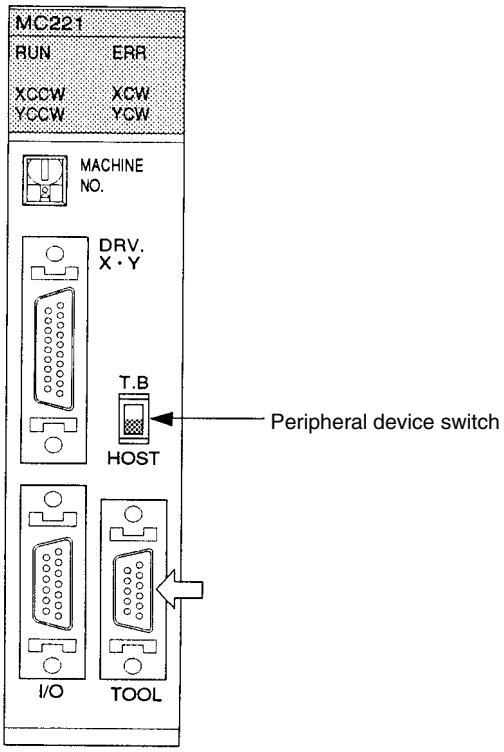

5. Set the peripheral device switch to T.B.

Removing the Connecting Cable

Squeeze the lock release buttons located on both sides of the connector, and pull the connector out.

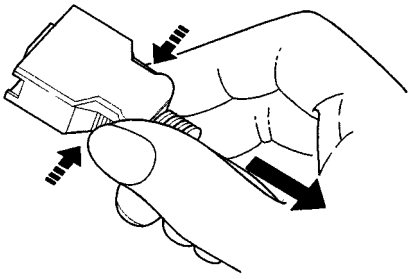

8-4 Wiring I/O Connectors

This section shows how to wire the CW and CCW limit inputs and the origin proximity inputs for each axis via the dedicated cable and terminals.

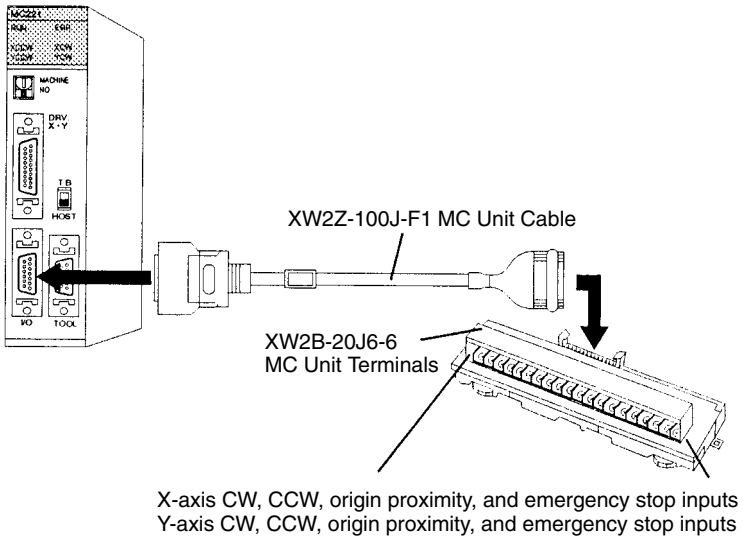

Connection Diagram

The following diagram shows the wiring for the X axis only. Wire the Y axis in the same way.

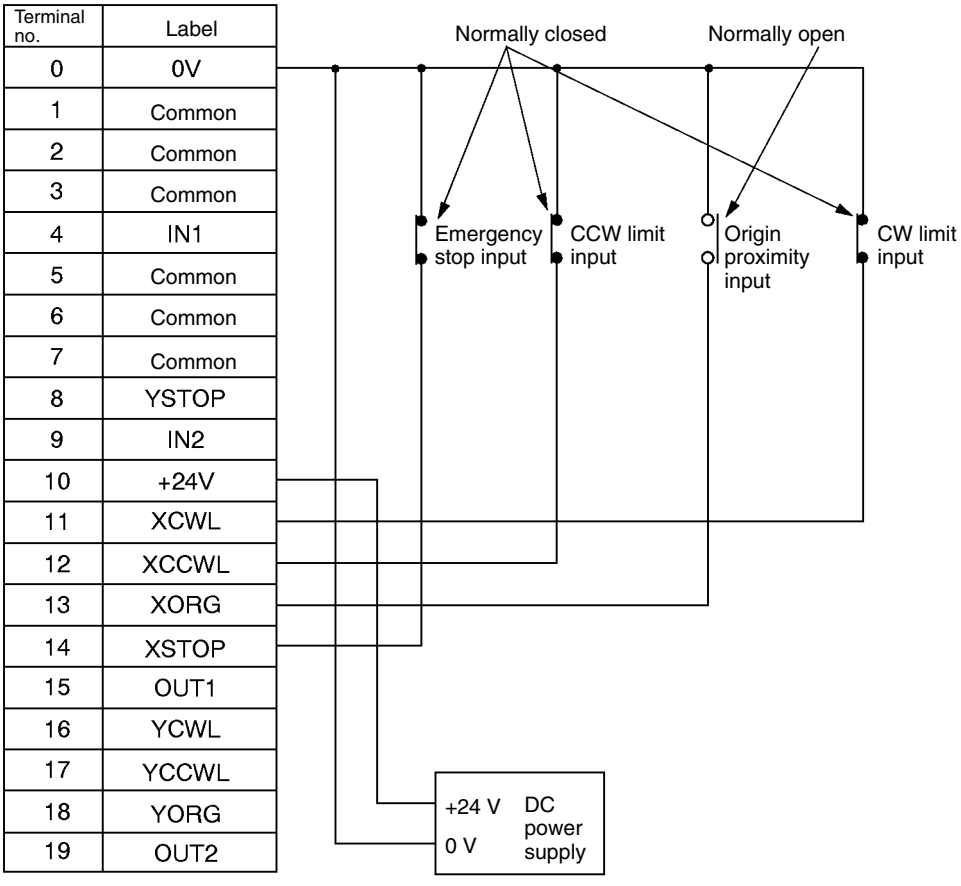

Note OUT1 or OUT2 of the XW2B-20J6-6 are not available for the C200H-MC221.

I/O Connector Terminals

Pin	Symbol[1]	Name	Function
1	+24V	24 VDC input	Connects to the + terminal of the 24-VDC external power supply.
2	XCWL(NC)	X-axis CW limit input	Limits movement of the X-axis in the CW direction.
3	YCWL(NC)	Y-axis CW limit input	Limits movement of the Y-axis in the CW direction.
4	XCCWL(NC)	X-axis CCW limit input	Limits movement of the X-axis in the CCW direction.
5	YCCWL(NC)	Y-axis CCW limit input	Limits movement of the Y-axis in the CCW direction.
6	XSTOP(NC)	X-axis emergency stop input	Invalidates the X-axis's run output and stops it.
7	YSTOP(NC)	Y-axis emergency stop input	Invalidates the Y-axis's run output and stops it.
8	IN1(NO)	General input 1	General input 1
9	IN2(NO)	General input 2	General input 2
10	XORG(NC,NO)[1]	X-axis origin proximity input	Used for the X-axis origin search.
11	YORG(NC,NO)[1]	Y-axis origin proximity input	Used for the Y-axis origin search.
14	DC GND	24 VDC input ground	Connects to the – terminal (0 V) of the 24-VDC external power supply.

Note
1. The origin proximity input can use any of the settings for the origin proximity input logic parameter set from the MCSS.
2. NC stands for normally closed, and NO stands for normally open.
3. Normally-closed input terminals must be shorted-circuited at the connector when not used.
4. Pins 12, 13, and 15 to 16 are not used.

8-5 Connecting Servodrivers

Connect the MC Unit and servodrivers using control cables. The following is an example of the servodriver connections.

Connecting Control Cables

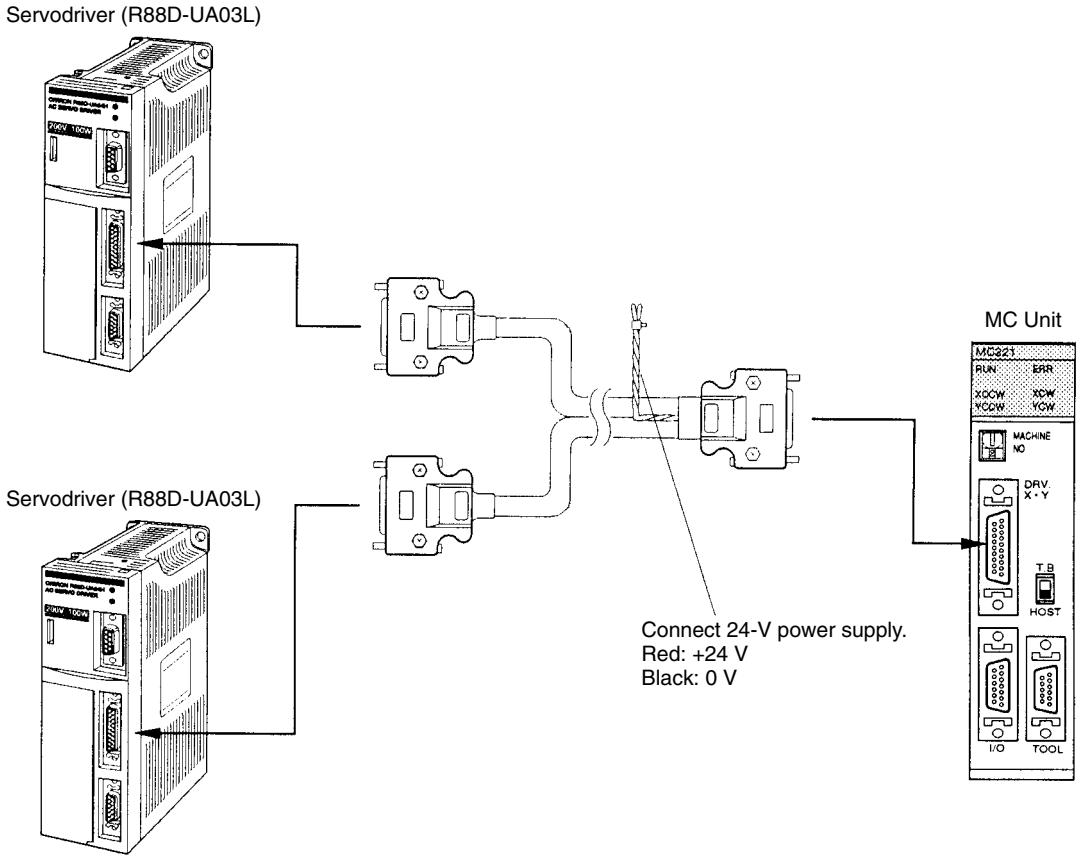

Control Cables

Refer to the *MC Unit Operation Manual: Details* for information on control cables.

Connecting Power Cables and Encoder Cables

The following are examples using servodrivers. Refer to the applicable servo-driver manual for more details.

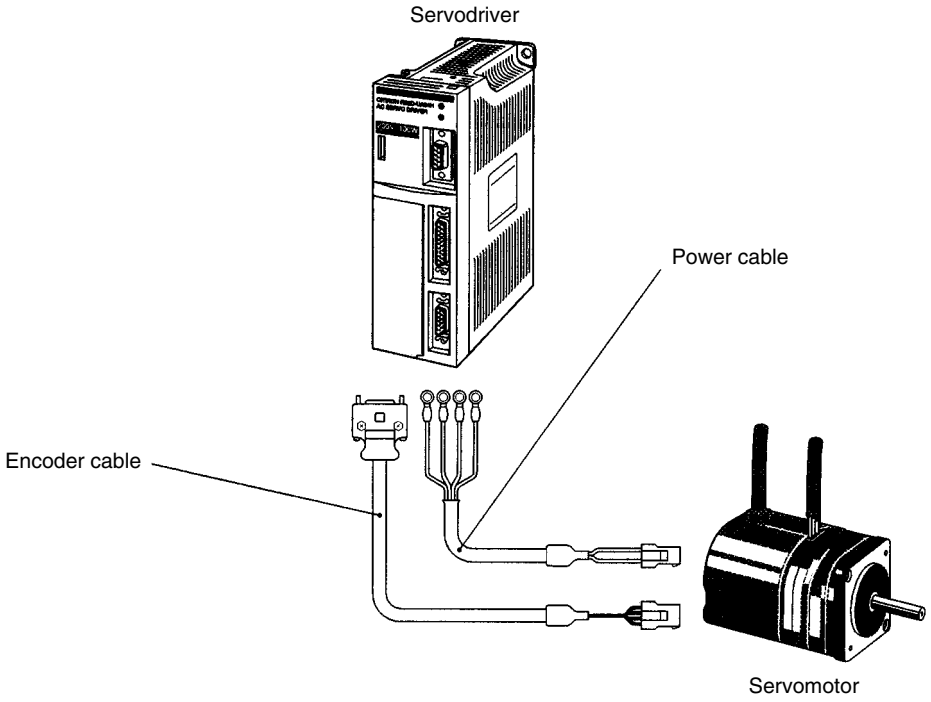

8-6 Wiring Input Units

This section shows how to wire a switch box to an Input Unit. First, prepare a switch box as shown in the following illustration. (This must be done by the user.)

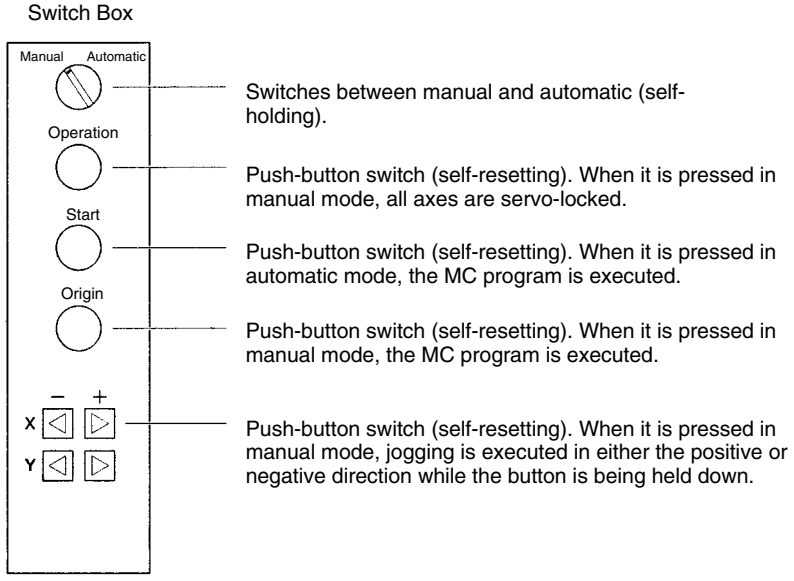

After the switch box has been prepared, wire it to the Input Unit as shown below.

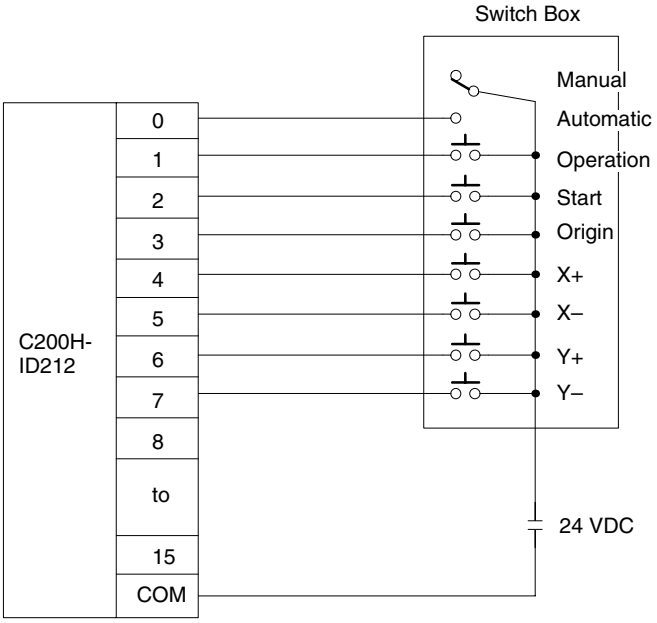

8-7 Starting Up the PC

This section explains how to set the program type and the PC model, and how to create the I/O table. These settings must be made when first mounting the CPU and MC Unit to the CPU Backplane.

It is assumed here that the SYSMAC Support Software has already been installed. Refer to the relevant sections of the *SYSMAC Support Software Operation Manuals* for explanations of installation operations.

1, 2, 3...

1. Start up the SYSMAC Support Software and set the PC model to the following: C200HE-CPU11-E
2. Switch the SYSMAC Support Software to online mode.
3. Create the I/O table according to the status of the Units that are mounted to the Backplane.
4. Return the SYSMAC Support Software to offline mode so that the ladder-diagram program can be created.

8-8 Setting Parameters

This section explains how to set the parameters that are necessary for controlling the MC program. (*8-12 Creating the MC Program* explains how to create the program.)

Set the parameters by changing some of the default values for the MCSS. After the parameters have been set, transfer them to the MC Unit.

The parameters that must be changed or reset are shown in the following table.

Parameters	Item	Set value
Machine parameters	Minimum setting unit	0.01
	Display unit	mm
	Pulse rate	1/100
	Positive and negative software limits	X axis, negative: –50.00
		X axis, positive: 600.00
		Y axis, negative: –50.00
		Y axis, positive: 500.00
Coordinate parameters	Reference origin offset value	0
	Workpiece origin offset value	0
Feed rate parameters	Maximum high-speed feed rate	2,048.00
	Maximum interpolation feed rate	2,048.00
	Origin search high speed	204.80
	Origin search low speed	20.48
	Maximum jog feed rate	204.8
Servo parameters	In-position	5

For items with no axis settings, set the same values for axes X and Y. The methods for setting individual parameters are explained below and on subsequent pages in this section. The procedures are shown using the X-axis setting screens as an example. To make the settings for either the Y axis, press the End Key to display the Machine Parameter Edit, Feed Rate Parameter Edit, and Servo Parameter Edit menus, and select the axes that are to be edited.

It is assumed here that the MCSS has already been installed.

8-8-1 Selection of MC Model

1, 2, 3...

1. Turn on the power supply to the computer, and start up the MCSS.
2. Select “K:MC Models” from the System Setting Menu.

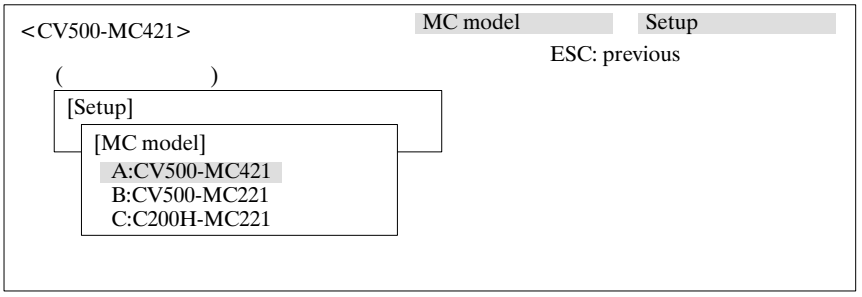

3. Select “C:C200H-MC221” from the MC Model Menu.

8-8-2 Minimum Unit

1, 2, 3... 1. Select “A:Minimum Setting Unit” from the Machine Parameter Edit screen.

```
<C200H-MC221>                    Minimum Setting Unit    X Machine Specs
                                                  ESC: previous
  (            )
  [ Machine Parameter Edit: X Asis ]          Press END to change axis.
                                                        1
   [ Minimum Setting Unit ]                           pulse
   A:1                                        Forward on +V
   B:0.1                                Voltage output to 0V
   C:0.01
   D:0.001                                     INC encoder
   E:0.0001                                          2048  ppr
```

2. Select “C.”

8-8-3 Display Unit

1, 2, 3... 1. Select “B:Display Unit” from the Machine Parameter Edit screen.

```
<C200H-MC221>                    Display Unit            X Machine Specs
                                                  ESC: previous
  (            )
  [ Machine Parameter Edit( X Asis)]          Press END to change axis.
                    it                                  1
   [ Display Unit ]                                   pulse
   A:mm                                       Forward on +V
   B:inch           hod                 Voltage output to 0V
   C:degress
   D:pulse                                     INC encoder
```

2. Select “A.”

8-8-4 Pulse Rate

1, 2, 3... 1. Select “H:Pulse Rate” from the Machine Parameter Edit screen.

```
<C200H-MC221>                    Pulse Rate              X Machine Specs
                                                  ESC: previous
  (            )
  [ Machine Parameter Edit( X Asis)]          Press END to change axis.
                                                      0.01
   [ Pulse Rate ]                                      mm
   Pulse rate numerator                       Forward on +V
          1  mm/pulse                   Voltage output to 0V
   Pulse rate denomerator
          1  mm/pulse                          INC encoder
   (1 to 100000)                                     2048  ppr
```

2. The pulse rate numerator is not changed here, so press either the Down (↓) Key or the Return Key. Move the cursor to the pulse rate denominator value.

```
<C200H-MC221>                    Pulse Rate        X Machine Specs
                                                  ESC: previous
(            )
[ Machine Parameter Edit( X Asis)]              Press END to change axis.
                                                          0.01
[ Pulse Rate ]                                            mm
Pulse rate numerator                            Forward on +V
        1 mm/pulse                        Voltage output to 0V
Pulse rate denomerator
        1 mm/pulse                                INC encoder
(1 to 100000)                                           2048  ppr
```

3. Enter the pulse rate denominator value (100 in this example). After the correct setting has been made, return to the Machine Parameter Edit screen.

Note If the pulse rate is set to a value greater than 1, it will not be possible to return to the Machine Parameter Edit screen by pressing the Return Key. If this situation occurs, reset the pulse rate and then try again.

8-8-5 Positive and Negative Software Limits

1, 2, 3... 1. Select "J:Negative Software Limit" from the Machine Parameter Edit screen.

```
<C200H-MC221>                    Software Limits   X Machine Specs
                                                  ESC: previous
(            )
[ Machine Parameter Edit( X Asis)]              Press END to change axis.
                                                          0.01
[ Software Limits ]                                       mm
Negative software limit                         Forward on +V
              −39999999 mm                  Voltage output to 0V
Positive software limit
              39999999 mm                         INC encoder
(−399999.99 to 399999.99)                               2048  ppr
```

2. Enter the negative software limit (for this example, enter "–50") and then press the Return Key.

```
<C200H-MC221>                    Software Limits   X Machine Specs
                                                  ESC: previous
(            )
[ Machine Parameter Edit( X Asis)]              Press END to change axis.
                                                          0.01
[ Software Limits ]                                       mm
Negative software limit                         Forward on +V
                  −50 mm                    Voltage output to 0V
Positive software limit
              −39999999 mm                        INC encoder
(−399999.99 to 399999.99)                               2048  ppr
```

3. Enter the positive software limit (for this example, enter "600") and then press the Return Key.

8-8-6 Reference Origin Offset

1, 2, 3... 1. Select “A:Reference Origin Offset X Axis” from the Coordinate Parameter Edit screen.

```
<C200H-MC221>                    X Reference Origin    Coord Params
                                                  ESC: previous
 (            )
 [ Coord Parameter Edit      ]
   [ Reference Origin Offset X Axis ]          ?????????? mm
                 0   mm                        ?????????? mm
   (−399999.99 to 399999.99)                   ?????????? mm
```

2. Enter “0” for the offset value and press the Return Key.

8-8-7 Workpiece Origin Offset Value

1, 2, 3... 1. Select “D:Workpiece Origin Offset Y Axis” from the Coordinate Parameter Edit screen.

```
<C200H-MC221>                    Y Workpiece Origin    Coord Params
                                                  ESC: previous
 (            )
 [ Coord Parameter Edit      ]
   [ Workpiece Origin Offset Y Axis ]          0.00 mm
                 0   mm                        ?????????? mm
   (−399999.99 to 399999.99)                   ?????????? mm
```

2. Enter “0” for the offset value and press the Return Key.

8-8-8 Maximum High-speed Feed Rate

1, 2, 3... 1. Select “A:Max High-speed Feedrate” from the Feedrate Parameter Edit screen.

```
<C200H-MC221>                    Max High Speed Feedrate    X Feedrate
                                                  ESC: previous
 (            )
 [ X Feedrate Parameter Edit       ]          Press END to change axis.
   [ Max High-Speed feedrate ]                ?????????? mm/s
                 409600  mm/s                 ?????????? mm/s
   (0.01 to 4096.00)                          ?????????? mm/s
                                              ?????????? mm/s
                                              ?????????? /mms
```

2. Enter the maximum feed rate (“2,048” in this example).

8-8-9 Maximum Interpolation Feed Rate

1, 2, 3... 1. Select “B:Maximum Interpolation Feedrate” from the Feedrate Parameter Edit screen.

```
<C200H-MC221>                    Max Interp Feedrate    X Feedrate
                                                  ESC: previous
 (            )
 [ X Feedrate Parameter Edit      ]          Press END to change axis.
  [ Max Interp Feedrate ]                       2048.00 mm/s
                409600 mm/s                  ?????????? mm/s
  (0.01 to 4096.00)                           ?????????? mm/s
                                              ?????????? mm/s
                                              ?????????? mm/s
```

2. Enter the maximum feed rate (“2,048” in this example).

8-8-10 Origin Search High Speed

1, 2, 3... 1. Select “C:Origin Search High Speed” from the Feedrate Parameter Edit screen.

```
<C200H-MC221>                    Orgn Srch High Speed   X Feedrate
                                                  ESC: previous
 (            )
 [ X Feedrate Parameter Edit      ]          Press END to change axis.
  [ Orgn srch High Speed ]                      2048.00 mm/s
            40960 mm/s                          2048.00 mm/s
  (0.01 to 4096.00)                           ?????????? mm/s
                                              ?????????? mm/s
                                              ?????????? mm/s
```

2. Enter “204.8” and press the Return Key. An error warning will appear, but just disregard it and press any key.

8-8-11 Origin Search Low Speed

1, 2, 3... 1. Select “C:Origin Search Low Speed” from the Feedrate Parameter Edit screen.

```
<C200H-MC221>                    Orgn Srch Low Speed    X Feedrate
                                                  ESC: previous
 (            )
 [ X Feedrate Parameter Edit      ]          Press END to change axis.
  [ Orgn Srch Low Speed ]                       2048.00 mm/s
            4096  mm/s                          2048.00 mm/s
  (0.01 to 4096.00)                             204.80 mm/s
                                              ?????????? mm/s
                                              ?????????? mm/s
```

2. Enter “20.48” and press the Return Key.

8-8-12 Maximum Jog Feed Rate

1, 2, 3... 1. Select “E:Maximum Jog Feedrate” from the Feedrate Parameter Edit screen.

```
<C200H-MC221>                    Max Jog Feedrate        X Feedrate
                                                   ESC: previous
  (            )
  [ X Feedrate Parameter Edit       ]          Press END to change axis.
                                                  2048.00  mm/s
    [ Max Jog Feedrate ]                          2048.00  mm/s
                  40960  mm/s                      204.80  mm/s
    (0.01 to 4096.00)                               20.48  mm/s
                                                ?????????? mm/s
```

2. Enter “204.8” and press the Return Key.

8-8-13 In-position Value

1, 2, 3... 1. Select “B:In-position” from the Servo Parameter Edit screen.

```
<C200H-MC221>                    In Position             Servo (X Axis)
                                                   ESC: previous
  (            )
  [ Servo Parameter Edit( X Axis)]          Press END to change axis.
                                                      10000  pulse
    [ In Position ]                                      10  pulse
           10  puls                                      40  1/s
    (0 to 999)                                            0  %
```

2. Enter “5” and press the Return Key.

8-9 Saving Parameters

This section explains how to save the parameters to a data disk after they have been set.

Filenames must be eight characters or less. (The entire path name can be up to 74 characters.) Comments must be 30 characters or less.

1, 2, 3... 1. Select “S:Save Parameter” from the MC Parameter Edit Menu.

```
<C200H-MC221>                    Parameter Save        MC Parameter Edit
                                                  ESC: previous END: menu
  (            )
  [ MC Parameter Edit ]
 [ Parameter Save ]                          Press END to display directory.
 Enter filename to save.
 C:\MCSS\DATA
```

2. Enter the filename (“PARAM1,” for this example) and then press the Return Key.

```
<C200H-MC221>                    Parameter Save        MC Parameter Edit
                                                  ESC: previous END: menu
  (            )
  [ MC Parameter Edit ]
 [ Parameter Save ]                          Press END to display directory.
 Enter filename to save.
 C:\MCSS\DATA\PARAM1.MCQ
  Z:Edit zone parameters        Enter title
  B:Edit servo parameters
  S:Save parameters
```

3. Enter a comment (“MC1,” for this example) and then press the Return Key.

If the same filename already exists, a message will be displayed for confirmation. To overwrite the existing file, input “Y” and press the Return Key. To cancel the save operation, just press the Return Key.

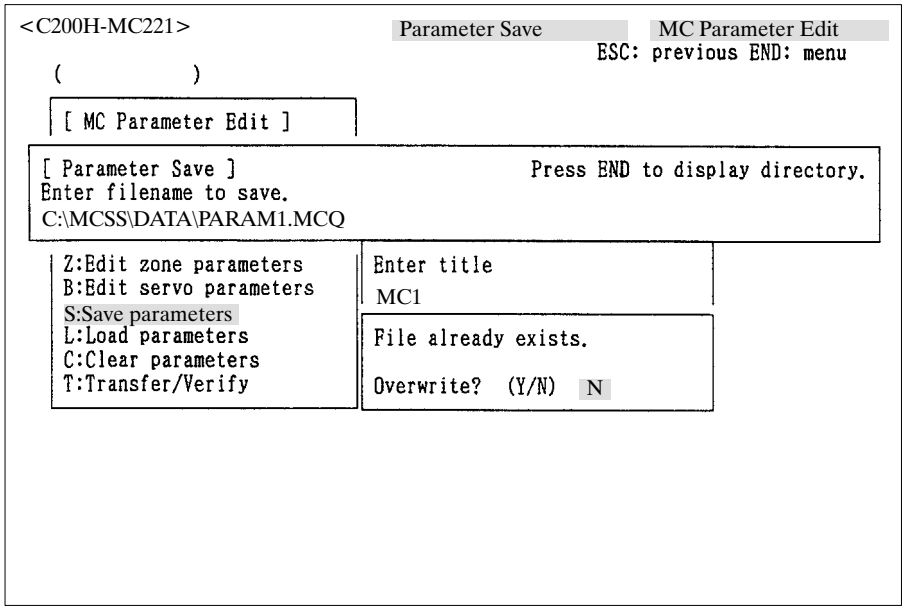

8-10 Transferring Parameters

This section explains how to transfer the parameters to the MC Unit once they have been set.

1, 2, 3... 1. Select “T:Transfer/Verify” from the Main Menu.

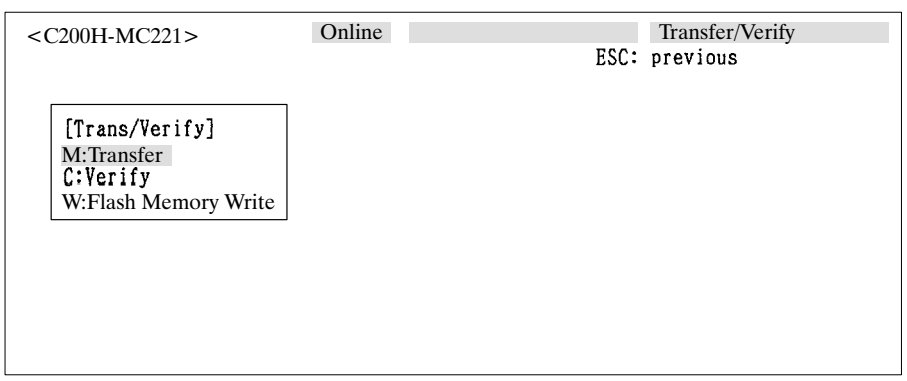

2. Select “M:Transfer” from the Transfer/Verify Menu.

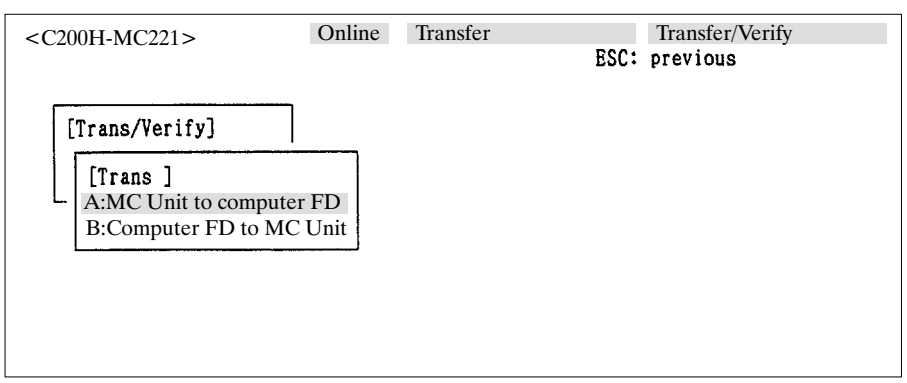

3. Select “B:Computer FD to MC Unit” from the Transfer Menu.

```
<C200H-MC221>          Online   Computer to MC   Transfer
                                                 ESC: previous

 [ Transfer/Verify ]
  [Trans ]
   [ Computer to MC ]
   P:MC programs
   H:MC parameters
   D:Position data
```

4. Select “H:MC Parameters” from the Computer FD to MC Menu.

```
<C200H-MC221>          Online   MC Parameters   Computer to MC
                                                 ESC: previous

 [ Transfer/Verify ]
  [Trans ]
   [ Computer to MC ]
[ MC Parameters ]                          Press END to display Dir.
Source: Enter filename for computer FD
C:\MCSS\DATA\
```

5. Enter the name of the file that is to be transferred (“PARAM1,” for this example). If the file already exists, the filename can be selected from a list by first pressing the End Key to display a list of existing files.

```
<C200H-MC221>          Online   MC Parameters   Computer to MC
                                                 ESC: previous

 [ Transfer/Verify ]
  [Trans ]
   [ Computer to MC ]
[ MC Parameters ]                          Press END to display Dir.
Source: Enter filename for computer FD
C:\MCSS\DATA\PARAM1.MCOQ
                          Transfer files.
                              OK? (Y/N)          N
```

6. A message will be displayed at the bottom of the screen for confirmation. To transfer the file, enter “Y” and press the Return Key. To cancel the transfer operation, just press the Return Key. The transfer status will be displayed while the file is being transferred.

```
<C200H-MC221>          Online   MC Parameters   Computer to MC
                                                ESC: previous

 [ Transfer/Verify ]
   [Trans ]
     [ Computer to MC ]
 [ MC Parameters ]                    Press END to display Dir.
 Source: Enter filename for computer FD
 C:\MCSS\DATA\PARAM1.MCQ
                        ***      Transferring      ***
                        [  o o o o o o o o + o o o o o o o o o o]
                        0                  50                  100
```

8-11 Flash Memory Backup of Parameter

A parameter transferred to the MC Unit is stored as a backup in the flash memory.

1, 2, 3... 1. Select “T:Transfer and Collate” from the Main Menu.

```
<C200H-MC221>          Online                   Transfer/Verify
                                                ESC: previous

 [Trans/Verify ]
 M:Trans
 C:Verify
 W:Flash memory
```

2. Select “W:Flash Memory” from the Transfer and Collate Menu.

```
<C200H-MC221>          Online   Flash memory   Transfer/Verify
                                                ESC: previous

 [Trans/Verify ]
   [Flash memory]
   A:All data
   P:MC program
   H:MC parameter
   D:Position data
```

3. Select “H:MC Parameter” from the Flash Memory Menu.

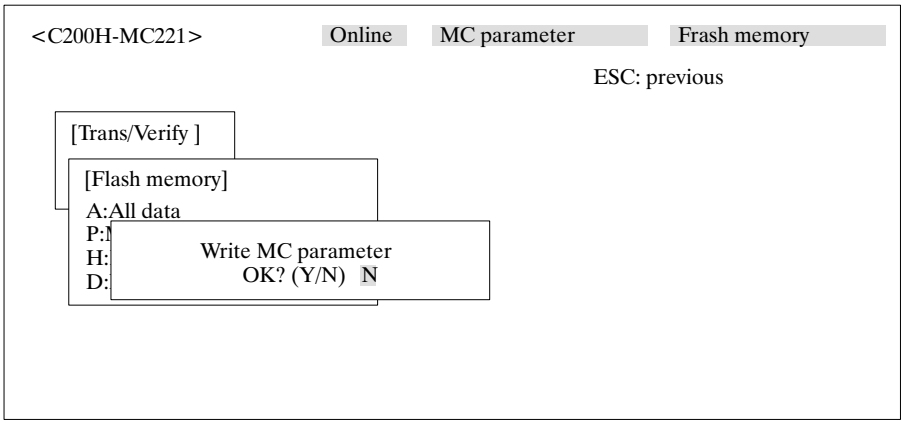

4. A message will be displayed for confirmation. To write the MC parameter, input “Y” and press the Return Key.

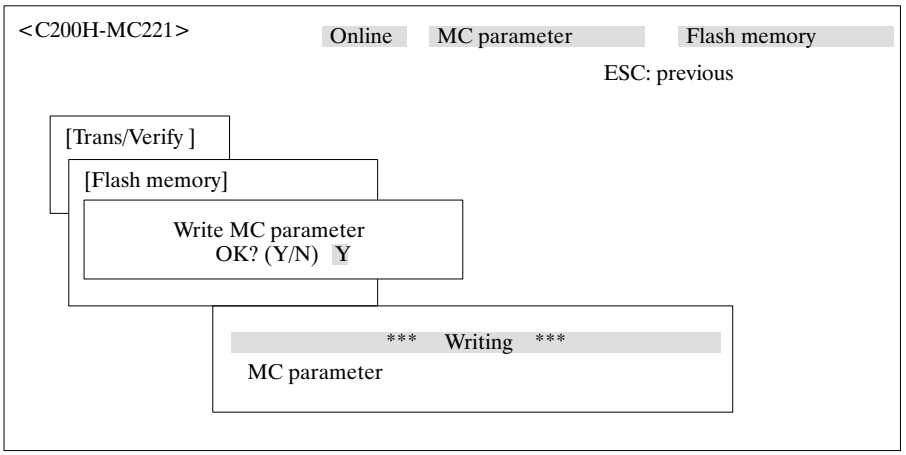

8-12 Creating MC Programs

This section provides a simple explanation of how to use the MCSS to create an MC program. For a more detailed explanation, refer to the *MC Support Software Operation Manual*.

1, 2, 3... 1. Select “P:Edit MC Programs” from the Main Menu. The MC Program Edit screen will be displayed.

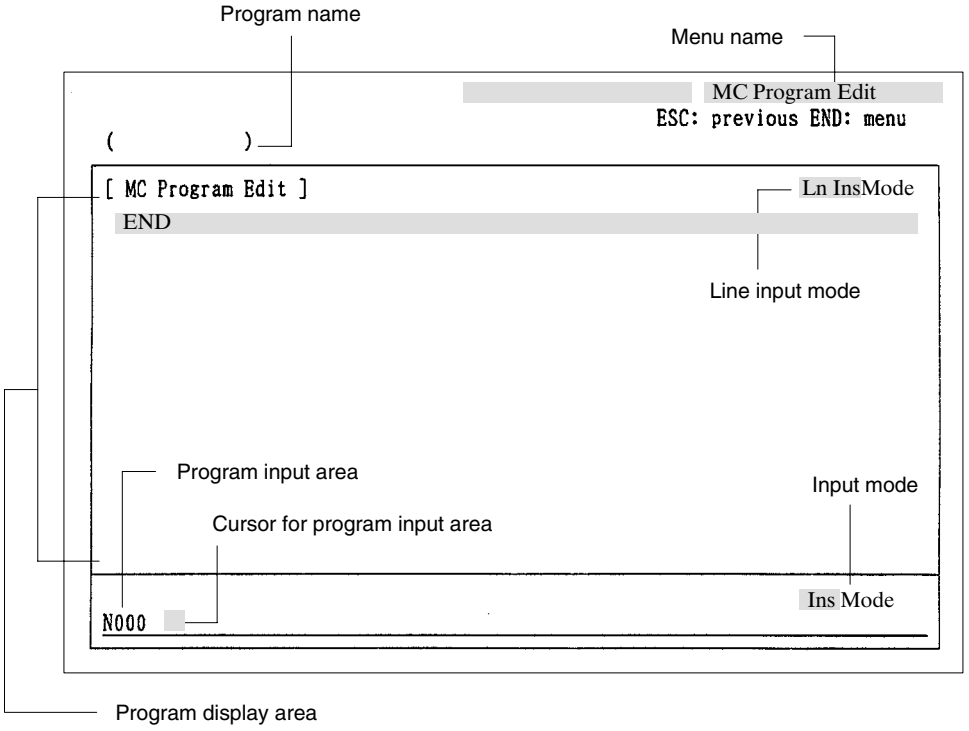

2. Check to make sure that the line input mode is “line insert,” and that the input mode is “insert.”
   If the line input mode is “line overwrite,” press the F4 (Insert) Key. If the input mode is “overwrite,” press the Insert Key.
3. Input the program, pressing the Return Key at the end of each line.

MC Program

The program to be created is shown below.

```
N000   P001 XY
*001   SAMPLE PROGRAM
N002   G04 5
N003   G26 XY
N004   G11
N005   G01 X400 Y300 F30
N006   G01 X100 Y200 F10
N007   G01 X200 Y400 F30
N008   G026 XY
N009   G79
```

Program Contents

N000	States that the program number is “P001,” and that the X and Y axes are to be used.
*001	This is a comment.
N002	Waits five seconds.
N003	Returns the X and Y axes to their reference origins.
N004	Selects the stop mode for positioning.
N005	Moves to X400 Y300 at speed 30.
N006	Moves to X100 Y200 at speed 10.
N007	Moves to X200 Y400 at speed 30.
N008	Returns the X and Y axes to their reference origins.
N009	Ends the program.

8-13 Saving MC Programs

This section explains how to save an MC program to the data disk once it has been created.

Filenames, Directory Names, and Comments

A filename must be entered when a program is saved. Filenames and directory names can contain up to eight characters each. Letters of the alphabet are converted to upper case even if they are entered in lower case. The maximum path length is 78 characters.

Example

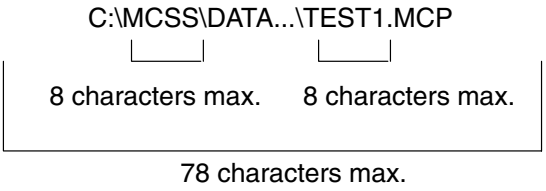

The maximum number of characters that can be used for a comment is 30.

Floppy Disks

Floppy disks used as data disks must be initialized and write-enabled. There must also be sufficient capacity available for the amount of data that is to be saved.

Saving a Program

1, 2, 3...

1. Press the End Key to display the MC Program Edit Menu. Then select "S:Save Programs."

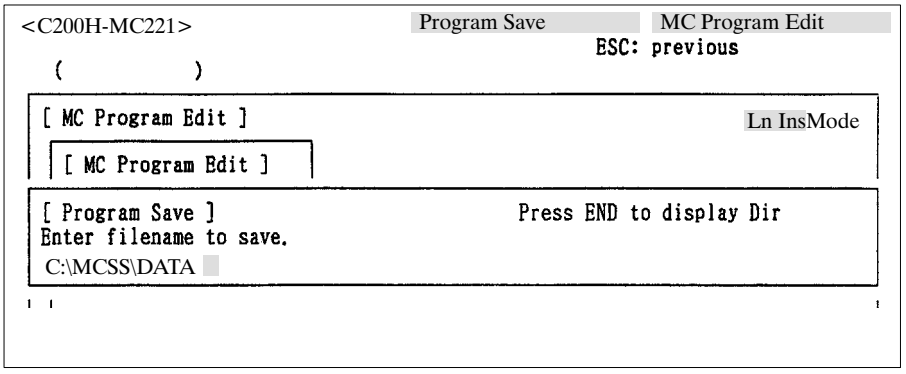

2. Enter the name of the file (SAMPLE, for this example) that is to be saved, and press the Return Key. If the file already exists, the filename can be selected from a list by first pressing the End Key to display a list of existing files.

```
<C200H-MC221>                    Program Save        MC Program Edit
                                                  ESC: previous
  (            )
 [ MC Program Edit ]                                          Ln InsMode
  [ MC Program Edit ]
 [ Program Save ]                          Press END to display Dir
 Enter filename to save.
 C:\MCSS\DATA\SAMPLE.MCP
                                 Enter title
```

3. Enter a comment ("NC1," for this example). To omit the comment, just press the Return Key.

   If the same filename already exists, a message will be displayed for confirmation. To save the new file with that name, input "Y" and press the Return Key. To cancel the save operation, just press the Return Key.

```
<C200H-MC221>                    Program Save        MC Program Edit
                                                  ESC: previous
  (            )
 [ MC Program Edit ]                                          Ln InsMode
  [ MC Program Edit ]
 [ Program Save ]                          Press END to display Dir
 Enter filename to save.
 C:\MCSS\DATA\SAMPLE.MCP
                                 Enter title
                                 NC1
                                 File already exists
                                     Overwrite?     (Y/N)    N
```

The time required to save the file will depend on the capacity of the program.

8-14 Transferring MC Programs

This section explains how to transfer MC programs to the MC Unit.

1, 2, 3... 1. Select “T:Transfer/Verify” from the Main Menu.

```
<C200H-MC221>          Online                    Transfer/Verify
                                                 ESC: previous

 [Trans/Verify]
 M:Transfer
 C:Verify
 W:Flash Memory Write
```

2. Select “M:Transfer” from the Transfer/Verify Menu.

```
<C200H-MC221>          Online   Transfer          Transfer/Verify
                                                 ESC: previous

 [Trans/Verify]
  [Trans ]
  A:MC Unit to computer FD
  B:Computer FD to MC Unit
```

3. Select “B:Computer FD to MC Unit” from the Transfer Menu.

```
<C200H-MC221>          Online   Computer to MC    Transfer
                                                 ESC: previous

 [ Transfer/Verify ]
  [Trans ]
   [ Computer to MC ]
   P:MC programs
   H:MC parameters
   D:Position data
```

4. Select “P:MC Programs” from the Computer FD to MC Unit Menu.

```
<C200H-MC221>                 Online   MC Programs        Computer to MC
                                                          ESC: previous

 [Trans/Verify]
  [Trans ]
   [ Computer to MC ]
[ MC Programs ]                                  Press END to display Dir.
Source: Enter filename for computer FD (All programs: Enter *)
C:\MCSS\DATA\
```

5. Enter the name of the file that is to be transferred (“SAMPLE,” for this example). If the file already exists, the filename can be selected from a list by first pressing the End Key to display a list of existing files.

```
<C200H-MC221>                 Online   MC Programs        Computer to MC
                                                          ESC: previous

 [Trans/Verify]
  [Trans ]
   [ Computer to MC ]
[ MC Programs ]                                  Press END to display Dir.
Source: Enter filename for computer FD (All programs: Enter *)
C:\MCSS\DATA\SAMPLE.MCP
                          Transfer files.
                             OK? (Y/N)          N
```

6. A message will be displayed at the bottom of the screen for confirmation. To transfer the file, enter “Y” and press the Return Key. To cancel the transfer operation, just press the Return Key. The transfer status will be displayed while the file is being transferred.

```
<C200H-MC221>                 Online   MC Programs        Computer to MC
                                                          ESC: previous

 [Trans/Verify]
  [Trans ]
   [ Computer to MC ]
[ MC Programs ]                                  Press END to display Dir.
Source: Enter filename for computer FD (All programs: Enter *)
C:\MCSS\DATA\SAMPLE.MCP
                          ***        Transferring    ***
                          [  o o o o o o o o + o o o o o o o o o o]
                          0                  50                  100
```

8-15 Flash Memory Backup of MC Program

An MC program transferred to the MC Unit is stored as a backup in the flash memory.

1, 2, 3... 1. Select “T:Transfer/Verify” from the Main Menu.

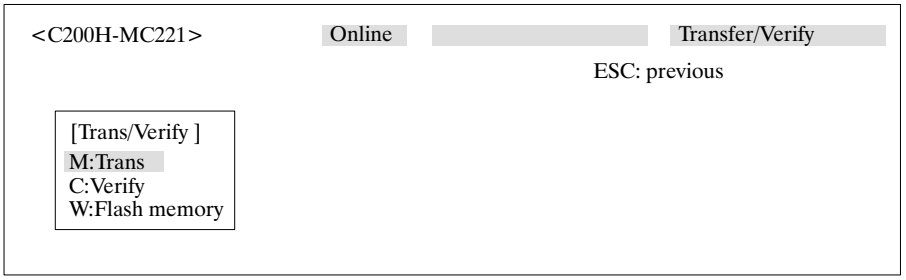

2. Select “W:Flash Memory” from the Transfer and Collate Menu.

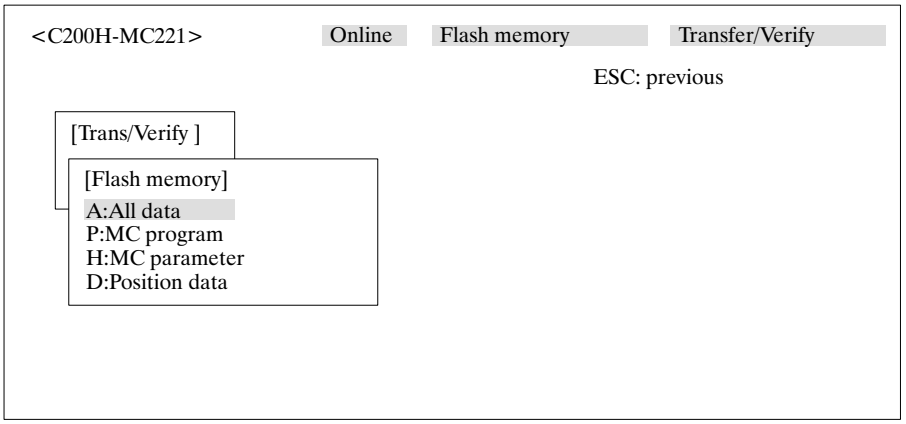

3. Select “P:MC Program” from the Flash Memory Write Menu.

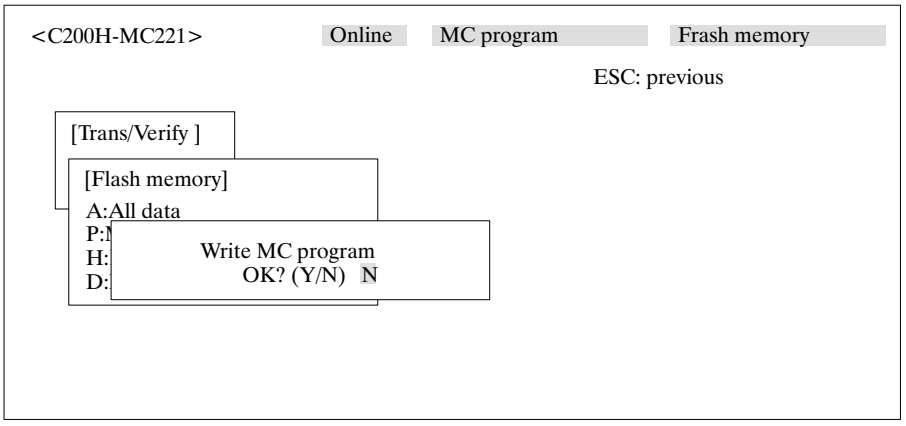

4. A message will be displayed for confirmation. To write the MC program, input “Y” and press the Return Key.

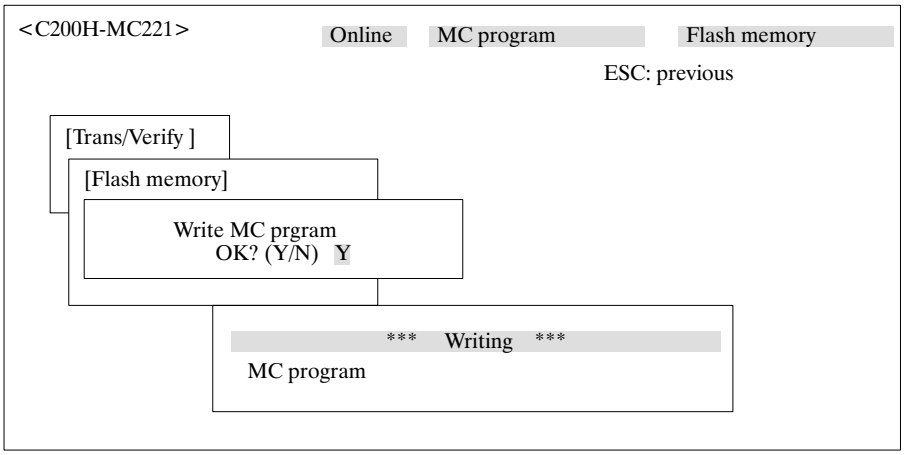

8-16 Creating Ladder-diagram Programs

This section explains how to create ladder-diagram programs using the SYSMAC Support Software. These programs can be used in manual mode to execute servo-locks, origin searches, and jogging, and in automatic mode to execute MC programs.

After a ladder-diagram program has been created, it must be transferred to the PC.

Note For more details regarding ladder-diagram programs, refer to the following manuals.
4-2 Inputting the Program of *SYSMAC Support Software Operation Manual: Basics*
Section 2 Programming of *SYSMAC Support Software Operation Manual: C Series*

Ladder-diagram Program Notation

Bit names with pointed brackets < > indicate interface output bits. Bit names with parentheses ( ) indicate interface input bits.

Note For more details regarding interface bits, refer to the *MC Unit Operation Manual: Details*.

Word Allocation

The ladder-diagram programs explained here are for MC Unit #0. Therefore, the interface area is allocated 20 words beginning with IR 100.

Bits 003000 to 003007 are IR bits. No Expansion DM Area is allocated to the initial setting area (DM 1000 to 1001).

Procedure

For detailed instructions regarding any of these procedures, refer to the relevant sections in the *SYSMAC Support Software Operation Manuals*.

1, 2, 3...

1. Create the ladder-diagram program for executing the MC program.
2. Save the ladder-diagram program to a data disk.
3. Switch the SYSMAC Support Software to the online mode.
4. Transfer the ladder-diagram program to the PC.
5. Monitor the MC program by switching the PC to MONITOR mode and then executing the MC program.

Ladder-diagram Program Input the ladder-diagram program shown below.

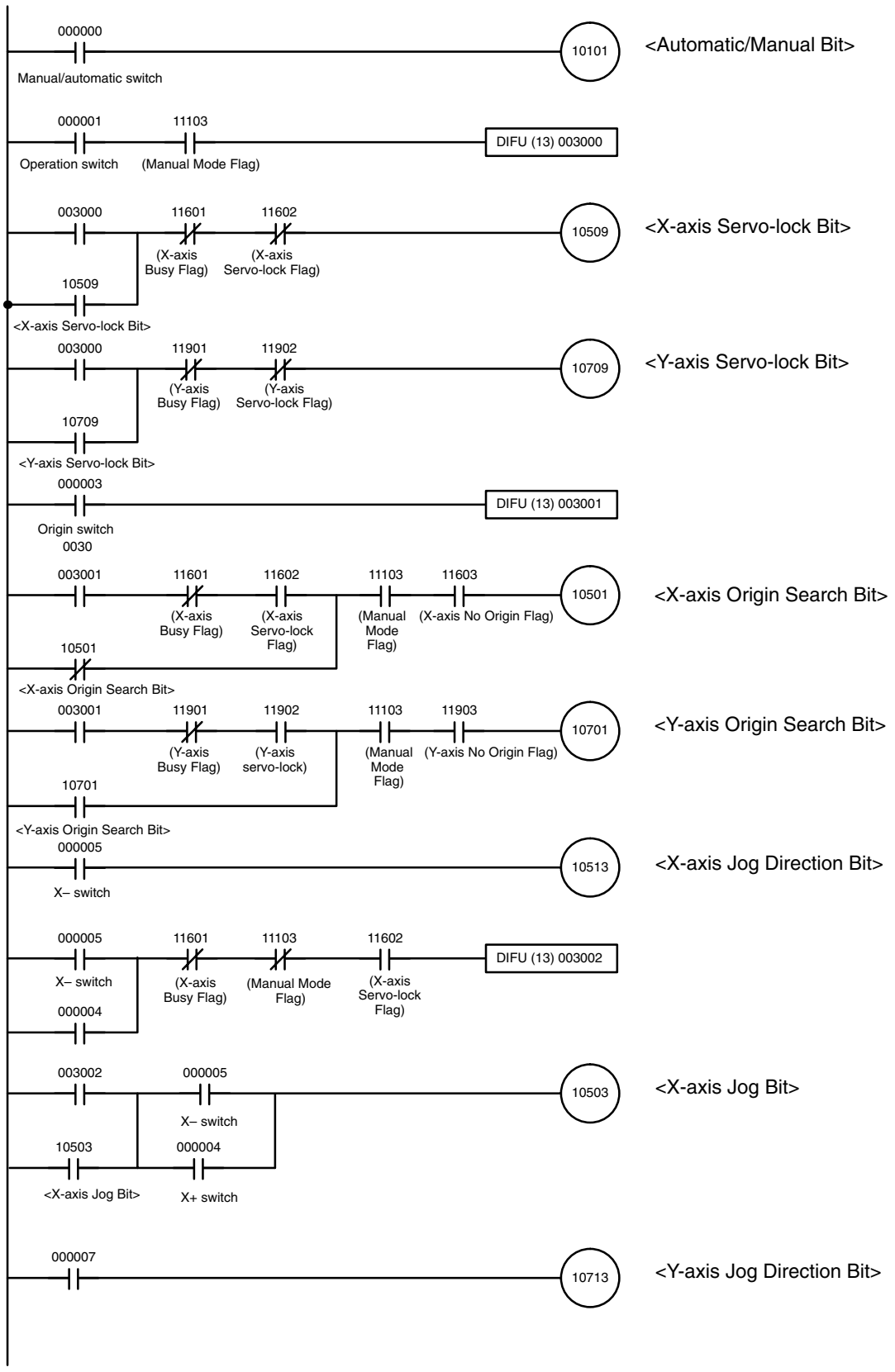

(Continued on next page.)

(Continued from previous page.)

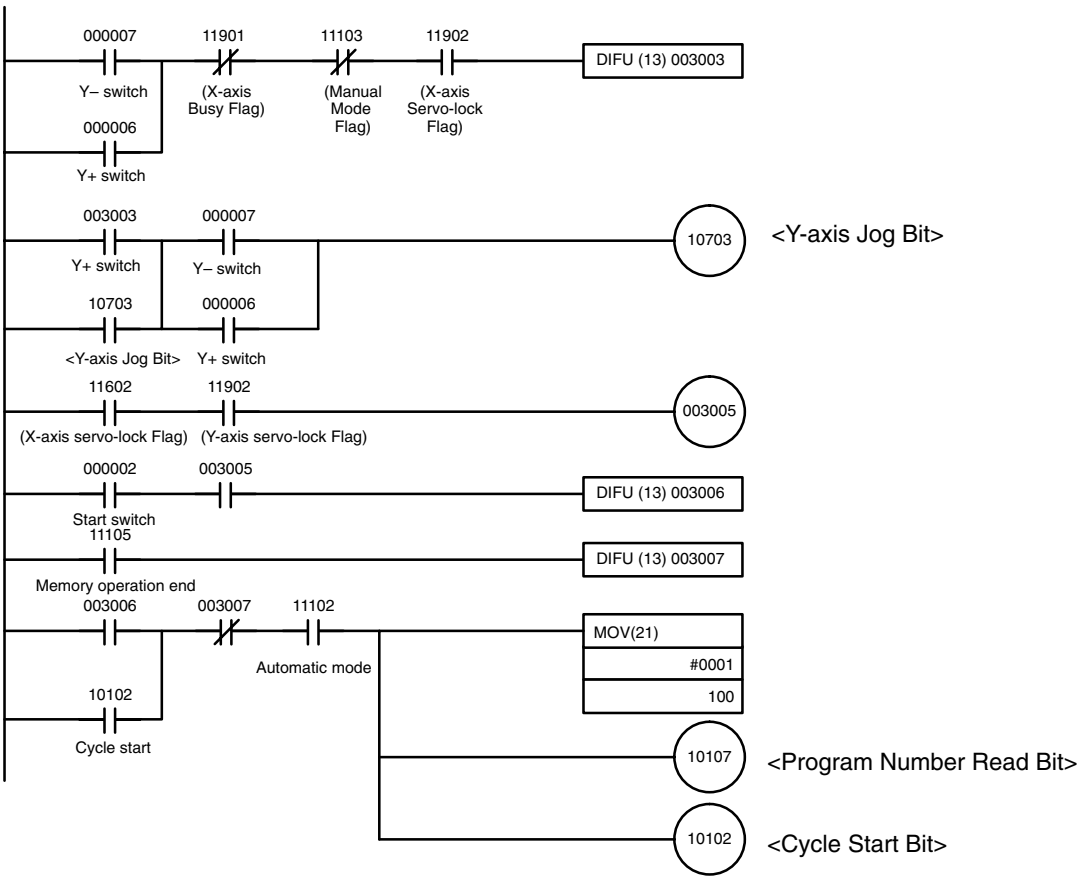

Note A task error reset is required for when an error occurs during trial operation. Add an error reset like the one shown below to the program.

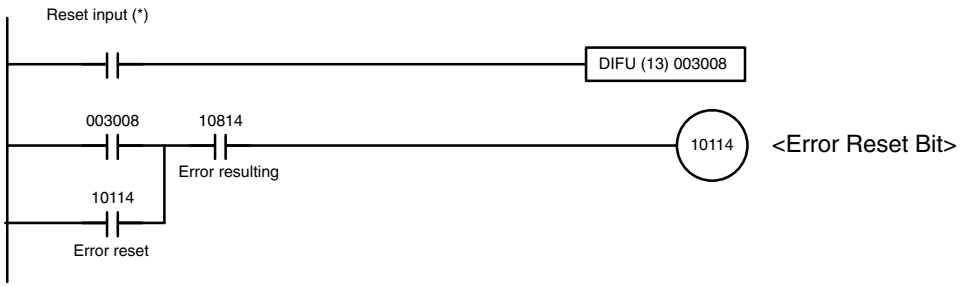

*Allocation an input bit for the reset.

Interface bit IR 10814 is used in an NC condition to break the self-holding bit when the error is reset.

8-17 Checking Operation from the MCSS

After the wiring has been completed, the parameters have been set, and the MC program and the ladder-diagram program have been input and transferred, check the operation by means of the following procedure. Each of the steps in the procedure is explained in more detail on subsequent pages.

1, 2, 3...

1. Turn on the power to the Power Supply Unit, the servodriver, and the computer.
2. Start MC monitoring.
3. Set the automatic/manual switch to manual, and then press the Program Execution Key.

4. Press the Origin Search Key.
5. Press the Jog Key.
6. Set the automatic/manual switch to automatic, and press the Start Key.

Note When checking operation using a ladder-diagram program, be sure that the Teaching Box mode is set to T. BOX LIMITED. Commands from the PC cannot be received in T. BOX RESERVED or T. BOX ENABLED mode. For details, refer to *8-18 Checking Operation from the Teaching Box*.

Turning On the Power Supply

When power is turned on to the MC Unit, an error will not be generated if the servodriver alarm input is ON from the beginning. An error will be generated if the servodriver alarm turns ON, or if a command is executed accompanying axis operation with the alarm input turned ON. This allows the power-up sequence of the MC Unit and the servodriver to be easily coordinated.

The power must be turned on to the Programmable Controller when carrying out online operations from the computer. If it is not on, an error will be generated.

Starting MC Monitoring

MC monitoring is used to check the present position for each axis. To use MC monitoring, start up the MCSS and select “M:MC Monitoring” from the Main Menu. (For more details regarding MC monitoring, refer to the *MCSS Operation Manual*.

```
<C200H-MC221>                Online                    MC Monitoring
                                                  ESC: previous END: menu

[ PV Display ]
     <Reference Coordinate>                  <Workpiece Coordinate>
X Axis                    0.01 mm        X Axis                    0.01 mm
Y Axis                    0.00 mm        Y Axis                    0.00 mm

     <Reference Coordinate>                      <Deviation Count>
X Axis                       1 puls      X Axis                      0 puls
Y Axis                       0 puls      Y Axis                     -1 puls

      <Workpiece Origin Shift>
X Axis                    0.00 mm
Y Axis                    0.00 mm
```

Checking Servo-lock

The servos for axes X and Y axes will be locked when the Program Execution Key is pressed while in manual mode. Power will be supplied for each axis, and the CW and CCW indicators on the MC Unit will light for the X and Y axes.

The present position and the number of error counter pulses are changed in the vicinity of “0” on the MC Monitoring Screen.

```
<C200H-MC221>                Online                    MC Monitoring
                                                  ESC: previous END: menu

[ PV Display ]
     <Reference Coordinate>                <Workpiece Coordinate>
X Axis                  -0.01 mm       X Axis                  -0.01 mm
Y Axis                   0.02 mm       Y Axis                   0.02 mm

     <Reference Coordinate>                    <Deviation Count>
X Axis                    -1 puls      X Axis                    -3 puls
Y Axis                     2 puls      Y Axis                     1 puls
```

Checking Origin Search

When the Origin Search Key is pressed while in manual mode, an origin search is executed along the X and Y axes. Positioning moves to the origin at each axis. When the origin search is completed, the reference coordinate system’s present position will be near “0” on the MC Monitoring Screen.

Checking the Jog Operation

Positioning will move in the positive direction along the X axis, at jog speed, while the +X Key is being pressed, and the X-axis present position will be incremented on the MC Monitoring Screen. Likewise, positioning will move in the negative direction along the X axis, at jog speed, while the –X Key is being pressed, and the X-axis present position will be decremented on the MC Monitoring Screen. The jog operation can be checked in the same way for the Y axls.

```
<C200H-MC221>                Online                    MC Monitoring
                                                  ESC: previous END: menu

[ PV Display ]
     <Reference Coordinate>                <Workpiece Coordinate>
X Axis                 136.36 mm       X Axis                 136.36 mm
Y Axis                   0.00 mm       Y Axis                   0.00 mm

     <Reference Coordinate>                    <Deviation Count>
X Axis                 13636 puls      X Axis                    -4 puls
Y Axis                     0 puls      Y Axis                    -1 puls
```

Note Be sure that the present position does not exceed the software limit that has been set. If that limit is exceeded, either a CW or CCW direction software limit error will be generated.

Checking MC Program Operation

The MC program can be checked by setting the automatic/manual switch to automatic and then pressing the Start Key to execute the MC program. Follow the procedure shown below to display the MC program on the MC Monitoring screen and check it.

1, 2, 3...

1. Set the automatic/manual switch to automatic.
2. Press the Start Key.

3. Press the End Key from the MC Monitoring screen to display the Monitoring Menu.

```
<C200H-MC221>          Online                          MC Monitoring
                                                 ESC:  previous

 [ PV Display ]
                                        <Workpiece Coordinate>
  [ MC Monitoring ]                   X Axis                  0.00 mm
  P:Display MC programs               Y Axis                  0.00 mm
  F:Display FAL status
  S:Display MC I/O status
                                           <Deviation Count>
                                      X Axis                    0 puls
```

Note If steps 3 through 5 are executed before the Start Key is pressed, a message will be displayed at the bottom left of the screen indicating that the program has not been executed. Monitoring can be carried out if program execution is begun by pressing the Start key.

4. Select “P:Display MC Programs” from the MC Monitoring Menu.

```
<CV500-MC221>          Online                          MC Monitoring
                                                 ESC: previous   END: menu

 [ PV Disply ]
                                        <Workpiece  Coordinate>
  [ MC Monitoring ]                   X Axis                  0.00 mm
  P:I                                 Y Axis                  0.00 mm
  F:I   [MC program]
  S:I     1:Task 1
          2:Task 2
                                           <Error Counter>
                                      X Axis                    0 puls
                                      Y Axis                   −1 puls
```

5. Select "1:Display Task 1" from the MC Program Display Menu. The program will be displayed on the screen, and the block being executed will be shown in reverse video.

```
<C200H-MC221>                    Online   MC Program Display   MC Monitoring
                                                    ESC: previous END: menu
  (Tsk1,P00 )
 [ MC Program Display ]
  N000 P001 XY
  *001 SAMPLE PROGRAM
  N002 G04  5 :
  N003 G26 X Y
  N004 G11
  N005 G01 X400 Y300 F30
  N006 G01 X100 Y200 F10
  N007 G01 X200 Y400 F30
  N008 G26 XY
  N009 G79

 [ PV  Display ]
 X Axis   * * * * * * * * * * *      Y Axis   * * * * * * * * * * *

 Task status   [ 1 *  2 *            ]            Running  *   Stopped
```

6. Press the F1 Key to display the present position at the bottom of the screen. Check to see that positioning is proceeding to the coordinates set by the MC program that is being executed.

```
 [ PV  Display ]
 X Axis                 −0.07 mm        Y Axis                    0.02 mm
                         0.01 mm                                  0.00 mm

 Task status   [ 1 *  2 *            ]            Running  *   Stopped
```

8-18 Checking Operation from the Teaching Box

This section explains how to use the Teaching Box to execute the MC program and the jog operation. It explains cycle run, in which the specified program is executed from the beginning, and single-block run, in which the specified program is executed one block at a time.

When the Teaching Box is connected to the MC Unit, it first goes into T. BOX LIMITED mode, in which only monitoring is possible. In order to execute the cycle run, single-block run, or jogging operation, the mode must be switched to either T. BOX RESERVED or T. BOX ENABLED. The operation mode can only be changed from the Teaching Box itself.

If servo-lock and origin search have not been executed using the switch box, execute the origin search from the Teaching Box after setting the servo-lock status before executing the MC program and jog operation.

Changing the Mode to T. BOX RESERVED

1, 2, 3... 1. Press the EXT Key.

```
EXT|              1/2
 1. CHANGE MODE
 2. SERVO LOCK
 3. SERVO FREE
```

2. Press “1.”

```
EXT|-CHG MODE-
   | T.BOX
   | LIMITED
   |SWITCH:↑,↓
```

3. Press the Down Key. (Pressing the Up and Down Keys switches among the three modes.)

```
EXT|-CHG MODE-
   | T.BOX
   | RESERVED
   |SWITCH:↑,↓
```

Executing Servo-lock

1, 2, 3... 1. Select “2. SERVO LOCK” from the Extension Mode Menu.

```
EXT|-SERVO LOCK-
   | 0.ALL AXES
   | 1.X
   | 2.Y
```

2. Select the axis or axes.

```
EXT|-SERVO LOCK-
   | OK?
ALL|
   | YES / NO
```

The specified axis/axes are shown here.

3. Press the YES Key. Servo-lock will be executed, and then the following screen will be displayed.

```
EXT|-SERVO LOCK-
   |
ALL| COMPLETE!
   |
```

Executing Origin Search for All Axes

1, 2, 3... 1. Press the ORIG SRCH Key.

```
ORG|0.ALL AXES
   |1.X
   |2.Y
   |
```

2. Select the axis or axes.

```
ORG|
   | OK?
ALL|
   | YES / NO
```

The specified axis/axes are shown here.

3. Press the YES Key. An origin search will be started and the present position monitoring screen will be displayed.

```
ORG|X*      12.00
   |Y*      12.32
ALL|
   |
```

The asterisk (*) indicates that the origin is not defined.

The present position is refreshed for moving axes.

The origin search operation is completed when the axes have been moved to the reference coordinate system origin and stopped. The asterisks disappear at that point, and the present position is shown as “0.”

When the origin search operation has been completed for the specified axes, the following screen will be displayed.

```
ORG|
   |
ALL| COMPLETE!
   |
```

4. Press the CLR Key. The axis selection screen in step one of this procedure will return.

Note The CLR Key is not effective during the origin search operation. To halt the origin search operation in progress, press the PAUSE Key.

Clearing Errors

When an error occurs at the MC Unit or the servodriver, clear it by means of the following procedures.

Resetting MC Unit Errors

1, 2, 3...

1. Press the ERR CLR Key.

```
[RT]

  1.MC UNIT
  2.DRIVER
```

2. Press “1.”

```
[RT]     MC UNIT

 RESET ERROR ?
   YES / NO
```

3. Press the YES Key. The error will be reset for the task in which the error occurred.

```
[RT]     MC UNIT

 ERROR RESET!
```

Resetting Servodriver Errors

1, 2, 3...

1. Select “2.DRIVER” from the MC Unit’s Error Reset Procedure 1 Menu.

```
[RT]        DRIVER
      0.ALL AXES
      1.X
      2.Y
```

2. Press a number from 0 to 4 to select the number of axes to be reset.

```
[RT]      DRIVER
 <ALL AXES>
 RESET ERROR ?
   YES / NO
```

The specified axis or axes are displayed here.

0: All axes 1: X axis
2: Y axis

Executing the Jog Operation

1, 2, 3...

1. Press the JOG Key. The Unit will go into jog mode and the following screen will be displayed.

```
JOG|X        0.00
   |Y        0.00
   |
050|
```

The override values are displayed here. The default value is 50%. Press the Up and Down Keys to set the value from 10% to 100% in increments of 10%.

2. To execute jogging along the X or Y axes, press any of the following six jog feed keys: +X, +Y, –X, –Y. The specified axis will move in the specified direction, and the present position will be refreshed on the screen.

Executing Cycle Run

1, 2, 3...

1. Press the PROG EXEC Key.

```
RUN|1.CYCLE RUN
   |2.SINGLE RUN
   |
   |
```

2. Select “1. CYCLE RUN” from the menu.

```
RUN|-CYCLE RUN-
CYC|PROGRM P000
TK1|BLOCK  N000
   |  RUN: START
```

Task 1 is displayed.

3. Specify the program number. In this case, the program number is 001, so just input “1.”

```
RUN|-CYCLE RUN-
CYC|PROGRM P001
TK1|BLOCK  N000
   |  RUN: START
```

4. Press the START Key.

```
RUN|STATUS RUN
CYC|PROGRM P050
TK1|BLOCK  N010
   |
```

When the PAUSE Key is pressed, program execution is paused and the previous screen is restored. Program execution is resumed by pressing the START Key. The program cannot be executed while an error is in effect.

5. Press the CLR Key after the program has been completed. The menu for selecting the operation mode will be restored. (The CLR Key is not effective during program execution.)

Executing Single-block Run

1, 2, 3... 1. Select “2.SINGLE RUN” from the menu.

```
RUN|-SINGLE RUN-
SIN|PROGRM P000
TK1|BLOCK  N000
   |  RUN: START
```

Task 1 is displayed.

2. Specify the program number. In this case, the program number is 001, so just input “1.” If the program number is already set to 001 after the execution of cycle run, there is no need to enter anything here.

```
RUN|STATUS RUN
SIN|PROGRM P001
TK1|BLOCK  N002
   |
```

3. Press the START Key. The first block of program no. 001 will be executed. In this case, since the first block is a comment, block N002 will be executed.

```
RUN|STATUS RUN
SIN|PROGRM P001
TK1|BLOCK  N002
   |
```

To halt the operation in progress, press the PAUSE Key.

4. When execution of the first block has been completed, “pause” status will go into effect and program execution will be stopped. The number of the next block to be executed will be displayed.

```
RUN|STATUS PAUSE
SIN|PROGRM P001
TK1|BLOCK  N003
   |  RUN: START
```

Press the PROG EXEC Key to execute the next block. Press the CLR Key to return to the program number input screen. Then press the CLR Key again to return to the operation mode menu.

Glossary

absolute position A position given in respect to the origin rather than in respect to the present position.

acceleration/deceleration curve Curves which determine the rate of acceleration to the maximum feed rate and the rate of deceleration from the maximum feed rate.

auxiliary bit A bit in the Auxiliary Area.

Backplane A base to which Units are mounted to form a Rack. Backplanes provide a series of connectors for these Units along with buses to connect them to the CPU and other Units and wiring to connect them to the Power Supply Unit. Backplanes also provide connectors used to connect them to other Backplanes.

basic instruction A fundamental instruction used in a ladder diagram. See *advanced instruction*.

baud rate The data transmission speed between two devices in a system measured in bits per second.

BCD Short for binary-coded decimal.

binary A number system where all numbers are expressed in base 2, i.e., numbers are written using only 0's and 1's. Each group of four binary bits is equivalent to one hexadecimal digit. Binary data in memory is thus often expressed in hexadecimal for convenience.

bit The smallest piece of information that can be represented on a computer. A bit has the value of either zero or one, corresponding to the electrical signals ON and OFF. A bit represents one binary digit. Some bits at particular addresses are allocated to special purposes, such as holding the status of input from external devices, while other bits are available for general use in programming.

block number Numbers used to distinguish blocks in MC programs. Block numbers are roughly equivalent to program line numbers.

bus A communications path used to pass data between any of the Units connected to it.

channel See *word*.

comment block A program block that contains comments input by the programmer. Comment blocks and program blocks share the same block numbers, but comment blocks begin with an asterisk rather than an "N."

control bit A bit in a memory area that is set either through the program or via a Programming Device to achieve a specific purpose, e.g., a Restart Bit is turned ON and OFF to restart a Unit.

counter A dedicated group of digits or words in memory used to count the number of times a specific process has occurred, or a location in memory accessed through a TC bit and used to count the number of times the status of a bit or an execution condition has changed from OFF to ON.

CPU The name of the Unit in a PC that contains the main CPU and other main PC components. See also *central processing unit*.

CPU Backplane A Backplane used to create a CPU Rack.

CPU Rack The main Rack in a building-block PC, the CPU Rack contains the CPU, a Power Supply, and other Units. The CPU Rack, along with the Expansion CPU Rack, provides both an I/O bus and a CPU bus.

CW and CCW Abbreviations for clockwise (CW) and counterclockwise (CCW). CW and CCW are defined for a motor shaft in reference to a viewer facing the shaft on the end of the motor from which the shaft extends from the motor for connection.

CW/CCW limits Limits on the CW and CCW sides of the origin which can be internally set to restrict rotation of the shaft.

data area An area in the PC's memory that is designed to hold a specific type of data.

decimal A number system where numbers are expressed to the base 10. In a PC all data is ultimately stored in binary form, four binary bits are often used to represent one decimal digit, via a system called binary-coded decimal.

DM Area A data area used to hold only word data. Words in the DM area cannot be accessed bit by bit.

dwell time A setting that specifies the period of time during which positioning will stop before execution of the next positioning action.

error counter A counter used to ensure positioning accuracy when positioning via pulse trains. The error counter receives a target position as a specific number of pulses in a pulse train from the Motion Control Unit and outputs analog speed voltages to drive a servomotor accordingly. The specified number of pulses in the error counter is counted down by feedback from an encoder measuring actual motor shaft movement, causing voltage output to stop when the number of pulses equals zero, i.e., when the target position has been reached.

feedback The return of a portion of the output of a circuit or device to its input. It is used in servocontrol systems to help bring actual values closer to target values.

flag A dedicated bit in memory that is set by the system to indicate some type of operating status. Some flags, such as the carry flag, can also be set by the operator or via the program.

gain The increase in signal power produced by an amplifier.

G language A programming language used widely in position control. Program functions are entered simply by entering a "G," a 2-digit numerical code, and adding any needed parameters.

hunting The tendency, in servosystems, to overcompensate when the system's momentum carries it past the target position.

IBM PC/AT or compatible A computer that has similar architecture to, that is logically compatible with, and that can run software designed for an IBM PC/AT computer.

inching Manual feeding wherein positioning is executed one pulse at a time.

incremental position A position given in respect to the present position, rather than in respect to the origin.

initial position The present position when a start command is executed.

in position The range within which the system is determined to be at the target position.

input The signal coming from an external device into the PC. The term input is often used abstractly or collectively to refer to incoming signals.

interpolation The mathematical calculation of missing values based pm known values. The Motion Control Unit uses interpolation when positioning along two or more axes simultaneously. There are three types of interpolation possible: linear, circular, and helical (a combination of linear and circular).

interface An interface is the conceptual boundary between systems or devices and usually involves changes in the way the communicated data is represented. Interface devices such as NSBs perform operations like changing the coding, format, or speed of the data.

IR Area A data area whose principal function is to hold the status of inputs coming into the system and that of outputs that are to be set out of the system. Bits and words in the IR that are used this way are called I/O bits and I/O words. The remaining bits in the IR area are work bits.

least-significant (bit/word) See *rightmost (bit/word)*.

leftmost (bit/word) The highest numbered bits of a group of bits, generally of an entire word, or the highest numbered words of a group of words. These bits/words are often called most-significant bits/words.

linear interpolation Dual-axis, linear positioning from the present position to a point designated as the interpolation end point based on specified points.

load The processes of copying data either from an external device or from a storage area to an active portion of the system such as a display buffer. Also, an output device connected to the PC is called a load.

local In network communications, the node or device from which communications are being viewed. See *remote*.

LSS Abbreviation for Ladder Support Software.

M code An abbreviation for machine code. The user can set various M codes for various positions so that each M code will be output when the workpiece passes its respective position.

MC program A G-language program that controls the MC Unit's operation.

megabyte A unit of storage equal to one million bytes.

most-significant (bit/word) See *leftmost (bit/word).*

MS-DOS An operating system in common use on smaller computers.

NC contacts Normally-closed contacts. A pair of contacts on a relay that open when the relay is energized.

negative software limit The lower limit on the number of pulses set as a software parameter.

nesting Programming one loop within another loop, programming a call to a subroutine within another subroutine, or programming an IF–ELSE programming section within another IF–ELSE section.

NO contacts Normally-open contacts. A pair of contacts on a relay that close when the relay is energized.

OFF The status of an input or output when a signal is said not to be present. The OFF state is generally represented by a low voltage or by non-conductivity, but can be defined as the opposite of either.

offline The state in which a Programming Device is not functionally connected to the CPU, although it may be connected physically.

offset A positive or negative value added to a base value such as an address to specify a desired value.

ON The status of an input or output when a signal is said to be present. The ON state is generally represented by a high voltage or by conductivity, but can be defined as the opposite of either.

online The state in which a Programming Device is functionally connected to the CPU so that CPU data and programs can be monitored or accessed.

online edit An edit to a program made from a peripheral device connected to and currently online with a PC in PROGRAM or MONITOR mode. In MONITOR mode, this means that the program is changed while it is actually being executed.

origin proximity input A signal input to indicate that the axis is near the origin.

origin search An operation used to automatically move the axes to the origin or to define the origin.

output The signal sent from the PC to an external device. The term output is often used abstractly or collectively to refer to outgoing signals.

parameters Data which determines limits and other conditions under which an operation will be carried out.

PC An acronym for Programmable Controller.

PC Setup A group of operating parameters set in the PC from a Programming Device to control PC operation.

positive software limit The upper limit on the number of pulses set as a software parameter.

present value The current value registered in a device at any instant during its operation. Present value is abbreviated as PV. The use of this term is generally restricted to timers and counters.

program block A unit of programming in MC programs roughly equivalent to program lines.

Programmable Controller A computerized device that can accept inputs from external devices and generate outputs to external devices according to a program held in memory. Programmable Controllers are used to automate control of external devices. Although single-unit Programmable Controllers are available, building-block Programmable Controllers are constructed from separate components. Such Programmable Controllers are formed only when enough of these separate components are assembled to form a functional assembly, i.e., there is no one individual Unit called a PC.

Programming Device A Peripheral Device used to input a program into a PC or to alter or monitor a program already held in the PC. There are dedicated programming devices,

such as Programming Consoles, and there are non-dedicated devices, such as a host computer.

pulses Discrete signals sent at a certain rate. The Motion Control Unit outputs pulses, each of which designates a certain amount of movement. Such pulses are converted to an equivalent control voltage in actual positioning.

pulse rate The distance moved the motor shaft divided by the number of pulses required for that movement.

pulse train A series of pulses output together.

remote In network communications, the node or device with which communications are taking place. See *local*.

retrieve The processes of copying data either from an external device or from a storage area to an active portion of the system such as a display buffer. Also, an output device connected to the PC is called a load.

rightmost (bit/word) The lowest numbered bits of a group of bits, generally of an entire word, or the lowest numbered words of a group of words. These bits/words are often called least-significant bits/words.

RUN mode The operating mode used by the PC for normal control operations.

servicing The process whereby the PC provides data to or receives data from external devices or remote I/O Units, or otherwise handles data transactions for Link Systems.

servolock An operation whereby a rotary encoder is used to maintain the position of a motor while it is stopped. Whenever the motor axis moves, the rotary encoder sends a feedback pulse to an error counter, causing a rotation voltage to be generated in the reverse direction so that the motor rotates back to its original position.

software error An error that originates in a software program.

SSS Abbreviation for SYSMAC Support Software.

sub-program A group of instructions that are executed independently of the main program.

target position A parameter for a positioning action that designates what position is to be reached at the completion of the action.

teaching Automatically writing the present position into memory, via the Teaching Box, as the target position for the designated positioning action.

transfer The process of moving data from one location to another within the PC, or between the PC and external devices. When data is transferred, generally a copy of the data is sent to the destination, i.e., the content of the source of the transfer is not changed.

uploading The process of transferring a program or data from a lower-level or slave computer to a higher-level or host computer. If a Programming Devices is involved, the Programming Device is considered the host computer.

watchdog timer A timer within the system that ensures that the scan time stays within specified limits. When limits are reached, either warnings are given or PC operation is stopped depending on the particular limit that is reached.

WDT See *watchdog timer*.

wiring check A check performed automatically at startup to detect wiring problems such as reversed polarity or disconnections.

word A unit of data storage in memory that consists of 16 bits. All data areas consists of words. Some data areas can be accessed only by words; others, by either words or bits.

work bit A bit that can be used for data calculation or other manipulation in programming, i.e., a 'work space' in memory. Also see *work word*.

write-protect A state in which the contents of a storage device can be read but cannot be altered.

zone A range of positions or values which can be defined so that flags are turned ON whenever the present position is within the range.

Index

A

AC relay, 4

acceleration/deceleration curves, 17, 41
  S, 42
  trapezoidal, 42

acceleration/deceleration times, 17, 37
  circular interpolation, 40
  linear interpolation, 39

addresses, position data, specifying, 51

allocations, words, ladder diagram, 92

automatic mode, 9
  operation, 57

axes, 8
  individual control, 17
  number of controlled axes, 16
  number of simultaneously controlled axes, 16

B

backlash compensation, 18, 45

backup, 84
  flash memory
    parameters, 84
    programs, 91

blocks, 8
  numbers, G language, 48

C

configurations
  data, 7
  system, 6

connections, 65
  peripheral bus, 65
  personal computer, 65
  servodriver
    control cables, 72
    encoder cables, 73
    power cables, 73
  Teaching Box, 68

connectors, I/O
  terminals, 71
  wiring, 70

controllers, list, 55

controls
  CP, 36
  PTP, 36, 37
  triangular, 38

coordinate systems
  reference, 3
  workpiece, 3

CP control, 36
  override, 45

cycle run, executing, Teaching Box, 101

D

DC relay, 4

dimensions, C200H-MC221, 15

directory names, 87

E

emergency stop circuit, 27

encoders, 17
  control method, 16

equipment, testing, 55

Error Counter Alarm Bit, 26, 27

errors
  clearing, Teaching Box, 100
  counter capacity setting, 26
  counter overflow check, 26
  positioning, 26
  resetting, Teaching Box, 100
  servodriver, Teaching Box, 100

F—G

failsafe circuits, 26

feed override
  interpolation, 17
  jog, 17
  rapid, 17

feed speeds
  interpolation, 17
  maximum high-speed rate, 78
  maximum interpolation feed rate, 79
  maximum jog feed rate, 80
  rapid, 17

feedback pulses, 2, 5

filenames, 87

flash memory, 84
  backup
    parameters, 84
    programs, 91

forward rotation, 2

G language, 12
  automatic mode, 9
  example program, 48
  list of codes, 50
  list of symbols, 51

I–L

I/O words, 16

in-position value, 80

interface area, 7
  definition, 58

internal operations, 20

interpolation
  circular, 16, 40
    acceleration/deceleration times, 40
    triangular control, 40
  feed override, 17
  feed speed, 17
  linear, 16, 38
    acceleration/deceleration times, 39
    triangular control, 39

interrupt inching, 13, 16, 36, 41

jog operation, executing, Teaching Box, 101

line driver output, 5

loaders/unloaders, 3

M

manual mode, 9
  operation, 57

Manual Pulse Generator. *See* MPG

maximum position command values, 16

MC Support Software, 32, 56
  checking, 94
    jog operation, 96
    MC monitoring, 95
    MC program operation, 96
    origin search, 96
    power supply, 95
    servo-lock, 95
  display unit, 16, 76
  list of functions, 34
  parameters, setting, 75

mechanical system, 3-axis, 56

monitoring, MC, 95

mounting
  positions, 64
  Units, 64

MPG, 13, 31

O

origin search
  checking, 96
  executing for all axes, Teaching Box, 99
  high speed, 79
  low speed, 79

overrides, feed rate
  CP control, 45
  PTP control, 44

P

palletizers/depalletizers, 3

parameters
  input, G language, 48
  list, 17
  saving, 81
  setting, 74
    display unit, 76
    in-position value, 80
    maximum high-speed feed rate, 78
    maximum interpolation feed rate, 79
    maximum jog feed rate, 80
    minimum unit, 76
    origin search high speed, 79
    origin search low speed, 79
    positive/negative software limits, 77
    pulse rate, 76
    reference origin offset, 78
    selection of MC model, 75
    workpiece origin offset value, 78
  transferring, 82

pass mode, 43, 44

PCs
  manual mode, 9
  startup, 74

peripheral bus, 65

peripheral devices, 16, 17, 32
  MC Support Software, 32
  Teaching Box, 32

personal computer, 65

position data, 7

positioning, explanation, 56

positive/negative software limits, 77

power supply, 95

precautions, general, xi

Programmable Controllers. *See* PCs

programs, 8
  G language, 48
    format, 49
  ladder diagram
    creating, 92
    program notation, 92
  MC
    creating, 85
    saving, 87
    transferring, 89
  numbers, G language, 48

PTP control, 37
  override, 44

pulse rates, 76

R

reference coordinate systems, 3

reference origin offset, 78

registers, 7
  specifying, 51

reverse rotation, 2

robots
  cylindrical, 4
  horizontal articulated, 4
  orthogonal, 4

rotation
  forward, 2
  reverse, 2

runaway
  due to disconnected wiring, 24
  due to faulty wiring, 23

S

S curves, 12, 42

semi-closed loop system, 20

servo system, semi-closed loop, 20

servo-lock
  checking, 95
  executing, Teaching Box, 99

servodrivers, 16
  connections, 72
  relationships, 17

servomotors, 2
  controller, 56
  runaway, 23
  wiring precautions, 23

single-block run, executing, Teaching Box, 102

solenoid, 4

specifications
  general, 14
  switch box, 57

startup, procedures, 54

stop mode, 42, 43

surge absorber, wiring, 4

surge-absorbing diode, wiring, 4

switch box, 57
  wiring, 73

SYSMAC Support Software, 32, 55

system parameters, 7

T

T. BOX RESERVED, changing, Teaching Box, 98

tasks, 8

Teaching Box, 32
  changing, T.BOX RESERVED mode, 98
  checking, 98
  checking error counter, 26
  clearing, errors, 100
  connections, 68
  executing
    cycle run, 101
    jog operation, 101
    origin search for all axes, 99
    servo-lock, 99
    single-block run, 102
  list of functions, 33
  manual mode, 9
  resetting
    MC Unit errors, 100
    servodriver errors, 100

testing, equipment, 55

trapezoidal curves, 42

triangular control, 38
  circular interpolation, 40
  linear interpolation, 39

U—W

units, measurement, 16
  display, 76
  minimum settings, 16, 76

wiring
  check function, 25
  I/O connectors, 70
  precautions, 4
  switch box to Input Unit, 73

workpieces
  coordinate systems, 3
  origin offset value, 78

Revision History

A manual revision code appears as a suffix to the catalog number on the front cover of the manual.

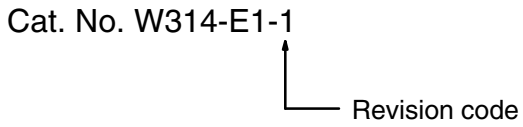

The following table outlines the changes made to the manual during each revision. Page numbers refer to the previous version.

Revision code	Date	Revised content
1	June 1996	Original production

OMRON Corporation
Systems Components Division
14F Nissei Bldg.
1-6-3, Osaki, Shinagawa-ku,
Tokyo 141 Japan
Tel: (03)3779-9038/Fax: (03)3779-9041

Regional Headquarters

OMRON EUROPE B.V.
Wegalaan 67-69, NL-2132 JD Hoofddorp
The Netherlands
Tel: (31)2356-81-300/Fax: (31)2356-81-388

OMRON ELECTRONICS, INC.
1 East Commerce Drive, Schaumburg, IL 60173
U.S.A.
Tel: (847)843-7900/Fax: (847)843-8568

OMRON ASIAPACIFIC PTE. LTD.
510 Thomson Road #13-03
SLF Bldg.
1129 Singapore
Tel: (65)353-2611/Fax: (65)353-5391

OMRON

Authorized Distributor:

Cat. No. W314-E1-1

Note: Specifications subject to change without notice.

Printed in Japan
0696–1M

Read and Understand this Manual

Please read and understand this manual before using the product. Please consult your OMRON representative if you have any questions or comments.

Warranty and Limitations of Liability

WARRANTY

OMRON's exclusive warranty is that the products are free from defects in materials and workmanship for a period of one year (or other period if specified) from date of sale by OMRON.

OMRON MAKES NO WARRANTY OR REPRESENTATION, EXPRESS OR IMPLIED, REGARDING NON-INFRINGEMENT, MERCHANTABILITY, OR FITNESS FOR PARTICULAR PURPOSE OF THE PRODUCTS. ANY BUYER OR USER ACKNOWLEDGES THAT THE BUYER OR USER ALONE HAS DETERMINED THAT THE PRODUCTS WILL SUITABLY MEET THE REQUIREMENTS OF THEIR INTENDED USE. OMRON DISCLAIMS ALL OTHER WARRANTIES, EXPRESS OR IMPLIED.

LIMITATIONS OF LIABILITY

OMRON SHALL NOT BE RESPONSIBLE FOR SPECIAL, INDIRECT, OR CONSEQUENTIAL DAMAGES, LOSS OF PROFITS OR COMMERCIAL LOSS IN ANY WAY CONNECTED WITH THE PRODUCTS, WHETHER SUCH CLAIM IS BASED ON CONTRACT, WARRANTY, NEGLIGENCE, OR STRICT LIABILITY.

In no event shall the responsibility of OMRON for any act exceed the individual price of the product on which liability is asserted.

IN NO EVENT SHALL OMRON BE RESPONSIBLE FOR WARRANTY, REPAIR, OR OTHER CLAIMS REGARDING THE PRODUCTS UNLESS OMRON'S ANALYSIS CONFIRMS THAT THE PRODUCTS WERE PROPERLY HANDLED, STORED, INSTALLED, AND MAINTAINED AND NOT SUBJECT TO CONTAMINATION, ABUSE, MISUSE, OR INAPPROPRIATE MODIFICATION OR REPAIR.

Application Considerations

SUITABILITY FOR USE

OMRON shall not be responsible for conformity with any standards, codes, or regulations that apply to the combination of products in the customer's application or use of the products.

At the customer's request, OMRON will provide applicable third party certification documents identifying ratings and limitations of use that apply to the products. This information by itself is not sufficient for a complete determination of the suitability of the products in combination with the end product, machine, system, or other application or use.

The following are some examples of applications for which particular attention must be given. This is not intended to be an exhaustive list of all possible uses of the products, nor is it intended to imply that the uses listed may be suitable for the products:

- Outdoor use, uses involving potential chemical contamination or electrical interference, or conditions or uses not described in this manual.
- Nuclear energy control systems, combustion systems, railroad systems, aviation systems, medical equipment, amusement machines, vehicles, safety equipment, and installations subject to separate industry or government regulations.
- Systems, machines, and equipment that could present a risk to life or property.

Please know and observe all prohibitions of use applicable to the products.

NEVER USE THE PRODUCTS FOR AN APPLICATION INVOLVING SERIOUS RISK TO LIFE OR PROPERTY WITHOUT ENSURING THAT THE SYSTEM AS A WHOLE HAS BEEN DESIGNED TO ADDRESS THE RISKS, AND THAT THE OMRON PRODUCTS ARE PROPERLY RATED AND INSTALLED FOR THE INTENDED USE WITHIN THE OVERALL EQUIPMENT OR SYSTEM.

PROGRAMMABLE PRODUCTS

OMRON shall not be responsible for the user's programming of a programmable product, or any consequence thereof.

Disclaimers

CHANGE IN SPECIFICATIONS

Product specifications and accessories may be changed at any time based on improvements and other reasons.

It is our practice to change model numbers when published ratings or features are changed, or when significant construction changes are made. However, some specifications of the products may be changed without any notice. When in doubt, special model numbers may be assigned to fix or establish key specifications for your application on your request. Please consult with your OMRON representative at any time to confirm actual specifications of purchased products.

DIMENSIONS AND WEIGHTS

Dimensions and weights are nominal and are not to be used for manufacturing purposes, even when tolerances are shown.

PERFORMANCE DATA

Performance data given in this manual is provided as a guide for the user in determining suitability and does not constitute a warranty. It may represent the result of OMRON's test conditions, and the users must correlate it to actual application requirements. Actual performance is subject to the OMRON Warranty and Limitations of Liability.

ERRORS AND OMISSIONS

The information in this manual has been carefully checked and is believed to be accurate; however, no responsibility is assumed for clerical, typographical, or proofreading errors, or omissions.