Cat. No. I538-E1-01

生産終了
DISCONTINUED

OMRON

USER'S MANUAL

OMNUC W SERIES

Model R88A-NCW152-DRT

DeviceNet Option Unit

Thank you for choosing this OMNUC W-series DeviceNet Option Unit. Proper use and handling of the product will ensure proper product performance, will length product life, and may prevent possible accidents.
Please read this manual thoroughly and handle and operate the product with care.

General Instructions

1. This manual describes the functions of the product and relations with other products. You should assume that anything not described in this manual is not possible.
2. Although care has been given in documenting the product, please contact your OMRON representative if you have any suggestions on improving this manual.
3. The product contains dangerous high voltages inside. Turn OFF the power and wait for at least five minutes to allow power to discharge before handling or working with the product. Never attempt to disassemble the product.
4. We recommend that you add the following precautions to any instruction manuals you prepare for the system into which the product is being installed.
   - Precautions on the dangers of high-voltage equipment.
   - Precautions on touching the terminals of the product even after power has been turned OFF. (These terminals are live even with the power turned OFF.)
5. Specifications and functions may be changed without notice in order to improve product performance.
6. Positive and negative rotation of AC Servomotors described in this manual are defined as looking at the end of the output shaft of the motor as follows: counterclockwise rotation is positive and clockwise rotation is negative.
7. Do not perform withstand-voltage or other megameter tests on the product. Doing so may damage internal components.
8. Servomotors and Servo Drivers have a finite service life. Be sure to keep replacement products on hand and to consider the operating environment and other conditions affecting the service life.
9. The OMNUC W Series can control both incremental and absolute encoders. Differences in functions or specifications according to the encoder type are indicated in this manual. Be sure to check the model that is being used, and follow the relevant specifications.
   - Servomotors with incremental encoders: R88M-W□H-□/-W□L-□
   - Servomotors with absolute encoders: R88M-W□T-□/-W□S-□

Notice

Before using the product under the following conditions, consult your OMRON representatives, make sure that the ratings and performance characteristics of the product are good enough for the systems, machines, or equipment, and be sure to provide the systems, machines, or equipment with double safety mechanisms.

1. Conditions not described in the manual.
2. The application of the product to nuclear control systems, railroad systems, aviation systems, vehicles, combustion systems, medical equipment, amusement machines, or safety equipment.
3. The application of the product to systems, machines, or equipment that may have a serious influence on human life and property if they are used improperly.

Items to Check After Unpacking

Check the following items after removing the product from the package:

- Has the correct product been delivered (i.e., the correct model number and specifications)?
- Has the product been damaged in shipping?
- Are any screws or bolts loose?

The following are included with the DeviceNet Unit.

Safety Precautions	1
Communications Connector (From Phoenix Contact: MSTB 2.5/5–STF–5.08AUM)	1
Ground screws (pan head; M3 x 10, M4 x 8, and M4 x 10)*	3

* The ground screws that are used depend on the model of the Servo Driver to which the DeviceNet Unit is mounted.

OMRON

USER'S MANUAL

OMNUC W SERIES

Model R88A-NCW152-DRT

DeviceNet Option Unit

Notice:

OMRON products are manufactured for use according to proper procedures by a qualified operator and only for the purposes described in this manual.

The following conventions are used to indicate and classify precautions in this manual. Always heed the information provided with them. Failure to heed precautions can result in injury to people or damage to property.

⚠DANGER Indicates an imminently hazardous situation which, if not avoided, will result in death or serious injury.

⚠WARNING Indicates a potentially hazardous situation which, if not avoided, could result in death or serious injury.

⚠Caution Indicates a potentially hazardous situation which, if not avoided, may result in minor or moderate injury, or property damage.

OMRON Product References

All OMRON products are capitalized in this manual. The word “Unit” is also capitalized when it refers to an OMRON product, regardless of whether or not it appears in the proper name of the product.

The abbreviation “Ch,” which appears in some displays and on some OMRON products, often means “word” and is abbreviated “Wd” in documentation in this sense.

The abbreviation “PC” means Programmable Controller and is not used as an abbreviation for anything else.

Visual Aids

The following headings appear in the left column of the manual to help you locate different types of information.

Note Indicates information of particular interest for efficient and convenient operation of the product.

©OMRON, 2001

All rights reserved. No part of this publication may be reproduced, stored in a retrieval system, or transmitted, in any form, or by any means, mechanical, electronic, photocopying, recording, or otherwise, without the prior written permission of OMRON.

No patent liability is assumed with respect to the use of the information contained herein. Moreover, because OMRON is constantly striving to improve its high–quality products, the information contained in this manual is subject to change without notice. Every precaution has been taken in the preparation of this manual. Nevertheless, OMRON assumes no responsibility for deviations or omissions. Neither is any liability assumed for damages resulting from the use of the information contained in this publication.

General Warnings

Observe the following warnings when using the DeviceNet Unit and all peripheral devices.

This manual may include illustrations of the product with protective covers removed in order to describe the components of the product in detail. Make sure that these protective covers are on the product before use.

Consult your OMRON representative when using the product after a long period of storage.

⚠ WARNING Always connect the frame ground terminals of the Servo Driver and the Servomotor to a class–3 ground (to 100 Ω or less). Not connecting to a class-3 ground may result in electric shock.

⚠ WARNING Do not touch the inside of the Servo Driver. Doing so may result in electric shock.

⚠ WARNING Do not remove the front cover, terminal covers, cables, Parameter Units, or optional items while the power is being supplied. Doing so may result in electric shock.

⚠ WARNING Installation, operation, maintenance, or inspection must be performed by authorized personnel. Not doing so may result in electric shock or injury.

⚠ WARNING Wiring or inspection must not be performed for at least five minutes after turning OFF the power supply. Doing so may result in electric shock.

⚠ WARNING Do not damage, press, or put excessive stress or heavy objects on the cables. Doing so may result in electric shock, stopping operation of the product, or burning.

⚠ WARNING Do not touch the rotating parts of the Servomotor in operation. Doing so may result in injury.

⚠ WARNING Do not modify the product. Doing so may result in injury or damage to the product.

⚠ Caution Use the Servomotors and Servo Drivers in a specified combination. Using them incorrectly may result in fire or damage to the product.

⚠ Caution Do not store or install the product in the following places. Doing so may result in fire, electric shock, or damage to the product.

- DeviceNet is a registered trademark of the ODVA (Open DeviceNet Vendors Association, Inc.).
- Locations subject to direct sunlight.
- Locations subject to temperatures or humidity outside the range specified in the specifications.
- Locations subject to condensation as the result of severe changes in temperature.
- Locations subject to corrosive or flammable gases.
- Locations subject to dust (especially iron dust) or salts.
- Locations subject to shock or vibration.
- Locations subject to exposure to water, oil, or chemicals.

⚠ Caution Do not touch the Servo Driver radiator, Regeneration Resistor, or Servomotor while the power is being supplied or soon after the power is turned OFF. Doing so may result in a skin burn due to the hot surface.

Storage and Transportation Precautions

⚠ Caution Do not hold the product by the cables or motor shaft while transporting it. Doing so may result in injury or malfunction.

⚠ Caution Do not place any load exceeding the figure indicated on the product. Doing so may result in injury or malfunction.

⚠ Caution Use the motor eye–bolts only for transporting the Motor. Using them for transporting the machinery may result in injury or malfunction.

Installation and Wiring Precautions

⚠ Caution Do not step on or place a heavy object on the product. Doing so may result in injury.

⚠ Caution Do not cover the inlet or outlet ports and prevent any foreign objects from entering the product. Doing so may result in fire.

⚠ Caution Be sure to install the product in the correct direction. Not doing so may result in malfunction.

⚠ Caution Provide the specified clearances between the Servo Driver and the control panel or with other devices. Not doing so may result in fire or malfunction.

⚠ Caution Do not apply any strong impact. Doing so may result in malfunction.

⚠ Caution Be sure to wire correctly and securely. Not doing so may result in motor runaway, injury, or malfunction.

⚠ Caution Be sure to install the Unit correctly and securely. Not doing so may result in motor runaway, injury, or malfunction.

⚠ Caution Be sure that all the mounting screws, terminal screws, and cable connector screws are tightened to the torque specified in the relevant manuals. Incorrect tightening torque may result in malfunction.

⚠ Caution Use crimp terminals for wiring. Do not connect bare stranded wires directly to terminals. Connection of bare stranded wires may result in fire.

⚠ Caution Always use the power supply voltage specified in the User's Manual. An incorrect voltage may result in burning.

⚠ Caution Take appropriate measures to ensure that the specified power with the rated voltage and frequency is supplied. Be particularly careful in places where the power supply is unstable. An incorrect power supply may result in damage to the product.

⚠ Caution Install external breakers and take other safety measures against short–circuiting in external wiring. Insufficient safety measures against short–circuiting may result in fire.

⚠ Caution Provide an appropriate stopping device on the machine side to secure safety. (A holding brake is not a stopping device for securing safety.) Not doing so may result in injury.

⚠ Caution Provide an external emergency stopping device that allows an instantaneous stop of operation and power interruption. Not doing so may result in injury.

⚠ **Caution** Take appropriate and sufficient countermeasures when installing systems in the following locations. Not doing so may result in damage to the product.

- Locations subject to static electricity or other forms of noise.
- Locations subject to strong electromagnetic fields and magnetic fields.
- Locations subject to possible exposure to radioactivity.
- Locations close to power supplies.

⚠ **Caution** Do not reverse the polarity of the battery when connecting it. Reversing the polarity may damage the battery or cause it to explode.

⚠ **Caution** Before touching a Unit, be sure to first touch a grounded metallic object in order to discharge any static build–up. Not doing so may result in malfunction or damage.

Operation and Adjustment Precautions

⚠ **Caution** Confirm that no adverse effects will occur in the system before performing the test operation. Not doing so may result in damage to the product.

⚠ **Caution** Check the newly set parameters and switches for proper execution before actually running them. Not doing so may result in damage to the product.

⚠ **Caution** Do not make any extreme adjustments or setting changes. Doing so may result in unstable operation and injury.

⚠ **Caution** Separate the Servomotor from the machine, check for proper operation, and then connect to the machine. Not doing so may cause injury.

⚠ **Caution** When an alarm occurs, remove the cause, reset the alarm after confirming safety, and then resume operation. Not doing so may result in injury.

⚠ **Caution** Do not come close to the machine immediately after resetting momentary power interruption to avoid an unexpected restart. (Take appropriate measures to secure safety against an unexpected restart.) Doing so may result in injury.

⚠ **Caution** Do not use the built–in brake of the Servomotor for ordinary braking. Doing so may result in malfunction.

⚠ **Caution** When using the DeviceNet Unit in a Programmable Controller system, execute online edit only after confirming that no adverse effects will be caused by extending the cycle time. Otherwise, the input signals may not be readable.

⚠ **Caution** When using the DeviceNet Unit in a Programmable Controller system, confirm safety at the destination node before transferring parameters or other data to another node or changing output signals. Doing either of these without confirming safety may result in injury.

⚠ **Caution** Confirm that no adverse effect will occur in the system before attempting any of the following. Not doing so may result in an unexpected operation or damage to the product.

- Changing the present values or set values.
- Changing the parameters.

⚠ **Caution** Do not turn OFF the power supply to the Unit while data is being transferred. Doing so may result in malfunction or damage to the product.

Maintenance and Inspection Precautions

⚠ WARNING Do not attempt to disassemble, repair, or modify any Units. Any attempt to do so may result in malfunction, fire, electric shock, or injury.

⚠ Caution Resume operation only after transferring to the new Unit the contents of the data required for operation. Not doing so may result in an unexpected operation or damage to the product.

Overview

■ About this Manual

This manual provides the following information for the OMNUC W-series R88M-W□, R88D-WT□ AC Servomotors/Servo Drivers with an R88A-NCW152-DRT DeviceNet Option Unit (hereinafter called the DeviceNet Unit) mounted.

- Procedures for installing and wiring the DeviceNet Unit
- Specifications and methods for DeviceNet communications
- Procedures for setting user parameters
- Information on the Setup Tool
- Troubleshooting procedures

Related Manuals

■ Refer to the following manuals as required.

■ Read this manual carefully to ensure the proper use of W-series Servo Driver. Also, keep this manual in a safe place so that it can be referred to whenever necessary.

Manual Name	Manual No.	Contents
OMNUC W-series AC Servomotors/Servo Drivers User's Manual	I531-E1-□	Provides the detailed information on models and functions of OMNUC W-Series Servo Drivers.
DeviceNet User's Manual	W267-E1-□	Provides the overview of DeviceNet and installation.

Registered Trademark

DeviceNet is a registered trademark of the ODVA (Open DeviceNet Vendor Association, Inc.).

Contents

1 Features and System Configuration

1.1 Features - 1-2

1.2 System Configuration - 1-4

1.3 Basic Functions and Function Outlines - - - - - - - - - - - - - - - - - - 1-5

1.4 Specifications- 1-6

1.4.1 General Specifications - 1-6

1.4.2 Performance Specifications - 1-7

1.4.3 I/O Specifications - 1-7

1.4.4 DeviceNet Communications Specifications - 1-8

2 Outline Drawings and Nomenclature

2.1 Outline Drawings - 2-2

2.2 Checking Products on Delivery - 2-4

2.3 Product Nomenclature - 2-5

2.4 Mounting the DeviceNet Unit - 2-6

3 Installation

3.1 Storage Conditions - 3-2

3.2 Installation Site- 3-2

3.3 Orientation- 3-3

3.4 Installation - 3-4

4 Connectors

4.1 Connecting to Peripheral Devices - 4-2

4.1.1 Single-phase (100 V or 200 V) Main Circuit Specifications - - - - - - - - - 4-3

4.1.2 Three-phase, 200-V Main Circuit Specifications- - - - - - - - - - - - - - - - - 4-4

4.1.3 Three-phase, 400-V Main Circuit Specifications- - - - - - - - - - - - - - - - - 4-5

4.2 Internal Block Diagrams - 4-6

4.3 Servo Driver I/O Signals - 4-7

4.3.1 Connection Example of I/O Signal Connector (CN1) - - - - - - - - - - - - - 4-7

4.3.2 I/O Signals Connector (CN1) - 4-8

4.3.3 I/O Signal Names and Functions - 4-9

4.3.4 Interface Circuits - 4-10

4.4 I/O Signal Connections for DeviceNet Units (CN4)- - - - - - 4-12

4.4.1 CN4 Connection Example - 4-12

4.4.2 Connection Terminal Layout - 4-12

4.4.3 I/O Signal Interface Circuits - 4-13

4.4.4 Fully-closed Encoder Connection Example - 4-14

4.5 Connection and Wiring of the DeviceNet Communications Connector - - - - - - - - - - - 4-15
4.5.1 Connector Specifications - 4-15
4.5.2 DeviceNet Communications Connection Example- - - - - - - - - - - - - - 4-17
4.5.3 DeviceNet Network Configuration Restrictions - - - - - - - - - - - - - - - - 4-19

5 Parameter Settings

5.1 Parameters - 5-2
5.1.1 Outline of Parameters - 5-2
5.1.2 Parameter Types - 5-2
5.1.3 Editing Parameters - 5-3
5.1.4 Effective Timing - 5-3

5.2 Parameter Tables - 5-4
5.2.1 Unit Parameters- 5-4
5.2.2 Origin Search Parameters - 5-4
5.2.3 Machine System and Peripheral Device Parameters - - - - - - - - - - - - - 5-5
5.2.4 Speed, Acceleration, and Deceleration Parameters- - - - - - - - - - - - - - 5-6
5.2.5 Positioning Parameters - 5-7
5.2.6 Multi-speed Positioning Parameters- 5-7
5.2.7 Notch Output Parameters - 5-9
5.2.8 Point Table Parameter - 5-9

5.3 Parameter Details - 5-10
5.3.1 Unit Parameters- 5-10
5.3.2 Origin Search Parameters - 5-13
5.3.3 Machine System and Peripheral Devices - - - - - - - - - - - - - - - - - - - 5-22
5.3.4 Speed, Acceleration, and Deceleration - 5-26
5.3.5 Positioning - 5-39
5.3.6 Point Table - 5-41
5.3.7 Multi-speed Positioning - 5-41
5.3.8 Notch Signal Output Positioning - 5-42

6 DeviceNet Communications

6.1 Control Configuration - 6-3

6.2 DeviceNet Switch Settings and Display - - - - - - - - - - - - - - - 6-4
6.2.1 Rotary Switch Settings for Setting Node Address - - - - - - - - - - - - - - 6-4
6.2.2 Rotary Switch Settings for Setting Baud Rate - - - - - - - - - - - - - - - - - 6-5
6.2.3 LED Indicators- 6-5

6.3 Precautions for Communications Line Design - - - - - - - - - - - 6-6
6.3.1 Providing the Communications Power Supply- - - - - - - - - - - - - - - - - 6-6
6.3.2 Communications Line Noise Precautions - - - - - - - - - - - - - - - - - - - 6-16

6.4 Overview of Remote I/O and Explicit Message Communications - - - - - - - - - - - - - - - - - 6-20
6.4.1 Remote I/O Communications - 6-20
6.4.2 Explicit Message Communications - 6-20

6.5 Remote I/O Communications- 6-21
6.5.1 Basic Block - 6-21
6.5.2 General Command Bits and Status - 6-22
6.5.3 Move Commands for Remote I/O Communications - - - - - - - - - - - - - 6-26
6.5.4 Set/Read Commands for Remote I/O Communications - - - - - - - - - - 6-34

6.6 Details on Move Commands for Remote I/O Communications - 6-42
6.6.1 No-operation (Command Code: 0000, 0 Hex) - - - - - - - - - - - - - - - - 6-42
6.6.2 Operation - 6-52
6.7 Command Method Using the Remote I/O Communications - 6-60
6.7.1 Basic Operation - 6-60
6.7.2 Command Method - 6-60
6.8 Communications Using Explicit Messages - - - - - - - - - - - - 6-65
6.8.1 Explicit Messages Overview - 6-65
6.8.2 Command/Response Blocks - 6-66
6.8.3 Sending Explicit Messages Using the CMND Instruction - - - - - - - - - 6-68
6.9 Tracing Data - 6-71
6.9.1 Trace Parameters - 6-71
6.9.2 Reading Trace Data - 6-74
6.9.3 Tracing Data - 6-77
6.10 Changing Parameters - 6-78
6.10.1 Managing DeviceNet Data - 6-78
6.10.2 Changing Parameters - 6-79

7 Ladder Programming Examples

7.1 Programming Conditions - 7-2
7.2 Remote I/O Programming - 7-3
7.2.1 Servo ON Command - 7-3
7.2.2 Origin Search Command - 7-4
7.2.3 Direct Operation Command - 7-5
7.2.4 Parameter Read Command - 7-7
7.3 Programming Explicit Messages - 7-8

8 Servo Driver Settings

8.1 Setting Up the Servo Driver When the DeviceNet Unit is Mounted - 8-2
8.1.1 Parameters - 8-2
8.1.2 Automatically Set Parameters - 8-3
8.1.3 Standard Settings for I/O Signals - 8-4
8.1.4 Analog Monitors - 8-7
8.2 Settings According to Equipment Characteristics - - - - - - - - - 8-8
8.2.1 Switching Servomotor Rotation Direction - 8-8
8.2.2 Stop Mode Selection at Servo OFF - 8-9
8.2.3 Fully-closed Control - 8-10
8.3 Settings According to Host Controller - - - - - - - - - - - - - - - - - 8-13
8.3.1 Sequence I/O Signals - 8-13
8.4 Setting Stop Functions - 8-15
8.4.1 Using the Dynamic Brake - 8-15
8.4.2 Using the Holding Brake - 8-16

8.5 Absolute Encoders - 8-20
8.5.1 Selecting an Absolute Encoder - 8-20
8.5.2 Absolute Encoder Setup (Initialization)- 8-21
8.5.3 Absolute Encoder Multi-turn Limit Setting- 8-21
8.6 Parameter Unit- 8-23

9 Troubleshooting
9.1 Alarm Display Table - 9-2
9.2 Warning Display Table - 9-5
9.3 Troubleshooting with Alarm Displays - - - - - - - - - - - - - - - - - - - 9-6
9.4 Error Diagnosis Due To Operating Status - - - - - - - - - - - - - - 9-44

10 Appendix
10.1 DeviceNet Object Model - 10-2
10.2 DeviceNet Attributes - 10-3
10.2.1 Identity Object (0x01) - 10-3
10.2.2 Message Router Object (0x02) - 10-4
10.2.3 DeviceNet Object (0x03)- 10-5
10.2.4 Assembly Object (0x04) - 10-6
10.2.5 Connection Object (0x05) - 10-7
10.2.6 DeviceNet Unit Parameter Object (0x64) - - - - - - - - - - - - - - - - - - - 10-9
10.2.7 Point Table Object (0x65) - 10-15
10.2.8 Servo Driver Parameter Object (0x66) - 10-20
10.2.9 Trace Setting Object (0x67)- 10-25
10.2.10 Trace Data Object (0x68) - 10-27
10.3 Alarm/Warning Codes and Error Codes for
Message Communications - 10-28
10.3.1 Alarm Codes - 10-28
10.3.2 Warning Codes - 10-31
10.3.3 Error Codes for Message Communications- - - - - - - - - - - - - - - - - 10-32

INDEX

1

Features and System Configuration

This chapter describes the basic functions and performance of the DeviceNet Unit.

1.1 Features - 1-2
1.2 System Configuration - 1-4
1.3 Basic Functions and Function Outlines - - - - - - - - - - - - - - - - 1-5
1.4 Specifications - 1-6
1.4.1 General Specifications - 1-6
1.4.2 Performance Specifications - 1-7
1.4.3 I/O Specifications - 1-7
1.4.4 DeviceNet Communications Specifications - 1-8

1.1 Features

The R88A-NCW152-DRT DeviceNet Unit can be mounted to an OMNUC W-series Servo Driver to treat the Servo Driver as a slave in a DeviceNet network, enabling application of the W-series Servo Drivers as network drivers. Commands received via DeviceNet communications are output to the Servo Driver. Position commands can be output via a connector to the Servo Driver to enable positioning without using a positioner.

■ DeviceNet Compatibility

The DeviceNet is an open field network. Mounting a DeviceNet Unit to a W-series Servo Driver (software version 14 or later) enables constructing a network that includes many different types of slave.

The DeviceNet supports two kinds of communications: Remote I/O communications and Explicit Message communications. An OMRON DeviceNet Configurator (version 2.2 or later) can be used to easily set or change parameters via the DeviceNet.

The use of EDS files on the DeviceNet network enables application of slaves from different vendors without restrictions in a multivendor network. The EDS files contain device ID information, device parameters, operating information, and other information required to define the devices.

■ Tracing

Tracing allows the access of collected operating data and I/O information via the DeviceNet at a specified sampling cycle. Tracing is implemented from a PLC or personal computer using Explicit Messages to start tracing or read trace data. Tracing thus enables confirming specified Servo Driver operating status to predict failures in the servo system or troubleshoot failures that have occurred.

■ Setting Linear and Rotary Axes

The DeviceNet Unit can be set for application as a linear axis or as a rotary axis.

■ Reading Monitor Status

Remote I/O communications can be used to read the signal I/O status or internal information displayed by the Servo Driver in Monitor Mode to a PLC. This information provides information on the operating status of the Servo Driver.

■ Absolute Encoders

OMRON motors with absolute encoders are also supported. Once the origin has been set after startup, no further origin search operations are required.

■ Setup Tool

A personal computer-based Setup Tool for the DeviceNet Unit enables setting, changing, and monitoring Servo Driver and DeviceNet Unit parameters. A special cable (R88A-CCW002P4) to connect to the personal computer is connected to the CN11 connector on the front of the DeviceNet Unit.

The Setup Tool is provided on the *Setup Tool Software* (SBCE-001).

1

1.2 System Configuration

The DeviceNet Unit provides the following system configuration.

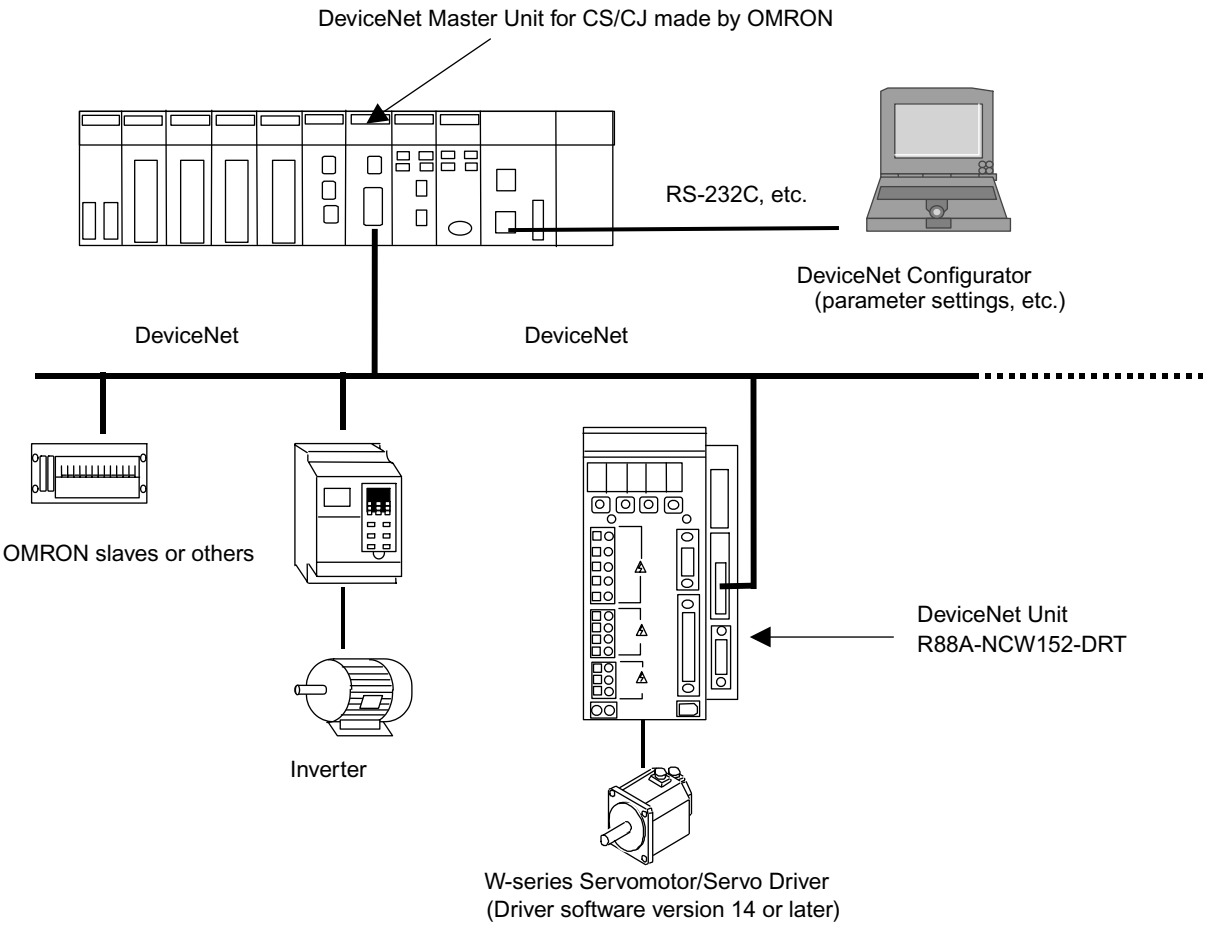

1.3 Basic Functions and Function Outlines

The DeviceNet Unit provides the following functions.

	Function		Outline
Move commands	No-operation	JOG Command	Moves the axis in the specified direction at the specified speed.
		Step Command	Moves the axis the specified amount in the specified direction.
		Station Command	This command can be used when the DeviceNet Unit is being used as a rotary axis. One rotation of the motor is divided into the specified number of stations and the axis is positioned at the specified station.
		Point Table Command	Moves the axis to a target position specified in the point table at the target speed.
		Origin Search Command	Determines the origin using the specified origin search mode.
	Operation	Direct Operation Command	Moves the axis to the specified target position.
		Interrupt Feeding Command	Move the axis the specified amount when a change occurs in the external signal status during axis movement.
		Notch Output Positioning Command	Outputs a notch signal when the specified position is passed during axis movement.
		Multi-speed Positioning Command	Changes the speed in stages and moves the axis to the specified position.
Setting/reading commands	Parameter Read Command		Reads user parameters from the Servo Driver and DeviceNet Unit.
	Parameter Write Command		Writes user parameters to the Servo Driver and DeviceNet Unit.
	Present Position Setting Command		Resets the present position of the motor to a specified position.
	Origin Setting Command		When using an absolute encoder, sets the present position of the motor as the origin.
	Alarm Read Command		Reads up to the most recent three alarms that have occurred in the Servo Driver or DeviceNet Unit.
	Monitor Mode Read Command		Reads the monitor mode (Unxxx) displayed on the Servo Driver.
	Unit Reset Command		Saves the user parameters in the DeviceNet Unit to flash ROM and then restarts the Servo Driver and DeviceNet Unit software.
Other functions	Tracing		Reads accumulated trace data using Explicit Messages from a PC or personal computer.
	Backlash compensation		Compensates for play in the mechanical system.
	Deceleration stop		Decelerates the axis to a stop using a Cancel or Hold Command during axis movement.
	Absolute encoder support		An OMNUC W-series Servomotor with an absolute encoder can be used. Using an absolute encoder eliminates the need for origin searches, reducing system startup time.
	Software limits		Positioning positions can be monitored in the software separately from limit input signals to prevent or reduce damage to external devices resulting from unexpected positioning operations caused by operating errors.
	Linear axis/rotary axis setting		The DeviceNet Unit can be set for application as a linear axis or as a rotary axis.

1.4 Specifications

This section shows the ratings and specifications of DeviceNet Unit.

1.4.1 General Specifications

The DeviceNet Unit provides the following general specifications.

Item		Details
Applicable Servo Driver		R88D-WT□ (software version 14 or later)*
Installation Method		Mounted on the CN10 connector on the Servo Driver side
Basic Specifications	Power Supply Method	Supplied from the control power supply of the Servo Driver.
	Power Consumption	1.3 W
	External Dimensions [mm]	20 × 142 × 128 (W × H × D)
	Approx. Mass [kg] (lb)	0.2 (0.441)
	Current Consumption	250 mA
Environment	Ambient Operating Temperature	0 to 55 °C
	Ambient Operating Humidity	90 % RH or less (non-condensing)
	Ambient Atmosphere	Free from corrosive gasses
	Ambient Storage Temperature	-20 to 85 °C
	Ambient Storage Humidity	90 %RH or less (non-condensing)
	Vibration Resistance	4.9 m/s^2
	Impact Resistance	Acceleration 19.6 m/s^2 or less (when the impact is applied three times in each X, Y, and Z direction)

* A DeviceNet Unit cannnot be used with software version 8.

1.4.2 Performance Specifications

The DeviceNet Unit provides the following performance specifications.

Item		Specifications
Model Number		R88A-NCW152-DRT
Number of Controlled Axes		1 axis/Unit
Control Method		Fully-closed/semi-closed control
DeviceNet Communications	Communications Method	Conform to DeviceNet: Remote I/O and Explicit Messages
Command System	Operation Specifications	Positioning via DeviceNet communications
	Command Input	DeviceNet communications Commands: move commands (positions and speeds) Reading and writing user parameters
Position control functions	Acceleration/Decelera-tion Method	One-step linear, two-step linear, asymmetric, exponential, or S-curve
	Acceleration/Decelera-tion Times	1 to 10,000 ms (time to maximum speed)
	Fully-closed Control *1	Supported
	Software Limits	Supported
	Origin Searches	Search direction designation Applicable sensor designation Limit input reversal designation
	Backlash Compensation	0 to 32,767 steps
I/O Signals	CN1	Forward/reverse rotation drive prohibit, origin input signal*2
	CN4	Phase-A, phase-B, and phase-Z inputs; emergency stop input, notch output
Built-in Functions	Latch Function for Position Data	The following can be latched: Position data for phase Z, origin input signal, and interrupt input signal.
	Protective Functions	Protection is provided for the following: User parameter corruption, user parameter setting errors, communications errors, etc.
	LED Indicators	MS: Module status NS: Network status
Positioning Unit		Steps
Speed Unit		× 1,000 steps/min

* 1. A fully-closed encoder is required on the load to perform fully-closed control.
* 2. Input signals for the Servo Driver to which the DeviceNet Unit is mounted.

1.4.3 I/O Specifications

The DeviceNet Unit provides the following I/O specifications.

Item	Inputs	Outputs
Rated I/O Voltage	24 V DC ±1 V	30 V DC max.
Rated I/O Current	5 mA or more	50 mA max.
ON Response Time	2 ms or more	–
ON Voltage	Min.: +24 VIN-11	–
OFF Voltage	Max.: +24 VIN-1	–

1

1.4.4 DeviceNet Communications Specifications

The DeviceNet Unit provides the following DeviceNet communications specifications.

<table>
<tr><th>Item</th><th colspan="2">Specifications</th></tr>
<tr><td>Communications Protocol</td><td colspan="2">Conforms to DeviceNet</td></tr>
<tr><td>Supported Connections (Communications)</td><td colspan="2">Master-slave connections: Remote I/O and Explicit Messagee communications</td></tr>
<tr><td>Connection Methods</td><td colspan="2">Combination of multi-drop and T-branch connections (for trunk or drop lines)</td></tr>
<tr><td>Baud Rate</td><td colspan="2">Set on rotary switch (DR) to 125, 250, or 500 kbit/s.</td></tr>
<tr><td>Node Address Settings</td><td colspan="2">Set on rotary switches (×1 and ×10) to an address between 0 and 63.</td></tr>
<tr><td>Communications Media</td><td colspan="2">Special 5-wire cable (2 signal wires, 2 power supply wires, and 1 shield wire)</td></tr>
<tr><td>Communications Distance</td><td colspan="2">
<table>
<tr><th>Baud Rate (kbit/s)</th><th>Max. net-work length (m)</th><th>Max. drop line length (m)</th><th>Max. total drop line length (m)</th></tr>
<tr><td>500</td><td>100 (100)*</td><td>6</td><td>39</td></tr>
<tr><td>250</td><td>250 (100)*</td><td>6</td><td>78</td></tr>
<tr><td>125</td><td>500 (100)*</td><td>6</td><td>156</td></tr>
</table>
</td></tr>
<tr><td>Communications Power Supply</td><td colspan="2">11 to 25 V DC</td></tr>
<tr><td>Communications Power Supply Current Consumption</td><td colspan="2">20 mA max.</td></tr>
<tr><td>Maximum Number of Nodes</td><td colspan="2">64 (DeviceNet Configurator is counted as 1 node when connected.)</td></tr>
<tr><td>Maximum Number of Slaves</td><td colspan="2">63</td></tr>
<tr><td rowspan="3">Communications Cycle Time</td><td>DeviceNet processing time</td><td>1 ms or less to 4 ms</td></tr>
<tr><td>From DeviceNet Unit start command until command to Servo Driver</td><td>Min.: 8 ms
Max.: 16 ms</td></tr>
<tr><td>Explicit Message response time</td><td>Normal attributes: 1 ms or less to 4 ms
Reading/writing servo parameter: 28 ms max.</td></tr>
<tr><td>Error Control</td><td colspan="2">CRC errors</td></tr>
</table>

* Values in parentheses are for thin cable.

2

Outline Drawings and Nomenclature

2

This chapter describes the outline drawings of the DeviceNet Unit, cable, and connector and the procedure for checking the DeviceNet Unit upon delivery. It also describes the names of product parts and how to mount the DeviceNet Unit on the W-series Servo Driver.

2.1 Outline Drawings -2-2

2.2 Checking Products on Delivery -2-4

2.3 Product Nomenclature -2-5

2.4 Mounting the DeviceNet Unit -2-6

2

2.1 Outline Drawings

This section provides outline drawings of the DeviceNet Unit, Setup Tool Cable, and I/O signal connectors.

■ DeviceNet Unit

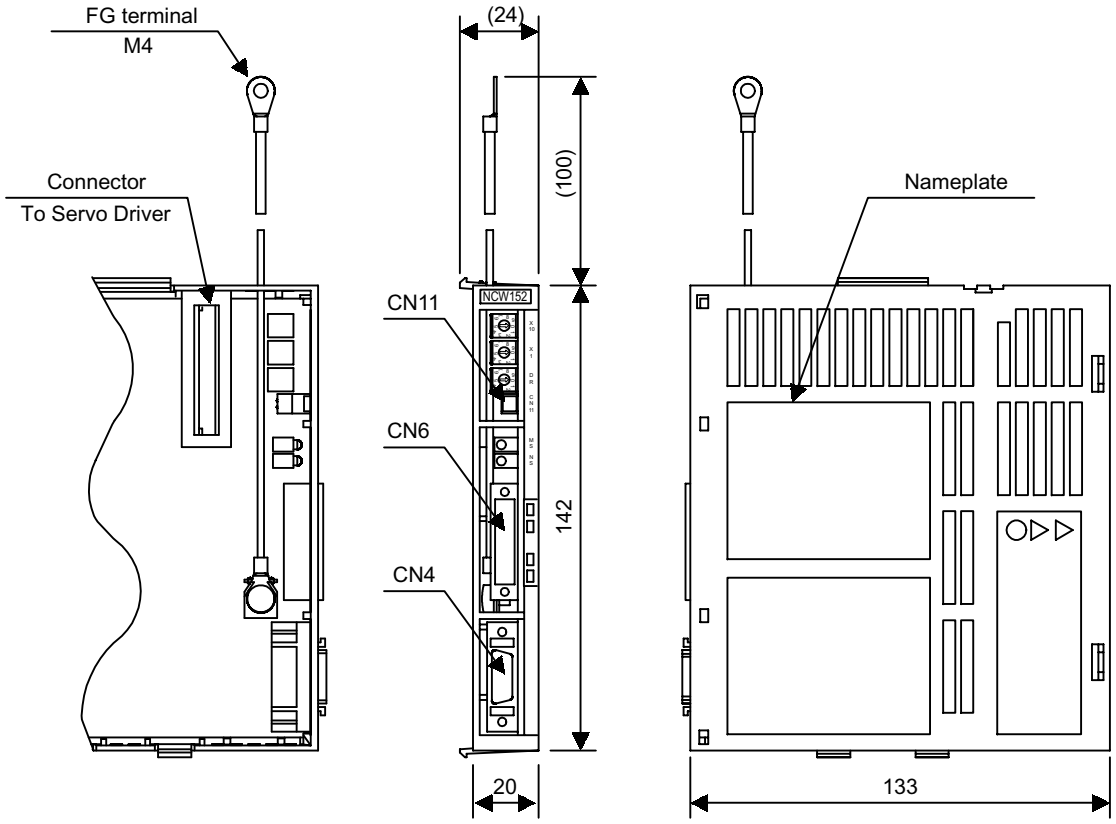

Approx. mass: 0.2 kg
Unit: mm

■ Setup Tool Cable (R88A-CCW002P4)

A Setup Tool Cable and the Setup Tool Software (SBCE-001) are required to set and monitor Servo Driver and DeviceNet Unit parameters from a personal computer.

Available Cable

Model Number	Length (L)	Sheath External Diameter	Approx. Mass
R88A-CCW002P4	2 m	6 mm	0.1 kg

Connection Configuration and Dimensions

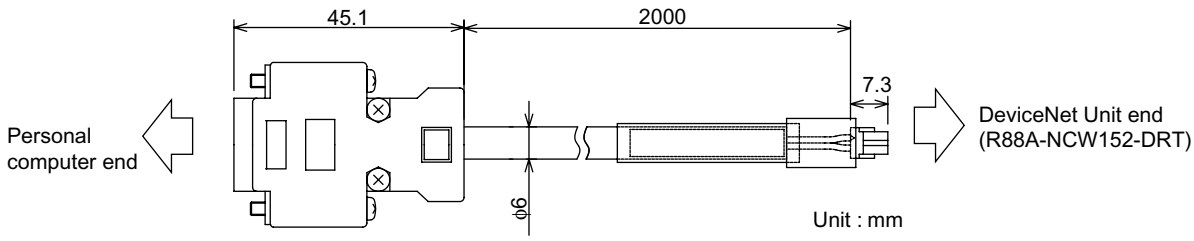

Wiring

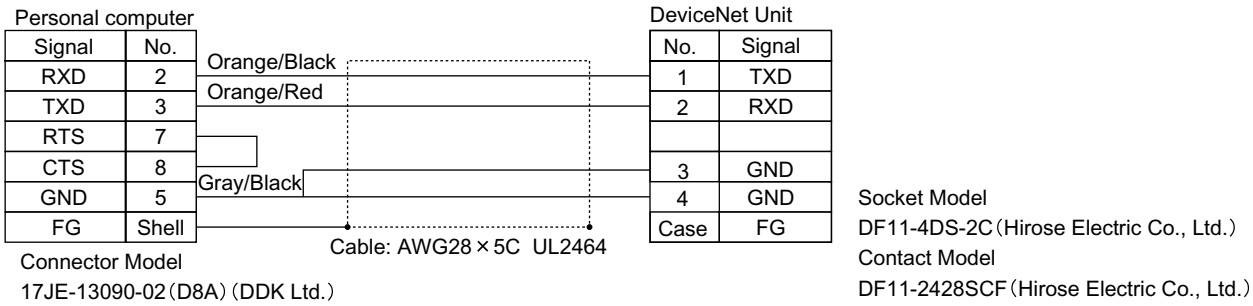

■ I/O Connector (R88A-CNU01R)

This connector connects to the I/O signals (CN4) of the DeviceNet Unit.

Dimensions

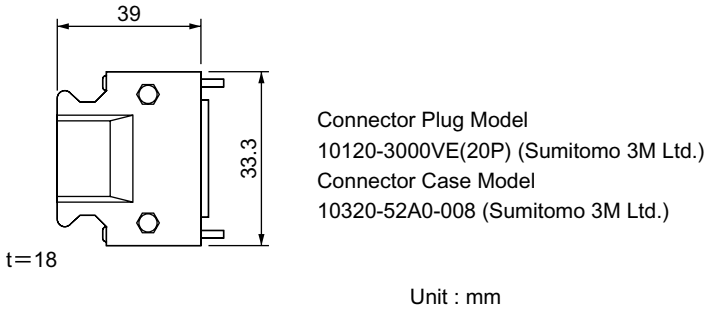

2.2 Checking Products on Delivery

The following procedure is used to check products upon delivery. Check the following items when products are delivered.

Check Items	Comments
Are the delivered products the ones that were ordered?	Check the model numbers marked on the nameplates of the DeviceNet Unit.
Is there any damage?	Check the overall appearance, and check for damage or scratches that may have occurred during shipping.

If any of the above items are faulty or incorrect, contact your OMRON sales representative or the dealer from whom you purchased the products.

■ External Appearance and Nameplate Example

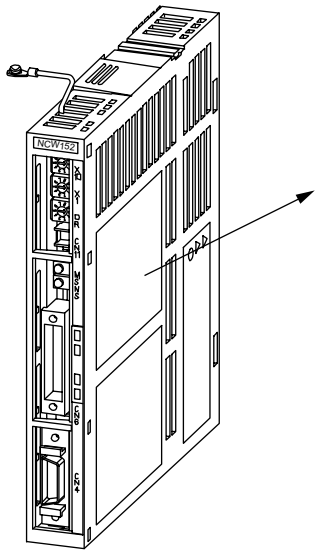

Fig. 2.1 External Appearance of the DeviceNet Unit

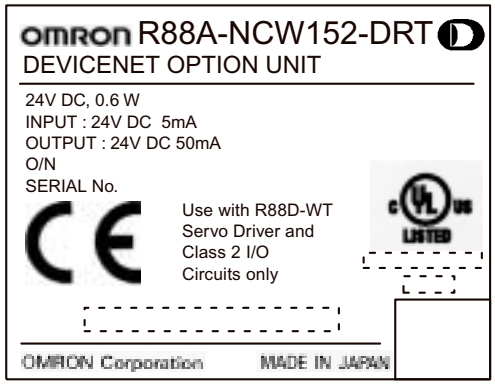

Fig. 2.2 Nameplate

2.3 Product Nomenclature

The following diagram illustrates the nomenclature of the DeviceNet Unit.

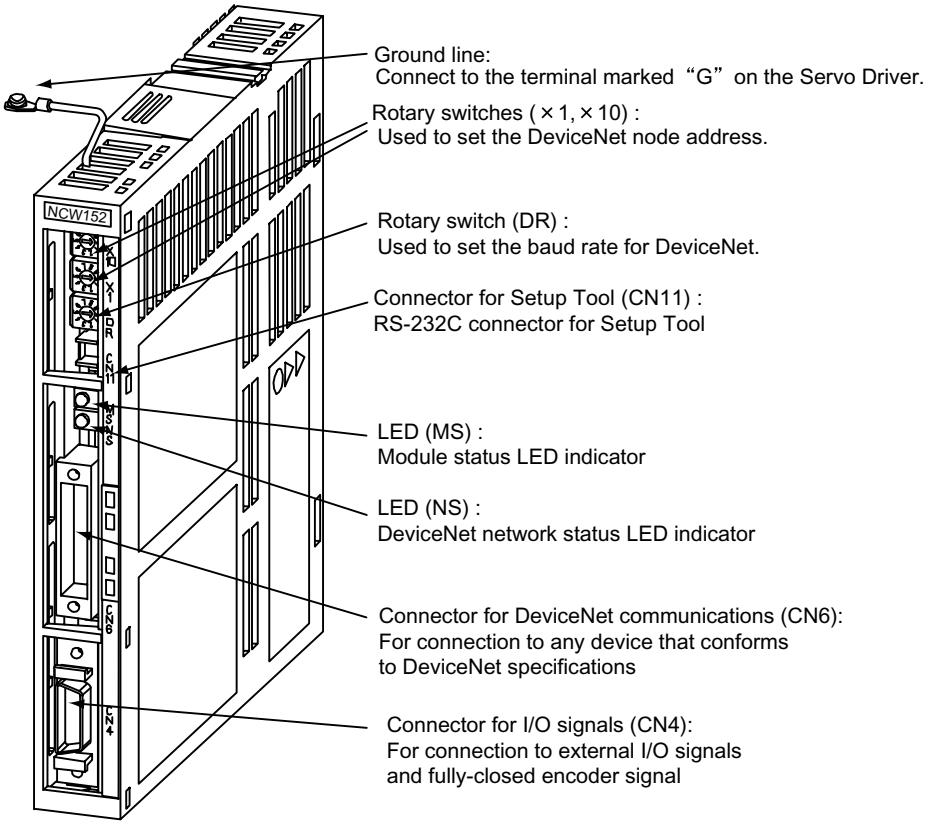

Fig. 2.3 DeviceNet Unit

2.4 Mounting the DeviceNet Unit

This section describes how to mount a DeviceNet Unit on the W-series Servo Driver.

Prepare the screws for connecting the ground line as shown in the following table:

Mounting Type	Servo Driver Models	Screw	Remarks
Base Mounted	R88D-WTA3HL to 02HL R88D-WTA3H to 10H	M3 × 10 round–head screw (spring or flat washer)	–
	R88D-WT15 to 50H	M4 × 10 round–head screws (spring or flat washer)	–
	R88D-WT60/75H	M4 × 8 round–head screw (spring or flat washer)	–
Rack Mounted	R88D-WTA3HL to 02HL R88D-WTA3H to 10H	M3 × 10 round–head screw (spring or flat washer)	Frontl panel mounting fitting (R88A-TK01W) is necessary.
	R88D-WT15H	M4 × 10 round–head screw (spring or flat washer)	Frontl panel mounting fitting (R88A-TK02W) is necessary.
	R88D-WT20H/30H/50H	M4 × 10 round–head screw (spring or flat washer)	Frontl panel mounting fitting (R88A-TK03W) is necessary.

By mounting DeviceNet Unit, the W-series Servo Driver can be used in a DeviceNet network. Use the following procedure to ensure DeviceNet Units are mounted correctly.

1. Remove the connector cover from the CN10 connector on the Servo Driver.

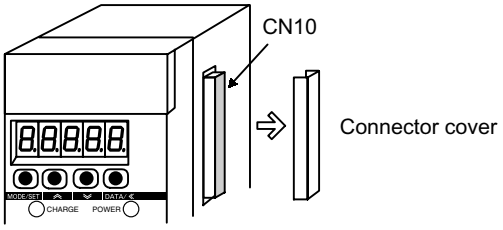

2. Mount the DeviceNet Unit on the Servo Driver.

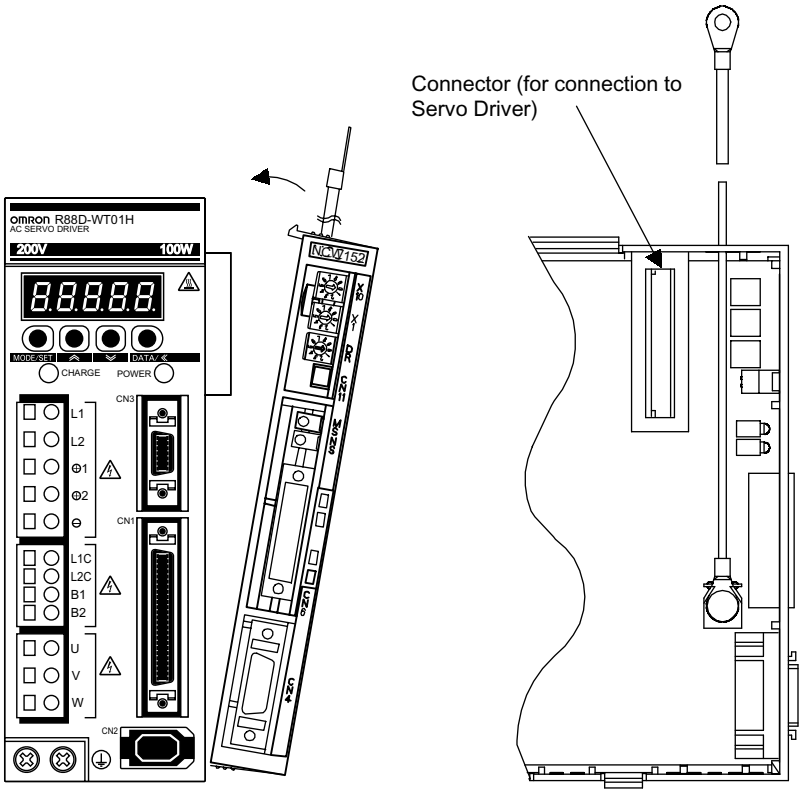

3. For grounding, connect a ground line of the DeviceNet Unit to the point marked “G” on the Servo Driver.

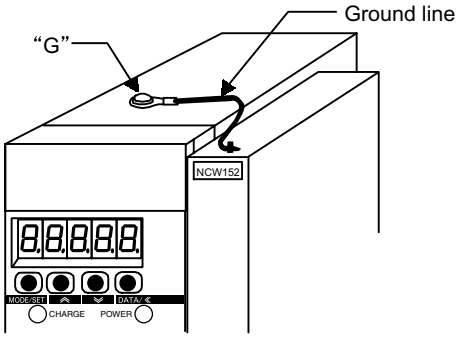

For Servo Driver 30 W to 5.0 kW

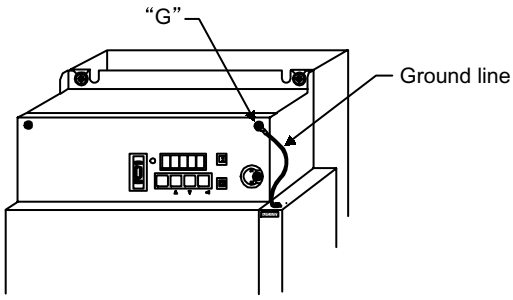

For 6.0-kW Servo Driver

2

When the DeviceNet Unit has been mounted correctly, the Servo Driver will appear as shown in the following diagram.

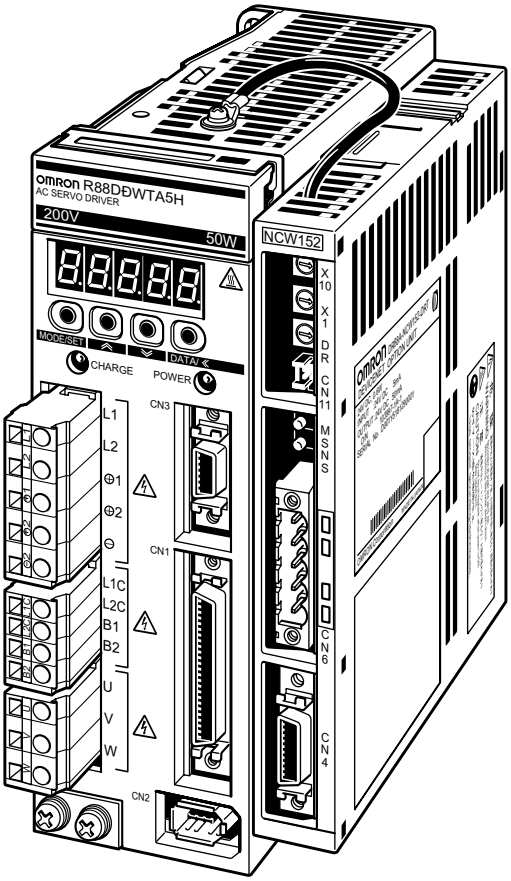

3

Installation

This chapter describes precautions for W-series Servo Driver with the DeviceNet Unit mounted. Incorrect installation will cause problems. Always observe the installation precautions shown in this chapter.

3.1 Storage Conditions - 3-2
3.2 Installation Site - 3-2
3.3 Orientation - 3-3
3.4 Installation - 3-4

3

3.1 Storage Conditions

Store the Servo Driver within the following temperature and humidity range when storing with the power cable disconnected.

Temperature range: -20 to 85°C

Humidity range : 90 % RH or less (non-condensing)

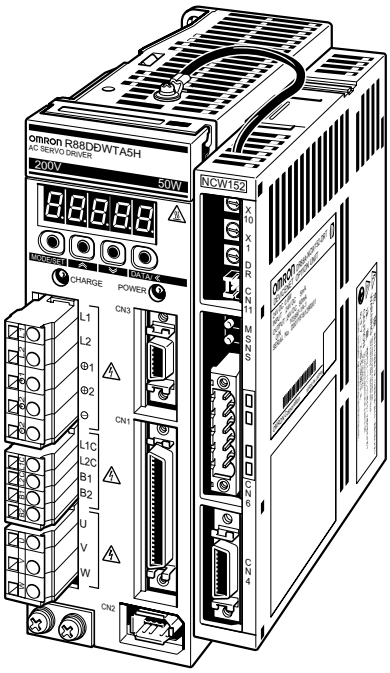

OMNUC W-series
AC Servo Driver with
DeviceNet Unit mounted

3.2 Installation Site

Take the following precautions at the installation site.

Situation	Installation Precaution
Installation in a Control Panel	Design the control panel size, Servo Driver layout, and cooling method so that the temperature around the Servo Driver does not exceed 55°C.
Installation Near a Heating Unit	Minimize heat radiated from the heating unit as well as any temperature rise caused by natural convection so that the temperature around the Servo Driver does not exceed 55°C.
Installation Near a Source of Vibration	Install a vibration isolator beneath the Servo Driver to avoid subjecting it to vibration.
Installation at a Site Exposed to Corrosive Gas	Corrosive gas does not have an immediate effect on the Servo Driver, but will eventually cause electronic components and contactor–related devices to malfunction. Take appropriate action to avoid corrosive gas.
Other Situations	Do not install the Servo Driver in hot or humid locations, or locations subject to excessive dust or iron powder in the air.

3.3 Orientation

Install the Servo Driver perpendicular to the wall as shown in the figure. The Servo Driver must be oriented this way because it is designed to be cooled by natural convection or cooling fan.

Secure the Servo Driver using 2 to 4 mounting holes. The number of holes depends on the Servo Driver capacity.

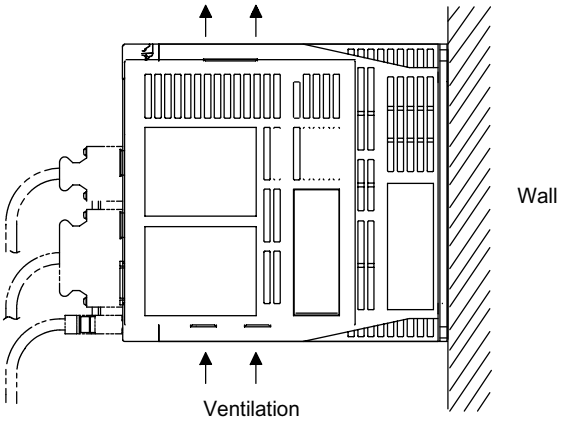

3.4 Installation

Follow the procedure below to install multiple Servo Drivers side by side in a control panel.

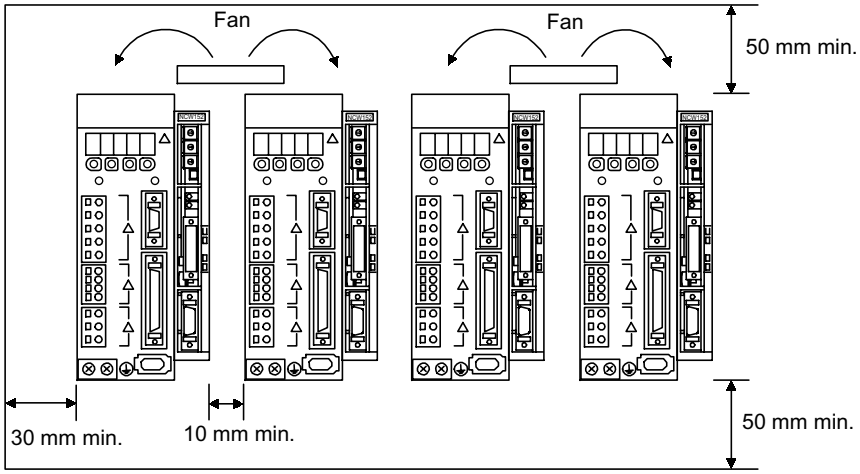

■ Servo Driver Orientation

Install the Servo Driver perpendicular to the wall so that the front panel (display and setting section) faces outward.

■ Cooling

As shown in the figure above, provide sufficient space around each Servo Driver for cooling by cooling fans or natural convection.

■ Side-by-side Installation

When installing Servo Drivers side by side as shown in the figure above, provide at least 10 mm (0.39 in) between and at least 50 mm (1.97 in) above and below each Servo Driver. Install cooling fans above the Servo Drivers to avoid excessive temperature rise and to maintain even temperature inside the control panel.

■ Environmental Conditions in the Control Panel

- Ambient Temperature of Servo Driver: 0 to 55 °C
- Humidity: 90% RH or less
- Vibration: 4.9 m/s^2
- Condensation and Freezing: None
- Ambient Temperature for Long–term Reliability: 45 °C max.

4

Connectors

This chapter describes the procedure used to connect W-series Servo Driver to peripheral devices when DeviceNet Unit is mounted and gives typical examples of I/O signal connections.

4.1 Connecting to Peripheral Devices - 4-2
4.1.1 Single-phase (100 V or 200 V) Main Circuit Specifications - - - - - - - - - 4-3
4.1.2 Three-phase, 200-V Main Circuit Specifications - - - - - - - - - - - - - - - - 4-4
4.1.3 Three-phase, 400-V Main Circuit Specifications - - - - - - - - - - - - - - - - 4-5
4.2 Internal Block Diagrams - 4-6
4.3 Servo Driver I/O Signals - 4-7
4.3.1 Connection Example of I/O Signal Connector (CN1) - - - - - - - - - - - - - 4-7
4.3.2 I/O Signals Connector (CN1) - 4-8
4.3.3 I/O Signal Names and Functions - 4-9
4.3.4 Interface Circuits - 4-10
4.4 I/O Signal Connections for DeviceNet Units (CN4) - - - - - - - 4-12
4.4.1 CN4 Connection Example - 4-12
4.4.2 Connection Terminal Layout - 4-12
4.4.3 I/O Signal Interface Circuits - 4-13
4.4.4 Fully-closed Encoder Connection Example - - - - - - - - - - - - - - - - - - 4-14
4.5 Connection and Wiring of the DeviceNet Communications Connector - - - - - - - - - - - - 4-15
4.5.1 Connector Specifications - 4-15
4.5.2 DeviceNet Communications Connection Example - - - - - - - - - - - - - - 4-17
4.5.3 DeviceNet Network Configuration Restrictions - - - - - - - - - - - - - - - - 4-19

4.1 Connecting to Peripheral Devices

This section provides examples of standard W-series Servo Driver connections to peripheral devices. It also briefly explains how to connect each peripheral device.

4.1.1 Single-phase (100 V or 200 V) Main Circuit Specifications

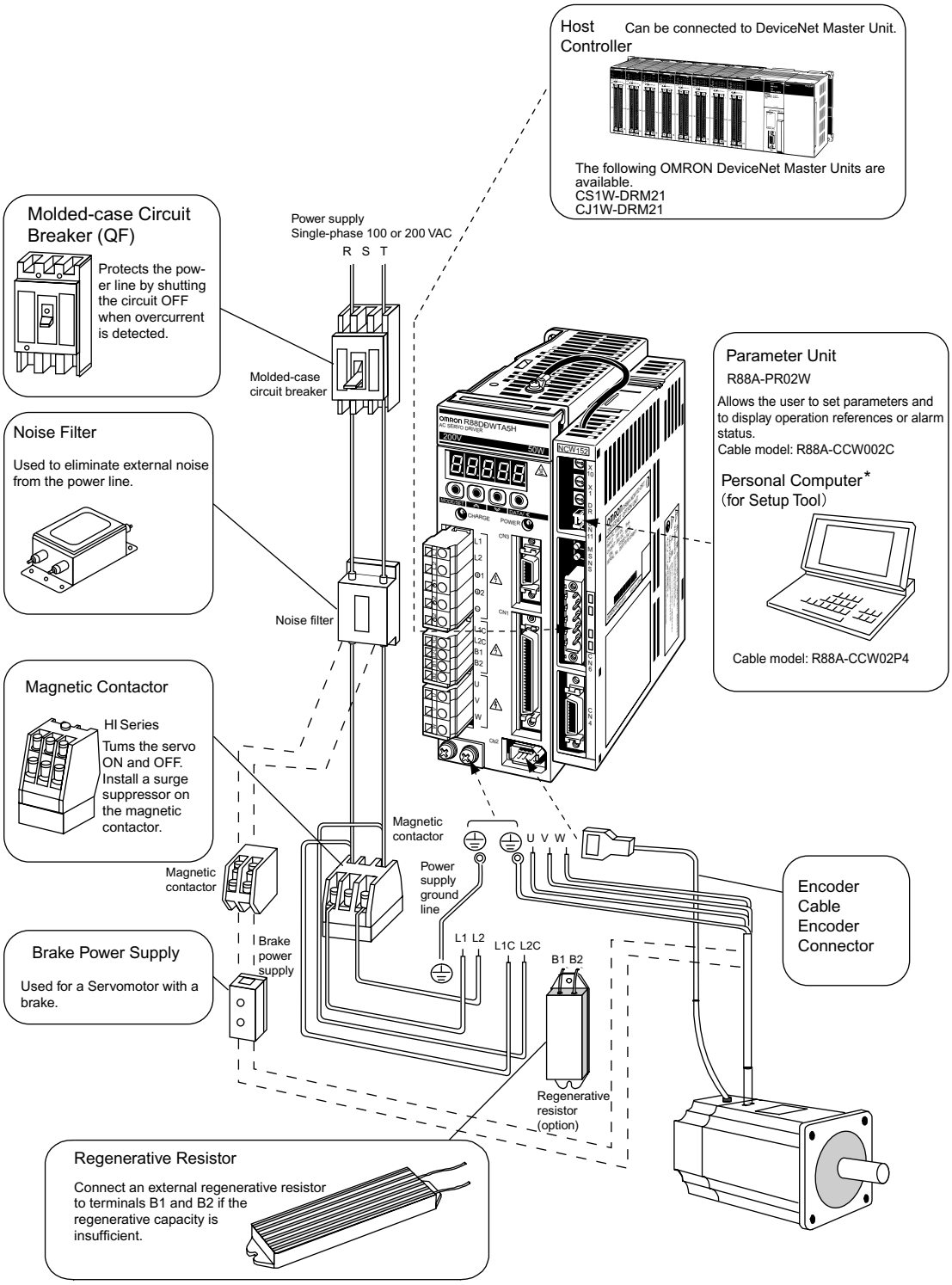

* A special Setup Tool Cable and the Setup Tool Software (SBCE-001) are required to set and monitor Servo Driver and DeviceNet Unit parameters from a personal computer.

4.1.2 Three-phase, 200-V Main Circuit Specifications

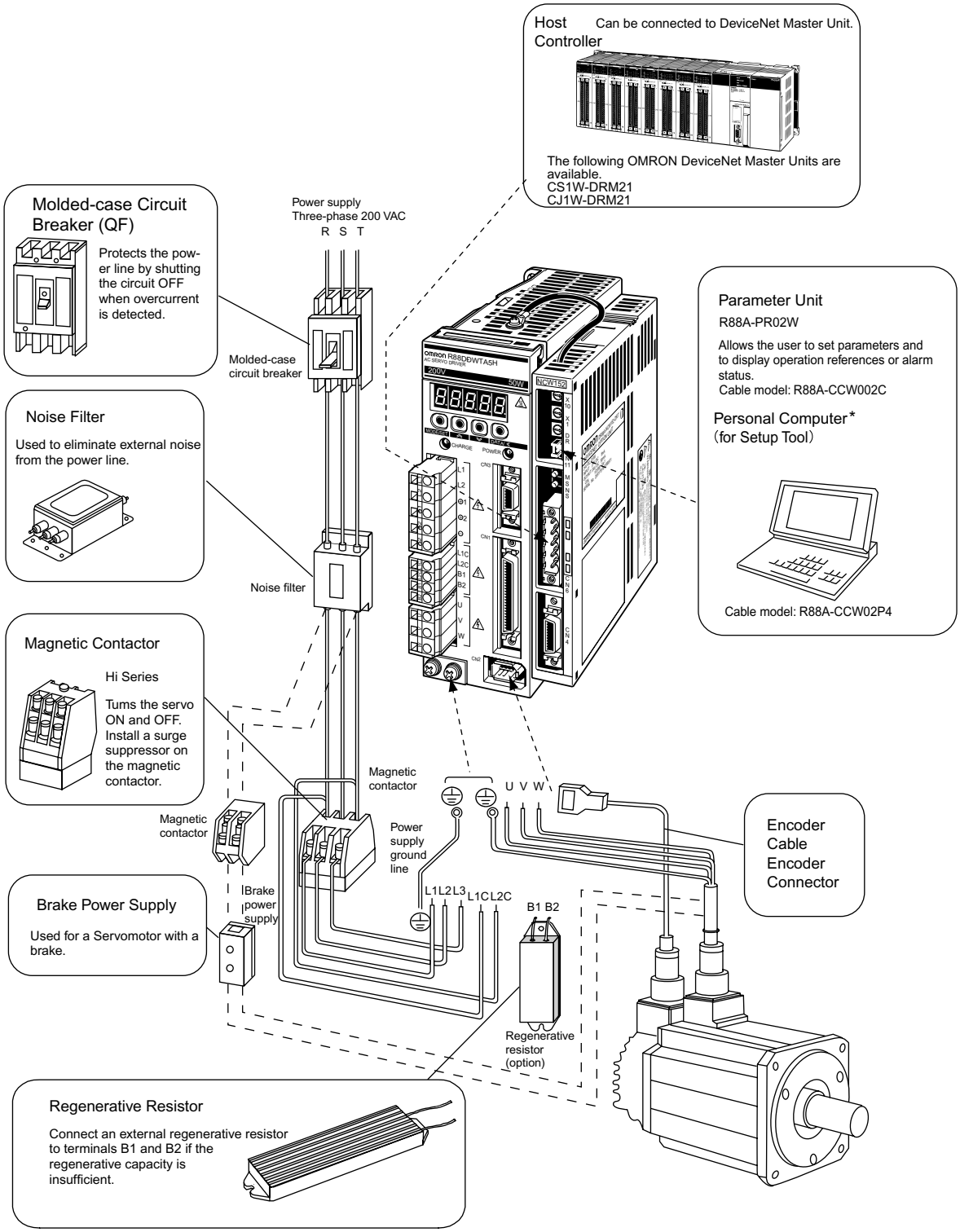

* A special Setup Tool Cable and the Setup Tool Software (SBCE-001) are required to set and monitor Servo Driver and DeviceNet Unit parameters from a personal computer.

4.1.3 Three-phase, 400-V Main Circuit Specifications

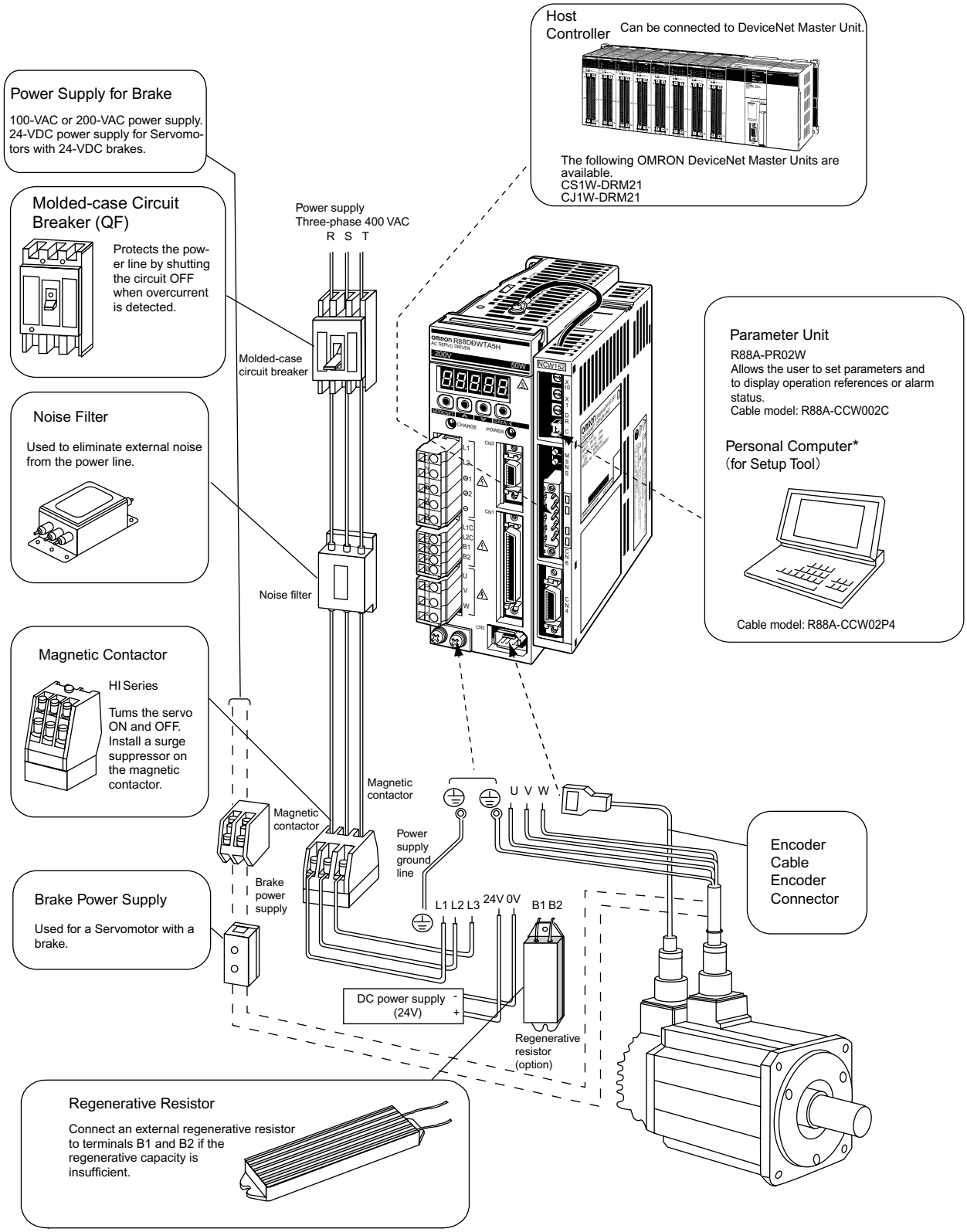

* A special Setup Tool Cable and the Setup Tool Software (SBCE-001) are required to set and monitor Servo Driver and DeviceNet Unit parameters from a personal computer.

4.2 Internal Block Diagrams

The following diagram shows an internal block diagram for the Servo Driver with the DeviceNet Unit, using the example of the 30 to 400 W 200-V and 30 to 200 W 100-V models.

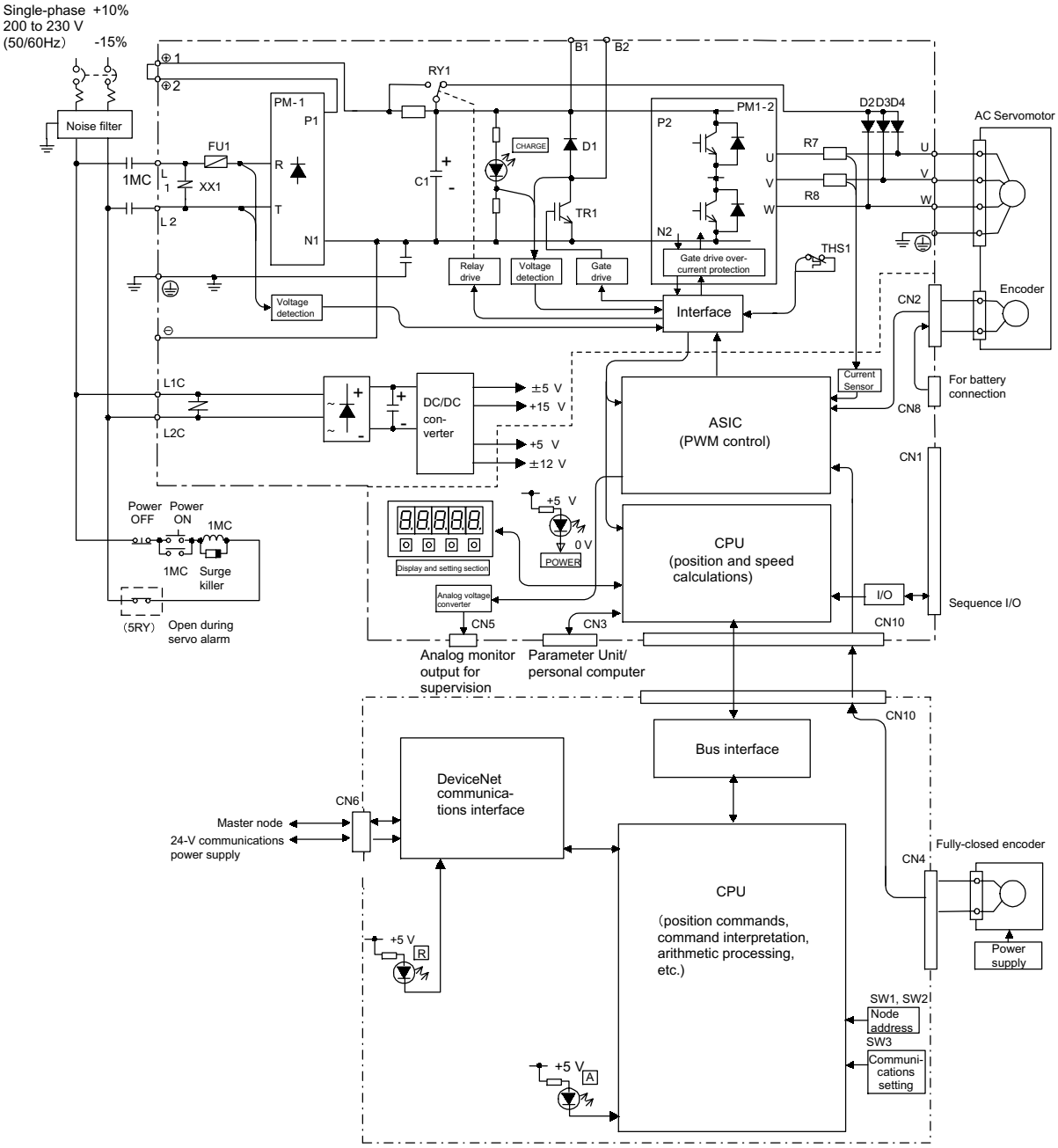

4.3 Servo Driver I/O Signals

This section describes I/O signals for the Servo Driver with the DeviceNet Unit.

4.3.1 Connection Example of I/O Signal Connector (CN1)

The following diagram shows a typical example of I/O signal connections.

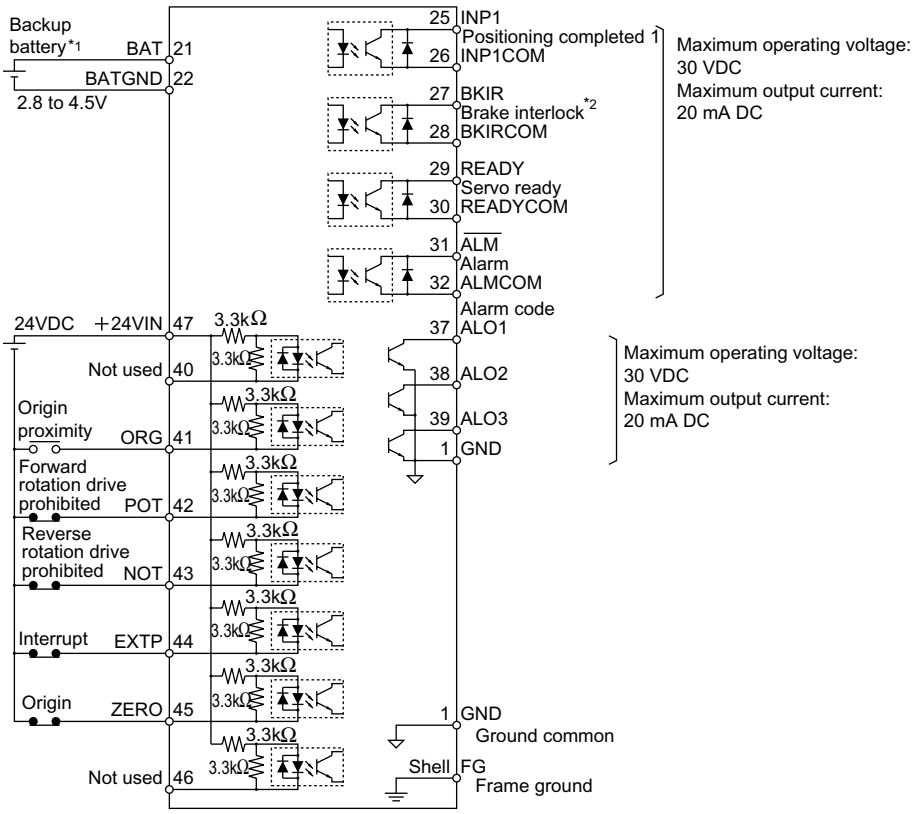

* 1. When using an absolute encoder, connect a backup battery only when there is no battery connected to the CN8.

* 2. Make signal allocations using parameters. Refer to *8.1.3 Standard Settings for I/O Signals*.

Note 1. Input signal settings are changed by the DeviceNet Unit and cannot be changed by the user.

2. The functions of the output signals on pins 25 to 30 and the polarity (effective high/low) of the input signals on pins 41 to 45 can be changed using the parameter settings. (The diagram above shows the standard settings.)

Fig. 4.1 I/O Signal Connections for CN1 Connectors

4.3.2 I/O Signals Connector (CN1)

The following diagram shows the layout of CN1 terminals.

■ CN1 Terminal Layout

2	GND	Ground common
4	–	–
6	GND	Ground common
8	–	–
10	GND	Ground common
12	–	–
14	–	–
16	–	–
18	–	–
20	–	–
22	BATGND	Backup battery - input
24	–	–

1	GND	Ground common
3	–	–
5	–	–
7	–	–
9	–	–
11	–	–
13	–	–
15	–	–
17	–	–
19	–	–
21	BAT	Backup battery + input
23	–	–
25	INP1	Positioning complete output 1

27	BKIR*	Brake inter-lock output
29	READY	Servo ready output
31	$\overline{\text{ALM}}$	Servo alarm output
33	–	–
35	–	–
37	ALO1	Alarm code output 1
39	ALO3	Alarm code output 3
41	ORG	Origin pro-ximity input signal
43	NOT	Reverse rota-tion drive pro-hibited input
45	ZERO	Origin input signal
47	+24VIN	External power supply input
49	–	–

26	INP1COM	Positioning complete output 1 common
28	BKIRCOM*	Brake inter-lock output common
30	READYCOM	Servo ready output common
32	ALMCOM	Alarm output ground
34	–	–
36	–	–
38	ALO2	Alarm code output 2
40	–	–
42	POT	Forward rota-tion drive pro-hibited input
44	EXTP	Interrupt input signal
46	–	–
48	–	–
50	–	–

* Make signal allocations using parameters. (Refer to *8.1.3 Standard Settings for I/O Signals.)*

Note 1. Do not use unused terminals for relays.

2. Connect the shield of the I/O signal cable to the connector shell.
The shield is connected to the FG (frame ground) at the Servo Driver end connector.

■ CN1 Specifications

Specifications for Servo Driver Connectors	Applicable Receptacles		
	Soldered	Case	Manufacturer
10250-52A2JL 50-p Right Angle Plug	10150-3000VE	10350-52A0-008	Sumitomo 3M Ltd.

4.3.3 I/O Signal Names and Functions

The following section describes I/O signal names and functions of the Servo Driver.

■ Input Signals

Signal Name		Pin No.	Function	
Common	ORG	41	Origin proximity input signal: Origin proximity input signal for origin search connected.	
	POT NOT	42 43	Forward rotation drive prohibited Reverse rotation drive prohibited	Overtravel prohibited: Stops Servomotor when movable part travels beyond the allowable range of motion.
	EXTP	44	Interrupt input signal: Signal used for interrupt input connected.	
	ZERO	45	Origin input signal	
	+24VIN	47	+24 V DC control power supply input: Users must provide the +24-V power supply. Allowable voltage fluctuation range: +11 to +25 V	
	BAT BATGND	21 22	Backup battery input: Connecting pin for the absolute encoder backup battery. Connect to either CN8 or CN1.	

■ Output Signals

Signal name		Pin No.	Function
Common	$\overline{\text{ALM}}$ ALMCOM	31 32	Alarm: Turns OFF when an error is detected.
	BKIR BKIRCOM	27 28	Brake interlock output: Output that controls the brake. The brake is released when this signal is ON.
	READY READYCOM	29 30	Servo ready: Turns ON if there is no servo alarm when the control/main circuit power supply is turned ON.
	ALO1 ALO2 ALO3	37 38 39	Alarm code output: Outputs 3-bit alarm codes. Open-collector: 30 V and 20 mA rating maximum
	FG	Shell	Connected to frame ground if the shield wire of the I/O signal cable is connected to the connector shell.
Position	INP1 INP1COM	25 26	Positioning complete output 1 (output in Position Control Mode): Turns ON when the number of deviation pulses reaches the set value. The setting is the number of deviation pulses set in command units (input pulse units defined by the electronic gear).

Note 1. Pin numbers in parenthesis () indicate signal grounds.

2. The functions allocated to BKIR, READY, and INP1 output signals can be changed via parameters. Those output signals can be changed to CLIMT, VLIMT, TGON, /WARN, and INP2 signals.

4.3.4 Interface Circuits

The following diagram shows an example of connections between a host controller and the I/O signal for a Servo Driver.

■ Sequence Input Circuit

The sequence input circuit interface connects through a relay or open-collector transistor circuit. Select a low-current relay, otherwise a faulty contact will result.

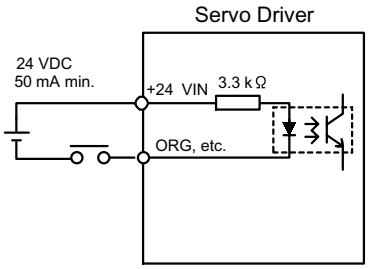

Relay

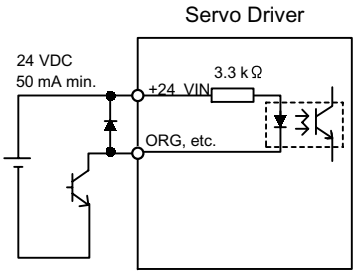

Open Collector

■ Output Circuit

Any of the following two types of Servo Driver output circuits can be used. Form an input circuit at the host controller that matches one of these types.

- Connecting to an Open-collector Output Circuit
  Alarm code output are open-collector transistor output circuits.
  Connect an open-collector output circuit through a photocoupler, relay, or line receiver circuit.

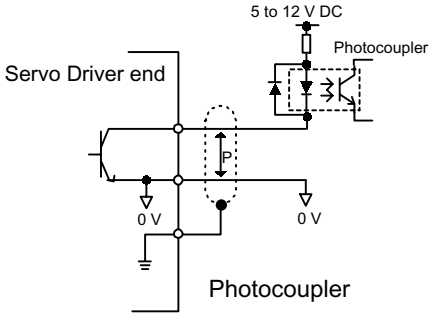

Photocoupler

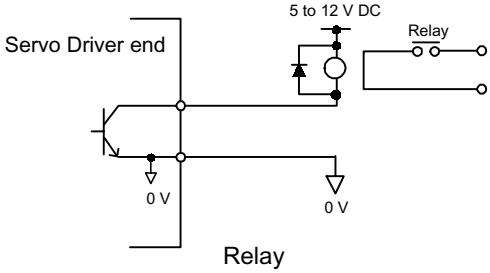

Relay

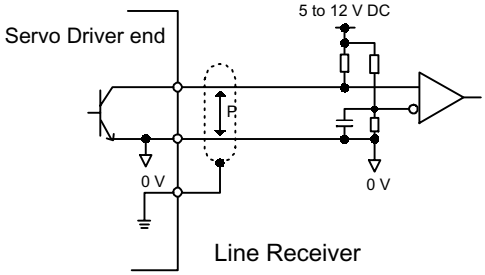

Line Receiver

Note The maximum allowable voltage and current capacities for open-collector output circuits are as follows:

- Voltage: 30 V DC max.
- Current: 20 mA DC max.

- Connecting to a Photocoupler Output Circuit

  Photocoupler output circuits are used for alarm, servo ready, and other sequence output signal circuits.

  Connect a photocoupler output circuit through a relay or line receiver circuit.

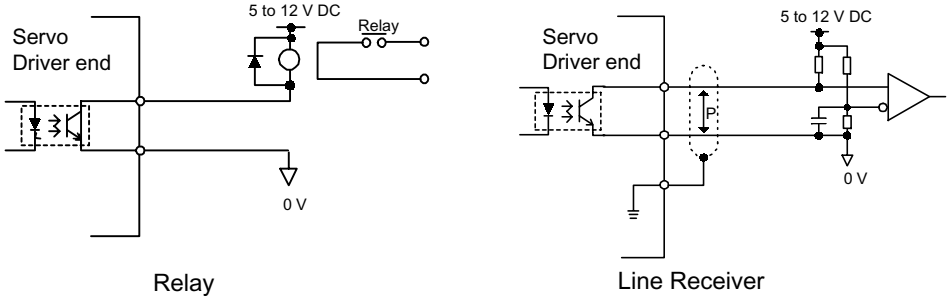

Note: The maximum allowable voltage and current capacities for photocoupler output circuits are as follows:

- Voltage: 30 V DC max.
- Current: 50 mA DC max.

4.4 I/O Signal Connections for DeviceNet Units (CN4)

The CN4 on a DeviceNet Unit is used for I/O signal and fully-closed encoder signal connections.

4.4.1 CN4 Connection Example

The following diagram shows a CN4 connection example.

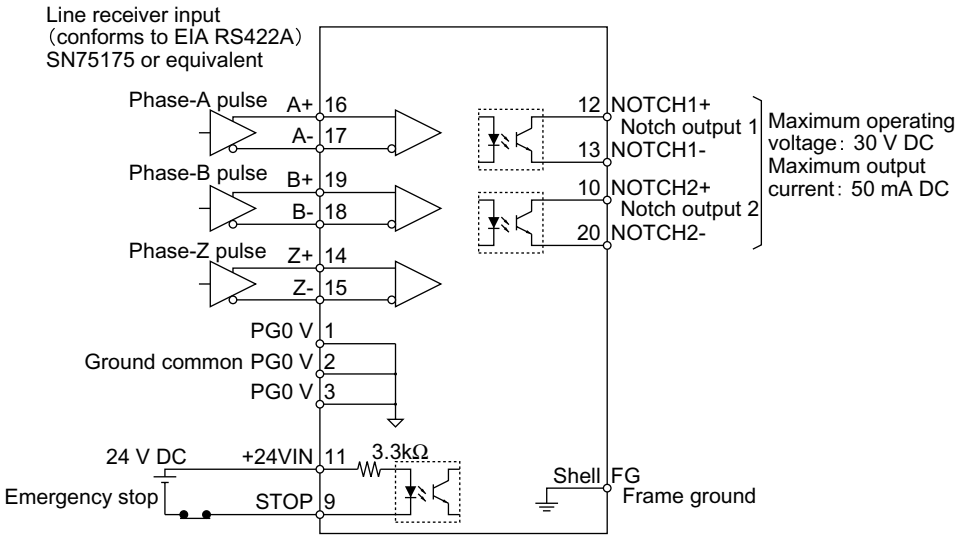

4.4.2 Connection Terminal Layout

The terminal layout and specifications for the CN4 are outlined below.

■ CN4 Terminal Layout

Pin No.	Signal	Description	Pin No.	Signal	Description
1	PG0V	Signal ground	11	+24VIN	24-V common terminal for external input
2	PG0V	Signal ground	12	NOTCH1+	Notch output 1
3	PG0V	Signal ground	13	NOTCH1-	–
4	–	–	14	Z+	Phase-Z input
5	–	–	15	Z-	–
6	–	–	16	A+	Phase-A input
7	–	–	17	A-	–
8	–	–	18	B-	Phase-B input
9	STOP	Emergency stop input	19	B+	–
10	NOTCH2+	Notch output 2	20	NOTCH2-	Notch output 2

Note 1. The encoder power supply and battery must be supplied externally.

2. The FG is connected to the connector shell.

■ CN4 Connector Specifications

Part	Signal	Manufacturer
Connector	10120-3000VE (20P)	Sumitomo 3M Ltd.
Connector shell	10320-52A0-008	–

4.4.3 I/O Signal Interface Circuits

The following diagram shows an example of connections between a host controller and the I/O signals for a DeviceNet Unit.

■ Sequence Input Circuit

The sequence input circuit connects through a relay or open-collector transistor circuit. Select a low-current relay, otherwise a faulty contact will result.

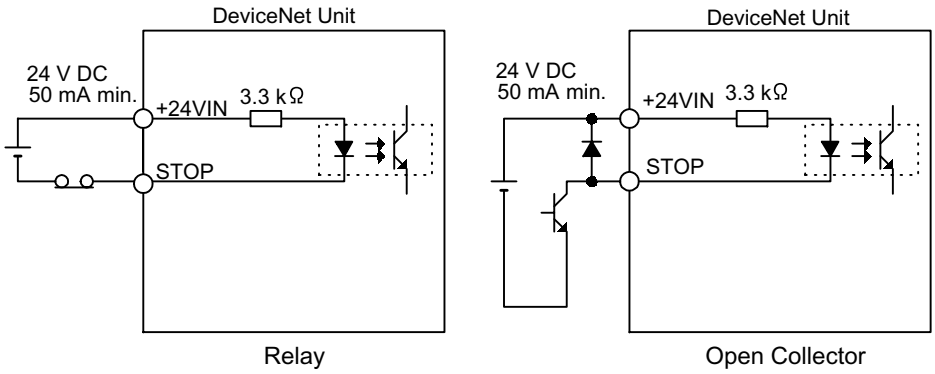

■ Sequence Output Circuit

Notch output signals are used for photocoupler output circuits. Connect the notch output signals to relays or line receiver circuits.

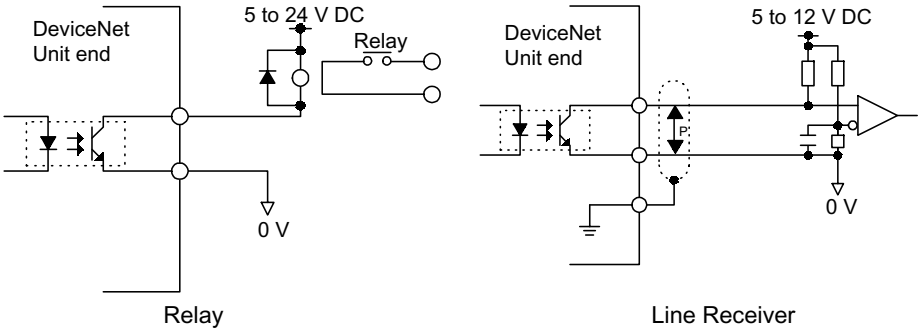

Note The maximum allowable voltage and current capacity for photocoupler output circuits are as follows:

- Voltage: 30 V DC max.
- Current: 50 mA DC max.

4.4.4 Fully-closed Encoder Connection Example

The following diagram shows a connection example for a fully-closed encoder.

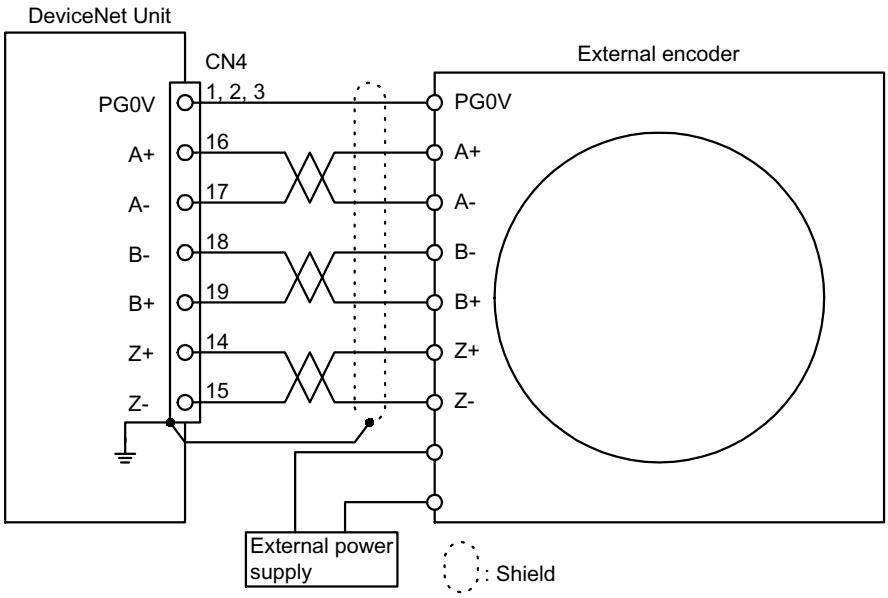

4.5 Connection and Wiring of the DeviceNet Communications Connector

This section provides connection and wiring of the DeviceNet communications connector.

4.5.1 Connector Specifications

Removable connectors are used to connect the cable and Unit and to connect the cable and Branch Taps. The connectors are provided with the product. Some products are equipped with connector lock screws and others are not.

For multi-drop wiring, convenient multi-drop connectors are commercially available.

Name	Appearance	Model Number	Description	Manufacturer
COMBICON Plug	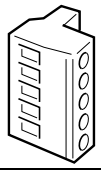	MSTB2.5/5-ST-5.08AU	Used to connect a node.	Product code: 1752399, Phoenix Contact K.K.*
COMBICON Plug with Lock Screws	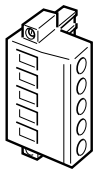	XW4B-05C1-H1-D	• Used to connect a node. • Used to connect a T-branch Tap. • Equipped with lock screws.	OMRON
COMBICON Plug	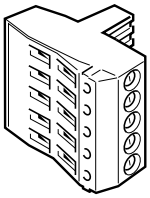	XW4B-05C4-T-D	• Used to connect a node. • Used for multi-drop wiring.	OMRON

* Connectors made by Phoenix Contact K.K. can be purchased from OMRON 24 SERVICE Co., Ltd.

■ Dimensions

The dimension of the connectors are shown below.

MSTB2.5/5-ST-5.08AU

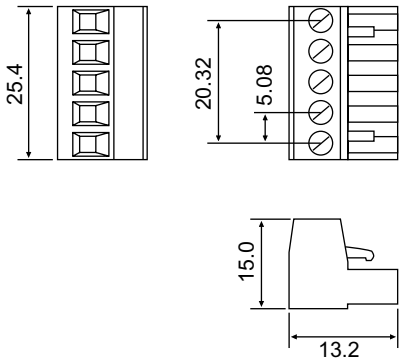

Unit : mm

XW4B-05C1-H1-D

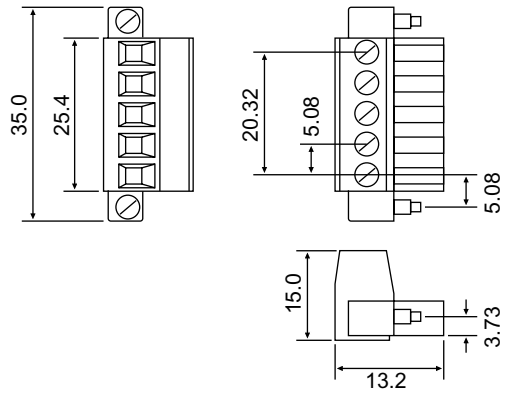

Unit : mm

XW4B-05C4-T-D

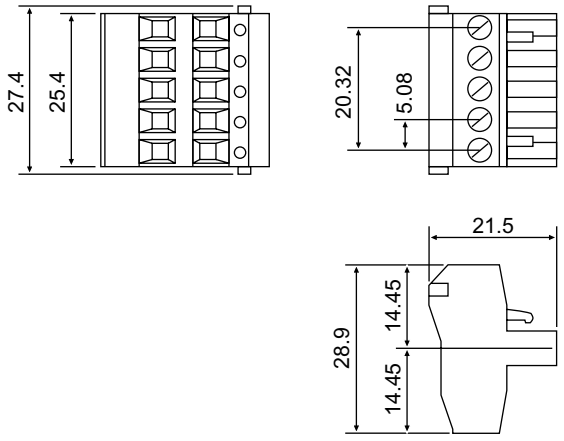

Unit : mm

■ Special Screwdriver for Connectors

Use the following Screwdrivers for the connectors.

Model Number	Description	Manufacturer
XW4Z-00C	For DeviceNet connectors	OMRON
SZF-1	For DeviceNet connectors	*

* Can be purchased from OMRON 24 SERVICE Co., Ltd.

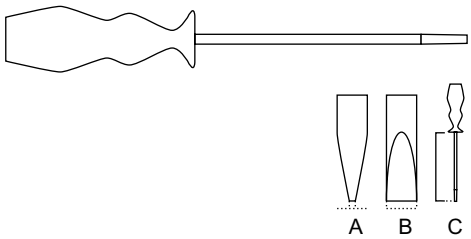

Unit : mm

A	B	C
0.6	3.5	100

4.5.2 DeviceNet Communications Connection Example

A DeviceNet network configuration is shown below.

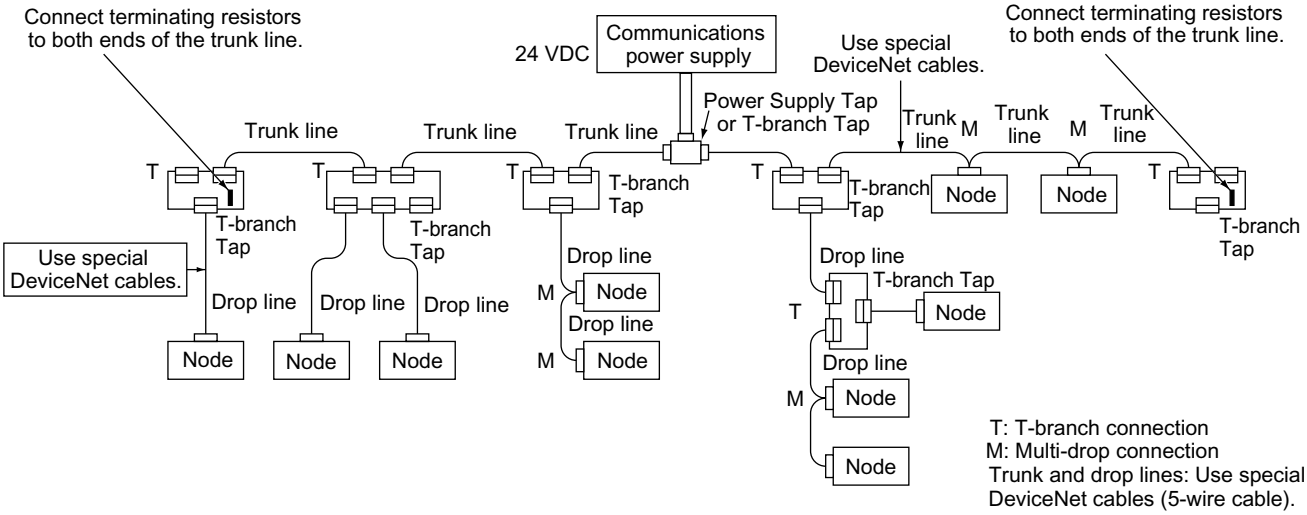

Fig. 4.2 Network Connections

■ Configuration Elements

The network is configured from the following elements.

Nodes

A node is either a slave that connects to an external I/O, or the master that manages the external I/O of the slaves. There are no restrictions on the location of the master or slaves. Any node in *Fig 4.2* can be the master or a slave.

Trunk Line and Drop Lines

A cable with a terminator on each end is a trunk line. Any cable branching from the trunk line is a drop line. The length of the trunk line and the maximum network length are not necessarily the same. Use special DeviceNet cables for the trunk line and all drop lines. Either thick cables or thin cables may be used.

Connection Methods

There are two methods that can be used to connect DeviceNet nodes: T-branch connections and multi-drop connections.

- T-branch connections: Used to branch a drop line using a T-branch Tap.
- Multi-drop connections: Used to connect a node directly to the trunk line or directly to a drop line.

As shown in *Fig 4.2*, both T-branch connections and multi-drop connections can be used together in the same network.

Terminating Resistors

Terminating resistors must be connected to both ends of the trunk line to reduce signal reflection and stabilize communications. Terminating resistors can be connected either on a T-branch Tap or as a Terminal Block.

When connecting terminating resistors as a Terminal Block, use special DeviceNet cable to connect the Terminal Block.

Communications Power Supply

To enable DeviceNet communications, power for communications must be provided via the special DeviceNet cables to the communications connector at each node. Use separate power supplies for the communications, internal circuits, and I/O.

■ Connection Methods

The network connection methods are described in this section.

Trunk Line and Drop Lines

The trunk line is the cable with terminating resistors connected to both ends. A drop line is a cable that branches from the trunk line. Special DeviceNet cables must be used for both the trunk line and all drop lines.

Branching Patterns

- Branching Patterns from Trunk Line

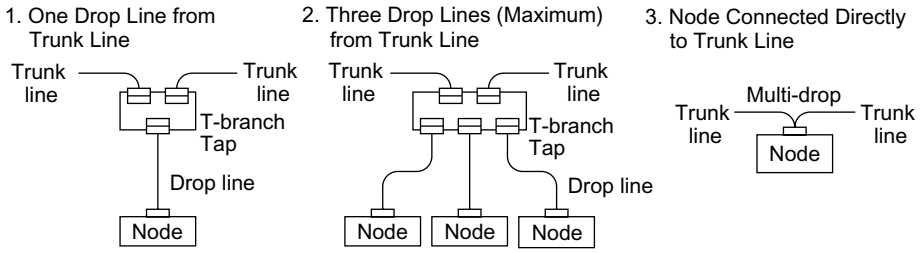

- Branching Patterns from Drop Line

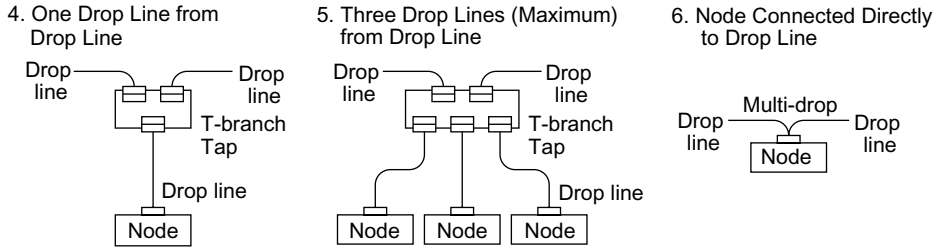

Various combinations of these connections can be used on the same network, as shown in the following diagram.

Note There are no restrictions in the number of nodes that can be connected to a single drop line, but a maximum of 64 nodes total can be connected to a single network, including the DeviceNet Master Unit.
When a DeviceNet Configurator is not used to allocate Remote I/O with SYSMAC CS/CJ series or C200HX/HG/HE PC, a maximum of 51 nodes total can be connected to a single network, including the DeviceNet Master Unit. When a DeviceNet Configurator is not used to allocate Remote I/O with C200HS series PC, the maximum is 33 nodes, including the DeviceNet Master Unit.

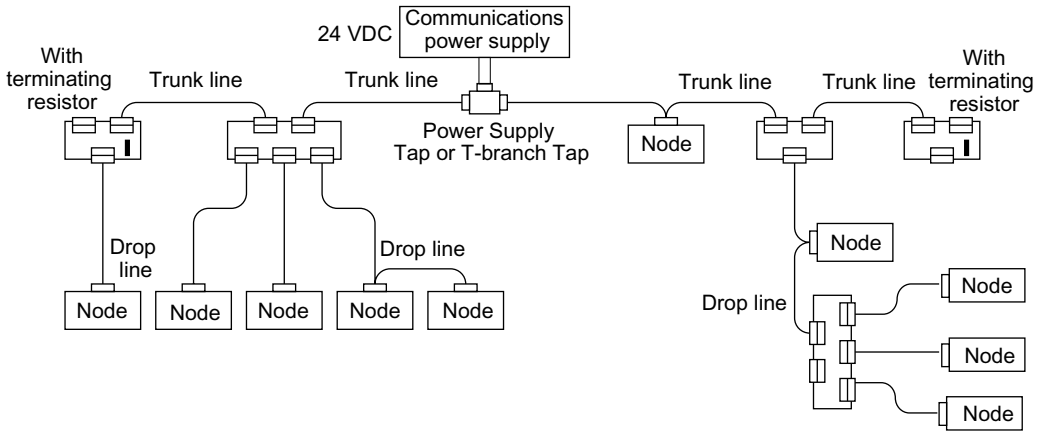

4.5.3 DeviceNet Network Configuration Restrictions

To enable the widest possible application of DeviceNet communications, the baud rate can be selected and the connection methods can be freely combined using both T-branch and multi-drop connections.

This section describes the restrictions required in DeviceNet communications to achieve this wide range of application.

■ Baud Rate and Communications Distance

The maximum length of the DeviceNet communications lines depends on the baud rate and the type of cable that is used.

The DeviceNet communications lines are restricted in the following three ways.

- Maximum network length
- Drop line length
- Total drop line length

Design and install the DeviceNet network to meet all of these restrictions to ensure reliability in communications.

Maximum Lengths of DeviceNet Communications Lines

Baud Rate (kbit/s)	Maximum Network Length (m)		Maximum Drop Line Length (m)	Maximum Total Drop Line Length (m)
	Thick Cable*1	Thin Cable*2		
500	100	100	6	39
250	250	100	6	78
125	500	100	6	156

* 1. Thick cable (5-wire): DCA2-5C10 (100 m)
* 2. Thin cable (5-wire): DCA1-5C10 (100 m)

Maximum Network Length

The maximum network length is longest of the following:

- Distance between the two most distant nodes
- Distance between the Terminating Resistors

There are two types of cables for special DeviceNet cables: Thick cables and thin cables. The maximum length of a network depends on the type of cable that is used, as shown in the above table. Use the cables within the restrictions given for them. (The signal voltage attenuation is affected by the cable thickness, and thus the maximum length is different.)

If both types of cable are combined in the same network, the following restrictions apply.

Baud Rate (kbit/s)	Maximum Network Length
500	Length of the thick cable + Length of thin cable ≤ 100 m
250	Length of the thick cable + 2.5 × Length of thin cable ≤ 250 m
125	Length of the thick cable + 5.0 × Length of thin cable ≤ 500 m

Drop Line Lengths

A drop line length is measured from the point in the trunk line where the original branch was made to the end of the branch. The maximum length of a drop line is 6 m. It is possible to make more branches from a drop line, but the total length must be added to the drop line length from the first branch from the trunk line to the end of the last drop line.

Total Drop Line Length

A total drop line length is the total sum length of all the drop lines used for the communications line. It does not include the length of the trunk line. The standard for the total drop line length varies with the baud rate; refer to the table in *Maximum Lengths of DeviceNet Communications Lines* on *page 4-20*.

Communications Line Length Calculation Example

An example of calculating the maximum network length, drop line length, and total drop line length is given below for the following DeviceNet network.

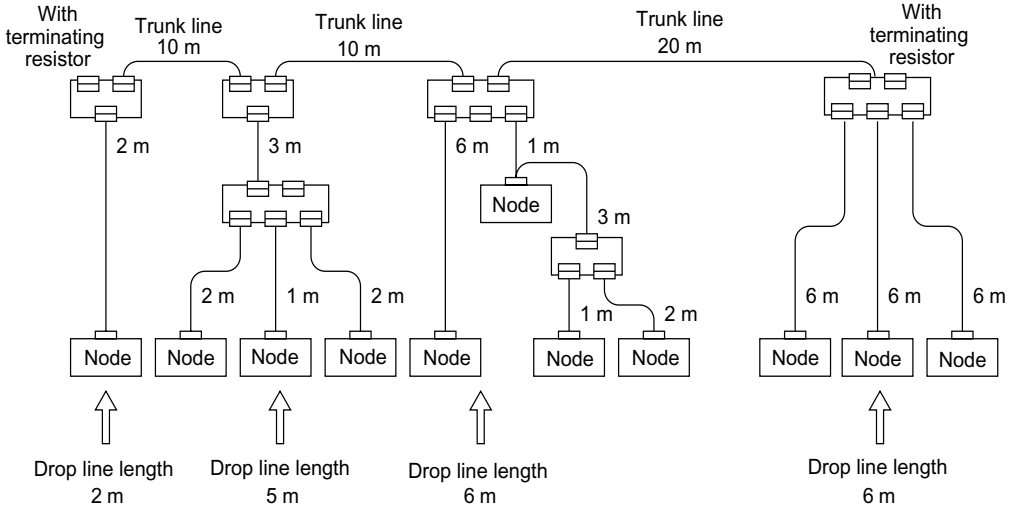

Maximum Network Length

The line length between two nodes that are farthest apart is 48 m. The line length between the terminating resistors is 40 m. The maximum network length is thus 48 m.

Drop Line Length

There are four branches from the trunk line. The drop line length is given in the above diagram for each. The longest drop line length is 6 m.

Total Drop Line Length

The total length of all drop lines is 41 m.

■ Connection of the Terminating Resistors

Be sure to connect the Terminating Resistors at both ends of the trunk line to reduce signal reflection and stabilize communications.

- When there is a T-branch Tap 6 m or less from the end of the trunk line (or the node):
  A Terminating Resistor attached to a T-branch Tap can easily be mounted without taking up much space.
- When there is not a T-branch Tap 6 m or less from the end of the trunk line (or the node):
  Use one of the following methods.
  - Connect a T-branch Tap to which a Terminating Resistor has been mounted.
  - Connect a Terminal-block Terminating Resistor.

In either case, be sure to make the cable length 1 m or less from the node to the Terminating Resistor.

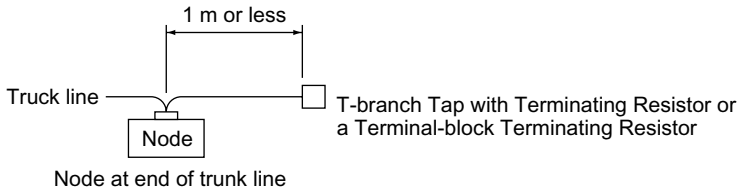

5

Parameter Settings

This chapter provides an outline and details of the DeviceNet Unit parameters.

5.1 Parameters - 5-2
5.1.1 Outline of Parameters - 5-2
5.1.2 Parameter Types - 5-2
5.1.3 Editing Parameters - 5-3
5.1.4 Effective Timing - 5-3
5.2 Parameter Tables - 5-4
5.2.1 Unit Parameters - 5-4
5.2.2 Origin Search Parameters - 5-4
5.2.3 Machine System and Peripheral Device Parameters - - - - - - - - - - - - - 5-5
5.2.4 Speed, Acceleration, and Deceleration Parameters - - - - - - - - - - - - - 5-6
5.2.5 Positioning Parameters - 5-7
5.2.6 Multi-speed Positioning Parameters - 5-7
5.2.7 Notch Output Parameters - 5-9
5.2.8 Point Table Parameter - 5-9
5.3 Parameter Details - 5-10
5.3.1 Unit Parameters - 5-10
5.3.2 Origin Search Parameters - 5-13
5.3.3 Machine System and Peripheral Devices - - - - - - - - - - - - - - - - - - - 5-22
5.3.4 Speed, Acceleration, and Deceleration - 5-26
5.3.5 Positioning - 5-39
5.3.6 Point Table - 5-41
5.3.7 Multi-speed Positioning - 5-41
5.3.8 Notch Signal Output Positioning - 5-42

5.1 Parameters

This section provides an outline, types, editing method, and effective timing of DeviceNet Unit parameters.

5.1.1 Outline of Parameters

A parameter is the name given to the user constants that are required as the settings used to operate the DeviceNet Unit. You must set the optimum values for parameters according to the machine to which the DeviceNet Unit and the W-series Servo Driver are connected.

You can edit the DeviceNet Unit parameters using the Setup Tool, DeviceNet Configurator (version 2.2 or later), or host controller.

For parameters of the W-series Servo Driver, refer to *Chapter 8 Servo Driver Settings* or the *OMNUC W-series Servomotors/Servo Drivers User's Manual* (I531-E1-□).

5.1.2 Parameter Types

Parameters are classified depending on their purpose as follows:

- Unit parameters
- Origin search parameters
- Machine system and peripheral device parameters
- Speed, acceleration, and deceleration parameters
- Positioning parameters
- Multi–speed positioning parameters
- Notch output positioning parameters
- Point table parameters

Parameters are further classified according to the priority of the setting, as shown below.

Table 5.1 Parameter Types

Type	Meaning
A	Parameters that must be set even when using the DeviceNet Unit in standard mode.
B	Parameters that must be set when using the DeviceNet Unit in special mode.
C	Parameters whose settings hardly ever need to be changed.

5.1.3 Editing Parameters

You can edit parameters using the following methods.

Table 5.2 Methods of Editing Parameters

Tools	Methods	Remarks
Setup Tool	Select Option Parameter List from the Parameter Menu to read all the DeviceNet Unit parameters. After the parameters have been displayed, select the parameters you want to edit, and click the Edit Button to edit the parameters.	All changed parameters are stored in RAM, so they are erased when the power is turned OFF. Use the Unit Reset Command to write the parameter data in RAM to the flash ROM.
Master Device or DeviceNet Configurator	You can edit using Explicit Message (Set_Attribute_Single) from the Master Device.	All changed parameters are stored in RAM, so they are erased when the power is turned OFF. Execute the Reset Service for the Identity Object to write the parameter data in RAM to the flash ROM.

Note Parameters changed from each setting device are stored in RAM.
To save parameters in flash ROM after adjustments have been completed, execute the Unit Reset Command in the Setup Tool or execute the Reset Service to the Identity Object via DeviceNet.

5.1.4 Effective Timing

Not all parameters edited from the Setup Tool or Master Device are effective immediately. Changed parameters are effective at one of the following two times.

Table 5.3 Effective Timing for Parameters

Timing	Control or Processing
Power–up	The values of all parameters are made effective at the following times. • When power is turned ON. • When the Unit is reset from the Setup Tool or via commands.
Immediate	The values of changed parameters are made effective immediately. However, parameters will be stored in the Flash ROM at the following times. • When the Unit is reset from the Setup Tool or via commands. • When the Reset Service to the Identity Object is executed via DeviceNet.

5.2 Parameter Tables

The following tables list the parameters.

If using the Setup Tool or reading/writing using a Remote I/O communications fuction, edit parameters using parameter No. If editing via DeviceNet Explicit Messages, edit using the object number and attribute number. Refer to *6.10 Changing Parameters* or the host controller manual for details.

5.2.1 Unit Parameters

The unit parameter table is shown below.

Object	Attribute	No.	Name	Range	Units	Effective Timing	Default Value	Type
0x64	#30	Pn810	Electronic Gear Ratio G1 (Numerator)	1 to 10,000,000	–	Power-up	1	B
	#31	Pn811	Electronic Gear Ratio G2 (Denominator)	1 to 10,000,000	–	Power-up	1	B

5.2.2 Origin Search Parameters

The table of origin search parameters are shown below.

Object	Attribute	No.	Name	Range	Units	Effective Timing	Default Value	Type
0x64	#10	Pn800	Origin Search Mode	0 to 6	–	Immediate	0	B
	#11	Pn801	Origin Search Function Selection	0 to 7	–	Power-up	1	B
	#12	Pn802	Origin Search High Speed	1 to 240,000	×1,000 steps/min	Immediate	10,000	B
	#13	Pn803	Origin Search Proximity Speed	1 to 240,000	×1,000 steps/min	Immediate	1,000	B
	#14	Pn804	Origin Search Compensation Speed	1 to 240,000	×1,000 steps/min	Immediate	500	B
	#15	Pn805	Origin Compensation Value	0 to 99,999,999	Steps	Immediate	0	B
	#16	Pn806	Zero Position Output Width	0 to 32,767	Steps	Immediate	100	B
	#17	Pn809	Absolute Position Setting	±99,999,999	Steps	Immediate	0	C
	#18	Pn80A	Origin Search Acceleration/Deceleration Time	1 to 10,000	ms	Immediate	100	B

Note 1. "Steps" means "command unit." For command unit details, refer to *5.3.1 Unit Parameters*.

2. If you set the command unit to 0.001 mm, 1,000 steps/min becomes mm/min.

5.2.3 Machine System and Peripheral Device Parameters

The machine system and peripheral device parameter table is shown below.

Object	Attribute	No.	Name	Range	Units	Effective Timing	Default Value	Type
0x64	#32	Pn812	Coordinate Type	0, 1	–	Immediate	0	C
	#33	Pn813	Command Unit/R	1 to 1,500,000	Steps	Immediate	360,000	C
	#34	Pn814	Backlash Compensation Value	0 to 32,767	Steps	Immediate	0	C
	#35	Pn815	Backlash Compensation Direction	0, 1	–	Immediate	0	C
	#36	Pn816	Positive Software Limit	±99,999,999	Steps	Immediate	99,999,999	B
	#37	Pn817	Negative Software Limit	±99,999,999	Steps	Immediate	–99,999,999	B
	#38	Pn818	Function Selection	0 to 3	–	Immediate	0	B
	#39	Pn819	Limit Input Signal Function Selection	0 to 3	–	Immediate	1	B
	#40	Pn81A	Limit Input Action Selection	0, 1	–	Immediate	1	B
	#41	Pn81B	Emergency Stop Function Selection	0 to 3	–	Immediate	1	B
	#42	Pn81C	Emergency Stop Action	0	–	Immediate	0	B

Note 1. "Steps" means "command unit." For command unit details, refer to *5.3.1 Unit Parameters*.

2. If you set the command unit to 0.001 mm, 1,000 steps/min becomes mm/min.

5.2.4 Speed, Acceleration, and Deceleration Parameters

A table of speed, acceleration, and deceleration parameters is shown below.

Object	Attribute	No.	Name	Range	Units	Effective Timing	Default Value	Type
0x64	#51	Pn821	Speed	1 to 240,000	× 1,000 steps/min	Immediate	24,000	B
	#52	Pn822	Acceleration Time	1 to 10,000	ms	Immediate	100	B
	#53	Pn823	Deceleration Time	1 to 10,000	ms	Immediate	100	C
	#54	Pn824	Switch Speed	1 to 240,000	× 1,000 steps/min	Immediate	12,000	C
	#55	Pn825	Second Acceleration/Deceleration Time	1 to 10,000	ms	Immediate	200	B
	#56	Pn826	Acceleration/Deceleration Type	0 to 3	–	Immediate	0	B
	#57	Pn827	Interrupt Feeding Speed	1 to 240,000	× 1,000 steps/min	Immediate	24,000	B
	#58	Pn829	Filter Selection	0 to 3	–	Immediate	0	B
	#59	Pn830	JOG Unit Selection	0, 1	–	Immediate	0	B
	#60	Pn831	JOG Speed	1 to 240,000	× 1,000 steps/min	Immediate	24,000	B
	#61	Pn832	JOG Acceleration Time	1 to 10,000	ms	Immediate	100	B
	#62	Pn833	JOG Deceleration Time	1 to 10,000	ms	Immediate	100	C
	#63	Pn834	JOG Switch Speed	1 to 240,000	× 1,000 steps/min	Immediate	12,000	C
	#64	Pn835	JOG Second Acceleration/Deceleration Time	1 to 10,000	ms	Immediate	200	C
	#65	Pn836	JOG Acceleration/ Deceleration Type	0 to 3	–	Immediate	0	B
	#70	Pn840	Time Constant for Exponential Curve	4 to 1,000	ms	Immediate	25	C
	#71	Pn841	Bias Speed	0 to 240,000	× 1,000 steps/min	Immediate	0	C
	#72	Pn842	Time Constant of Moving Average	4 to 1,000	ms	Immediate	25	C
	#73	Pn843	Maximum Speed	1 to 240,000	× 1,000 steps/min	Immediate	24,000	B
	#74	Pn844	Step Distance 1	0 to 99,999,999	Steps	Immediate	1	B
	#75	Pn845	Step Distance 2	0 to 99,999,999	Steps	Immediate	10	B
	#76	Pn846	Step Distance 3	0 to 99,999,999	Steps	Immediate	100	B
	#77	Pn847	Step Distance 4	0 to 99,999,999	Steps	Immediate	1,000	B

Note 1. "Steps" means "command unit." For command unit details, refer to *5.3.1 Unit Parameters*.

2. If you set the command unit to 0.001 mm, 1,000 steps/min becomes mm/min.

5.2.5 Positioning Parameters

The positioning parameter table is shown below.

Object	Attribute	No.	Name	Range	Units	Effective Timing	Default Value	Type
0x64	#90	Pn850	Positioning Completion Range	0 to 10,000	Steps	Immediate	5	A
	#91	Pn851	Positioning Monitor Time	0 to 65,535	ms	Immediate	0	A
	#92	Pn852	Positioning Near Range	0 to 32,767	Steps	Immediate	10	B
	#93	Pn853	Direction	0, 1	–	Immediate	0	B
	#94	Pn854	Interrupt Feeding Positioning Speed	1 to 240,000	× 1,000 steps/min	Immediate	24,000	B
	#95	Pn855	Interrupt Feeding Distance	± 99,999,999	Steps	Immediate	0	B
	#96	Pn856	Interrupt Feeding Function Selection	0, 1	–	Power-up	0	B
	#100	Pn85A	Station	1 to 32,767	–	Immediate	1	B

Note 1. "Steps" means "command unit." For command unit details, refer to *5.3.1 Unit Parameters*.

2. If you set the command unit to 0.001 mm, 1,000 steps/min becomes mm/min.

5

5.2.6 Multi-speed Positioning Parameters

A table of multi-speed positioning parameters is shown below.

Object	Attribute	No.	Name	Range	Units	Effective Timing	Default Value	Type
0x64	#111	Pn861	Speed Switch Point	0 to 16	–	Immediate	0	C
	#112	Pn862	Multi-speed Positioning Initial Speed	1 to 240,000	× 1,000 steps/min	Immediate	24,000	C
	#113	Pn863	Position 1 for Multi-speed	0 to 99,999,999	Steps	Immediate	0	C
	#114	Pn864	Position 2 for Multi-speed	0 to 99,999,999	Steps	Immediate	0	C
	#115	Pn865	Position 3 for Multi-speed	0 to 99,999,999	Steps	Immediate	0	C
	#116	Pn866	Position 4 for Multi-speed	0 to 99,999,999	Steps	Immediate	0	C
	#117	Pn867	Position 5 for Multi-speed	0 to 99,999,999	Steps	Immediate	0	C
	#118	Pn868	Position 6 for Multi-speed	0 to 99,999,999	Steps	Immediate	0	C
	#119	Pn869	Position 7 for Multi-speed	0 to 99,999,999	Steps	Immediate	0	C
	#120	Pn86A	Position 8 for Multi-speed	0 to 99,999,999	Steps	Immediate	0	C
	#121	Pn86B	Position 9 for Multi-speed	0 to 99,999,999	Steps	Immediate	0	C

(cont'd)

Object	Attribute	No.	Name	Range	Units	Effective Timing	Default Value	Type
0x64	#122	Pn86C	Position 10 for Multi-speed	0 to 99,999,999	Steps	Immediate	0	C
	#123	Pn86D	Position 11 for Multi-speed	0 to 99,999,999	Steps	Immediate	0	C
	#124	Pn86E	Position 12 for Multi-speed	0 to 99,999,999	Steps	Immediate	0	C
	#125	Pn86F	Position 13 for Multi-speed	0 to 99,999,999	Steps	Immediate	0	C
	#126	Pn870	Position 14 for Multi-speed	0 to 99,999,999	Steps	Immediate	0	C
	#127	Pn871	Position 15 for Multi-speed	0 to 99,999,999	Steps	Immediate	0	C
	#128	Pn872	Position 16 for Multi-speed	0 to 99,999,999	Steps	Immediate	0	C
	#129	Pn873	Speed 1 for Multi-speed	1 to 240,000	× 1,000 steps/min	Immediate	24,000	C
	#130	Pn874	Speed 2 for Multi-speed	1 to 240,000	× 1,000 steps/min	Immediate	24,000	C
	#131	Pn875	Speed 3 for Multi-speed	1 to 240,000	× 1,000 steps/min	Immediate	24,000	C
	#132	Pn876	Speed 4 for Multi-speed	1 to 240,000	× 1,000 steps/min	Immediate	24,000	C
	#133	Pn877	Speed 5 for Multi-speed	1 to 240,000	× 1,000 steps/min	Immediate	24,000	C
	#134	Pn878	Speed 6 for Multi-speed	1 to 240,000	× 1,000 steps/min	Immediate	24,000	C
	#135	Pn879	Speed 7 for Multi-speed	1 to 240,000	× 1,000 steps/min	Immediate	24,000	C
	#136	Pn87A	Speed 8 for Multi-speed	1 to 240,000	× 1,000 steps/min	Immediate	24,000	C
	#137	Pn87B	Speed 9 for Multi-speed	1 to 240,000	× 1,000 steps/min	Immediate	24,000	C
	#138	Pn87C	Speed 10 for Multi-speed	1 to 240,000	× 1,000 steps/min	Immediate	24,000	C
	#139	Pn87D	Speed 11 for Multi-speed	1 to 240,000	× 1,000 steps/min	Immediate	24,000	C
	#140	Pn87E	Speed 12 for Multi-speed	1 to 240,000	× 1,000 steps/min	Immediate	24,000	C
	#141	Pn87F	Speed 13 for Multi-speed	1 to 240,000	× 1,000 steps/min	Immediate	24,000	C
	#142	Pn880	Speed 14 for Multi-speed	1 to 240,000	× 1,000 steps/min	Immediate	24,000	C
	#143	Pn881	Speed 15 for Multi-speed	1 to 240,000	× 1,000 steps/min	Immediate	24,000	C
	#144	Pn882	Speed 16 for Multi-speed	1 to 240,000	× 1,000 steps/min	Immediate	24,000	C

Note 1. "Steps" means "command unit." For command unit details, refer to *5.3.1 Unit Parameters*.

2. If you set the command unit to 0.001 mm, 1,000 steps/min becomes mm/min.

5.2.7 Notch Output Parameters

The notch output parameter table is shown below.

Object	Attribute	No.	Name	Range	Units	Effective Timing	Default Value	Type
0x64	#160	Pn890	Notch Signal Position Designation	0, 1	–	Immediate	0	C
	#161	Pn891	Notch Signal	0 to 3	–	Immediate	0	C
	#162	Pn892	Negative Direction Notch 1	± 99,999,999	Steps	Immediate	0	C
	#163	Pn893	Positive Direction Notch 1	± 99,999,999	Steps	Immediate	0	C
	#164	Pn894	Negative Direction Notch 2	± 99,999,999	Steps	Immediate	0	C
	#165	Pn895	Positive Direction Notch 2	± 99,999,999	Steps	Immediate	0	C

Note 1. "Steps" means "command unit." For command unit details, refer to *5.3.1 Unit Parameters*.

2. If you set the command unit to 0.001 mm, 1,000 steps/min becomes mm/min.

5.2.8 Point Table Parameter

The table of point table parameters for target positions and speeds used when the point table operation is commanded is shown below.

5

Object	Attribute	No.	Name	Range	Units	Effective Timing	Default Value	Type
0x65	#50	Pn900	Position_1	± 99,999,999	Steps	Immediate	0	B
	#51	Pn901	Position_2	± 99,999,999	Steps	Immediate	0	B
	:	:	:	:	:	:	:	:
	#99	Pn931	Position_50	± 99,999,999	Steps	Immediate	0	B
	#150	Pn940	Speed_1	1 to 240,000	× 1,000 steps/min	Immediate	24,000	B
	#151	Pn941	Speed_2	1 to 240,000	× 1,000 steps/min	Immediate	24,000	B
	:	:	:	:	:	:	:	:
	#199	Pn971	Speed_50	1 to 240,000	× 1,000 steps/min	Immediate	24,000	B

Note 1. "Steps" means "command unit." For command unit details, refer to *5.3.1 Unit Parameters*.

2. If you set the command unit to 0.001 mm, 1,000 steps/min becomes mm/min.

5.3 Parameter Details

5.3.1 Unit Parameters

The unit for performing positioning using a DeviceNet Unit is determined by the following two parameters.

Object	Attribute	No.	Name	Range	Units	Effective Timing	Default Value	Type
0x64	#30	Pn810	Electronic Gear Ratio G1 (Numerator)	1 to 10,000,000	–	Power-up	1	B
	#31	Pn811	Electronic Gear Ratio G2 (Denominator)	1 to 10,000,000	–	Power-up	1	B

The electronic gear function can be used to set the position command units equal to the amount of encoder pulses. The host controller can generate position commands in more familiar user-defined units such as millimeters or inches.

■ Not Using the Electronic Gear

If not using the electronic gear, set Pn810 and Pn811 to 1. This will set the command unit to 1 pulse, so you must calculate the scale position units using the host controller.

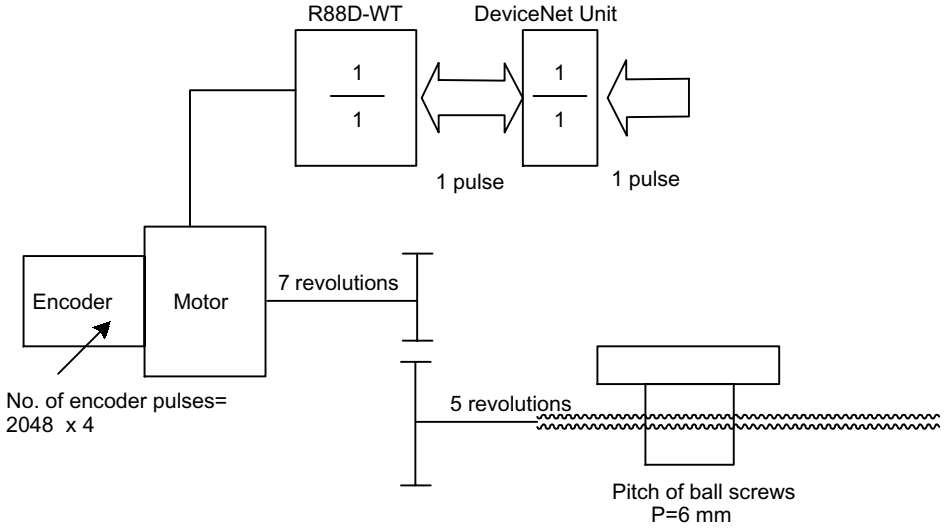

■ Electronic Gear Settings When Using a Ball Screw

If using a ball screw, first check the following specifications.

- Number of encoder pulses
- Gear ratio
- Ball screw pitch

The following system example shows the formulas when the command unit is set to 0.001 mm.

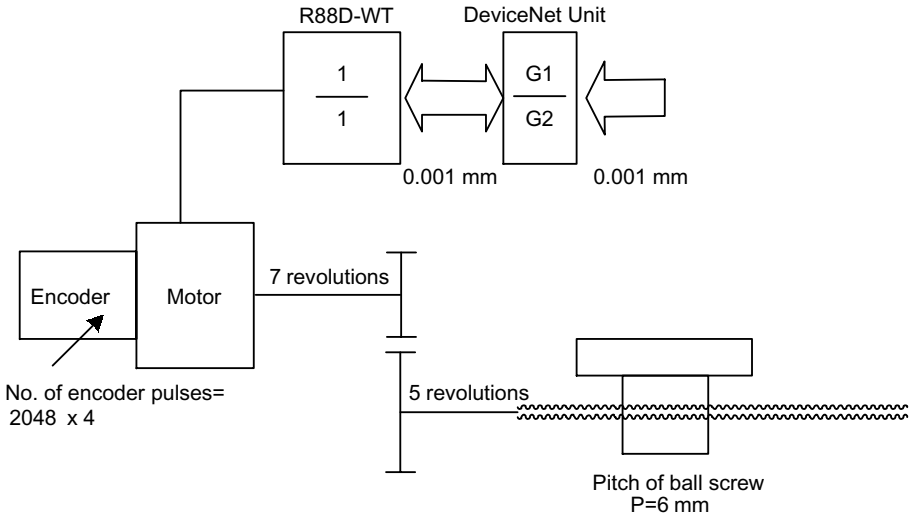

$$\text{Moving distance of load per revolution (command unit)} = \frac{\text{Moving distance of load per revolution (mm)}}{\text{command unit (mm)}} = \frac{6\ \text{mm}}{0.001\ \text{mm}} = 6000$$

G2 = [Moving distance of load per revolution (command unit)] × [Gear ratio (load rev.)] = 6000 × 5 = 30000

G1 = (Encoder pulses) × (Pulse multiplier) × [Gear ratio (motor rev.)] = 2048 × 4 × 7 = 57344

G1/G2 = 57344/30000 = 1.911 · · ·

Data ranges are shown below.

G2 ≤ 10,000,000

G1 ≤ 10,000,000

0.01 ≤ G1/G2 ≤ 100

By storing the value of G2 in Pn811 and the value of G1 in Pn810, you can use the Electronic Gear function. These parameters are enabled when the power is turned ON. After you have changed the parameter, execute the Unit Reset Command or the Reset Service to the Identity Object.

Note 1. The command unit explained in *Electronic Gear Settings When Using a Ball Screw* is based on a unit of 0.001 mm. The speed and other parameters must be interpreted as follows:
Pn821: Speed [× 1,000 steps/min]→[mm/min]

2. Setting G1/G2 outside the range 0.01 to 100 may result in a misoperation. Make sure to set G1 and G2 within this range.

■ Electronic Gear Settings when Using a Rotary Table

If using a rotary table, first check the following specifications.

- Number of encoder pulses
- Gear ratio

The following system example shows the formulas when the command unit is set to 0.001°.

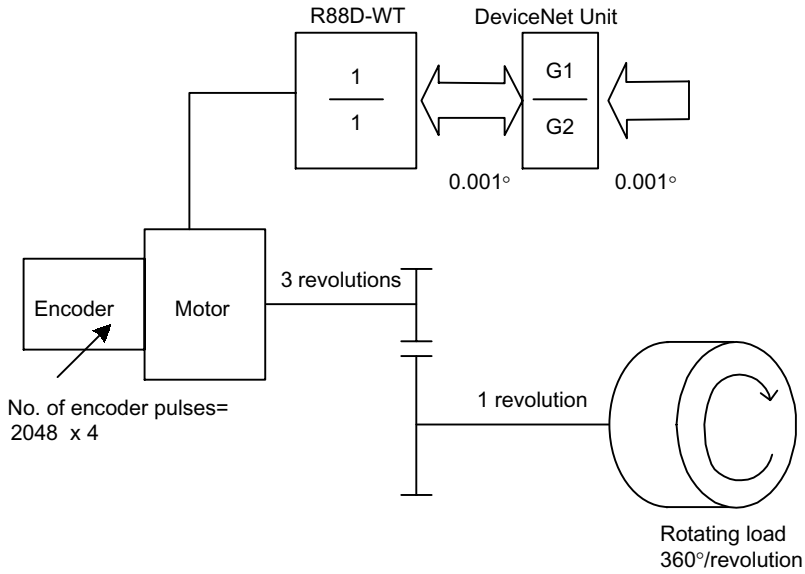

Moving distance of load per revolution (command unit) = 360°/ 0.001° = 36000

G2 = [Moving distance of load per revolution (command unit)] ×
[Gear Ratio (load rev.)] = 36000 × 1 = 36000

G1 = (Encoder pulses) × (Pulse multiplier) × [Gear Ratio (motor rev.)]
= 2048 × 4 × 3 = 24576

Data ranges are shown below.

G2 ≤ 10,000,000

G1 ≤ 10,000,000

0.01 ≤ G1/G2 ≤ 100

By storing the value of G2 in Pn811 and the value of G1 in Pn810, you can use the Electronic Gear function. These parameters are enabled when the power is turned ON. After you have changed the parameter, execute the Unit Reset Command or the Reset Service to the Identity Object.

Note Setting G1/G2 outside the range 0.01 to 100 may result in a misoperation. Make sure to set G1 and G2 within this range.

5.3.2 Origin Search Parameters

This section provides origin search types and their parameter details.

■ Origin Search Types

The following seven types of origin search are supported.

Type 0

This origin search type returns to the origin using the origin proximity input signal (ORG signal) and the phase Z pulse of the encoder. The outline of the operation is as follows:

1. The axis travels in the direction specified as the origin search direction in the Origin Search Function Selection (Pn801) at the Origin Search High Speed (Pn802).
2. When the status of the origin proximity input signal changes, the axis decelerates and travels at the Origin Search Proximity Speed (Pn803).
3. After the status of the origin proximity input signal changes again, the axis decelerates further when the first encoder phase Z pulse is detected and then travels at the Origin Search Compensation Speed (Pn804).
4. The axis travels the Origin Compensation Value (Pn805) from the position where the phase Z was detected, and that position becomes the origin.

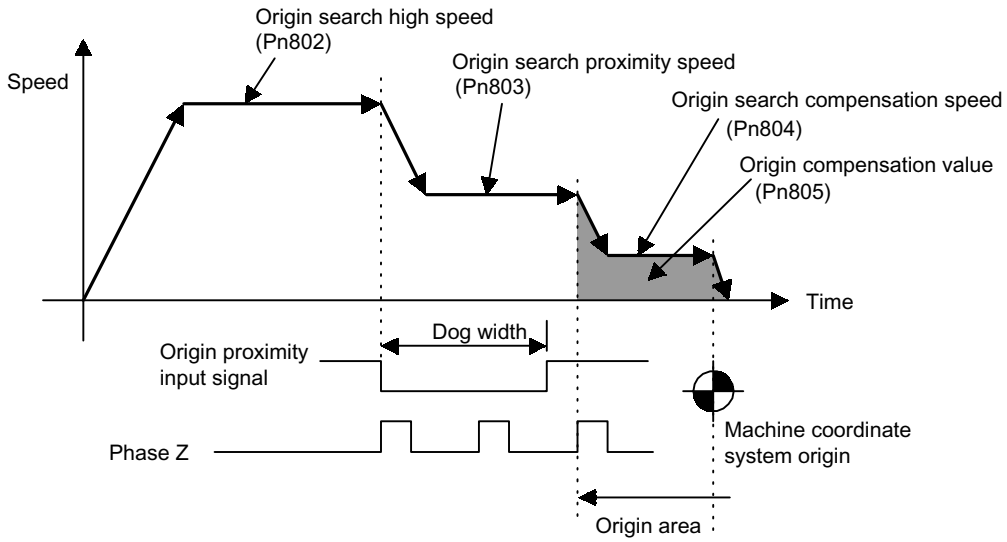

Type 1

This origin search type returns to the origin using the origin input signal (ZERO signal). The outline of the operation is as follows:

1. The axis travels in the direction specified as the origin search direction in the Origin Search Function Selection (Pn801) at the Origin Search Proximity Speed (Pn803).
2. When the origin input signal status changes, the axis decelerates, and travels at the Origin Search Compensation Speed (Pn804).
3. The axis travels the Origin Compensation Value (Pn805) from the position that the origin input signal status changed, and that position becomes the origin.

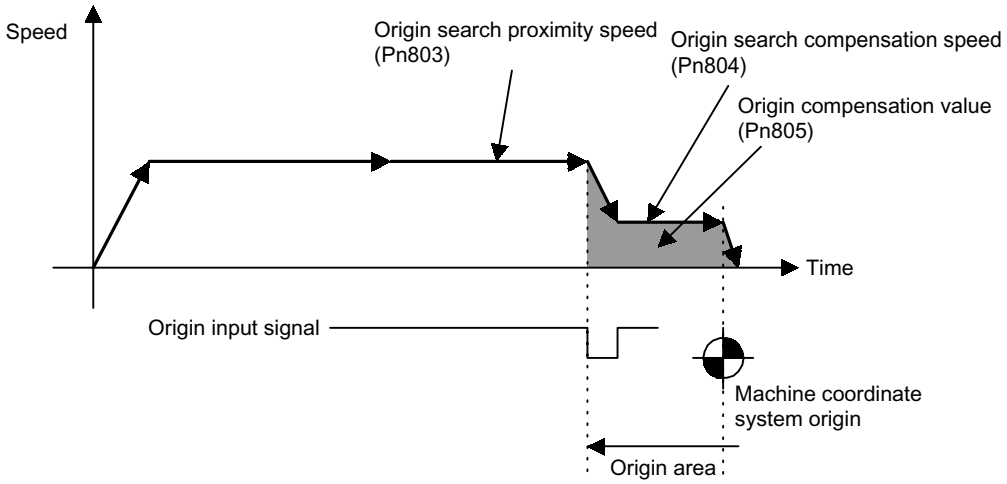

Type 2

This origin search type returns to the origin using the origin proximity input signal (ORG signal) and the origin input signal (ZERO signal). The outline of the operation is as follows:

1. The axis travels in the direction specified as origin search direction in the Origin Search Function Selection (Pn801) at the Origin Search High Speed (Pn802).
2. When the status of the origin proximity input signal changes, the axis decelerates, and travels at the Origin Search Proximity Speed (Pn803).
3. When the origin input signal changes after the status of the origin proximity input signal changes again, the axis decelerates further and travels at the Origin Search Compensation Speed (Pn804).
4. The axis travels the Origin Compensation Value (Pn805) from the position where the origin input signal status changed, and that position becomes the origin.

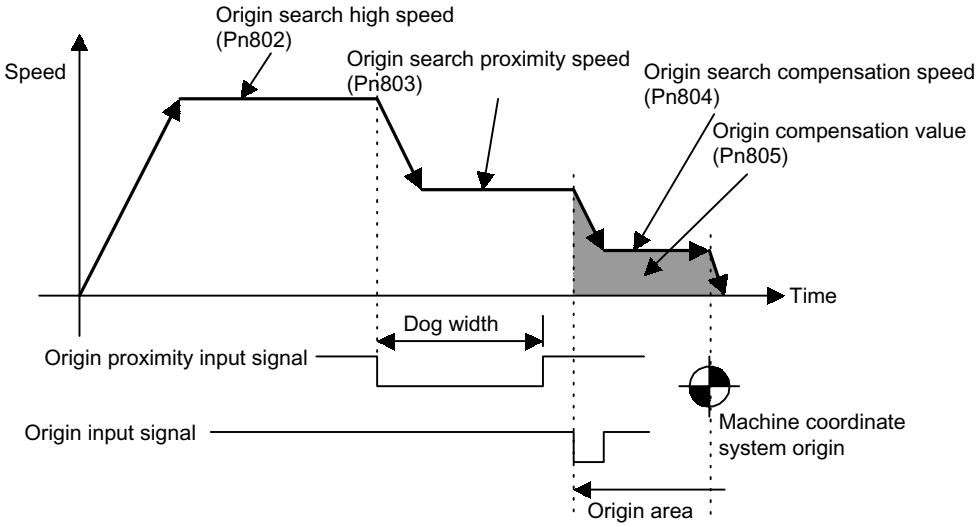

Type 3

This origin search type returns to the origin using the phase Z pulse of the encoder only. The outline of the operation is as follows:

1. The axis travels in the direction specified as origin search direction in the Origin Search Function Selection (Pn801) at the Origin Search Proximity Speed (Pn803).
2. When the first phase Z pulse of the encoder is detected, the axis decelerates, and travels at the Origin Search Compensation Speed (Pn804).
3. The axis travels the Origin Compensation Value (Pn805) from the position where the phase Z pulse was detected, and that position becomes the origin.

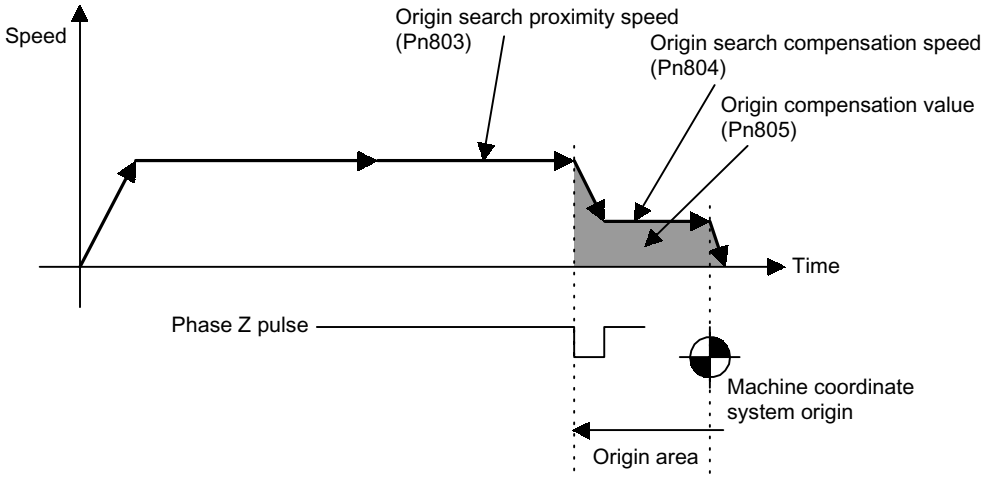

Type 4

This origin search type returns to the origin using the origin proximity input signal (ORG signal) and the phase Z pulse of the encoder. The axis travels in the reverse direction when the limit input signal of the origin search direction is input. The outline of the operation is the same as Type 0.

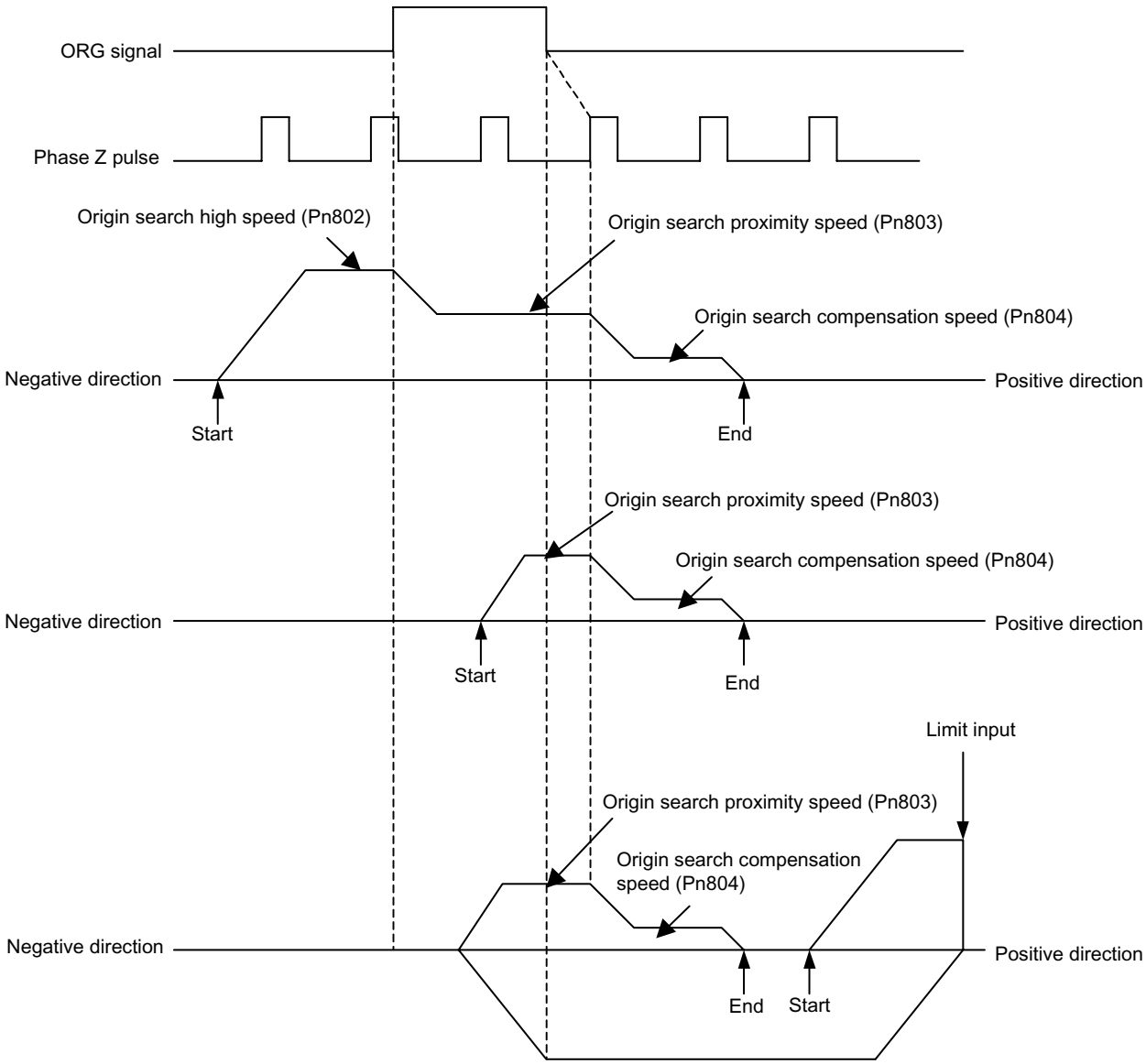

Type 5

This origin search type returns to the origin using the origin input signal only. The axis travels in the reverse direction when the limit input signal of the origin search direction is input. The outline of the operation is the same as Type 1.

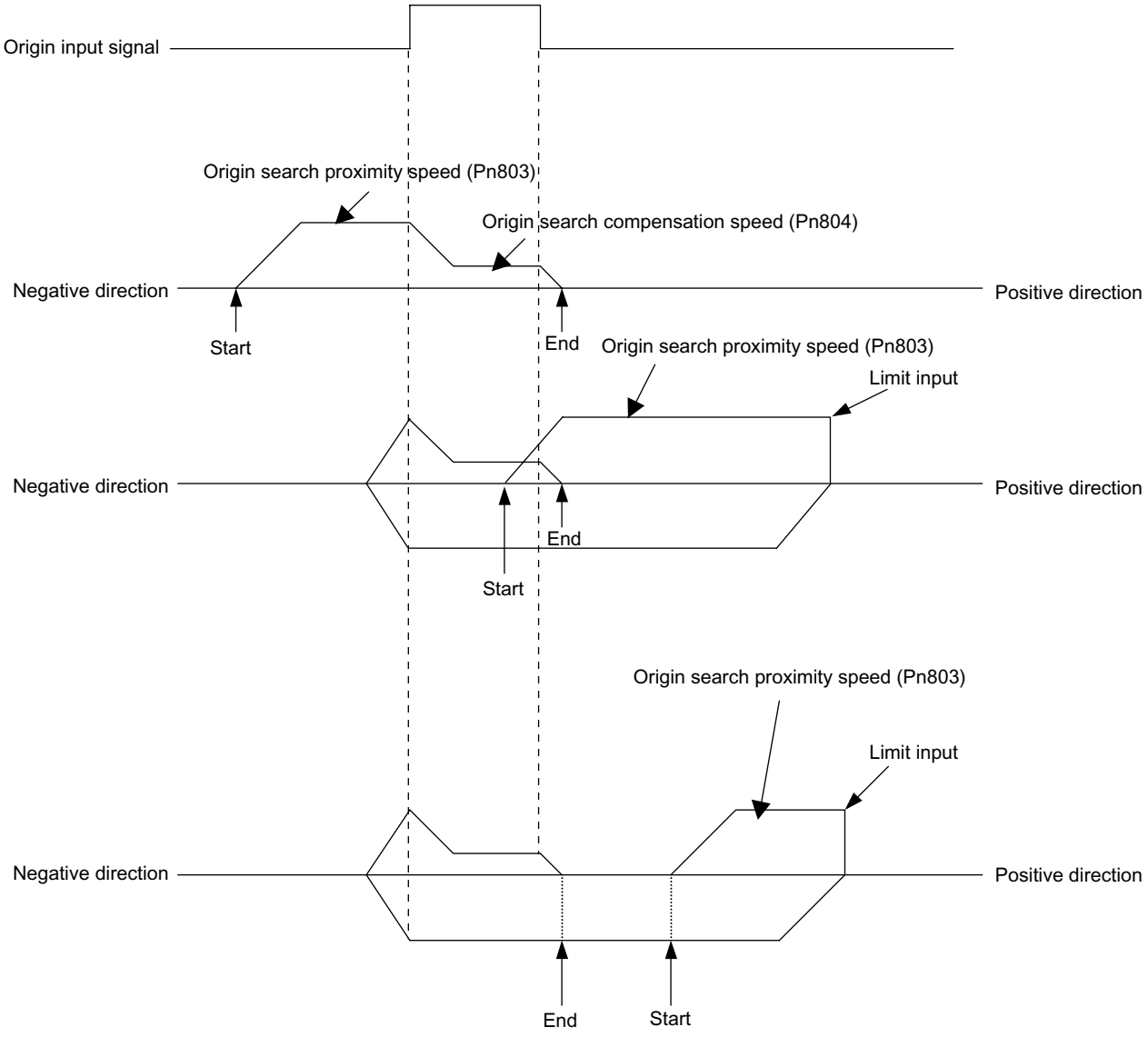

Type 6

This origin search type returns to the origin using the origin proximity input signal (ORG signal) and the origin input signal (ZERO signal). The axis travels in the reverse direction when the limit input signal of the origin search direction is input. The outline of the operation is the same as the Type 2.

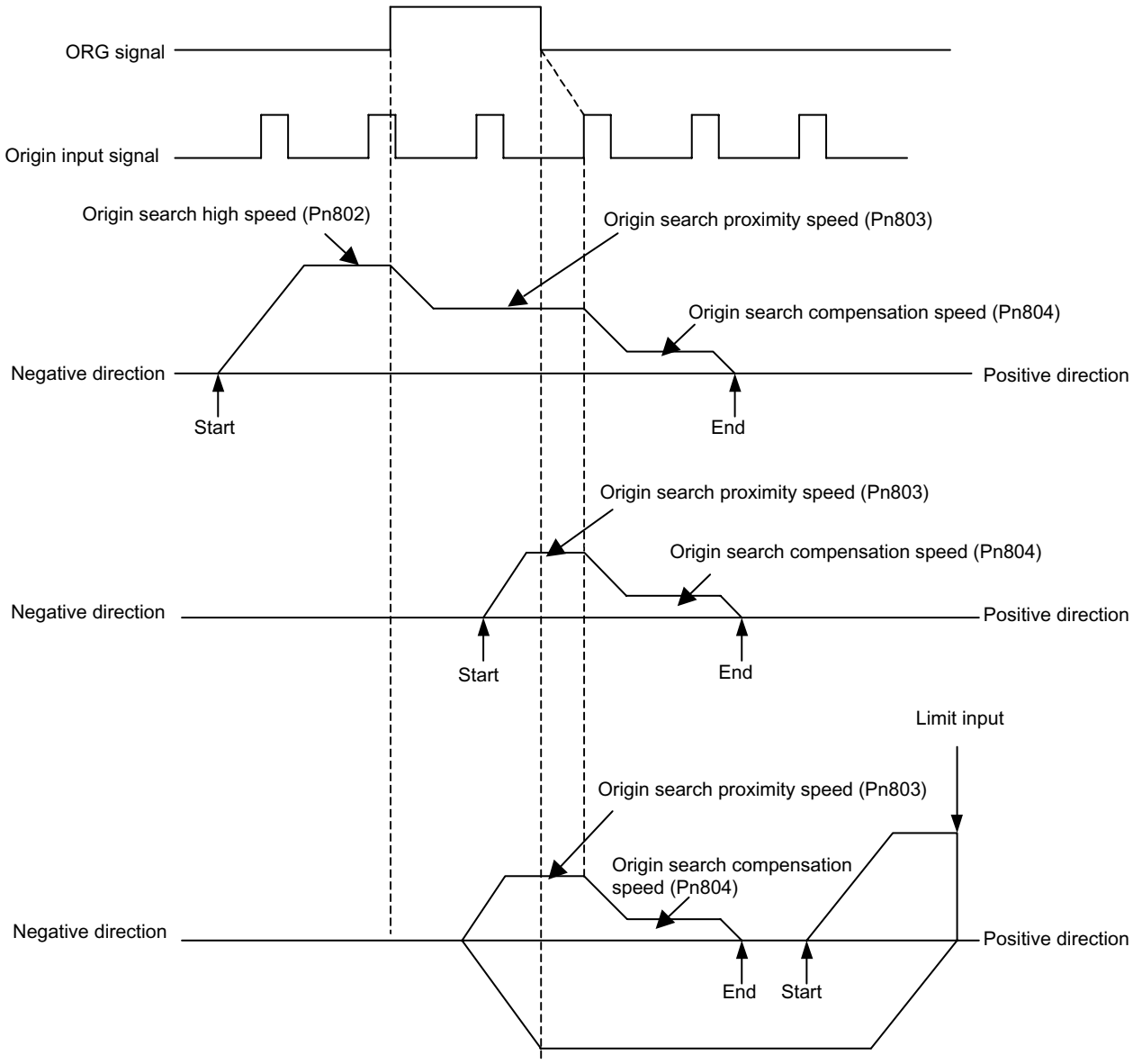

Note When the setting for the Origin Compensation Value (Pn805) is small (when the distance is shorter than the distance required for the deceleration from proximity speed), the axis will travel past the origin and then return to it from the other direction.

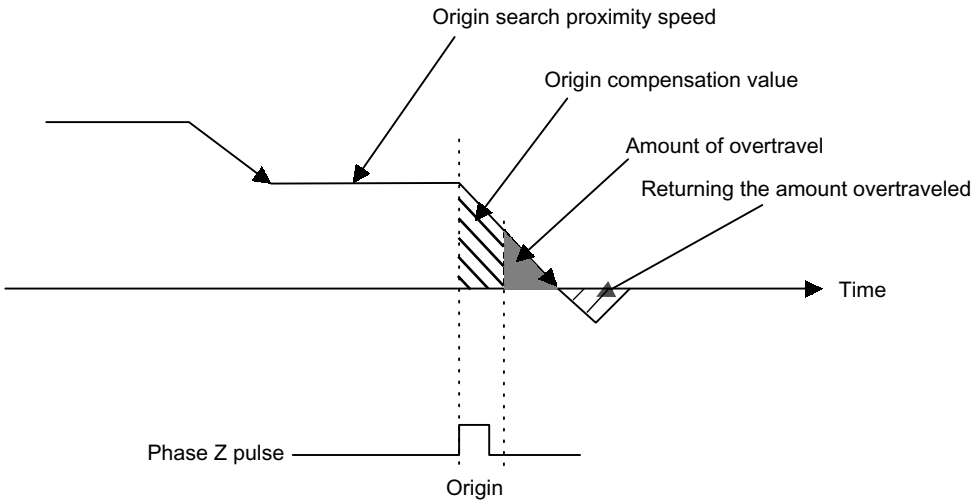

■ Parameter Details

The details of parameters relating to origin search are shown below.

Origin Search Mode (Object: 0x64, Attribute: #10; Pn800)

The origin search type is specified in the Origin Search Mode.

Origin Search Mode	Origin Search Type
0	3-step deceleration using origin proximity input signal and phase Z pulse
1	Double-step deceleration using origin input signal
2	3-step deceleration using origin proximity input signal and origin input signal
3	Double-step deceleration using phase Z pulse
4	3-step deceleration using origin proximity input signal and phase Z pulse Reverse operation at limit input in origin search direction
5	Double-step deceleration using origin input signal Reverse operation at limit input in origin search direction
6	3-step deceleration using origin proximity input signal and origin input signal Reverse operation at limit input in origin search direction

Origin Search Function Selection (Object: 0x64, Attribute: #11; Pn801)

The Origin Search Function Selection has the following bit settings.

Bit	Name	Description
0	Origin Search Direction Setting	0: Positive direction 1: Negative direction
1	Origin Proximity Input Signal Setting	0: Enabled on Low 1: Enabled on High
2	Origin Input Signal Setting	0: Enabled on falling edge 1: Enabled on rising edge
3 to 15	Reserved	–

Origin Search High Speed (Object: 0x64, Attribute: #12; Pn802)

Use the Origin Search High Speed to set the initial speed for 3–step deceleration origin search.

The setting unit is [×1,000 steps/min].

Origin Search Proximity Speed (Object: 0x64, Attribute: #13; Pn803)

Use the Origin Search Proximity Speed to set the proximity speed for origin search. The setting unit is [×1,000 steps/min].

Origin Search Compensation Speed (Object: 0x64, Attribute: #14; Pn804)

Use the Origin Search Compensation Speed to set the compensation speed for origin search. The setting unit is [×1,000 steps/min].

Origin Compensation Value (Object: 0x64, Attribute: #15; Pn805)

Use the Origin Compensation Value to set the distance from the position where the encoder phase Z and origin input signal were detected to the machine origin. The setting unit is [steps].

Zero Position Output Width (Object: 0x64, Attribute:#16; Pn806)

Use the Zero Position Output Width to set the area that will be regarded as the origin. The setting unit is [steps].

In the following diagram, if the conditions outlined below are met, the Origin Flag in the response data will be set to 1.

- X = | Origin point - Present position | ≤ Pn806

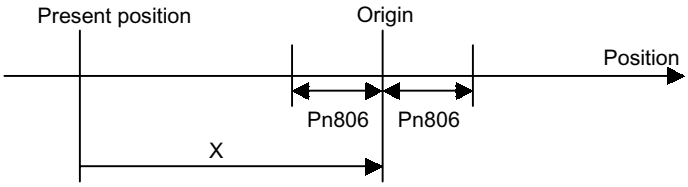

Absolute Position Setting (Object: 0x64, Attribute: #17; Pn809)

The system automatically writes to the Absolute Position Setting the value of the offset from the origin on the encoder when the origin setting in the absolute value detection system has been completed. Normally, this parameter does not need to be set.

When using an absolute value detection system, set this value to enable adjustment of the origin.

Origin Search Acceleration/Deceleration Time (Object: 0x64, Attribute: #18; Pn80A)

Use the Origin Search Acceleration/Deceleration Time to set the acceleration/declaration time constant used during origin search. The setting unit is ms. Single–step linear acceleration/deceleration is used for origin search. Refer to *5.3.4 Speed, Acceleration, and Deceleration* for information on this acceleration/deceleration type.

5.3.3 Machine System and Peripheral Devices

The details of parameters relating to the machine system and peripheral devices are shown below.

Coordinate Type (Object: 0x64, Attribute: #32; Pn812)

Use the Coordinate Type to set whether to use the DeviceNet Unit as a linear axis or rotary axis.

Pn812	Description
0	The linear axis is designated. The unit of present value: steps
1	The rotary axis is designated. The unit of present value: steps

Command Unit/R
(Object: 0x64, Attribute: #33; Pn813)

Use the Command Unit/R to set the command unit for one machine rotation. This parameter is enabled only when the Coordinate Type is set to rotary axis. If this parameter is not set correctly, when the machine performs a 360° rotation, the present position will not be reset to 0°, so be careful.

The setting unit is [steps]. The initial value is 360,000.

Backlash Compensation Value
(Object: 0x64, Attribute: #34; Pn814)

Use the Backlash Compensation Value to set the amount of compensation when backlash compensation is used. The setting unit is [steps].

Backlash Compensation Direction
(Object: 0x64, Attribute: #35; Pn815)

Use the Backlash Compensation Direction to set the direction of the backlash compensation.

Normally, set this parameter in the opposite direction of the direction immediately before completion of the origin search.

Pn815	Description
0	Positive Direction
1	Negative Direction

Positive Software Limit
(Object: 0x64, Attribute: #36; Pn816)

Use the Positive Software Limit to set the software limit in the positive direction. The setting unit is [steps]. Make the setting between -99,999,999 and 99,999,999.

Negative Software Limit
(Object: 0x64, Attribute: #37; Pn817)

Use the Negative Software Limit to set the software limit in the negative direction. The setting unit is [command unit]. Make the setting between -99,999,999 and 99,999,999.

Function Selection (Object: 0x64, Attribute: #38; Pn818)

Use the Function Selection to set whether or not to use the software limit functions and the backlash compensation value functions.

Note: If a position command is received that exceeds a software limit (except for jogging), a deceleration stop will be made at the software limit. If the origin has not been set, the software limits will not be valid even if they have valid settings.

Table 5.4 Software Limit Function Selection

Bit 0	Description
0	Disabled.
1	Enabled.

Table 5.5 Backlash Compensation Function Selection

Bit 1	Description
0	Disabled.
1	Enabled.

Limit Input Signal Function Selection (Object: 0x64, Attribute: #39; Pn819)

Use the Limit Input Signal Fuction Selection to set whether or not to use the limit input function and to set the signal polarity.

Bit	Name	Description
0	Enable/Disable Limit Input	0: Disabled 1: Enabled
1	Limit Input Signal Polarity	0: Enabled on Low 1: Enabled on High
2 to 15	Reserved	–

Limit Input Action Selection (Object: 0x64, Attribute: #40; Pn81A)

Use the Limit Input Action Selection to set the operation of the DeviceNet Unit when a limit input status is detected.

Table 5.6 Limit Input Action Selection

Pn81A	Description
0	Servo OFF
1	Emergency Stop: Stops at the specified maximum torque.
3 to 255	Reserved

Emergency Stop Function Selection (Object: 0x64, Attribute: #41: Pn81B)

Use the Emergency Stop Function Selection to set whether or not to use the emergency stop function and to set the polarity of the signal.

Note: Emergency stop and servo OFF are performed when the emergency stop signal is input.

Bit	Name	Description
0	Enable/disable Emergency Stop	0: Disabled 1: Enabled
1	Emergency Stop Signal Polarity	0: Enabled on Low 1: Enabled on High
2 to 15	Reserved	–

Emergency Stop Action (Object: 0x64, Attribute: #42; Pn81C)

Use the Emergency Stop Action to set the operation when the emergency stop signal is input.

Pn81C	Description
0	Emergency stop and servo OFF

5.3.4 Speed, Acceleration, and Deceleration

This section provides acceleration and deceleration patterns, speeds, and parameter details.

■ Acceleration and Deceleration Patterns

The following acceleration and deceleration patterns are possible by combining acceleration/deceleration types (Pn826 or Pn836) and filter selection (Pn829).

Table 5.7 Acceleration and Deceleration Patterns

		Acceleration/Deceleration Type (Pn826 or Pn836)			
		0: None	1: Single–step Linear	2: Double–step Linear	3: Asymmetric
Filter Selection (Pn829)	0: None	No acceleration and deceleration	①Single–step Linear Accel/Decel Constant Accel/ Decel*1	②Double–step Linear Accel/Decel Constant Accel/ Decel*1	③Asymmetric Linear Accel/Decel Constant Accel/ Decel*1
	1: Exponent	④Exponential Accel/ Decel Constant Accel/Decel time*2	–	–	–
	2: Exponent with Bias	⑤Exponential Accel/ Decel with Bias Constant Accel/Decel time*2	–	–	–
	3: Moving Average	⑥Single-step Linear Accel/Decel Constant Accel/Decel time*2	⑦S-curve Accel/Decel Constant Accel/ Decel*1	–	⑧Asymmetric S–curve Accel/Decel Constant Accel/ Decel*1

* 1. With Constant Accel/Decel, the time required for acceleration and deceleration changes with feeeding speed changes.
* 2. With Constant Accel/Decel time, the time required for acceleration and deceleration does not change even if the feeding speed changes.

Note Combinations for the "–"(hyphen) may result in incorrect acceleration and deceleration.

①Single-step Linear Acceleration/Deceleration with Constant Acceleration/Deceleration

With single-step linear acceleration/deceleration, the rate of acceleration/deceleration is determined by the Maximum Speed set in parameter Pn843 and the Acceleration Time set in parameter Pn822.

The time T required to reach the Speed set in parameter Pn821 in the positioning operation can be calculated using the following formula.

T [ms] = Pn822 × (Pn821/Pn843)

If this acceleration/deceleration pattern is used, the rate of acceleration/deceleration will remain constant even if the Speed set in Pn821 is changed.

Table 5.8 Related Parameters

Object	Attribute	No.	Name
0x64	56	Pn826	Acceleration/Deceleration Type (= 1)
	58	Pn829	Filter Selection (= 0)
	51	Pn821	Speed [×1,000 steps/min]
	52	Pn822	Acceleration Time
	73	Pn843	Maximum Speed [×1,000 steps/min]

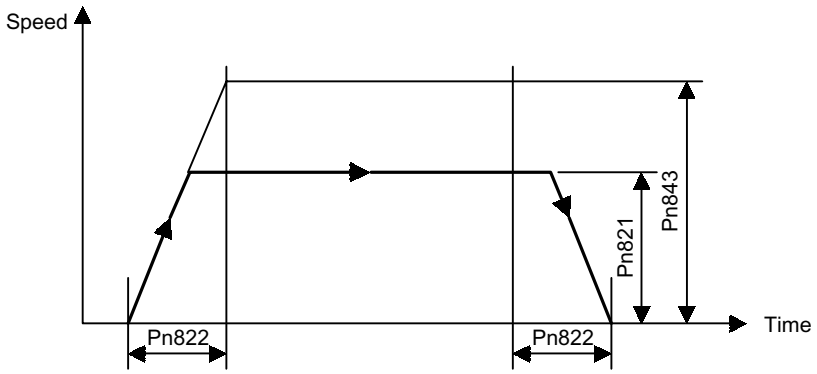

Fig. 5.1 Single-step Linear Acceleration/Deceleration with Constant Acceleration/Deceleration

②Double-step Linear Acceleration/Deceleration with Constant Acceleration/Deceleration

With double-step linear acceleration/deceleration, the rate of acceleration/deceleration changes at the Switch Speed set in parameter Pn824.

In the first step of acceleration/deceleration, the rate of acceleration/deceleration is determined by the Maximum Speed set in parameter Pn843 and the Acceleration Time set in parameter Pn822. In the second step, the rate of acceleration/deceleration is determined by the difference between the Maximum Speed set in parameter Pn843 and the Switch Speed set in parameter Pn824 along with the Second Acceleration/Deceleration Time set in parameter Pn825.

The time T required to reach the constant speed in the positioning operation can be calculated using the following formulas.

T1 [ms] = Pn822 × (Pn824/Pn843)

T2 [ms] = Pn825 × (Pn821 - Pn824)/(Pn843 - Pn824)

T [ms] = T1 + T2

If this acceleration/deceleration pattern is used, the rate of acceleration/deceleration will remain constant even if the Speed set in Pn821 is changed.

Table 5.9 Related Parameters

Object	Attribute	No.	Name
0x64	56	Pn826	Acceleration/Deceleration Type (= 2)
	58	Pn829	Filter Selection (= 0)
	51	Pn821	Speed [×1,000 steps/min]
	52	Pn822	Acceleration Time [ms]
	54	Pn824	Switch Speed [×1,000 steps/min]
	55	Pn825	Second Acceleration/Deceleration Time [ms]
	73	Pn843	Maximum Speed [×1,000 steps/min]

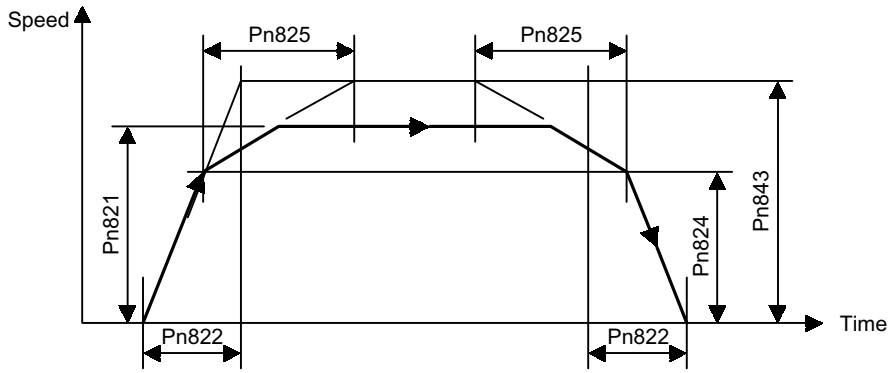

Fig. 5.2 Double-step Linear Acceleration/Deceleration with Constant Acceleration/Deceleration

③Asymmetric Linear Acceleration/Deceleration with Constant Acceleration/Deceleration

With asymmetric linear acceleration/deceleration, the linear acceleration/deceleration described in ①, is used, but separate rates can be set for acceleration and deceleration.

For deceleration, for example, the time T required to stop from the Speed set in parameter Pn821 in a positioning operation can be calculated using the following formula.

T [ms] = Pn823 × (Pn821/Pn843)

If this acceleration/deceleration pattern is used, the rates of acceleration/deceleration will remain constant even if the Speed set in Pn821 is changed.

Table 5.10 Related Parameters

Object	Attribute	No.	Name
0x64	56	Pn826	Acceleration/Deceleration Type (= 3)
	58	Pn829	Filter Selection (= 0)
	51	Pn821	Speed [×1,000 steps/min]
	52	Pn822	Acceleration Time [ms]
	53	Pn823	Deceleration Time [ms]
	73	Pn843	Maximum Speed [×1,000 steps/min]

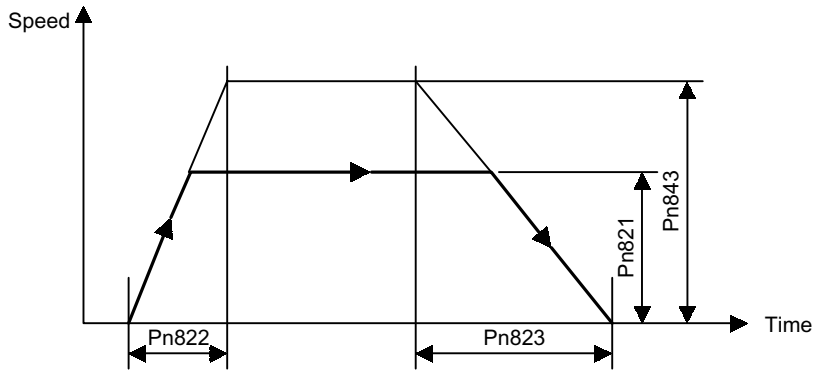

Fig. 5.3 Asymmetric Linear Acceleration/Deceleration with Constant Acceleration/Deceleration

④Exponential Acceleration/Deceleration with Constant Acceleration/ Deceleration Time

With exponential acceleration/deceleration, the rate of acceleration/deceleration is determined by the Speed set in parameter Pn821 and the Time Constant for Exponential Curve set in parameter Pn840. The Time Constant for Exponential Curve set in Pn840 is set to the time required to reach 63.2% of the Speed set in Pn821.

If this acceleration/deceleration pattern is used, the time of acceleration/deceleration will remain constant even if the Speed set in Pn821 is changed.

Table 5.11 Related Parameters

Object	Attribute	No.	Name
0x64	56	Pn826	Acceleration/Deceleration Type (= 0)
	58	Pn829	Filter Selection (= 1)
	51	Pn821	Speed [×1,000 steps/min]
	70	Pn840	Time Constant for Exponential Curve [ms]

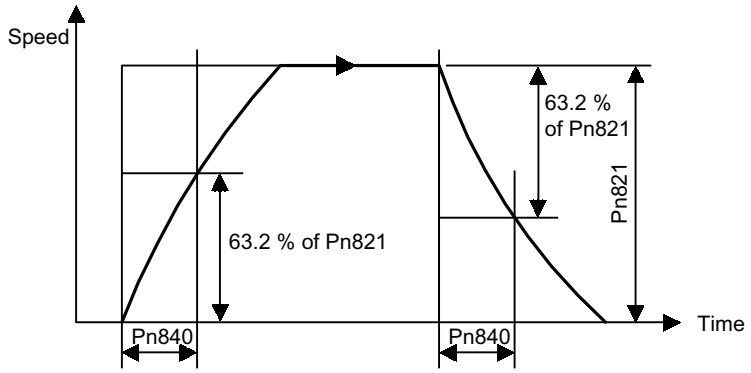

Fig. 5.4 Exponential Acceleration/Deceleration with Constant Acceleration/ Deceleration Time

⑤Exponential Acceleration/Deceleration with Bias with Constant Acceleration/Deceleration Time

With exponential acceleration/deceleration with bias, the rate of acceleration/deceleration is the same as described in ④, but a bias is applied. The Time Constant for Exponential Curve set in parameter Pn840 is set to the time required to reach the following speed.

Speed = Bias Speed set in Pn841 + (Speed set in Pn821 - Bias Speed set in Pn841) × 0.632

If this acceleration/deceleration pattern is used, the acceleration/deceleration time will remain constant even if the Speed set in Pn821 is changed. If the Bias Speed set in Pn841 is set to 0, then the acceleration/deceleration pattern will be the same as the exponential acceleration/deceleration pattern described in ④.

Table 5.12 Related Parameters

Object	Attribute	No.	Name
0x64	56	Pn826	Acceleration/Deceleration Type (= 0)
	58	Pn829	Filter Selection (= 2)
	51	Pn821	Speed [×1,000 steps/min]
	70	Pn840	Time Constant for Exponential Curve [ms]
	71	Pn841	Bias Speed [×1,000 steps/min]

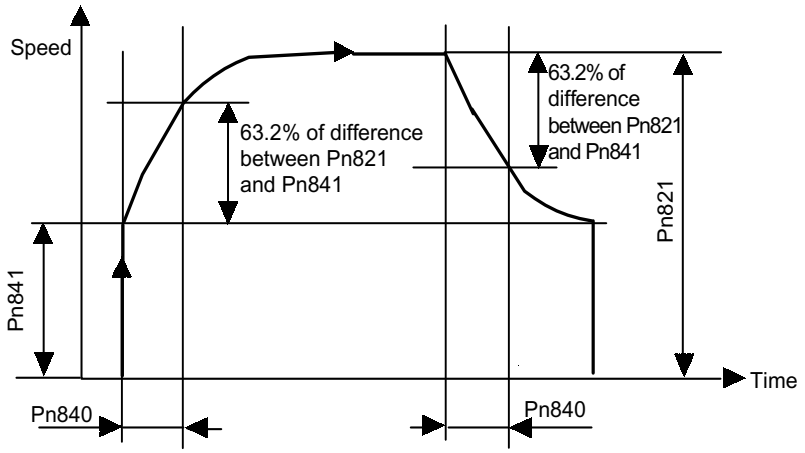

Fig. 5.5 Exponential Acceleration/Deceleration with Bias with Constant Acceleration/Deceleration Time

⑥Single-step Linear Acceleration/Deceleration with Constant Acceleration/Deceleration Time

With single-step linear acceleration/deceleration with a constant acceleration/deceleration time, the rate of acceleration/deceleration is determined by the Speed set in parameter Pn821 and the Time Constant of Moving Average set in parameter Pn842.

If this acceleration/deceleration pattern is used, the acceleration/deceleration time will remain constant even if the Speed set in Pn821 is changed.

Table 5.13 Related Parameters

Object	Attribute	No.	Name
0x64	56	Pn826	Acceleration/Deceleration Type (= 0)
	58	Pn829	Filter Selection (= 3)
	51	Pn821	Speed [×1,000 steps/min]
	72	Pn842	Time Constant of Moving Average [ms]

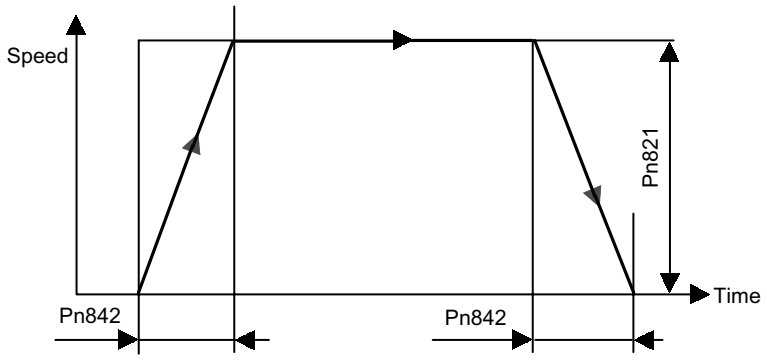

Fig. 5.6 Single-step Linear Acceleration/Deceleration with Constant Acceleration/Deceleration Time

⑦S-curve Acceleration/Deceleration with Constant Acceleration/ Deceleration

With S-curve acceleration/deceleration, the rate of acceleration/deceleration is determined by the Maximum Speed set in parameter Pn843 and the Acceleration Time set in parameter Pn822, just as in the single-step linear acceleration/deceleration pattern described in ①. In this case, however, a filter is applied when starting and stopping, and applied before and after reaching the Speed set in parameter Pn821, to round the corners of the acceleration/ deceleration. The time the corners are rounded is determined by the Time Constant of Moving Average set in parameter Pn842.

The time T required to reach the Speed set in parameter Pn821 in the positioning operation can be calculated using the following formula.

T [ms] = Pn842 + Pn822 × (Pn821/Pn843)

If this acceleration/deceleration pattern is used, the rate of acceleration/deceleration will remain constant even if the Speed set in Pn821 is changed.

Table 5.14 Related Parameters

Object	Attribute	No.	Name
0x64	56	Pn826	Acceleration/Deceleration Type (= 1)
	58	Pn829	Filter Selection (= 3)
	51	Pn821	Speed [×1,000 steps/min]
	52	Pn822	Acceleration Time [ms]
	72	Pn842	Time Constant of Moving Average [ms]
	73	Pn843	Maximum Speed [×1,000 steps/min]

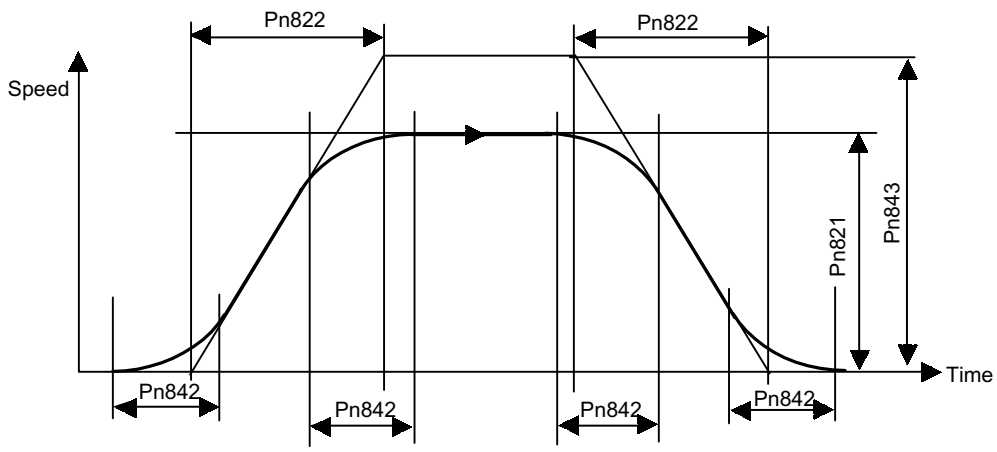

Fig. 5.7 S-curve Acceleration/Deceleration with Constant Acceleration/Deceleration

⑧Asymmetric S-curve Acceleration/Deceleration with Constant Acceleration/Deceleration

With asymmetric S-curve acceleration/deceleration, the S-curve acceleration/deceleration described in ⑦, is used, but separate rates can be set for acceleration and deceleration.

First, the rates of acceleration/deceleration are determined by the Maximum Speed set in parameter Pn843, the Acceleration Time set in parameter Pn822, and the Deceleration Time set in parameter Pn823 just as in the asymmetric linear acceleration/deceleration pattern described in ③. Then, a filter is applied when starting and stopping and positioning completed point, as well as before and after reaching the Speed set in parameter Pn821, to round the corners of the acceleration/deceleration. The time the corners are rounded is determined by the Time Constant of Moving Average set in parameter Pn842.

The time T required to reach the Speed set in Pn821 in the positioning operation can be calculated using the following formula.

$$T\ [\mathrm{ms}] = Pn842 + Pn822 \times (Pn821/Pn843)$$

If this acceleration/deceleration pattern is used, the rate of acceleration/deceleration will remain constant even if the Speed set in Pn821 is changed.

Table 5.15 Related Parameters

Object	Attribute	No.	Name
0x64	56	Pn826	Acceleration/Deceleration Type (=3)
	58	Pn829	Filter Selection (=3)
	51	Pn821	Speed [×1,000 steps/min]
	52	Pn822	Acceleration Time [ms]
	53	Pn823	Deceleration Time [ms]
	72	Pn842	Time Constant of Moving Average [ms]
	73	Pn843	Maximum Speed [×1,000 steps/min]

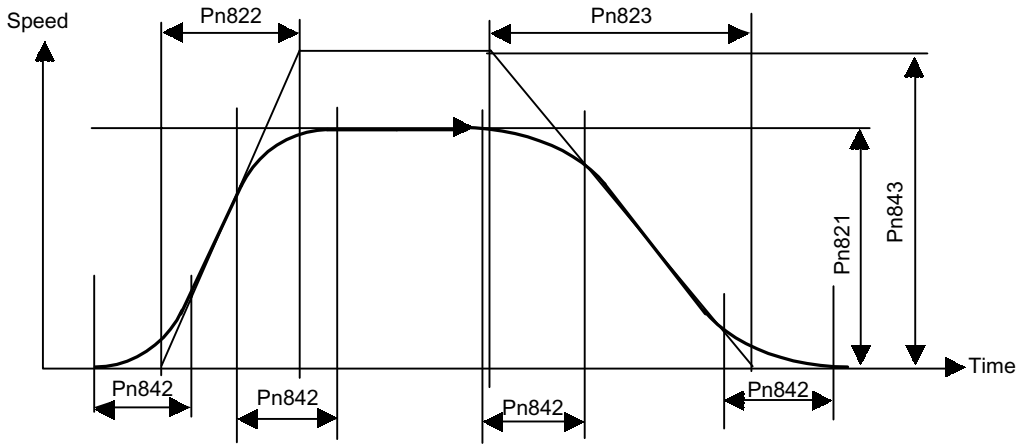

Fig. 5.8 Asymmetric S-curve Acceleration/Deceleration with Constant Acceleration/Deceleration

■ Parameter Details

This section describes parameter details for speed and acceleration/deceleration speed.

Speed (Object: 0x64, Attribute: #51; Pn821)

Use the Speed to set the speed for the positioning. The setting unit is [× 1,000 steps/min].

Acceleration Time (Object: 0x64, Attribute: #52; Pn822)

Use the Acceleration Time to set the acceleration time for the positioning. The setting unit is [ms].

Deceleration Time (Object: 0x64, Attribute: #53; Pn823)

Use the Deceleration Time to set the deceleration time when using the asymmetric linear acceleration/deceleration. The setting unit is [ms].

This parameter is enabled only when the Acceleration/Deceleration Type (Object: 0x64, Attribute: #56; Pn826) is set to the asymmetrical linear acceleration/deceleration.

Switch Speed (Object: 0x64, Attribute: #54; Pn824)

Use the Switch Speed to set the switching speed to acceleration and deceleration of the second step when using double-step linear acceleration/deceleration. The setting unit is [× 1,000 steps/min].

This parameter is enabled only when the Acceleration/Deceleration Type (Object: 0x64, Attribute: #56; Pn826) is set to double-step linear acceleration/deceleration.

Second Acceleration/Deceleration Time (Object: 0x64, Attribute: #55; Pn825)

Use the Second Acceleration/Deceleration Time to set the acceleration and deceleration time for the second step when using double-step linear acceleration/deceleration. The setting unit is [ms].

This parameter is enabled only when the Acceleration/Deceleration Type (Object: 0x64, Attribute: 56; Pn826) is set to double-step linear acceleration/deceleration.

Acceleration/Deceleration Type (Object: 0x64, Attribute: #56; Pn826)

Use the Acceleration/Deceleration Type to set the type of acceleration and deceleration for the positioning.

You can set eight different acceleration and deceleration patterns using different combinations of Acceleration/Deceleration Type and Filter Selection (Object: 0x64, Attribute: #58; Pn829).

Table 5.16 Acceleration/Deceleration Type

Pn826	Description
0	None
1	Single Step Linear
2	Double Step Linear
3	Asymmetric

Interrupt Feeding Speed (Object: 0x64, Attribute: #57; Pn827)

Use the Interrupt Feeding Speed to set the speed for interrupt feeding.

The setting unit is [× 1,000 steps/min].

Filter Selection (Object: 0x64, Attribute: #58; Pn829)

Use the Filter Selection to set the acceleration and deceleration filter type. This parameter is used in common by the positioning, JOG, and origin search operations.

Table 5.17 Filter Selection

Pn829	Description
0	None
1	Exponential
2	Exponential with Bias
3	Moving Average

JOG Unit Selection (Object: 0x64, Attribute: #59; Pn830)

Use the JOG Unit Selection to set the command unit for the speed setting for command data at JOG operation.

Table 5.18 JOG Unit Selection

Pn830	Description
0	Sets an override value (%) for the JOG speed (Pn831) in the command data.
1	Set the JOG speed directly in the command data. The setting unit is 1,000 steps/min.

JOG Speed (Object: 0x64, Attribute: #60; Pn831)

Use the JOG Speed to set the speed when using the JOG operation. The setting unit is [× 1,000 steps/min].

JOG Acceleration Time(Object: 0x64, Attribute: #61; Pn832)

Use the JOG Acceleration Time to set the acceleration time when using the JOG operation. The setting unit is [ms].

JOG Deceleration Time (Object: 0x64, Attribute: #62; Pn833)

Use the JOG Deceleration Time to set the deceleration time when using asymmetrical acceleration/deceleration with the JOG operation. The setting unit is [ms].

This parameter is enabled only when the JOG Acceleration/Deceleration Type (Object: 0x64, Attribute: #65; Pn836) is set to Asymmetric (set value: 3).

JOG Switch Speed (Object: 0x64, Attribute: #63; Pn834)

Use the JOG Switch Speed to set the switching speed to double-step acceleration and deceleration when using double-step linear acceleration/deceleration with the JOG operation. The setting unit is [× 1,000 steps/min].

This parameter is enabled only when the JOG Acceleration/Deceleration Type (Object: 0x64, Attribute: #65; Pn836) is set to Double-step Linear (set value: 2).

JOG Second Acceleration/Deceleration Time (Object: 0x64, Attribute: #64; Pn835)

Use the JOG Second Acceleration/Deceleration Time to set the second acceleration and deceleration time when using double-step linear acceleration/deceleration with the JOG operation. The setting unit is [ms].

This parameter is enabled only when the JOG Acceleration/Deceleration Type (Object: 0x64, Attribute: #65; Pn836) is set to Double-step Linear (set value: 2).

JOG Acceleration/Deceleration Type (Object: 0x64, Attribute: #65; Pn836)

Use the JOG Acceleration/Deceleration Type to set the acceleration and deceleration type with the JOG operation.

You can set eight different acceleration and deceleration patterns using different combinations of JOG Acceleration/Deceleration Type and Filter Selection (Object: 0x64, Attribute: #58; Pn829).

Table 5.19 JOG Acceleration/Deceleration Type

Pn836	Description
0	None
1	Single-step Linear
2	Double-step Linear
3	Asymmetric

Time Constant for Exponential Curve (Object: 0x64, Attribute: #70; Pn840)

Use the Time Constant for Exponential Curve to set the time constant when using exponential acceleration/deceleration. This parameter is used in common by the positioning and the continuous rotary operation. The setting unit is [ms].

Bias Speed (Object: 0x64, Attribute: #71; Pn841)

Use the Bias Speed to set the bias speed of the exponential acceleration/deceleration. The setting unit is [× 1,000 steps/min].

Time Constant of Moving Average (Object: 0x64, Attribute: #72; Pn842)

Use the Time Constant of Moving Average to set the time constant of the average moving speed of the acceleration/deceleration. This parameter is used in common by the positioning and the continuous rotary operation. The setting unit is [ms].

Maximum Speed (Object: 0x64, Attribute: #73; Pn843)

Use the Maximum Speed to set the maximum speed of the positioning, JOG, and origin search operations. The acceleration/deceleration data is calculated from this data and the time constants. The setting unit is [× 1,000 steps/min].

Step Distance 1 (Object: 0x64, Attribute: #74; Pn844)

Use the Step Distance 1 to set the amount of movement when executing step operation. This value is used when the 0 has been specified as the step movement amount in a command data. The setting unit is [steps].

Step Distance 2 (Object: 0x64, Attribute: #75; Pn845)

Use the Step Distance 2 to set the amount of movement when executing step operation. This value is used when the 1 has been specified as the step movement amount in a command data. The setting unit is [steps].

Step Distance 3 (Object: 0x64, Attribute: #76; Pn846)

Use the Step Distance 3 to set the amount of movement when executing step operation. This value is used when the 2 has been specified as the step movement amount in a command data. The setting unit is [steps].

Step Distance 4 (Object: 0x64, Attribute: #77; Pn847)

Use the Step Distance 4 to set the amount of movement when executing step operation. This value is used when the 3 has been specified as the step movement amount in a command data. The setting unit is [steps].

5.3.5 Positioning

This section describes the parameter details about positioning.

■ Parameter Details

Positioning Completion Range (Object: 0x64, Attribute: #90; Pn850)

Use the Positioning Completion Range to set the positioning completed range, i.e., to determine if the axis is In-position. The setting unit is [steps]. When the Positioning Completion Range is set to 0, an In-position check will not be performed.

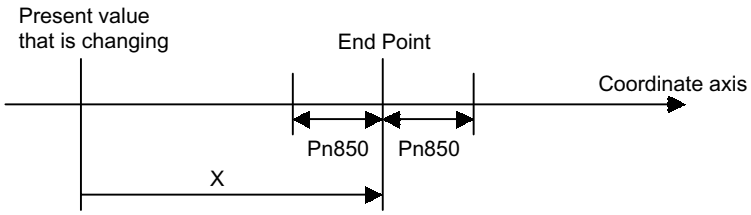

Fig. 5.9 Positioning Completion Range

When the following condition is satisfied in the above figure, the axis is viewed as being at the In-position and the In-position Flag in the response data will be set to 1.

- X = (End point - Present value) ≤ Pn850

Positioning Monitor Time (Object: 0x64, Attribute: #91; Pn851)

Use the Positioning Monitor Time to set the time for performing In-position check. The setting unit is [ms]. If, after the move command distribution from the DeviceNet Unit has been completed, the positioning completed range is not entered within the time set, A.9A (positioning a completion timeout warning) will be sent.

If this parameter is set to 0, the positioning time is not monitored.

Positioning Near Range (Object: 0x64, Attribute: #92; Pn852)

Use the Positioning Near Range to set the range for positioning area proximity to be detected. If the difference between the present position and the target position are within this parameter range, the proximity signal in the response data will be set to 1. The setting unit is [steps].

Direction (Object: 0x64, Attribute: #93; Pn853)

Use the Direction to set the movement direction for when Station Commands or rotation commands using absolute values are used.

Table 5.20 Direction

Pn853	Description
0	Uses the movement direction in command data.
1	Uses the direction for the shortest travel.

Interrupt Feeding Positioning Speed (Object: 0x64, Attribute: #94; Pn854)

Use the Interrupt Feeding Positioning Speed to set the positioning speed after the interrupt input signal has reversed status for an interrupt feeding command. The setting unit is [× 1,000 steps/min].

Interrupt Feeding Distance (Object: 0x64, Attribute: #95; Pn855)

Use the Interrupt Feeding Distance to set the feeding distance after the interrupt input signal has reversed status for an interrupt feeding command. The setting unit is [steps].

Interrupt Feeding Function Selection (Object: 0x64, Attribute: #96; Pn856)

Use the Interrupt Feeding Function Selection to select the polarity of the interrupt input signal.

Bit	Name	Description
0	Interrupt Input Signal Polarity	0: Enabled on low 1: Enabled on high
1 to 15	Reserved	–

Station (Object: 0x64, Attribute: #100; Pn85A)

Use the Station to set how many stations one revolution of the Servomotor will be evenly split into when Station Commands are used.

In Station Commands, equally divided stations are numbered in order from 0 and positioning is performed by specifying a station number.

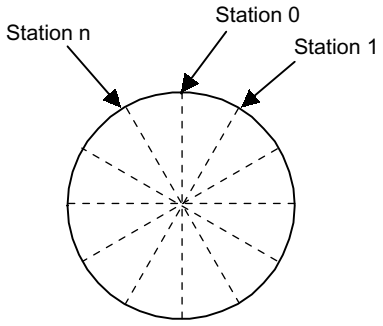

5.3.6 Point Table

This section describes the parameter details about point tables.

■ Parameter Details

Position_1 to 50
(Object: 0x65, Attributes: #50 to #99; Pn900 to Pn931)

Set the Position_1 to 50 to the movement amounts for point table operation. Use the same number for the Position_1 to 50 and Speed_1 to 50.

The setting unit is [steps].

Speed_1 to 50
(Object: 0x65, Attributes: #150 to #199; Pn940 to Pn971)

Set the Speed_1 to 50 to the speeds for point table operation. Use the same number for the Position_1 to 50 and Speed_1 to 50.

The setting unit is [× 1,000 steps/min].

5.3.7 Multi-speed Positioning

By using multi-speed positioning, the speed can be changed in stages during positioning.

Up to 16 speed change stages are possible.

When the axis reaches a specified position, the speed switches to the speed for the next stage and the axis moves to the specified position in that next stage.

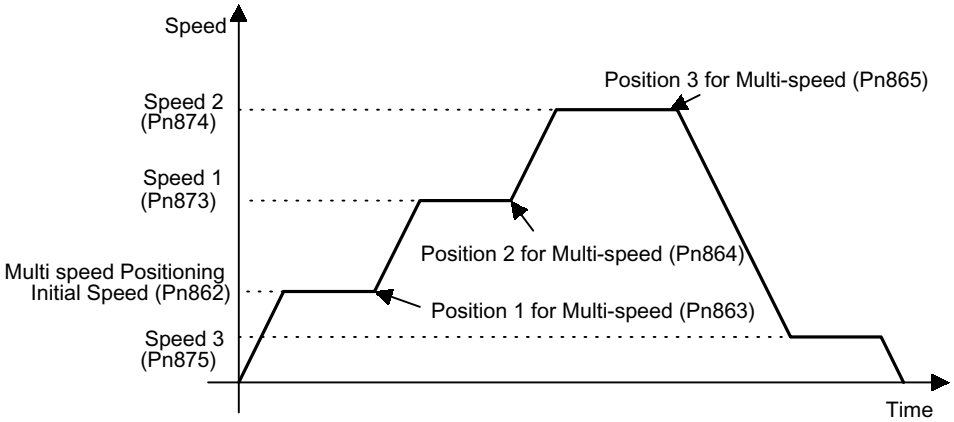

■ Parameter Details

This section describes the parameter details about multi-speed positioning.

Speed Switch Point (Object: 0x64, Attribute: #111; Pn861)

Use the Speed Switch Point to set the number of points at which the speed will be switched. If, for example, the parameters for speed switching positions were set from 1 to 16 but this setting for the number of points was set to 3, the speed switching would be enabled for 3 points only.

Multi-speed Positioning Initial Speed (Object: 0x64, Attribute: #112; Pn862)

Use the Multi-speed Positioning Initial Speed to set the initial feed speed when performing speed multi-step positioning. This speed will be enabled until the position in the speed switching position 1 parameter is reached.

The setting unit is [× 1,000 steps/min].

Positions 1 to 16 for Multi-speed (Object: 0x64, Attributes: #113 to #128; Pn863 to Pn872)

Use the Positions for Multi-speed to set the position at which the speed is to change at a relative position to the start position. The speed switching position xx and switching speed xx are used together. For example, the axis will move from speed switching position 1 to speed switching position 2 at speed 1.

The setting unit is [steps].

Speeds 1 to 16 for Multi-speed (Object: 0x64, Attributes: #129 to #144; Pn873 to Pn882)

Use the Speeds for Multi-speed to set the speed between specified speed switching positions. For example, the axis will move at speed 2 between speed switching position 2 and speed switching position 3.

The setting unit is [× 1,000 steps/min].

5.3.8 Notch Signal Output Positioning

During the positioning, notch signals (NOTCH 1 and NOTCH 2) are output when specified points are passed.

Two notch signals, NOTCH 1 and NOTCH 2, can be output.

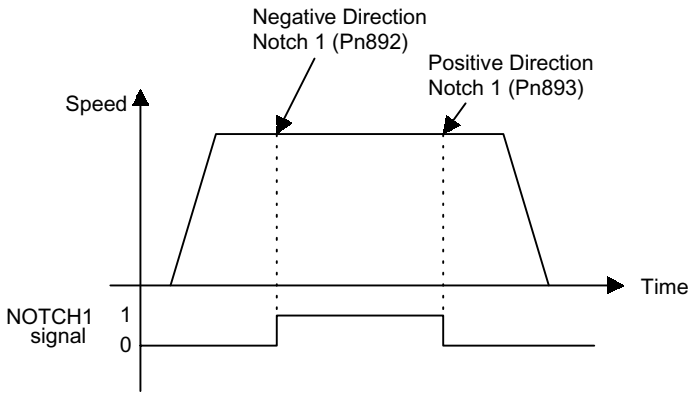

■ Parameter Details

This section describes the parameter details about notch signal output positioning.

Notch Signal Position Designation (Object: 0x64, Attribute: #160; Pn890)

Use the Notch Signal Position Designation to set whether absolute or relative positions are set for the notch signal output position parameters.

Table 5.21 Notch Signal Position Designation

Pn890	Description
0	Specifies absolute position.
1	Specifies relative position.

Notch Signal (Object: 0x64, Attribute: #161; Pn891)

Use the Notch Signal to set the polarity of the notch signal output.

Table 5.22 Notch Signal

Pn891	Description
0	Sets NOTCH 1 signal.
1	Sets NOTCH 2 signal.

Table 5.23 Bit Meanings

Bit 0/ Bit 1	Description
0	Normally: OFF, When passed: ON
1	Normally: ON, When passed: OFF

Negative Direction Notch 1 (Object: 0x64, Attribute: #162; Pn892) Positive Direction Notch 1 (Object: 0x64, Attribute: #163; Pn893)

Use the Positive/Negative Direction Notch 1 to set the output position range for notch signal (NOTCH 1). When the present position is inside this range, the status of the NOTCH 1 signal output is reversed based on the Notch Signal set in Pn891.

Negative Direction Notch 2 (Object: 0x64, Attribute: #164; Pn894) Positive Direction Notch 2 (Object: 0x64, Attribute: #165; Pn895)

Use the Positive/Negative Direction Notch 2 to set the output position range for notch signal (NOTCH 2). When the present position is inside this range, the status of the NOTCH 2 signal output is reversed based on the Notch Signal set in Pn891.

6

DeviceNet Communications

This chapter explains using DeviceNet communications to execute commands and editing user parameters for a DeviceNet Unit.

6.1 Control Configuration - 6-3

6.2 DeviceNet Switch Settings and Display - - - - - - - - - - - - - - - - - 6-4

6.2.1 Rotary Switch Settings for Setting Node Address - - - - - - - - - - - - - - - 6-4

6.2.2 Rotary Switch Settings for Setting Baud Rate - - - - - - - - - - - - - - - - - - 6-5

6.2.3 LED Indicators - 6-5

6.3 Precautions for Communications Line Design - - - - - - - - - - - 6-6

6.3.1 Providing the Communications Power Supply - - - - - - - - - - - - - - - - - - 6-6

6.3.2 Communications Line Noise Precautions - 6-16

6.4 Overview of Remote I/O and Explicit Message Communications - - - - - - - - - - - - - - - - - - 6-20

6.4.1 Remote I/O Communications - 6-20

6.4.2 Explicit Message Communications - 6-20

6.5 Remote I/O Communications - 6-21

6.5.1 Basic Block - 6-21

6.5.2 General Command Bits and Status - 6-22

6.5.3 Move Commands for Remote I/O Communications - - - - - - - - - - - - - 6-26

6.5.4 Set/Read Commands for Remote I/O Communications - - - - - - - - - - 6-34

6.6 Details on Move Commands for Remote I/O Communications - - - - - - - - - - - - - - - - - - - 6-42

6.6.1 No-operation (Command Code: 0000, 0 Hex) - - - - - - - - - - - - - - - - - 6-42

6.6.2 Operation - 6-52

6.7 Command Method Using the Remote I/O Communications - 6-60

6.7.1 Basic Operation - 6-60

6.7.2 Command Method - 6-60

6.8 Communications Using Explicit Messages - - - - - - - - - - - - - 6-65

6.8.1 Explicit Messages Overview - 6-65

6.8.2 Command/Response Blocks - 6-66

6.8.3 Sending Explicit Messages Using the CMND Instruction - - - - - - - - - 6-68

6.9 Tracing Data - 6-71
6.9.1 Trace Parameters - 6-71
6.9.2 Reading Trace Data - 6-74
6.9.3 Tracing Data - 6-77
6.10 Changing Parameters - 6-78
6.10.1 Managing DeviceNet Data - 6-78
6.10.2 Changing Parameters - 6-79

6.1 Control Configuration

An outline of the control configuration is shown below. A maximum of 63 DeviceNet Units or other slave devices can be connected to one DeviceNet Master Unit.

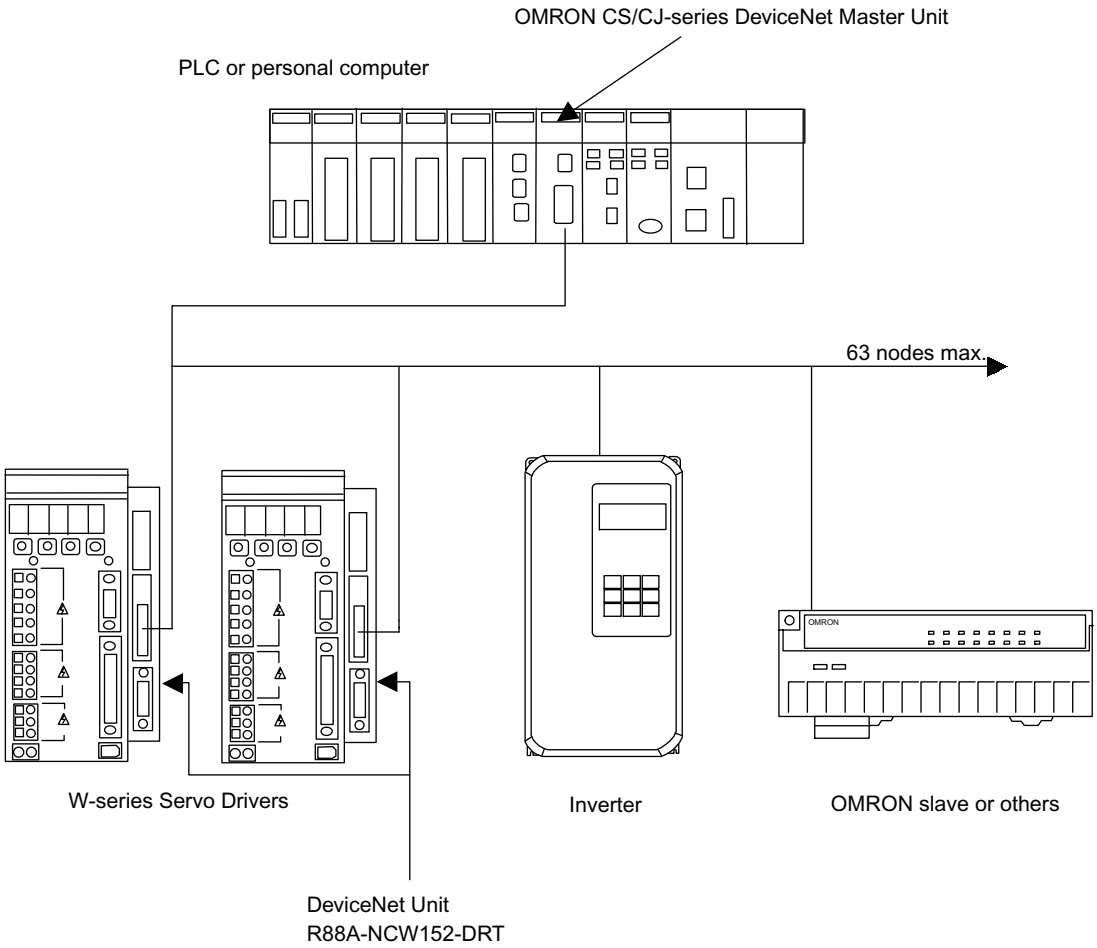

6.2 DeviceNet Switch Settings and Display

This section explains the switch settings and display on the DeviceNet Unit.

6.2.1 Rotary Switch Settings for Setting Node Address

Use the rotary switches (×1, ×10) to set the DeviceNet node address. After making the settings with the power OFF, turn ON the communications power again to enable the settings.

The node address can be set between 0 and 63. If you make a setting outside this range, a Rotary Switch Setting Error (A.E8) will occur.

Select the node address of the DeviceNet Unit using the switch settings as shown in the following table.

Note The node address can be set anywhere within the specified range, as long as it is not the same as the node address of any other node in the network.

×10	×1	Node Address	×10	×1	Node Address	×10	×1	Node Address	×10	×1	Node Address
0	0	0	2	0	20	4	0	40	6	0	60
0	1	1	2	1	21	4	1	41	6	1	61
0	2	2	2	2	22	4	2	42	6	2	62
0	3	3	2	3	23	4	3	43	6	3	63
0	4	4	2	4	24	4	4	44	–	–	–
0	5	5	2	5	25	4	5	45			
0	6	6	2	6	26	4	6	46			
0	7	7	2	7	27	4	7	47			
0	8	8	2	8	28	4	8	48			
0	9	9	2	9	29	4	9	49			
1	0	10	3	0	30	5	0	50			
1	1	11	3	1	31	5	1	51			
1	2	12	3	2	32	5	2	52			
1	3	13	3	3	33	5	3	53			
1	4	14	3	4	34	5	4	54			
1	5	15	3	5	35	5	5	55			
1	6	16	3	6	36	5	6	56			
1	7	17	3	7	37	5	7	57			
1	8	18	3	8	38	5	8	58			
1	9	19	3	9	39	5	9	59			

6.2.2 Rotary Switch Settings for Setting Baud Rate

Use the rotary switches (DR) to set the DeviceNet baud rate. After making the settings with the power OFF, turn ON the communications power again to enable the settings.

Table 6.1 DR Settings

DR	Baud Rate Setting
0	125 kbit/s
1	250 kbit/s
2	500 kbit/s
3 to 9	Do not set.

6.2.3 LED Indicators

DeviceNet Units are equipped with two LED indicators, the Module Status indicator to indicate the Unit status, and the Network Status indicator to indicate the DeviceNet communications status.

■ Module Status (MS) Indicator

The MS indicator shows the status of the DeviceNet Unit.

Indicator	Status
OFF.	Power not being supplied.
Green ON.	Normal
Green Flashing.	Not set.
Red Flashing.	Nonfatal error
Red ON.	Fatal error
Red and green flash alternately.	Unit self-diagnosis

Refer to *10.3 Alarm/Warning Codes and Error Codes for Message Communications* for details on the malfunction if the the Module Status indicator is either red flashing or red ON.

■ Network Status (NS) Indicator

The NS indicator shows the status of DeviceNet communications.

Indicator	Status
OFF.	Offline and power OFF.
Green Flashing.	Online and communications not connected.
Green ON.	Online and communications connected.
Red Flashing.	Nonfatal communications error
Red ON.	Fatal communications error

6.3 Precautions for Communications Line Design

This section explains how to provide communications power supply and communications line noise prevention.

6.3.1 Providing the Communications Power Supply

This section explains how to locate the communications power supply and its concept, how to determine the located power supply (steps 1 to 3) , and dual power supply.

■ Locating the Communications Power Supply and Its Concept

The power supply location patterns and the basic concept are described below.

Basic Concept

Basic precautions are as follows:

- The communications power supply must be 24 V DC.
- Make sure that the power is supplied from the trunk line.
- When providing power to several nodes from one power supply, try to locate the nodes in both directions from the power supply if possible.
- Provide power through Power Supply Taps. It is, however, possible to use T-branch Taps instead when there is one communications power supply in the system and the total current consumption is 5 A or less.
- The power supply capacity for cables is restricted to 8 A for thick cables and 3 A for thin cables.
- A single network is usually supplied by one power supply. It is, however, possible to have more than one power supply when power supply specifications cannot be met with a single power supply. (Refer to *Step 3: Splitting the System into Multiple Power Supplies* on *page 6-14.*)
- Fully consider the power supply capacity allowance in the design.
- If the power supply is switched OFF during the operation of the network, there may be a malfunction in the nodes.
- The current capacity of the drop line varies according to its length. The longer the drop line, the lower its maximum capacity becomes. This is the same whether the cable is thick or thin. Calculate the current capacity passing through the drop line I (the total current consumption at the drop line) using the following formula.
  - I = 4.57/L
    I: Permissible current (A), L: Length of the drop line (m)

Flow Chart

Use the flow chart below to determine the communications power supply on the trunk line. Satisfy the conditions for each drop line on the previous page.

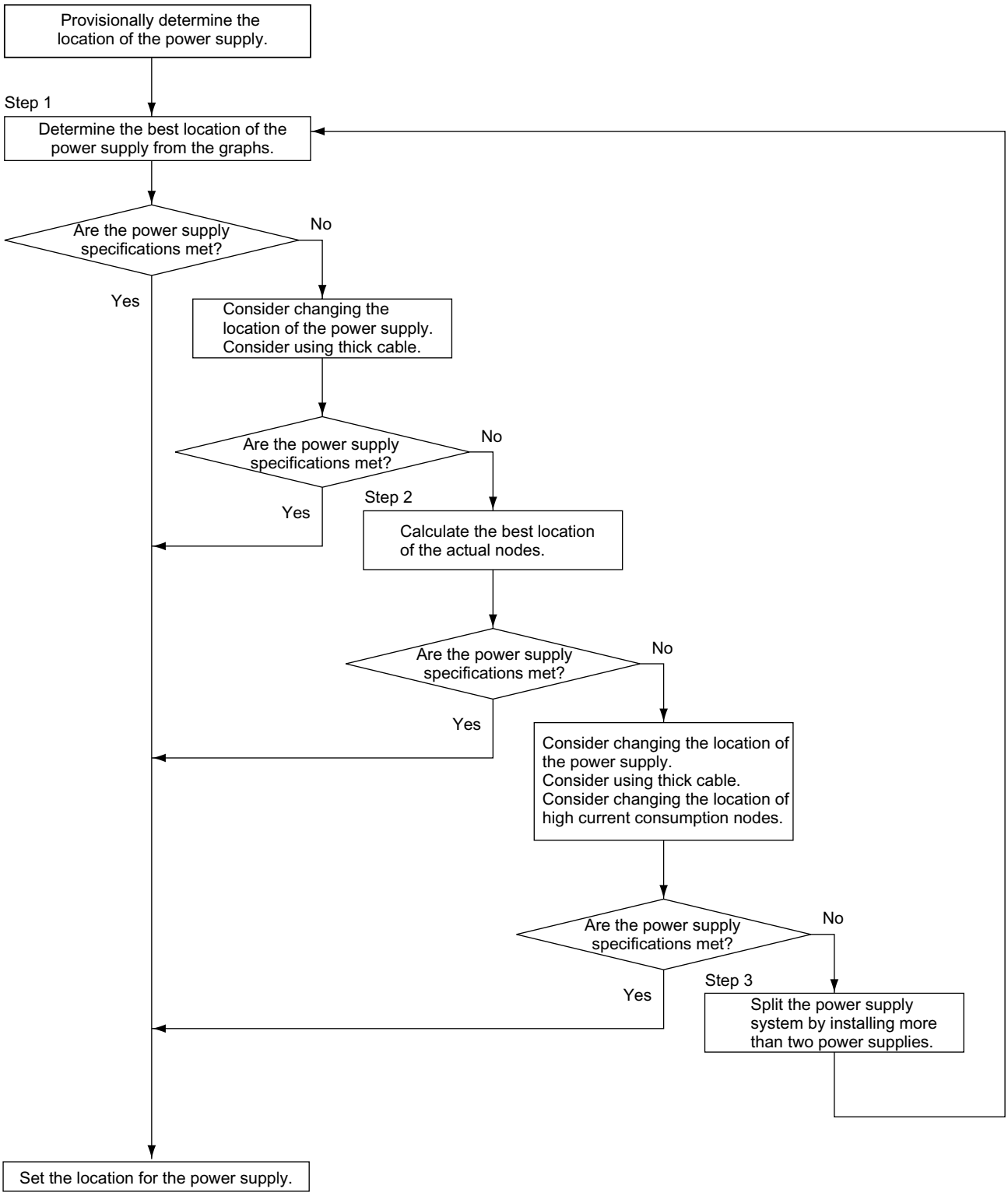

6

Power Supply Location Patterns

The power supply can be located in the configurations shown below. Basically, select from the configurations ① and ②.

Consider using configuration ③ when power supply specifications cannot be met by configurations ① and ②. It is possible to use configuration ④ for a dual power supply.

①Locating the Nodes on Both Sides of the Power Supply

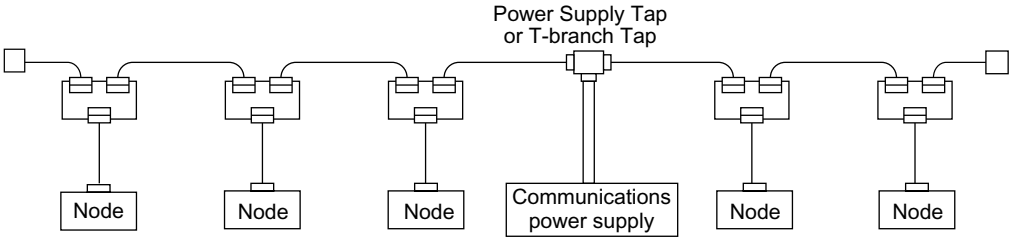

②Locating the Nodes on One Side of the Power Supply

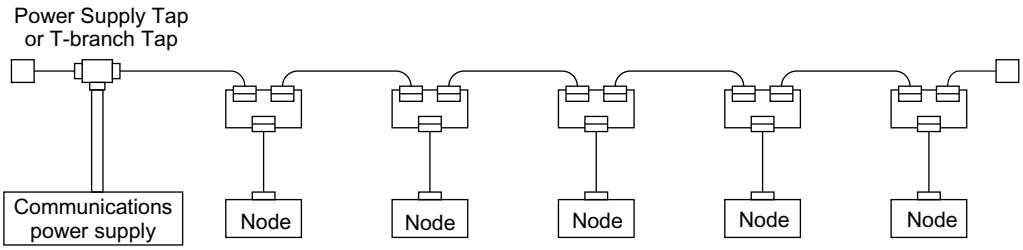

6

③Splitting the Power Supply System with Multiple Power Supplies and Locating the Nodes on One Side of the Power Supplies

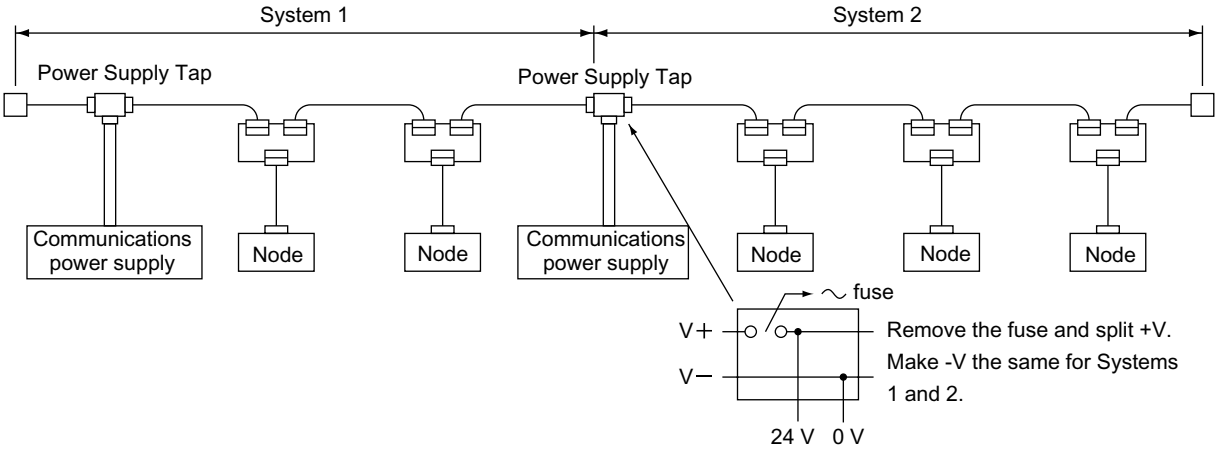

④Dual Power Supply with Multiple Power Supplies

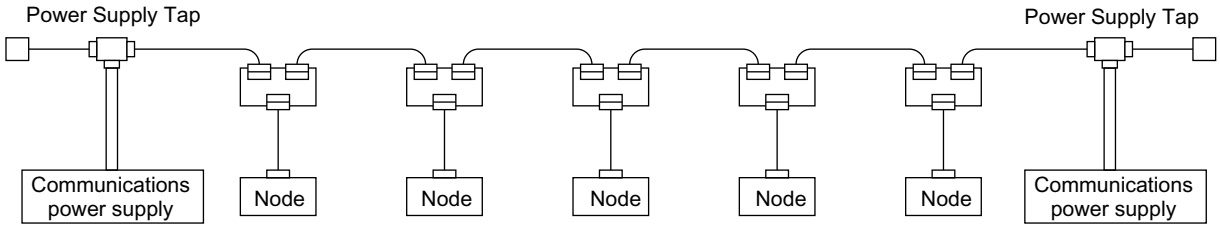

Note 1. Configuration ① is recommended for a single power supply to several nodes.

2. If power supply specifications cannot be met with a single power supply when the current capacity of the thick cable exceeds 8 A even after the power supply location is modified, use more than one communications power supply.

3. In configuration ①, the power can be supplied bi–directionally to the trunk line as long as each current capacity is 8 A or less when using thick cable. Accordingly, it is possible to have a configuration with a total maximum current capacity of up to 16 A.

4. Consider changing to thick cable to meet specifications if the current capacity of the thin cable exceeds 3 A when using thin cable for the trunk line.

Setting the Location of the Power Supply

Determine whether or not the current can be supplied normally by finding the current capacity required by each node and the voltage drop in the cables to be used to provide power. Calculate the values below in advance.

- The current capacity required by each node
- The distance between the power supply and each node

Calculating the Location of the Power Supply

There are two methods to find the best location of the communications power supply on the trunk line.

- Simple calculation from a graph
- Calculation by formula (Calculating the voltage drop from resistance and current consumption of the communications cables)

Each drop line must satisfy the equation in *Basic Concept* on *page 6-6*, which represents the relationship between the drop line length and the current capacity for the drop line.

Note 1. From the graph, a hypothetical power supply location can be determined if the conditions calculated in the graph are met by estimating the worst configuration (that has the maximum voltage drop as shown in the diagram below).

2. Even if the power supply specifications cannot be met using the graph, the conditions can be met and a hypothetical power supply location determined by using the formula.

3. When the communications power supply and the internal circuit power supply are the same, use the formula to calculate a hypothetical power supply location because it cannot be determined by using the graph.

■ Step 1: Determining the Best Location for the Power Supply from a Graph

A voltage drop occurs when a current flows through a DeviceNet special cable. The longer the communications cable and the greater the current, the greater the voltage drop. The communications power supply at each node must be 11 V DC or more. To ensure this, the relationship is plotted as shown in the graph below to find the maximum current that easily satisfies the voltage of the communications power supply at different trunk line lengths even if there is a voltage drop due to cable resistance.

Thick Cable

Distance (m)	0	25	50	100	150	200	250	300	350	400	450	500
Max. current (A)	8.00	8.00	5.42	2.93	2.01	1.53	1.23	1.03	0.89	0.78	0.69	0.63

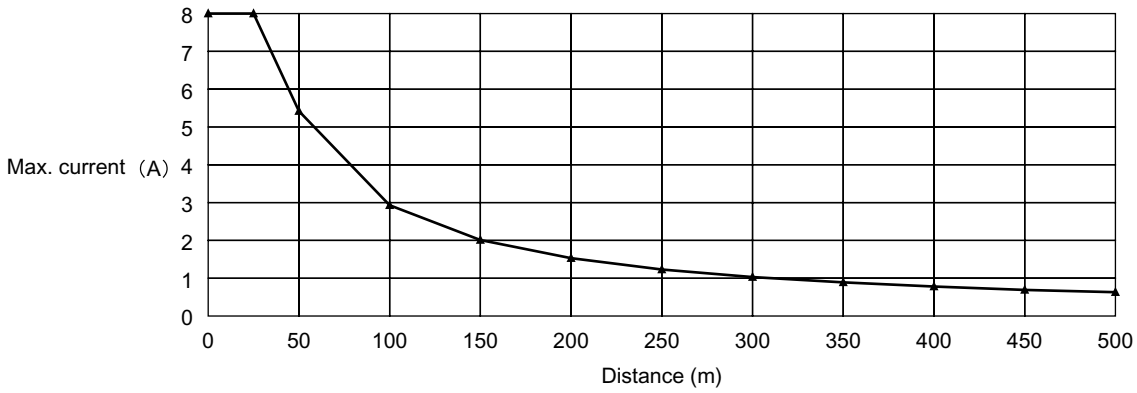

Thin Cable

Distance (m)	0	10	20	30	40	50	60	70	80	90	100
Max. current (A)	3.00	3.00	3.00	2.06	1.57	1.26	1.06	0.91	0.80	0.71	0.64

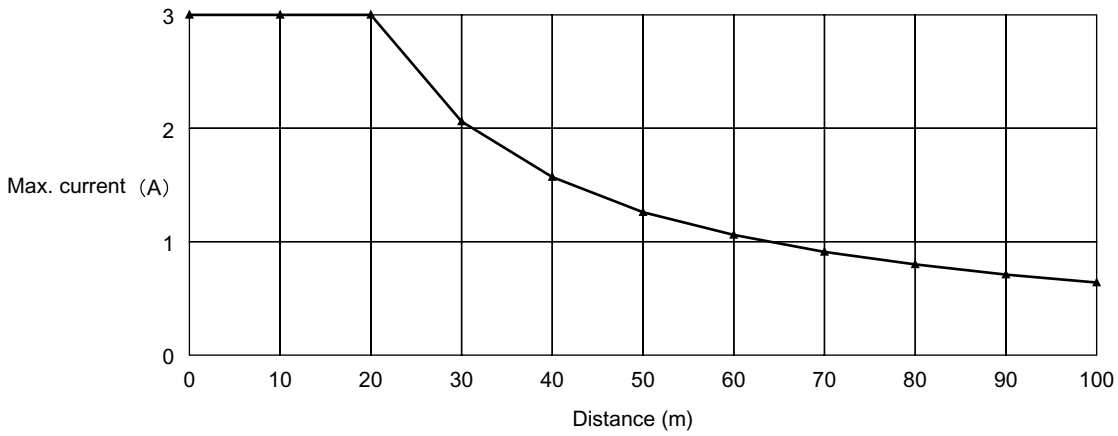

Determining the Best Location of the Power Supply from a Graph

Verify the Items ① to ③ below for each node located in the same direction viewed from the power supply. Therefore, if nodes are located on both sides of the power supply, these items must be verified for all nodes located in each direction.

①Find A, the total current consumption of all the nodes located for each direction.

②Using the graph compute B, the maximum current flow in each cable from the power supply to the end of the trunk line according to the types of cables (thick or thin).

③Compare the values found in Steps ① and ②, above. If the first value (A) is the same as the second (B) or less, this shows that power supply specifications are met and power can be supplied to all nodes at any point in the network.

Note Be sure to refer to the correct graph because the maximum current flow is different for thick and thin cables.

Countermeasures

If the second value (B) is less than the first (A), use the following procedure to locate the communications power supply.

- Locate the communications power supply in the center of the network and the nodes to both sides of it.
- If the nodes are already located at both sides of the power supply, move the power supply in the direction that requires the larger current capacity.
- If thin cable is being used, replace it with thick cable.

Note If, after following the above procedure, B is still the same as A or less, go to Step 2 and determine the actual position of the nodes by the formula calculation method.

Example

The following example shows a Network that requires power to be supplied for 240 m on thick cable. The power supply is located in the center of the network. Because the power supply is in the center, the maximum current will flow both to the left and to the right, enabling the supply of at least twice the maximum current as when the power supply is placed on the end of the network. The current consumption for individual nodes is as follows:

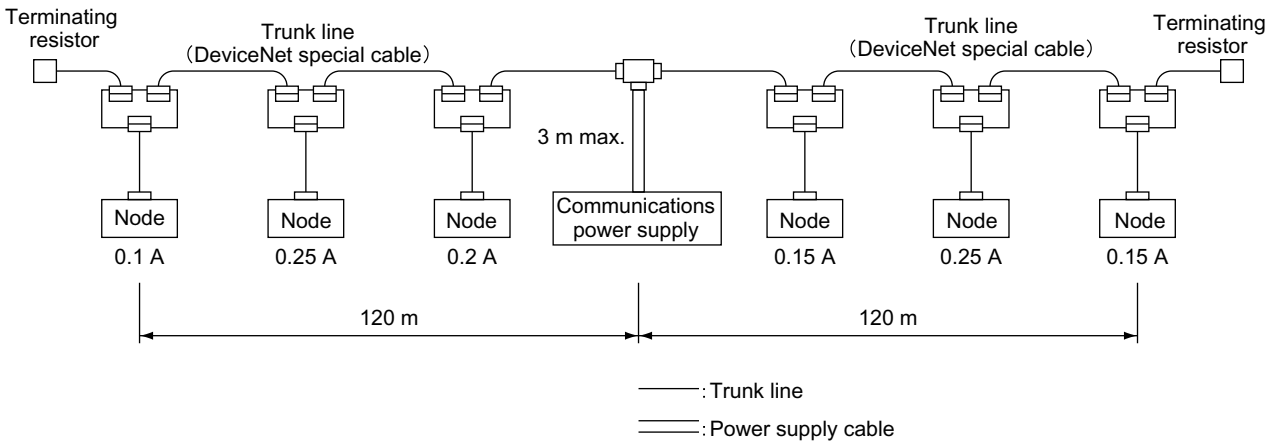

Total power supply length on left = Total power supply length on right = 120 m
Total current consumption on left: 0.1 + 0.25 + 0.2 = 0.55 A
Total current consumption on right: 0.15 + 0.25 + 0.15 = 0.55 A
Maximum current for the left side of the thick cable (see previous table) = approx. 2.5 A
Maximum current for the right side of the thick cable (see previous table)
= approx. 2.5 A
(using straight line approximation between 100 to 150 m)

Because the total current flow (0.55 A) is less than the maximum current (approx. 2.5 A) on both the left and the right sides, the power supply can be placed at the center of the network and provide power to all nodes.

■ Step 2: Calculating the Best Location of the Actual Nodes

Go to Step 2 if the best location for the power supply cannot be determined from the graphs. The second method calculates the best location for each actual node and does not estimate the worst possible configuration for the power supply.

Basically, in the DeviceNet network the permissible maximum voltage drop within the system can be specified at 5 V for a power supply line (+V or -V), by calculating the specifications for the voltage of the communications power supply (24 V DC) and the input voltage of the communications power supply of each device (11 to 25 V DC).

Of the permissible maximum voltage drop within the system (5 V), the permissible voltage drop in the trunk lines and drop lines are 4.65 V and 0.35 V respectively. The following explains the formula in case the communications power supply and the internal circuit power supply are provided individually.

For details about voltage drop and the formula when the communications power supply and the internal circuit power supply are the same, refer to the *DeviceNet Operation Manual* (W267-E1-□).

Formulas

Try to calculate the best location for each node using the condition formula below. If the best location for each node can be determined using the formula, the specifications for the power supply to each node can also be met. Do not exceed the maximum current capacity of the cable (Thick cable: 8 A and thin cable: 3 A).

$$\Sigma\ (Ln \times Rc + Nt \times 0.05)\ \times In \leq 4.65\ V$$

Ln: The distance between the power supply and the nodes (not including the lengths of the drop lines)

Rc: Maximum cable resistance per cable
(Thick cable: 0.015 W/m, thin cable: 0.069 W/m])

Nt: The number of T-branch Taps between each node and the power supply

In: The consumption current required for the communications power supply for each node

0.005 Ω = The contact resistance of the T-branch Taps

Note If nodes are placed on both sides of the power supply, calculate in each direction and make sure the following conditions are satisfied.

Voltage drop (V) on left trunk line ≤ 4.65 V
Voltage drop (V) on right trunk line ≤ 4.65 V

Example

The following example shows a Network that requires power to be supplied for 240 m on thick cable. The power supply is located in the center of the network.

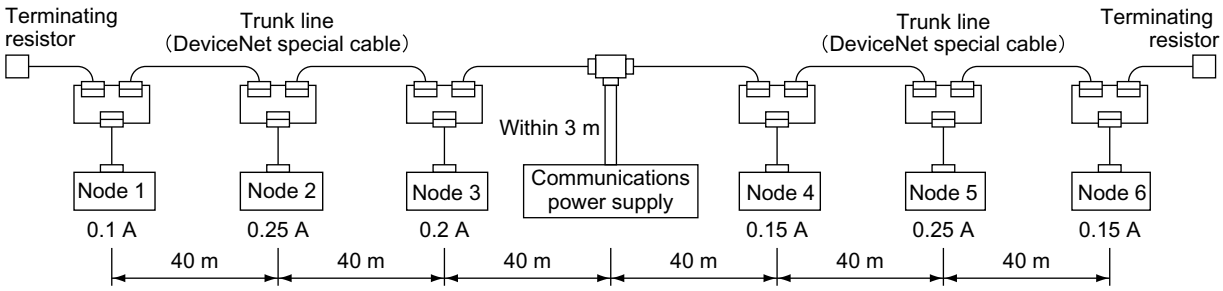

- Calculation on the left of the power supply

  Node 1: $(120 \times 0.015 + 3 \times 0.005) \times 0.1 = 0.1815$ (V)

  Node 2: $(80 \times 0.015 + 2 \times 0.005) \times 0.25 = 0.3025$ (V)

  Node 3: $(40 \times 0.015 + 1 \times 0.005) \times 0.2 = 0.121$ (V)

  $\rightarrow 0.1815 + 0.3025 + 0.121 = 0.605 \text{ V} \leq 4.65 \text{ V}$

  Thus, the best location for the nodes can be determined by using the condition formula.

- Calculation on the right of the power supply

  Node 4: $(40 \times 0.015 + 1 \times 0.005) \times 0.15 = 0.09075$ (V)

  Node 5: $(80 \times 0.015 + 2 \times 0.005) \times 0.25 = 0.3025$ (V)

  Node 6: $(120 \times 0.015 + 3 \times 0.005) \times 0.15 = 0.27225$ (V)

  $\rightarrow 0.09075 + 0.3025 + 0.27225 = 0.6655 \text{ V} \leq 4.65 \text{ V}$

  Thus, the best location for the nodes can be determined by using the condition formula.

■ Step 3: Splitting the System into Multiple Power Supplies

Go to Step 3 if the best location for the nodes cannot be calculated from the formulae. In the third step, there are multiple power supplies and the power supply system is split.

Splitting the Power Supply System

- Be sure to use a Power Supply Tap for each power supply when the network is supplied by two or more power supplies.
- Remove the fuses in the Power Supply Tap to split the power supply system.

Once the power supply system is split, return to Step 1 or 2, and determine the best location of the nodes in each system.

Power Supply Tap Configuration

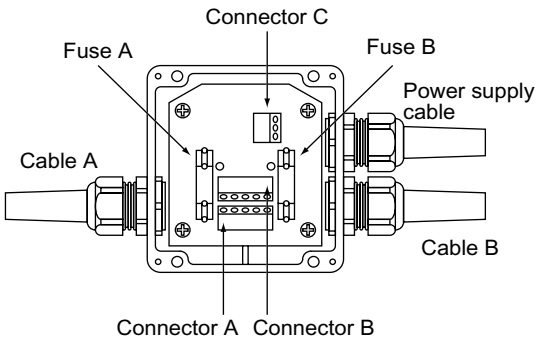

Model number	1485T-P2T5-T5
Description	• With reverse-current prevention • With ground terminal
Manufacturer	Allen-Bradley*

* Can be purchased from OMRON 24 SER VICE CO., Ltd.

Internal Circuitry of the Power Supply Tap

Remove fuse A when disconnecting cables on side A, and fuse B when disconnecting cables on side B.

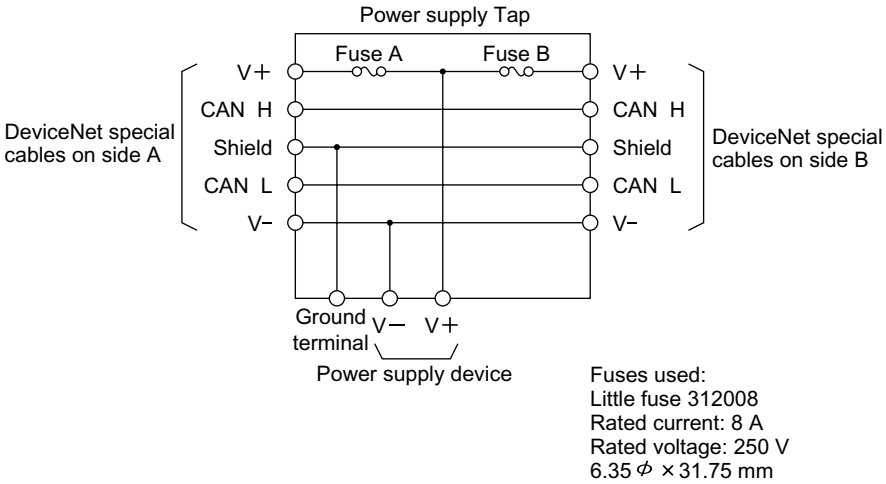

■ Dual Power Supply

Power Supply Taps can be used to construct a dual power supply system in the network because diodes are built-in. Dual power supply differs from parallel operation of power supplies, so the following restrictions apply.

■ Restrictions

Dual power supply is basically used to ensure backup power supply, not parallel operation of power supplies. Therefore, each power supply to be used must meet the power allocation specifications (must satisfy Steps 1 and 2).

6.3.2 Communications Line Noise Precautions

This section describes network grounding methods, noise countermeasures for communications lines, and noise countermeasures according to wiring methods.

■ Communications Line Noise

The communications line sends and receives high-speed pulse signals, and checks whether the data is correct by checking the sequence of the signals. If the amount of noise on the communications line is too great, the interference will alter the communications signal data, and communications will be impossible. Communications lines are more sensitive and require faster response than normal I/O lines, so be sure that noise does not interfere with communications. Use the preventative noise countermeasures described below when configuring the system to ensure smooth system start up.

■ Grounding the Network

Network grounding method and ground line are described below.

Method

The DeviceNet network must be grounded at one location only so that a ground loop is not created. The ground should also be connected as close as possible to the center of the Network. Connect the cable shield to the ground terminal on the communications power supply and then connect to a ground of 100 Ω max., as shown in the following diagrams.

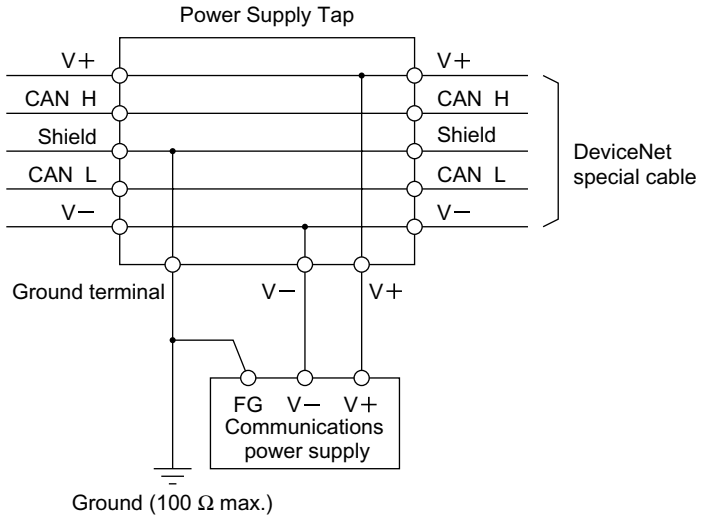

Note If more than one communications power supply is connected to the same network, ground only the one nearest the center of the network. Do not connect the shield wire at the other power supplies.

Note 1. Always ground the communications cable shield directly at one location only in the network.

2. Always ground to 100 Ω or less.

3. Always use a separate ground. Never use the same ground as for inverters or other drive system devices.

■ Communications Power Supply Noise Precautions

The communications power supply is the most important power supply in a DeviceNet network. The following measures will prevent noise in the communications power supply.

- Use the recommended power supply (OMRON S82H/S82J) for communications.
- Use an independent power supply for communications.
- Make sure to install a noise filter on the primary AC input side of the communications power supply.
- Always use a control system power supply for the primary AC side of the communications power supply that is not shared with power devices, such as inverters or motors.

If noise interference remains in cables after taking noise countermeasures, the following countermeasures may be effective.

DeviceNet Special Cable Shielding

Suspend the DeviceNet special cable shield wire without grounding it. This will filter the noise that flows from the ground to the DeviceNet special cable and will filter the noise current that flows in the shield wire.

Communications Power Supply

Suspend the communications power supply without grounding it. This will also filter the noise that flows from the communications power supply ground to the DeviceNet special cable or the noise current that flows in the DeviceNet special cable. The switching power supply is usually connected to the case and the capacitor as shown below. The FG terminal must be suspended and the control board for the power supply itself must be insulated.

【Switching Power Supply Configuration】

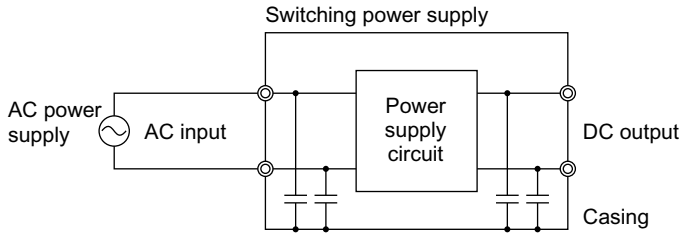

【Suspending the Communications Power Supply】

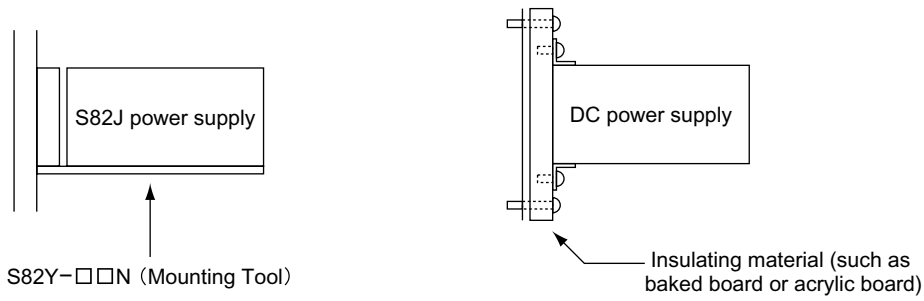

When using S82J power supply　　When using other power supplies

■ Noise Precautions According To Wiring Methods

Noise precautions according to wiring methods are described below.

- To prevent inductive noise, do not wire the communications line, SYSMAC power lines and power lines near each other. In particular, be sure to keep the power lines for inverters, motors, regulators, and contactors at least 300 mm away from both the communications lines and the SYSMAC power lines. Also, provide separate conduits or ducts for the communications lines and power lines.

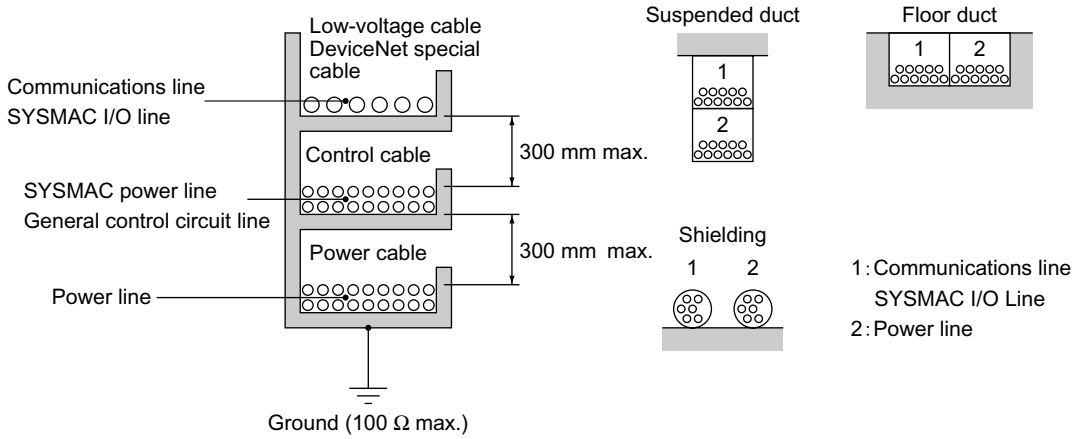

- Do not install communications lines and SYSMAC power lines on the control panels on which high-voltage devices are mounted.
- Because noise currents flow through metallic equipment (such as casings), the communications lines should be placed as far away from metallic equipment as possible.
- Ground the shield wire on the DeviceNet special cable at one point.
- If the same ground for the power line is used for the DeviceNet special cable and communications power supply, there is a possibility that noise may be transmitted through the ground line to the communications line. In order to avoid this, be sure that the power line ground and the grounds for the DeviceNet special cables and the communications power supply are located as far from each other as possible.

■ Noise Precautions for Peripheral Devices

Implement the following noise precautions for peripheral devices.

- Install surge suppressors on devices that generate noise, particularly devices that have an inductive component such as motors, transformers, solenoids, and magnetic coils.

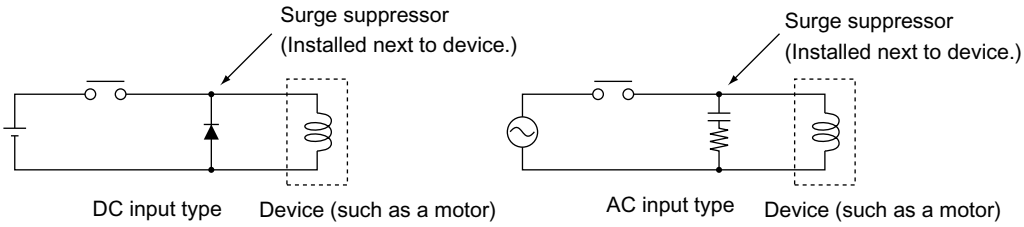

- If a surge suppressor does not fit on the device, such as a contactor, installing a ferrite core directly next to the device's contactors may be effective.

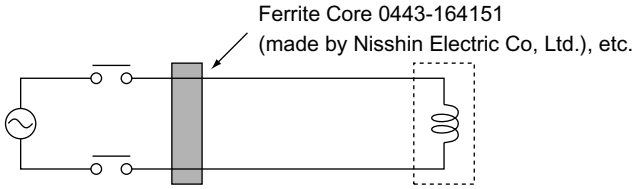

- Insert a line filter on the primary side of the communications power supply.
- When there are two or more communications power supplies, the DeviceNet special cables can be grounded by simply connecting a single Power Supply Tap near the center of the DeviceNet special cable. Do not ground shield wire at more than one place.

【When There Is One Power Supply】

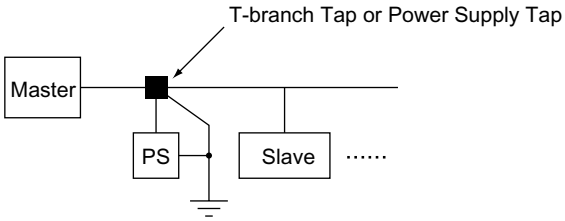

【When There Are Two or More Power Supplies】

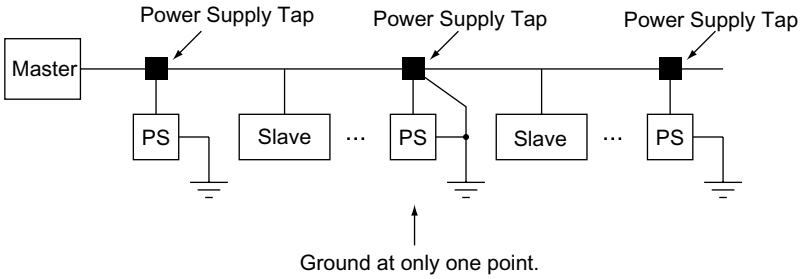

6.4 Overview of Remote I/O and Explicit Message Communications

This section provides an overview of Remote I/O communications and Explicit Message communications.

6.4.1 Remote I/O Communications

Remote I/O communications function enable automatic exchange of I/O data between slaves and a CPU Unit of the PC under which a DeviceNet Master Unit is mounted without special programming in the PC.

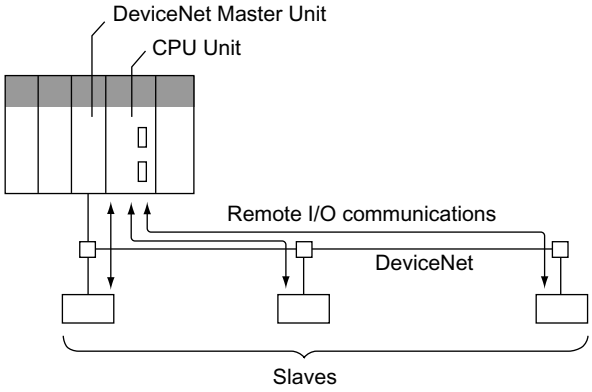

Each slave is allocated words in the I/O Memory in the CPU Unit under which the DeviceNet Master Unit is mounted. There are two methods of allocation: Free and fixed.

- User (I/O) Allocations:
  The user can allocate desired words for Slave I/O in the DeviceNet I/O Areas (Input Area, Output Area) in the I/O Memory. With the OMRON CS/CJ-series DeviceNet Master Units, the settings can be made without a DeviceNet Configurator.
- Fixed I/O Allocations:
  Slave I/O is allocated in the DeviceNet I/O Areas (Input Area, Output Area) in the I/O Memory in the same order as the slave node addresses.

6.4.2 Explicit Message Communications

Explicit Message communications function use Explicit Messages defined for DeviceNet to send and receive service requests. With a DeviceNet Unit, it is possible to receive service requests using Explicit Messages from PCs with OMRON Master Units or from DeviceNet masters by other vendors.

6.5 Remote I/O Communications

This section explains commands sent to a DeviceNet Unit from the master device and the responses sent from the DeviceNet Unit.

6.5.1 Basic Block

This section explains the basic block of commands sent to a DeviceNet Unit from the master device and the responses sent from the DeviceNet Unit to the master device. Commands and responses are in an 8-byte data block.

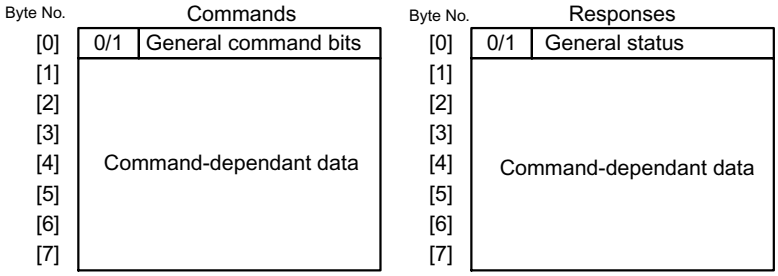

Both the commands and responses are separated into two sections. Byte 0 is a general area and bytes 1 to 7 make up the command-dependant data area. The command–dependant data area depends on the two types of commands, move commands and set/read commands. The type of command is defined by the highest bit of byte 0.

■ Block for Move Commands

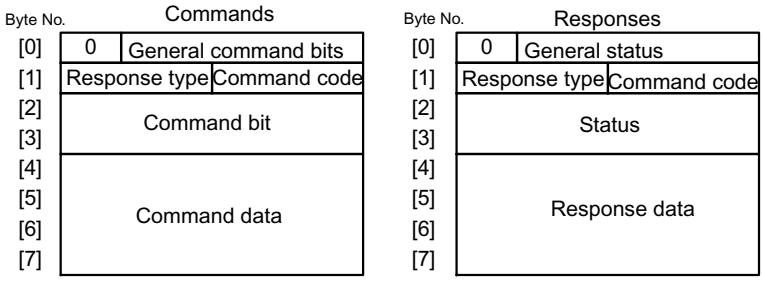

■ Block for Set/Read Commands

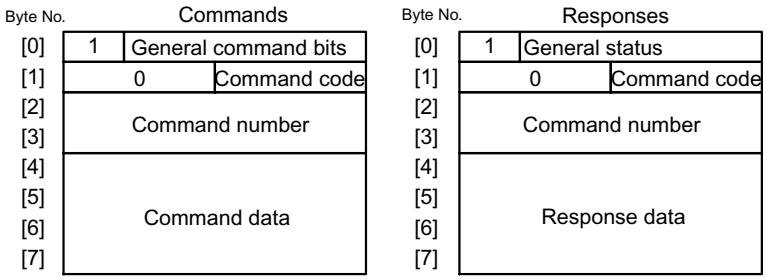

6

6.5.2 General Command Bits and Status

This section explains general command bits and status.

■ General Command Bits (Command)

The general command bit area is detailed below.

Table 6.2 General Command Bits

Byte	Bit 7	Bit 6	Bit 5	Bit 4	Bit 3	Bit 2	Bit 1	Bit 0
0	MOD	0	ALRST	STOP	0	0	SVON	C_STRT

Mode: MOD

Use the MOD bit to specify the data block for bytes 1 to 7.

- 0: Move command block
- 1: Set/read command block

Note The MOD bit alters the data block for bytes 1 to 7. Set it carefully.

Alarm Reset Command: ALRST

Set the ALRST bit to 1 to reset the present alarm/warning. When an alarm or warning occurs in the DeviceNet Unit or W-series Servo Driver, remove the cause of the alarm before setting this bit to 1. The alarm/warming will be cleared.

Always make sure this bit is set to 0 during normal operation and after an alarm has been cleared.

Emergency Stop Command: STOP

When the STOP bit is changed from 1 to 0, a move command is canceled and the servo of the W-series Servo Driver is turned OFF. If the axis is travelling, axis travel is stopped immediately and the servo of the W-series Servo Driver is turned OFF as soon as the Servomotor stops.

The STOP Command has negative logic to confirm that DeviceNet communications have been established. Therefore, set the bit to 1 for normal operation and 0 for emergency stops.

The emergency stop status will continue while this bit is set to 0. To release the emergency stop status, set the bit to 1. To turn ON the servo after releasing an emergency stop, set the Servo ON Command bit to 0 and then 1.

Servo ON Command: SVON

Set the SVON bit to 1 to turn ON the servo of the W-series Servo Driver. When the rising edge of the bit is detected, the servo of the W-series Servo Driver is turned ON and remains ON while the command bit is set to 1. When the command bit setting changes to 0, the servo is turned OFF.

If an alarm automatically turns OFF the servo of the W-series Servo Driver, the command bit must be set to 0 and then set to 1 again.

The servo cannot be turned ON in the following circumstances.

- When an alarm has been generated.
- When the main circuit power supply is OFF.
- During an emergency stop.
- When the deviation at the Servo Driver exceeds the positioning completed range.

Command Start Command: C_STRT

Set the C_STRT bit to 1 to start execution of the command specified by the command code. Always set the command code and command data before (or at the same time as) setting the C_STRT bit to 1.

Refer to *6.5.3 Move Commands for Remote I/O Communications* and *6.5.4 Set/Read Commands for Remote I/O Communications* for details on using command codes.

■ General Status (Response)

Details on the general status area are shown below.

Table 6.3 General Status Bits

Byte	Bit 7	Bit 6	Bit 5	Bit 4	Bit 3	Bit 2	Bit 1	Bit 0
0	MOD_R	READY	PWRON	STOP_R	ALRM	WARN	SVON_R	C_STRT_R

Mode: MOD_R

The MOD_R bit specifies the data block of bytes 1 to 7.

This bit will be the same as the mode given in the commands.

- 0: Response block for move commands
- 1: Response block for set/read commands

Ready: READY

The READY bit will be set to 1 when the DeviceNet Unit is ready to receive commands from the host device. The READY status will be 0 when the power is turned ON, and when the Unit Reset Command has been received and the DeviceNet Unit is initializing.

Main Power Supply Status: PWRON

The PWRON bit will be 1 when the main power supply of the W-series Servo Driver is turned ON. If the main power supply is turned OFF, the bit will be 0 and the Servo ON and other commands cannot be executed.

Emergency Stop: STOP_R

The STOP_R bit will be 1 when the Emergency Stop Command has been set to 0 and the DeviceNet Unit is in emergency stop status. Set the Emergency Stop Command to 1 to clear the emergency stop status, and this bit will change to 0. This status has negative logic.

Alarm: ALRM

The ALRM bit will be 1 when the DeviceNet Unit has detected an alarm. When all alarms have been cleared by the Alarm Reset Command, this bit will change to 0.

Warning: WARN

The WARN bit will be 1 when the DeviceNet Unit has detected a warning. When all warnings have been cleared by the Alarm Reset Command, this bit will change to 0.

When a warning has occurred, the commands other than data setting commands and the command that generated the warning can still be executed normally.

Servo ON: SVON_R

The SVON_R bit will be 1 when the Servo ON Command is set to 1 and the servo of the W-series Servo Driver is ON.

The SVON_R bit will be 0 in the following circumstances.

- When the Servo ON Command has been set to 0
- When the Emergency Stop Command has been set to 0
- When the Unit Reset Command has been set to 1
- When an alarm has occurred

Command Start Response: C_STRT_R

The C_STRT_R bit will be 1 when the Command Start Command has been set to 1. The host device can recognize that the DeviceNet Unit has received a command from the host device by checking that this bit is 1.

6.5.3 Move Commands for Remote I/O Communications

This section explains move commands for Remote I/O communications.

■ Commands

Details on commands for move commands are shown below.

Table 6.4 Commands for Move Commands

Byte	Bit 7	Bit 6	Bit 5	Bit 4	Bit 3	Bit 2	Bit 1	Bit 0	
0	0	0	ALRST	STOP	0	0	SVON	C_STRT	General command bits
1	Response type				Command code				
2	HOME	PTBL	STN	STEP	JOG	0	HOLD	CANCEL	Command bits
3	0	0	0	0	0	0	DIR	INC	
4	Command data								
5									
6									
7									

Command Codes

Command codes are used to specify positioning and other commands. To start execution of a command code, set the command code and command data first (or at the same time), and then change the Command Start Command from 0 to 1.

Table 6.5 Command Codes (Byte 1)

Command Codes	Description
0000 (0 Hex)	No-operation
0001 (1 Hex)	Direct operation
0010 (2 Hex)	Interrupt feeding
0011 (3 Hex)	Positioning with notch signal outputs
0100 (4 Hex)	Multi-speed positioning

Response Types

The response type in the commands specifies the type of data that will be stored as the response data in the responses. The DeviceNet Unit creates response data in the responses based on the specified response type.

Table 6.6 Response Type

Response Type	Response Data
0000 (0 Hex)	Command position (Command unit)
0001 (1 Hex)	Present position (Command unit)
0010 (2 Hex)	Position deviation (Command unit)
0011 (3 Hex)	Command speed (1000 Command unit)
0100 (4 Hex)	Present speed (1000 Command unit)
0101 (5 Hex)	Torque (%)
1010 (A Hex)	Station number • While stopping: station number of the present value • While moving: station number at startup
1011 (B Hex)	Point table number

Command Bits

The command bits for move commands are described below.

Cancel Command: CANCEL (Byte 2, Bit 0)

If the Cancel Command is set to 1 during execution of a move command, the execution of the move command will be stopped and the Servomotor will decelerate to a stop. The remaining travel distance will be canceled.

Hold Command: HOLD (Byte 2, Bit 1)

If the Hold Command is set to 1 during execution of a move command, the execution of the move command will be held and the Servomotor will decelerate to a stop. The DeviceNet Unit will wait for command execution to be restarted. Set the Hold Command to 0 again to restart the execution of a move command.

JOG Command: JOG (Byte 2, Bit 3)

The DeviceNet Unit will start JOG operation when it detects the rising edge of the JOG bit. JOG operation will continue while this bit is set to 1.

When the JOG bit is set to 0, the Servomotor will decelerate to a stop and the JOG operation will end. The direction for JOG is determined by the Movement Direction set in the command data.

An override can be set for this command in the command data. However, it is clamped at the maximum speed. The override can be from 0% to 200% of the parameter speed or a specific speed can be set in the command data. Which method is used depends on Pn830 (JOG Unit Selection).

Settings Data Area	Description	
Movement direction	0: Positive direction, 1: Negative direction	
Command data	When Pn830 = 0	Set an override value (0 to 200). Set to 100 when not using the override function.
	When Pn830 = 1	Set the JOG speed.

Step Command: STEP (Byte 2, Bit 4)

The DeviceNet Unit will start step operation from the present position when it detects the rising edge of the STEP bit. While the STEP bit is set to 1, the axis will travel only the distance set in the specified parameter. If the STEP bit is set to 0 during step operation, the Servomotor will decelerate to a stop and the step operation will end. The remaining travel distance will be canceled.

The direction of movement for step operations is determined by the Movement Direction set in the command data. The number of the step distance (0 to 3) is also set in the command data. The parameter data set in Pn844 to Pn847 will be used for the step distance.

Settings Data Area	Description
Movement direction	0: Positive direction, 1: Negative direction
Command data	Set the selection number for step distance. 0: Uses Pn844 data. 1: Uses Pn845 data. 2: Uses Pn846 data. 3: Uses Pn847 data.

Station Command: STN (Byte 2, Bit 5)

The DeviceNet Unit will start station operation when it detects the rising edge of the STN bit. If this command is set to 0 while the axis is travelling, the Servomotor will decelerate to a stop and the station operation will end. The remaining travel distance will be cancelled.

Settings Data Area	Description
Movement direction	0: Positive direction, 1: Negative direction
Absolute/relative value	Specify whether the station number is an absolute value or relative value. 0: To specify the absolute value for the station number. 1: To specify the relative value for the station number.
Command data	Specify the target station number.

Point Table Command: PTBL (Byte 2, Bit 6)

The DeviceNet Unit will start point table operation when it detects the rising edge of the PTBL bit. If this command is set to 0 while the axis is travelling, the Servomotor will decelerate to a stop and the point table operation will end. The remaining travel distance will be cancelled.

Settings Data Area	Description
Absolute/relative value	Specify whether the position data in the point table is an absolute value or relative value.
Command data	Specify the point table number to be used.

Origin Search Command: HOME (Byte 2, Bit 7)

The DeviceNet Unit will start an origin search when it detects the rising edge of the HOME bit. If this command is set to 0 while the axis is travelling, the Servomotor will decelerate to a stop and the origin search will end. The origin search will not continue even if the HOME bit is set to 1 again.

The type of origin search depends on the Origin Search Mode setting in Pn800.

Relative Specification: INC (Byte 3, Bit 0)

The INC bit specifies whether the data that indicates a position is used as an absolute value or a relative value. Set this bit to 0 to specify an absolute position and to 1 to specify a relative position.

This setting is used for the following commands.

- Station Command
- Point Table Command
- Positioning Command

Movement Direction: DIR (Byte 3, Bit 1)

The DR bit specifies the movement direction. Set this bit to 0 for positive direction and to 1 for negative direction.

This specification is used for the following commands.

- JOG Command
- Step Command
- Station Command

The movement direction specification is disabled during normal positioning.

■ Responses

The responses for move commands are shown below.

Table 6.7 Responses for Move Commands

Byte	Bit 7	Bit 6	Bit 5	Bit 4	Bit 3	Bit 2	Bit 1	Bit 0	
0	0	READY	PWRON	STOP_R	ALRM	WARN	SVON_R	C_STRT_R	General status
1	Response type				Command code				
2	HOME_R	PTBL_R	STN_R	STEP_R	JOG_R	0	HOLD_R	PRGS	Status
3	POT	NOT	INPOS	NEAR	HOME_P	0	DIR_R	INC_R	
4	Response data								
5									
6									
7									

Status

The status for move commands is described below.

Progressing Flag: PRGS (Byte 2, Bit 0)

The PRGS bit is set to 1 during the execution of a command. For move commands, this flag will be set to 1 while outputting to the W-series Servo Driver.

When command execution has been completed or when a Cancel Command or other stop command has been received, the Progressing Flag is set to 0.

Holding Flag: HOLD_R (Byte 2, Bit 1)

The HOLD_R bit is set to 1 when a Hold Command is received from the host device and for the duration of the hold.

The host device can confirm that the DeviceNet Unit correctly received the Hold Command by checking that the Holding Flag is set to 1.

JOG Flag: JOG_R (Byte 2, Bit 3)

The JOG_R bit reflects the status of the JOG Command. The host device can confirm by the change of status of this flag that the DeviceNet Unit has correctly received a change in the JOG Command.

This flag is set to 1 even if the JOG operation cannot be executed because of a Servo OFF status, for example. The user must monitor for alarms during the JOG operation. The host device can confirm that the JOG operation is being executed by checking that the Progressing Flag is set to 1.

The movement direction during JOG operation can be checked using the Movement Direction Flag: DIR_R.

Step Flag: STEP_R (Byte 2, Bit 4)

The STEP_R bit reflects the status of the Step Command. The host device can confirm by the change of status of this flag that the DeviceNet Unit has correctly received a change in the Step Command.

This flag is set to 1 even if the step operation cannot be executed because of a Servo OFF status, for example. The user must monitor for alarms during the step operation. The host device can confirm that the step operation is being executed by checking that the Progressing Flag is set to 1.

Station Flag: STN_R (Byte 2, Bit 5)

The STN_R bit reflects the status of the Station Command. The host device can confirm by the change of status of this flag that the DeviceNet Unit has correctly received a change in the Station Command.

This flag is set to 1 even if the station operation cannot be executed because of a Servo OFF status, for example. The user must monitor for alarms during station operation. The host device can confirm that the station operation is being executed by checking that the Progressing Flag is set to 1.

Point Table Flag: PTBL_R (Byte 2, Bit 6)

The PTBL_R bit reflects the status of the Point Table Command. The host device can confirm by the change of status of this flag that the DeviceNet Unit has correctly received a change in the Point Table Command.

This flag is set to 1 even if the point table operation cannot be executed because of a Servo OFF status, for example. The user must monitor for alarms during point table operation. The host device can confirm that the point table operation is being executed by checking that the Progressing Flag is set to 1.

Origin Search Flag: HOME_R (Byte 2, Bit 7)

The HOME_R bit reflects the status of the Origin Search Command. The host device can confirm by the change of status of this flag that the DeviceNet Unit has correctly received a change in the Origin Search Command.

This flag is set to 1 even if the origin search cannot be executed because of a Servo OFF status, for example. The user must monitor for alarms during origin search. The host device can confirm that the origin search is being executed by checking that the Progressing Flag is set to 1.

Relative Specification Flag: INC_R (Byte 3, Bit 0)

The INC_R bit reflects the status of the Relative Specification. The host device can confirm by the change of status of this flag that the DeviceNet Unit has correctly received a change in the relative specification.

Movement Direction Flag: DIR_R (Byte 3, Bit 1)

The DIR_R bit reflects the status of the Movement Direction Command. The host device can confirm by the change of status of this flag that the DeviceNet Unit has correctly received a change in the Movement Direction.

Origin Flag: HOME_P (Byte 3, Bit 3)

The HOME_P bit is set to 1 when the Servomotor is within the origin range. The origin range is set in Pn806 (Zero Position Output Width).

When an incremental position detection system is used, this flag cannot be set to 1 for the period from when power is turned ON to the W-series Servo Driver until the initial origin search has been completed.

Near Signal Flag: NEAR (Byte 3, Bit 4)

The NEAR bit is set to 1 when the present position is within the In-position range. When the present position is outside the In-position range, the flag is set to 0. The In-position range is set in Pn852 (Positioning Near Range).

In-position Flag: INPOS (Byte 3, Bit 5)

The INPOS bit is set to 1 when the present position is within the positioning completed range of the target position. The flag is set to 0 when the present position is outside the positioning completed range. The In-position range is set in Pn850 (Positioning Completion Range).

Negative Limit Input: NOT (Byte 3, Bit 6)

The NOT bit indicates the status of the reverse rotation drive prohibit input signal for the external input connected to CN1 on the W-series Servo Driver.

Positive Limit Input: POT (Byte 3, Bit 7)

The POT bit indicates the status of the forward rotation drive prohibit input signal for the external input connected to CN1 on the W-series Servo Driver.

6.5.4 Set/Read Commands for Remote I/O Communications

This section explains set/read commands for Remote I/O communications.

■ Commands

Details on bytes 1 to 7 of the commands for set/read commands (MOD = 1) are shown below.

The response type does not need to be specified for set/read commands.

Table 6.8 Set/Read Commands

Byte	Bit 7	Bit 6	Bit 5	Bit 4	Bit 3	Bit 2	Bit 1	Bit 0	
0	1	0	ALRST	STOP	0	0	SVON	C_STRT	General command bit
1	0				Command code				
2	Command number								
3									
4	Command data								
5									
6									
7									

Command Codes

A list of command codes is shown in the following table. Set “No-operation” for commands that will not be executed.

The command codes in the responses will basically be a copy of the command codes in the commands. A warning for parameter setting error will be returned when the parameter number is different or the data is outside the setting range for the parameter.

Table 6.9 Command Codes

Command Code	Description
0000 (0 Hex)	No-operation
1000 (8 Hex)	Parameter Read Command
1001 (9 Hex)	Parameter Write Command
1010 (A Hex)	Present Position Setting Command
1011 (B Hex)	Origin Setting Command
1100 (C Hex)	Alarm Read Command
1101 (D Hex)	Monitor Mode Read Command
1110 (E Hex)	Unit Reset Command

■ Responses

Details on bytes 1 to 7 of the responses for set/read commands (MOD = 1) are shown below.

Table 6.10 Responses for Set/Read Commands

Byte	Bit 7	Bit 6	Bit 5	Bit 4	Bit 3	Bit 2	Bit 1	Bit 0	
0	1	READY	PWRON	ESTP_R	ALRM	WARN	SVON_R	C_STRT_R	General status
1	0				Command code				
2	Command number								
3									
4	Response data								
5									
6									
7									

■ Parameter Read Command (Command Code: 1000, 8 Hex)

The Parameter Read Command reads parameters for the W-series Servo Driver and DeviceNet Unit.

To use the Parameter Read Command, make the following settings and then change the Command Start Command from 0 to 1.

- Command code
- Parameter number

Table 6.11 Commands for Parameter Read Command

Byte	Bit 7	Bit 6	Bit 5	Bit 4	Bit 3	Bit 2	Bit 1	Bit 0
0	1	0	ALRST	ESTP	0	0	SVON	C_STRT
1	0				8 Hex			
2	Parameter number							
3								
4	0							
5								
6								
7								

Table 6.12 Responses for Parameter Read Command

Byte	Bit 7	Bit 6	Bit 5	Bit 4	Bit 3	Bit 2	Bit 1	Bit 0
0	1	READY	PWRON	ESTP_R	ALRM	WARN	SVON_R	C_STRT_R
1	0				8 Hex			
2	Parameter number							
3								
4	Parameter data							
5								
6								
7								

■ Parameter Write Command (Command Code: 1001, 9 Hex)

The Parameter Write Command rewrites parameters for the W-series Servo Driver and DeviceNet Unit.

To use the Parameter Write Command, make the following settings and then change the Command Start Command from 0 to 1.

- Command code
- Parameter number
- Parameter data

Table 6.13 Commands for Parameter Write Command

Byte	Bit 7	Bit 6	Bit 5	Bit 4	Bit 3	Bit 2	Bit 1	Bit 0
0	1	0	ALRST	STOP	0	0	SVON	C_STRT
1	0				9 Hex			
2	Parameter number							
3								
4	Parameter data							
5								
6								
7								

6

Table 6.14 Responses for Parameter Write Command

Byte	Bit 7	Bit 6	Bit 5	Bit 4	Bit 3	Bit 2	Bit 1	Bit 0
0	1	READY	PWRON	STOP_R	ALRM	WARN	SVON_R	C_STRT_R
1	0				9 Hex			
2	Parameter number							
3								
4	Parameter data							
5								
6								
7								

■ Present Position Setting Command (Command Code: 1010, A Hex)

The Present Position Setting Command sets the specified value as the present position of the Servomotor.

To use the Present Position Setting Command, make the following settings and then change the Command Start Command from 0 to 1.

- Command code
- Present position data

Table 6.15 Commands for Present Position Setting Command

Byte	Bit 7	Bit 6	Bit 5	Bit 4	Bit 3	Bit 2	Bit 1	Bit 0
0	1	0	ALRST	STOP	0	0	SVON	C_STRT
1	0				A Hex			
2	0							
3								
4	Present position data							
5								
6								
7								

Table 6.16 Responses for Present Position Setting Command

Byte	Bit 7	Bit 6	Bit 5	Bit 4	Bit 3	Bit 2	Bit 1	Bit 0
0	1	READY	PWRON	STOP_R	ALRM	WARN	SVON_R	C_STRT_R
1	0				A Hex			
2	0							
3								
4	Present position data							
5								
6								
7								

■ Origin Setting Command (Command Code: 1011, B Hex)

When an absolute encoder is used, the Origin Setting Command sets the present position of the Servomotor as the origin. This command is disabled when an incremental encoder is used.

To use the Origin Setting Command, make the command code settings and then change the Command Start Command from 0 to 1. There is no need to set the data area.

When the origin has been set, an offset value is set for parameter Pn809 (Absolute Position Setting). This set value is cleared when the W-series Servo Driver control power supply is turned OFF. After the Origin Setting Command has been executed, therefore, the parameter must be stored in flash ROM by executing the Unit Reset Command.

Table 6.17 Commands for Origin Setting Command

Byte	Bit 7	Bit 6	Bit 5	Bit 4	Bit 3	Bit 2	Bit 1	Bit 0
0	1	0	ALRST	STOP	0	0	SVON	C_STRT
1	0				B Hex			
2	0							
3								
4	0							
5								
6								
7								

Table 6.18 Responses for Origin Setting Command

Byte	Bit 7	Bit 6	Bit 5	Bit 4	Bit 3	Bit 2	Bit 1	Bit 0
0	1	READY	PWRON	STOP_R	ALRM	WARN	SVON_R	C_STRT_R
1	0				B Hex			
2	0							
3								
4	0							
5								
6								
7								

■ Alarm Read Command (Command Code: 1100, C Hex)

The Alarm Read Command reads the last four alarms that have occurred on the W-series Servo Driver and the DeviceNet Unit. Refer to *10.3 Alarm/Warning Codes and Error Codes for Message Communications* to check alarms.

To use the Alarm Read Command, make the command code settings and then change the Command Start Command from 0 to 1.

Table 6.19 Commands for Alarm Read Command

Byte	Bit 7	Bit 6	Bit 5	Bit 4	Bit 3	Bit 2	Bit 1	Bit 0
0	1	0	ALRST	STOP	0	0	SVON	C_STRT
1	0				C Hex			
2	0							
3								
4	0							
5								
6								
7								

Table 6.20 Responses for Alarm Read Command

Byte	Bit 7	Bit 6	Bit 5	Bit 4	Bit 3	Bit 2	Bit 1	Bit 0
0	1	READY	PWRON	STOP_R	ALRM	WARN	SVON_R	C_STRT_R
1	0				C Hex			
2	0							
3								
4	Last alarm code							
5	Second last alarm code							
6	Third last alarm code							
7	Fourth last alarm code							

■ Monitor Mode Read Command (Command Code: 1101, D Hex)

The Monitor Mode Read Command reads the I/O status and internal data for the various signals displayed on the Servo Driver.

To use the Monitor Mode Read Command, make the following settings and then change the Command Start Command from 0 to 1.

- Command code
- Monitor number

(The monitor number indicates the three characters following Un in □□□ displayed on the Servo Driver. For Un00C and Un00D, only the lowest 16 bits are read.)

Table 6.21 Commands for Monitor Mode Read Command

Byte	Bit 7	Bit 6	Bit 5	Bit 4	Bit 3	Bit 2	Bit 1	Bit 0
0	1	0	ALRST	STOP	0	0	SVON	C_STRT
1	0				D Hex			
2	Monitor No.							
3								
4	0							
5								
6								
7								

Table 6.22 Responses for Monitor Mode Read Command

Byte	Bit 7	Bit 6	Bit 5	Bit 4	Bit 3	Bit 2	Bit 1	Bit 0
0	1	READY	PWRON	STOP_R	ALRM	WARN	SVON_R	C_STRT_R
1	0				D Hex			
2	Monitor No.							
3								
4	Monitor data							
5								
6	0							
7								

■ Unit Reset Command (Command Code: 1110, E Hex)

When the Unit Reset Command is executed, the parameters for the W-series Servo Driver and the DeviceNet Unit are stored in flash ROM and then the DeviceNet Unit is restarted.

To use the Unit Reset Command, make the command code settings and then change the Command Start Command from 0 to 1.

When the DeviceNet Unit is resetting the Unit, the Unit Ready Flag is set to 0. When the reset has been completed, the flag is set to 1.

Table 6.23 Commands for Unit Reset Command

Byte	Bit 7	Bit 6	Bit 5	Bit 4	Bit 3	Bit 2	Bit 1	Bit 0
0	1	0	ALRST	STOP	0	0	SVON	C_STRT
1	0				E Hex			
2	0							
3								
4	0							
5								
6								
7								

Table 6.24 Responses for Unit Reset Command

Byte	Bit 7	Bit 6	Bit 5	Bit 4	Bit 3	Bit 2	Bit 1	Bit 0
0	1	READY	PWRON	STOP_R	ALRM	WARN	SVON_R	C_STRT_R
1	0				E Hex			
2	0							
3								
4	0							
5								
6								
7								

6.6 Details on Move Commands for Remote I/O Communications

This section describes how to use the move commands.

6.6.1 No-operation (Command Code: 0000, 0 Hex)

Move commands performed using the No-operation Command are described below.

"No-operation" is a method in which the command is executed using only the command bit, and not the command code.

■ JOG Command (Command Bit: JOG = 1)

This section describes the JOG Command function, related parameters, operation, and command method.

Function

While the JOG Command is set to 1, the axis travels in the direction specified as the movement direction at the speed specified in the parameters. Parameter settings are used for acceleration/deceleration speeds and acceleration/deceleration types.

The speed during movement can be changed by changing the override value.

Related Parameters

Object	Attribute	No.	Name	Setting Range	Unit	Effective Timing	Default Setting	Type
0x64	#58	Pn829	Filter Selection	0, 1, 2, 3	–	Immediate	0	B
	#59	Pn830	JOG Unit Selection	0, 1	–	Immediate	0	B
	#60	Pn831	JOG Speed	1 to 240,000	× 1000 steps/min	Immediate	24,000	B
	#61	Pn832	JOG Acceleration Time	1 to 10,000	ms	Immediate	100	B
	#62	Pn833	JOG Deceleration Time	1 to 10,000	ms	Immediate	100	C
	#63	Pn834	JOG Switch Speed	1 to 240,000	× 1000 steps/min	Immediate	12,000	C
	#64	Pn835	JOG Second Acceleration/Deceleration Time	1 to 10,000	ms	Immediate	200	C
	#65	Pn836	JOG Acceleration/Deceleration Type	0, 1, 2, 3	–	Immediate	0	B
	#70	Pn840	Time Constant for Exponential Curve	4 to 1,000	ms	Immediate	25	C
	#71	Pn841	Bias Speed	1 to 240,000	× 1000 steps/min	Immediate	0	C
	#72	Pn842	Time Constant of Moving Average	4 to 10,000	ms	Immediate	25	C
	#73	Pn843	Maximum Speed	1 to 240,000	× 1000 steps/min	Immediate	24,000	B

Operation

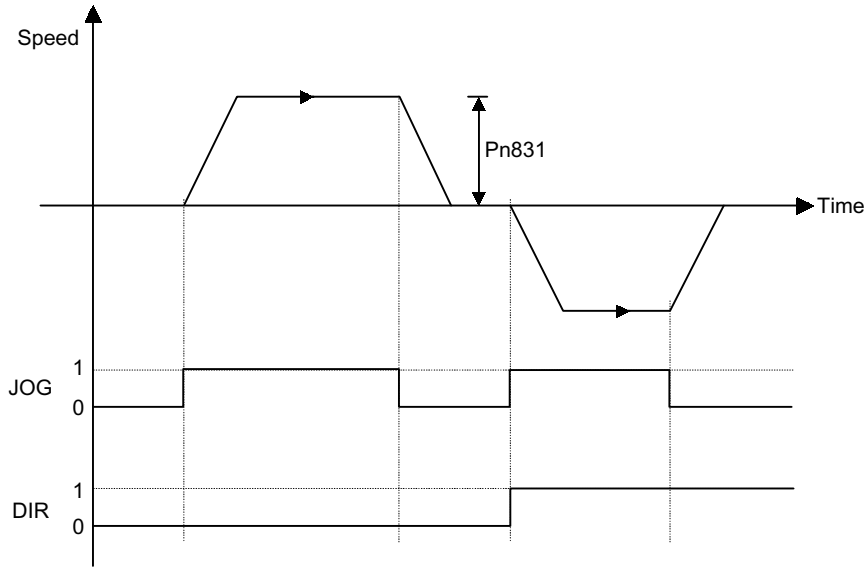

Command Method

1. Set the Servo ON Command (byte 0, bit 1) to 1.
2. Set the movement direction (byte 3, bit 1).
3. Set the override value. The Pn830 setting determines whether the override will be set as a ratio (%) or as a speed (× 1000 steps/min).
4. Set the JOG Command (byte 2, bit 3) to 1.

Byte	Bit 7	Bit 6	Bit 5	Bit 4	Bit 3	Bit 2	Bit 1	Bit 0
0	0	0	0	1	0	0	1	0
1	Response type				0 Hex			
2	0	0	0	0	1	0	0	0
3	0	0	0	0	0	0	DIR	0
4	Override value (0 to 200 [%]) or JOG speed (0 to 240,000 [× 1000 steps/min])							
5								
6								
7								

■ Step Command (Command Bit: STEP = 1)

This section describes the Step Command function, related parameters, operation, and command method.

Function

When the Step Command is set to 1, the axis will travel from the present position in the set direction for the set travel distance and then stop. The travel distance can be selected from four parameters.

Related Parameters

Object	Attribute	No.	Name	Setting Range	Unit	Effective Timing	Default Setting	Type
0x64	#51	Pn821	Speed	1 to 240,000	× 1000 steps/min	Immediate	24,000	B
	#52	Pn822	Acceleration Time	1 to 10,000	ms	Immediate	100	B
	#53	Pn823	Deceleration Time	1 to 10,000	ms	Immediate	100	C
	#54	Pn824	Switch Speed	1 to 240,000	× 1000 steps/min	Immediate	12,000	C
	#55	Pn825	Second Acceleration/ Deceleration Time	1 to 10,000	ms	Immediate	200	B
	#56	Pn826	Acceleration/Deceleration Type	0, 1, 2, 3	–	Immediate	0	B
	#58	Pn829	Filter Selection	0, 1, 2, 3	–	Immediate	0	B
	#70	Pn840	Time Constant for Exponential Curve	4 to 1,000	ms	Immediate	25	C
	#71	Pn841	Bias Speed	0 to 240,000	× 1000 steps/min	Immediate	0	C
	#72	Pn842	Time Constant of Moving Average	4 to 1,000	ms	Immediate	25	C
	#73	Pn843	Maximum Speed	1 to 240,000	× 1000 steps/min	Immediate	24,000	B
	#74	Pn844	Step Distance 1	0 to 99, 999, 999	Steps	Immediate	1	B
	#75	Pn845	Step Distance 2	0 to 99, 999, 999	Steps	Immediate	10	B
	#76	Pn846	Step Distance 3	0 to 99, 999, 999	Steps	Immediate	100	B
	#77	Pn847	Step Distance 4	0 to 99, 999, 999	Steps	Immediate	1,000	B

Operation

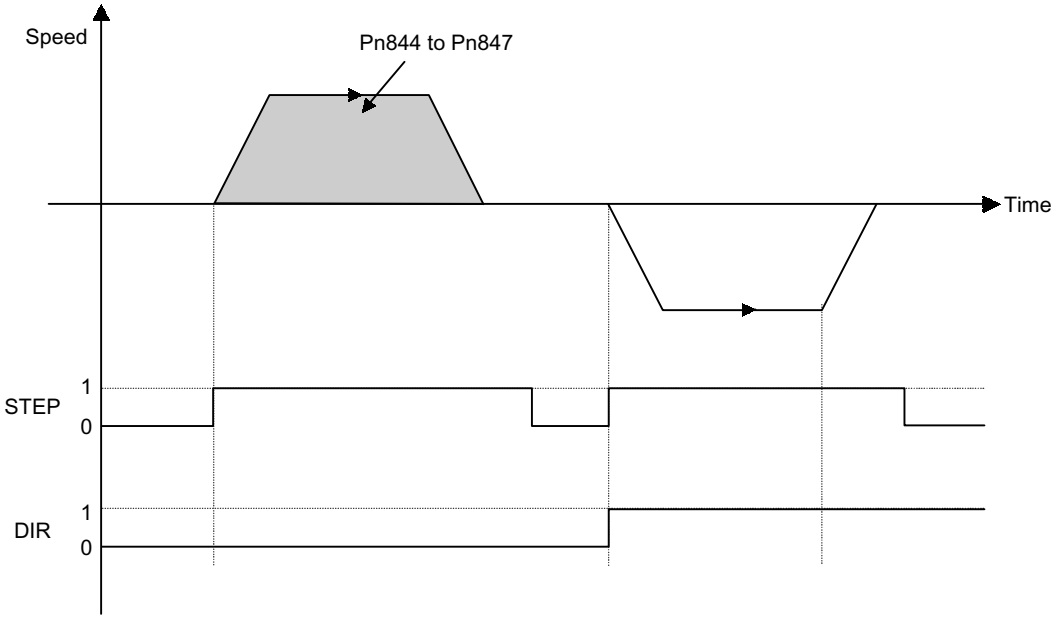

Command Method

1. Set the Servo ON Command (byte 0, bit 1) to 1.
2. Set the movement direction (byte 3, bit 1).
3. Select the travel distance to be used for step operation from within the range from Pn844 (=0) to Pn847 (=3).
4. Set the Step Command (byte 2, bit 4) to 1.

Byte	Bit 7	Bit 6	Bit 5	Bit 4	Bit 3	Bit 2	Bit 1	Bit 0
0	0	0	0	1	0	0	1	0
1	Response type				0 Hex			
2	0	0	0	1	0	0	0	0
3	0	0	0	0	0	0	DIR	0
4	Step distance selection (0 to 3)							
5								
6								
7								

■ Station Command (Command Bit: STN = 1)

This section describes the Station Command function, related parameters, operation, and command method.

Function

The Station Command can be used when the DeviceNet Unit is used in a rotating system.

One rotation of the Servomotor is divided into a specified number of stations and station numbers are allocated.

When a station number is specified, the axis travels in the specified direction to the specified position.

Related Parameters

The same speed and acceleration/deceleration data is used as for the Positioning Command.

Object	Attribute	No.	Name	Setting Range	Unit	Effective Timing	Default Setting	Type
0x64	#32	Pn812	Coordinate Type	0, 1	–	Immediate	0	C
	#33	Pn813	Command Unit/R	1 to 1,500,000	Steps	Immediate	360,000	C
	#93	Pn853	Direction	0, 1	–	Immediate	0	B
	#100	Pn85A	Station	1 to 32, 767	–	Immediate	1	B

6

Operation

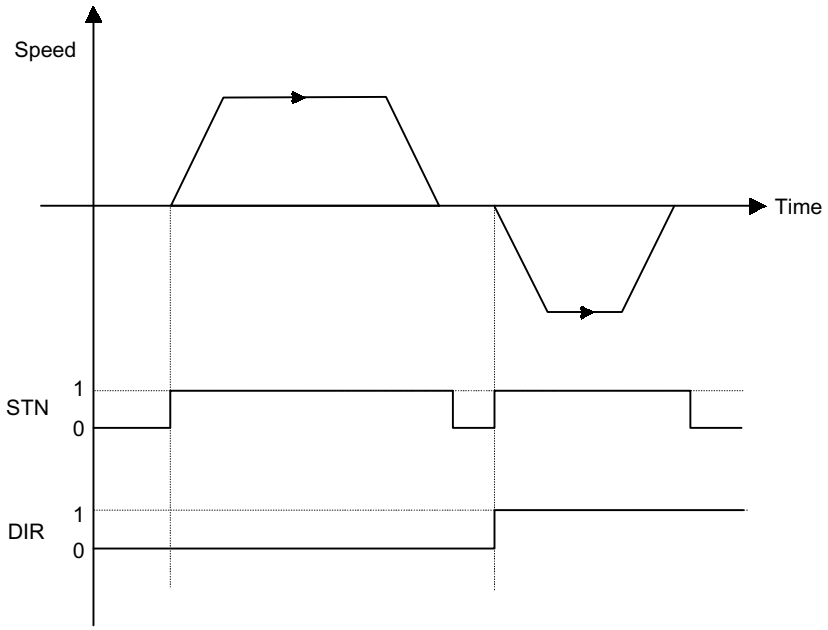

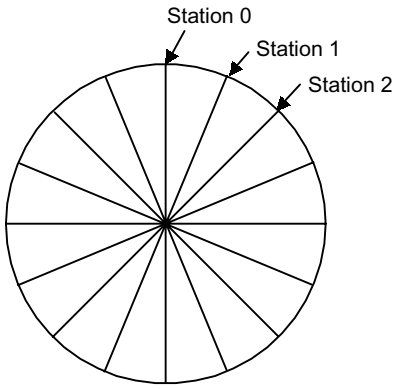

Command Method

1. Set the Servo ON Command (byte 0, bit 1) to 1.
2. Set the movement direction (byte 3, bit 1).
   The movement direction setting is disabled when the Pn853 setting is 1 (travel the shortest distance).
3. Set absolute/incremental (byte 3, bit 0). If an incremental position has been specified, set the value corresponding to (target station number) - (present station number) in bytes 4 to 7.
4. Set the target station number.
5. Set the Station Command (byte 2, bit 5) to 1.

Note When a relative value is specified, set the station number "n" so that the following formula is satisfied:
The movement amount per station × station number "n" ≤ 99,999,999

Byte	Bit 7	Bit 6	Bit 5	Bit 4	Bit 3	Bit 2	Bit 1	Bit 0
0	0	0	0	1	0	0	1	0
1	Response type				0 Hex			
2	0	0	1	0	0	0	0	0
3	0	0	0	0	0	0	DIR	INC
4	Target station number							
5								
6								
7								

■ Point Table Command (Command Bit: PTBL = 1)

This section describes the Point Table Command function, related parameters, operation, and command method.

Function

The Point Table Command performs positioning at the position and speed stored in advance in the point table by specifying the point table number.

Related Parameters

Object	Attribute	No.	Name	Setting Range	Unit	Effective Timing	Default Setting	Type
0x64	#51	Pn821	Speed	1 to 240,000	× 1000 steps/min	Immediate	24,000	B
	#52	Pn822	Acceleration Time	1 to 10,000	ms	Immediate	100	B
	#53	Pn823	Deceleration Time	1 to 10,000	ms	Immediate	100	C
	#54	Pn824	Switch Speed	1 to 240,000	× 1000 steps/min	Immediate	12,000	C
	#55	Pn825	Second Acceleration/ Deceleration Time	1 to 10,000	ms	Immediate	200	B
	#56	Pn826	Acceleration/Decelera-tion Type	0, 1, 2, 3	–	Immediate	0	B
	#58	Pn829	Filter Selection	0, 1, 2, 3	–	Immediate	0	B
	#70	Pn840	Time Constant for Exponential Curve	4 to 1,000	ms	Immediate	25	C
	#71	Pn841	Bias Speed	0 to 240,000	× 1000 steps/min	Immediate	0	C
	#72	Pn842	Time Constant of Mov-ing Average	4 to 1,000	ms	Immediate	25	C
	#73	Pn843	Maximum Speed	1 to 240,000	× 1000 steps/min	Immediate	24,000	B

Object	Attribute	No.	Name	Setting Range	Unit	Effective Timing	Default Setting	Type
0x65	#50	Pn900	Position_1	±99,999,999	Steps	Immediate	0	B
	#51	Pn901	Position_2	±99,999,999	Steps	Immediate	0	B
	:	:	:	:	:	:	:	:
	#99	Pn931	Position_50	±99,999,999	Steps	Immediate	0	B
	#150	Pn940	Speed_1	1 to 240,000	× 1000 steps/min	Immediate	24,000	B
	#151	Pn941	Speed_2	1 to 240,000	× 1000 steps/min	Immediate	24,000	B
	:	:	:	:	:	:	:	:
	#199	Pn971	Speed_50	1 to 240,000	× 1000 steps/min	Immediate	24,000	B

Operation

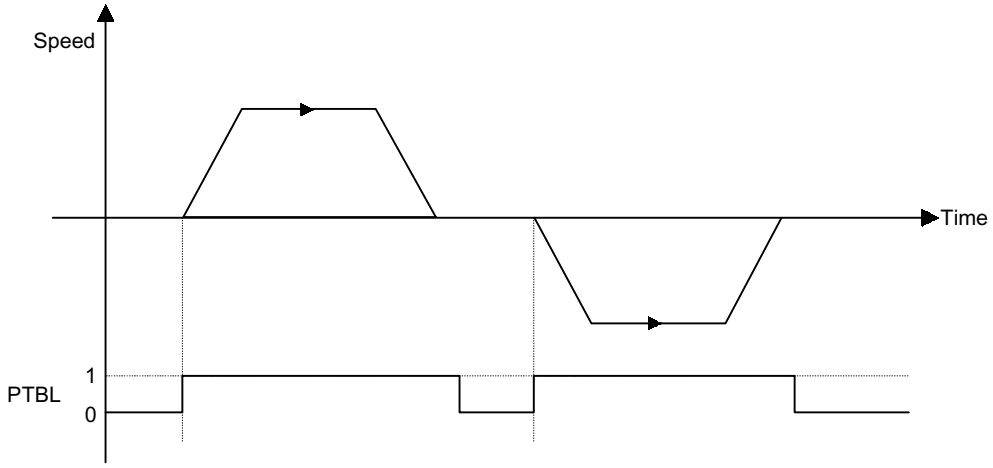

Command Method

1. Set the Servo ON Command (byte 0, bit 1) to 1.
2. Set absolute/relative (byte 3, bit 0). If a relative position has been specified, the target position will be (present position) + (position stored in point table).
3. Set the point table number to be specified.
4. Set the Point Table Command (byte 2, bit 6) to 1.

Byte	Bit 7	Bit 6	Bit 5	Bit 4	Bit 3	Bit 2	Bit 1	Bit 0
0	0	0	0	1	0	0	1	0
1	Response type				0 Hex			
2	0	1	0	0	0	0	0	0
3	0	0	0	0	0	0	0	INC
4	Point table number to be specified							
5								
6								
7								

■ Origin Search Command (Command Bit: HOME =1)

This section describes the Origin Search Command function, related parameters, operation, and command method.

Function

The Origin Search Command moves the axis in the specified direction, and sets the origin based on the specified origin search mode.

When an absolute position detection system has been selected, the positioning will be performed to the origin.

Related Parameters

Object	Attribute	No.	Name	Setting Range	Unit	Effective Timing	Default Setting	Type
0x64	#10	Pn800	Origin Search Mode	0 to 6	–	Immediate	0	B
	#11	Pn801	Origin Search Function Selection	0 to 7	–	Power-up	1	B
	#12	Pn802	Origin Search High Speed	1 to 240,000	× 1000 steps/min	Immediate	10,000	B
	#13	Pn803	Origin Search Proximity Speed	1 to 240,000	× 1000 steps/min	Immediate	1,000	B
	#14	Pn804	Origin Search Compensation Speed	1 to 240,000	× 1000 steps/min	Immediate	500	B
	#15	Pn805	Origin Compensation Value	0 to 99,999,999	Steps	Immediate	0	B
	#16	Pn806	Zero Position Output Width	0 to 32, 767	Steps	Immediate	100	B
	#17	Pn809	Absolute Position Setting	-99,999,999 to 99,999,999	Steps	Immediate	0	C
	#18	Pn80A	Origin Search Acceleration/Deceleration Time	1 to 10,000	ms	Power–up	100	B

Operation

The Origin Search Command performs origin search based on each origin search mode.

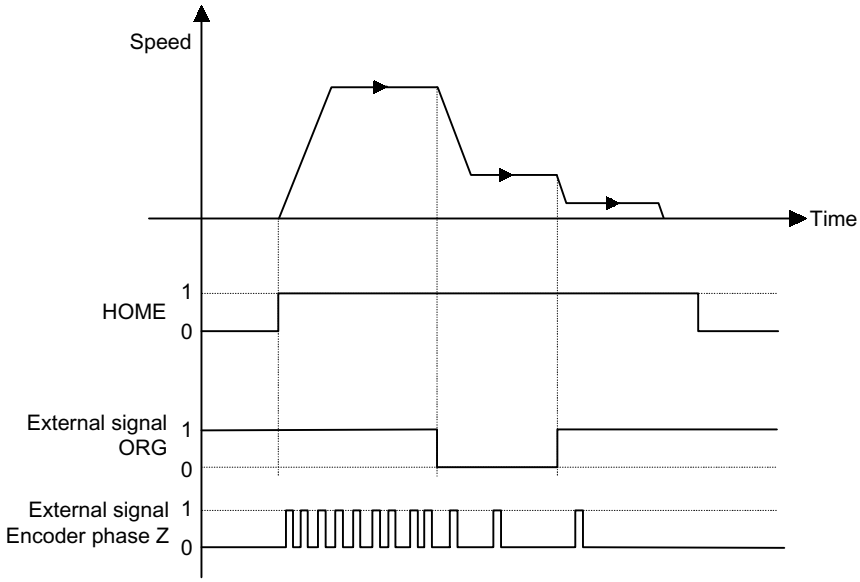

Command Method

Set the Servo ON Command (byte 0, bit 1) to 1.

Set the Origin Search Command (byte 2, bit 7) to 1.

Byte	Bit 7	Bit 6	Bit 5	Bit 4	Bit 3	Bit 2	Bit 1	Bit 0
0	0	0	0	1	0	0	1	0
1	Response type				0 Hex			
2	1	0	0	0	0	0	0	0
3	0	0	0	0	0	0	0	0
4	0							
5								
6								
7								

6

6.6.2 Operation

Move commands performed using the command codes are described below.

■ Direct Operation Command (Command Code: 0001, 1 Hex)

This section describes the Direct Operation Command function, related parameters, operation, and command method.

Function

The Direct Operation Command performs positioning to the specified target position.

Related Parameters

Object	Attribute	No.	Name	Setting Range	Unit	Effective Timing	Default Setting	Type
0x64	#51	Pn821	Speed	1 to 240,000	× 1000 steps/min	Immediate	24,000	B
	#52	Pn822	Acceleration Time	1 to 10,000	ms	Immediate	100	B
	#53	Pn823	Deceleration Time	1 to 10,000	ms	Immediate	100	C
	#54	Pn824	Switch Speed	1 to 240,000	× 1000 steps/min	Immediate	12,000	C
	#55	Pn825	Second Acceleration/ Deceleration Time	1 to 10,000	ms	Immediate	200	B
	#56	Pn826	Acceleration/Deceleration Type	0, 1, 2, 3	–	Immediate	0	B
	#58	Pn829	Filter Selection	0, 1, 2, 3	–	Immediate	0	B
	#70	Pn840	Time Constant for Exponential Curve	4 to 1,000	ms	Immediate	25	C
	#71	Pn841	Bias Speed	0 to 240,000	× 1000 steps/min	Immediate	0	C
	#72	Pn842	Time Constant of Moving Average	4 to 1,000	ms	Immediate	25	C
	#73	Pn843	Maximum Speed	1 to 240,000	× 1000 steps/min	Immediate	24,000	B

Operation

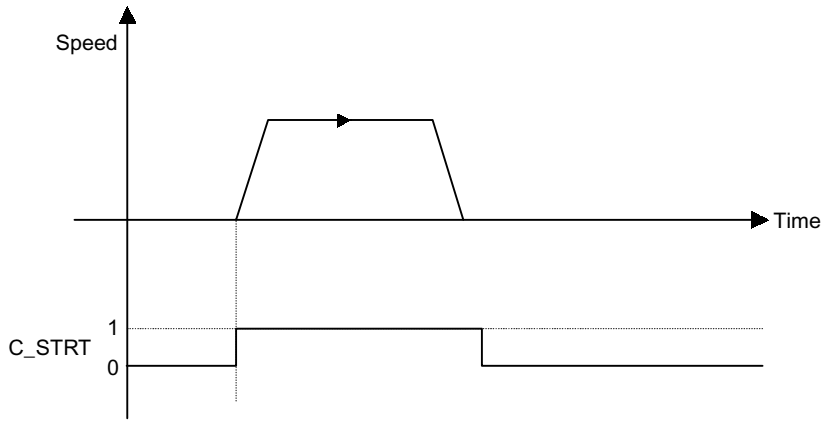

Command Method

1. Set the command code (byte 1, bits 0 to 3) to 0.
2. Set the Servo ON Command (byte 0, bit 1) to 1.
3. Set absolute/relative (byte 3, bit 0). If a relative position has been specified, the target position will be (present position) + (position specified from bytes 4 to 7).
4. Set the target position in the command data (bytes 4 to 7).
5. Set direct operation (=1) in the command code (byte 1, bits 0 to 3).
6. Change the Command Start Command (byte 0, bit 0) from 0 to 1.

Byte	Bit 7	Bit 6	Bit 5	Bit 4	Bit 3	Bit 2	Bit 1	Bit 0
0	0	0	0	1	0	0	1	1
1	Response type				1 Hex			
2	0	0	0	0	0	0	0	0
3	0	0	0	0	0	0	0	INC
4	Target position data							
5								
6								
7								

■ Interrupt Feeding Command (Command Code: 0010, 2 Hex)

This section describes the Interrupt Feeding function, related parameters, operation, and command method.

6

Function

The Interrupt Feeding Command performs interrupt feeding to the specified target position. If the status of the interrupt input signal changes during movement, the axis will decelerate to the interrupt feeding positioning speed from the position where the status changed and travel the distance specified in the parameter.

Related Parameters

The same acceleration/deceleration data is used as for the Positioning Command.

Object	Attribute	No.	Name	Setting Range	Unit	Effective Timing	Default Setting	Type
0x64	#57	Pn827	Interrupt Feeding Speed	1 to 240,000	× 1,000 steps/min	Immediate	24,000	B
	#94	Pn854	Interrupt Feeding Positioning Speed	1 to 240,000	× 1,000 steps/min	Immediate	24,000	B
	#95	Pn855	Interrupt Feeding Distance	±99,999,999	Steps	Immediate	0	B
	#96	Pn856	Interrupt Feeding Function Selection	0 to 1	–	Power-up	0	B

Operation

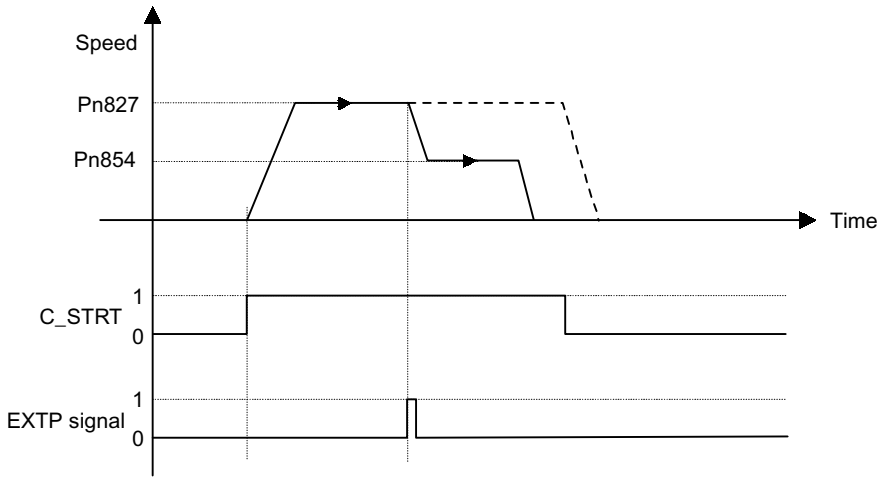

Command Method

1. Set the command code (byte 1, bits 0 to 3) to 0.
2. Set the Servo ON Command (byte 0, bit 1) to 1.
3. Set absolute/relative (byte 3, bit 0). If a relative position has been specified, the target position will be (present position) + (position specified from bytes 4 to 7).
4. Set the target position in the command data (bytes 4 to 7).
5. Set external positioning (=2) in the command code (byte 1, bits 0 to 3).
6. Change the Command Start Command (byte 0, bit 0) from 0 to 1.

Byte	Bit 7	Bit 6	Bit 5	Bit 4	Bit 3	Bit 2	Bit 1	Bit 0
0	0	0	0	1	0	0	1	1
1	Response type				2 Hex			
2	0	0	0	0	0	0	0	0
3	0	0	0	0	0	0	0	INC
4	Target position data							
5								
6								
7								

■ Notch Output Positioning Command (Command Code: 0011, 3 Hex)

This section describes the Notch Output Positioning Command function, related parameters, operation, and command method.

Function

The Notch Output Positioning Command performs positioning to the specified position.

If a specified position is passed during the positioning, a notch output signal will be output.

Two notch signals can be used in the DeviceNet Unit.

Related Parameters

Object	Attribute	No.	Name	Setting Range	Unit	Effective Timing	Default Setting	Type
0x64	#160	Pn890	Notch Signal Position Designation	0, 1	–	Immediate	0	C
	#161	Pn891	Notch Signal	0 to 3	–	Immediate	0	C
	#162	Pn892	Negative Direction Notch 1	± 99,999,999	Steps	Immediate	0	C
	#163	Pn893	Positive Direction Notch 1	± 99,999,999	Steps	Immediate	0	C
	#164	Pn894	Negative Direction Notch 2	± 99,999,999	Steps	Immediate	0	C
	#165	Pn895	Positive Direction Notch 2	± 99,999,999	Steps	Immediate	0	C

6

Operation

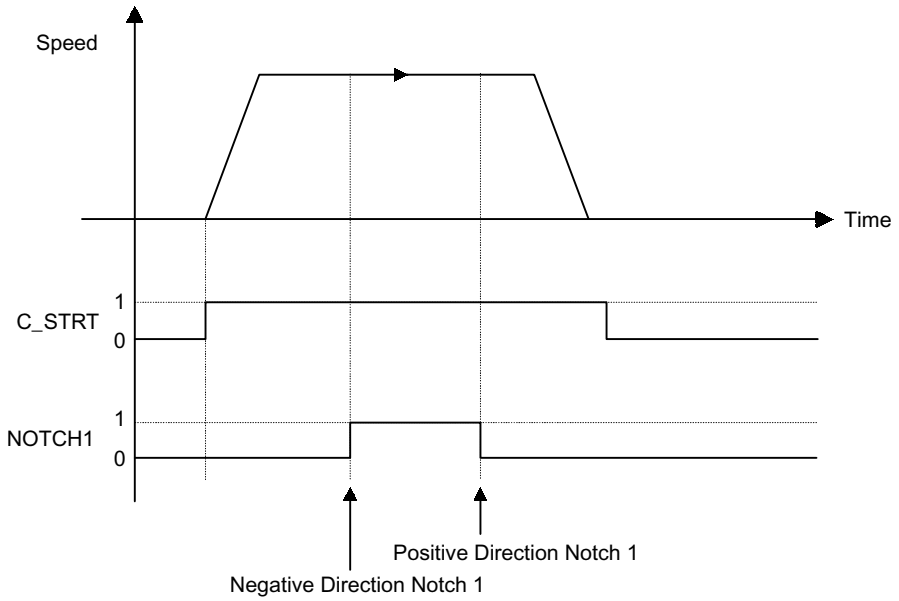

Command Method

1. Set the command code (byte 1, bits 0 to 3) to 0.
2. Set the Servo ON Command (byte 0, bit 1) to 1.
3. Set absolute/relative (byte 3, bit 0). If a relative position has been specified, the target position will be (present position) + (position specified from bytes 4 to 7).
4. Set the target position in the command data (bytes 4 to 7).
5. Set positioning with notch signal output (=3) in the command code (byte 1, bits 0 to 3).
6. Change the Command Start Command (byte 0, bit 0) from 0 to 1.

Byte	Bit 7	Bit 6	Bit 5	Bit 4	Bit 3	Bit 2	Bit 1	Bit 0
0	0	0	0	1	0	0	1	1
1	Response type				3 Hex			
2	0	0	0	0	0	0	0	0
3	0	0	0	0	0	0	0	INC
4	Target position data							
5								
6								
7								

■ Multi-speed Positioning Command (Command Code: 0100, 4 Hex)

This section describes the Multi-speed Positioning Command function, related parameters, operation, and command method.

Function

The Multi-speed Positioning Command changes the speed in stages and performs positioning to specified positions.

When the positions specified in the parameters are reached during axis travel, the axis switches to the next set speed and travels to the position specified in the next stage. Up to 16 speed switching positions can be set.

Related Parameters

Object	Attribute	No.	Name	Setting Range	Unit	Effective Timing	Default Setting	Type
0x64	#111	Pn861	Speed Switch Point	0 to 16	–	Immediate	0	C
	#112	Pn862	Multi-speed Positioning Initial Feed	1 to 240,000	× 1000 steps/min	Immediate	24,000	C
	#113	Pn863	Position 1 for Multi-speed	0 to 99, 999, 999	Steps	Immediate	0	C
	#114	Pn864	Position 2 for Multi-speed	0 to 99, 999, 999	Steps	Immediate	0	C
	#115	Pn865	Position 3 for Multi-speed	0 to 99, 999, 999	Steps	Immediate	0	C
	#116	Pn866	Position 4 for Multi-speed	0 to 99, 999, 999	Steps	Immediate	0	C
	#117	Pn867	Position 5 for Multi-speed	0 to 99, 999, 999	Steps	Immediate	0	C
	#118	Pn868	Position 6 for Multi-speed	0 to 99, 999, 999	Steps	Immediate	0	C
	#119	Pn869	Position 7 for Multi-speed	0 to 99, 999, 999	Steps	Immediate	0	C
	#120	Pn86A	Position 8 for Multi-speed	0 to 99, 999, 999	Steps	Immediate	0	C
	#121	Pn86B	Position 9 for Multi-speed	0 to 99, 999, 999	Steps	Immediate	0	C
	#122	Pn86C	Position 10 for Multi-speed	0 to 99, 999, 999	Steps	Immediate	0	C
	#123	Pn86D	Position 11 for Multi-speed	0 to 99, 999, 999	Steps	Immediate	0	C
	#124	Pn86E	Position 12 for Multi-speed	0 to 99, 999, 999	Steps	Immediate	0	C
	#125	Pn86F	Position 13 for Multi-speed	0 to 99, 999, 999	Steps	Immediate	0	C
	#126	Pn870	Position 14 for Multi-speed	0 to 99, 999, 999	Steps	Immediate	0	C
	#127	Pn871	Position 15 for Multi-speed	0 to 99, 999, 999	Steps	Immediate	0	C

(cont'd)

Object	Attribute	No.	Name	Setting Range	Unit	Effective Timing	Default Setting	Type
0x64	#128	Pn872	Position 16 for Multi-speed	0 to 99, 999, 999	Steps	Immediate	0	C
	#129	Pn873	Speed 1 for Multi-speed	1 to 240,000	× 1000 steps/min	Immediate	24,000	C
	#130	Pn874	Speed 2 for Multi-speed	1 to 240,000	× 1000 steps/min	Immediate	24,000	C
	#131	Pn875	Speed 3 for Multi-speed	1 to 240,000	× 1000 steps/min	Immediate	24,000	C
	#132	Pn876	Speed 4 for Multi-speed	1 to 240,000	× 1000 steps/min	Immediate	24,000	C
	#133	Pn877	Speed 5 for Multi-speed	1 to 240,000	× 1000 steps/min	Immediate	24,000	C
	#134	Pn878	Speed 6 for Multi-speed	1 to 240,000	× 1000 steps/min	Immediate	24,000	C
	#135	Pn879	Speed 7 for Multi-speed	1 to 240,000	× 1000 steps/min	Immediate	24,000	C
	#136	Pn87A	Speed 8 for Multi-speed	1 to 240,000	× 1000 steps/min	Immediate	24,000	C
	#137	Pn87B	Speed 9 for Multi-speed	1 to 240,000	× 1000 steps/min	Immediate	24,000	C
	#138	Pn87C	Speed 10 for Multi-speed	1 to 240,000	× 1000 steps/min	Immediate	24,000	C
	#139	Pn87D	Speed 11 for Multi-speed	1 to 240,000	× 1000 steps/min	Immediate	24,000	C
	#140	Pn87E	Speed 12 for Multi-speed	1 to 240,000	× 1000 steps/min	Immediate	24,000	C
	#141	Pn87F	Speed 13 for Multi-speed	1 to 240,000	× 1000 steps/min	Immediate	24,000	C
	#142	Pn880	Speed 14 for Multi-speed	1 to 240,000	× 1000 steps/min	Immediate	24,000	C
	#143	Pn881	Speed 15 for Multi-speed	1 to 240,000	× 1000 steps/min	Immediate	24,000	C
	#144	Pn882	Speed 16 for Multi-speed	1 to 240,000	× 1000 steps/min	Immediate	24,000	C

Operation

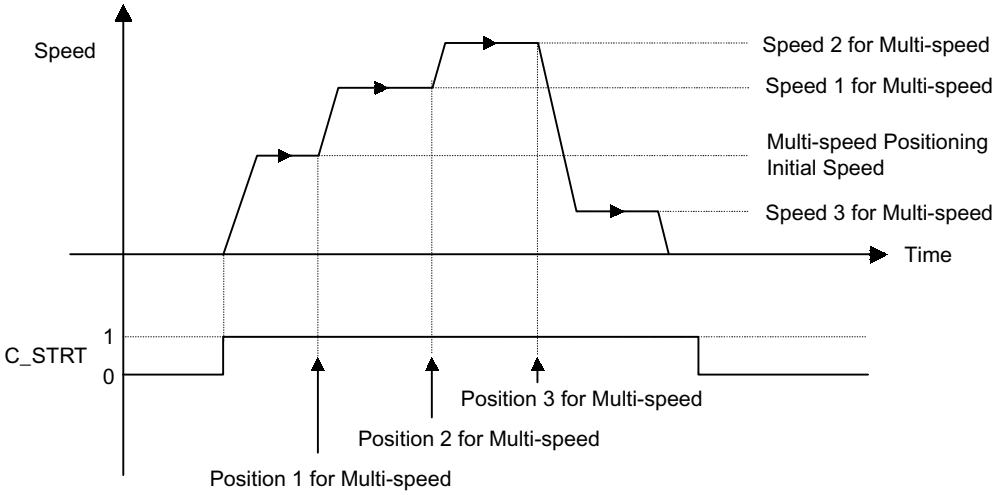

Command Method

1. Set the command code (byte 1, bits 0 to 3) to 0.
2. Set the Servo ON Command (byte 0, bit 1) to 1.
3. Set absolute/relative (byte 3, bit 0). If a relative position has been specified, the target position will be (present position) + (position specified from bytes 4 to 7).
4. Set the target position in the command data (bytes 4 to 7).
5. Set multi-speed positioning (= 4) in the command code (byte 1, bits 0 to 3).
6. Change the Command Start Command (byte 0, bit 0) from 0 to 1.

6

Note Do not change the positon or speed for multi-speed while the Multi-speed Positioning Command is being executed.

Byte	Bit 7	Bit 6	Bit 5	Bit 4	Bit 3	Bit 2	Bit 1	Bit 0
0	0	0	0	1	0	0	1	1
1	Response type				4 Hex			
2	0	0	0	0	0	0	0	0
3	0	0	0	0	0	0	0	INC
4	Target position data							
5								
6								
7								

6.7 Command Method Using the Remote I/O Communications

This section describes the basic operation of the DeviceNet Unit and command method using the Remote I/O communications.

6.7.1 Basic Operation

The basic operation of the DeviceNet Unit is shown below.

1. Once DeviceNet communications have started, check that the Unit is ready (i.e., that READY is 1).
2. Set the Emergency Stop Command (STOP) to 1 to clear emergency stop status.
3. Set the Servo ON Command (SVON) to 1 to turn ON the servo.
   Confirm that the servo of the W-series Servo Driver is ON by checking the status of SVON_R.
4. Set a command.
5. Confirm that the Progressing Flag (PRGS) has changed to 1.
6. Monitor the Progressing Flag (PRGS). When it changes to 0 again, the operation has been completed.
7. Set another command.

6.7.2 Command Method

For the following commands that involve movement, always wait until one command has been completed before executing another command. If commands are executed simultaneously or while the axis is travelling, a Command Warning (A.95) will occur.

- JOG Command
- Step Command
- Station Command
- Point Table Command
- Origin Search Command
- Move command based on a command code

The Emergency Stop, Servo ON, Cancel, and Hold Commands are effective any time.

■ Servo ON/OFF Command

When the Servo ON Command (SVON) is changed from 0 to 1, current is supplied to the Servomotor. When it is changed from 1 to 0, the current is not supplied.

If DeviceNet communications time out, the DeviceNet Unit automatically enters Servo OFF status. To restart communications, the Servo ON Command must be changed from 0 to 1.

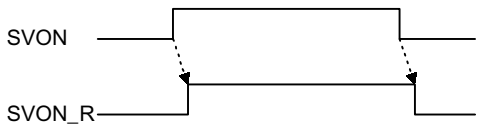

Fig. 6.1 Servo ON/OFF Signal

■ Emergency Stop Command

While the Emergency Stop Command (STOP) is set to 0, the W-series Servo Driver is in emergency stop status. During this status, the Emergency Stop Flag (STOP_R) is 0.

The emergency stop status can be released by setting the Emergency Stop Command (STOP) to 1 and changing the Servo ON Command (SVON) from 0 to 1.

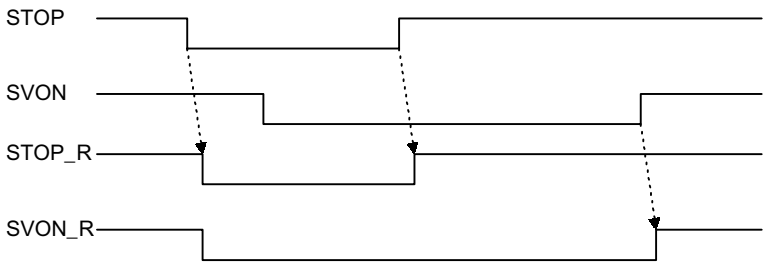

Fig. 6.2 Emergency Stop Command

■ Alarm Reset Command

When an alarm occurs, use the following procedure to restart the DeviceNet Unit.

1. Set the Servo ON Command (SVON) to 0 and set the Cancel Command (CANCEL) to 1.
2. Remove the cause of the alarm.
3. Clear any move commands that have been set.
4. Execute the Alarm Reset Command.
5. Check that the Alarm Flag (ALRM) is 0.

Alarm reset is executed by changing the Alarm Reset Command (ALRST) from 0 to 1. When execution of the alarm reset has been completed and all alarms have been cleared, the alarm bit (ALRM) will change to 0.

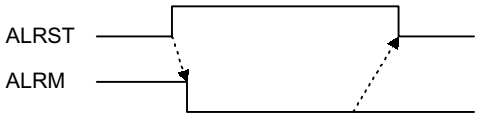

Fig. 6.3 Alarm Rest Command

■ JOG Command

While the JOG Command (JOG) is set to 1, the axis travels in the direction specified as the movement direction (DIR) at the feed speed.

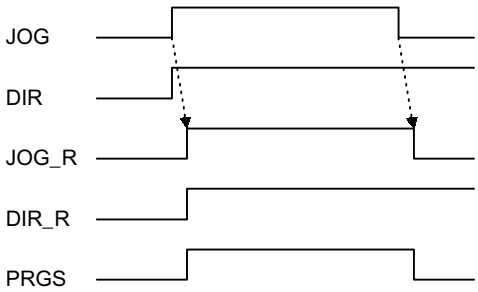

Fig. 6.4 JOG Command

■ Step Command

While the Step Command (STEP) is set to 1, the axis travels in the direction specified as the movement direction (DIR) at the feed speed for the step distance.

If the Step Command is set to 0 during the step operation, the step operation stops and the remaining travel distance is canceled.

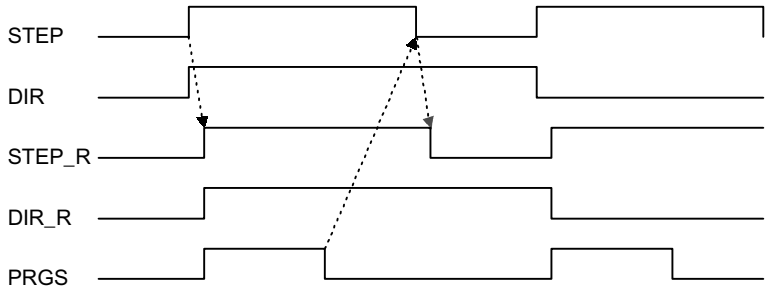

Fig. 6.5 Step Command

■ Station Command

The station operation starts when the Station Command (STN) is changed from 0 to 1. The following data must be set before the station operation is started.

- Movement direction: Specify the movement direction (byte 3, bit 1).
- Station number: Specify at the 1 word of bytes 4 and 5.
- Absolute/relative : Specify whether the station number is an absolute value or a relative value (byte 3, bit 0).

6

■ Point Table Command

The point table operation starts when the Point Table Command (PTBL) is changed from 0 to 1. The following data must be set before the point table operation is started.

- Point table number: Specified at the 1 word of bytes 4 and 5.

■ Origin Search Command

When the Origin Search Command (HOME) is changed from 0 to 1, the axis travels in the direction specified in the origin search direction in parameter Pn801 “Origin Search Function Selection.” If the Origin Search Command is changed from 1 to 0 during origin search, the origin search stops. Therefore, the Origin Search Command must be maintained to 1 until the origin search has been completed.

Using an Incremental Detection System

When the power is turned ON, the present position is 0 and the Origin Flag (HOME_P) is 0. When the origin search has been completed, the Origin Flag changes to 1.

Using an Absolute Value Detection System

When the Origin Search Command is changed from 0 to 1, the origin search is not performed but the axis is positioned to the machine coordinate origin based on the parameter Pn802 “Origin Search High Speed.”

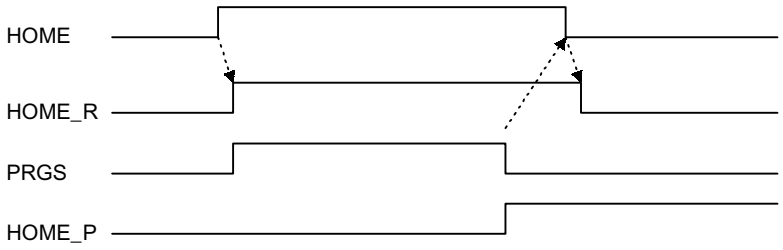

Fig. 6.6 Origin Search Command

■ Positioning Command

When the Command Start Command (C_STRT) is changed from 0 to 1, positioning starts according to the command code.

If the Hold Command (HOLD) is changed from 0 to 1 during execution of positioning, axis travel is held. Confirm that the Hold Command has been received by checking that the Holding Flag (HOLD_R) is set to 1. Change the Hold Command from 1 to 0 to restart the remaining axis travel.

If the Cancel Command (CANCEL) is changed from 0 to 1 during execution of the positioning, the moving axis decelerates to stop and the remaining travel distance is discarded. Confirm that the Cancel Command has been received by checking that the Progressing Flag (PRGS) has changed from 1 to 0.

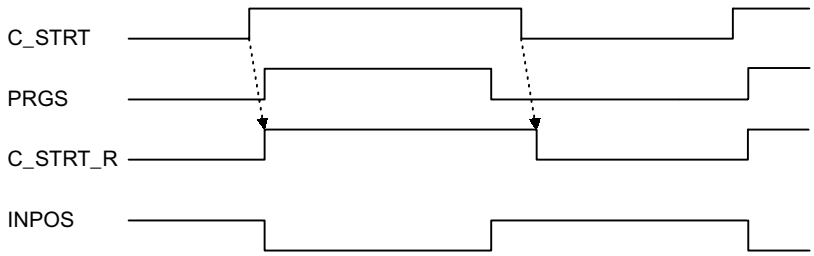

Fig. 6.7 Positioning Command

■ Unit Reset Command

The Unit is reset by setting the Unit Reset Command and changing the Command Start Command (C_STRT) from 0 to 1. When the Unit Reset Command is executed, the Unit Ready Flag (READY) is changed from 1 to 0. When the reset processing for the DeviceNet Unit and the W-series Servo Driver has been completed, the Unit Ready Flag changes from 0 to 1.

The Unit reset operation process is outlined below.

- If the axis is travelling, it decelerates to a stop and the remaining travel distance is discarded.
- If the present status is Servo ON, it changes to Servo OFF.
- If an alarm occurs, it is reset.
- All of the latest DeviceNet Unit parameters are stored in flash memory.

6.8 Communications Using Explicit Messages

This section explains Explicit Message communications frames, how to send Explicit Messages using the CMND instruction, and Explicit Message command and response blocks.

6.8.1 Explicit Messages Overview

Explicit Messages are sent and received as described below.

Explicit Message communications are basically executed in one-byte units (eight bits).

Communications frames for Explicit Messages are as follows:

Table 6.25 Explicit Message Communications Frames

Header	Node address	Service code	Class	Instance	Attribute	Data	Footer

Table 6.26 Explicit Message Communications Frames

Item	Explanation	
Header	Indicates the beginning of an Explicit Message, and whether the frame is an Explicit Message request or response. The header is automatically set by DeviceNet, so the user need not pay attention.	
Node address	Request: Specifies the node address of the slave or master being requested. Response: Specifies the node address of the master or slave sending the response.	
Service code	Request: Specifies the code for the service being requested (read, write, etc.). Response: The highest bit (bit 15) of the requested service code is changed to 1 and returned.	
Class	Function classification (major item)	Indicates the classification for each function specified by DeviceNet. When a function is specified, it is specified by these three codes.
Instance	Item classification (minor item)	
Attribute	Attribute (The set value for each function is allocated.)	
Data	Request: The data to be written. Response: The requested data to be read or an error message is attached.	
Footer	Indicates the end of the Explicit Message and the section of data for which a CRC check is to be executed. The footer is automatically set by DeviceNet, so the user need not pay attention.	

6.8.2 Command/Response Blocks

This section describes details of Explicit Message command/response blocks when the CS/CJ-series DeviceNet Master Unit is used.

■ Command Block

The Explicit Message command block is shown below.

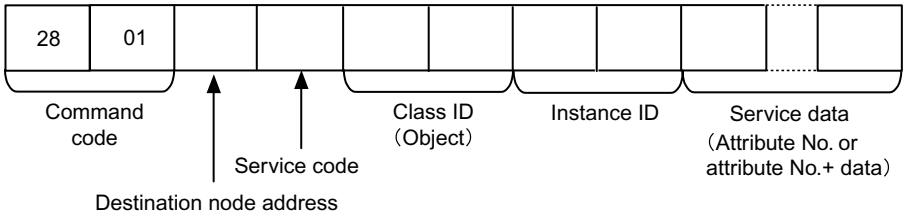

■ Response Block

The Explicit Message response block is shown below.

Normal Response

When a normal response is returned to the sent Explicit Message, the response block is shown below.

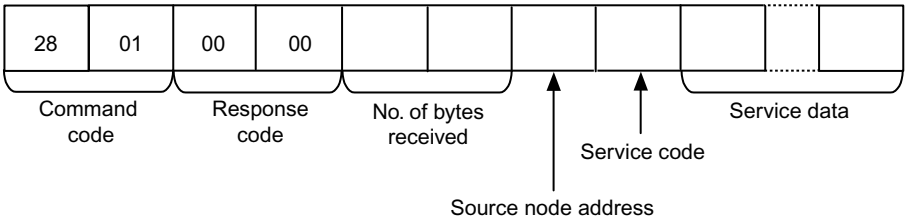

Error Responses

The following response is returned if an error occurs for the Explicit Message.

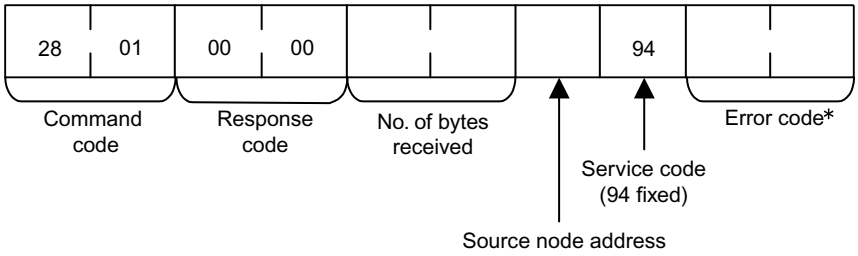

* For DeviceNet error codes, refer to *10.3.3 Error Codes for Message Communications.*

Failed Sending or Timeout

The following response is returned if the Explicit Message cannot be sent or times out.

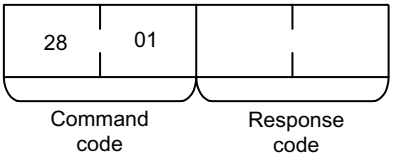

■ Details of Command/Response Blocks

This section describes details of command/response blocks used for the Explicit Message.

[Send Destination Node Address] (Command)

Specifies the node address of the Explicit Message destination.
The local node DeviceNet Master Unit is specified for CMND instruction control data for Explicit Message Send commands and the actual destination node is specified here.

[Service Code] (Command, Response)

For commands, the service code defined by the DeviceNet is specified.
For normal responses, the value for when bit 15 of the service code specified in the command turns ON is returned. For error responses, 94 hex, which indicates an error, is returned.

[Class ID] (Command)

Specifies the class ID for the Explicit Message destination.

[Instance ID] (Command)

Specifies the instance ID for the Explicit Message destination.

[Service Data] (Command, Response)

For commands, specifies the data defined by the service code.
For responses, returns the reception data defined by the service code.

[No. of Bytes Received] (Response)

Returns the number of bytes received after source node address.

[Source Node Address] (Response)

Returns the local node DeviceNet node address that was the source of the Explicit Message.

[Error Code] (Response)

Returns the error code defined by the DeviceNet.

Note 1. The Explicit Message Send command sends a DeviceNet-defined Explicit Message to an OMRON Special I/O Slave Unit or a Slave manufactured by another company and receives a response.

2. Unlike other FINS commands, the Explicit Message Send command specifies the local node DeviceNet Master Unit as the CMND instruction control code destination. The actual destination node is specified using the destination node address in the Explicit Message Send command.
Always specify the local node DeviceNet Master Unit in the CMND instruction control code. If another node Master Unit is specified, an error will occur.

3. If the DeviceNet Master Unit receives an Explicit Message, it will automatically return a response.

6.8.3 Sending Explicit Messages Using the CMND Instruction

This section explains how to use the CMND (command sending) instruction to send Explicit Messages, including the timing of message execution and responses.

■ CMND

With the CS/CJ-series DeviceNet Master Unit, CMND instructions can be used in the CPU Unit's ladder program to send Explicit Messages.

The Explicit Message command data is sent with FINS command code 2801 Hex attached at the beginning.

The Explicit Message response is received following the FINS command code 2801 Hex and FINS completion code.

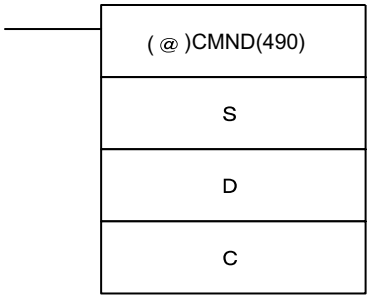

S: First Command Word at Local Node

Specify the beginning word for the command data to be transferred to the DeviceNet Master Unit. Preset in consecutive words the data to be transferred, as shown below.

Word	Bits	
	15 to 8	7 to 0
S	Command code (Set Explicit Message FINS command 2801.)	
S+1	Node address of slave or master to which message is to be sent: 0 to 3F Hex (0 to 63)	Explicit Message service code Write: 10; Read: 0E
S+2	Class ID code (Sets the DeviceNet class code for the function.)	
S+3	Instance ID code (Sets the DeviceNet instance code for the function.)	
S+4	Attribute ID code (Sets the DeviceNet attribute code for the function.)	Attached data (for write)
---	Attached data (for write)	

D: First Response Word at Local Node

Specify the beginning word of the area for storing responses to messages.

C: First Control Data Word

Specify the beginning word for storing the control data required for message communications. Preset in consecutive words the required data, as shown below. This data is required by the DeviceNet Master Unit.

Word	Bits		
	15	14 to 8	7 to 0
C	Number of command data bytes*1: 0000 to 021E Hex (0 to 542 bytes)		
C+1	Number of response data bytes*2: 0000 to 021E Hex (0 to 542 bytes)		
C+2	Destination network address: 0000 to 007F Hex (0 to 127), 0000 Hex (local network)		
C+3	Destination node address: 00 to 3F Hex (0 to 63)		Destination unit address: 10 to 1F Hex
C+4	Response*5	Communications port No.: 00 to 07	Number of retries*3: 00 to 0F Hex (0 to 15 times)
C+5	Response monitor time*4: 0000 Hex (2 s), 0001 to FFFF Hex (0.1 to 6,553.5 s (Unit: 0.1 s)		

* 1. Set the number of words from the beginning word S.
* 2. Set the number of words from the beginning word D.
* 3. Set the number of retries when there is an error response.
* 4. For Explicit Messages, this must be set to at least 2 s.
* 5. Set bit 15 of word C+4 to 0 (response returned) or 1 (response). For Explicit Messages, this bit must be set to 0 (response returned).

■ Message Timing

When executing CMND, an AND condition must be set for the ON status of the SYSMAC's Network Communications Enabled Flag (A20200 to A20207) and the Master Unit's Message Communications Enabled Flag [bit 12 of word (25 × unit number + 1542)].

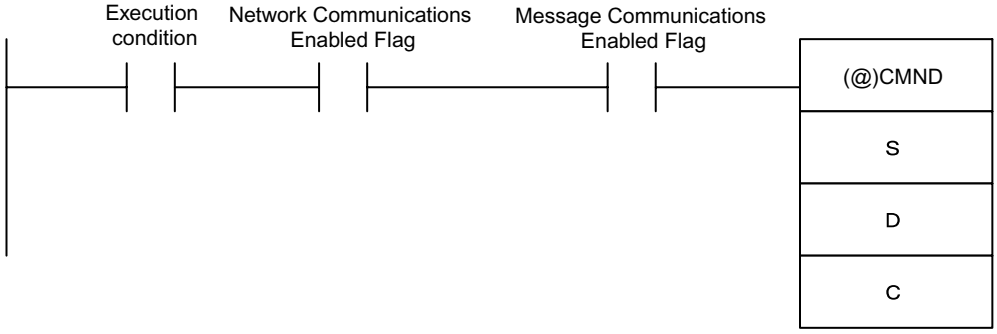

■ Message Response Read Timing

Execute response reading by the rising edge of the Network Communications Enabled Flag for each communications port.

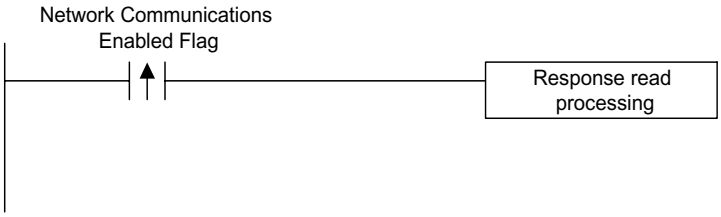

■ Communication-related Flags

The following table shows the communications-related flags.

Type	Name	Address		Contents
		Word	Bits	
SYSMAC flags	Network Communications Enabled Flag	A202	7 6 5 4 3 2 1 0 Port 7 Port 6 Port 5 Port 4 Port 3 Port 2 Port 1 Port 0	0: Execution disabled (Executing.) 1: Execution enabled (Not executing.)
	Network Communications Execution Error Flag	A219	7 6 5 4 3 2 1 0 Port 7 Port 6 Port 5 Port 4 Port 3 Port 2 Port 1 Port 0	0: Normal completion 1: Error
Master Unit status flags	Message Communications Enabled Flag	25 × unit number + 1524	12	0: Error is read and Master Unit message communications are disabled. 1: Master Unit message communications are enabled.

6

6.9 Tracing Data

The data trace function allows a host controller to read I/O information and operating data collected in the Servo Driver's memory via the DeviceNet.

By implementing trace settings, data is collected in the Servo Driver's memory. Then, by implementing trace data reading, the collected data can be read from a host controller by means of Explicit Messages.

The following table provides an outline of the data trace function.

Item	Contents
Trace targets	Data trace: 2 items max. I/O trace: 2 items max.
Trace data targets	Torque commands, speed feedback, command pulse rate, position deviation
I/O data trace targets	/ALM, INP1, VCMP, TGON, READY, CLIMT, VLIMT, BKIR, /WARN, INP2, ALO1, ALO2, ALO3
Number of trace points	1,000 points each
Sampling cycle	250 μs to 8,191,750 μs (Up to approximately 8 seconds can be set in units of 250 μs.)

Note 1. It takes approximately one minute from the beginning of the tracing until the end.

2. Trace parameters are not saved when the Unit is reset. When the power is turned OFF, the default values are restored.

3. The LED indicators on the front panel of the Servo Driver are not lit while tracing is being executed.

6

6.9.1 Trace Parameters

■ Trace Settings

The following table shows the parameters for the data trace function.

Object	Attribute	Access	Name	Data Type	Contents
0x67	#10	Get/Set	Data Trace1	UINT	Selection of target for data trace 1.
	#11	Get/Set	Data Trace2	UINT	Selection of target for data trace 2.
	#12	Get/Set	I/O Trace1	UINT	Selection of target for I/O trace 1.
	#13	Get/Set	I/O Trace2	UINT	Selection of target for I/O trace 2.
	#14	Get/Set	Sampling Cycle	DINT	Sampling cycle setting
	#15	Get/Set	Trigger Target	UINT	Trigger target setting
	#16	Get/Set	Trigger Level	UINT	Trigger level setting
	#17	Get/Set	Edge Type	UINT	Edge type setting
	#18	Get/Set	Pre-Trigger	UINT	Pre-trigger data setting
	#19	Get/Set	Start Trace	UINT	Data trace command
	#20	Get	Trace Status	UINT	Data trace status

■ Parameter Contents

The contents of the parameters for the data trace function are described in detail below.

Data Trace 1 (Object: 0x67; Instance: 0x01; Attribute: #10)

Set the target for Data Trace 1.

Set Value	Trace Target	Unit
0000 Hex	Torque command	%
0001 Hex	Feedback speed	r/min
0003 Hex	Command pulse rate	r/min
0004 Hex	Position deviation	Steps

Data Trace 2 (Object: 0x67; Instance: 0x01; Attribute: #11)

Set the target for Data Trace 2. The settings are the same as for Data Trace 1.

I/O Trace 1 (Object: 0x67; Instance: 0x01; Attribute: #12)

Set the target for I/O Trace 1.

Set Value	Trace Target	Contents
0080 Hex	/ALM	Alarm
0081 Hex	INP1	Positioning Completion 1
0082 Hex	VCMP	Speed Conformity
0083 Hex	TGON	Rotation Direction
0084 Hex	READY	Servo Ready
0085 Hex	CLIMT	Current Limit Detection
0086 Hex	VLIMT	Speed Limit Detection
0087 Hex	BKIR	Brake Interlock
0088 Hex	/WARN	Warning
0089 Hex	INP2	Positioning Completion 2
008B Hex	ALO1	Alarm Code Output 1
008C Hex	ALO2	Alarm Code Output 2
008D Hex	ALO3	Alarm Code Output 3

I/O Trace 2 (Object: 0x67; Instance: 0x01; Attribute: #13)

Set the target for I/O Trace 2. The settings are the same as for I/O Trace 1.

Sampling Cycle (Object: 0x67; Instance: 0x01; Attribute: #14)

Set the interval for executing the trace function. The setting is made in multiples of 250 µs, and the setting range is 250 µs to 8,191,750 µs.

Trigger Target (Object: 0x67; Instance: 0x01; Attribute: #15)

Set the target for activating the trigger. The objects that can be selected are the four targets set for Data Trace 1, Data Trace 2, I/O Trace 1, and I/O Trace 2, as well as “no trigger.” When “no trigger” is set, the trigger is activated when tracing begins, and the Trigger Level, Trigger Edge, and Pre-trigger Data Amount settings are disabled.

Set Value	Contents
0000 Hex	No trigger target
0001 Hex	Data set for Data Trace 1
0002 Hex	Data set for Data Trace 2
0003 Hex	I/O data set for I/O Trace 1
0004 Hex	I/O data set for I/O Trace 2

Trigger Level (Object: 0x67; Instance: 0x01; Attribute: #16)

Set the criteria for detecting the trigger. The unit for this setting is the same as for the Trigger Target. If the Trigger Target is set for I/O Trace 1, I/O Trace 2, or no trigger, the trigger level setting is disabled.

Edge Type (Object: 0x67; Instance: 0x01; Attribute: #17)

Set the direction of change when the trigger is considered valid. If the Trigger Target is set to no trigger, the Edge Type setting is disabled.

Set Value	Contents	Trace Target	Remarks
0000 Hex	Rising edge	Trace data	The trigger is detected when the data changes from less than the trigger level to the trigger level or higher.
		I/O trace	The trigger is detected when the signal changes from low to high.
0001 Hex	Falling edge	Trace data	The trigger is detected when the data changes from higher than the trigger level to the trigger level or lower.
		I/O trace	The trigger is detected when the signal changes from high to low.
0002 Hex	Changed edge	Trace data	The trigger is detected when the trigger target data changes across the trigger level.
		I/O trace	The trigger is detected when the signal level changes.

Pre-trigger (Object: 0x67; Instance: 0x01; Attribute: #18)

Set how much of the 1,000 points of pre-trigger data is to be stored before detecting the trigger.

The setting unit is the amount of data, and the setting range is 0 to 999. If the Trigger Target is set to no trigger, the pre-trigger setting is disabled.

Start Trace (Object: 0x67; Instance: 0x01; Attribute: #19)

Set "start trace" or "stop trace." To execute tracing continuously, reset "start trace."

Set Value	Contents
0000 Hex	No-operation (NOP)
0001 Hex	Start trace
0002 Hex	Stop trace

Trace Status (Object: 0x67; Instance: 0x01; Attribute: #20)

Contains the data trace status.

Set Value	Contents
0000 Hex	Initial status
0001 Hex	Tracing data.
0002 Hex	Trace completed.
0010 Hex	Tracing interrupted.
0011 Hex	Setting error

6.9.2 Reading Trace Data

■ Data Trace Object

Data traced by the Servo Driver is stored in Data Trace Object. There are four general data trace objects, as shown in the following table.

Data Type	Data Range	Stored Objects
Trace data 1	1 to 1,000	Object 0x68, instance #1
Trace data 2	1 to 1,000	Object 0x68, instance #2
I/O trace 1	1 to 63	Object 0x68, instance #3
I/O trace 2	1 to 63	Object 0x68, instance #4

Trace Data 1 and 2

Trace data is stored as shown in the following diagram.

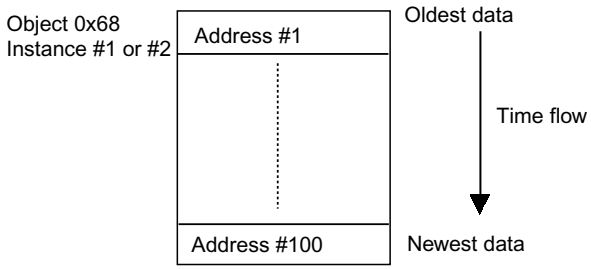

I/O Trace 1 and 2

I/O trace data is stored as shown below. The remainder of the 1,000 points of data (address #63, bits 8 to 15) is always stored as 0.

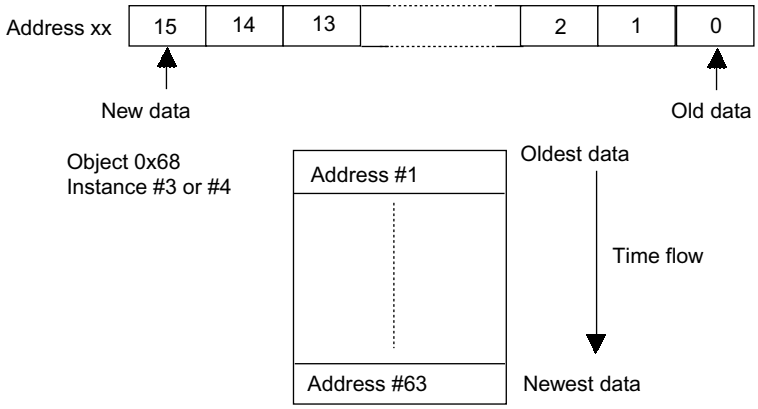

■ Explicit Messages

This section explains the Explicit Message blocks and transfer sequences used for trace data reading. Trace data reading uses both byte data reading and word data reading, as shown below.

Reading Byte Data

Command Block

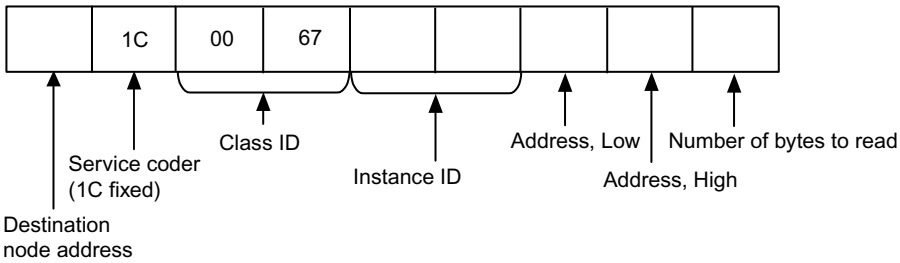

Response Block

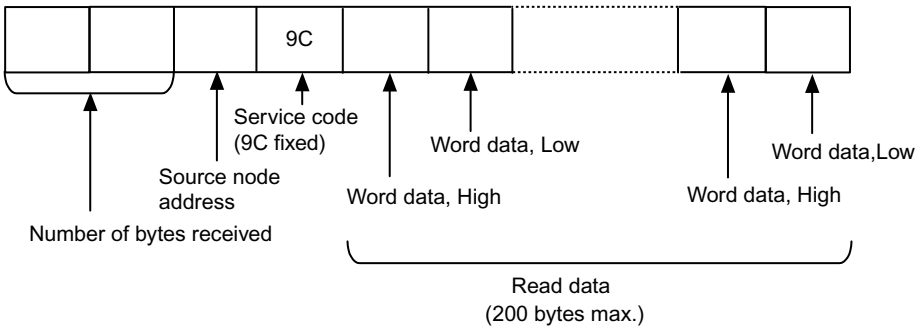

Note 1. The maximum number of bytes is 200.

2. If the settings for the beginning address and the number of bytes exceed the data capacity (data traces 1 and 2: 2,000 bytes; I/O traces 1 and 2: 126 bytes), the number of bytes of data to be read will be returned without generating an error.
Example: If the address is 1000 and the number of bytes is 10, only two bytes of data from address 1000 will be returned.

Error Response

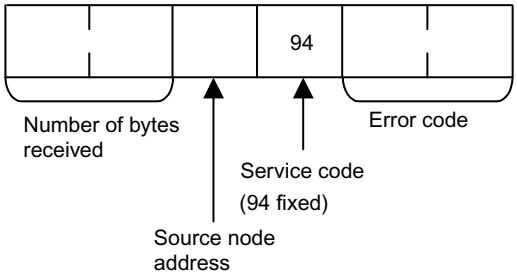

Reading Word Data

Command Block

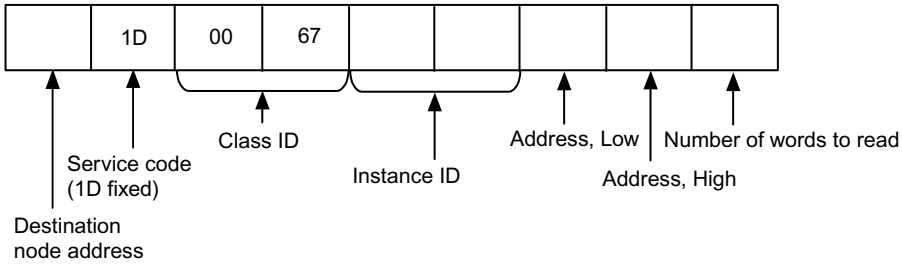

Response Block

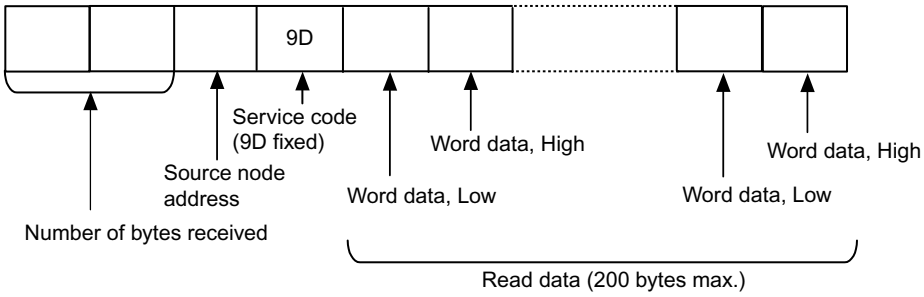

Note 1. The maximum number of words is 100.

2. If the settings for the beginning address and the number of words exceed the data capacity (data traces 1 and 2: 1,000 words; I/O traces 1 and 2: 63 words), the number of words of data to be read will be returned without generating an error.
Example: If the address is 1000 and the number of words is 10, only one word of data for address 1000 will be returned.

Error Response

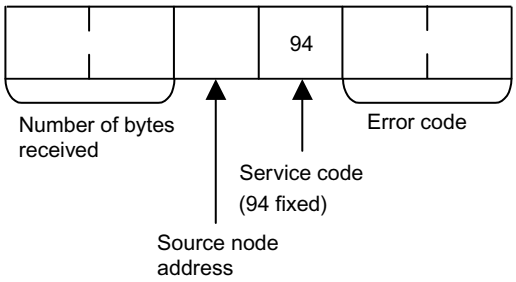

6.9.3 Tracing Data

Use the following procedures to execute a data trace from a host controller.

1. Set the trace.
2. Execute the trace.
3. Read the trace status.
4. Read the trace data.

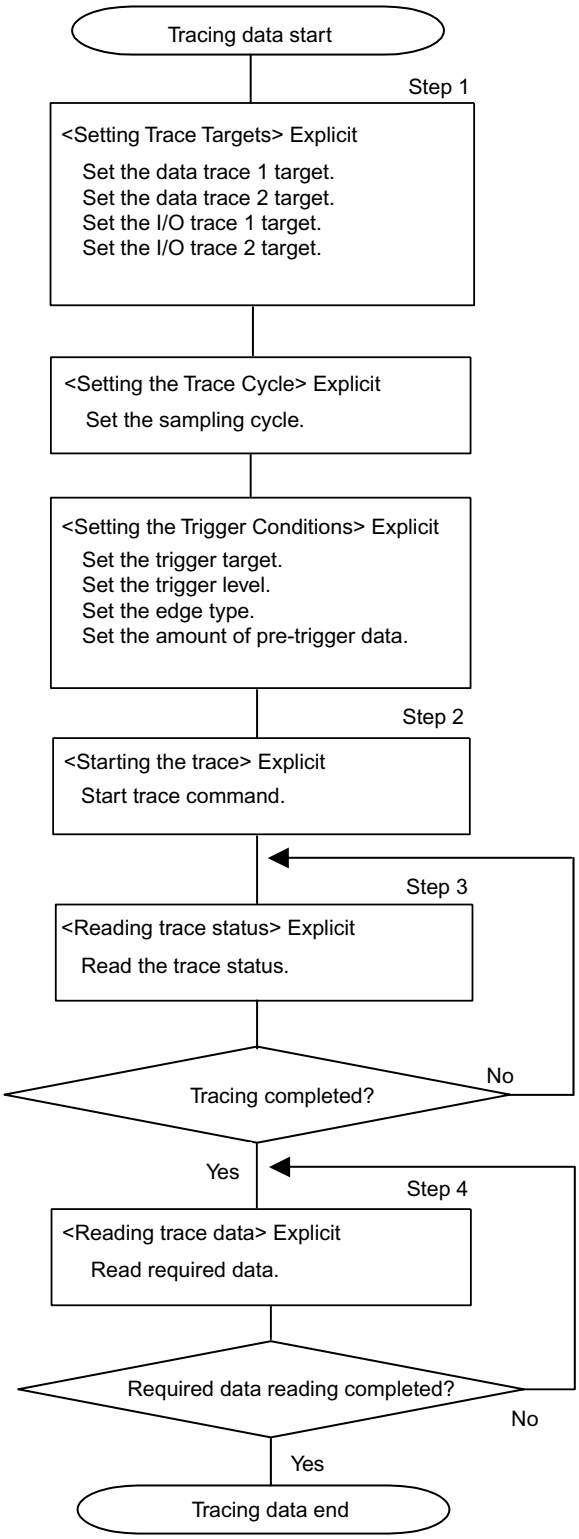

6.10 Changing Parameters

This section provides the DeviceNet conceptual diagram and how to change parameters.

6.10.1 Managing DeviceNet Data

In DeviceNet, all parameters and point tables are managed as objects, instances, and attributes.

Aconceptual diagram is given below.

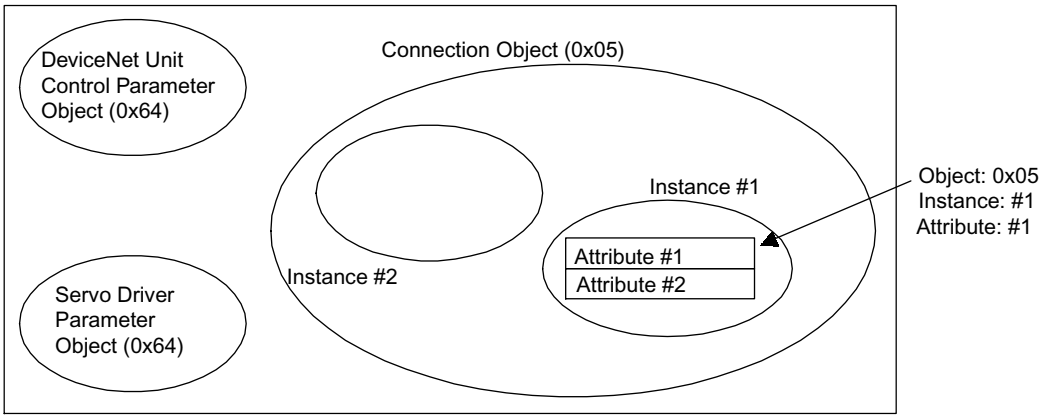

DeviceNet Units have the following ojbects.

6

Object Name	No. of Instances	Description
Identity Object	1	Manages device types and serial numbers.
Message Router Object	1	Acts as a router to distribute Explicit Messages to objects.
DeviceNet Object	1	Manages the physical connection to the DeviceNet.
Assembly Object	1	Manages responses.
	2	Mangages commands.
Connection Object	100	Manages Explicit Messages.
	101	Manages I/O messages.
Control Parameter Object	1	Manages detailed motion settings.
Point Table Object	1	Manages point table data.
Servo Driver Parameter Object	1	Manages Servo Driver paramters.
Trace Setting Object	1	Manages the settings of the data trace function.
Trace Data Object	1 to 4	Manages trace data.

Instances within objects hold data called attributes and show the status of the DeviceNet Unit. If referencing or changing attributes via DeviceNet, you must specify the object name, instance number, and attribute number.

For example, when referencing via DeviceNet the DeviceNet Unit parameter Pn802 (Origin Search High Speed), specify the attribute as follows:

- Control Parameter Object (0x64), Instance #1, Attribute #12

Refer to *10.2 DeviceNet Attributes* for a table of attributes.

6.10.2 Changing Parameters

This section explains how to change parameters using commands or message communications.

■ Changing Parameters Using Remote I/O Communications

W-series Servo Driver parameters, DeviceNet Unit parameters, and point table data can be changed using Remote I/O communications.

Refer to *6.5 Remote I/O Communications*.

■ Changing Parameters Using Message Communications

DeviceNet supports message communications, called Explicit Messages. Parameters can be referenced or changed using message communications. To use Explicit Messages, specify the objects, instance, and attributes explained in *6.10.1 Managing DeviceNet Data* and change the parameters. The basic block of Explicit Messages is shown below.

Command Block (Master Device to Slave Device)

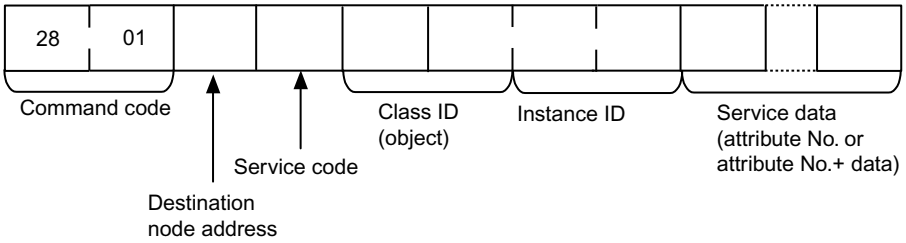

Response Block (Slave Device to Master Device)

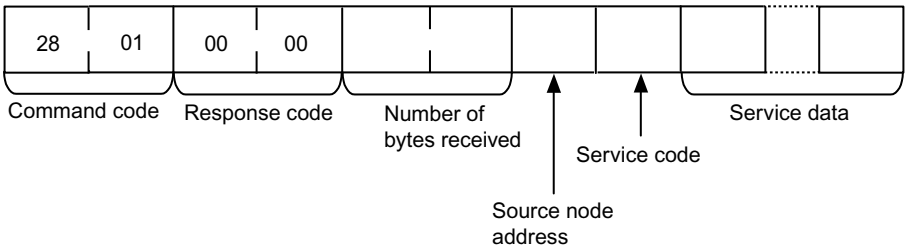

The following example shows the Origin Search High Speed (Object 0x64, instance #1, attribute #12) being read by using the Get_Attribute_Single command (code: 0x0e) when the master device node number is 0.

Command Block (Master Device to Slave Device)

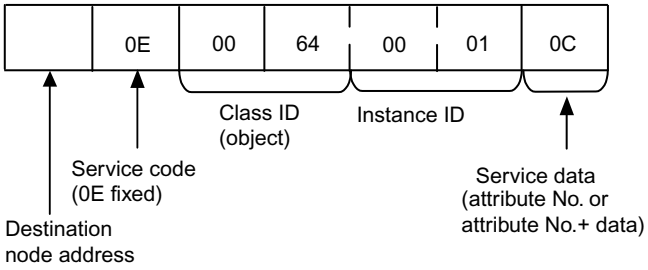

Response Block (Slave Device to Master Device)

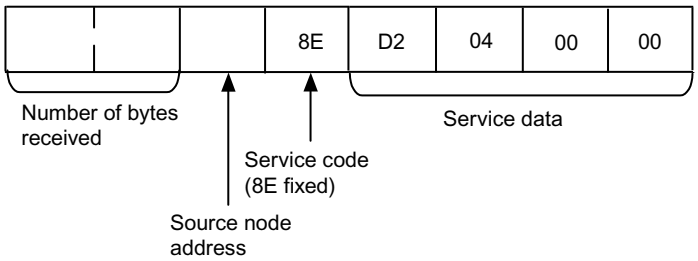

Note Origin Search Hith Speed will be 04D2 Hex.

6

Refer to the *DeviceNet Operation Manual* (W267-E1-□) for the master device for details on Explicit Messages.

7

Ladder Programming Examples

This chapter provides ladder programming examples for OMRON CS/CJ-series Programmable Controllers.

7.1 Programming Conditions - 7-2

7.2 Remote I/O Programming - 7-3

7.2.1 Servo ON Command - 7-3

7.2.2 Origin Search Command - 7-4

7.2.3 Direct Operation Command - 7-5

7.2.4 Parameter Read Command - 7-7

7.3 Programming Explicit Messages - 7-8

7.1 Programming Conditions

The programming conditions are as follows:

- DeviceNet Master Unit: Unit #0
  : Node address 63
- DeviceNet Unit: Node address 20
- Command: CIO 3220 to CIO 3223
- Response: CIO 3320 to CIO 3323

The default values are used for parameters.

The following ladder programming examples are for OMRON CS/CJ-series Programmable Controllers.

7.2 Remote I/O Programming

The following ladder programming examples use a variety of instructions.

7.2.1 Servo ON Command

The following is a programming example from the beginning of DeviceNet communications up until servo ON.

■ Operation

1. Clear the emergency stop when READY turns ON.
2. Turn ON the Servo ON Command.

■ Ladder Programming

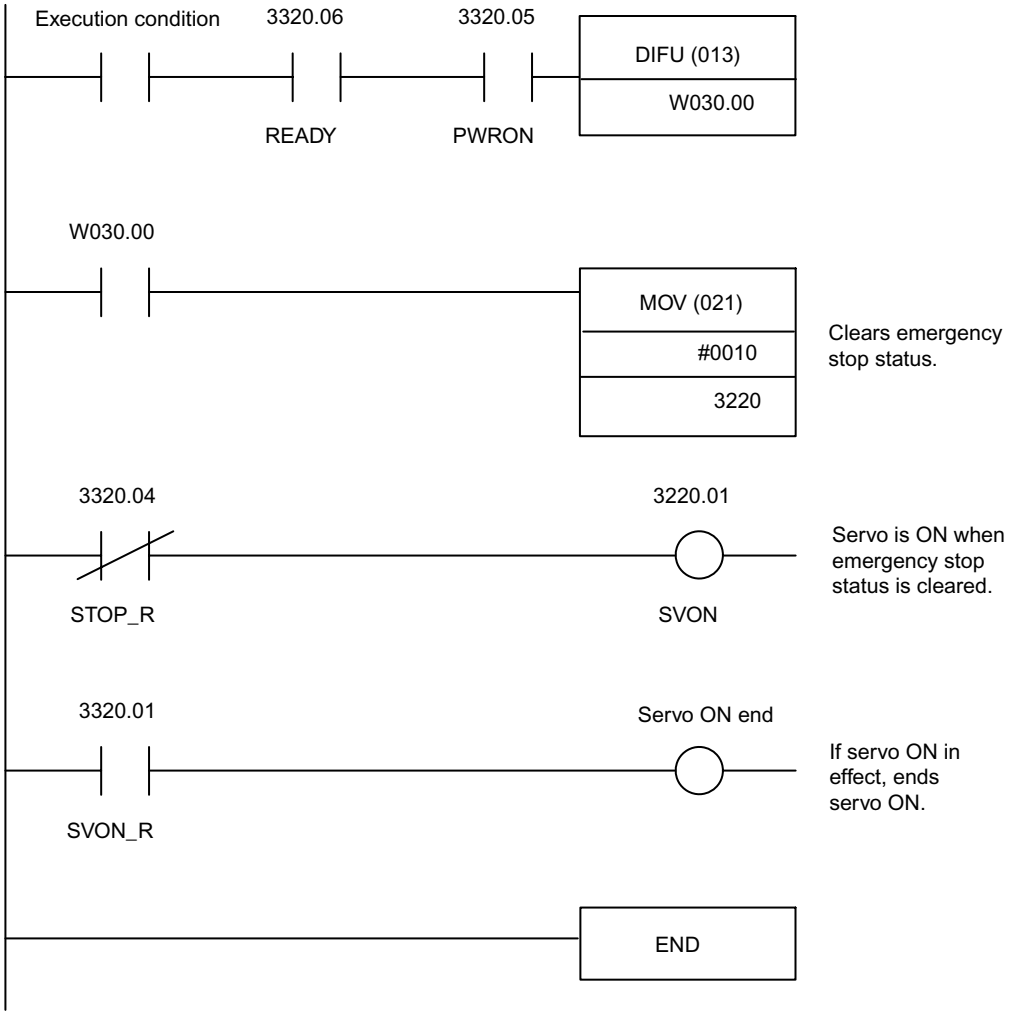

7.2.2 Origin Search Command

The following is a programming example for executing an origin search.

■ Condition

Servo ON is in effect.

■ Operation

1. Set the command code (no-operation) and response type (command position).
2. Turn ON the HOME (the Origin Search Command).

■ Ladder Programming

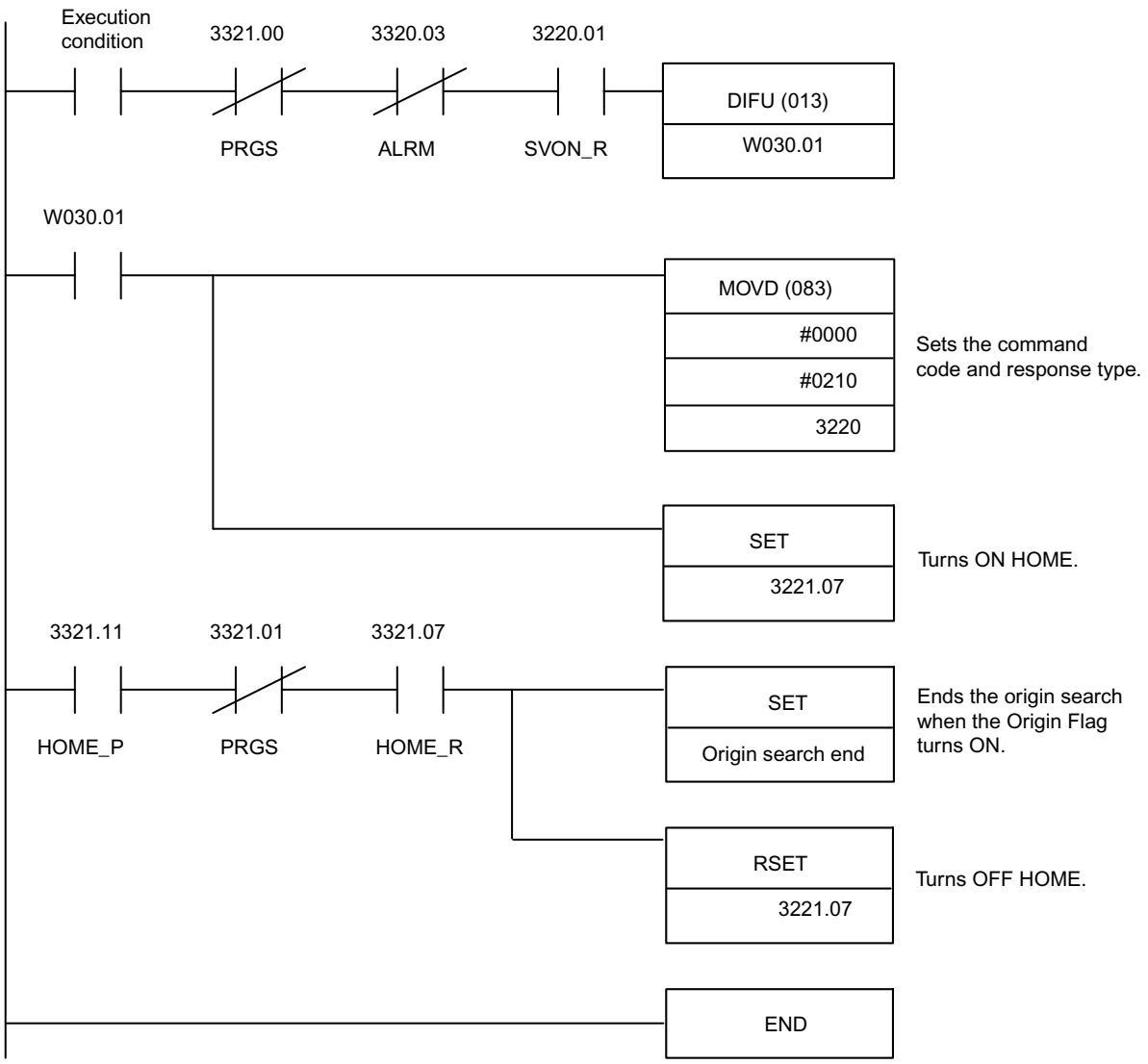

7

7.2.3 Direct Operation Command

The following is a programming example for executing direct operation.

■ Condition

Servo ON is in effect.

■ Operation

1. Set the command code (direct operation), response type (command position), and relative value.
2. Set the target position data to 1,000,000.
3. Turn ON C_STRT to start direct operation.

■ Ladder Programming

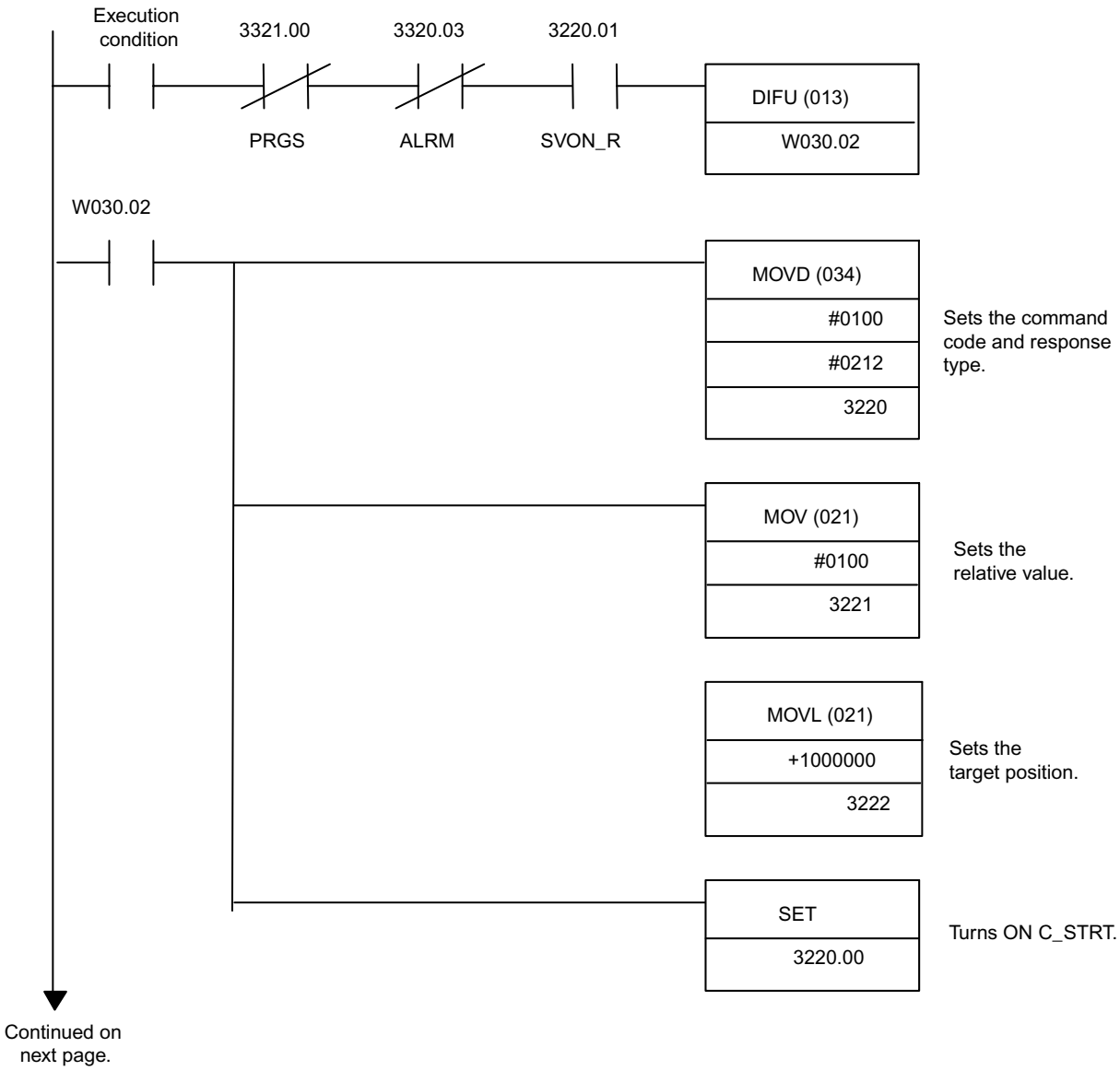

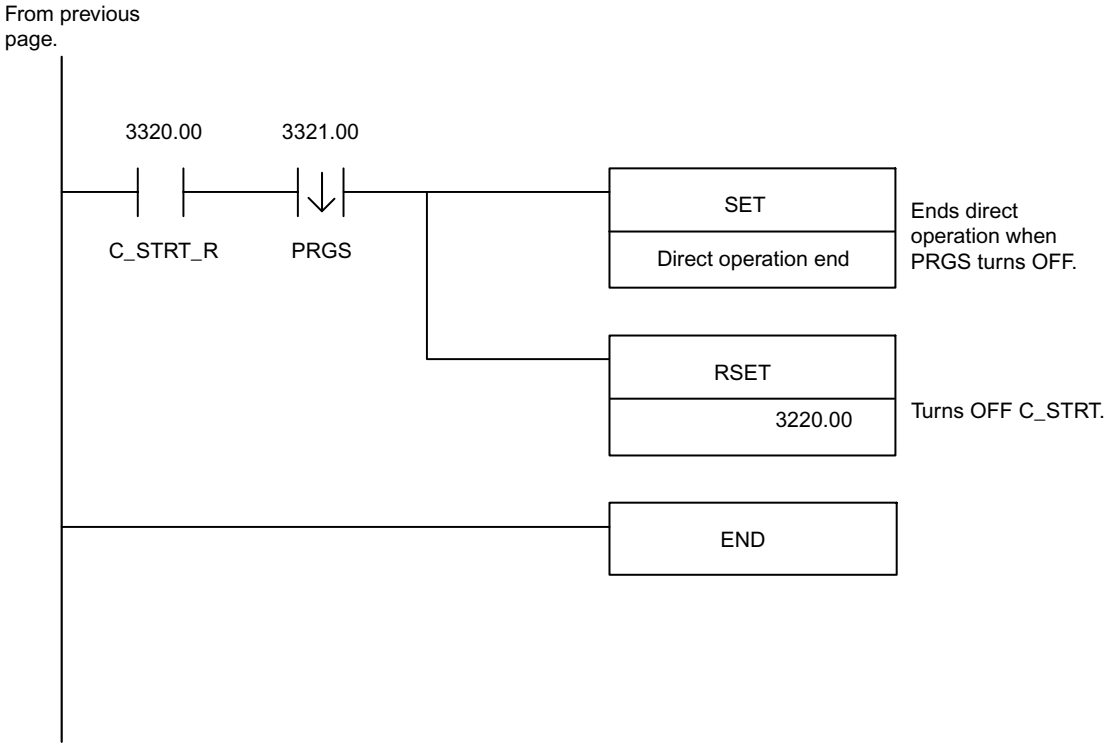
From previous page.
3320.00
3321.00
C_STRT_R
PRGS
SET
Direct operation end
Ends direct operation when PRGS turns OFF.
RSET
3220.00
Turns OFF C_STRT.
END

7.2.4 Parameter Read Command

The following is a programming example for reading parameters.

■ Condition

Reads parameter Pn843 (Maximum Speed).

■ Operation

1. Turn ON MOD and set the set/read command.
2. Set the command code (Parameter Read Command).
3. Set the parameter number to 843.
4. Turn ON C_STRT to read parameters.

■ Ladder Programming

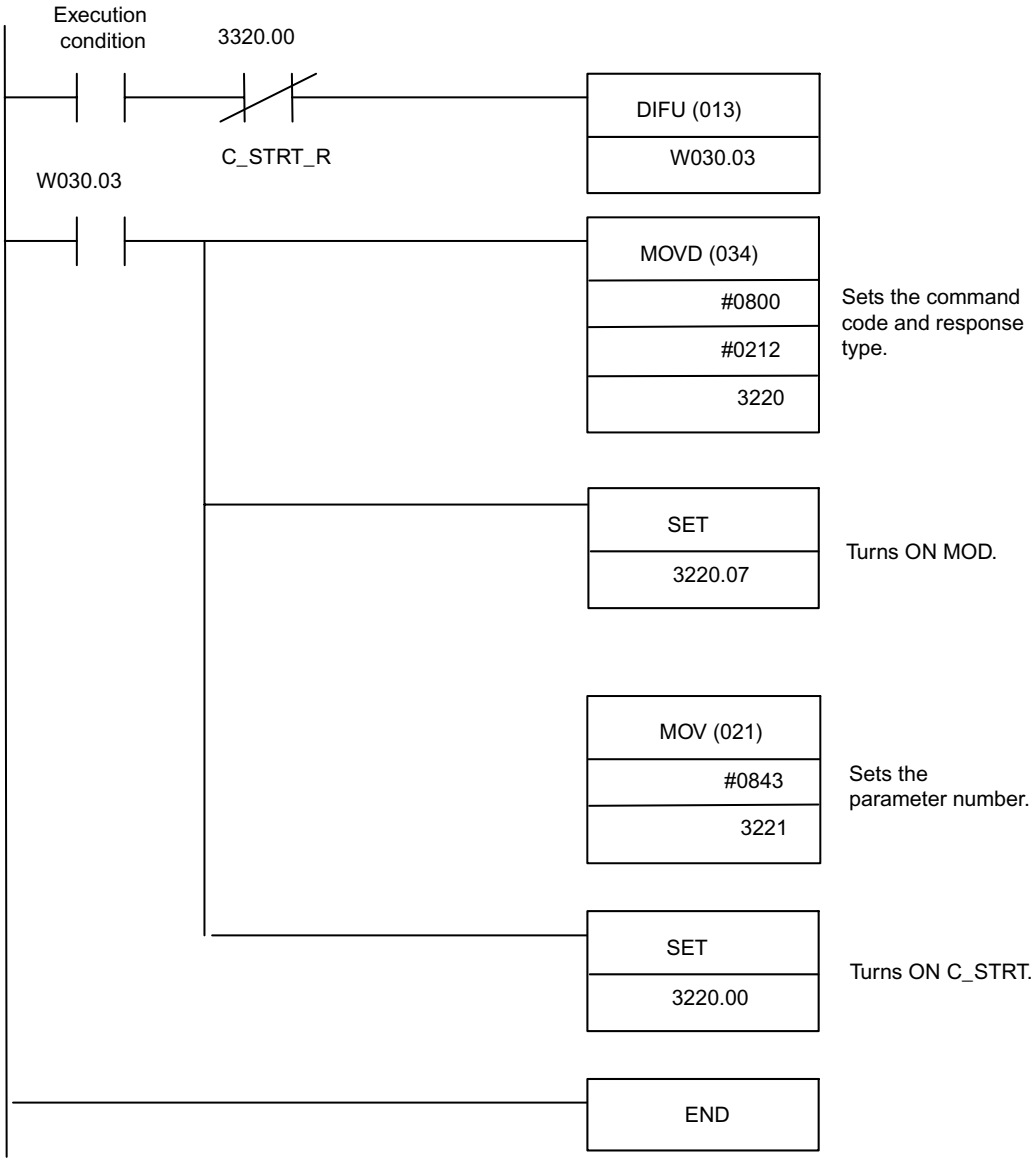

7.3 Programming Explicit Messages

The following is a programming example for using Explicit Messages to read parameters.

■ Conditions

- Reads parameter Pn843 (Maximum Speed).
- Uses CS/CJ-series DeviceNet Master Unit.
- Uses CMND to send Explicit Message.

■ Operation

1. Set the operands for CMND.
2. Execute CMND when the Network Communications Enabled Flag turns ON.
3. If a transmission error occurs, retry after response code is stored.

■ Ladder Programming

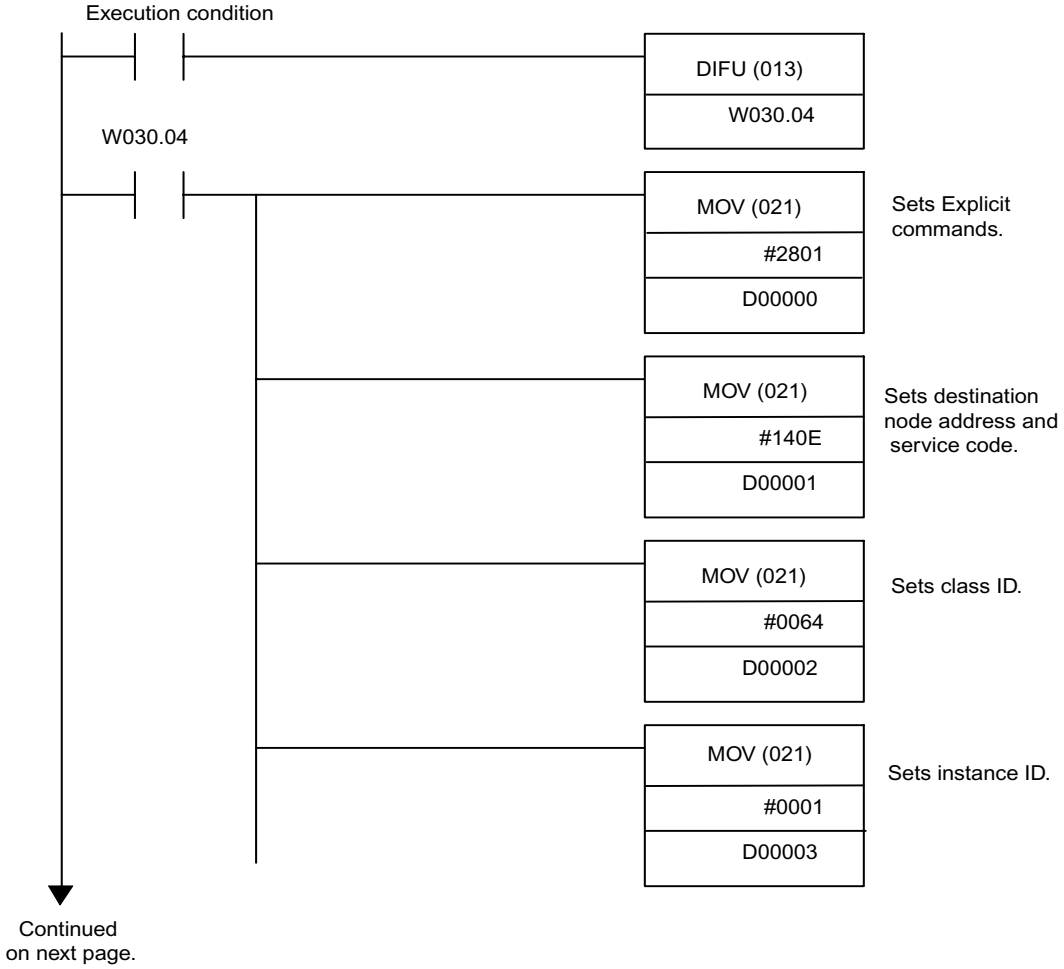

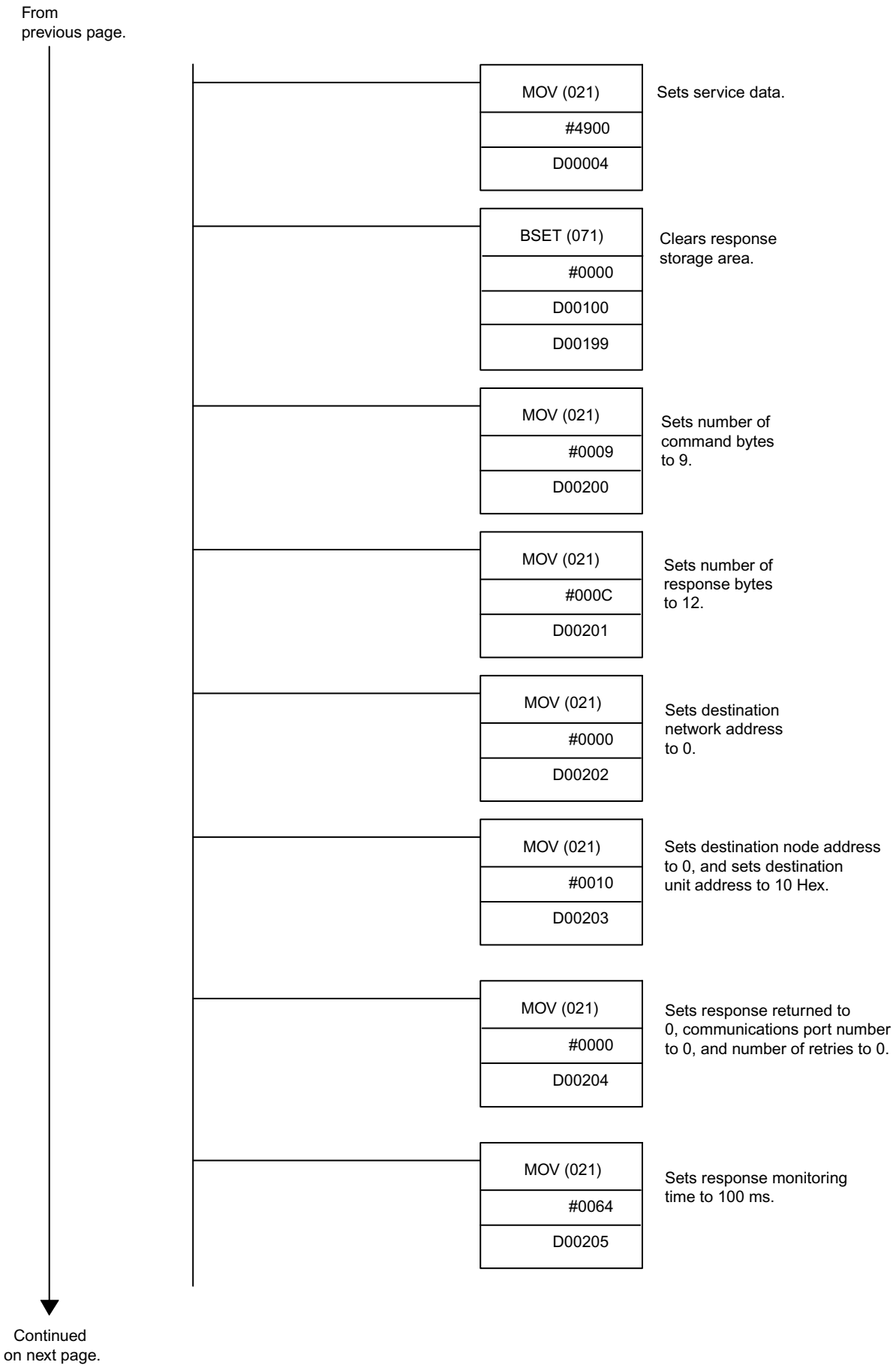
From
previous page.
MOV (021)
#4900
D00004
Sets service data.
BSET (071)
#0000
D00100
D00199
Clears response storage area.
MOV (021)
#0009
D00200
Sets number of command bytes to 9.
MOV (021)
#000C
D00201
Sets number of response bytes to 12.
MOV (021)
#0000
D00202
Sets destination network address to 0.
MOV (021)
#0010
D00203
Sets destination node address to 0, and sets destination unit address to 10 Hex.
MOV (021)
#0000
D00204
Sets response returned to 0, communications port number to 0, and number of retries to 0.
MOV (021)
#0064
D00205
Sets response monitoring time to 100 ms.
Continued
on next page.

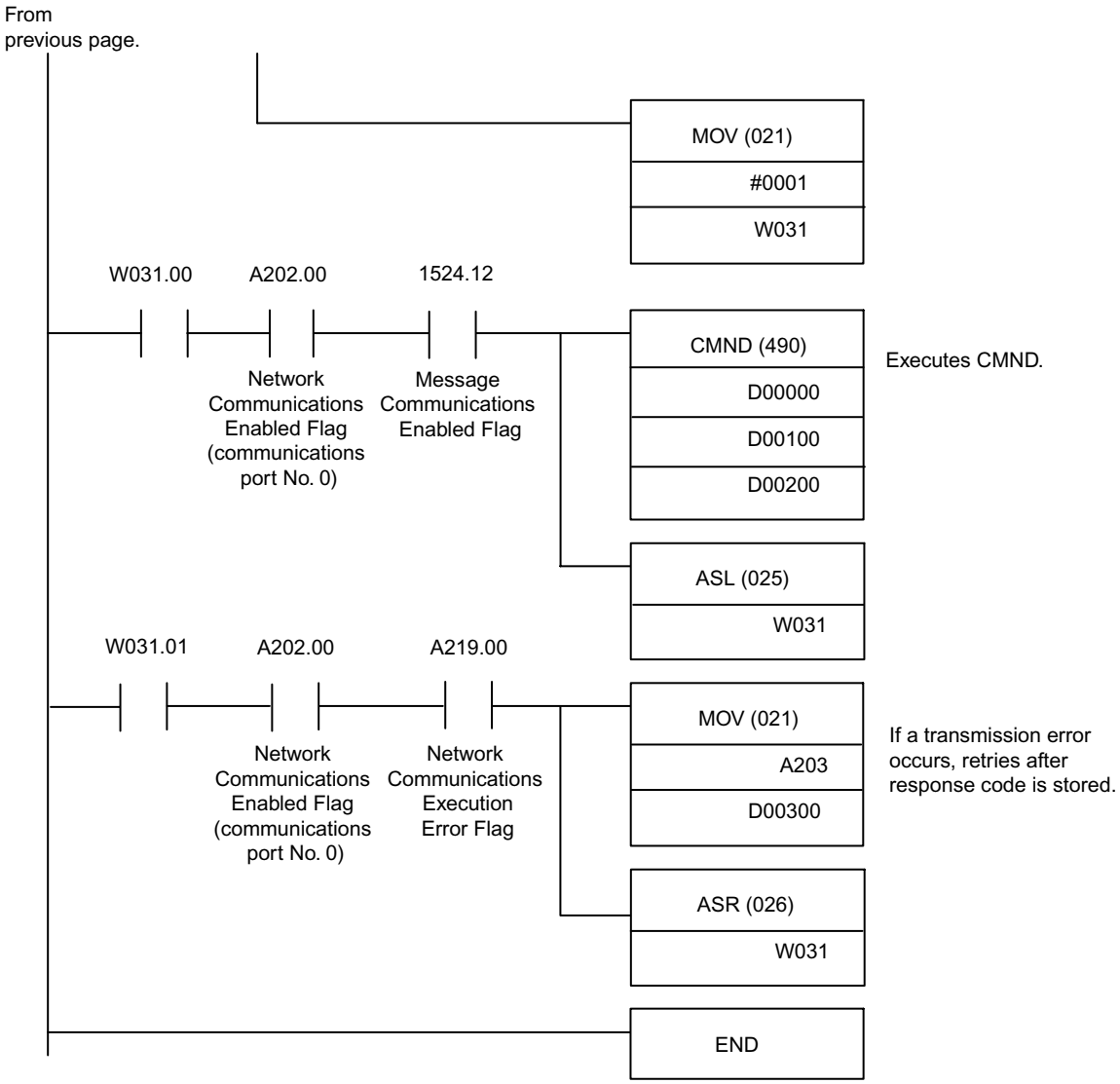
From
previous page.
MOV (021)
#0001
W031
W031.00
A202.00
1524.12
Network Communications Enabled Flag (communications port No. 0)
Message Communications Enabled Flag
CMND (490)
D00000
D00100
D00200
Executes CMND.
ASL (025)
W031
W031.01
A202.00
A219.00
Network Communications Enabled Flag (communications port No. 0)
Network Communications Execution Error Flag
MOV (021)
A203
D00300
If a transmission error occurs, retries after response code is stored.
ASR (026)
W031
END

8

Servo Driver Settings

This chapter describes various settings of the Servo Driver and settings of connected devices such as an absolute encoder or Parameter Unit when a DeviceNet Unit is mounted.

8.1 Setting Up the Servo Driver When the DeviceNet Unit is Mounted - 8-2

8.1.1 Parameters - 8-2

8.1.2 Automatically Set Parameters - 8-3

8.1.3 Standard Settings for I/O Signals - 8-4

8.1.4 Analog Monitors - 8-7

8.2 Settings According to Equipment Characteristics - - - - - - - - - 8-8

8.2.1 Switching Servomotor Rotation Direction - 8-8

8.2.2 Stop Mode Selection at Servo OFF - 8-9

8.2.3 Fully-closed Control - 8-10

8.3 Settings According to Host Controller - - - - - - - - - - - - - - - - - - 8-13

8.3.1 Sequence I/O Signals - 8-13

8.4 Setting Stop Functions - 8-15

8.4.1 Using the Dynamic Brake - 8-15

8.4.2 Using the Holding Brake - 8-16

8.5 Absolute Encoders - 8-20

8.5.1 Selecting an Absolute Encoder - 8-20

8.5.2 Absolute Encoder Setup (Initialization) - 8-21

8.5.3 Absolute Encoder Multi-turn Limit Setting - 8-21

8.6 Parameter Unit - 8-23

8.1 Setting Up the Servo Driver When the DeviceNet Unit is Mounted

This section describes the procedure for setting parameters to operate the Servo Driver.

8.1.1 Parameters

The W-Series Servo Driver provides many functions and has parameters that allow the user to specify functions and perform fine adjustments.

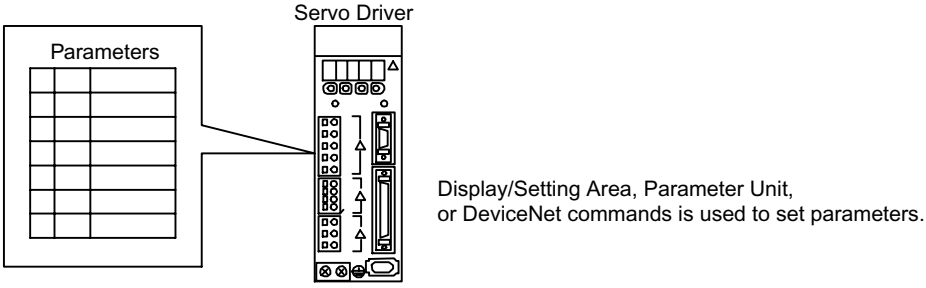

Parameters are divided into the following three groups.

Parameter	Function
Pn000 to Pn601	Specify Servo Driver functions, set servo gains, etc.
Fn000 to Fn013	Execute auxiliary functions such as JOG operations and origin searches.
Un000 to Un00D	Monitor the motor speed and torque command value on the panel display.

8.1.2 Automatically Set Parameters

When a DeviceNet Unit is mounted on a W-series Servo Driver and the Servo Driver is used for DeviceNet communications, the following parameters are automatically set. The following parameters will be treated as "reserved for system use," so do not change them. The W-series Servo Driver will be set for position control. It is not necessary to set parameters for speed and torque control, so do not change the settings.

Parameter No.	Digit	Parameter Name	Set Value	Description
Pn000	1	Control Mode Selection	1	Position control
Pn004	1	Not used	0	–
Pn200	2	Deviation Counter Reset	1	Deviation counter is not cleared.
Pn202	–	Electronic Gear Ratio G1 (Numerator)	1	Electronic gear on W-series Servo Driver is not used.
Pn203	–	Electronic Gear Ratio G2 (Denominator)	1	Electronic gear on W-series Servo Driver is not used.
Pn204	–	Position Command Filter Time Constant 1	0	Time constant = 0
Pn207	0	Selects Position Command Filter	0	Uses the position command acceleration/deceleration filter.
Pn50A	–	Input Signal Selection 1	8881	Not used
Pn50B	–	Input Signal Selection 2	□□81	Not used
Pn50C	–	Input Signal Selection 3	8888	Not used
Pn50D	–	Input Signal Selection 4	8888	Not used
Pn511	0	Not used	8	Not used

Note These parameters are set automatically the first time the power to the Servo Driver is turned ON after the DeviceNet Unit has been mounted. Startup will take approximately 6 seconds when these parameters are being set.

8.1.3 Standard Settings for I/O Signals

The standard setting for CN1 I/O signals when the DeviceNet Unit is mounted are described below. To use the standard settings, change the parameters to the standard setting as shown below. The input signal setting from the DeviceNet Unit will be force-changed, so the user cannot change this setting.

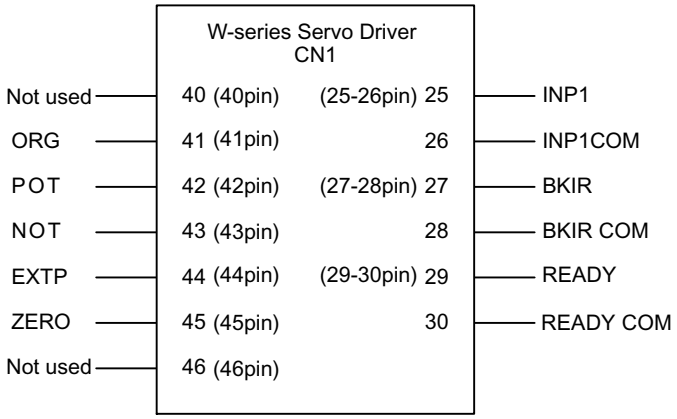

Fig. 8.1 Standard CN1 I/O Signal Settings

Table 8.1 Default Setting and Standard Settings for I/O Signals

Parameter No.	Parameter Name	Default Setting	Standard Setting
Pn50E	Output Signal Selection 1	3211	3001
Pn50F	Output Signal Selection 2	0000	0200
Pn510	Output Signal Selection 3	0000	0000

■ Input Circuit Signal Allocation

The allocation of the sequence input signal circuit when the DeviceNet Unit is mounted on the W-series Servo Driver is not changed. It will be as follows:

Terminal Numbers	Input Terminal Name	Symbol	Name
40	40pin	–	–
41	41pin	ORG	Origin proximity input signal
42	42pin	POT	Forward rotation drive prohibited
43	43pin	NOT	Reverse rotation drive prohibited
44	44pin	EXTP	Interrupt input signal
45	45pin	ZERO	Origin input signal
46	46pin	–	–

■ Output Circuit Signal Allocations

Output signal functions can be allocated to the sequence signal output circuits shown below.

In general, allocate signals according to the standard settings in the following table.

CN1 Connector Terminal Numbers	Output Terminal Name	Default Setting		Standard Setting	
		Symbol	Name	Symbol	Name
25	25-26pin	INP1	Positioning completion 1	INP1	Positioning completion 1
26		INP1COM		INP1COM	
27	27-28pin	TGON	Rotation detection	BKIR	Brake interlock
28		TGONCOM		BKIRCOM	
29	29-30pin	READY	Servo ready	READY	Servo ready
30		READYCOM		READYCOM	

The following table shows the output signal selection parameters and their default settings and standard settings.

Pn50E	Output Signal Selection 1	Default Setting: 3211	Standard Setting: 3001
Pn50F	Output Signal Selection 2	Default Setting: 0000	Standard Setting: 0200
Pn510	Output Signal Selection 3	Default Setting: 0000	Standard Setting: 0000

Select the CN1 connector terminals that will output the signals.

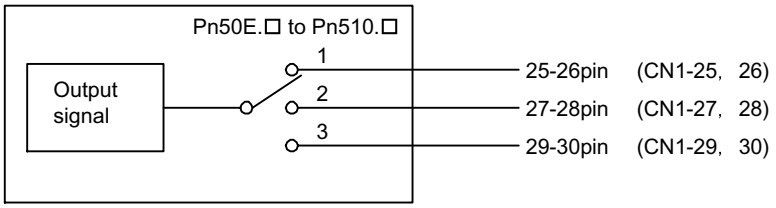

8

Output Signal	Parameter		Description
	Number	Setting	
Positioning Completion 1 (INP1)	Pn50E.0	0	Disabled (Not used for the output signal on the left.)
		1	Outputs the signal on the left from the 25-26pin (CN1–25 and 26) output terminal.
		2	Outputs the signal on the left from the 27-28pin (CN1–27 and 28) output terminal.
		3	Outputs the signal on the left from the 29-30pin (CN1–29 and 30) output terminal.
Speed Conformity (VCMP)	Pn50E.1	0 to 3	Same as Pn50E.0*
Rotation Detection (TGON)	Pn50E.2	0 to 3	Same as Pn50E.0*
Servo Ready (READY)	Pn50E.3	0 to 3	Same as Pn50E.0*
Current Limit Detection (CLIMT)	Pn50F.0	0 to 3	Same as Pn50E.0*
Speed Limit Detection (VLIMT)	Pn50F.1	0 to 3	Same as Pn50E.0*
Brake Interlock (BKIR)	Pn50F.2	0 to 3	Same as Pn50E.0*
Warning (/WARN)	Pn50F.3	0 to 3	Same as Pn50E.0*
Positioning Completion 2 (INP2)	Pn510.0	0 to 3	Same as Pn50E.0*

* "Same as Pn50E.0" means output signals are disabled or allocated to output terminals 25-26pin to 29-30pin through parameter settings 0 to 3.

Note Signals are output with OR logic when multiple signals are allocated to the same output circuit. Signals that are not detected are invalid.

Output Signal Reversal

The following parameter can be used to reverse the signals output on output terminals 25-26pin to 29-30pin.

Pn512	Output Signal Reverse	Default Setting: 0000	Output signal not reversed.

The settings specify which of the connector CN1 output signals are to be reversed.

Output Terminals	Parameter		Description
	Number	Setting	
25-26pin (CN1–25, 26)	Pn512.0	0	Output signal not reversed.
		1	Output signal reversed.
27-28pin (CN1–27, 28)	Pn512.1	0	Output signal not reversed.
		1	Output signal reversed.
29-30pin (CN1–29, 30)	Pn512.2	0	Output signal not reversed.
		1	Output signal reversed.
Reserved	Pn512.3	–	–

8.1.4 Analog Monitors

The analog monitors can be changed by changing the PN003.0 and Pn003.1 parameter settings.

Pn003.0	Analog Monitor 1 (AM) Allocation	Default Setting: 2	Torque Control
Pn003.1	Analog Monitor 2 (AM) Allocation	Default Setting: 0	Servomotor speed

The monitor signals and units and the observation gains when observing using the analog monitor (CN5) are shown on the following table.

Pn003.0 and Pn003.1 Settings	Monitor Signal	Analog Monitor (CN5) Observed Gain
0	Servomotor speed	1 V/1000 r/min
1	Speed command	1 V/1000 r/min
2	Torque command	1 V/100 % rated torque
3	Position deviation	0.05 V/1 command unit
4	Position deviation	0.05 V/100 command units
5	Command pulse frequency (Servomotor speed conversion)	1 V/1000 r/min
6	Servomotor speed	1 V/250 r/min
7	Servomotor speed	1 V/125 r/min
8 to F	Reserved monitor signal	–

Note Refer to *4.10 Using Monitor Output* in the *OMNUC W-series Servomotors/Servo Drivers User's Manual* (I531-E1-□) for information on monitoring methods of analog monitors.

8.2 Settings According to Equipment Characteristics

This section describes the procedure for setting parameters according to the dimensions and performance of the equipment used.

8.2.1 Switching Servomotor Rotation Direction

The Servo Driver has a Reverse Rotation Mode that reverses the direction of Servomotor rotation without rewiring. Forward rotation in the standard setting is defined as counterclockwise as viewed from the motor output shaft.

With the Reverse Rotation Mode, the direction of Servomotor rotation can be reversed without changing other items. The direction (+, -) of shaft motion is reversed. There are no other changes.

	Standard Setting	Reverse Rotation Mode
Forward Command	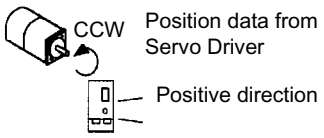	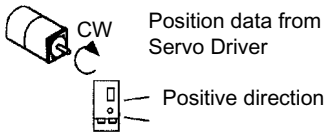
Reverse Command	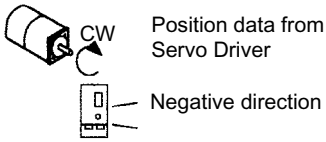	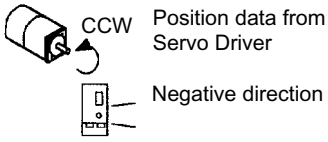

■ Setting Reverse Rotation Mode

Use parameter Pn000.0.

Pn000.0	Reverse Rotation	Default Setting: 0	CCW rotation by positive command

Use the following settings to select the direction of Servomotor rotation.

Setting	Description	
0	Forward rotation is defined as counterclockwise (CCW) rotation as viewed from the motor output shaft.	(Standard setting)
1	Forward rotation is defined as clockwise (CW) rotation as viewed from the motor output shaft.	(Reverse Rotation Mode)

8.2.2 Stop Mode Selection at Servo OFF

The W-series Servo Driver turns OFF under the following conditions:

- The SV_OFF command is transmitted.
- A servo alarm occurs.
- Power is turned OFF.

Specify the Stop Mode if any of these occurs during Servomotor operation.

Pn001.0	Select stop if an alarm occurs when Servomotor is OFF.	Default Setting: 2	Coasts the Servo-motor to a stop.

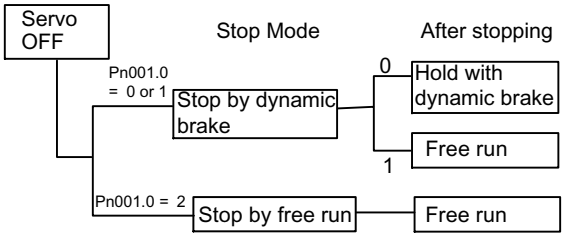

Note The dynamic brake electrically applies a brake by using a resistor to consume Servomotor rotation energy. Refer to *8.4.1 Using the Dynamic Brake*.

Parameter	Setting	Item
Pn001.0	0	Uses the dynamic brake[1] to stop the Servomotor, and maintains dynamic brake status after stopping.
	1	Uses the dynamic brake to stop the Servomotor, and cancels dynamic brake status after stopping to go into coast status.
	2 (Default setting)	Servomotor stopped with free run. The Servomotor is turned OFF and stops due to equipment friction.

Note If the Servomotor is stopped or rotating at extremely low speed when the item above is set to 0 (dynamic brake status after stopping with the dynamic brake), then braking power is not generated the same as in free fun.

[1]Dynamic brake

The dynamic brake is a common way of suddenly stopping a Servomotor. Built into the Servo Driver, the dynamic brake suddenly stops a Servomotor by electrically shorting its electrical circuit.

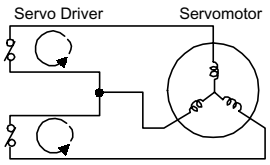

8.2.3 Fully-closed Control

A fully-closed loop can be formed using the parameter settings on the W-series Servo Driver. In previous Servo Drivers, a semi-closed method was used to control the motor, but with this function even more precise control is achieved because control involves the detection of the position and speed of actual machine operation.

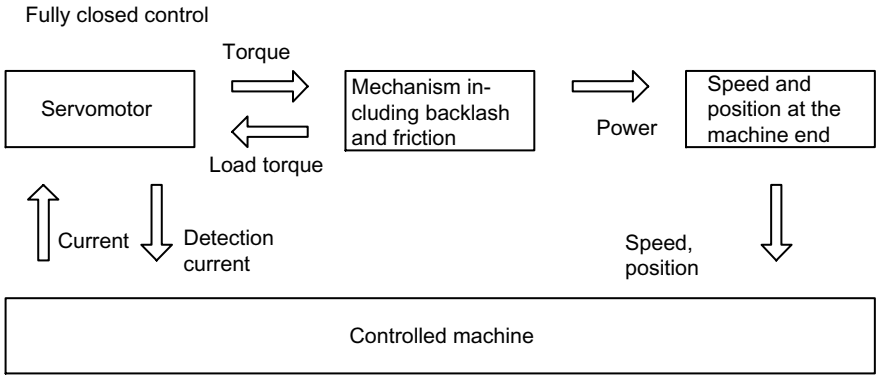

Parameters must be set when using fully-closed control. Refer to *Parameter Settings for the Fully-closed System* on *page 8-11*.

■ Fully-closed System Specifications

This section describes the fully-closed system specifications of the W-series Servo Driver when a DeviceNet Unit is mounted.

Fully-closed Encoder Pulse Output Form

5-V Differential line driver output (complies with EIA Standard RS–422A)

Fully-closed Encoder Pulse Signal Form

90° Phase difference 2-phase differential pulse: phase A, phase B

Maximum receivable frequency for Servo Driver: 1 Mbit/s

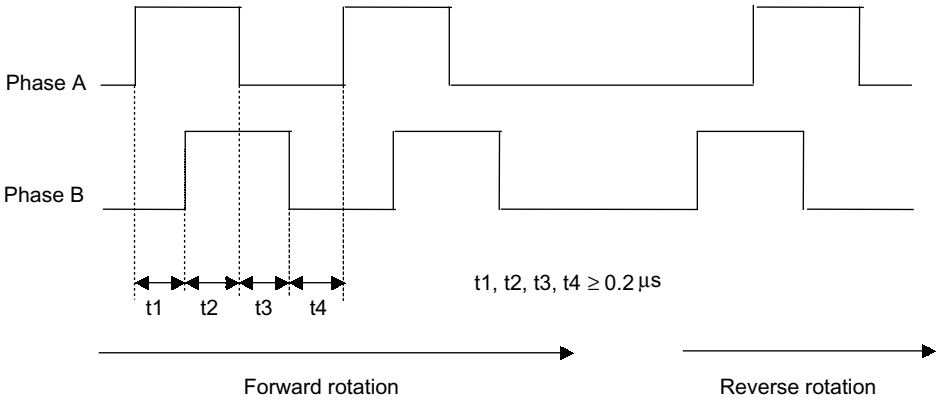

■ Parameter Settings for the Fully-closed System

This section describes the user parameters that must be set when using a DeviceNet Unit.

Overflow Level

For information on parameter contents, refer to the *OMNUC W-series Servomotors/Servo Drivers User's Manual* (I531-E1-□). The default setting is made to minimize the chance of the motor going out of control due to wiring errors or other causes. After performing a trial operation at a low speed, change the setting to a higher value if necessary.

Fully-closed Encoder

Set the method for using the fully-closed encoder.

Pn002.3	Fully-closed Encoder Usage Method	Default Setting: 0	Fully-closed encoder is not used.

The setting details are as follows:

Parameter	Setting	Meaning
Pn002.3	0 (Default setting)	Fully-closed encoder is not used.
	1	Fully-closed encoder is used without phase Z.
	2	Fully-closed encoder is used with phase Z.
	3	Fully-closed encoder is used in Reverse Rotation Mode without phase Z.
	4	Fully-closed encoder is used in Reverse Rotation Mode with phase Z.

Setting the Pn002.3 to 0 enables the operation with the normal semi-closed specifications.

When changes have been made to this parameter, turn OFF the power once. The set value will become effective when the power is turned ON again.

8

Number of Fully-closed Encoder Pulses

Set the number of fully-closed encoder pulses for each motor rotation.

When the number of fully-closed encoder pulses per motor rotation is not an integer, set the closest integer.

Error will occur in the speed monitor for position loop gain, feed forward, and command pulse, but no position displacement will occur. Set the number of pulses with a multiplication factor of 1.

Pn206	Number of Fully-closed Encoder Pulses	Unit P/R	Setting Range: 25 to 65535	Default Setting: 16384

Note Set the Pn206 to 513 or more.

When changes have been made to this parameter, turn OFF the power once. The set value will become effective when the power is turned ON again.

Motor Load Deviation Over Level

Set the allowable range of deviation of the number of pulses for fully-closed encoder and semi-closed encoder. Errors are not detected when 0 is set. Set 0 in the system where the position of the fully-closed encoder and the semi-closed encoder will be shifted due to machine slip.

Pn51A	Motor-Load Deviation Over Level	Unit Pulse	Setting Range: 0 to 32767	Default Setting: 0	Position Control

8.3 Settings According to Host Controller

This section describes the procedure for connecting the Servo Driver to the host controller and provides details on related parameters.

8.3.1 Sequence I/O Signals

Sequence I/O signals are used to control Servo Driver operation. Connect these signal terminals as required.

■ Input Signal Connections

Connect the sequence input signals as shown below (standard settings).

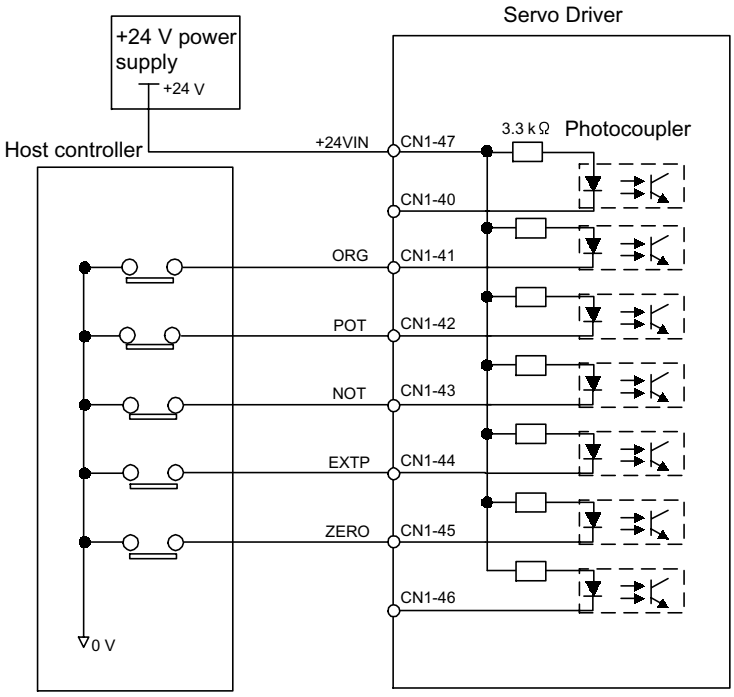

Note 1. Provide an external 24-V power supply; the Servo Driver does not have an internal 24-V power supply.

- Sequence input signal power supply specifications: 24 ± 1 V DC, 50 mA min.

2. OMRON recommends using the same external power supply as that used for output circuits. The allowable voltage range for the 24-V sequence input circuit power supply is +11 V to +25 V. Although a +12-V power supply can be used, contact faults can easily occur for relays and other mechanical contacts under low currents. Confirm the characteristics of relays and other mechanical contacts before using a 12-V power supply.

→ Input +24V IN CN1–47	24 V External Power Supply Input	Position Control

The external power supply input terminal is common to sequence input signals.

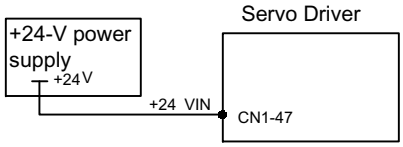

Contact input signals: ORG (CN1–41)
POT (CN1–42)
NOT (CN1–43)
EXTP (CN1–44)
ZERO (CN1–45)

■ Output Signal Connections

Connect the sequence output signals as shown in the following figure (standard settings).

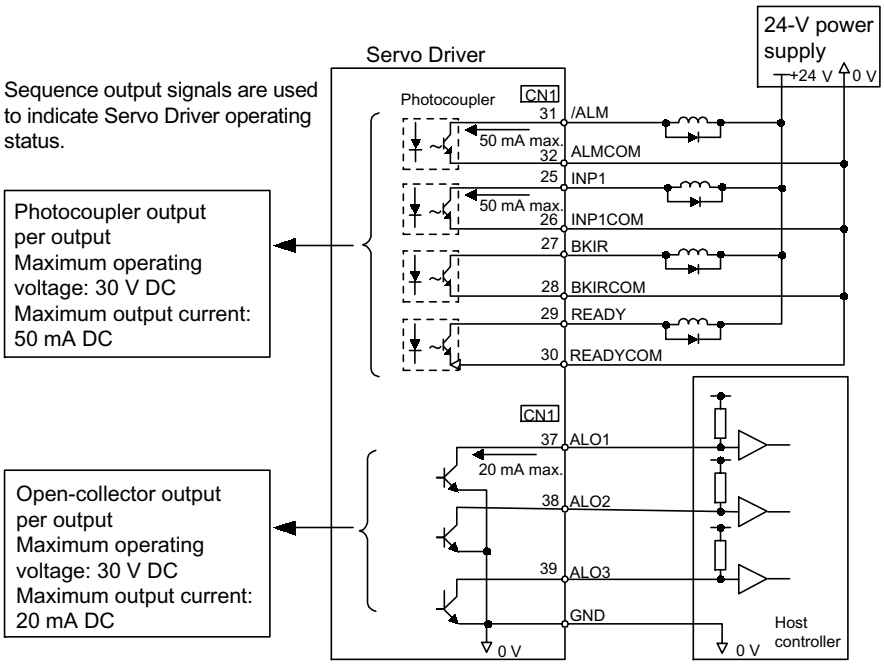

Note Provide a separate external 24-V power supply; the Servo Driver does not have an internal 24-V power supply. OMRON recommends using the same type of external power supply as that used for input circuits.

Function allocations for some sequence output signal circuits can be changed.

Refer to *Output Circuit Signal Allocations* on *page 8-5* for more details.

8.4 Setting Stop Functions

This section describes the procedure used to stably stop the Servo Driver.

8.4.1 Using the Dynamic Brake

To stop the Servomotor by applying the dynamic brake (DB), set the desired mode in the following parameter. The Servomotor will stop due to equipment friction if the dynamic brake is not applied.

Pn001.0	Select stop if an alarm occurs when Servomotor is OFF.	Default Setting: 0	Coasts the Servomotor to a stop.

The Servo Driver turns OFF under the following conditions:

- When the SV_OFF Command is sent.
- A servo alarm occurs.
- Power is turned OFF.

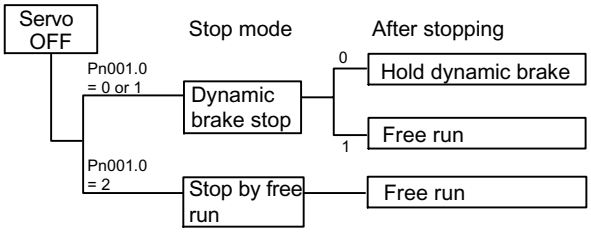

Specify the Stop Mode if any of these occurs during Servomotor operation.

Pn001.0 Setting	Description
0	Uses the dynamic brake to stop the Servomotor. Maintains dynamic brake after the Servomotor stops. *1
1	Uses the dynamic brake to stop the Servomotor. Releases dynamic brake after the Servomotor stops, and the Servomotor coasts to a stop.
2 (Default setting)	Servomotor stopped with free run.*2 The Servomotor is turned OFF and stops due to equipment friction.

* 1. If the Servomotor is stopped or moving at extremely low speed, it will stop by free run.
* 2. A dynamic brake is used when the control power and main power are turned OFF.

Note The dynamic brake is an emergency stop function. Do not repeatedly start and stop the Servomotor using the SV_ON/SV_OFF command or by repeatedly turning power ON and OFF, because the Servo Driver internal elements will deteriorate.

8.4.2 Using the Holding Brake

The holding brake is used when a Servo Driver controls a vertical axis. In other words, a Servomotor with brake prevents the movable part from shifting due to gravity when system power goes OFF.

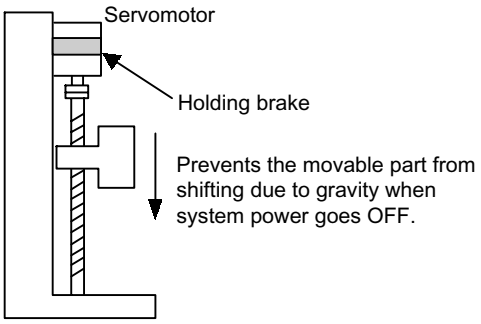

Note The brake built into the Servomotor with brakes is a non-excitation brake, which is used only to hold and cannot be used for braking. Use the holding brake only to hold a stopped motor. Brake torque is at least 120% of the rated Servomotor torque.

■ Wiring Example

Use the Servo Driver sequence output signal BKIR and the brake power supply to form a brake ON/OFF circuit. The following diagram shows a standard wiring example.

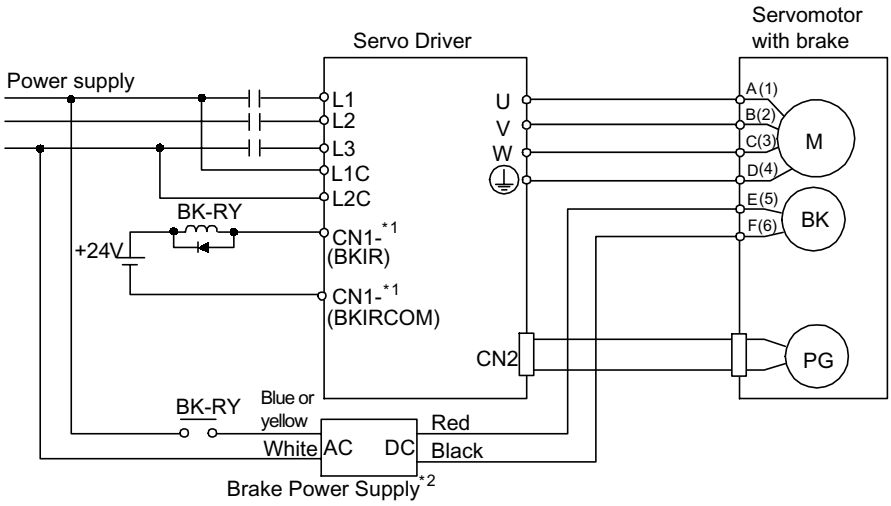

BK-RY: Brake control relay

* 1. The output terminal signal is allocated with Pn50F.2.
* 2. Brake power supplies are available in 200-V and 100-V models.

Output to BKIR	Brake Interlock Output	Position Control

This output signal controls the brake when using a Servomotor with a brake and does not have to be connected when using a Servomotor without a brake.

ON	Closed or low level	Releases the brake.
OFF	Open or high level	Applies the brake.

Related Parameters

Pn005	Brake Operation
Pn506	Brake Timing 1
Pn507	Brake Command Speed
Pn508	Brake Timing 2

The output signal in the following parameter must be selected when the BKIR signal is used.

Pn50F	Output Signal Selection 2	Default Setting: 0000	Not allocated

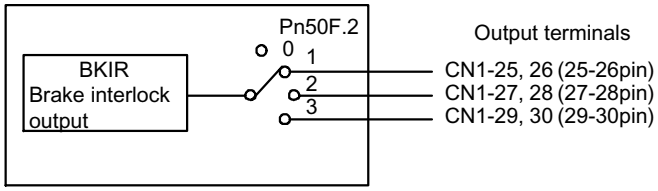

Select the terminal to which the BKIR is output.

Parameter	Setting	Output Terminal (CN1-)	
		*1	*2
Pn50F.2	0	–	–
	1	25	26
	2	27	28
	3	29	30

Note Signals are output with OR logic when multiple signals are allocated to the same output circuit. Set other output signals to a value other than that allocated to the BKIR signal in order to output the BKIR signal alone. Refer to *8.1.3 Standard Settings for I/O Signals.*

■ Brake Operation

Set whether the brake is applied using the Servo Driver parameter.

Pn005.0	Brake Operation	Default Setting: 0	Performs brake operation.

Pn005.0 Setting	Description
0	Performs brake operation using the Servo Driver parameter.
1	Does not perform brake operation using the Servo Driver parameter.

Note When setting the Pn005.0 to 1, the Servo Driver's parameters (Pn506, Pn507, Pn508) settings will be ignored.

■ Brake ON Timing

If the equipment moves slightly due to gravity when the brake is applied, set the following parameter to adjust brake ON timing.

Pn506	Brake Timing 1	Unit: 10 ms	Setting Range: 0 to 50	Default Setting: 0	No time delay

This parameter is used to set the output time from the brake control output signal BKIR until the servo OFF operation (Servomotor output stop) when a Servomotor with a brake is used.

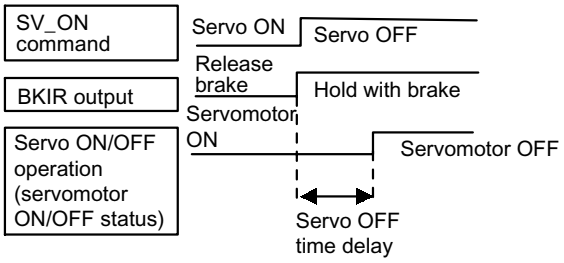

With the standard setting, the servo is turned OFF when the BKIR signal (brake operation) is output. The equipment may move slightly due to gravity depending on equipment configuration and brake characteristics. If this happens, use this parameter to delay servo OFF timing.

This setting sets the brake ON timing when the Servomotor is stopped. Use Pn507 and 508 for brake ON timing during operation.

Note The Servomotor will turn OFF immediately if an alarm occurs. The equipment may move due to gravity in the time it takes for the brake to operate.

■ Holding Brake Setting

Set the following parameters to adjust brake ON timing so the holding brake is applied when the Servomotor stops.

Pn507	Brake Command Speed	Unit: r/min	Setting Range: 0 to 10000	Default Setting: 100
Pn508	Brake Timing 2	Unit: 10 ms	Setting Range: 10 to 100	Default Setting: 50

Set the brake timing used when the servo is turned OFF by the SV_OFF command or when an alarm occurs during Servomotor with brake operation.

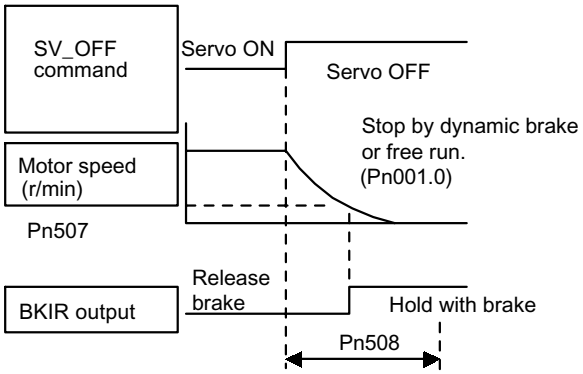

Brake ON timing when the Servomotor stops must be adjusted properly because Servomotor brakes are designed as holding brakes. Adjust the parameter settings while observing equipment operation.

BKIR Signal Output Conditions During Servomotor Operation

The circuit is open under either of the following conditions:

1	Motor speed drops below the setting at Pn507 after servo OFF.
2	The time set at Pn508 has elapsed since servo OFF.

The actual setting will be the maximum speed if Pn507 is set higher than the maximum speed.

8.5 Absolute Encoders

If a Servomotor with an absolute encoder is used, a system to detect the absolute position can be made in the host controller. Consequently, operation can be performed without performing an origin search immediately after the power is turned ON.

Motor R88M-W□□□□□T-□···With absolute encoder

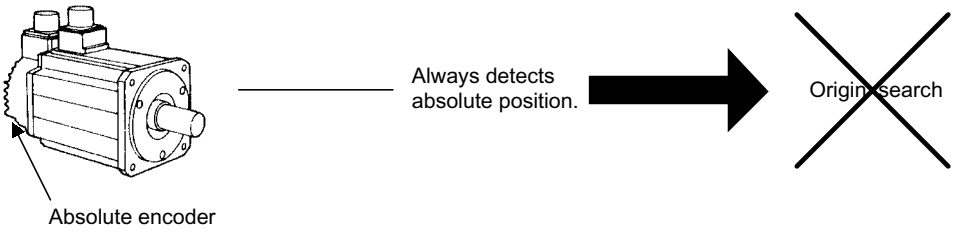

8.5.1 Selecting an Absolute Encoder

Select the absolute encoder usage with the following parameter.

Pn002.2	Operation Switch When Using Absolute Encoder	Default Setting: 0	Uses the absolute encoder as an absolute encoder.

"0" in the following table must be set to enable the absolute encoder.

Pn002.2 Setting	Description
0	Uses the absolute encoder as an absolute encoder.
1	Uses the absolute encoder as an incremental encoder.

Note This parameter setting goes into effect when the power is turned OFF and ON again after the change has been made.

8.5.2 Absolute Encoder Setup (Initialization)

Perform the setup operation for the absolute encoder in the following circumstances:

- When starting the machine for the first time
- When an encoder backup alarm is generated
- When the Servo Driver's power supply is turned OFF and the encoder's cable is removed

Perform the setup operation in one of the following ways.

- Perform the operation by the absolute encoder (Fn008) using the Parameter Unit or the Servo Driver's front key. Refer to the *OMNUC W-series Servomotors/Servo Drivers User's Manual* (I531-E1-□) for details.
- Perform the operation referring to *Setup Tool Software* (SBCE-001).

Note 1. The absolute encoder setup operation is only possible when the servo is OFF. After the setup processing is finished, turn the power OFF and then ON again.

2. If the following absolute encoder alarms are displayed, the alarms must be cleared using the method described above for the setup operation. They cannot be cleared using the Alarm Reset Command.

- Backup Error (A.81)
- Checksum Error (A.82)

In addition, if a monitoring alarm is generated in the encoder, release the alarm by turning OFF the power.

8.5.3 Absolute Encoder Multi-turn Limit Setting

When implementing absolute position detection systems for machines that turn m times in response to n turns in the load shaft, such as round tables, it is convenient to reset the multi-turn data from the encoder to 0 every m turns. The Absolute Encoder Multi-turn Limit[1] Setting allows the value m to be set for the encoder.

The Absolute Encoder Multi-turn Limit is set in the Servo Driver using the following parameter.

Pn205	Absolute Encoder Multi-turn Limit Setting	Unit: rev	Setting Range: 0 to 65535	Default Setting: 65535

If the Absolute Encoder Multi-turn Limit Setting is set to 65535 (default setting), the multi-turn data will vary from -32768 to +32767. If any other value is set, the multi-turn data will vary from 0 to the setting of Pn205.

If the Servomotor rotates in the negative direction from 0, the multi-turn data will change to the value set for Pn205. If the Servomotor rotates in the positive direction from the value set in Pn205, the multi-turn data will change to 0. Set Pn205 to m-1.

[1] Absolute Encoder Multi-turn Limit

The upper limit of multi-turn data. The multi-turn data will vary between 0 and the value of Pn205 (Absolute Encoder Multi-turn Limit Setting) when Pn002.2 is set to 0.

Note Turn the power OFF and then ON after changing the setting of parameter Pn002.2 or Pn205.

The Absolute Encoder Multi-turn Limit value in the encoder is default set to 65535, the same as the Servo Driver. If the multi-turn limit value in the Servo Driver is changed with Pn205 and then the Servo Driver power is turned OFF and ON, the following alarm will occur.

Alarm Name: Absolute Encoder Multi-turn Limit Mismatch (A.CC)

Alarm Display	Alarm Code Outputs			Description of Alarm
	ALO1	ALO2	ALO3	
A.CC	ON	OFF	ON	The multi-turn limit value is different in the encoder and Servo Driver.

Note ON signals are low level; OFF signals are high level.

When this alarm occurs, the Absolute Encoder Multi-turn Limit in the encoder must be changed. Refer to the *OMNUC W-series Servomotors/Servo Drivers User's Manual* (I531-E1-□) for details on changing the multi-turn limit setting (Fn013) using a Parameter Unit or a Servo Driver front key. Setup can also be performed using the personal computer monitor software.

Note 1. The Absolute Encoder Multi-turn Limit setting in the encoder can be changed only when the Absolute Encoder Multi-turn Limit Mismatch (A.CC) alarm has occurred. After changing the setting, turn the power supply OFF and then ON.

2. The Absolute Encoder Multi-turn Limit value must be changed only for special applications. Do not change this data inappropriately or unintentionally.

3. If the Absolute Encoder Multi-turn Limit Mismatch (A.CC) alarm occurs, check the setting of parameter Pn205 in the Servo Driver to be sure that it is correct. If Fn013 is executed when an incorrect value is set in Pn205, an incorrect value will be set in the encoder. The alarm will disappear even if an incorrect value is set, but incorrect positions will be detected, resulting in a dangerous situation where the machine will move to unexpected positions.

8.6 Parameter Unit

A Parameter Unit is required to operate and monitor the Servo Driver from a remote location or from a control panel. To connect the Parameter Unit to the Servo Driver, use a special Parameter Unit cable and connect it to the CN3 connector on the front panel of the Servo Driver.

One meter of cable is provided with the Parameter Unit. If a distance of one meter between the Parameter Unit and the Servo Driver is not enough, purchase a 2-m Parameter Unit cable (R88A-CCW002C) separately.

Note 1. With a DeviceNet Unit mounted, a DeviceNet communications timeout will occur if a Servo Driver Parameter Write Command data is sent via DeviceNet while a Parameter Unit is connected or while communications with a personal computer are in progress.

2. With a DeviceNet Unit mounted, the LED indicators on the front panel of the Servo Driver will turn OFF when a Parameter Unit is mounted, and turn ON again when it is removed. This is not a malfunction. The LED indicators will also turn OFF in the following circumstances:

- At power-up (for approximately 3 s).
- When data tracing is executed via DeviceNet.
- When Servo Driver Parameter Read or Write Command data is sent via DeviceNet or from the Setup Tool. (The indicators turn OFF momentarily.)

9

Troubleshooting

This chapter describes troubleshooting.
In addition, troubleshooting procedures are described for problems which cause an alarm display and for problems which result in no alarm display.

9.1 Alarm Display Table - 9-2
9.2 Warning Display Table - 9-5
9.3 Troubleshooting with Alarm Displays - 9-6
9.4 Error Diagnosis Due To Operating Status - - - - - - - - - - - - - - 9-44

9.1 Alarm Display Table

The alarm display and the relationship between ON/OFF alarm code outputs are shown in *Table 9.1*.

Table 9.1 Alarm Display Table

Alarm Display	Alarm Code Outputs			Servo Alarm Output	Alarm Name	Description
	ALO1	ALO2	ALO3			
A.02	OFF	OFF	OFF	OFF	Parameter Corruption*2	EEPROM data of Servo Driver is abnormal.
A.03					Main-circuit Detection Error	Detection data for power circuit is abnormal.
A.04					Parameter Setting Error*2	The parameter setting is out of the allowable setting range.
A.05					Servomotor Mismatch	Servo Driver and Servomotor capacities do not match each other.
A.10	ON	OFF	OFF	OFF	Overcurrent*2	An overcurrent flowed through the IGBT. Heat sink of Servo Driver was overheated.
A.30	ON	ON	OFF	OFF	Regeneration Error	• Regenerative resistor is disconnected. • Regenerative transistor is defective.
A.32					Regeneration Overload	Regenerative energy exceeds regenerative resistor capacity.
A.33	ON	ON	OFF	OFF	Main-circuit Power Supply Setting Error	The AC/DC wiring method of the main circuit power supply is different from the setting of the parameter Pn001.2 (Power Supply AC/DC Input Selection).
A.40	OFF	OFF	ON	OFF	Overvoltage *3	Main circuit DC voltage is excessively high.
A.41					Low Voltage *3	Main circuit DC voltage is low.
A.51	ON	OFF	ON	OFF	Overspeed	Rotational speed of the motor is excessively high.
A.71	ON	ON	ON	OFF	Overload	The motor was operating for several seconds to several tens of seconds under a torque largely exceeding ratings.
A.72					Overload	The motor was operating continuously under a torque largely exceeding rating.
A.73					Dynamic Brake Overload	When the dynamic brake was applied, rotational energy exceeded the capacity of dynamic brake resistor.
A.74					Inrush Resistance Overload	The main circuit power was frequently turned ON and OFF.
A.7A					Overheat*1	The heat sink of Servo Driver is overheated.

Table 9.1 Alarm Display Table (cont'd)

Alarm Display	Alarm Code Outputs			Servo Alarm Output	Alarm Name	Description
	ALO1	ALO2	ALO3			
A.81	OFF	OFF	OFF	OFF	Backup Error*2	All the power supplies for the absolute encoder have failed and position data was cleared.
A.82					Checksum Error*2	The checksum results of the absolute encoder memory are abnormal.
A.83					Battery Error	Backup battery voltage for the absolute encoder has dropped.
A.84					Absolute Error*2	Data in the encoder is abnormal.
A.85					Overspeed Error	The Servomotor was rotating at 200 r/min or more when the power was turned ON.
A.86					Encoder Overheating	The internal temperature of encoder is too high.
A.B1					Speed Command Input Reading Error	The A/D converter for speed command input is defective.
A.B2					Torque Command Input Reading Error	The A/D converter for torque command input is defective.
A.B6					Gate Array Error	Communications LSI error.
A.BF					System Error *2	A system error occurred in the Servo Driver.
A.C1	ON	OFF	ON	OFF	Runaway Detected	The Servomotor ran out of control.
A.C6					Fully-closed Encoder Phase-A, -B Disconnection	Phase A or B of the fully-closed encoder was disconnected.
A.C7					Fully-closed Encoder Phase-Z Disconnection	Phase Z of the fully-closed encoder was disconnected.
A.C8					Multi-turn Data Error*2	The multi-turn for the absolute encoder was not properly cleared or set.
A.C9					Encoder Communications Error *2	Communications between Servo Driver and encoder is not possible.
A.CA					Encoder Parameter Error *2	Encoder parameters are incorrect.
A.CB					Encoder Data Error *2	Contents of communications with encoder are incorrect.
A.CC					Multi-turn Limit Discrepancy	Different multi-turn limits have been set in the encoder and Servo Driver.
A.D0	ON	ON	OFF	OFF	Deviation Counter Overflow	Lag pulse of the deviation counter exceeded the parameter (Pn505).
A.D1					Motor-Load Deviation Over	The Motor-Load Deviation Over Level (Pn51A) was exceeded for fully-closed encoder and semi-closed encoder.

Table 9.1 Alarm Display Table (cont'd)

Alarm Display	Alarm Code Outputs			Servo Alarm Output	Alarm Name	Description
	ALO1	ALO2	ALO3			
A.E0	OFF	ON	ON	OFF	No DeviceNet Unit *2	No DeviceNet Unit installed.
A.E1					DeviceNet Unit Timeout *2	No response from the DeviceNet Unit.
A.E2					WDC Error of DeviceNet Unit *2	WDC error in the DeviceNet Unit.
A.E6					DeviceNet Duplicate MAC ID Error	Same node address already exists on the DeviceNet network.
A.E7					DeviceNet Unit Detection Error	No DeviceNet Unit was detected when the power was supplied to the W-series Servo Driver.
A.E8					Rotary Switch Setting Error	Unit rotary switch setting error.
A.E9					DeviceNet Busoff Error	Fatal communications error has occurred in DeviceNet communications.
A.EA					Servo Driver System Error *2	Servo Driver is defective.
A.EB					Servo Driver Initial Access Error *2	Initial processing failed.
A.EC					WDC Error of Servo Driver	WDC error in the Servo Driver.
A.ED					Command Execution Incomplete Error	Command was interrupted.
A.EE					Option Parameter Error	The parameters of the DeviceNet Unit contains abnormalities.
A.F1	OFF	ON	OFF	OFF	Missing Phase Detected	One phase in the 3-phase main power supply is not connected.
CPF00	Not specified				Parameter Unit Transmission Error	Communications not possible between Parameter Unit (R88A-PR02W) and the Servo Driver (CPU error).
CPF01						
A.- -	OFF	OFF	OFF	ON	Not an error	Normal operation status.

* 1. This alarm display appears only within the range of 30 W to 1,000 W.
* 2. These alarms are not reset for the Alarm Reset Command. Eliminate the cause of the alarm and then turn OFF the power supply to reset the alarms.
* 3. For Servo Drivers with a capacity of 6.0 kW or more, A.40 indicates a main-circuit detection error alarm. This means that either an overvoltage or a low voltage has occurred at some stage.

Note OFF: Output transistor is OFF (high). ON: Output transistor is ON (low).

9.2 Warning Display Table

The warning display and the relationship between ON/OFF warning code outputs are shown in *Table 9.2*.

Normally, warning codes are not output. However, if the parameters are set for warning codes to be output, those outputs will be as indicated in *Table 9.3*.

Table 9.2 Warning Display and Warning Code Outputs

Warning Display	Warning Code Outputs			Servo Alarm Output	Warning Name	Description
	ALO1	ALO2	ALO3			
A.91	ON	OFF	OFF	ON	Overload	This warning occurs before the overload alarms (A.71 or A.72) occur. If the warning is ignored and operation continues, an overload alarm may occur.
A.92	OFF	ON	OFF	ON	Regeneration Overload	This warning occurs before the regenerative overload alarm (A.32) occurs. If the warning is ignored and operation continues, a regenerative overload alarm may occur.
A.93	ON	ON	OFF	ON	Battery Warning	This warning occurs before the absolute encoder battery error alarm occurs. If the power supply is turned OFF, the alarm may occur when the power supply is turned ON.
A.94	OFF	OFF	ON	ON	Parameter Setting Warning	A value outside the setting range was set using DeviceNet communications. • Incorret parameter No. and data at the Parameter Write Command. • Incorrect parameter No. at the Parameter Read Command
A.95	ON	OFF	ON	ON	Command Warning	A command not supported in the product specifications was issued. The command reception conditions were not met. • Illegal command • Command given during execution of another move command • Command given during servo OFF • Command given during alarm • Command given during emergency stop • Move command data error
A.96	OFF	ON	ON	OFF	Communications Warning	A DeviceNet communications error occurred (once).
A.98	OFF	OFF	OFF	OFF	Main Power OFF	The main power supply is not being supplied.
A.9A	OFF	ON	OFF	OFF	Positioning Timer Timeout	Positioning was not completed within the positioning monitoring time.

Note OFF: Output transistor is OFF (high). ON: Output transistor is ON (low).

9.3 Troubleshooting with Alarm Displays

Problems that occur in the Servo Drivers are displayed on the Servo Driver's front display as “A.□□” or “CPF□□”. “A.- -”, however, does not indicate an alarm. Refer to the following sections to identify the cause of an alarm and the action to be taken.

Contact your OMRON representative if the problem cannot be solved by the described procedures.

■ A.02

A.02: Parameter Corruption

Display and Outputs

Alarm Outputs			
Alarm Code Outputs			ALM Output
ALO1	ALO2	ALO3	
OFF	OFF	OFF	OFF

Note OFF: Output transistor is OFF (alarm state).

Status and Remedy for Alarm

At power on —— A, B, C

Cause		Remedy
A	Power turned OFF during parameter write. Alarm occurred at the next power ON.	• Initialize parameters using Fn005 and reinput user settings. • Replace the Servo Driver.
B	Circuit board (1PWB) is defective.	Replace the Servo Driver.
C	The DeviceNet Unit is defective.	Replace the DeviceNet Unit.

■ A.03

A.03: Main-circuit Detection Error

Display and Outputs

Alarm Outputs			
Alarm Code Outputs			ALM Output
ALO1	ALO2	ALO3	
OFF	OFF	OFF	OFF

Note OFF: Output transistor is OFF (alarm state).

Status and Remedy for Alarm

Cause		Remedy
A	Circuit board (1PWB or 2PWB) is defective.	Replace the Servo Driver.

■ A.04

A.04: Parameter Setting Error

Display and Outputs

Alarm Outputs			
Alarm Code Outputs			ALM Output
ALO1	ALO2	ALO3	
OFF	OFF	OFF	OFF

Note OFF: Output transistor is OFF (alarm state).

Status and Remedy for Alarm

Cause		Remedy
A	An out-of-range parameter was previously set or loaded.	• Reset all user parameters in range. • Otherwise, re-load the correct parameter.
B	Circuit board (1PWB) is defective.	Replace the Servo Driver.
C	The DeviceNet Unit is defective.	Replace the DeviceNet Unit.

■ A.05

A.05: Servomotor Mismatch

Display and Outputs

Alarm Outputs			
Alarm Code Outputs			ALM Output
ALO1	ALO2	ALO3	
OFF	OFF	OFF	OFF

Note OFF: Output transistor is OFF (alarm state).

Status and Remedy for Alarm

Cause		Remedy
A	The range of Servomotor capacities that can be combined has been exceeded.	Replace the Servomotor so that a suitable combination is achieved.
B	Encoder parameters have not been written properly.	Replace the Servomotor.

■ A.10

A.10: Overcurrent

Display and Outputs

Alarm Outputs			
Alarm Code Outputs			ALM Output
ALO1	ALO2	ALO3	
ON	OFF	OFF	OFF

Note OFF: Output transistor is OFF (alarm state). ON: Output transistor is ON.

Status and Remedy for Alarm

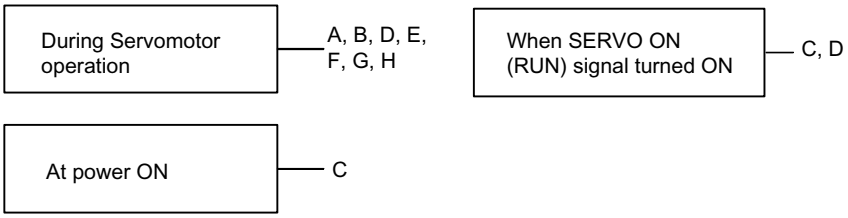

Cause		Remedy
A	Wiring shorted between Servo Driver and Servomotor.	Check and correct wiring.
B	Servomotor phase U, V, or W shorted.	Replace the Servomotor.
C	• Circuit board (1PWB) is defective. • Power transistor is defective.	Replace the Servo Driver.
D	Current feedback circuit, power transistor, DB relay, or circuit board is defective.	Replace the Servo Driver.
E	The ambient temperature of the Servo Driver exceeded 55 °C.	Alter conditions so that the ambient temperature goes below 55 °C.
F	The air flow around the heat sink is bad.	Follow the installation method and provide sufficient space as specified.
G	Fan stopped.	Replace the Servo Driver.
H	The Servo Driver is operating under an overload.	Reduce load.

Note E to H can occur with 200-V Servo Driver models for 1.5 to 5 kW.

■ A.30

A.30: Regeneration Error

Display and Outputs

Alarm Outputs			
Alarm Code Outputs			ALM Output
ALO1	ALO2	ALO3	
ON	ON	OFF	OFF

Note OFF: Output transistor is OFF (alarm state). ON: Output transistor is ON.

Status and Remedy for Alarm

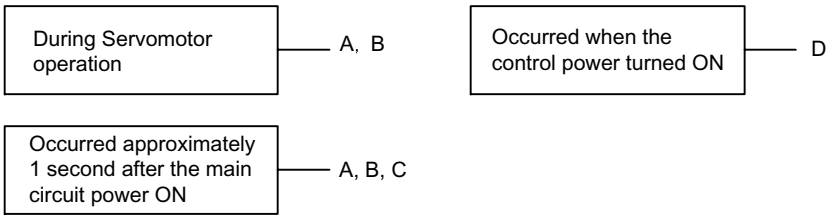

Cause		Remedy
A	Regenerative transistor is abnormal.	Replace the Servo Driver.
B	Disconnection of the regenerative resistor.	Replace the Servo Driver or regenerative resistor.
C	Regenerative resistor is disconnected (for an external regenerative resistor).	Check wiring of the external regenerative resistor.
D	The Servo Driver is defective.	Replace the Servo Driver.

■ A.32

A.32: Regeneration Overload

Display and Outputs

Alarm Outputs			
Alarm Code Outputs			ALM Output
ALO1	ALO2	ALO3	
ON	ON	OFF	OFF

Note OFF: Output transistor is OFF (alarm state). ON: Output transistor is ON.

Status and Remedy for Alarm

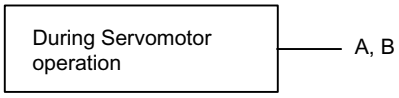

Cause		Remedy
A	Regenerative power exceeds the allowable value.	Use an external regenerative resistor that matches the regenerative power capacity.
B	Alarm occurs although an external regenerative resistor is used and the temperature rise of the regenerative resistor is small.	Reset the incorrect Pn600 user parameter setting.

■ A.40

A.40: Main Circuit DC Voltage Error Detected: Overvoltage

Display and Outputs

Alarm Outputs			
Alarm Code Outputs			ALM Output
ALO1	ALO2	ALO3	
OFF	OFF	ON	OFF

Note OFF: Output transistor is OFF (alarm state). ON: Output transistor is ON.

Status and Remedy for Alarm

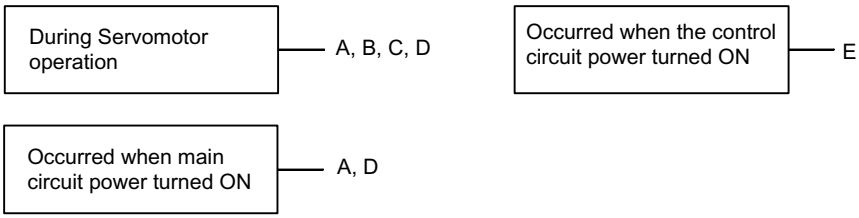

Cause		Remedy
A	The power supply voltage is not within the range of specifications.	Check power supply.
B	Load exceeds capacity of the Regenerative Unit.	Check specifications of load inertia and overhanging load.
C	Regenerative transistor is abnormal.	Replace the Servo Driver.
D	Rectifying diode is defective.	
E	The Servo Driver is defective.	

■ A.41

A.41: Main Circuit DC Voltage Error Detected: Low Voltage

Display and Outputs

Alarm Outputs			
Alarm Code Outputs			ALM Output
ALO1	ALO2	ALO3	
OFF	OFF	ON	OFF

Note OFF: Output transistor is OFF (alarm state). ON: Output transistor is ON.

Status and Remedy for Alarm

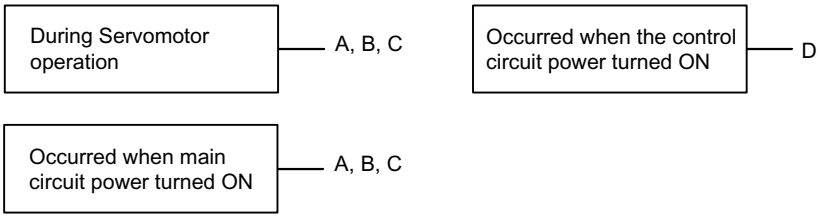

Cause		Remedy
A	The power supply voltage is not within the range of specifications.	Check power supply voltage.
B	Fuse blown.	Replace the Servo Driver.
C	Rectifying diode is defective.	
D	The Servo Driver is defective.	

■ A.51

A.51: Overspeed

Display and Outputs

Alarm Outputs			
Alarm Code Outputs			ALM Output
ALO1	ALO2	ALO3	
ON	OFF	ON	OFF

Note OFF: Output transistor is OFF (alarm state). ON: Output transistor is ON.

Status and Remedy for Alarm

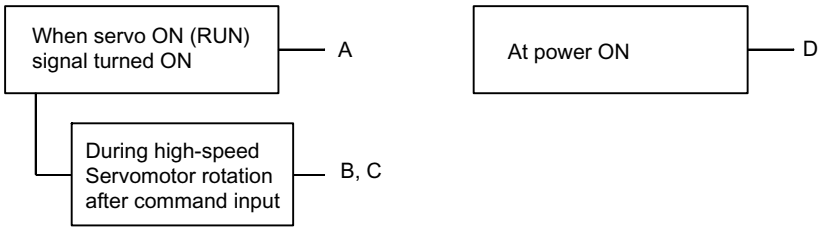

Cause		Remedy
A	Servomotor wiring is incorrect.	Check and correct wiring. (Check phase-U, -V, and -W motor wiring errors.)
B	Position or speed command input is too large.	Lower the command input values.
C	Incorrect command input gain settings.	Check and correct the parameter settings.
D	Circuit board (1PWB) is defective.	Replace the Servo Driver.

■ A.71

A.71: Overload: Instantaneous Maximum Load

The alarm output, the status when LEDs are lit, and the remedy procedure are identical to those of A.72 below.

■ A.72

A.72: Overload: Continuous Maximum Load

Display and Outputs

Alarm Outputs			
Alarm Code Outputs			ALM Output
ALO1	ALO2	ALO3	
ON	ON	ON	OFF

Note OFF: Output transistor is OFF (alarm state). ON: Output transistor is ON.

Status and Remedy for Alarm

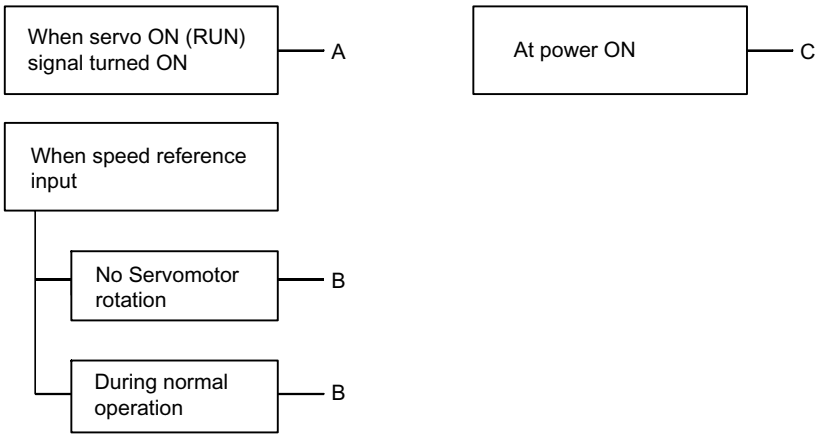

Cause		Remedy
A	Servomotor wiring is incorrect or disconnected.	Check wiring and connectors at Servomotor.
B	Load greatly exceeds rated torque.	Reduce load torque and inertia. Otherwise, replace with a larger capacity Servomotor.
C	Circuit board (1PWB) is defective.	Replace the Servo Driver.

■ A.73

A.73: Dynamic Brake Overload

Display and Outputs

Alarm Outputs			
Alarm Code Outputs			ALM Output
ALO1	ALO2	ALO3	
ON	ON	ON	OFF

Note OFF: Output transistor is OFF (alarm state). ON: Output transistor is ON.

Status and Remedy for Alarm

When servo OFF signal turned ON during Servomotor operation — A

At power ON — B

Cause		Remedy
A	The product of the square of rotational motor speed and the combined inertia of the motor and load (rotation energy) exceeds the capacity of the dynamic brake resistor built into Servo Driver.	• Lower the rotational speed. • Lower the load inertia. • Do not frequently use dynamic braking.
B	Circuit board (1PWB) is defective.	Replace the Servo Driver.

■ A.74

A.74: Inrush Resistance Overload

Display and Outputs

Alarm Outputs			
Alarm Code Outputs			ALM Output
ALO1	ALO2	ALO3	
ON	ON	ON	OFF

Note OFF: Output transistor is OFF (alarm state). ON: Output transistor is ON.

Status and Remedy for Alarm

When main circuit power turned ON or OFF — A

At power ON — B

Cause		Remedy
A	Frequently turning the main circuit power ON/OFF.	Do not repeatedly turn ON/OFF the main circuit power.
B	Circuit board (1PWB) is defective.	Replace the Servo Driver.

■ A.7A

A.7A: Overheat

Display and Outputs

Alarm Outputs			
Alarm Code Outputs			ALM Output
ALO1	ALO2	ALO3	
ON	ON	ON	OFF

Note OFF: Output transistor is OFF (alarm state). ON: Output transistor is ON.

Status and Remedy for Alarm

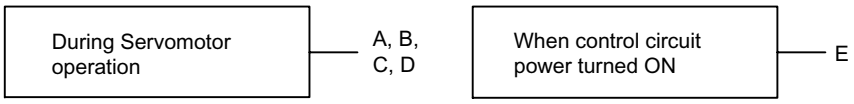

Cause		Remedy
A	The ambient temperature of the Servo Driver exceeds 55 °C.	Alter conditions so that the ambient temperature goes below 55 °C.
B	The air flow around the heat sink is bad.	Follow installation method and provide sufficient surrounding space as specified.
C	Fan stopped.	Replace the Servo Driver.
D	The Servo Driver is operating under overload.	Reduce load.
E	The Servo Driver is defective.	Replace the Servo Driver.

Note This alarm display tends to occur only with a Servo Driver of 30 W to 1,000 W.

■ A.81

A.81: Backup Error

Display and Outputs

Alarm Outputs			
Alarm Code Outputs			ALM Output
ALO1	ALO2	ALO3	
OFF	OFF	OFF	OFF

Note OFF: Output transistor is OFF (alarm state).

Status and Remedy for Alarm

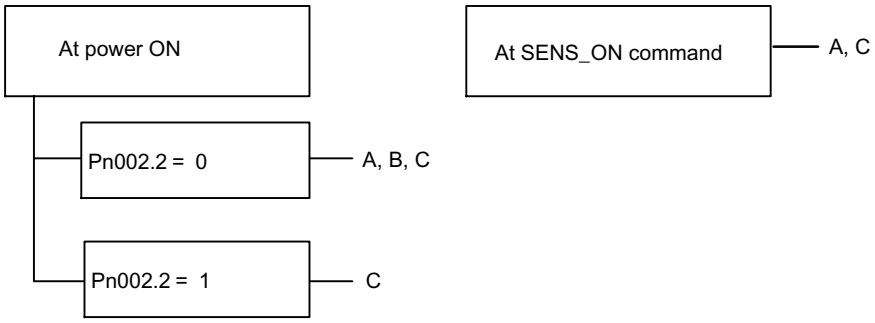

Cause		Remedy
A	The following power supplies to the absolute encoder all failed: • +5 V supply (supplied from Servo Driver) • Battery	Follow absolute encoder set–up procedure.
B	Absolute encoder malfunctioned.	Replace the Servomotor.
C	Circuit board (1PWB) is defective.	Replace the Servo Driver.

■ A.82

A.82: Checksum Error

Display and Outputs

Alarm Outputs			
Alarm Code Outputs			ALM Output
ALO1	ALO2	ALO3	
OFF	OFF	OFF	OFF

Note OFF: Output transistor is OFF (alarm state).

Status and Remedy for Alarm

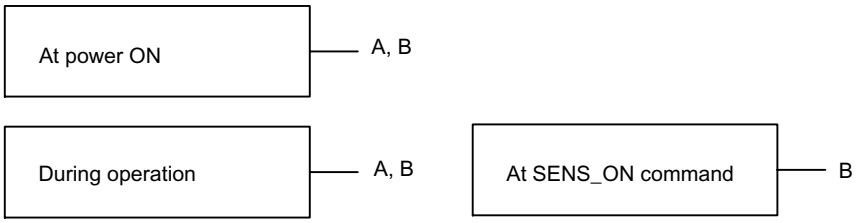

Cause		Remedy
A	Error during encoder memory check	• Follow absolute encoder setup procedure. • Replace Servomotor if error occurs frequently.
B	Circuit board (1PWB) is defective.	Replace the Servo Driver.

■ A.83

A.83: Battery Error

Display and Outputs

Alarm Outputs			
Alarm Code Outputs			ALM Output
ALO1	ALO2	ALO3	
OFF	OFF	OFF	OFF

Note OFF: Output transistor is OFF (alarm state).

Status and Remedy for Alarm

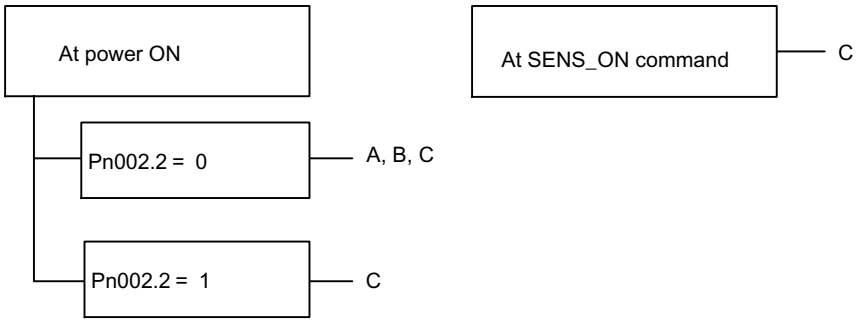

Cause		Remedy
A	• Battery is not connected. • Battery connection is defective.	Check and correct battery connection.
B	Battery voltage below specified value. Specified value: 2.7 V	Install a new battery while the control circuit power to Servo Driver is ON. After replacement, turn the power OFF and ON.
C	Circuit board (1 PWB) is defective.	Replace the Servo Driver.

Note No alarm will occur at the Servo Driver if the battery error occurs during operation.

■ A.84

A.84: Absolute Error

Display and Outputs

Alarm Outputs			
Alarm Code Outputs			ALM Output
ALO1	ALO2	ALO3	
OFF	OFF	OFF	OFF

Note OFF: Output transistor is OFF (alarm state).

Status and Remedy for Alarm

Cause		Remedy
A	Encoder is defective.	Replace the Servomotor if the error occurs frequently.
B	Encoder operational error caused by external noise.	Check and correct wiring around the encoder as follows: • Grounding of the Servomotor • Separation between the encoder cable and the Servomotor power cable • Insertion of toroidal cores onto cables

■ A.85

A.85: Overspeed Error

Display and Outputs

Alarm Outputs			
Alarm Code Outputs			ALM Output
ALO1	ALO2	ALO3	
OFF	OFF	OFF	OFF

Note OFF: Output transistor is OFF (alarm state).

Status and Remedy for Alarm

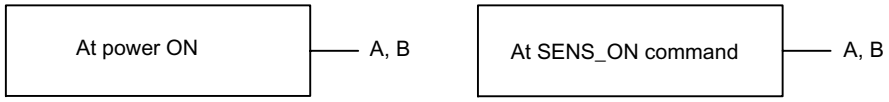

Cause		Remedy
A	Absolute encoder turned ON at a speed exceeding 200 r/min.	Turn ON power supply again with the Servomotor stopped.
B	Circuit board (1PWB) is defective.	Replace the Servo Driver.

■ A.86

A.86: Encoder Overheating

Display and Outputs

Alarm Outputs			
Alarm Code Outputs			ALM Output
ALO1	ALO2	ALO3	
OFF	OFF	OFF	OFF

Note OFF: Output transistor is OFF (alarm state).

Status and Remedy for Alarm

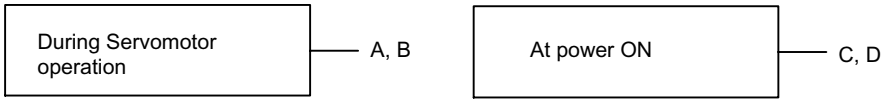

Cause		Remedy
A	The ambient temperature of the Servomotor is high.	Alter conditions so that the ambient temperature goes below 40 °C.
B	Servomotor is operating under overload.	Reduce load.
C	Circuit board (1PWB) is defective.	Replace the Servo Driver.
D	Encoder is defective.	Replace the Servomotor.

■ A.94

A.94: Parameter Setting Warning

Display and Outputs

Alarm Outputs			
Alarm Code Outputs			ALM Output
ALO1	ALO2	ALO3	
OFF	OFF	ON	ON

Note OFF: Output transistor is OFF (alarm state). ON: Output transistor is ON.

Status and Remedy for Alarm

When the command was sent — A, B

Cause		Remedy
A	A value outside the DeviceNet communications setting range was set.	Reset correctly.
B	• A parameter No. or data settings are incorrect at the Parameter Write Command. • Parameter No. settings are incorrect at the Parameter Read Command.	Reset correctly.

■ A.95

A.95: Command Warning

Display and Outputs

Alarm Outputs			
Alarm Code Outputs			ALM Output
ALO1	ALO2	ALO3	
ON	OFF	ON	ON

Note OFF: Output transistor is OFF (alarm state). ON: Output transistor is ON.

Status and Remedy for Alarm

When the command was sent — A, B, C

Cause		Remedy
A	Presently unable to receive the command that has been sent. • Illegal command • Command given during execution of another move command • Command given during servo OFF • Command given during alarm • Command given during emergency stop • Move command data error	Adjust conditions to match the command. Refer to the specifications for each command.
B	Unsupported command.	Do not send unsupported commands.
C	A move command data is abnormal.	Reset correctly.

■ A.96

A.96: Communications Warning

Display and Outputs

Alarm Outputs			
Alarm Code Outputs			ALM Output
ALO1	ALO2	ALO3	
OFF	ON	ON	ON

Note OFF: Output transistor is OFF (alarm state). ON: Output transistor is ON.

Status and Remedy for Alarm

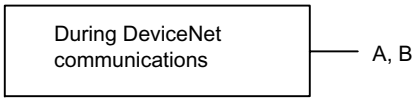

Cause		Remedy
A	Cable and connector contact is faulty.	Correct the connector wiring.
B	Malfunction due to noise.	Take noise prevention measures.

■ A.98

A.98: Main Power OFF

Display and Outputs

Alarm Outputs			
Alarm Code Outputs			ALM Output
ALO1	ALO2	ALO3	
OFF	OFF	OFF	ON

Note OFF: Output transistor is OFF (alarm state). ON: Output transistor is ON.

Status and Remedy for Alarm

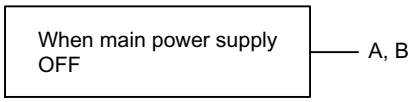

Cause		Remedy
A	Power supply cable and the connector contact is faulty.	Correct the connector wiring.
B	Power Supply Unit is defective.	Check the Power Supply Unit.

■ A.9A

A.9A: Positioning Timer Timeout

Display and Outputs

Alarm Outputs			
Alarm Code Outputs			ALM Output
ALO1	ALO2	ALO3	
OFF	ON	OFF	ON

Note OFF: Output transistor is OFF (alarm state). ON: Output transistor is ON.

Status and Remedy for Alarm

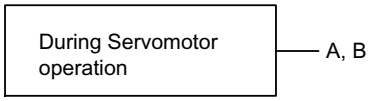

Cause		Remedy
A	Positioning Monitoring Time setting is too small.	Correct the Positioning Monitoring Time setting.
B	Positioning Loop Gain or Speed Loop Gain setting is too small.	Correct the Positioning Loop Gain or Speed Loop Gain setting.

■ A.B1

A.B1: Speed Command Input Reading Error

Display and Outputs

Alarm Outputs			
Alarm Code Outputs			ALM Output
ALO1	ALO2	ALO3	
OFF	OFF	OFF	OFF

Note OFF: Output transistor is OFF (alarm state).

Status and Remedy for Alarm

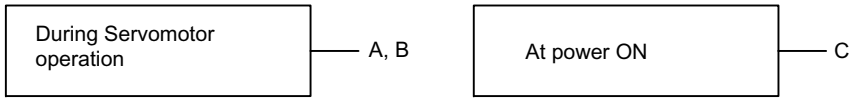

Cause		Remedy
A	Error in command read-in unit (A/D convertor, etc.)	Reset alarm and restart operation.
B	Command read-in unit is defective. (A/D convertor, etc.)	Replace the Servo Driver.
C	Circuit board (1PWB) is defective.	Replace the Servo Driver.

■ A.B2

A.B2: Torque Command Input Reading Error

Display and Outputs

Alarm Outputs			
Alarm Code Outputs			ALM Output
ALO1	ALO2	ALO3	
OFF	OFF	OFF	OFF

Note OFF: Output transistor is OFF (alarm state).

Status and Remedy for Alarm

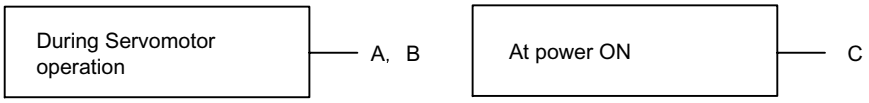

Cause		Remedy
A	Error in command read-in unit (A/D Converter, etc.).	Reset alarm and restart operation.
B	Command read-in unit faulty (A/D Converter, etc.).	Replace the Servo Driver.
C	Circuit board (1PWB) is defective.	Replace the Servo Driver.

■ A.B6

A.B6: Communications LSI Error

Display and Outputs

Alarm Outputs			
Alarm Code Outputs			ALM Output
ALO1	ALO2	ALO3	
OFF	OFF	OFF	OFF

Note OFF: Output transistor is OFF (alarm state).

Status and Remedy for Alarm

Cause		Remedy
A	The DeviceNet Unit is defective.	Replace the DeviceNet Unit.

■ A.C1

A.C1: Runaway Detected

Display and Outputs

Alarm Outputs			
Alarm Code Outputs			ALM Output
ALO1	ALO2	ALO3	
ON	OFF	ON	OFF

Note OFF: Output transistor is OFF (alarm state). ON: Output transistor is ON.

Status and Remedy for Alarm

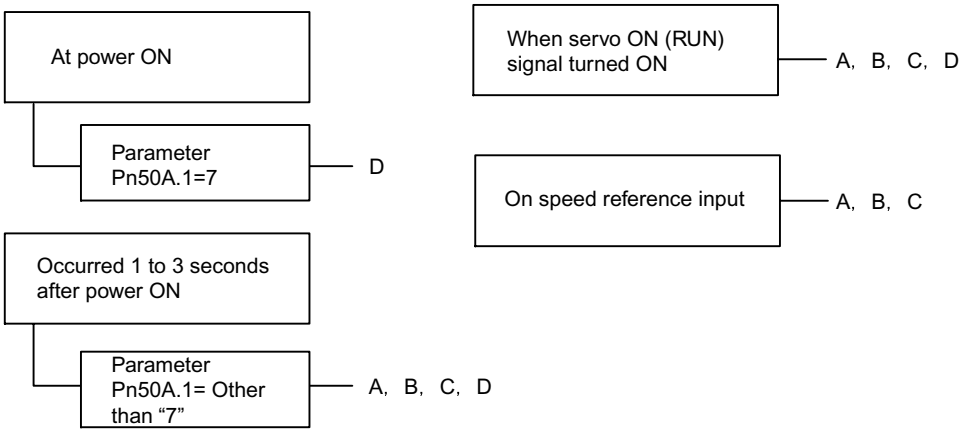

Cause		Remedy
A	Servomotor wiring incorrect or disconnected.	Check wiring and connectors at Servomotor.
B	Encoder wiring incorrect or disconnected.	Check wiring and connectors at encoder.
C	Encoder is defective.	Replace the Servomotor.
D	Circuit board (1PWB) is defective.	Replace the Servo Driver.

■ A.C6

A.C6: Fully-closed Encoder Phase-A, -B Disconnection

Display and Outputs

Alarm Outputs			
Alarm Code Outputs			ALM Output
ALO1	ALO2	ALO3	
ON	OFF	ON	OFF

Note OFF: Output transistor is OFF (alarm state). ON: Output transistor is ON.

Status and Remedy for Alarm

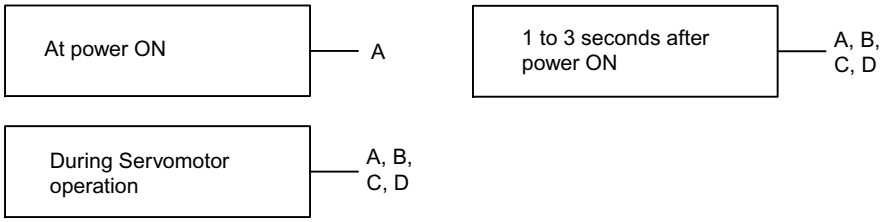

Cause		Remedy
A	Circuit board (1PWB) is defective.	Replace the Servo Driver.
B	Encoder wiring error or faulty contact.	Check the wiring and check that the connector is fully inserted on the encoder.
C	There is noise in the encoder wiring.	Separate the encoder wiring from the main circuit.
D	Encoder is defective.	Replace the Servomotor.

■ A.C7

A.C7: Fully-closed Encoder Phase-Z Disconnection

Display and Outputs

Alarm Outputs			
Alarm Code Outputs			ALM Output
ALO1	ALO2	ALO3	
ON	OFF	ON	OFF

Note OFF: Output transistor is OFF (alarm state). ON: Output transistor is ON.

Status and Remedy for Alarm

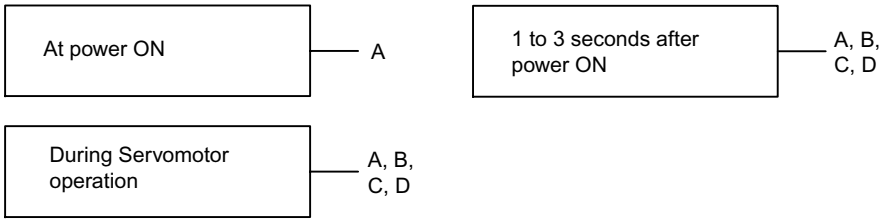

Cause		Remedy
A	Circuit board (1PWB) is defective.	Replace the Servo Driver.
B	Encoder wiring error or faulty contact.	Check the wiring and check that the connector is fully inserted on the encoder.
C	There is noise in the encoder wiring.	Separate the encoder wiring from the main circuit.
D	Encoder is defective.	Replace the Servomotor.

■ A.C8

A.C8: Multi-turn Data Error

Display and Outputs

Alarm Outputs			
Alarm Code Outputs			ALM Output
ALO1	ALO2	ALO3	
ON	OFF	ON	OFF

Note OFF: Output transistor is OFF (alarm state). ON: Output transistor is ON.

Status and Remedy for Alarm

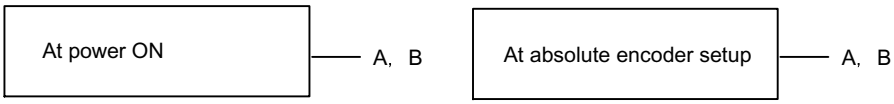

Cause		Remedy
A	Encoder is defective.	Replace the Servomotor.
B	The Servo Driver is defective.	Replace the Servo Driver.

■ A.C9

A.C9: Encoder Communications Error

Display and Outputs

Alarm Outputs			
Alarm Code Outputs			ALM Output
ALO1	ALO2	ALO3	
ON	OFF	ON	OFF

Note OFF: Output transistor is OFF (alarm state). ON: Output transistor is ON.

Status and Remedy for Alarm

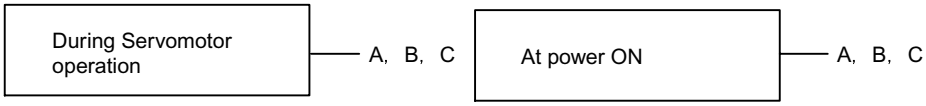

Cause		Remedy
A	Encoder wiring incorrect or disconnected.	Check wiring and connectors at encoder.
B	Encoder is defective.	Replace the Servomotor.
C	The Servo Driver is defective.	Replace the Servo Driver.

■ A.CA

A.CA: Encoder Parameter Error

Display and Outputs

Alarm Outputs			
Alarm Code Outputs			ALM Output
ALO1	ALO2	ALO3	
ON	OFF	ON	OFF

Note OFF: Output transistor is OFF (alarm state). ON: Output transistor is ON.

Status and Remedy for Alarm

Cause		Remedy
A	Encoder is defective.	Replace the Servomotor.
B	The Servo Driver is defective.	Replace the Servo Driver.

■ A.CB

A.CB: Encoder Data Error

Display and Outputs

Alarm Outputs			
Alarm Code Outputs			ALM Output
ALO1	ALO2	ALO3	
ON	OFF	ON	OFF

Note OFF: Output transistor is OFF (alarm state). ON: Output transistor is ON.

Status and Remedy for Alarm

Cause		Remedy
A	Encoder wiring incorrect or disconnected.	Check wiring and connectors at encoder.
B	Encoder is defective.	Replace the Servomotor.
C	The Servo Driver is defective.	Replace the Servo Driver.

■ A.CC

A.CC: Multi-turn Limit Discrepancy

Display and Outputs

Alarm Outputs			
Alarm Code Outputs			ALM Output
ALO1	ALO2	ALO3	
ON	OFF	ON	OFF

Note OFF: Output transistor is OFF (alarm state). ON: Output transistor is ON.

Status and Remedy for Alarm

Cause		Remedy
A	The setting of the Absolute Encoder Multi-turn Limit Setting (Pn205) parameter in the Servo Driver is incorrect.	Change parameter Pn205.
B	The Absolute Encoder Multi-turn Limit has not been set in the encoder.	Check that the Absolute Encoder Multi-turn Limit Setting (Pn205) parameter in the Servo Driver is correct, and then execute the absolute encoder multi-turn limit setting change (Fn013) when a Absolute Encoder Multi-turn Limit Disagreement (A.CC) occurs.

■ A.D0

A.D0: Deviation Counter Overflow

Display and Outputs

Alarm Outputs			
Alarm Code Outputs			ALM Output
ALO1	ALO2	ALO3	
ON	ON	OFF	OFF

Note OFF: Output transistor is OFF (alarm state). ON: Output transistor is ON.

Status and Remedy for Alarm

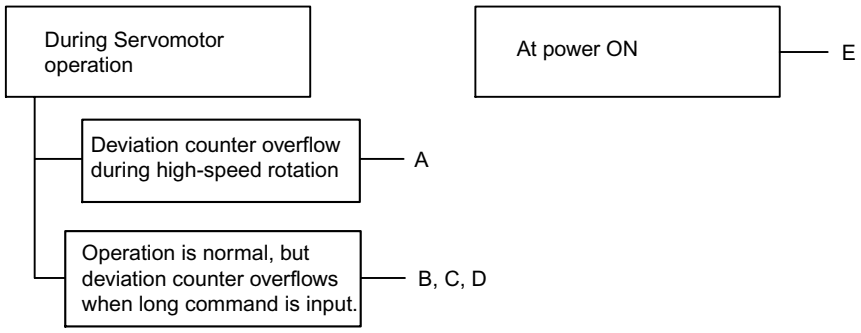

Cause		Remedy
A	Servomotor wiring is incorrect.	Check wiring at Servomotor.
B	The Servo Driver was not correctly adjusted.	Increase Speed Loop Gain (Pn100) and Position Loop Gain (Pn102).
C	Motor load was excessive.	Reduce load torque or inertia. If problem not corrected, replace with a larger capacity Servomotor.
D	Position command is too high.	• Reduce the acceleration/deceleration rate. • Change electronic gear ratio.
E	Circuit board (1PWB) is defective.	Replace the Servo Driver.

■ A.E0

A.E0: No DeviceNet Unit

Display and Outputs

Alarm Outputs			
Alarm Code Outputs			ALM Output
ALO1	ALO2	ALO3	
OFF	ON	ON	OFF

Note OFF: Output transistor is OFF (alarm state). ON: Output transistor is ON.

Status and Remedy for Alarm

Cause		Remedy
A	The DeviceNet Unit is defective.	Replace the DeviceNet Unit.

■ A.E1

A.E1: DeviceNet Unit Timeout

Display and Outputs

Alarm Outputs			
Alarm Code Outputs			ALM Output
ALO1	ALO2	ALO3	
OFF	ON	ON	OFF

Note OFF: Output transistor is OFF (alarm state). ON: Output transistor is ON.

Status and Remedy for Alarm

Cause		Remedy
A	The DeviceNet Unit is defective.	Replace the DeviceNet Unit.

■ A.E2

A.E2: WDC Error of DeviceNet Unit

Display and Outputs

Alarm Outputs			
Alarm Code Outputs			ALM Output
ALO1	ALO2	ALO3	
OFF	ON	ON	OFF

Note OFF: Output transistor is OFF (alarm state). ON: Output transistor is ON.

Status and Remedy for Alarm

Cause		Remedy
A	The DeviceNet Unit is defective.	Replace the DeviceNet Unit.

■ A.E6

A.E6: DeviceNet Duplicate MAC ID Error

Display and Outputs

Alarm Outputs			
Alarm Code Outputs			ALM Output
ALO1	ALO2	ALO3	
OFF	ON	ON	OFF

Note OFF: Output transistor is OFF (alarm state). ON: Output transistor is ON.

Status and Remedy for Alarm

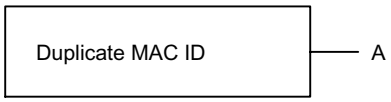

Cause		Remedy
A	Duplicate node address	Check node addresses of all Units on the DeviceNet network.

■ A.E7

A.E7: DeviceNet Unit Detection Error when the W-series Servo Driver power is ON

A.E7 occurs when the W-series Servo Driver is used without the DeviceNet Unit after it has been used with the DeviceNet Unit.

Display and Outputs

Alarm Outputs			
Alarm Code Outputs			ALM Output
ALO1	ALO2	ALO3	
OFF	ON	ON	OFF

Note OFF: Output transistor is OFF (alarm state). ON: Output transistor is ON.

Status and Remedy for Alarm

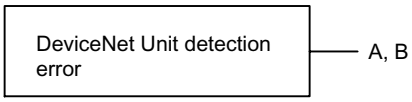

Cause		Remedy
A	The DeviceNet Unit is not mounted properly.	Check that DeviceNet Unit mounted correctly.
B	The DeviceNet Unit is not mounted.	Execute Fn014 from Parameter Unit.

■ A.E8

A.E8: Rotary Switch Setting Error on DeviceNet Unit Front Panel

Display and Outputs

Alarm Outputs			
Alarm Code Outputs			ALM Output
ALO1	ALO2	ALO3	
OFF	ON	ON	OFF

Note OFF: Output transistor is OFF (alarm state). ON: Output transistor is ON.

Status and Remedy for Alarm

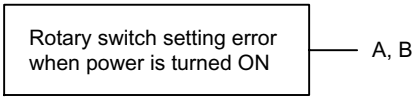

Cause		Remedy
A	Baud rate setting is incorrect.	Be sure the setting is between 0 and 2.
B	Node address setting is incorrect.	Be sure the setting is between 0 and 63.

■ A.E9

A.E9: DeviceNet Busoff Error

Display and Outputs

Alarm Outputs			
Alarm Code Outputs			ALM Output
ALO1	ALO2	ALO3	
OFF	ON	ON	OFF

Note OFF: Output transistor is OFF (alarm state). ON: Output transistor is ON.

Status and Remedy for Alarm

Cause		Remedy
A	There is no terminating resistance in the network.	Check that a terminator is mounted to both ends of the DeviceNet network.
B	There is noise in network wiring.	Separate the network wiring from the power supply circuit.
C	The baud rate is incorrect.	Check the communications settings of the rotary switches mounted on the front panel of the DeviceNet Unit.

■ A.EA

A.EA: Servo Driver System Error

Display and Outputs

Alarm Outputs			
Alarm Code Outputs			ALM Output
ALO1	ALO2	ALO3	
OFF	ON	ON	OFF

Note OFF: Output transistor is OFF (alarm state). ON: Output transistor is ON.

Status and Remedy for Alarm

Cause		Remedy
A	The Servo Driver is defective.	Replace the Servo Driver.

■ A.EB

A.EB: Servo Driver Initial Access Error

Display and Outputs

Alarm Outputs			
Alarm Code Outputs			ALM Output
ALO1	ALO2	ALO3	
OFF	ON	ON	OFF

Note OFF: Output transistor is OFF (alarm state). ON: Output transistor is ON.

Status and Remedy for Alarm

Cause		Remedy
A	The Servo Driver is defective.	Replace the Servo Driver.

■ A.EC

A.EC: WDC Error of Servo Driver

Display and Outputs

Alarm Outputs			
Alarm Code Outputs			ALM Output
ALO1	ALO2	ALO3	
OFF	ON	ON	OFF

Note OFF: Output transistor is OFF (alarm state). ON: Output transistor is ON.

Status and Remedy for Alarm

Cause		Remedy
A	The Servo Driver is defective.	Replace the Servo Driver.
B	DeviceNet communications interrupted.	Turn the power ON again.

■ A.ED

A.ED: Command Execution Incomplete Error

Display and Outputs

Alarm Outputs			
Alarm Code Outputs			ALM Output
ALO1	ALO2	ALO3	
OFF	ON	ON	OFF

Note OFF: Output transistor is OFF (alarm state). ON: Output transistor is ON.

Status and Remedy for Alarm

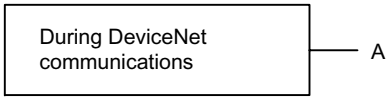

Cause		Remedy
A	Command was interrupted.	Do not connect a Parameter Unit or start communications with a personal computer during command execution.

■ A.F1

A.F1: Missing Phase Detected

Display and Outputs

Alarm Outputs			
Alarm Code Outputs			ALM Output
ALO1	ALO2	ALO3	
OFF	ON	OFF	OFF

Note OFF: Output transistor is OFF (alarm state). ON: Output transistor is ON.

Status and Remedy for Alarm

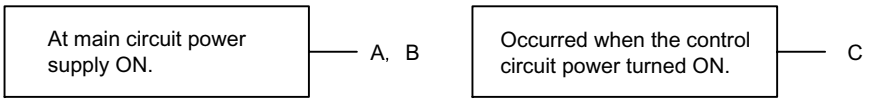

Cause		Remedy
A	One phase (L1, L2, or L3) of the main circuit power supply is disconnected.	• Check power supply. • Check wiring of the main circuit power supply. • Check QF, noise filter, magnetic contactor.
B	There is one phase where the line voltage is low.	Check power supply.
C	The Servo Driver is defective.	Replace the Servo Driver.

Note A and B tend to occur in a Servo Driver with a capacity of 500 W or higher.

■ CPF00

CPF00: Parameter Unit Transmission Error 1

This alarm is not stored in the alarm record function memory.

Display and Outputs

Alarm Outputs			
Alarm Code Outputs			ALM Output
ALO1	ALO2	ALO3	
Not specified			

Status and Remedy for Alarm

At power ON. Parameter Unit connected before Servo Driver power turned ON. — A, B, C, D

Parameter Unit connected to Servo Driver while power turned ON. — A, B, C, D

Cause		Remedy
A	Cable defective or poor contact between Parameter Unit and Servo Driver	• Check connector connections. • Replace cable.
B	Malfunction due to external noise	Separate Parameter Unit and cable from noise source.
C	Parameter Unit is defective.	Replace Parameter Unit.
D	The Servo Driver is defective.	Replace the Servo Driver.

■ CPF01

CPF01: Parameter Unit Transmission Error 2
This alarm is not stored in the alarm record function memory.

Display and Outputs

Alarm Outputs			
Alarm Code Outputs			ALM Output
ALO1	ALO2	ALO3	
Not specified			

Status and Remedy for Alarm

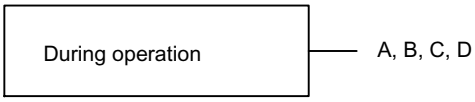

Cause		Remedy
A	Cable defective or poor contact between Parameter Unit and Servo Driver	• Check connector connections. • Replace cable.
B	Malfunction due to external noise	Separate Parameter Unit and cable from noise source.
C	Parameter Unit is defective.	Replace Parameter Unit.
D	The Servo Driver is defective.	Replace the Servo Driver.

■ A.- -

A.- -: Normal Operation
This is not an alarm display.

Display and Outputs

Alarm Outputs			
Alarm Code Outputs			ALM Output
ALO1	ALO2	ALO3	
OFF	OFF	OFF	ON

Note OFF: Output transistor is OFF (alarm state). ON: Output transistor is ON.

9.4 Error Diagnosis Due To Operating Status

Refer to the tables below to identify the cause of a problem which causes no alarm display and take the remedy described.

Turn OFF the servo system power supply before commencing the shaded procedures.

Table 9.3 Troubleshooting Table with No Alarm Display

Symptom	Cause	Inspection	Remedy
Servomotor does not start.	Power not connected	Check voltage between power supply terminals.	Correct the power circuit.
	Loose connection	Check terminals of connectors (CN1, CN2, CN4, and CN6).	Tighten any loose parts.
	Connectors (CN1, CN4, and CN6) external wiring incorrect	Check connectors (CN1, CN4, and CN6) external wiring.	Refer to connection diagram and correct wiring.
	Servomotor or encoder wiring disconnected	–	Reconnect wiring.
	Overloaded.	Run under no load.	Reduce load or replace with larger capacity Servomotor.
	Encoder type differs from parameter setting.	Check the type of encoder being used.	Set parameter Pn002.2 to the encoder type being used.
	POT and NOT inputs are turned OFF.	Refer to *8.3*.	Turn POT and NOT input signals ON.
	Software limit reached	Refer to *5.3.3*.	Operate the Servomotor within software limits.
Servomotor does not run.	Move commands have not been sent.	Check using DeviceNet communications or the DeviceNet monitor.	Send the move commands.
	Servo ON Command has not been sent.		Send Servo ON Command.
Servomotor moves instantaneously, then stops.	Servomotor or encoder wiring incorrect.	–	Refer to *chapter 4 Connectors* and correct wiring.
Servomotor speed unstable	Wiring connection to Servomotor is defective.	Check connection of phase-U, -V, and -W power lines and encoder connectors.	Tighten any loose terminals or connectors.
Servomotor vibrates at approximately 200 to 400 Hz.	Speed loop gain value is too high.	–	Reduce Speed Loop Gain (Pn100) preset value.
High rotation speed overshoot on starting and stopping	Speed loop gain value is too high.	–	Reduce Speed Loop Gain (Pn100) preset value. Increase Speed Loop Integration Constant (Pn101).
	Speed loop gain value too low compared to position loop gain value.	–	Increase Speed Loop Gain (Pn100) preset value. Reduce Speed Loop Integration Constant (Pn101).
Servomotor overheated	Ambient temperature is too high.	Measure Servomotor ambient temperature.	Reduce ambient temperature to 40 °C max.
	Servomotor surface is dirty.	Visual check	Clean dust and oil from motor surface.
	Overloaded	Run under no load.	Reduce load or replace with larger capacity Servomotor.

Table 9.3 Troubleshooting Table with No Alarm Display (cont'd)

Symptom	Cause	Inspection	Remedy
Abnormal noise	Mechanical mounting is incorrect.	Check if Servomotor mounting screws loose.	Tighten mounting screws.
		Check if coupling not centered.	Center coupling.
		Check if coupling unbalanced.	Balance coupling.
	Bearing is defective.	Check noise and vibration near bearing.	Remove the cause of problem and repair.
	Machine causing vibrations	Check for presence of foreign object, damage or deformation of movable parts of machine.	Remove the cause of problem and repair.

10

Appendix

This appendix provides list of DeviceNet object models, DeviceNet attributes, alarm/warning codes and error codes for message communications.

10.1 DeviceNet Object Model - 10-2

10.2 DeviceNet Attributes - 10-3

10.2.1 Identity Object (0x01) - 10-3
10.2.2 Message Router Object (0x02) - 10-4
10.2.3 DeviceNet Object (0x03) - 10-5
10.2.4 Assembly Object (0x04) - 10-6
10.2.5 Connection Object (0x05) - 10-7
10.2.6 DeviceNet Unit Parameter Object (0x64) - - - - - - - - - - - - - - - - - - - 10-9
10.2.7 Point Table Object (0x65) - 10-15
10.2.8 Servo Driver Parameter Object (0x66) - 10-20
10.2.9 Trace Setting Object (0x67) - 10-25
10.2.10 Trace Data Object (0x68) - 10-27

10.3 Alarm/Warning Codes and Error Codes for Message Communications- 10-28

10.3.1 Alarm Codes - 10-28
10.3.2 Warning Codes - 10-31
10.3.3 Error Codes for Message Communications - - - - - - - - - - - - - - - - - 10-32

10.1 DeviceNet Object Model

The following shows the list of the DeviceNet object models.

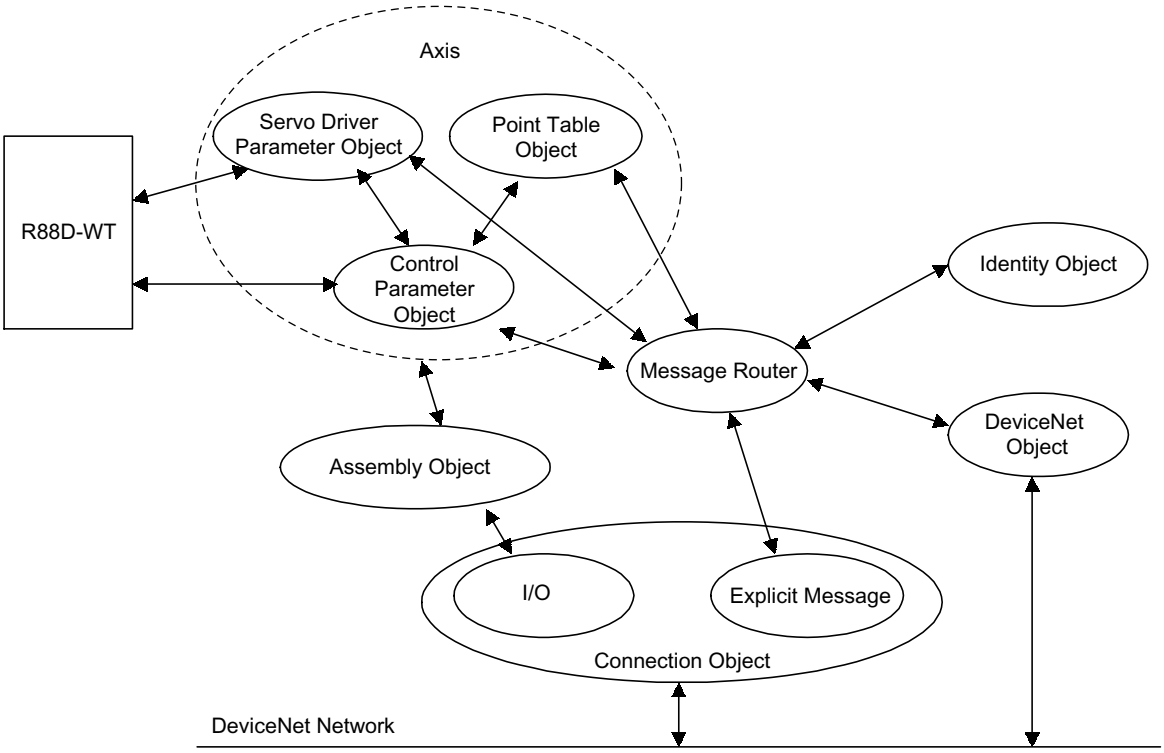

Fig. 10.1 DeviceNet Object Model

Object Class	Class Code	Instance No.	Function
Identity	0x01	1	Manages ID information, such as the device type, serial number, vendor code, and ID.
Message Router	0x02	1	Routes Explicit Messages to the appropriate object.
DeviceNet	0x03	1	Manages the physical connection to the DeviceNet, and performs Master/ Slave connection set and release demands.
Assembly	0x04	100	Manages I/O output messages for Slave to Master.
		101	Manages I/O input messages from Master to Slave.
Connection	0x05	1	Manages Explicit Messages attributes.
		2	Manages I/O message (polled I/O) attributes.
Control Parameter	0x64	1	Manages position controller engine parameters.
Point Table	0x65	1	Manages point table data.
Servo Parameter	0x66	1	Manages parameters within W-series Servo Driver.
Trace Setting	0x67	1	Manages data trace setting.
Trace Data	0x68	4	Manages trace data.

10.2 DeviceNet Attributes

This section lists the attributes that can be used in DeviceNet.

10.2.1 Identity Object (0x01)

Class and instances of the Identity Object (0x01) are shown below.

■ Class

- Attributes: None supported
- Services: None supported

■ Instances

Attributes (Instance #1: Explicit Message)

No	Access	Name	Data Type	Description	Value
1	Get	Vendor ID	UINT	Identification of each vendor by number	0x2F
2	Get	Device Type	UINT	Identification of general type of product	0x00
3	Get	Product Code	UINT	Identification of a particular product of an individual vendor	0x3C
4	Get	Revision	–	Revision of the item the Identity Object represents	1.2
5	Get	Status	WORD	Summary status of DeviceNet Unit	–
6	Get	Serial Number	UDINT	Serial number of DeviceNet Unit	Each unit
7	Get	Product Name	STRING	User readable identification	R88A-NCW152-DRT

Services

Service Code	Name	Description
0x05	Reset	Invokes the Reset Service for the DeviceNet Unit.
0x0E	Get_Attribute_Single	Returns the contents of the specified attribute.

Data Types

Data Type	Description	Size
USINT	Unsigned short integer	1 byte
UINT	Unsigned integer	2 bytes
UDINT	Unsigned double-precision integer	4 bytes
STRING	Character string (1 byte/character)	–
WORD	16-bit string	–

10.2.2 Message Router Object (0x02)

Class and instances of the Message Router Object (0x02) are shown below.

■ Class

- Attributes: None supported
- Services: None supported

■ Instances

- Attributes: None supported
- Services: None supported

10.2.3 DeviceNet Object (0x03)

Class and instances of the DeviceNet Object (0x03) are shown below.

■ Class

- Attributes: None supported
- Services: None supported

■ Instances

Attributes (Instance #1: Explicit Message)

No	Access	Name	Data Type	Description	Value
1	Get	MAC ID	USINT	Node address	0 to 63
2	Get	Baud Rate	USINT	Baud rate	0 to 2
3	Get	BOI	BOOL	Busoff interrupt	0x00
4	Get	Busoff Counter	USINT	Number of times CAN went to the Busoff state	0 to 255
5	Get	Allocation Information	Structure including byte and USINT	–	–
–	–	Allocation Choice Byte	Byte	Connection type for Master/Slave connection	–
–	–	Master's MAC ID	USINT	Node address of Master	0 to 63

Services

Service Code	Name	Description
0x0E	Get_Attribute_Single	Returns the contents of the specified attribute.
0x4B	Allocate_Master/Slave_Connection_Set	Requests the use of the Predefined Master/Slave Connection Set.
0x4C	Release_Master/Slave_Connection_Set	Opens the Master/Slave connection.

Data Types

Data Type	Description	Size
BOOL	Boolean	1 bit
USINT	Unsigned short integer	1 byte
BYTE	8-bit string	–

10.2.4 Assembly Object (0x04)

Class and instances of the Assembly Object (0x04) are shown below.

■ Class

- Attributes: None supported
- Services: None supported

■ Instances

Attributes (Instance #100)

No	Access	Name	Data Type	Description	Value
3	Get/Set	Data	Array	Output data	–

Attributes (Instance #101)

No	Access	Name	Data Type	Description	Value
3	Get/Set	Data	Array	Input data	–

Services

Service Code	Name	Description
0x0E	Get_Attribute_Single	Returns the contents of the specified attribute.

10.2.5 Connection Object (0x05)

Class and instances of the Connection Object (0x05) are shown below.

■ Class

- Attributes: None supported
- Services: None supported

■ Instances

Attributes (Instance #1: Explicit Message)

No	Access	Name	Data Type	Description	Value
1	Get	State	USINT	Defines the state of the object.	–
2	Get	Instance_type	USINT	Defines either I/O or messaging connection.	0x0000
3	Get	TransportClass_ trigger	Byte	Defines behavior of the connection.	0x83
4	Get/Set	Produced_ Connection_ID	UINT	Placed in CAN Identifier Field when the connection transmits	–
5	Get/Set	Consumed_ Connection_ID	UINT	CAN Identifier Field value that denotes message to be received	–
6	Get/Set	Initial_Comm_ Characteristics	USINT	Defines the message group across which productions and consumption associated with this connection occur.	0x21
7	Get	Produced_ Connection_Size	UINT	Maximum number of bytes transmitted across this connection	0x00FF
8	Get	Consumed_ Connection_Size	UINT	Maximum number of bytes received across this connection	0x00FF
9	Get/Set	Expected_ Packet_Rate	UINT	Defines timing associated with this connection.	–
12	Get	Watchdog_ Timeout_Action	USINT	Defines how to handle timeouts.	0x03
13	Get	Produced_ Connection_ Path_Length	UINT	Number of bytes in the produced connection path attribute	0x0000
14	Get	Produced_ Connection_Path	USINT Array	Specifies the application object whose data is to be sent by this connection object.	–
15	Get	Consumed_ Connection_ Path_Length	UINT	Number of bytes in the consumed connection path attribute	0x0000
16	Get	Consumed_ Connection_Path	USINT Array	Specifies the application object that are to receive the data received by this connection object.	–

Attributes (Instance #2: Polled I/O)

No	Access	Name	Data Type	Description	Value
1	Get	State	USINT	Defines the state of the object.	–
2	Get	Instance_type	USINT	Defines either I/O or messaging connection.	0x01
3	Get	TransportClass_ trigger	Byte	Defines behavior of the connection.	0x83
4	Get/Set	Produced_ Connection_ID	UINT	Placed in CAN Identifier Field when the connection transmits	–
5	Get/Set	Consumed_ Connection_ID	UINT	CAN Identifier Field value that denotes message to be received	–
6	Get/Set	Initial_Comm_ Characteristics	USINT	Defines the message group across which productions and consumption associated with this connection occur.	0x01
7	Get	Produced_ Connection_Size	UINT	Maximum number of bytes transmitted across this connection	0x0008
8	Get	Consumed_ Connection_Size	UINT	Maximum number of bytes received across this connection	0x0008
9	Get/Set	Expected_ Packet_Rate	UINT	Defines timing associated with this connection.	–
12	Get	Watchdog_ Timeout_Action	USINT	Defines how to handle timeouts.	0x00
13	Get	Produced_ Connection_ Path_Length	UINT	Number of bytes in the produced connection path attribute	0x0006
14	Get	Produced_ Connection_Path	USINT Array	Specifies the application object whose data is to be sent by this connection object.	20_04_ 24_64_ 30_03_
15	Get	Consumed_ Connection_ Path_Length	UINT	Number of bytes in the consumed connection path attribute	0x0006
16	Get	Consumed_ Connection_Path	USINT Array	Specifies the application object that are to receive the data received by this connection object.	20_04_ 24_65_ 30_03_

Services

Service Code	Name	Description
0x0E	Get_Attribute_Single	Returns the contents of the specified attribute.
0x10	Set_Attribute_Single	Modifies the contents of the specified attribute.

Data Types

Data Type	Description	Size
USINT	Unsigned short integer	1 byte
UINT	Unsigned integer	2 bytes
BYTE	8-bit string	–

10.2.6 DeviceNet Unit Parameter Object (0x64)

Class and instances of the DeviceNet Unit Parameter Object (0x64) are shown below.

■ Class

- Attributes: None supported
- Services: None supported

■ Instances

Attributes (Instance #1, Explicit Message)

No	Access	Name	Data Type	Description	Setting Range	Default Setting
10	Get/Set	Origin Search Mode	UINT	Sets the origin search type.	0 to 6	0
11	Get/Set	Origin Search Function Selection	UINT	Sets the function selection for origin search. Bit 0: Direction of origin search Bit 1: Origin proximity input signal setting Bit 2: Origin input signal setting	0 to 7	1
12	Get/Set	Origin Search High Speed	DINT	Sets the high speed for origin search. Unit: × 1000 steps/min	1 to 240,000	10,000
13	Get/Set	Origin Search Proximity Speed	DINT	Sets the proximity speed for origin search. Unit: × 1000 steps/min	1 to 240,000	1,000
14	Get/Set	Origin Search Compensation Speed	DINT	Sets the compensation speed for origin search. Unit: × 1000 steps/min	1 to 240,000	500
15	Get/Set	Origin Compensation Value	DINT	Sets the origin compensation data. Unit: Steps	0 to 99,999,999	0
16	Get/Set	Zero Position Output Width	DINT	Sets the output width of the origin. Unit: Steps	0 to 32,767	100
17	Get/Set	Absolute Position Setting	DINT	Sets the offset from the encoder coordinate system. Unit: Steps	-99,999,999 to 99,999,999	0
18	Get/Set	Origin Search Acceleration/ Deceleration Time	DINT	Sets the acceleration/deceleration time for origin search. Unit: ms	1 to 10,000	100
30	Get/Set	Electronic Gear Ratio G1 (Numerator)	DINT	Sets the numerator of electronic gear (G1).	1 to 10,000,000	1
31	Get/Set	Electronic Gear Ratio G2 (Denominator)	DINT	Sets the denominator of electronic gear (G2).	1 to 10,000,000	1
32	Get/Set	Coordinate Type	BOOL	Sets the coordinate type. 0: Linear axis; 1: Rotary axis	0, 1	0
33	Get/Set	Command Unit/R	DINT	Sets the command unit per one machine rotation for rotary axis. Unit: Steps	1 to 1,500,000	360,000
34	Get/Set	Backlash Compensation Value	UINT	Sets the compensated value for backlash.	0 to 32,767	0

(cont'd)

No	Access	Name	Data Type	Description	Setting Range	Default Setting
35	Get/Set	Backlash Compensation Direction	UINT	Sets the direction for backlash compensation.	0, 1	0
36	Get/Set	Positive Software Limit	DINT	Sets the limit position for positive direction. Unit: Steps	-99,999,999 to 99,999,999	99,999,999
37	Get/Set	Negative Software Limit	DINT	Sets the limit position for negative direction. Unit: Steps	-99,999,999 to 99,999,999	-99,999,999
38	Get/Set	Function Selection	UINT	Sets the mechanical function. • Bit 0 0: Software Limit is disabled. 1: Software Limit is enabled. • Bit 1 0: Backlash Compensation Value is disabled. 1: Backlash Compensation Value is enabled.	0 to 3	0
39	Get/Set	Limit Input Signal Function Selection	UINT	Sets whether the limit input is used.	0 to 3	1
40	Get/Set	Limit Input Action Selection	UINT	Sets the action when using limit input.	0, 1	1
41	Get/Set	Emergency Stop Function Selection	UINT	Sets the polarity and other settings for the emergency stop signal.	0 to 3	1
42	Get/Set	Emergency Stop Action	UINT	Sets the action when emergency stop.	0	0
51	Get/Set	Speed	DINT	Sets the speed command value. Unit: × 1000 steps/min	1 to 240,000	24,000
52	Get/Set	Acceleration Time	UINT	Sets the acceleration time for positioning. Unit: ms	1 to 10,000	100
53	Get/Set	Deceleration Time	UINT	Sets the deceleration time for positioning. Unit: ms	1 to 10,000	100
54	Get/Set	Switch Speed	DINT	Sets the switch speed for positioning second acceleration/deceleration time. Unit: × 1000 steps/min	1 to 240,000	12,000
55	Get/Set	Second Acceleration/Deceleration Time	UINT	Sets the acceleration/deceleration time of second acceleration/deceleration for positioning. Unit: ms	1 to 10,000	200
56	Get/Set	Acceleration/ Deceleration Type	UINT	Sets acceleration/deceleration type at positioning. 0: None 1: Single-step linear 2: Double-step linear 3: Asymmetric	0 to 3	0
57	Get/Set	Interrupt Feeding Speed	DINT	Sets the interrupt feeding speed. Unit: × 1000 steps/min	1 to 240,000	24,000
58	Get/Set	Filter Selection	UINT	Sets the type of filter. 0: None 1: Exponential 2: Exponential with bias 3: Moving Average	0 to 3	0

(cont'd)

No	Access	Name	Data Type	Description	Setting Range	Default Setting
59	Get/Set	JOG Unit Selection	UINT	Sets the command unit for the speed setting for JOG.	0, 1	0
60	Get/Set	JOG Speed	DINT	Sets the JOG speed. Unit: × 1000 steps/min	1 to 240,000	24,000
61	Get/Set	JOG Acceleration Time	UINT	Sets the JOG acceleration time. Unit: ms	1 to 10,000	100
62	Get/Set	JOG Deceleration Time	UINT	Sets the JOG deceleration time. Unit: ms	1 to 10,000	100
63	Get/Set	JOG Switch Speed	DINT	Sets the switch speed for second acceleration/deceleration for the JOG. Unit: × 1000 steps/min	1 to 240,000	12,000
64	Get/Set	JOG Second Acceleration/Deceleration Time	UINT	Sets the acceleration/deceleration time for the second acceleration/deceleration for the JOG. Unit: ms	1 to 10,000	200
65	Get/Set	JOG Acceleration/ Deceleration Type	UINT	Sets the JOG acceleration/deceleration type. 0: None 1: Single-step linear 2: Double-step linear 3: Asymmetric	0 to 3	0
70	Get/Set	Time Constant for Exponential Curve	UINT	Sets the time constant of exponential acceleration/deceleration. Unit: ms	4 to 1,000	25
71	Get/Set	Bias Speed	DINT	Sets the bias speed of exponential acceleration/deceleration with bias. Unit: × 1000 steps/min	0 to 240,000	0
72	Get/Set	Time Constant of Moving Average	UINT	Sets the time constant of moving average. Unit: ms	4 to 1,000	25
73	Get/Set	Maximum Speed	DINT	Sets the maximum speed. Unit: × 1000 steps/min	1 to 240,000	24,000
74	Get/Set	Step Distance1	DINT	Sets step distance 1 for STEP operation. Unit: Steps	0 to 99,999,999	1
75	Get/Set	Step Distance2	DINT	Sets step distance 2 for STEP operation. Unit: Steps	0 to 99,999,999	10
76	Get/Set	Step Distance3	DINT	Sets step distance 3 for STEP operation. Unit: Steps	0 to 99,999,999	100
77	Get/Set	Step Distance4	DINT	Sets step distance 4 for STEP operation. Unit: Steps	0 to 99,999,999	1,000
90	Get/Set	Positioning Completion Range	UINT	Sets the positioning completion range. Unit: Steps	0 to 10,000	5
91	Get/Set	Positioning Monitor Time	UINT	Sets the positioning monitoring time. Unit: ms	0 to 65535	0
92	Get/Set	Positioning Near Range	UINT	Sets the width for the positioning proximity signal. Unit: Steps	0 to 32767	10
93	Get/Set	Direction	BOOL	Sets the direction of rotation for station positioning.	0, 1	0

(cont'd)

No	Access	Name	Data Type	Description	Setting Range	Default Setting
94	Get/Set	Interrupt Feeding Positioning Speed	DINT	Sets the positioning speed for interrupt feeding. Unit: × 1000 steps/min	1 to 240,000	24,000
95	Get/Set	Interrupt Feeding Distance	DINT	Sets the amount of interrupt feeding. Unit: Steps	-99,999,999 to 99,999,999	0
96	Get/Set	Interrupt Feeding Function Selection	UINT	Sets the polarity of interrupt input signals.	0, 1	0
100	Get/Set	Station	UINT	Sets the number of stations.	1 to 32,767	1
111	Get/Set	Speed Switch Point	UINT	Sets the number of speed switching points.	0 to 16	0
112	Get/Set	Multi-speed Positioning Initial Speed	DINT	Sets the initial speed for multi-speed. Unit: × 1000 steps/min	1 to 240,000	24,000
113	Get/Set	Position 1 for Multi-speed	DINT	Sets speed-switching position 1 for multi-speed. Unit: Steps	0 to 99,999,999	0
114	Get/Set	Position 2 for Multi-speed	DINT	Sets speed–switching position 2 for multi-speed. Unit: Steps	0 to 99,999,999	0
115	Get/Set	Position 3 for Multi-speed	DINT	Sets speed-switching position 3 for multi-speed. Unit: Steps	0 to 99,999,999	0
116	Get/Set	Position 4 for Multi-speed	DINT	Sets speed-switching position 4 for multi-speed. Unit: Steps	0 to 99,999,999	0
117	Get/Set	Position 5 for Multi-speed	DINT	Sets speed-switching position 5 for multi-speed. Unit: Steps	0 to 99,999,999	0
118	Get/Set	Position 6 for Multi-speed	DINT	Sets speed-switching position 6 for multi-speed. Unit: Steps	0 to 99,999,999	0
119	Get/Set	Position 7 for Multi-speed	DINT	Sets speed-switching position 7 for multi-speed. Unit: Steps	0 to 99,999,999	0
120	Get/Set	Position 8 for Multi-speed	DINT	Sets speed-switching position 8 for multi-speed. Unit: Steps	0 to 99,999,999	0
121	Get/Set	Position 9 for Multi-speed	DINT	Sets speed-switching position 9 for multi-speed. Unit: Steps	0 to 99,999,999	0
122	Get/Set	Position 10 for Multi-speed	DINT	Sets speed-switching position 10 for multi-speed. Unit: Steps	0 to 99,999,999	0
123	Get/Set	Position 11 for Multi-speed	DINT	Sets speed–switching position 11 for multi–speed. Unit: Steps	0 to 99,999,999	0
124	Get/Set	Position 12 for Multi-speed	DINT	Sets speed-switching position 12 for multi-speed. Unit: Steps	0 to 99,999,999	0
125	Get/Set	Position 13 for Multi-speed	DINT	Sets speed-switching position 13 for multi-speed. Unit: Steps	0 to 99,999,999	0

(cont'd)

No	Access	Name	Data Type	Description	Setting Range	Default Setting
126	Get/Set	Position 14 for Multi-speed	DINT	Sets speed-switching position 14 for multi-speed. Unit: Steps	0 to 99,999,999	0
127	Get/Set	Position 15 for Multi-speed	DINT	Sets speed-switching position 15 for multi-speed. Unit: Steps	0 to 99,999,999	0
128	Get/Set	Position 16 for Multi-speed	DINT	Sets speed-switching position 16 for multi-speed. Unit: Steps	0 to 99,999,999	0
129	Get/Set	Speed 1 for Multi-speed	DINT	Sets speed 1 for multi-speed. Unit: × 1000 steps/min	1 to 240,000	24,000
130	Get/Set	Speed 2 for Multi-speed	DINT	Sets speed 2 for multi-speed. Unit: × 1000 steps/min	1 to 240,000	24,000
131	Get/Set	Speed 3 for Multi-speed	DINT	Sets speed 3 for multi-speed. Unit: ×1000 steps/min	1 to 240,000	24,000
132	Get/Set	Speed 4 for Multi-speed	DINT	Sets speed 4 for multi-speed. Unit: × 1000 steps/min	1 to 240,000	24,000
133	Get/Set	Speed 5 for Multi-speed	DINT	Sets speed 5 for multi-speed. Unit: × 1000 steps/min	1 to 240,000	24,000
134	Get/Set	Speed 6 for Multi-speed	DINT	Sets speed 6 for multi-speed. Unit: × 1000 steps/min	1 to 240,000	24,000
135	Get/Set	Speed 7 for Multi-speed	DINT	Sets speed 7 for multi-speed. Unit: × 1000 steps/min	1 to 240,000	24,000
136	Get/Set	Speed 8 for Multi-speed	DINT	Sets speed 8 for multi-speed. Unit: × 1000 steps/min	1 to 240,000	24,000
137	Get/Set	Speed 9 for Multi-speed	DINT	Sets speed 9 for multi-speed. Unit: × 1000 steps/min	0 to 99,999,999	24,000
138	Get/Set	Speed 10 for Multi-speed	DINT	Sets speed 10 for multi-speed. Unit: × 1000 steps/min	0 to 99,999,999	24,000
139	Get/Set	Speed 11 for Multi-speed	DINT	Sets speed 11 for multi-speed. Unit: × 1000 steps/min	0 to 99,999,999	24,000
140	Get/Set	Speed 12 for Multi-speed	DINT	Sets speed 12 for multi-speed. Unit: × 1000 steps/min	0 to 99,999,999	24,000
141	Get/Set	Speed 13 for Multi-speed	DINT	Sets speed 13 for multi-speed. Unit: × 1000 steps/min	0 to 99,999,999	24,000
142	Get/Set	Speed 14 for Multi-speed	DINT	Sets speed 14 for multi-speed. Unit: × 1000 steps/min	0 to 99,999,999	24,000
143	Get/Set	Speed 15 for Multi-speed	DINT	Sets speed 15 for multi-speed. Unit: × 1000 steps/min	0 to 99,999,999	24,000
144	Get/Set	Speed 16 for Multi-speed	DINT	Sets speed 16 for multi-speed. Unit: × 1000 steps/min	0 to 99,999,999	24,000
160	Get/Set	Notch Signal Position Designation	USINT	Sets notch signal output position. 0: Specifies absolute position. 1: Specifies relative position.	0, 1	0

(cont'd)

No	Access	Name	Data Type	Description	Setting Range	Default Setting
161	Get/Set	Notch Signal	UINT	Sets notch signal output. • Bit 0: Notch output 1 0: Normally OFF, ON when passing 1: Normally ON, OFF when passing • Bit 1: Notch output 2 0: Normally OFF, ON when passing 1: Normally ON, OFF when passing	0 to 3	0
162	Get/Set	Negative Direction Notch 1	DINT	Sets negative direction notch 1. Unit: Steps	-99,999,999 to 99,999,999	0
163	Get/Set	Positive Direction Notch 1	DINT	Sets positive direction notch 1. Unit: Steps	-99,999,999 to 99,999,999	0
164	Get/Set	Negative Direction Notch 2	DINT	Sets negative direction notch 2. Unit: Steps	-99,999,999 to 99,999,999	0
165	Get/Set	Positive Direction Notch 2	DINT	Sets positive direction notch 2. Unit: Steps	-99,999,999 to 99,999,999	0

Services

Service Code	Name	Description
0x0E	Get_Attribute_Single	Returns the specified attribute.
0x10	Set_Attribute_Single	Modifies the specified attribute.

Data Types

Data Type	Description	Size
BOOL	Boolean	1 bit
DINT	Double-precision integer	4 bytes
UINT	Unsigned integer	2 bytes

10.2.7 Point Table Object (0x65)

Class and instances of the Point Table Object (0x65) are shown below.

■ Class

- Attributes: None supported
- Services: None supported

■ Instances

Attributes (Instance #1: Explicit Message)

No.	Access	Name	Data Type	Description	Setting Range	Default Setting
50	Get/Set	Position_1	DINT	Target position 1 Unit: Steps	-99,999,999 to 99,999,999	0
51	Get/Set	Position_2	DINT	Target position 2 Unit: Steps	-99,999,999 to 99,999,999	0
52	Get/Set	Position_3	DINT	Target position 3 Unit: Steps	-99,999,999 to 99,999,999	0
53	Get/Set	Position_4	DINT	Target position 4 Unit: Steps	-99,999,999 to 99,999,999	0
54	Get/Set	Position_5	DINT	Target position 5 Unit: Steps	-99,999,999 to 99,999,999	0
55	Get/Set	Position_6	DINT	Target position 6 Unit: Steps	-99,999,999 to 99,999,999	0
56	Get/Set	Position_7	DINT	Target position 7 Unit: Steps	-99,999,999 to 99,999,999	0
57	Get/Set	Position_8	DINT	Target position 8 Unit: Steps	-99,999,999 to 99,999,999	0
58	Get/Set	Position_9	DINT	Target position 9 Unit: Steps	-99,999,999 to 99,999,999	0
59	Get/Set	Position_10	DINT	Target position 10 Unit: Steps	-99,999,999 to 99,999,999	0
60	Get/Set	Position_11	DINT	Target position 11 Unit: Steps	-99,999,999 to 99,999,999	0
61	Get/Set	Position_12	DINT	Target position 12 Unit: Steps	-99,999,999 to 99,999,999	0
62	Get/Set	Position_13	DINT	Target position 13 Unit: Steps	-99,999,999 to 99,999,999	0
63	Get/Set	Position_14	DINT	Target position 14 Unit: Steps	-99,999,999 to 99,999,999	0
64	Get/Set	Position_15	DINT	Target position 15 Unit: Steps	-99,999,999 to 99,999,999	0
65	Get/Set	Position_16	DINT	Target position 16 Unit: Steps	-99,999,999 to 99,999,999	0
66	Get/Set	Position_17	DINT	Target position 17 Unit: Steps	-99,999,999 to 99,999,999	0

(cont'd)

No.	Access	Name	Data Type	Description	Setting Range	Default Setting
67	Get/Set	Position_18	DINT	Target position 18 Unit: Steps	-99,999,999 to 99,999,999	0
68	Get/Set	Position_19	DINT	Target position 19 Unit: Steps	-99,999,999 to 99,999,999	0
69	Get/Set	Position_20	DINT	Target position 20 Unit: Steps	-99,999,999 to 99,999,999	0
70	Get/Set	Position_21	DINT	Target position 21 Unit: Steps	-99,999,999 to 99,999,999	0
71	Get/Set	Position_22	DINT	Target position 22 Unit: Steps	-99,999,999 to 99,999,999	0
72	Get/Set	Position_23	DINT	Target position 23 Unit: Steps	-99,999,999 to 99,999,999	0
73	Get/Set	Position_24	DINT	Target position 24 Unit: Steps	-99,999,999 to 99,999,999	0
74	Get/Set	Position_25	DINT	Target position 25 Unit: Steps	-99,999,999 to 99,999,999	0
75	Get/Set	Position_26	DINT	Target position 26 Unit: Steps	-99,999,999 to 99,999,999	0
76	Get/Set	Position_27	DINT	Target position 27 Unit: Steps	-99,999,999 to 99,999,999	0
77	Get/Set	Position_28	DINT	Target position 28 Unit: Steps	-99,999,999 to 99,999,999	0
78	Get/Set	Position_29	DINT	Target position 29 Unit: Steps	-99,999,999 to 99,999,999	0
79	Get/Set	Position_30	DINT	Target position 30 Unit: Steps	-99,999,999 to 99,999,999	0
80	Get/Set	Position_31	DINT	Target position 31 Unit: Steps	-99,999,999 to 99,999,999	0
81	Get/Set	Position_32	DINT	Target position 32 Unit: Steps	-99,999,999 to 99,999,999	0
82	Get/Set	Position_33	DINT	Target position 33 Unit: Steps	-99,999,999 to 99,999,999	0
83	Get/Set	Position_34	DINT	Target position 34 Unit: Steps	-99,999,999 to 99,999,999	0
84	Get/Set	Position_35	DINT	Target position 35 Unit: Steps	-99,999,999 to 99,999,999	0
85	Get/Set	Position_36	DINT	Target position 36 Unit: Steps	-99,999,999 to 99,999,999	0
86	Get/Set	Position_37	DINT	Target position 37 Unit: Steps	-99,999,999 to 99,999,999	0
87	Get/Set	Position_38	DINT	Target position 38 Unit: Steps	-99,999,999 to 99,999,999	0
88	Get/Set	Position_39	DINT	Target position 39 Unit: Steps	-99,999,999 to 99,999,999	0
89	Get/Set	Position_40	DINT	Target position 40 Unit: Steps	-99,999,999 to 99,999,999	0
90	Get/Set	Position_41	DINT	Target position 41 Unit: Steps	-99,999,999 to 99,999,999	0

(cont'd)

No.	Access	Name	Data Type	Description	Setting Range	Default Setting
91	Get/Set	Position_42	DINT	Target position 42 Unit: Steps	-99,999,999 to 99,999,999	0
92	Get/Set	Position_43	DINT	Target position 43 Unit: Steps	-99,999,999 to 99,999,999	0
93	Get/Set	Position_44	DINT	Target position 44 Unit: Steps	-99,999,999 to 99,999,999	0
94	Get/Set	Position_45	DINT	Target position 45 Unit: Steps	-99,999,999 to 99,999,999	0
95	Get/Set	Position_46	DINT	Target position 46 Unit: Steps	-99,999,999 to 99,999,999	0
96	Get/Set	Position_47	DINT	Target position 47 Unit: Steps	-99,999,999 to 99,999,999	0
97	Get/Set	Position_48	DINT	Target position 48 Unit: Steps	-99,999,999 to 99,999,999	0
98	Get/Set	Position_49	DINT	Target position 49 Unit: Steps	-99,999,999 to 99,999,999	0
99	Get/Set	Position_50	DINT	Target position 50 Unit: Steps	-99,999,999 to 99,999,999	0
150	Get/Set	Speed_1	DINT	Target speed 1 Unit: × 1000 steps/min	1 to 240,000	24,000
151	Get/Set	Speed_2	DINT	Target speed 2 Unit: × 1000 steps/min	1 to 240,000	24,000
152	Get/Set	Speed_3	DINT	Target speed 3 Unit: × 1000 steps/min	1 to 240,000	24,000
153	Get/Set	Speed_4	DINT	Target speed 4 Unit: × 1000 steps/min	1 to 240,000	24,000
154	Get/Set	Speed_5	DINT	Target speed 5 Unit: × 1000 steps/min	1 to 240,000	24,000
155	Get/Set	Speed_6	DINT	Target speed 6 Unit: × 1000 steps/min	1 to 240,000	24,000
156	Get/Set	Speed_7	DINT	Target speed 7 Unit: × 1000 steps/min	1 to 240,000	24,000
157	Get/Set	Speed_8	DINT	Target speed 8 Unit: × 1000 steps/min	1 to 240,000	24,000
158	Get/Set	Speed_9	DINT	Target speed 9 Unit: × 1000 steps/min	1 to 240,000	24,000
159	Get/Set	Speed_10	DINT	Target speed 10 Unit: × 1000 steps/min	1 to 240,000	24,000
160	Get/Set	Speed_11	DINT	Target speed 11 Unit: × 1000 steps/min	1 to 240,000	24,000
161	Get/Set	Speed_12	DINT	Target speed 12 Unit: × 1000 steps/min	1 to 240,000	24,000
162	Get/Set	Speed_13	DINT	Target speed 13 Unit: × 1000 steps/min	1 to 240,000	24,000
163	Get/Set	Speed_14	DINT	Target speed 14 Unit: × 1000 steps/min	1 to 240,000	24,000

(cont'd)

No.	Access	Name	Data Type	Description	Setting Range	Default Setting
164	Get/Set	Speed_15	DINT	Target speed 15 Unit: × 1000 steps/min	1 to 240,000	24,000
165	Get/Set	Speed_16	DINT	Target speed 16 Unit: × 1000 steps/min	1 to 240,000	24,000
166	Get/Set	Speed_17	DINT	Target speed 17 Unit: × 1000 steps/min	1 to 240,000	24,000
167	Get/Set	Speed_18	DINT	Target speed 18 Unit: × 1000 steps/min	1 to 240,000	24,000
168	Get/Set	Speed_19	DINT	Target speed 19 Unit: × 1000 steps/min	1 to 240,000	24,000
169	Get/Set	Speed_20	DINT	Target speed 20 Unit: × 1000 steps/min	1 to 240,000	24,000
170	Get/Set	Speed_21	DINT	Target speed 21 Unit: × 1000 steps/min	1 to 240,000	24,000
171	Get/Set	Speed_22	DINT	Target speed 22 Unit: × 1000 steps/min	1 to 240,000	24,000
172	Get/Set	Speed_23	DINT	Target speed 23 Unit: × 1000 steps/min	1 to 240,000	24,000
173	Get/Set	Speed_24	DINT	Target speed 24 Unit: × 1000 steps/min	1 to 240,000	24,000
174	Get/Set	Speed_25	DINT	Target speed 25 Unit: × 1000 steps/min	1 to 240,000	24,000
175	Get/Set	Speed_26	DINT	Target speed 26 Unit:× 1000 steps/min	1 to 240,000	24,000
176	Get/Set	Speed_27	DINT	Target speed 27 Unit: × 1000 steps/min	1 to 240,000	24,000
177	Get/Set	Speed_28	DINT	Target speed 28 Unit: × 1000 steps/min	1 to 240,000	24,000
178	Get/Set	Speed_29	DINT	Target speed 29 Unit: × 1000 steps/min	1 to 240,000	24,000
179	Get/Set	Speed_30	DINT	Target speed 30 Unit: × 1000 steps/min	1 to 240,000	24,000
180	Get/Set	Speed_31	DINT	Target speed 31 Unit: × 1000 steps/min	1 to 240,000	24,000
181	Get/Set	Speed_32	DINT	Target speed 32 Unit: × 1000 steps/min	1 to 240,000	24,000
182	Get/Set	Speed_33	DINT	Target speed 33 Unit: × 1000 steps/min	1 to 240,000	24,000
183	Get/Set	Speed_34	DINT	Target speed 34 Unit: × 1000 steps/min	1 to 240,000	24,000
184	Get/Set	Speed_35	DINT	Target speed 35 Unit: × 1000 steps/min	1 to 240,000	24,000
185	Get/Set	Speed_36	DINT	Target speed 36 Unit: × 1000 steps/min	1 to 240,000	24,000
186	Get/Set	Speed_37	DINT	Target speed 37 Unit: × 1000 steps/min	1 to 240,000	24,000

(cont'd)

No.	Access	Name	Data Type	Description	Setting Range	Default Setting
187	Get/Set	Speed_38	DINT	Target speed 38 Unit: × 1000 steps/min	1 to 240,000	24,000
188	Get/Set	Speed_39	DINT	Target speed 39 Unit: × 1000 steps/min	1 to 240,000	24,000
189	Get/Set	Speed_40	DINT	Target speed 40 Unit: × 1000 steps/min	1 to 240,000	24,000
190	Get/Set	Speed_41	DINT	Target speed 41 Unit: × 1000 steps/min	1 to 240,000	24,000
191	Get/Set	Speed_42	DINT	Target speed 42 Unit: × 1000 steps/min	1 to Å`240,000	24,000
192	Get/Set	Speed_43	DINT	Target speed 43 Unit: × 1000 steps/min	1 to 240,000	24,000
193	Get/Set	Speed_44	DINT	Target speed 44 Unit: × 1000 steps/min	1 to 240,000	24,000
194	Get/Set	Speed_45	DINT	Target speed 45 Unit: × 1000 steps/min	1 to 240,000	24,000
195	Get/Set	Speed_46	DINT	Target speed 46 Unit: × 1000 steps/min	1 to 240,000	24,000
196	Get/Set	Speed_47	DINT	Target speed 47 Unit: × 1000 steps/min	1 to 240,000	24,000
197	Get/Set	Speed_48	DINT	Target speed 48 Unit: × 1000 steps/min	1 to 240,000	24,000
198	Get/Set	Speed_49	DINT	Target speed 49 Unit: × 1000 steps/min	1 to 240,000	24,000
199	Get/Set	Speed_50	DINT	Target speed 50 Unit: × 1000 steps/min	1 to 240,000	24,000

Services

Service Code	Name	Description
0x0E	Get_Attribute_Single	Returns the specified attribute.
0x10	Set_Attribute_Single	Modifies the specified attribute.

Data Types

Data Type	Description	Size
DINT	Double-precision integer	4 bytes

10.2.8 Servo Driver Parameter Object (0x66)

Class and instances of the Servo Driver Parameter Object (0x66) are shown below.

■ Class

- Attributes: None supported
- Services: None supported

■ Instances

Attributes (Instance #1: Explicit Message)

No.	Access	Name	Data Type	Description	Setting Range	Default Setting
10	Get/Set	Function Selection Basic Switch	UINT	Sets function selection basic switches.	–	0010
11	Get/Set	Function Selection Application Switch 1	UINT	Sets function selection application switches 1.	–	1002
12	Get/Set	Function Selection Application Switch 2	UINT	Sets function selection application switches 2.	–	0000
13	Get/Set	Function Selection Application Switch 3	UINT	Sets function selection application switches 3.	–	0002
14	Get/Set	Not Used	UINT	Do not change the setting.	–	0000
15	Get/Set	Not Used	UINT	Not used	–	0000
50	Get/Set	Speed Loop Gain	UINT	Sets the speed loop gain. Unit: Hz	1 to 2000	80
51	Get/Set	Speed Loop Integra-tion Constant	UINT	Sets the speed loop integration time constant. Unit: 0.01ms	15 to 51200	2000
52	Get/Set	Position Loop Gain	UINT	Sets the position loop gain. Unit: 1/s	1 to 2000	40
53	Get/Set	Inertia Ratio	UINT	Sets the inertia ratio. Unit: %	0 to 10000	300
54	Get/Set	Speed Loop Gain 2	UINT	Sets the speed loop gain 2. Unit: Hz	1 to 2000	80
55	Get/Set	Speed Loop Integration Constant 2	UINT	Sets the speed loop integration constant 2. Unit: 0.01ms	15 to 51200	2000
56	Get/Set	Position Loop Gain 2	UINT	Sets the position loop gain 2. Unit: 1/s	1 to 2000	40
57	Get/Set	Bias Rotational Speed	UINT	Sets the bias rotational speed. Unit: r/min	0 to 450	0
58	Get/Set	Bias Addition Band	UINT	Sets the bias addition band. Unit: command unit	0 to 250	7
59	Get/Set	Feed-forward Amount	UINT	Sets the feed-forward amount. Unit: %	0 to 100	0

(cont'd)

No.	Access	Name	Data Type	Description	Setting Range	Default Setting
60	Get/Set	Feed-forward Command Filter	UINT	Sets the feed-forward command filter. Unit: 0.01 ms	0 to 6400	0
61	Get/Set	Speed Control Setting	UINT	Sets the speed control.	–	0004
62	Get/Set	P Control Switching (Torque Commands)	UINT	Sets the P control switching (torque commands). Unit: %	0 to 800	200
63	Get/Set	P Control Switching (Speed Commands)	UINT	Sets the P control switching (speed commands). Unit: r/min	0 to 10000	0
64	Get/Set	P Control Switching (Acceleration Commands)	UINT	Sets the P control switching (acceleration). Unit: 10 r/min/s	0 to 3000	0
65	Get/Set	P Control Switching (Deviation Pulse)	UINT	Sets the P control switching (deviation pulse). Unit: pulse	0 to 10000	10
66	Get/Set	Online Autotuning Setting	UINT	Sets the online autotuning.	–	0012
67	Get/Set	Speed Feedback Compensating Gain	UINT	Sets the speed feedback compensation. Unit: %	1 to 500	100
68	Get/Set	Not Used	UINT	Do not change the settings.	0 to 1000	100
69	Get/Set	Not Used	UINT	Do not change the settings.	0 to 1000	1000
70	Get/Set	Not Used	UINT	Do not change the settings.	0 to 1000	200
71	Get/Set	Not Used	UINT	Do not change the settings.	0 to 65535	32
72	Get/Set	Not Used	UINT	Do not change the settings.	0 to 65535	16
73	Get/Set	Not Used	UINT	Do not change the settings.	20 to 100	100
74	Get/Set	Not Used	UINT	Do not change the settings.	20 to 100	100
75	Get/Set	Not Used	UINT	Do not change the settings.	1 to 2000	50
76	Get/Set	Not Used	UINT	Do not change the settings.	1 to 2000	1000
77	Get/Set	Not Used	UINT	Do not change the settings.	1 to 150	50
78	Get/Set	Not Used	UINT	Do not change the settings.	1 to 150	70
79	Get/Set	Not Used	UINT	Do not change the settings.	0 to 150	100
80	Get/Set	Not Used	UINT	Do not change the settings.	0 to 150	100
81	Get/Set	Not Used	UINT	Do not change the settings.	0 to 2000	0
82	Get/Set	Not Used	UINT	Do not change the settings.	0 to 51200	0
83	Get/Set	Not Used	UINT	Do not change the settings.	10 to 250	50
84	Get/Set	Not Used	UINT	Do not change the settings.	0 to 250	0
85	Get/Set	Not Used	UINT	Do not change the settings.	0 to 100	0

(cont'd)

No.	Access	Name	Data Type	Description	Setting Range	Default Setting
100	Get/Set	Position Control Setting 1	UINT	Performs the position control setting 1.	–	0100
101	Get/Set	Encoder Divider Rate	UINT	Sets the encoder divider rate. Unit: p/r	16 to 16384	1000
102	Get/Set	Electronic Gear Ratio G1 Numerator	UINT	Sets the electronic gear ratio (G1) (numerator).	1 to 65535	1
103	Get/Set	Electronic Gear Ratio G2 Denominator	UINT	Sets the electronic gear ratio (G2) (denominator).	1 to 65535	1
104	Get/Set	Position Command Filter Time Constant 1	UINT	Sets the position command filter time constant 1. Unit: 0.01 ms	0 to 6400	0
105	Get/Set	Absolute Encoder Multi-Turn Limit Setting	UINT	Sets the absolute encoder multi-turn limit. Unit: rev	0 to 65535	65535
106	Get/Set	Number of Fully-closed Encoder Pulses	UINT	Sets the number of fully-closed encoder pulses.	25 to 65535	16384
107	Get/Set	Position Control Setting 2	UINT	Performs the position control setting 2.	–	0000
108	Get/Set	Position Command Filter Time Constant 2	UINT	Sets the position command filter time constant 2. Unit: 0.01 ms	0 to 6400	0
120	Get/Set	Speed Command Scale	UINT	Sets the speed command scale. Unit: 0.01 V/rated speed	150 to 3000	1000
121	Get/Set	No.1 Internal Speed Setting	UINT	Sets the No.1 internal speed. Unit: r/min	0 to 10000	100
122	Get/Set	No.2 Internal Speed Setting	UINT	Sets the No.2 internal speed. Unit: r/min	0 to 10000	200
123	Get/Set	No.3 Internal Speed Setting	UINT	Sets the No.3 internal speed. Unit: r/min	0 to 10000	300
124	Get/Set	JOG Speed	UINT	Sets the JOG speed. Unit: r/min	0 to 10000	500
125	Get/Set	Soft Start Acceleration Time	UINT	Sets the soft start acceleration time. Unit: ms	0 to 10000	0
126	Get/Set	Soft Start Deceleration Time	UINT	Sets the soft start deceleration time. Unit: ms	0 to 10000	0
127	Get/Set	Speed Command Filter Time Constant	UINT	Sets the speed command filter time constant. Unit: 0.01 ms	0 to 65535	40
128	Get/Set	Speed Feedback Filter Time Constant	UINT	Sets the speed feedback filter time constant. Unit: 0.01 ms	0 to 65535	0
140	Get/Set	Torque Command Scale	UINT	Sets the torque command scale. Unit: 0.1 V/rated torque	10 to 100	30
141	Get/Set	Torque Command Filter Time Constant	UINT	Sets the torque command filter time constant. Unit: 0.01 ms	0 to 65535	40
142	Get/Set	Forward Torque Limit	UINT	Sets the forward torque limit. Unit: %	0 to 800	350

(cont'd)

No.	Access	Name	Data Type	Description	Setting Range	Default Setting
143	Get/Set	Reverse Torque Limit	UINT	Sets the reverse torque limit. Unit: %	0 to 800	350
144	Get/Set	Forward Rotation External Torque Limit	UINT	Sets the forward rotation external torque limit. Unit: %	0 to 800	100
145	Get/Set	Reverse Rotation External Torque Limit	UINT	Sets the reverse rotation external torque limit. Unit: %	0 to 800	100
146	Get/Set	Emergency Stop Torque	UINT	Sets the emergency stop torque. Unit: %	0 to 800	350
147	Get/Set	Speed Limit	UINT	Sets the speed limit . Unit: r/min	0 to 10000	3000
148	Get/Set	Torque Command Setting	UINT	Sets the torque command.	–	0000
149	Get/Set	Notch Filter Frequency	UINT	Sets the notch filter frequency. Unit: Hz	50 to 2000	2000
160	Get/Set	Positioning Completion Range 1	UINT	Sets the positioning completion range 1. Unit: command unit	0 to 250	3
161	Get/Set	Positioning Lock Rotation Speed	UINT	Sets the positioning lock rotation speed. Unit: r/min	0 to 10000	10
162	Get/Set	Rotation Speed for Motor Rotation Detection	UINT	Sets the rotation speed for motor rotation detection. Unit: r/min	0 to 10000	20
163	Get/Set	Speed Conformity Signal Output Width	UINT	Sets the speed conformity signal output width. Unit: r/min	0 to 100	10
164	Get/Set	Positioning Completion Range 2	UINT	Sets the positioning completion range 2. Unit: command unit	1 to 250	3
165	Get/Set	Deviation Counter Overflow Level	UINT	Sets the deviation counter overflow level. Unit: × 256 Command Unit	1 to 32767	1024
166	Get/Set	Brake Timing 1	UINT	Sets the brake timing 1. Unit: 10 ms	0 to 50	0
167	Get/Set	Brake Command Speed	UINT	Sets the brake command speed. Unit: r/min	0 to 10000	100
168	Get/Set	Brake Timing 2	UINT	Sets the brake timing 2. Unit: 10 ms	10 to 100	50
169	Get/Set	Momentary Hold Time	UINT	Sets the momentary hold time. Unit: ms	20 to 1000	20
170	Get/Set	Input Signal Selection 1	UINT	Sets the input signal selection 1.	–	8881
171	Get/Set	Input Signal Selection 2	UINT	Sets the input signal selection 2.	–	8888
172	Get/Set	Input Signal Selection 3	UINT	Sets the input signal selection 3.	–	8888
173	Get/Set	Input Signal Selection 4	UINT	Sets the input signal selection 4.	–	8888

(cont'd)

No.	Access	Name	Data Type	Description	Setting Range	Default Setting
174	Get/Set	Output Signal Selection 1	UINT	Sets the output signal selection 1.	–	3211
175	Get/Set	Output Signal Selection 2	UINT	Sets the output signal selection 2.	–	0000
176	Get/Set	Output Signal Selection 3	UINT	Sets the output signal selection 3.	–	0000
177	Get/Set	Not Used	UINT	Not used	–	8888
178	Get/Set	Output Signal Reverse	UINT	Sets the output signal reversals.	–	0000
181	Get/Set	Motor-Load Deviation Over Level	UINT	Sets the position deviation over level between the motor and load.	0 to 32767	0
190	Get/Set	Regeneration Registor Capacity	UINT	Sets the regenerative register capacity. Unit: 10 W	–	0
191	Get/Set	Not Used	UINT	Do not change the settings.	–	0

Services

Service Code	Name	Description
0x0E	Get_Attribute_Single	Returns the specified attribute.
0x10	Set_Attribute_Single	Modifies the specified attribute.

Data Types

Data Type	Description	Size
UINT	Unsigned integer	2 bytes

10.2.9 Trace Setting Object (0x67)

Class and instances of the Trace Setting Object (0x67) are shown below.

■ Class

- Attributes: None supported
- Services: None supported

■ Instances

Attributes (Instance #1: Explicit Message)

No.	Access	Name	Data Type	Description	Setting Range	Default Setting
10	Get/Set	Data Trace 1	UINT	Specifies the data trace 1 target.	0 to 4	0
11	Get/Set	Data Trace 2	UINT	Specifies the data trace 2 target.	0 to 4	1
12	Get/Set	I/O Trace 1	UINT	Specifies the I/O trace 1 target.	80 to 8D Hex	83 Hex
13	Get/Set	I/O Trace 2	UINT	Specifies the I/O trace 2 target.	80 to 8D Hex	81 Hex
14	Get/Set	Sampling Cycle	DINT	Specifies the sampling cycle. Unit: μs	250 to 8191750	250
15	Get/Set	Trigger Target	UINT	Specifies the trigger condition.	0 to 4	0
16	Get/Set	Trigger Level	UINT	Specifies the trigger level.	0000 to FFFF Hex	0
17	Get/Set	Edge Type	UINT	Specifies the edge type.	0 to 2	0
18	Get/Set	Pre-trigger	UINT	Specifies the amount of pre-trigger data.	0 to 999	0
19	Get/Set	Start Trace	UINT	Specifies the trace execution status. 0: No-operation (initial status) 1: Trace Start Command 2: Trace Stop Command	0 to 2	0
20	Get	Trace State	UINT	Stores the trace execution status. 0000 Hex: Initial status 0001 Hex: Tracing data. 0002 Hex: Trace completed. (Read enabled.) 0010 Hex: Trace interrupted. 0011 Hex: Setting error	–	0

Services

Service Code	Name	Description
0x0E	Get_Attribute_Single	Returns the specified attribute.
0x10	Set_Attribute_Single	Modifies the specified attribute.

Data Types

Data Type	Description	Size
UINT	Unsigned integer	2 bytes
DINT	Double-precision integer	4 bytes

10.2.10 Trace Data Object (0x68)

Class and instances of the Trace Data Object (0x68) are shown below.

■ Class

- Attributes: None supported
- Services: None supported

■ Instances

Attributes (Instance #1: Explicit Message)

Data	Service	Data Range
Data Trace 1	0x1C (Byte data read)	1 to 1000
	0x1D (Word data read)	

Attributes (Instance #2: Explicit Message)

Data	Service	Data Range
Data Trace 2	0x1C (Byte data read)	1 to 1000
	0x1D (Word data read)	

Attributes (Instance #3: Explicit Message)

Data	Service	Data Range
I/O Trace 1	0x1C (Byte data read)	1 to 63
	0x1D (Word data read)	

Attributes (Instance #4: Explicit Message)

Data	Service	Data Range
I/O Trace 2	0x1C (Byte data read)	1 to 63
	0x1D (Word data read)	

10.3 Alarm/Warning Codes and Error Codes for Message Communications

This section lists the alarm/warning codes and error codes for message communications.

10.3.1 Alarm Codes

Alarm codes are displayed on the front of the W-series Servo Driver and, at the same time, can also be read as responses at the host device connected via DeviceNet. Alarms are also displayed using the MS and NS indicators on the DeviceNet Unit.

The MS indicator is the module status; the NS indicator is the network status. The required indicator responses are shown in the table.

The alarm codes are shown below.

Code	MS LED	NS LED	Alarm Name	Description
A.02	Flashes Red.	–	Parameter Corruption	EEPROM data of Servo Driver is abnormal.
A.03	Lit Red.	–	Main-circuit Detection Error	Detection data for power circuit is abnormal.
A.04	Flashes Red.	–	Parameter Setting Error	The parameter setting is out of the allowable setting range.
A.05	Flashes Red.	–	Servomotor Mismatch	Servo Driver and Servomotor capacities do not match each other.
A.10	Flashes Red.	–	Overcurrent	An overcurrent flowed through the IGBT. Heat sink of Servo Driver was overheated.
A.30	Lit Red.	–	Regeneration Error	• Regenerative resistor is disconnected. • Regenerative transistor is defective.
A.32	Flashes Red.	–	Regeneration Overload	Regenerative energy exceeds regenerative resistor capacity.
A.33	–	–	Main-circuit Power Supply Setting Error	The AC/DC wiring method of the main circuit power supply is different from the setting of the parameter Pn001.2 (Power Supply AC/DC Input Selection).
A.40	Flashes Red.	–	Overvoltage	Main circuit DC voltage is excessively high.
A.41	Flashes Red.	–	Low Voltage	Main circuit DC voltage is low.
A.51	Flashes Red.	–	Overspeed	Rotational speed of the motor is excessively high.
A.71	Flashes Red.	–	Overload	The motor was operating for several seconds to several tens of seconds under a torque largely exceeding ratings.
A.72	Flashes Red.	–	Overload	The motor was operating continuously under a torque largely exceeding rating.
A.73	Flashes Red.	–	Dynamic Brake Overload	When the dynamic brake was applied, rotational energy exceeded the capacity of dynamic brake resistor.
A.74	Flashes Red.	–	Inrush Resistance Overload	The main circuit power was frequently turned ON and OFF.

(cont'd)

Code	MS LED	NS LED	Alarm Name	Description
A.7A	Flashes Red.	–	Overheat	The heat sink of Servo Driver is overheated.
A.81	Flashes Red.	–	Backup Error	All the power supplies for the absolute encoder have failed and position data was cleared.
A.82	Flashes Red.	–	Checksum Error	The checksum results of the absolute encoder memory are abnormal.
A.83	Flashes Red.	–	Battery Error	Backup battery voltage for the absolute encoder has dropped.
A.84	Lit Red.	–	Absolute Error	Data in the encoder is abnormal.
A.85	Flashes Red.	–	Overspeed Error	The Servomotor was rotating at 200 r/min or more when the power was turned ON.
A.86	Flashes Red.	–	Encoder Overheating	The internal temperature of encoder is too high.
A.B1	Flashes Red.	–	Speed Command Input Reading Error	The A/D converter for speed command input is defective.
A.B2	Flashes Red.	–	Torque Command Input Reading Error	The A/D converter for torque commad input is defective.
A.B6	Flashes Red.	–	Gate Array Error	Communications LSI error.
A.BF	Flashes Red.	–	System Error	A system error occurred in the Servo Driver.
A.C1	Flashes Red.	–	Runaway Detected	The Servomotor ran out of control.
A.C6	Flashes Red.	–	Fully-closed Encoder Phase-A, -B Disconnection	Phase A or B of the fully-closed encoder was disconnected.
A.C7	Flashes Red.	–	Fully-closed Encoder Phase-Z Disconnection	Phase Z of the fully-closed encoder was disconnected.
A.C8	Lit Red.	–	Multi-turn Data Error	The multi-turn for the absolute encoder was not properly cleared or set.
A.C9	Flashes Red.	–	Encoder Communications Error	Communications between Servo Driver and encoder is not possible.
A.CA	Lit Red.	–	Encoder Parameter Error	Encoder parameters are incorrect.
A.CB	Flashes Red.	–	Encoder Data Error	Contents of communications with encoder are incorrect.
A.CC	Flashes Red.	–	Multi-turn Limit Discrepancy	Different multi-turn limits have been set in the encoder and Servo Driver.
A.D0	Flashes Red.	–	Deviation Counter Overflow	Lag pulse of the deviation counter exceeded the parameter (Pn505).
A.D1	–	–	Motor-Load Deviation Over	The Motor-Load Deviation Over Level (Pn51A) was exceeded for fully-closed encoder and semi-closed encoder.
A.E0	–	–	No DeviceNet Unit	No DeviceNet Unit installed.
A.E1	–	–	DeviceNet Unit Timeout	No response from the DeviceNet Unit.
A.E2	–	–	WDC Error of DeviceNet Unit	WDC error in the DeviceNet Unit.
A.E6	–	–	DeviceNet Duplicate MAC ID Error	Same node address already exists on the DeviceNet network.
A.E7	–	–	DeviceNet Unit Detection Error	No DeviceNet Unit was detected when the power was supplied to the W-series Servo Driver.

(cont'd)

Code	MS LED	NS LED	Alarm Name	Description
A.E8	Flashes Red.	–	Rotary Switch Setting Error	Unit rotary switch setting error.
A.E9	–	Lit Red.	DeviceNet Busoff Error	Fatal communications error has occurred in DeviceNet communications.
A.EA	Flashes Red.	–	Servo Driver System Error	Servo Driver is defective.
A.EB	Flashes Red.	–	Servo Driver Initial Access Error	Initial processing failed.
A.EC	Flashes Red.	–	WDC Error of Servo Driver	WDC error in the Servo Driver.
A.ED	Lit Red.	–	Command Execution Incomplete Error	Command was interrupted.
A.EE	Flashes Red.	–	Option Parameter Error	The parameters of the DeviceNet Unit contain abnormalities.
A.F1	Flashes Red.	–	Missing Phase Detected	One phase in the 3-phase main power supply is not connected.

10.3.2 Warning Codes

The warning codes are shown below.

Warning Code	MS LED	NS LED	Warning Name	Description
A.91	Flashes Red.	–	Overload	This warning occurs before the overload alarms (A.71 or A.72) occur. If the warning is ignored and operation continues, an overload alarm may occur.
A.92	Flashes Red.	–	Regeneration Overload	This warning occurs before the regenerative overload alarm (A.32) occurs. If the warning is ignored and operation continues, a regenerative overload alarm may occur.
A.93	Flashes Red.	–	Battery Warning	This warning occurs before the absolute encoder battery error alarm occurs. If the power supply is turned OFF, the alarm may occur when the power supply is turned ON.
A.94	Flashes Red.	–	Parameter Setting Warning	A value outside the setting range was set using DeviceNet communications. • Incorret parameter No. and data at the Parameter Write Command. • Incorrect parameter No. at the Parameter Read Command
A.95	Flashes Red.	–	Command Warning	A command not supported in the product specifications was issued. The command reception conditions were not met. • Illegal command • Command given during execution of another move command • Command given during servo OFF • Command given during alarm • Command given during emergency stop • Move command data error
A.96	–	Flashes Red.	Communications Warning	A DeviceNet communications error occurred (once).
A.98	Flashes Red.	–	Main Power OFF	The main power supply is not being supplied.
A.9A	Flashes Red.	–	Positioning Timer Timeout	Positioning was not completed within the positioning monitoring time.

10.3.3 Error Codes for Message Communications

If an Explicit Message has been sent and then is not completed normally, an error code (2 bytes) is added after service code “14 Hex,” and an Explicit Message is returned.

The message communications error codes are shown below.

Error Code	Error Name	Description
09FF Hex	Invalid attribute value	There is an error in the attribute data for the requested service.
0BFF Hex	Already in requested mode/state	The specified object is already in the requested mode or state.
0CFF Hex	Object state conflict	The specified object is in a state in which the requested service cannot be executed.
0EFF Hex	Attribute not settable	The requested setting service has specified an attribute that cannot be changed.
10FF Hex	Device state conflict	The specified device is in a state in which the requested service cannot be executed.
13FF Hex	Not enough data	The requested service is not providing enough data to execute the processing.
14FF Hex	Attribute not sup-ported	The requested service specified an unsupported attribute.
15FF Hex	Too much data	The requested service included invalid data.

INDEX

Numerics

24 V external power supply input - 8-14

A

absolute encoder - 8-20
alarm codes - 10-28
alarm name - 9-2
Alarm Reset Command - 6-61
attributes - 10-3

B

baud rate - 4-19
brake operation - 8-18

C

CMND instruction - 6-68
CN1 connector - 4-7, 4-8, 4-9, 8-4
CN10 connector - 2-6
CN11 connector - 2-5
CN4 connector - 2-5, 4-12
CN6 connector - 2-5
command codes - 6-26, 6-34
communications distance - 4-19
communications power supply - 6-6
communications power supply location - - - - - - - - - - - - - - - - - - - 6-6
CRC check - 6-65
CS/CJ-series DeviceNet Master Unit - - - - - - - - - - - - - - - - - - - 6-68

D

DeviceNet Configurator - 1-4, 5-2
DeviceNet connection example - 4-17
DeviceNet connector specifications - 4-15
DeviceNet Master Unit - 6-20
Direct Operation Command - 6-52
dynamic brake - 8-9, 8-15

E

EDS files - 1-2
electronic gear function - 5-10
Emergency Stop Command - 6-61
encoder cable - 4-3, 4-4, 4-5
encoder connector - 4-3, 4-4, 4-5
environmental conditions - 3-4
error responses - 6-66
Explicit Message communications - - - - - - - - - - - - - - - - - - - 6-20, 6-65
external regenerative resistor - 4-3, 4-4, 4-5

F

forward command - 8-8
fully-closed encoder - 4-14, 8-10
function outlines - 1-5

G

G mark - 2-7
general command bits (command) - 6-22
general status (response) - 6-24
ground line connecting screw - 2-6

I

Interrupt Feeding Command - 6-53

J

JOG Command - 6-42, 6-61

M

MS (module status) indicator - 6-5
Multi-speed Positioning Command - 6-57
multi-turn limit setting - 8-21

N

nameplate - 2-4
nodes - 4-17
noise filter - 4-3, 4-4, 4-5
noise prevention - 6-16
no-operation - 1-5, 6-42
Notch Output Positioning Command - 6-55
NS (network status) indicator - 6-5

O

object name - 6-78
OFF voltage - 1-7
ON voltage - 1-7
operation - 1-5, 6-52
Origin Search Command - 6-50, 6-62
origin search parameters - 5-20
output circuit - 4-10

P

parameter tables - 5-4
Parameter Unit - 4-3, 4-4, 4-5, 8-23
Point Table Command - 6-48, 6-62
positioning parameters - 5-41

R

Remote I/O communications - 6-20, 6-21
reverse command - 8-8
rotary switch - 6-4, 6-5

S

sampling interval - 6-73
sequence input circuit - 4-10
sequence input signal - 8-13
sequence output signal - 8-14
Servo ON/OFF Command - 6-60
Servomotor rotation direction - 8-8
Setup Tool - 1-3, 4-3, 4-4, 4-5, 5-2
speed, acceleration, and deceleration parameters - - - - - - - - - - - - 5-26
standard settings - 8-4, 8-8
Station Command - 6-46, 6-62
Step Command - 6-44, 6-62

T

terminating resistor - 4-18, 4-21
trace settings - 6-71
trunk line and drop lines - 4-17, 4-18

U

Unit Reset Command - 6-64

W

warning codes - 10-31

OMRON Corporation
Systems Components Division
66 Matsumoto
Mishima-city, Shizuoka 411-8511
Japan
Tel: (81)559-77-9633/Fax: (81)559-77-9097

Authorized Distributor:

Cat. No. I538-E1-01

Note: Specifications subject to change without notice.

Printed in Japan

Read and Understand this Manual

Please read and understand this manual before using the product. Please consult your OMRON representative if you have any questions or comments.

Warranty and Limitations of Liability

WARRANTY

OMRON's exclusive warranty is that the products are free from defects in materials and workmanship for a period of one year (or other period if specified) from date of sale by OMRON.

OMRON MAKES NO WARRANTY OR REPRESENTATION, EXPRESS OR IMPLIED, REGARDING NON-INFRINGEMENT, MERCHANTABILITY, OR FITNESS FOR PARTICULAR PURPOSE OF THE PRODUCTS. ANY BUYER OR USER ACKNOWLEDGES THAT THE BUYER OR USER ALONE HAS DETERMINED THAT THE PRODUCTS WILL SUITABLY MEET THE REQUIREMENTS OF THEIR INTENDED USE. OMRON DISCLAIMS ALL OTHER WARRANTIES, EXPRESS OR IMPLIED.

LIMITATIONS OF LIABILITY

OMRON SHALL NOT BE RESPONSIBLE FOR SPECIAL, INDIRECT, OR CONSEQUENTIAL DAMAGES, LOSS OF PROFITS OR COMMERCIAL LOSS IN ANY WAY CONNECTED WITH THE PRODUCTS, WHETHER SUCH CLAIM IS BASED ON CONTRACT, WARRANTY, NEGLIGENCE, OR STRICT LIABILITY.

In no event shall the responsibility of OMRON for any act exceed the individual price of the product on which liability is asserted.

IN NO EVENT SHALL OMRON BE RESPONSIBLE FOR WARRANTY, REPAIR, OR OTHER CLAIMS REGARDING THE PRODUCTS UNLESS OMRON'S ANALYSIS CONFIRMS THAT THE PRODUCTS WERE PROPERLY HANDLED, STORED, INSTALLED, AND MAINTAINED AND NOT SUBJECT TO CONTAMINATION, ABUSE, MISUSE, OR INAPPROPRIATE MODIFICATION OR REPAIR.

Application Considerations

SUITABILITY FOR USE

OMRON shall not be responsible for conformity with any standards, codes, or regulations that apply to the combination of products in the customer's application or use of the products.

At the customer's request, OMRON will provide applicable third party certification documents identifying ratings and limitations of use that apply to the products. This information by itself is not sufficient for a complete determination of the suitability of the products in combination with the end product, machine, system, or other application or use.

The following are some examples of applications for which particular attention must be given. This is not intended to be an exhaustive list of all possible uses of the products, nor is it intended to imply that the uses listed may be suitable for the products:

- Outdoor use, uses involving potential chemical contamination or electrical interference, or conditions or uses not described in this manual.
- Nuclear energy control systems, combustion systems, railroad systems, aviation systems, medical equipment, amusement machines, vehicles, safety equipment, and installations subject to separate industry or government regulations.
- Systems, machines, and equipment that could present a risk to life or property.

Please know and observe all prohibitions of use applicable to the products.

NEVER USE THE PRODUCTS FOR AN APPLICATION INVOLVING SERIOUS RISK TO LIFE OR PROPERTY WITHOUT ENSURING THAT THE SYSTEM AS A WHOLE HAS BEEN DESIGNED TO ADDRESS THE RISKS, AND THAT THE OMRON PRODUCTS ARE PROPERLY RATED AND INSTALLED FOR THE INTENDED USE WITHIN THE OVERALL EQUIPMENT OR SYSTEM.

PROGRAMMABLE PRODUCTS

OMRON shall not be responsible for the user's programming of a programmable product, or any consequence thereof.

Disclaimers

CHANGE IN SPECIFICATIONS

Product specifications and accessories may be changed at any time based on improvements and other reasons.

It is our practice to change model numbers when published ratings or features are changed, or when significant construction changes are made. However, some specifications of the products may be changed without any notice. When in doubt, special model numbers may be assigned to fix or establish key specifications for your application on your request. Please consult with your OMRON representative at any time to confirm actual specifications of purchased products.

DIMENSIONS AND WEIGHTS

Dimensions and weights are nominal and are not to be used for manufacturing purposes, even when tolerances are shown.

PERFORMANCE DATA

Performance data given in this manual is provided as a guide for the user in determining suitability and does not constitute a warranty. It may represent the result of OMRON's test conditions, and the users must correlate it to actual application requirements. Actual performance is subject to the OMRON Warranty and Limitations of Liability.

ERRORS AND OMISSIONS

The information in this manual has been carefully checked and is believed to be accurate; however, no responsibility is assumed for clerical, typographical, or proofreading errors, or omissions.