Cat. No. Z129-E1-02

生産終了
DISCONTINUED

# V600 RFID System
# V600-HAM42-DRT
# Intelligent Flag III (DeviceNet-compatible)

# OPERATION MANUAL

OMRON

# V600 RFID System
# V600-HAM42-DRT Intelligent Flag III (DeviceNet-compatible)

## Operation Manual

*Revised January 2005*

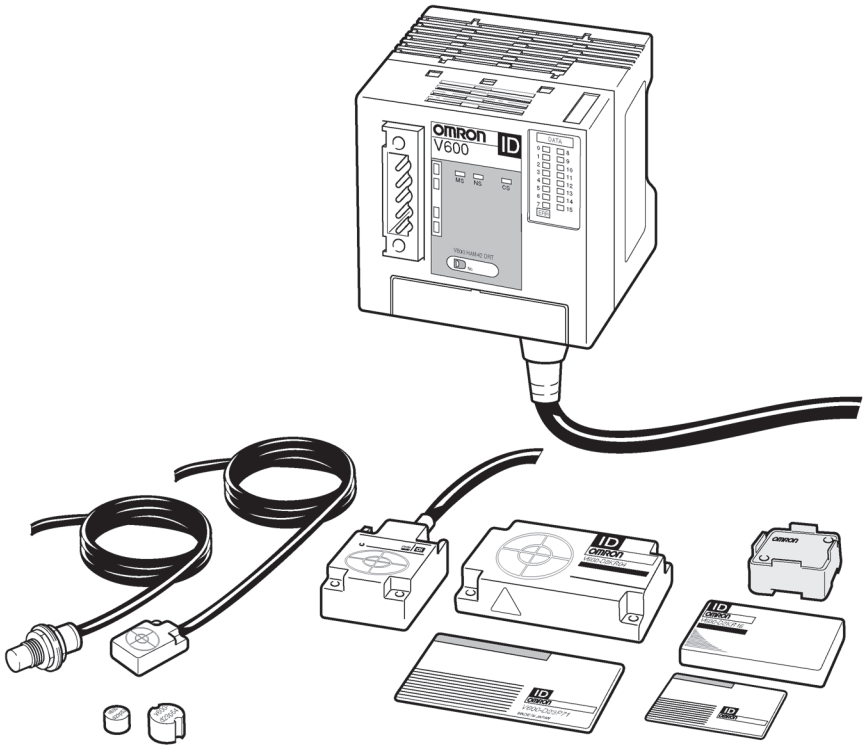

## READ AND UNDERSTAND THIS DOCUMENT

Please read and understand this document before using the products. Please consult your OMRON representative if you have any questions or comments.

## WARRANTY

OMRON's exclusive warranty is that the products are free from defects in materials and workmanship for a period of one year (or other period if specified) from date of sale by OMRON.

OMRON MAKES NO WARRANTY OR REPRESENTATION, EXPRESS OR IMPLIED, REGARDING NON-INFRINGEMENT, MERCHANTABILITY, OR FITNESS FOR PARTICULAR PURPOSE OF THE PRODUCTS. ANY BUYER OR USER ACKNOWLEDGES THAT THE BUYER OR USER ALONE HAS DETERMINED THAT THE PRODUCTS WILL SUITABLY MEET THE REQUIREMENTS OF THEIR INTENDED USE. OMRON DISCLAIMS ALL OTHER WARRANTIES, EXPRESS OR IMPLIED.

## LIMITATIONS OF LIABILITY

OMRON SHALL NOT BE RESPONSIBLE FOR SPECIAL, INDIRECT, OR CONSEQUENTIAL DAMAGES, LOSS OF PROFITS OR COMMERCIAL LOSS IN ANY WAY CONNECTED WITH THE PRODUCTS, WHETHER SUCH CLAIM IS BASED ON CONTRACT, WARRANTY, NEGLIGENCE, OR STRICT LIABILITY.

In no event shall responsibility of OMRON for any act exceed the individual price of the product on which liability is asserted.

IN NO EVENT SHALL OMRON BE RESPONSIBLE FOR WARRANTY, REPAIR, OR OTHER CLAIMS REGARDING THE PRODUCTS UNLESS OMRON ANALYSIS CONFIRMS THAT THE PRODUCTS WERE PROPERLY HANDLED, STORED, INSTALLED, AND MAINTAINED AND NOT SUBJECT TO CONTAMINATION, ABUSE, MISUSE, OR INAPPROPRIATE MODIFICATION OR REPAIR.

## SUITABILITY FOR USE

THE PRODUCTS CONTAINED IN THIS DOCUMENT ARE NOT SAFETY RATED. THEY ARE NOT DESIGNED OR RATED FOR ENSURING SAFETY OF PERSONS, AND SHOULD NOT BE RELIED UPON AS A SAFETY COMPONENT OR PROTECTIVE DEVICE FOR SUCH PURPOSES. Please refer to separate catalogs for OMRON's safety rated products.

OMRON shall not be responsible for conformity with any standards, codes, or regulations that apply to the combination of products in the customer's application or use of the product.

At the customer's request, OMRON will provide applicable third party certification documents identifying ratings and limitations of use that apply to the products. This information by itself is not sufficient for a complete determination of the suitability of the products in combination with the end product, machine, system, or other application or use.

The following are some examples of applications for which particular attention must be given. This is not intended to be an exhaustive list of all possible uses of the products, nor is it intended to imply that the uses listed may be suitable for the products:

- Outdoor use, uses involving potential chemical contamination or electrical interference, or conditions or uses not described in this document.
- Nuclear energy control systems, combustion systems, railroad systems, aviation systems, medical equipment, amusement machines, vehicles, safety equipment, and installations subject to separate industry or government regulations.
- Systems, machines, and equipment that could present a risk to life or property.

Please know and observe all prohibitions of use applicable to the products.
NEVER USE THE PRODUCTS FOR AN APPLICATION INVOLVING SERIOUS RISK TO LIFE OR PROPERTY WITHOUT ENSURING THAT THE SYSTEM AS A WHOLE HAS BEEN DESIGNED TO ADDRESS THE RISKS, AND THAT THE OMRON PRODUCT IS PROPERLY RATED AND INSTALLED FOR THE INTENDED USE WITHIN THE OVERALL EQUIPMENT OR SYSTEM.

## PERFORMANCE DATA

Performance data given in this document is provided as a guide for the user in determining suitability and does not constitute a warranty. It may represent the result of OMRON's test conditions, and the users must correlate it to actual application requirements. Actual performance is subject to the OMRON Warranty and Limitations of Liability.

## CHANGE IN SPECIFICATIONS

Product specifications and accessories may be changed at any time based on improvements and other reasons.

It is our practice to change model numbers when published ratings or features are changed, or when significant construction changes are made. However, some specifications of the product may be changed without any notice. When in doubt, special model numbers may be assigned to fix or establish key specifications for your application on your request. Please consult with your OMRON representative at any time to confirm actual specifications of purchased products.

## DIMENSIONS AND WEIGHTS

Dimensions and weights are nominal and are not to be used for manufacturing purposes, even when tolerances are shown.

## ERRORS AND OMISSIONS

The information in this document has been carefully checked and is believed to be accurate; however, no responsibility is assumed for clerical, typographical, or proofreading errors, or omissions.

## PROGRAMMABLE PRODUCTS

OMRON shall not be responsible for the user's programming of a programmable product, or any consequence thereof.

## COPYRIGHT AND COPY PERMISSION

This document shall not be copied for sales or promotions without permission.

This document is protected by copyright and is intended solely for use in conjunction with the product. Please notify us before copying or reproducing this document in any manner, for any other purpose. If copying or transmitting this document to another, please copy or transmit it in its entirety.

## Meanings of Signal Words

The following signal words are used in this manual.

| | |
|---|---|
| ⚠ **WARNING** | Indicates a potentially hazardous situation which, if not avoided, will result in minor or moderate injury, or may result in serious injury or death. Additionally there may be significant property damage. |
| ⚠ **CAUTION** | Indicates a potentially hazardous situation which, if not avoided, may result in minor or moderate injury or in property damage. |

## Meanings of Alert Symbols

The following alert symbols are used in this manual.

| | |
|---|---|
| | Indicates the possibility of explosion under specific conditions. |
| | Indicates the possibility of fire under specific conditions. |

## Alert Statements in this Manual

The following alert statements apply to the products in this manual. Each alert statement also appears at the locations needed in this manual to attract your attention.

**⚠ WARNING**

The SRAM-type Data Carrier has a built-in lithium battery which can combust or explode if mishandled. Do not disassemble the Data Carrier, or subject it to high pressure or high temperatures (of 100°C or more), or dispose of it by incineration.

**⚠ WARNING**

Always be sure to house the V600-HAM42-DRT Amplifier (including the cable and connector) in a control box. Exposure to water, oil, dust, metal powder, corrosive gases, or machine solvents may result in faulty operation, damage to the product or fire.

## ⚠ CAUTION

Be sure to observe the following precautions.

**Power Supply Voltage**
Do not use an AC (100 VAC) power supply or any voltage exceeding the rated voltage. Unsuitable power supplies may cause the equipment to explode or burn.

**Load Short-circuiting**
Do not short-circuit the load or connect it to the power supply. Doing either of these may cause the equipment to explode or burn

**Wiring**
Be careful not to make wiring mistakes such as reversing the polarity of the power supply. Wiring mistakes may cause the equipment to explode or burn.

**Operating Environment**
Do not use the equipment in locations subject to corrosive, explosive or flammable gases, or dust (especially metallic dust).

**Construction**
Do not remove the product's outer case. Doing so may adversely affect performance.
Be careful not to allow metallic dust to enter the product's ventilation ducts. Metallic dust can cause malfunctioning, damage to the equipment, or combustion.

**EC Directives**
To conform to EC Directives, connect a ferrite core (ZCAT2035-0930 by TDK) as shown below. This regulation applies to only the V600-HS63 Sensor (2-m cable). Connect the ferrite core to the end of the Sensor's cable (near the connector).

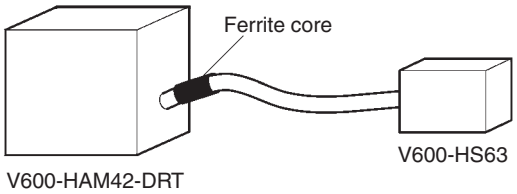


## ⚠ CAUTION

Be sure to ground the mounting surface if it is metal.

## ⚠ CAUTION

The V600-D23P71/P72 Data Carriers have no chemical and oil resistance. Do not use them in places exposed to spattering from chemicals and oil.

## Standard Conformity

1. **FCC Rules (Federal Communications Commission)**

   This product complies with Part 15 Subpart C of the FCC Rules.
   FCC ID: E4E6CYSIDV6000190

2. **European Radio and EMC Standards (EC/R&TTE: Radio and Telecommunication Terminal Equipment Directive 1999/5/EC)**

   Radio: EN 300 330 (06-2001)
   EMC: EN 301 489-3 (08-2002)
   EN 301 489-1 (08-2002)
   Safety: EN60950 (IEC 950:1992+A1:1993+A2:1993+A3:1995+A4:1997+A11:1997 modified)

   Countries of intended use:
   Ireland (excluding the V600-H07), Sweden, Germany (excluding the V600-H07), and Finland

CE 0678

## Notice:

OMRON products are manufactured for use according to proper procedures by a qualified operator and only for the purposes described in this manual.

The following conventions are used to indicate and classify precautions in this manual. Always heed the information provided with them. Failure to heed precautions can result in injury to people or damage to property.

## OMRON Product References

All OMRON products are capitalized in this manual. The word “Unit” is also capitalized when it refers to an OMRON product, regardless of whether or not it appears in the proper name of the product.

The abbreviation “Ch,” which appears in some displays and on some OMRON products, often means “word” and is abbreviated “Wd” in documentation in this sense.

The abbreviation “PC” means Programmable Controller and is not used as an abbreviation for anything else.

## Visual Aids

The following headings appear in the left column of the manual to help you locate different types of information.

**Note** Indicates information of particular interest for efficient and convenient operation of the product.

***1, 2, 3...*** 1. Indicates lists of one sort or another, such as procedures, checklists, etc.

**© OMRON, 1999**

All rights reserved. No part of this publication may be reproduced, stored in a retrieval system, or transmitted, in any form, or by any means, mechanical, electronic, photocopying, recording, or otherwise, without the prior written permission of OMRON.

No patent liability is assumed with respect to the use of the information contained herein. Moreover, because OMRON is constantly striving to improve its high-quality products, the information contained in this manual is subject to change without notice. Every precaution has been taken in the preparation of this manual. Nevertheless, OMRON assumes no responsibility for errors or omissions. Neither is any liability assumed for damages resulting from the use of the information contained in this publication.

# TABLE OF CONTENTS


## SECTION 1
## Introduction . . . . . 1

1-1 Features . . . . . 2
1-2 Models . . . . . 3
1-3 System Configuration . . . . . 3
1-4 Overview of System Operation . . . . . 5

## SECTION 2
## Specifications and Performance . . . . . 7

2-1 Amplifiers . . . . . 8
2-2 Sensors . . . . . 18
2-3 Data Carriers (EEPROM, Without Battery) . . . . . 21
2-4 Data Carriers (SRAM, With Built-in Battery) . . . . . 26

## SECTION 3
## Transmission Specifications . . . . . 33

3-1 Transmission Distance . . . . . 34
3-2 Transmission Time . . . . . 37

## SECTION 4
## Installation . . . . . 39

4-1 Installing Amplifiers . . . . . 40
4-2 Installing Sensors . . . . . 44
4-3 Installing Data Carriers . . . . . 52

## SECTION 5
## Communicating With Host Devices . . . . . 61

5-1 Read Operation in AUTO Mode . . . . . 62
5-2 Read Operation in SYNC Mode . . . . . 64
5-3 Write Operation in AUTO Mode . . . . . 66
5-4 Write Operation in SYNC Mode . . . . . 68
5-5 Sample Program for Host . . . . . 70
5-6 Error Processing . . . . . 71

## SECTION 6
## Chemical Resistance . . . . . 73

6-1 V600-HS51, V600-HS61, V600-HS63, and V600-HS67 Sensors . . . . . 74
6-2 Data Carriers . . . . . 75

## Appendices

A Accessories (Sold Separately) . . . . . 79
B I/O Allocation . . . . . 81
C Multi-vendor Applications . . . . . 83
D Conformity to Standards . . . . . 87

## Revision History . . . . . 89

# About this Manual:

This manual describes the installation and operation of the V600 RFID System Intelligent Flag III for the DeviceNet and includes the sections described below.

Please read this manual carefully and be sure you understand the information provided before attempting to install and operate the V600 RFID System Intelligent Flag III. Keep this manual in a convenient location where it can continue to be used for reference and guidance.

***Section 1*** provides a general introduction to the V600 RFID System Intelligent Flag III, including the features and system configuration.

***Section 2*** provides specifications and performance details for Amplifiers, Sensors, and Data Carriers.

***Section 3*** provides transmission specifications, including distances, ranges, and times.

***Section 4*** explains how to install Intelligent Flag III Amplifiers, Sensors, and Data Carriers.

***Section 5*** presents the timing charts and operation outlines for Intelligent Flag Amplifiers when communicating with a host device. Write a communications program for the host according to the timing charts shown in this section.

***Section 6*** provides information on the chemical resistance of Sensors and Data Carriers.

The Appendices provide information on accessories, I/O allocation, and multi-vendor applications.

**⚠ WARNING**

Failure to read and understand the information provided in this manual may result in personal injury or death, damage to the product, or product failure. Please read each section in its entirety and be sure you understand the information provided in the section and related sections before attempting any of the procedures or operations given.

# SECTION 1
# Introduction

This section provides a general introduction to the V600 RFID System Intelligent Flag III, including the features and system configuration.


1-1 Features . . . . . 2
1-2 Models . . . . . 3
1-3 System Configuration . . . . . 3
1-4 Overview of System Operation . . . . . 5

# 1-1 Features

The Intelligent Flag III provides innovative electronic ID flags which replace conventional mechanical flags and Kanbans and also improve quality control and production process control systems. The host interface conforms to DeviceNet (CompoBus/D), one of the global standard buses, and it can be used for constructing a more widely applicable system.

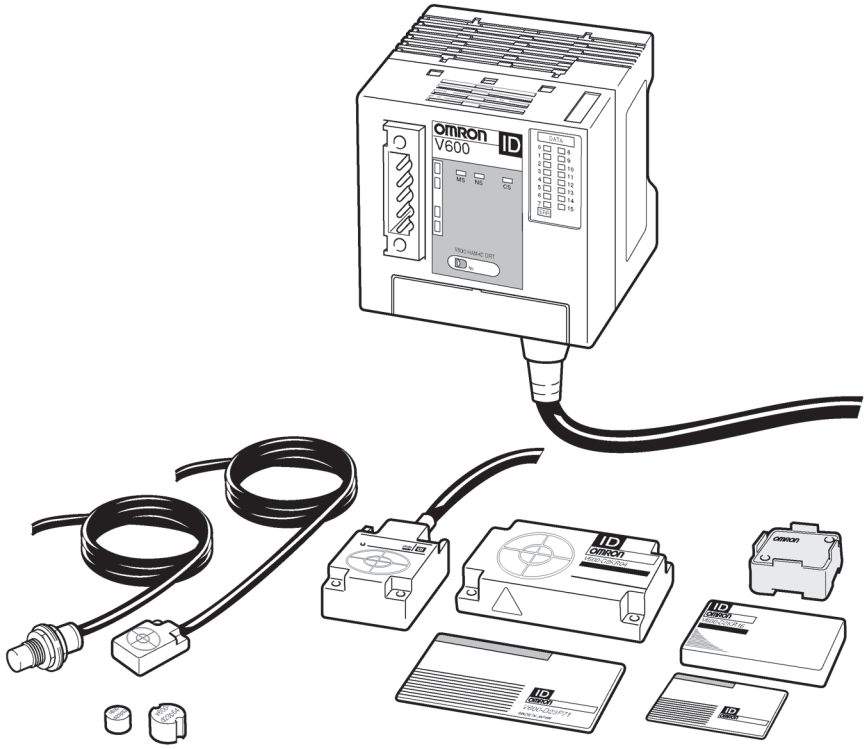


**Builds on Existing Intelligent Flag Series**

The Intelligent Flag III is the successor to the Intelligent Flag and Intelligent Flag II, and retains essential functions such as data reading, data writing, bit setting, and bit clearing.

**More Flexible Applications**

Data reading is now enabled for up to 24 bits, which is 1.5 times more than the existing Intelligent Flag series. Data can now be written in units of either eight or 16 bits. Moreover, access addresses ($00_H$ to $FF_H$) for Data Carriers can now be set from remote Masters.

**Space Saving**

A single read/write head is now equivalent to anywhere from eight to 24 sensors. The space required for flags or Kanbans can be greatly reduced because only one Data Carrier is required.

**Workable With Approximate Positioning**

With the longer transmission distance of up to 100 mm, precise positioning as required for older sensors is not necessary. Furthermore, there is no need to be concerned about mutual interference during installation.

**Trouble-free Maintenance**

Since the Intelligent Flag III has no mechanical parts, such as the cylinders used in conventional mechanical flags, there is no need to be concerned with service life or mechanical failures.

**Compatible with Other OMRON RFID Systems**

The Intelligent Flag III is compatible with V600 Data Carriers, so it can be used for expanding an existing line.

**Conforms to EN Standards**

Sets with Amplifiers, Sensors, and Data Carriers conform to EN standards (EMC instructions: EN50081-2, EN50082-2).

## 1-2 Models

The Intelligent Flag models are shown below. Select the one best suited to the application.

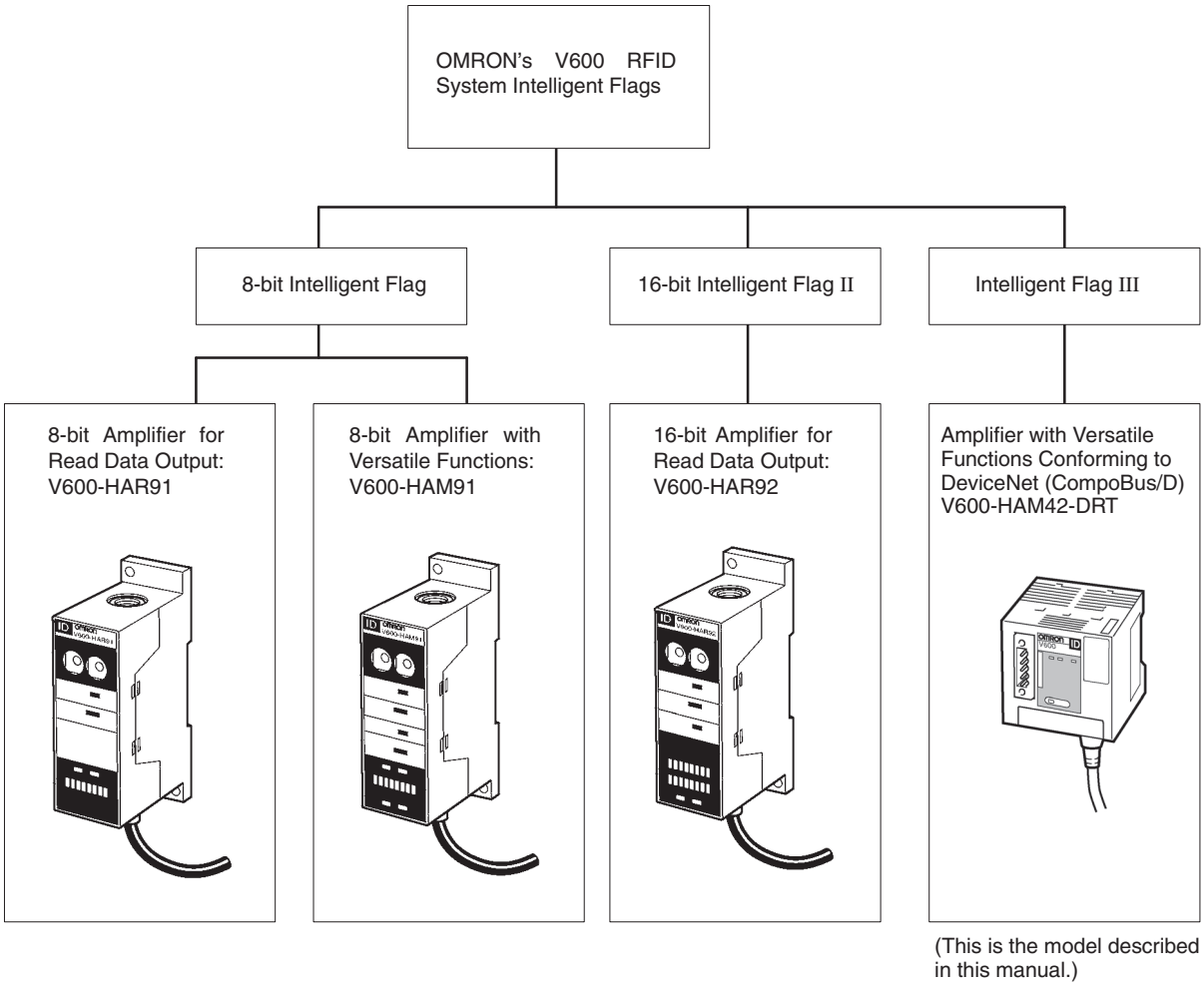


## 1-3 System Configuration

The Intelligent Flag III conforms to DeviceNet (CompoBus/D), an open network, and can be connected with special-purpose connectors as a Slave. Usability has been improved by making the Amplifiers and Sensors also connectible by one-touch connectors.

All V600 Data Carriers can be used.

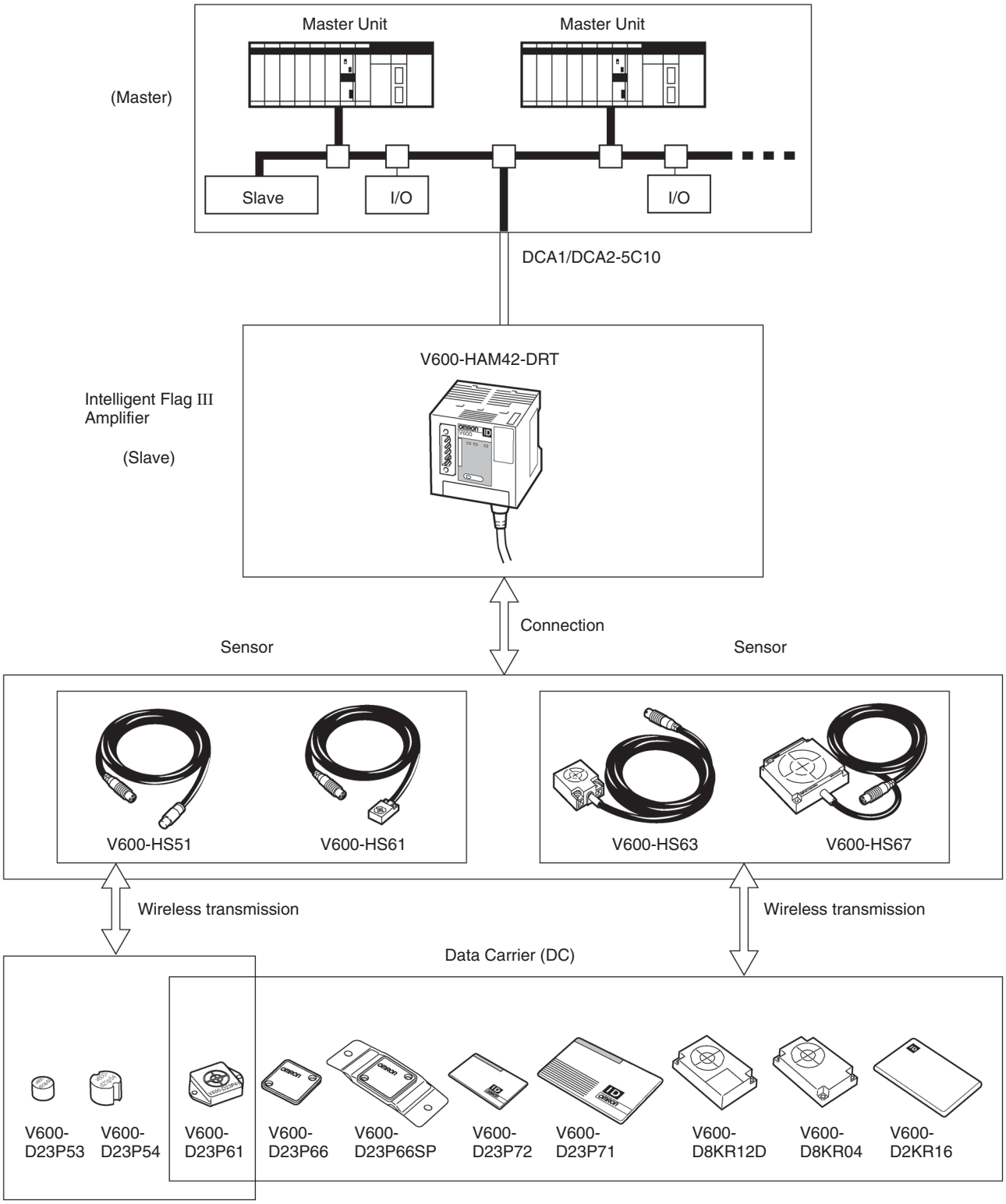


(All V600 Data Carriers can be accessed.)

# 1-4 Overview of System Operation

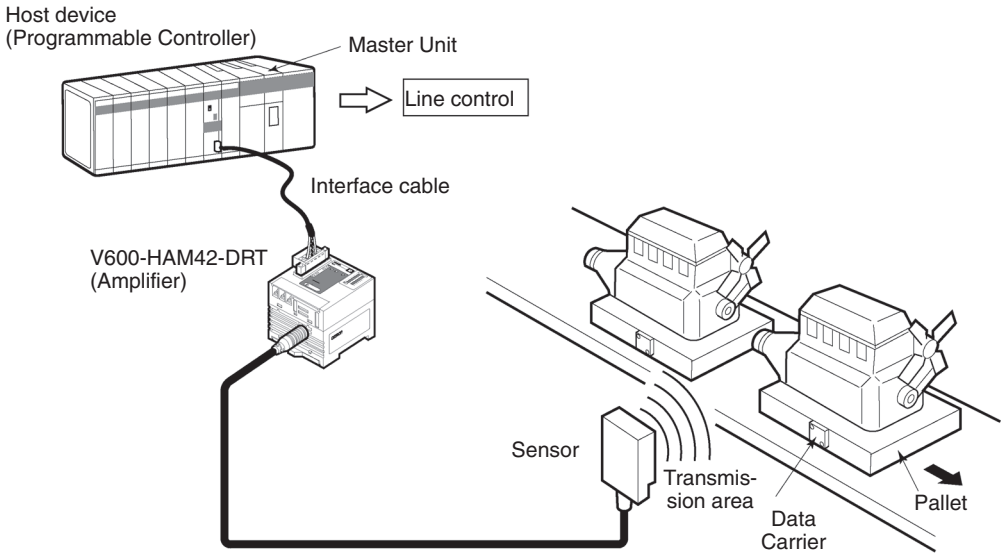


***1, 2, 3...***

1. The host system, such as a Programmable Controller, issues a request to the Amplifier to read or write data from or to a Data Carrier. At this time it also specifies the address of the Data Carrier to be accessed.
2. When the Data Carrier mounted on a pallet comes into the transmission area of the Sensor, data is read from or written to the specified address in the Data Carrier.
3. When data is read, it is sent from the Amplifier to the host system and output by DeviceNet. When data is written, the result of the write processing (i.e., whether the write was successfully completed or not) is sent to the host.
4. Upon receiving the result, the host system performs tasks such as production line control.

# SECTION 2
# Specifications and Performance

This section provides specifications and performance details for Amplifiers, Sensors, and Data Carriers.


2-1 Amplifiers . . . . . 8
2-1-1 Names and Functions of Components . . . . . 8
2-1-2 Specifications . . . . . 13
2-1-3 I/O Specifications . . . . . 13
2-1-4 Dimensions . . . . . 17
2-2 Sensors . . . . . 18
2-2-1 Specifications . . . . . 18
2-2-2 Dimensions . . . . . 19
2-3 Data Carriers (EEPROM, Without Battery) . . . . . 21
2-3-1 Specifications and Dimensions . . . . . 21
2-3-2 Memory Map . . . . . 24
2-3-3 Write Protect Function . . . . . 25
2-4 Data Carriers (SRAM, With Built-in Battery) . . . . . 26
2-4-1 Specifications and Dimensions . . . . . 26
2-4-2 Memory Map . . . . . 28
2-4-3 Write Protect Function . . . . . 29
2-4-4 Battery Service Life . . . . . 30

# 2-1 Amplifiers

## 2-1-1 Names and Functions of Components

### Component Names

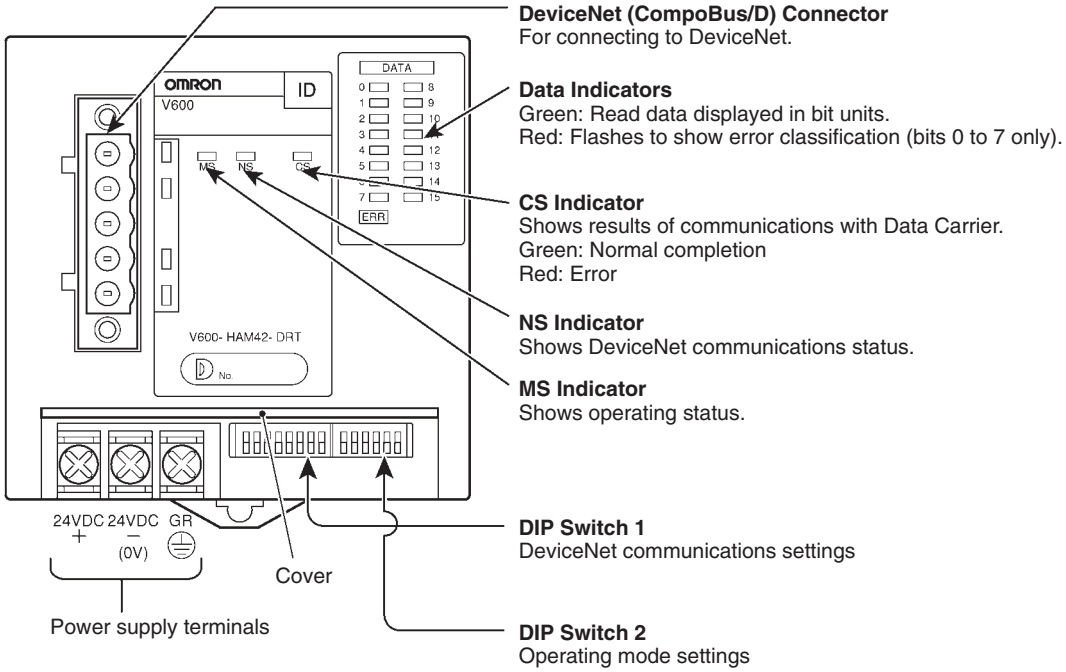


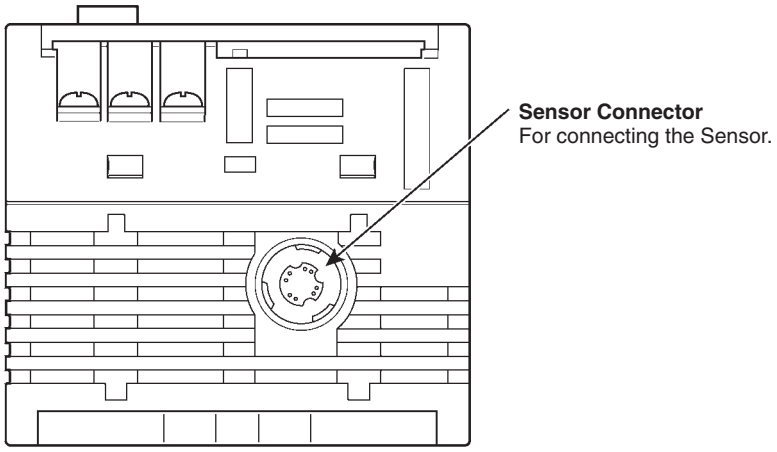

**DeviceNet Connector**

An XW4B-05C1-H1-D COMBICON screw plug is provided for the cable end at the Unit.

Connector (Plug)

| Wire color | Signal classification |
|---|---|
| Red | Power supply cable, + side (V+) |
| White | Communications data high side (CAN H) |
| --- | Shield |
| Blue | Communications data low side (CAN L) |
| Black | Power supply cable, – side (V–) |

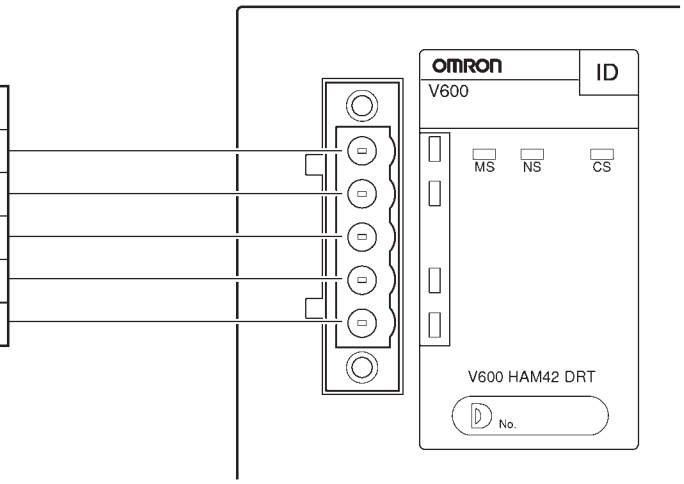


**Note** For details regarding plugs and cables, refer to the *CompoBus/D (DeviceNet) Operation Manual (W267)*.

**Indicators**

| Name | Function | Contents | |
|---|---|---|---|
| Data indicator | Data 0 to 7 | Green lit | 16-bit indicators for data 0 to 7. |
| | Error | Red flashing | Shows error classification. |
| | Data 8 to 15 | Green lit | 16-bit indicators for data 8 to 15. |
| CS indicator | Communications status | Green lit | Data Carrier read/write normal completion |
| | | Red lit | Data Carrier read/write error |
| NS indicator | Network status | Green lit | Communications connection completed. |
| | | Green flashing | Communications not connected. |
| | | Red lit | Fatal communications error |
| | | Red flashing | Nonfatal communications error |
| | | Not lit | Power supply OFF. |
| MS indicator | Machine status | Green lit | Normal |
| | | Green flashing | Not set |
| | | Red lit | Fatal malfunction |
| | | Red flashing | Nonfatal malfunction |
| | | Not lit | Power supply OFF. |

**DIP Switch 1**

This DIP switch is used to make the DeviceNet (CompoBus/D) communications settings. To make the settings, first lift the cover.

DIP Switch 1

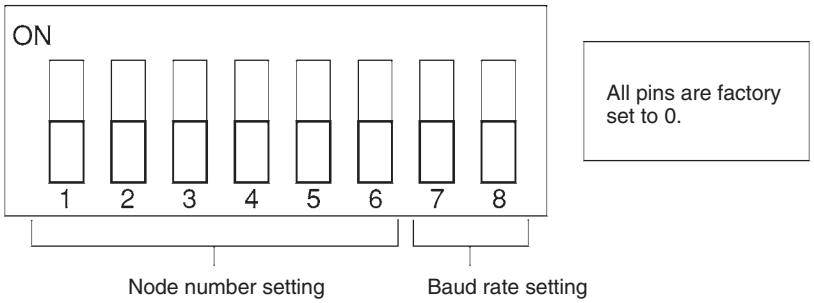

**Node Number Setting**

Set the node number with pins 1 to 6. The node number can be set from 00 to 63.

| Node number | DIP switch 1 pins | | | | | |
|---|---|---|---|---|---|---|
| | 1 | 2 | 3 | 4 | 5 | 6 |
| 00 | OFF | OFF | OFF | OFF | OFF | OFF |
| 01 | ON | OFF | OFF | OFF | OFF | OFF |
| 02 | OFF | ON | OFF | OFF | OFF | OFF |
| 03 | ON | ON | OFF | OFF | OFF | OFF |
| 04 | OFF | OFF | ON | OFF | OFF | OFF |
| to | : | : | : | : | : | : |
| 61 | ON | OFF | ON | ON | ON | ON |
| 62 | OFF | ON | ON | ON | ON | ON |
| 63 | ON | ON | ON | ON | ON | ON |

**Baud Rate Setting**

Set the baud rate with pins 7 and 8. Any of the following three rates can be set: 125 Kbps, 250 Kbps, or 500 Kbps.

| Baud rate | DIP switch 1 pins | |
|---|---|---|
| | 7 | 8 |
| 125 Kbps | OFF | OFF |
| 250 Kbps | ON | OFF |
| 500 Kbps | OFF | ON |
| Cannot be set. | ON | ON |

**Note**

1. Set the same baud rate for all of the nodes (Masters and Slaves) on the network. If a Slave's baud rate is different from the Master's, not only can the Slave's communications not be referenced, but communications errors may occur for communications between correctly set nodes.
2. Be sure to turn OFF the power supply before making DIP switch settings.

**DIP Switch 2**

This DIP switch is used to set the operating mode. To make the setting, first lift the cover.

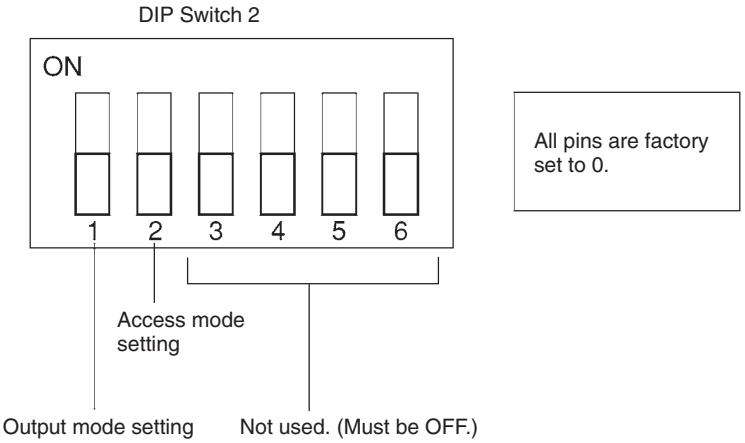


**Output Mode Setting**

This pin is used to set the time for outputting the results following communications with the Data Carrier.

| Output mode | DIP switch 2, pin 1 |
|---|---|
| 100 ms | OFF |
| 500 ms | ON |

**Access Mode Setting**

This pin sets the mode for beginning communications with the Data Carrier. For beginning communications by receiving synchronized inputs from Sensors, use the SYNC mode. For beginning communications automatically by waiting for the Data Carrier to come into range without synchronous inputs, use the AUTO mode. Select either of these modes according to the application.

| Access mode | DIP switch 2, pin 2 |
|---|---|
| AUTO mode | OFF |
| SYNC mode | ON |

**Note** Be sure to turn OFF the power supply before making DIP switch settings.

**Sensor Connector**

The sensor connector is for connecting V600-HS51, V600-HS61, V600-HS63, or V600-HS67 Sensors.

**Power Supply Terminals**

These terminals are for connecting the power supply and protective conductor terminal.

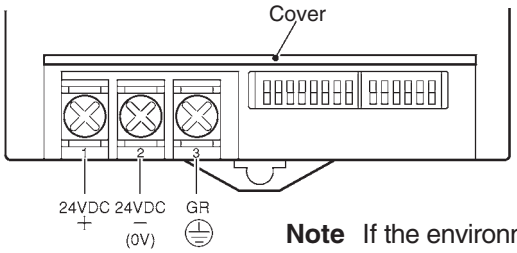


| No. | Name | Function |
|---|---|---|
| 1 | 24 VDC + | Input terminals for 24-VDC power supply |
| 2 | 24 VDC – (0 V) | |
| 3 | GR ⏚ | Protective conductor terminal |

**Note** If the environment has a large amount of noise, ground the GR terminal to 100 Ω or less. Do not use the same ground wire for any other devices. If the ground wire is shared with another device, there will be a greater chance of incurring adverse effects.

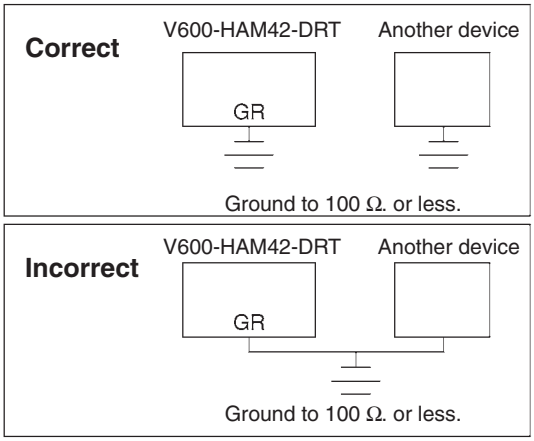


**Functions**

The V600-HAM42-DRT Amplifier has both read and write functions.

With the read function, 24 bits in three bytes from the address specified in the Data Carrier can be read.

There are three write modes: BYTE, BIT SET, and BIT CLEAR. In BYTE mode, 8-bit (1-byte) data is written. In BIT SET mode, particular bits are turned ON (1). In BIT CLEAR mode, particular bits are turned OFF (0). This write function is the same as that of mechanical flags.

Either 16 bits (2 bytes) or 8 bits (one byte) can be selected as the write range. Toggling between read and write is executed by turning ON the bit (WTBYTE signal) assigned by DeviceNet (CompoBus/D).

**Read Function**

***1, 2, 3...***

1. Three bytes of data (24 bits) is read from the Data Carrier, beginning from the address specified by the address input. The read data is output with the data output signal.

2. The NORMAL output signal is turned ON after the data is output.
3. When data in the Data Carrier fails to be read normally, the ERROR output turns ON at the same time as the error classification is output with the data output signal.

**Write Function**

The write function has the following three modes:

**1. BYTE Mode**

***1, 2, 3...***

1. Data entered with the data input signal (16/8 bits) is written to the Data Carrier in the area specified by the address input,16/8 bit switch input, and write area input.
2. After write processing is complete, the normal termination output signal NORMAL is turned ON.
3. When data fails to be written normally to the Data Carrier, the ERROR output turns ON at the same time as the error classification is output with the data output signal.

**2. BIT SET Mode**

***1, 2, 3...***

1. Only the bits that are turned ON by the data input signal (16/8 bits) are set in the area specified by the address input,16/8 bit switch input, and write area input.
2. After write processing is complete, the normal termination output signal NORMAL is turned ON.
3. When data fails to be written normally to the Data Carrier, the ERROR output turns ON at the same time as the error classification is output with the data output signal.

**3. BIT CLEAR Mode**

***1, 2, 3...***

1. Only the bits that are turned ON by the data input signal (16/8 bits) are cleared to 0 in the area specified by the address input,16/8 bit switch input, and write area input.
2. After write processing is complete, the normal termination output signal NORMAL is turned ON.
3. When data fails to be written normally to the Data Carrier, the ERROR output turns ON at the same time as the error classification is output with the data output signal.

## 2-1-2 Specifications

### General Specifications

| Item | Specifications |
|---|---|
| Number of Master words | Input: 2; output: 2 (total: 4 words) |
| Number of Sensor connections | 1 channel |
| Communications power supply voltage | 11 to 25 VDC (provided from communications connector) |
| Internal circuit power supply voltage | 18 to 26.4 VDC |
| Internal current consumption | Communications power supply: 40 mA max.<br>Internal circuit power supply: 150 mA max. |
| Noise immunity | Internal circuit power supply normal ±600 V<br>Internal circuit power supply common: ±1,500 V |
| Dielectric strength | 50/60 Hz at 500 VAC for 1 minute; leakage current 10 mA max. |
| Vibration resistance | 10 to 55 Hz, 1.5-mm amplitude, with 4 sweeps of 8 min each in 3 directions |
| Shock resistance | 294 $m/s^2$ (approx. 30G), 6 times each in 3 directions |
| Ambient temperature | Operating: 0°C to 55°C (with no icing)<br>Storage: –25°C to 65°C |
| Ambient humidity | Operating: 35% to 85% (with no condensation) |
| Degree of protection | IEC60529 IP20 (built-in structure) |
| Mounting method | DIN track or direct mounting using accessory fittings (M4 screws) |
| External dimensions | 65×65×60 (mm) |
| Weight | Approx. 150 g |

### Applicable Sensors

| Model |
|---|
| V600-HS51 |
| V600-HS61 |
| V600-HS63 |
| V600-HS67 |

### Applicable Standards

| Standards |
|---|
| EN50081-2 |
| EN50082-2 |

**Note** These standards apply to the EMC regulations in the EC Directives when the V600-HS63 Sensor (2m) is used.

## 2-1-3 I/O Specifications

The V600-HAM42-DRT occupies 32 input bits (2 words) and 32 output bits (2 words) of the Programmable Controller. The particular words occupied (word X and word Y) vary according to the Master (model and operating mode) and the node number set by the V600-HAM42-DRT DIP switch.

### Allocated I/O Words

| Point | Input (IN) | |
|---|---|---|
| | Word X | Word (X+1) |
| 0 | ID0 | ADDR0 |
| 1 | ID1 | ADDR1 |
| 2 | ID2 | ADDR2 |
| 3 | ID3 | ADDR3 |
| 4 | ID4 | ADDR4 |
| 5 | ID5 | ADDR5 |
| 6 | ID6 | ADDR6 |
| 7 | ID7 | ADDR7 |
| 8 | ID8 | WT_MODE1 |
| 9 | ID9 | WT_MODE2 |
| 10 | ID10 | WT_BYTE |
| 11 | ID11 | WT_AREA |
| 12 | ID12 | Reserved. (See note 1.) |
| 13 | ID13 | Reserved. (See note 1.) |
| 14 | ID14 | READ/WRITE |
| 15 | ID15 | $\overline{\text{INHIBIT}}$/TRG |

| Point | Output (OUT) | |
|---|---|---|
| | Word Y | Word (Y+1) |
| 0 | OD0 | EXT OD16 |
| 1 | OD1 | EXT OD17 |
| 2 | OD2 | EXT OD18 |
| 3 | OD3 | EXT OD19 |
| 4 | OD4 | EXT OD20 |
| 5 | OD5 | EXT OD21 |
| 6 | OD6 | EXT OD22 |
| 7 | OD7 | EXT OD23 |
| 8 | OD8 | Not used. |
| 9 | OD9 | Not used. |
| 10 | OD10 | Not used. |
| 11 | OD11 | Not used. |
| 12 | OD12 | Not used. |
| 13 | OD13 | ERROR |
| 14 | OD14 | NORMAL |
| 15 | OD15 | HS |

**Note** 1. Reserved inputs must be used as 0.

2. Refer to *Appendix B I/O Allocations* for examples of I/O allocations. For details, refer to the *CompoBus/D (DeviceNet) Operation Manual (W267)*.

### Signal Functions

| Signal | Name | Function |
|---|---|---|
| ID0 to ID15 | Data Input | Input write data to the Data Carrier. |
| OD0 to OD15 | Data Output | Output read data from the Data Carrier. The data indicator is lit during output. |
| EXT OD 16 to 23 | Extension Data Output | Output read data from the Data Carrier. There is no data indicator for these outputs. |
| ADDR0 to ADDR7 | Address Input | Specify start address for reading or writing. |
| $\overline{\text{INHIBIT}}$/TRG | $\overline{\text{INHIBIT}}$ Input/Trigger Input | Inputs the $\overline{\text{INHIBIT}}$ signal when in AUTO mode.<br>$\overline{\text{INHIBIT}}$ signal 0: No communication with the Data Carrier.<br>$\overline{\text{INHIBIT}}$ signal 1: Communication with the Data Carrier. |
| | | Inputs the TRG signal when in SYNC mode.<br>When the TRG signal is input, communication with the Data Carrier will start. |
| READ/WRITE | R/W Switching Input | Switches between READ and WRITE.<br>When this bit is OFF (0), data is read from the Data Carrier.<br>When this bit is ON (1), data is written to the Data Carrier. |
| WT_MODE1 | Write Mode 1 Input | Switches between bytes and bits for WRITE operations.<br>When this bit is OFF (0), data is written in byte units.<br>When this bit is ON (1), data is written in bit units. |
| WT_MODE2 | Write Mode 2 Input | Switches between BIT SET and BIT CLEAR for WRITE operations.<br>When this bit is OFF (0), BIT SET is performed.<br>When this bit is ON (1), BIT CLEAR is performed. |
| WT_BYTE | 16/8 Bit Switching Input | Switches between 16-bit and 8-bit data for WRITE operations.<br>When this bit is OFF (0), 16-bit data is written to the Data Carrier.<br>When this bit is ON (1), 8-bit data is written to the Data Carrier. |
| WT_AREA | Write Area Input | Switches between ID0 to ID7 and ID8 to ID15 for 8-bit WRITE BYTE operations.<br>When this bit is OFF (0), the data in ID0 to ID7 is written to the Data Carrier.<br>When this bit is ON (1), the data in ID8 to ID15 is written to the Data Carrier. |
| HS | HS Output | Controls $\overline{\text{INHIBIT}}$/TRG input signal handshaking. Becomes “1” when $\overline{\text{INHIBIT}}$/TRG input is received, and “0” when cleared. The response time depends on network conditions (baud rate, number of nodes, Master settings, etc.). Create a program so that the host device waits for this signal to turn ON before clearing the $\overline{\text{INHIBIT}}$/TRG input. |
| NORMAL | Normal Output | This signal is output when communications with the Data Carrier are completed normally for READ or WRITE operations. For READ operations, read the data in OD0 to OD15 and EXT OD16 to EXT OD23 with the rising edge of this signal. |
| ERROR | Error Output | This signal is output when communications with the Data Carrier are not completed normally for READ or WRITE operations. |

| ⚠ CAUTION |
|---|
| Be sure to observe the following precautions. |
| **Power Supply Voltage**<br>Do not use an AC (100 VAC) power supply or any voltage exceeding the rated voltage. Unsuitable power supplies may cause the equipment to explode or burn. |
| **Load Short-circuiting**<br>Do not short-circuit the load or connect it to the power supply. Doing either of these may cause the equipment to explode or burn |
| **Wiring**<br>Be careful not to make wiring mistakes such as reversing the polarity of the power supply. Wiring mistakes may cause the equipment to explode or burn. |
| **Operating Environment**<br>Do not use the equipment in locations subject to corrosive, explosive or flammable gases, or dust (especially metallic dust). |
| **Construction**<br>Do not remove the product's outer case. Doing so may adversely affect performance.<br>Be careful not to allow metallic dust to enter the product's ventilation ducts. Metallic dust can cause malfunctioning, damage to the equipment, or combustion. |
| **EC Directives**<br>To conform to EC Directives, connect a ferrite core (ZCAT2035-0930 by TDK) as shown below. This regulation applies to only the V600-HS63 Sensor (2-m cable). Connect the ferrite core to the end of the Sensor's cable (near the connector).<br> 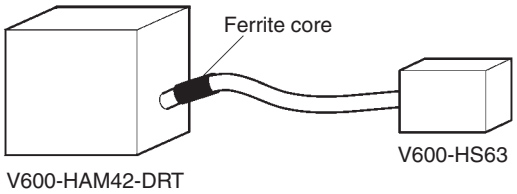 <br> |

## 2-1-4 Dimensions

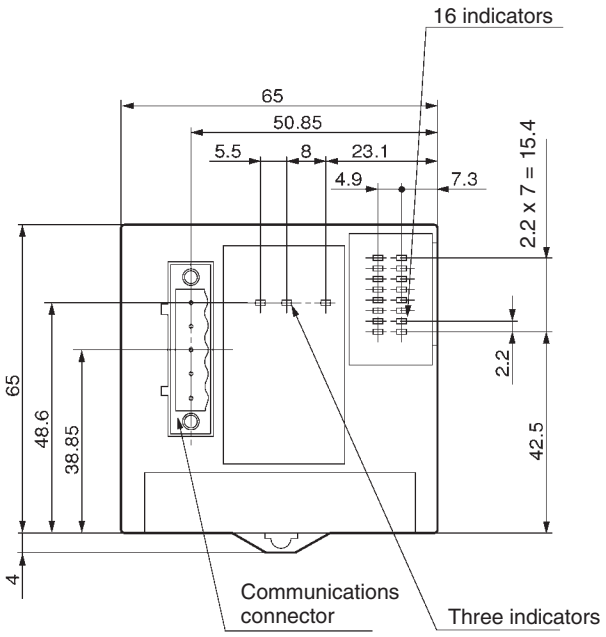


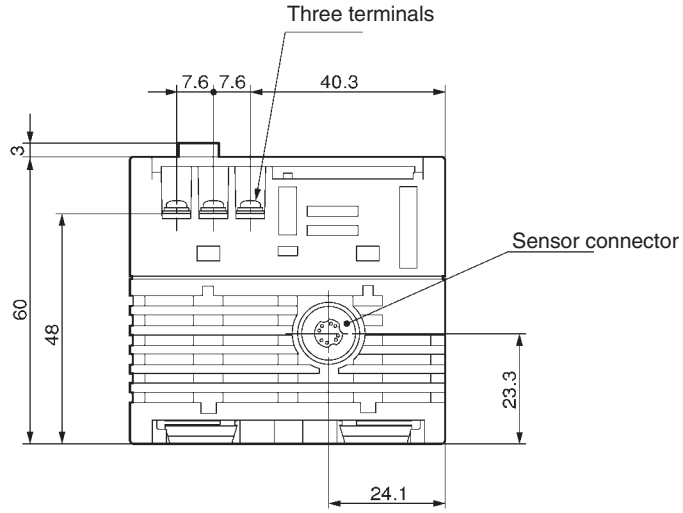


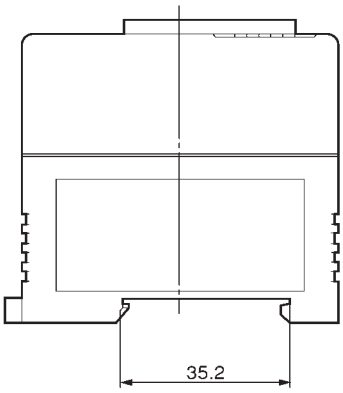


Metal Fitting

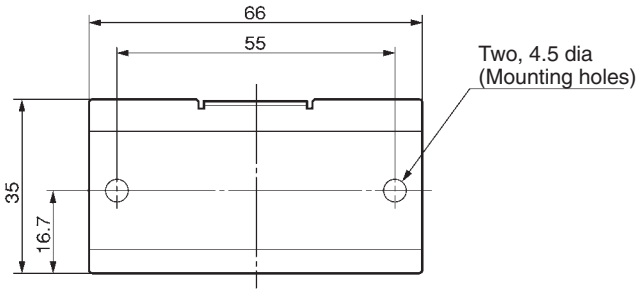


Mounting Hole Dimensions

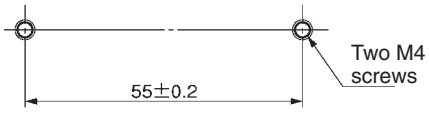

# 2-2 Sensors

There are four kinds of Sensors that can be used with the Intelligent Flag III. Select a Sensor to suit the application.

## 2-2-1 Specifications

| Item | V600-HS51 | V600-HS61 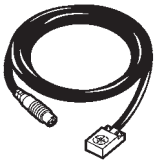 | V600-HS63 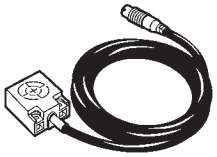 | V600-HS67 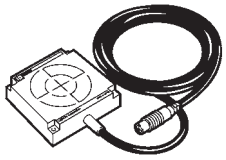 |
|---|---|---|---|---|
| Transmission frequency | 530 kHz | | | |
| Ambient temperature | Operating: –10°C to 60°C<br>Storage: –25°C to 75°C | | Operating: –10°C to 70°C<br>Storage: –25°C to 75°C | |
| Ambient humidity | 35% to 95% | | | |
| Insulation resistance | 50 MΩ (at 500 VDC) between cable terminal and case | | | |
| Dielectric strength | 1,000 VAC, 50/60 Hz for 1 min between cable terminal and cable | | | |
| Degree of protection | IEC60529 IP67 | | | |
| Vibration resistance | Destruction: 10 to 500 Hz, 2-mm double amplitude, with 3 sweeps of 11 min each in 3 directions | | Destruction: 10 to 2,000 Hz, 3-mm double amplitude, with 2 sweeps of 15 min each in 3 directions | |
| Shock resistance | Destruction: 981 m/s$^2$ (approx. 100G), 3 times each in 3 directions (18 times total) | | Destruction: 490 m/s$^2$ (approx. 50G), 3 times each in 3 directions (18 times total) | |
| Cable length | 2 m (fixed) | | | |
| Wireless transmission error direction | 16-bit CRC (Cyclic Redundancy Check) in both directions | | | |
| Indicator | --- | | Power: green | |
| Weight | Approx. 70 g | | Approx. 190 g | Approx. 540 g |

## 2-2-2 Dimensions

**V600-HS51**

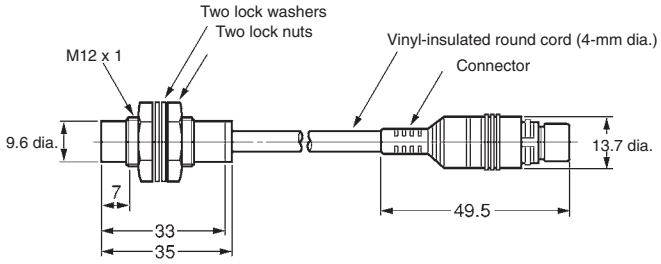


Case: Brass
Transmission face: ABS resin
Filter: Epoxy resin
Cable: PVC (oil-resistant)

**V600-HS61**

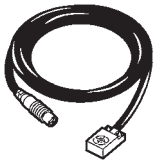

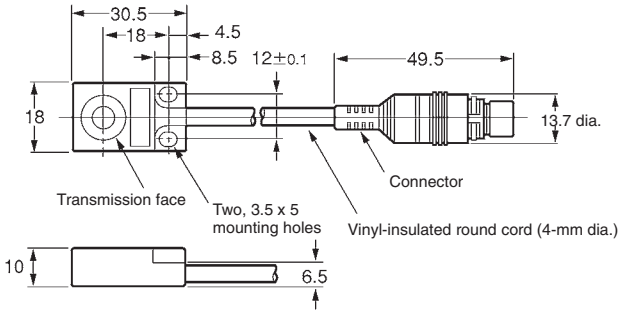


Case: ABS resin
Filter: Epoxy resin
Cable: PVC (oil-resistant)

**V600-HS63**

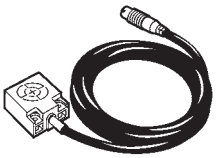

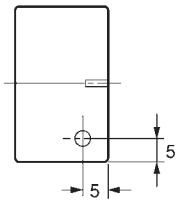


Power indicator (Green)

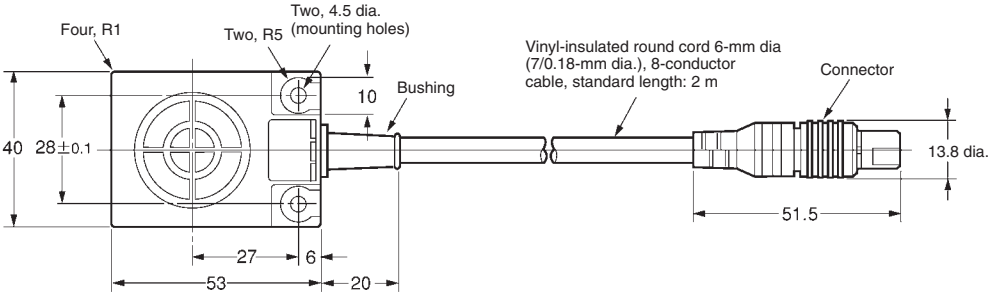


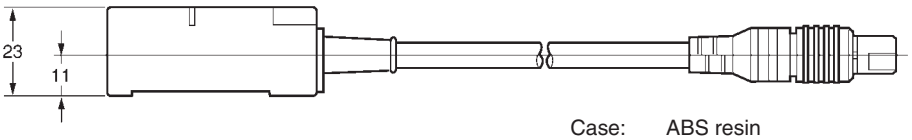


Case: ABS resin
Filter: Epoxy resin
Cable: PVC (oil-resistant)

**V600-HS67**

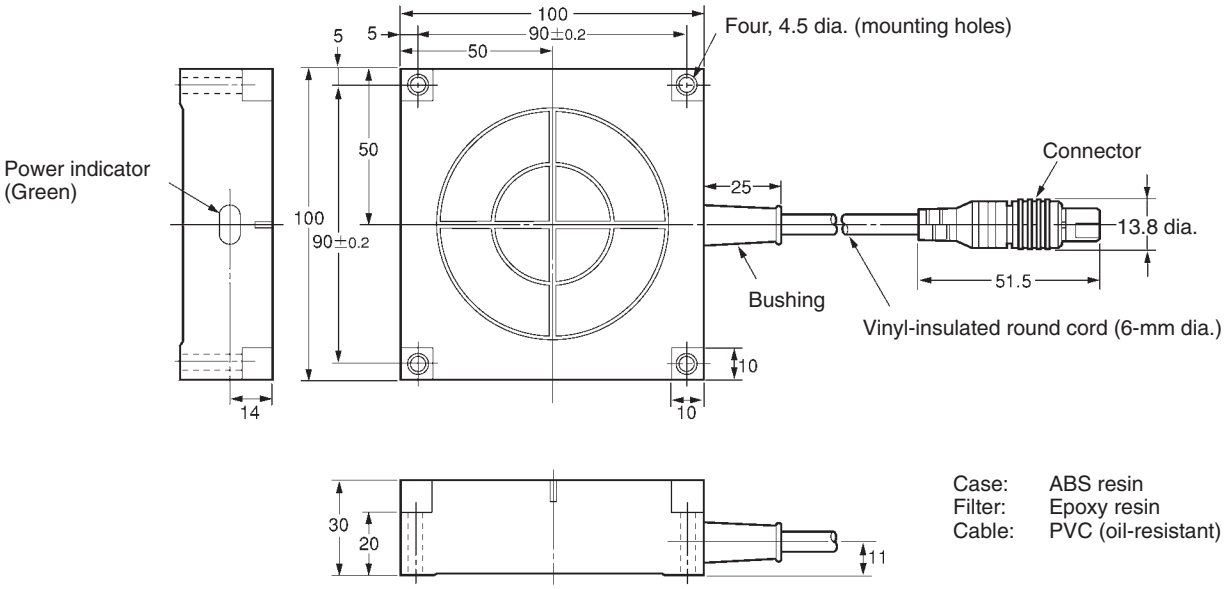


Case: ABS resin
Filter: Epoxy resin
Cable: PVC (oil-resistant)

# 2-3 Data Carriers (EEPROM, Without Battery)

## 2-3-1 Specifications and Dimensions

### V600-D23P71/V600-D23P72

| Item | Model | |
|---|---|---|
| | V600-D23P71 | V600-D23P72 |
| Memory capacity | 254 bytes | |
| Memory type | EEPROM (electrically erasable programmable random access memory) | |
| Data hold time | 10 years (Data will be maintained for 10 years after it is written.) | |
| Data write capacity | –10°C to 40°C: 300,000 times per address<br>–10°C to 70°C: 100,000 times per address | |
| Error detection | 16-bit CRC error detection is used in both directions of transmission. | |
| Operating temperature | Data retention: –20°C to 110°C; read/write: –10°C to 70°C | |
| Storage temperature | –20°C to 110°C | |
| Operating humidity | 35% to 95% RH | |
| Degree of protection | Meets or exceeds IEC60529 IP66. | |
| Vibration resistance | 10 to 2,000 Hz, 1.5 mm in each direction; acceleration: 300 m/s$^2$ (about 30 G); 30 minutes each in three axis directions, 90 minutes total | |
| Shock resistance | 1,000 m/s$^2$ (about 100 G) three times each in X, Y, Z directions, total 18 times | |
| Weight (approximate) | 15 g | 5 g |

**V600-D23P71**

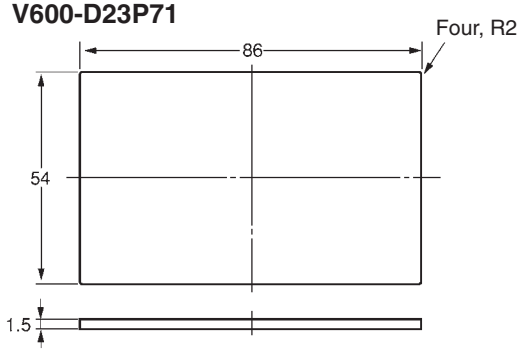


**V600-D23P72**

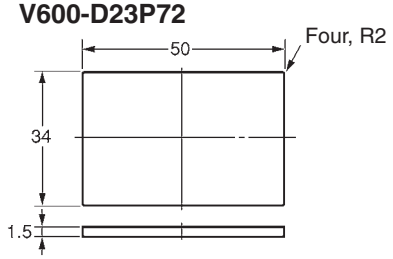


| | |
|---|---|
| Material | Glass epoxy resin |
| Exterior | Polyeurethane resin |

**V600-A84**

Mounting holes (Two, 3.2 dia.) Use M3 plain-head screws.
Specified ultrasonic welder must be used.

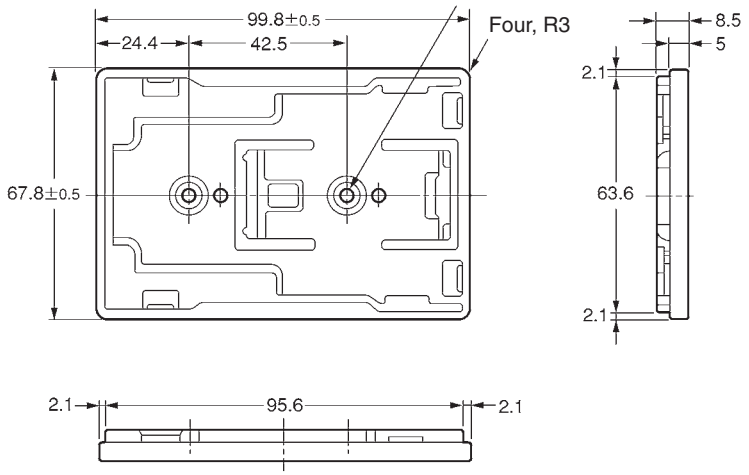


| | |
|---|---|
| Material | Polypropylene resin |

## V600-D23P66

| Item | V600-D23P66 |
|---|---|
| Memory capacity | 254 bytes |
| Memory type | EEPROM (electrically erasable programmable random access memory) |
| Data hold time | 10 years (Data will be maintained for 10 years after it is written.) |
| Data write capacity | –20°C to 40°C: 300,000 times per address<br>–20°C to 70°C: 100,000 times per address |
| Error detection | 16-bit CRC error detection is used in both directions of transmission. |
| Operating temperature | Data retention: –40°C to 110°C; read/write: –20°C to 70°C |
| Storage temperature | –40°C to 110°C |
| Operating humidity | 35% to 95% RH |
| Degree of protection | Meets or exceeds IEC60529 IP68. (applicable in water at 10 m or less) |
| Vibration resistance | 10 to 2,000 Hz, 1.5 mm in each direction; acceleration: 300 m/s$^2$ (about 30 G); 30 minutes each in three axis directions, 90 minutes total |
| Shock resistance | 1,000 m/s$^2$ (about 100 G) three times each in X, Y, Z directions, total 18 times |
| Weight (approximate) | 6 g |

### V600-D23P66

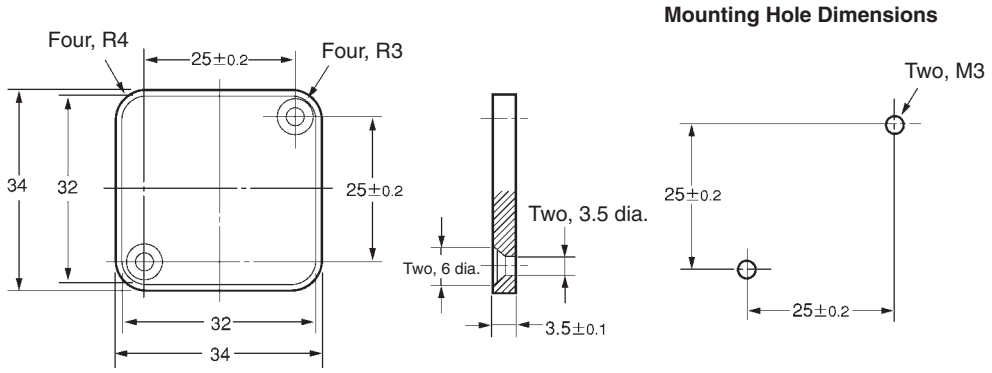


Case material: PPS resin

### V600-A86 (Attachment)

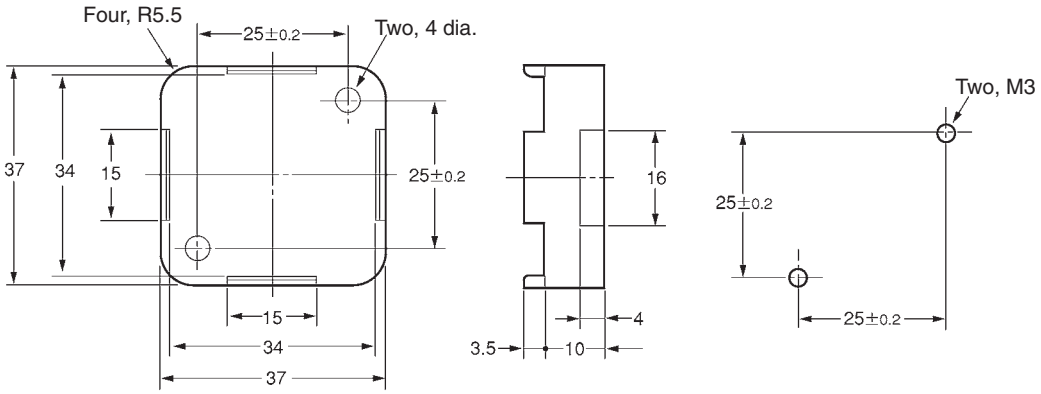


Case material: PPS resin

## V600-D23P66SP

| Item | V600-D23P66SP |
|---|---|
| Memory capacity | 254 bytes |
| Memory type | EEPROM (electrically erasable programmable random access memory) |
| Data hold time | 10 years (Data will be maintained for 10 years after it is written.) |
| Data write capacity | –20°C to 40°C: 300,000 times per address<br>–20°C to 70°C: 100,000 times per address |
| Error detection | 16-bit CRC error detection is used in both directions of transmission. |
| Operating temperature | Data retention: –40°C to 110°C; read/write: –20°C to 70°C |
| Storage temperature | –40°C to 110°C |
| Operating humidity | 35% to 95% RH |
| Degree of protection | Meets or exceeds IEC60529 IP67. |
| Vibration resistance | 10 to 2,000 Hz, 1.5 mm in each direction; acceleration: 300 m/s$^2$ (about 30 G); 30 minutes each in three axis directions, 90 minutes total |
| Shock resistance | 1,000 m/s$^2$ (about 100 G) three times each in X, Y, Z directions, total 18 times |
| Weight (approximate) | 19 g |

**V600-D23P66SP**

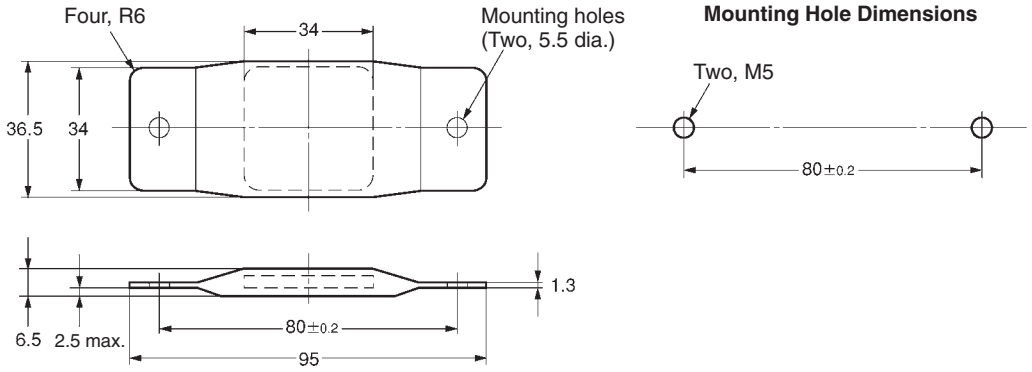


Case material: PFA resin

## V600-D23P61/V600-D23P53/V600-D23P54

| Item | Model | | |
|---|---|---|---|
| | V600-D23P61 | V600-D23P53 | V600-D23P54 |
| Memory capacity | 254 bytes | | |
| Memory type | EEPROM (electrically erasable programmable random access memory) | | |
| Data hold time | 10 years (Data will be maintained for 10 years after it is written.) | | |
| Data write capacity | –25°C to 40°C: 300,000 times per address<br>–25°C to 70°C: 100,000 times per address | | |
| Error detection | 16-bit CRC error detection is used in both directions of transmission. | | |
| Operating temperature | Data retention: –40°C to 85°C; read/write: –25°C to 70°C | | |
| Storage temperature | –40°C to 85°C | | |
| Operating humidity | 35% to 95% RH | | |
| Degree of protection | IEC60529 IP67 | | |
| Vibration resistance | 10 to 2,000 Hz, 1.5 mm in each direction; acceleration: 300 m/s$^2$ (about 30 G); 30 minutes each in three axis directions, 90 minutes total | | |
| Shock resistance | 1,000 m/s$^2$ (about 100 G) three times each in X, Y, Z directions, total 18 times | | |
| Weight (approximate) | 5.8 g | 0.4 g | 1.0 g |

**V600-D23P61**

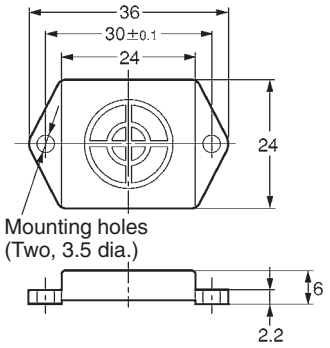


**V600-D23P53**

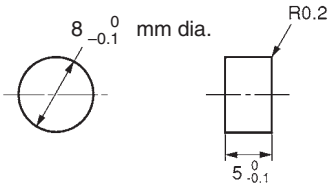


**V600-D23P54**

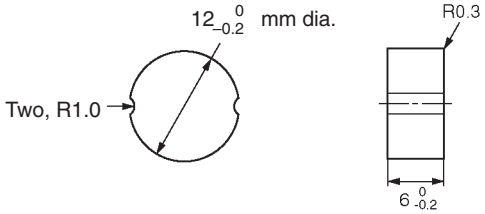


| | |
|---|---|
| Case material | ABS resin |
| Filler | Epoxy resin |

## 2-3-2 Memory Map

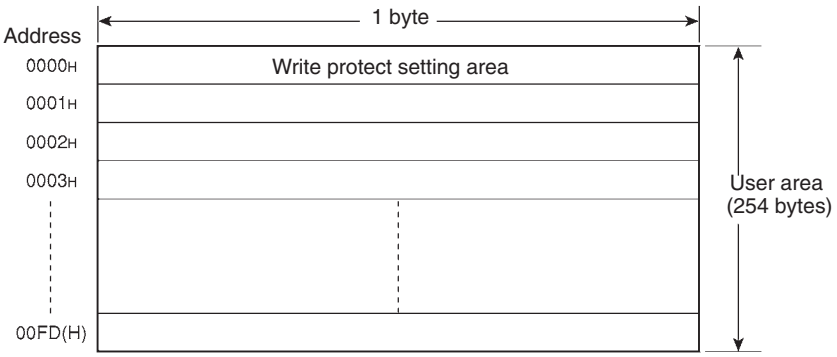


The memory is EEPROM, so there is no limit on the number of times that data can be read or overwritten.

The memory capacity is 254 bytes, including the write protect setting area address, $0000_H$.

## 2-3-3 Write Protect Function

The write protect function protects important data stored in the memory of the Data Carrier, such as product number and model, from being overwritten inadvertently. With this function, the data in a specified memory area can be protected. It is recommended that important data be write-protected as follows:

### Setting the Write Protect Function

The write protect function is set by writing the final address to be protected in address $0000_H$ of the Data Carrier's memory. The status of the most significant bit of address $0000_H$ determines whether or not the write protect function is in effect.

| Address | Bit | | | | | | | |
|---|---|---|---|---|---|---|---|---|
| | 7 | 6 | 5 | 4 | 3 | 2 | 1 | 0 |
| $0000_H$ | YES/NO | End address | | | | | | |

The region specified by the end addresses will be protected when the write protect control bit (most significant bit of address $0000_H$) is ON, as shown in the following table.

| Most significant bit of $0000_H$ | Write Protect Function |
|---|---|
| ON | Data is write-protected. |
| OFF | Data is not write-protected. |

The following addresses can be set for the end address:
End address: $00_H$, $01_H$ to $7F_H$

Address $0080_H$ to $00FD_H$ can therefore not be set as the end address. If the end address is set to $00_H$, however, all addresses from $0001_H$ to $00FD_H$ will be protected.

### Examples

***1, 2, 3...*** 1. The following settings would write-protect addresses $0001_H$ through $0012_H$:

| Address | Bit | | | | | | | |
|---|---|---|---|---|---|---|---|---|
| | 7 | 6 | 5 | 4 | 3 | 2 | 1 | 0 |
| $0000_H$ | 1 | 0 | 0 | 1 | 0 | 0 | 1 | 0 |
| | 9 | | | | 2 | | | |

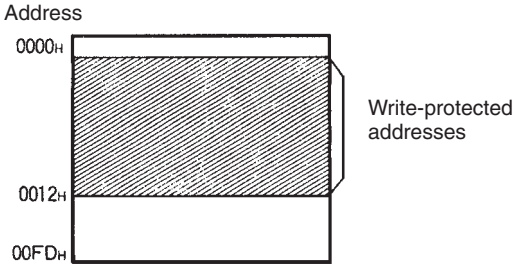


2. The entire memory except address $0000_H$ is write-protected by setting the end address to $00_H$, as shown below.

| Address | Bit | | | | | | | |
|---|---|---|---|---|---|---|---|---|
| | 7 | 6 | 5 | 4 | 3 | 2 | 1 | 0 |
| $0000_H$ | 1 | 0 | 0 | 0 | 0 | 0 | 0 | 0 |
| | 8 | | | | 0 | | | |

(End address set to $00_H$.)

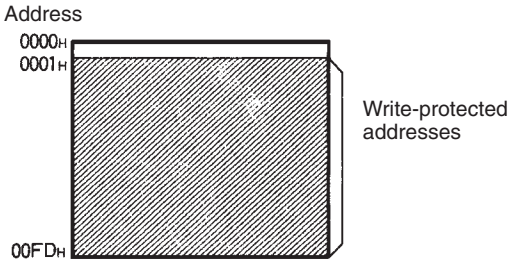


### Canceling Write Protection

To cancel write protection, turn OFF the most significant bit of address $0000_H$. The write protection will be cancelled, and the address set in $0000_H$ will be ignored.

**Note** 1. Address $0000_H$ cannot be write-protected.
2. The first address that is write-protected is always $0001_H$. Always structure the data so that any data that needs to be write protected is written at addresses from $0001_H$ on.

# 2-4 Data Carriers (SRAM, With Built-in Battery)

## 2-4-1 Specifications and Dimensions

### V600-D8KR12D/13/04

| Item | Model | | |
|---|---|---|---|
| | V600-D8KR12D | V600-D8KR13 | V600-D8KR04 |
| Memory capacity | 8 Kbytes | | |
| Memory type | SRAM (static random access memory) | | |
| Battery service life | Refer to the graphs in *2-4-4 Battery Service Life*. | | |
| Number of data read/write conversions | No limit (up to the extent of the battery service life) | | |
| Error detection | 16-bit CRC error detection is used in both directions of transmission. | | |
| Operating temperature | Data retention: –40°C to 70°C; read/write: –25°C to 70°C | | |
| Storage temperature | –40°C to 70°C | | |
| Operating humidity | 35% to 95% RH | | |
| Degree of protection | Meets or exceeds IEC60529 IP67. | | |
| Vibration resistance | 10 to 500 Hz, 1.0 mm in each direction; acceleration: 150 m/s$^2$ (about 15 G); one sweep in each of three axis directions, three sweeps in 11 minutes | | |
| Shock resistance | 1,000 m/s$^2$ (about 100 G) three times each in X, Y, Z directions | | |
| Weight (approximate) | 70 g | 70 g | 160 g |

**V600-D8KR12D**

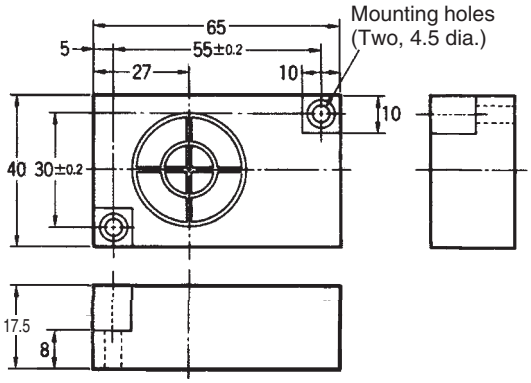


**V600-D8KR13**

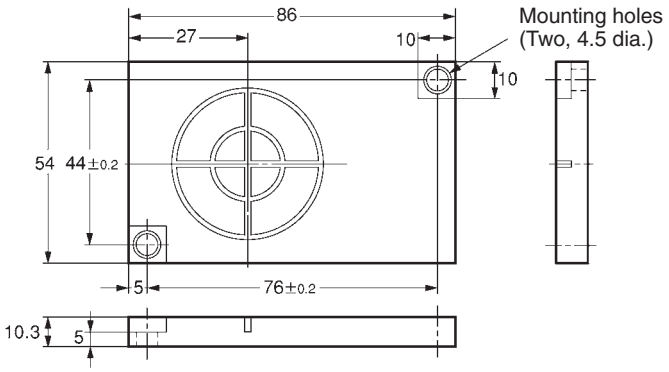


**V600-D8KR04**

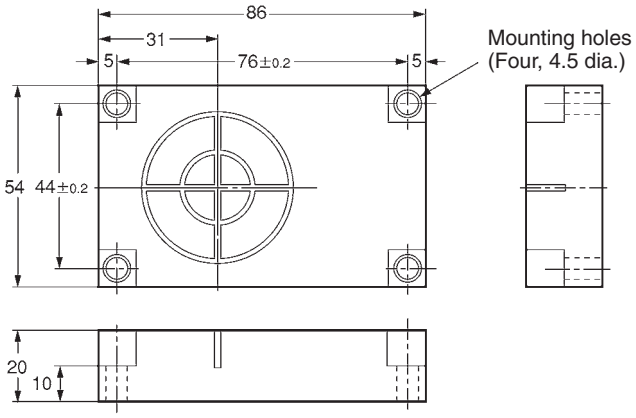


| | |
|---|---|
| Case material | ABS resin |
| Filler | Epoxy resin |

**⚠ WARNING**

The SRAM-type Data Carrier has a built-in lithium battery which can combust or explode if mishandled. Do not disassemble the Data Carrier, or subject it to high pressure or high temperatures (of 100°C or more), or dispose of it by incineration.

## V600-D2KR16

| Item | V600-D8KR16 |
|---|---|
| Memory capacity | 2 Kbytes |
| Memory type | SRAM (static random access memory) |
| Battery service life (See note 1.) | 2 years (replaceable battery) |
| Number of data read/write conversions | No limit (unrelated to battery service life) |
| Error detection | 16-bit CRC error detection is used in both directions of transmission. (CRC: Cyclic Redundancy Check) |
| Operating temperature | Data retention: –15°C to 70°C; read/write: 0°C to 50°C |
| Storage temperature | –15°C to 70°C |
| Operating humidity | 35% to 85% RH |
| Degree of protection (See note 2.) | IEC60529 IP50 |
| Vibration resistance | 10 to 150 Hz, 1.5 mm in each direction; acceleration: 100 m/s$^2$ (about 10 G); for 30 min. each in X, Y, Z directions. |
| Shock resistance | 300 m/s$^2$ (about 30 G) three times each in X, Y, Z directions, total 18 times |
| Weight (approximate) | 15 g |

**Note** 1. This is the battery service life when the battery is used in an environment with an ambient temperature below 25°C. For the relationship between temperature and battery service life, refer to *2-4-4 Battery Service Life*.

2. When the accessory battery replacement cover seal is in place.

**V600-D2KR16**

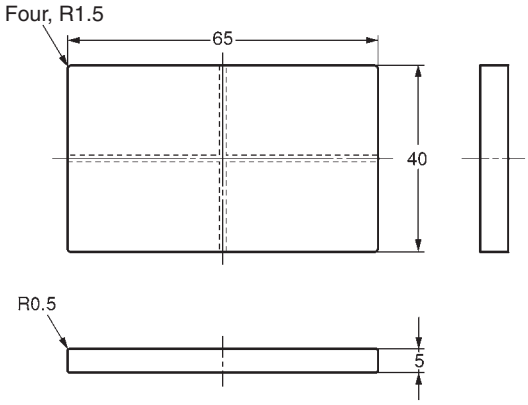


**Special-purpose Holder (V600-A81)**

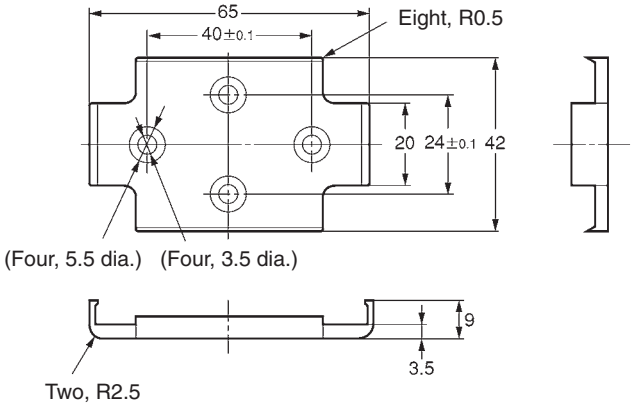


Case material: ABS resin

**⚠ WARNING**

The SRAM-type Data Carrier has a built-in lithium battery which can combust or explode if mishandled. Do not disassemble the Data Carrier, or subject it to high pressure or high temperatures (of 100°C or more), or dispose of it by incineration.

## 2-4-2 Memory Map

The Data Carrier (DC) has a memory area of up to 8 Kbytes. Each address of the memory area specifies one byte. A single byte of data can be written to one address.

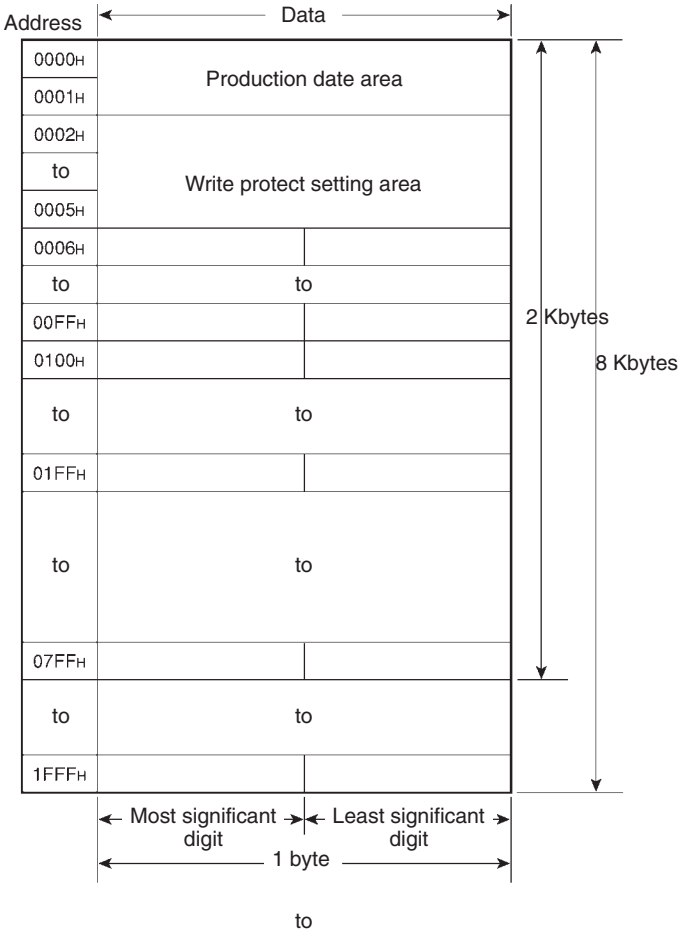


**Production Date Area (Written by Supplier)**

| Address | Bit | | | | | | | |
|---|---|---|---|---|---|---|---|---|
| | 7 | 6 | 5 | 4 | 3 | 2 | 1 | 0 |
| $0000_H$ | Month (second digit) | | | | Month (first digit) | | | |
| $0001_H$ | Year (second digit) | | | | Year (first digit) | | | |

**Note**
1. Address 0000 contains the month of production (March→"03," October→"10").
2. Address 0001 contains the lower two digits of the year (1997→"97").
3. No default data is set for the V600-D2KR16.
4. This area is read only.

The memory is SRAM, so there is no limit on the number of times that data can be read or overwritten.

The memory capacity is 8 Kbytes, and the available addresses are $0000_H$ to $1FFF_H$. The available addresses for the memory capacity of 2 Kbytes are $0000_H$ to $07FF_H$.

The memory contents are preserved by a long-life lithium battery.

## 2-4-3 Write Protect Function

The write protect function protects important data stored in the memory of the Data Carrier, such as product number and model, from being overwritten inadvertently. With this function, the data in a specified memory area can be protected. It is recommended that important data be write-protected as follows:

### Setting the Write Protect Function

The write protect function is set in the four bytes of addresses $0002_H$ through $0005_H$ of the Data Carrier's memory. The status of the most significant bit of address $0002_H$ determines whether or not the write protect function is in effect.

**When Executing the Write Protect Function**

| Address | Bit | | | | | | | |
|---|---|---|---|---|---|---|---|---|
| | 7 | 6 | 5 | 4 | 3 | 2 | 1 | 0 |
| $0002_H$ | YES/ NO | Least significant two digits of start address | | | | | | |
| $0003_H$ | Most significant two digits of start address | | | | | | | |
| $0004_H$ | Most significant two digits of end address | | | | | | | |
| $0005_H$ | Least significant two digits of end address | | | | | | | |

The region specified by the beginning and end addresses will be protected when the write protect control bit (most significant bit of address $0002_H$) is ON, as shown in the following table.

| Most significant bit of $0002_H$ | Write Protect Function |
|---|---|
| ON | Data is write-protected. |
| OFF | Data is not write-protected. |

Area that can be set:
Start address: $0006_H$ to $1FFF_H$
End address: $0006_H$ to $1FFF_H$

### Examples

***1, 2, 3...*** 1. The following settings would write-protect addresses $0015_H$ through $0120_H$ (i.e., the start address to the end addresses):

| Address | Bit | | | | | | | |
|---|---|---|---|---|---|---|---|---|
| | 7 | 6 | 5 | 4 | 3 | 2 | 1 | 0 |
| $0002_H$ | 1 | 0 | 0 | 0 | 0 | 0 | 0 | 0 |
| | 8 | | | | 0 | | | |
| $0003_H$ | 0 | 0 | 0 | 1 | 0 | 1 | 0 | 1 |
| | 1 | | | | 5 | | | |
| $0004_H$ | 0 | 0 | 0 | 0 | 0 | 0 | 0 | 1 |
| | 0 | | | | 1 | | | |
| $0005_H$ | 0 | 0 | 1 | 0 | 0 | 0 | 0 | 0 |
| | 2 | | | | 0 | | | |

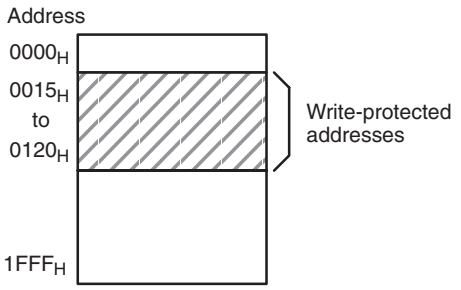


2. To write-protect only 1 byte, set the same address as the start and end addresses (start address = end address).

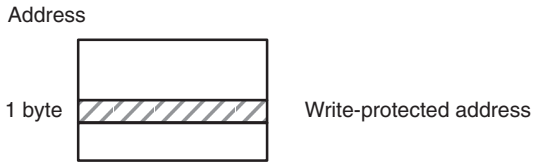

3. If the end address exceeds the last address of the Data Carrier memory (end address > $1FFF_H$), the addresses up to $1FFF_H$ will be write-protected:.

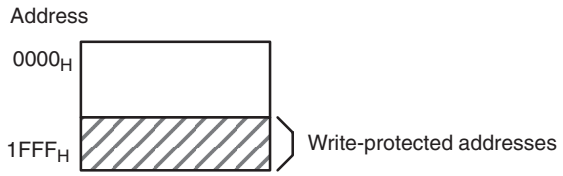


4. If the start address is greater than the end address (start address > end address), the write-protected area will wrap through $0006_H$, so that addresses from $0006_H$ through the end address,and from the start address through $1FFF_H$ will be write-protected.

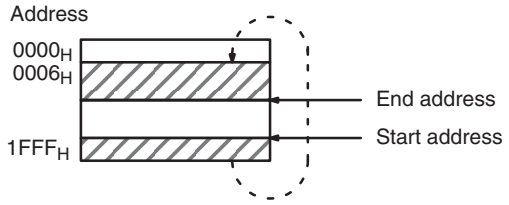


### Canceling Write Protection

To cancel write protection, turn OFF the most significant bit of address $0002_H$. The write protection will be cancelled, and the beginning and end addresses that are set for $0002_H$ to $0005_H$ will be ignored.

## 2-4-4 Battery Service Life

The Data Carrier has a built-in lithium battery that provides power. The service life of the battery depends on the number and size of data transmissions. The graphs below show the relationship between daily number of transmissions and memory size of transmissions and battery service life. (The illustrations shown here are reference examples.)

**V600-D8KR12D**

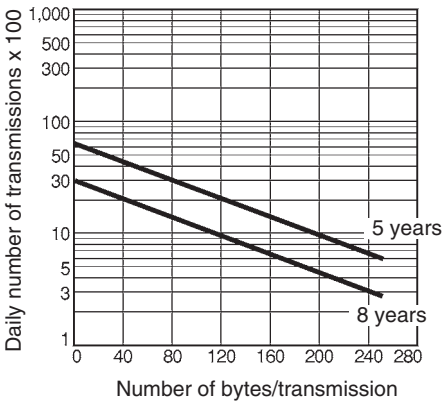


**V600-D8KR13**

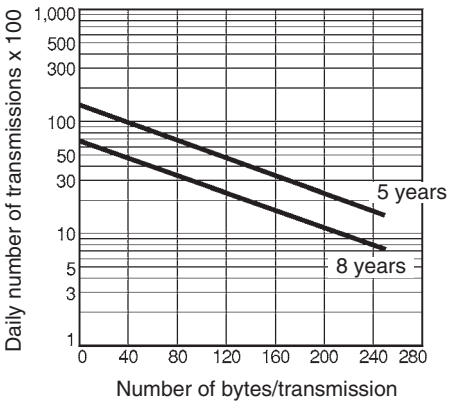


**V600-D8KR04**

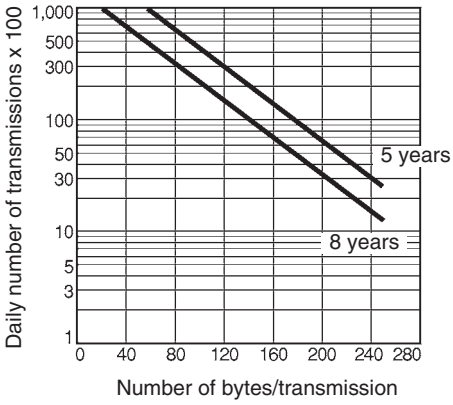


**Note** The preceding graphs show the lowest possible lifetimes for Data Carriers in the temperature range of –10°C to 55°C (14°F to 131°F). Normally, battery life will be shorter at higher ambient temperatures.

With a V600-D8KR12D Data Carrier at 55°C (131°F), the battery life will be eight years when 40 bytes of data are accessed 2,000 times a day, or five years in case of 4,500 times a day.

With a V600-D8KR04 Data Carrier at 55°C (131°F), the battery life will be eight years when 200 bytes of data are accessed 3,000 times a day, or five years in case of 6,500 times a day.

With the Intelligent Flag III, the battery's service life will be greatly shortened if the Data Carrier is repeatedly stopped within the communications area while the AUTO mode is in effect. To prevent this from occurring, either turn OFF the Amplifier's power supply or stop the Sensor's oscillation by turning OFF the $\overline{\text{INHIBIT}}$ input.

The built-in battery will be consumed to the extent shown in the following table if the Data Carrier is stopped in the communications area for one day (24 hours).

| Model | Battery capacity | Consumption per day | Percentage of battery capacity |
|---|---|---|---|
| V600-D8KR12D | 410 mA/h | 1.68 mA/h (0.07 mA/h per hour) | 0.41 % |
| V600-D8KR13 | 1,000 mA/h | | 0.168 % |
| V600-D8KR04 | 1,900 mA/h | | 0.088 % |
| V600-D8KR11 | 1,900 mA/h | | 0.088 % |

**V600-D2KR16**

The battery used for the V600-D2KR16 has a service life of two years at an ambient temperature of 25°C, regardless of the number of access times or R/W bytes.

**Battery Service Life vs. Temperature**

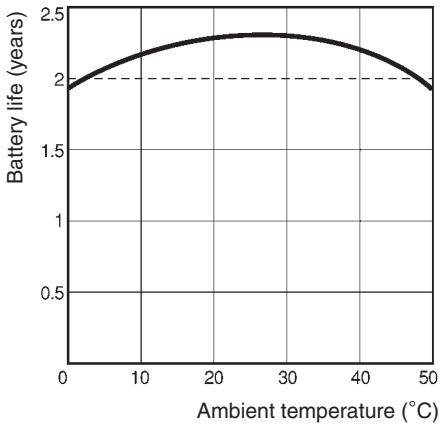


The above graph shows the relationship between the service life of a built-in battery and ambient temperature (after the insulation sheet is removed).

The table below shows the life expectancy of a battery that is stored separately (without being installed in the Data Carrier).

| Temperature (°C) | Battery consumption rate (%) per year |
|---|---|
| 20 | 1 |
| 30 | 2 |
| 40 | 4 |
| 50 | 8 |
| 60 | 16 |
| 70 | 32 |

If the Data Carrier is kept at a temperature of 70°C without removing the insulation sheet, the battery will last for 1.36 years (2 years x (1 – 0.32)).

If the Data Carrier is kept for one year at a temperature of 70°C without removing the insulation sheet, the battery will last for an additional period of approximately one year and four months if used at an ambient temperature of 25°C. The life of the battery will be shortened if used at an ambient temperature of 0° or 50°C.

**Note**

1. The data in SRAM-type Data Carriers will be lost at the time of battery replacement. Be sure to make a backup of the data before replacing the battery.
2. After replacing the battery, be sure to affix the battery cover seal. IP50 is not guaranteed if the battery cover seal is not affixed. Refer to page 60.

# SECTION 3
# Transmission Specifications

This section provides transmission specifications, including distances, ranges, and times.


3-1 Transmission Distance . . . . . 34
3-1-1 Transmission Distance Specifications . . . . . 34
3-1-2 Transmission Range Graphs (Reference Values) . . . . . 35
3-2 Transmission Time . . . . . 37
3-2-1 Transmission Time Specifications . . . . . 37
3-2-2 Data Carrier Travel Speed (Conveyor Speed) . . . . . 37

# 3-1 Transmission Distance

The transmission distance between the Sensor and the Data Carrier will vary depending on combinations and installation conditions. The transmission distance specifications provided here apply to the recommended combinations and transmission distance. Since the transmission distance depends on the installation conditions, be sure to carefully check the installations provided in this section.

## 3-1-1 Transmission Distance Specifications

| Data Carrier | | V600-HAM42-DRT | | | |
|---|---|---|---|---|---|
| | Sensors | V600-HS51 | V600-HS61 | V600-HS63 | V600-HS67 |
| EEPROM memory | V600-D23P53 | 0.5 to 3.0 mm | 0.5 to 3.0 mm | --- | --- |
| | V600-D23P54 | 0.5 to 5.0 mm | 0.5 to 5.5 mm | --- | --- |
| | V600-D23P61 | 0.5 to 8.0 mm | 0.5 to 9.0 mm | 2 to 16 mm | --- |
| | V600-D23P66 | --- | --- | 5 to 30 mm | 5 to 35 mm |
| | V600-D23P66SP | --- | --- | 5 to 25 mm | 5 to 30 mm |
| | V600-D23P71 | --- | --- | 5 to 35 mm | 10 to 70 mm |
| | V600-D23P72 | --- | 0.5 to 18 mm | 5 to 35 mm | 10 to 50 mm |
| SRAM memory | V600-D8KR12D | 5 to 15 mm | 5 to 18 mm | 5 to 45 mm | 10 to 60 mm |
| | V600-D8KR13 | --- | --- | 10 to 30 mm | 10 to 40 mm |
| | V600-D8KR16 | --- | --- | 2 to 15 mm | --- |
| | V600-D8KR04 | --- | --- | 10 to 65 mm | 10 to 100 mm |

**Note**

1. These specifications take into account variations in ambient temperatures and products.
2. The read distance and write distance are the same.
3. Sensor Installation Conditions
   V600-HS51: When flush-mounted in iron
   Axial offset from the Data Carrier: ±2.0 mm
   V600-HS61: When surface-mounted on metal (ferrous)
   Axial offset from the Data Carrier: ±2.0 mm
   V600-HS63: When surface-mounted on metal (ferrous)
   Axial offset from the Data Carrier: ±10.0 mm
   V600-HS67: When surface-mounted on metal (ferrous)
   Axial offset from the Data Carrier: ±10.0 mm
4. Data Carrier Installation Conditions
   V600-D23P53/-P54: When flush-mounted in ferrous
   V600-D23P66/-P71/-P72: When surface-mounted on resin (No metal on the backside)
   V600-D23P61: When surface-mounted on metal (ferrous)
   V600-D8KR12D/-13/-04: When surface-mounted on metal (ferrous)
   V600-D2KR16: When the Data Carrier attached to the holder is mounted on the metal (ferrous) surface
5. The transmission distance indicated in the specifications is also applicable when the Data Carrier is mounted on non-metallic surfaces.
6. The Data Carrier is stationary.

## 3-1-2 Transmission Range Graphs (Reference Values)

The graphs provided here show the transmission ranges from the Data Carrier, with the Sensor taken as the base. The unit of measurement is mm.

### Combinations with the V600-HS51 Sensor

**V600-HS51 + V600-D23P53**

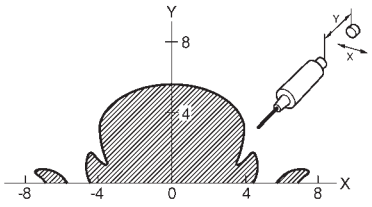


**V600-HS51 + V600-D23P54**

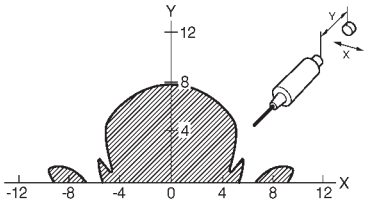


**V600-HS51 + V600-D23P61**

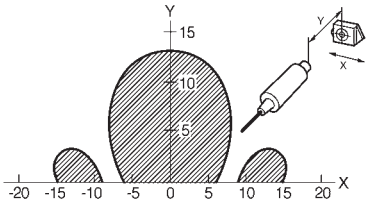


**V600-HS51 + V600-D8KR12D**

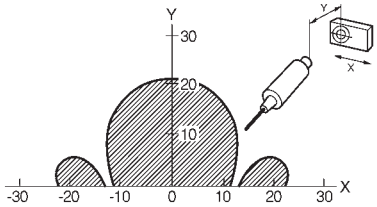


### Combinations with the V600-HS61 Sensor

**V600-HS61 + V600-D23P53**

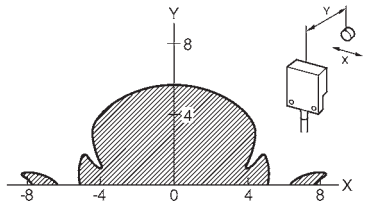


**V600-HS61 + V600-D23P54**

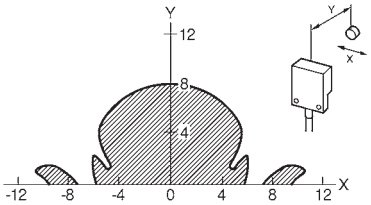


**V600-HS61 + V600-D23P61**

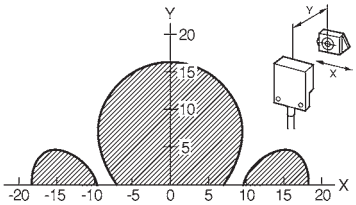


**V600-HS61 + V600-D23P72**

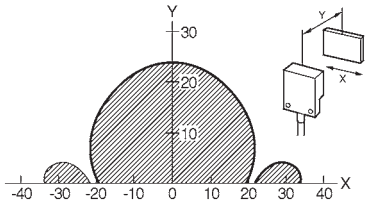


**V600-HS61 + V600-D8KR12D**

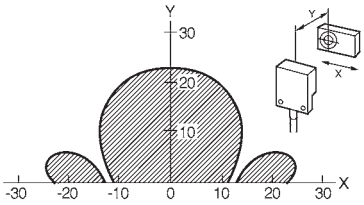

## Combinations with the V600-HS63 Sensor

**V600-HS63 + V600-D23P61**

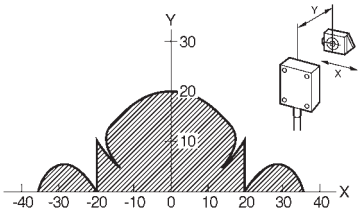


**V600-HS63 + V600-D23P66**

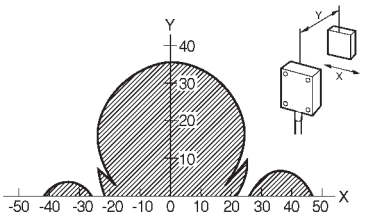


**V600-HS63 + V600-D23P66SP**

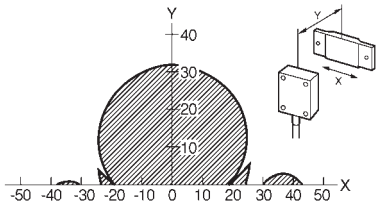


**V600-HS63 + V600-D23P71**

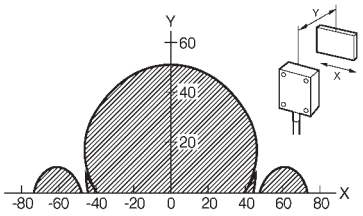


**V600-HS63 + V600-D23P72**

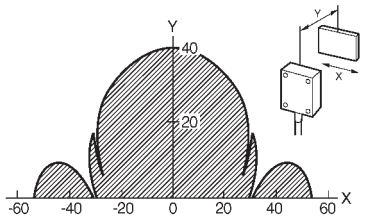


**V600-HS63 + V600-D8KR12D**

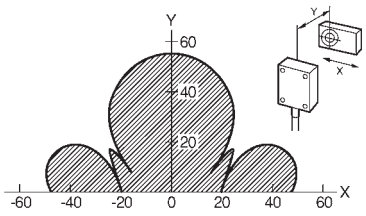


**V600-HS63 + V600-D8KR13**

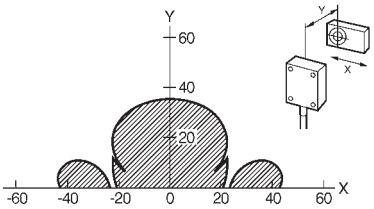


**V600-HS63 + V600-D28R16**

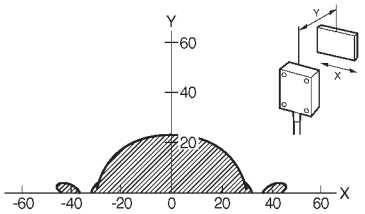


**V600-HS63 + V600-D8KR04**

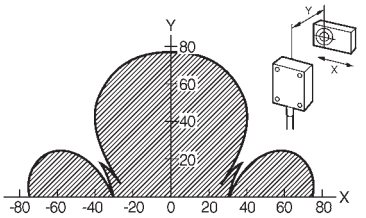

## Combinations with the V600-HS67 Sensor

**V600-HS67 + V600-D23P66**

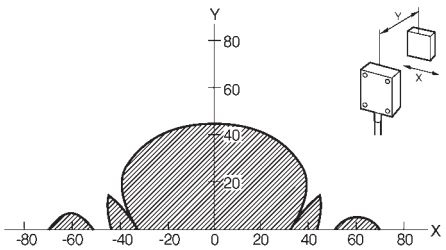


**V600-HS67 + V600-D23P66SP**

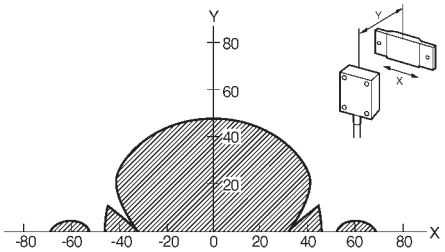


**V600-HS67 + V600-D23P71**

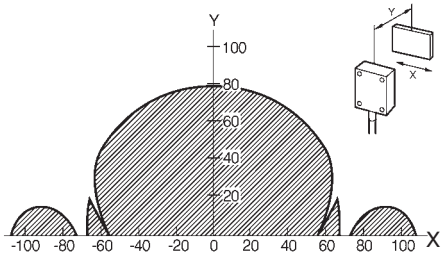


**V600-HS67 + V600-D23P72**

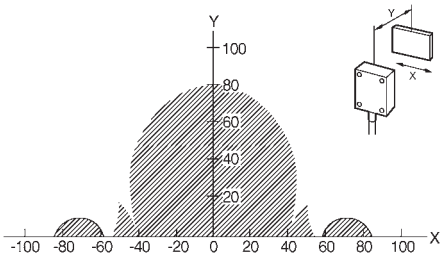


**V600-HS67 + V600-D8KR12D**

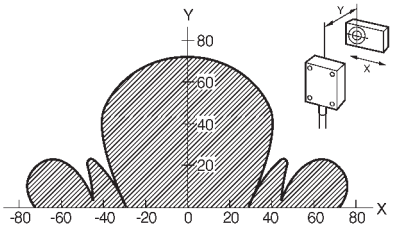


**V600-HS67 + V600-D8KR13**

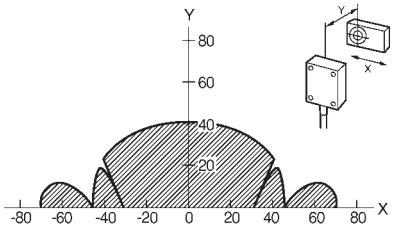


**V600-HS67 + V600-D8KR04**

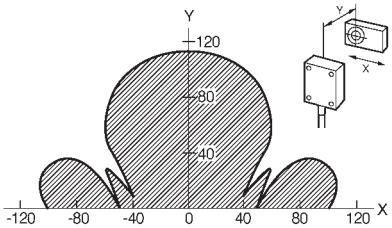


# 3-2 Transmission Time

## 3-2-1 Transmission Time Specifications

The transmission time is time required for transmission between the Sensor and the Data Carrier. With the Intelligent Flag III, this time is longer for writing than for reading.

| | V600-HAM42-DRT | | |
|---|---|---|---|
| **R/W** | **Read** | **Write** | |
| **Mode type** | **DATA READ mode** | **BYTE mode** | **BIT SET mode, BIT CLEAR mode** |
| EEPROM | 79 ms | 140 ms | 152 ms |
| SRAM | 64 ms | 97 ms | 109 ms |

## 3-2-2 Data Carrier Travel Speed (Conveyor Speed)

The Data Carrier (DC) travel speed (i.e., the conveyor speed) can be calculated when the Intelligent Flag III transmission range and the transmission time are known.

$$\text{DC speed (conveyor speed)} = \frac{\text{Distance travelled in the transmission range (x)}}{\text{Transmission time}}$$

In this example, the Data Carrier travel speed is calculated when data is read using a V600-HAM42-DRT Amplifier with a V600-HS63 Sensor and a V600-D8KR04 Data Carrier.

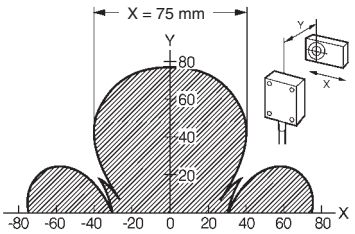


$$\text{DC speed (conveyor speed)} = \frac{75\ (\text{mm})}{64\ (\text{ms})} = \frac{75 \times 10^{-3}\ (\text{m})}{64 \times 10^{-3} \times 1/60\ (\text{min})} = 70.3\ (\text{m/min})$$

**Note**

1. The travel speed will vary depending on transmission distance Y, axis deviation, and so on, so it is recommended that the transmission range graph be taken as a reference and that the widest portion of the range be used for the calculation.
2. The values shown here are standards. When using them, be sure to test them on the actual equipment.
3. This equation does not include transmission error processing.

# SECTION 4
# Installation

This section explains how to install Intelligent Flag III Amplifiers, Sensors, and Data Carriers.


4-1 Installing Amplifiers . . . . . 40
4-1-1 Installation Environment . . . . . 40
4-1-2 Installation Methods . . . . . 40
4-1-3 Connecting Interface Cables . . . . . 43
4-1-4 Connecting Sensors . . . . . 44
4-2 Installing Sensors . . . . . 44
4-2-1 Installation Method . . . . . 44
4-2-2 Effects of Metal On Transmission Distance . . . . . 47
4-2-3 Mutual Interference Between Sensors . . . . . 48
4-2-4 Interference with Proximity Sensors . . . . . 50
4-3 Installing Data Carriers . . . . . 52
4-3-1 Data Carriers With EEPROM and No Battery . . . . . 52
4-3-2 Data Carriers With SRAM and Built-in Battery . . . . . 58

# 4-1 Installing Amplifiers

## 4-1-1 Installation Environment

**Installation Site**

Avoid installing the V600-HAM42-DRT Amplifier in the following locations:

- Locations where the ambient temperature drops below 0°C or exceeds 55°C or where sudden temperature changes cause condensation.
- Locations where the relative humidity drops below 35% or exceeds 85%.
- Locations exposed to corrosive gases, inflammable gases, dust, salinity, or iron dust.
- Locations where vibration or shock is directly transmitted to the Amplifier.
- Locations exposed to direct sunlight.
- Locations exposed to spattering water, oil, chemicals, and other liquids.

**Installation Position Inside Control Panels**

The ambient temperature for the Amplifier must be between 0°C and 55°C. Note the following items:

- Provide enough space for ventilation. In particular, when multiple Amplifiers are to be installed side by side, install a fan to allow each Amplifier to dissipate heat properly.
- Avoid installing the Amplifier near heat-generating devices, such as heaters, transformers, or high-capacity resistors.
- If power cables such as motor power cables (through which high current flows) are to be routed near the Amplifier, conduct enough tests and carefully route these cables taking the wiring conditions into account.

## 4-1-2 Installation Methods

The Amplifier can be either mounted directly with screws or mounted onto a DIN Track.

**Installing Amplifiers Directly**

To install the Amplifier directly, always use plain washers and two M4 screws to secure it.

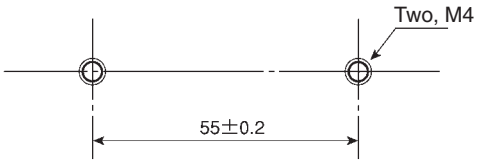

### Installing Amplifiers onto a DIN Track

***1, 2, 3...***

1. To install the Amplifier onto a DIN Track, hitch the Amplifier at portion A and press it in the direction indicated by arrow B.
2. To remove the Amplifier from the DIN Track, pull the mounting hook towards you.

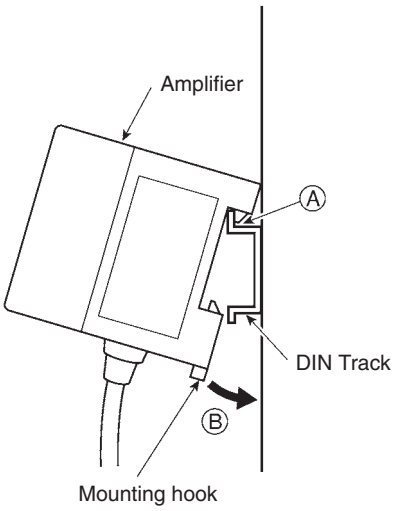


**DIN Track**
**PFP-100N2 (Supplied by OMRON)**

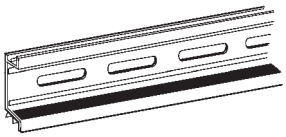

**End Plate**
**PFP-M (Supplied by OMRON)**

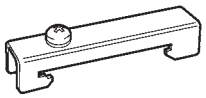

### Clearance Between Amplifiers

When installing multiple V600-HAM42-DRT Amplifiers side by side, provide at least 10 mm clearance between Amplifiers to allow them to dissipate heat properly.

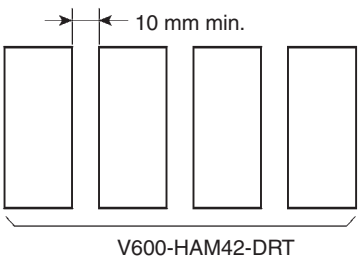

Use at least two spacers (supplied by OMRON) on a DIN Track. The width of each spacer is 5 mm.

**Spacer**
**PFP-S**

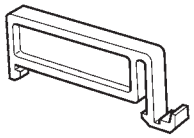

**Grounding**

The FG line is provided for grounding to the earth. When using the Amplifier in an environment where it is exposed to large amounts of noise or if the Amplifier malfunctions, provide a ground with a resistance of 100 Ω or less. Note that sharing the grounding wire with other equipment or grounding to the beam of a building will adversely affect the grounding effect.

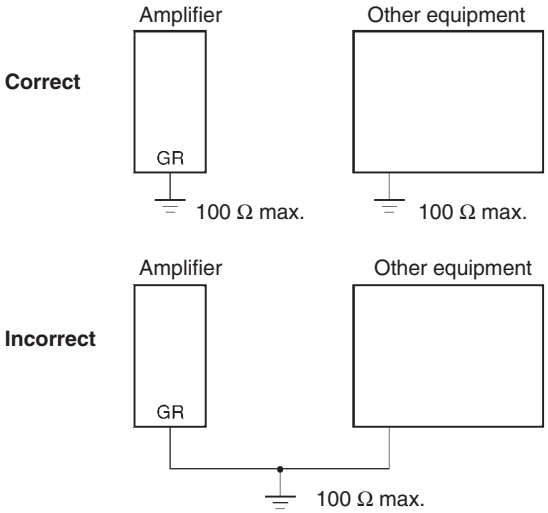


**Grounding the Network**

The CompoBus/D Network must be grounded at one location and one location only so that a ground loop is not created. The ground should also be connected as close as possible to the center of the Network. Connect the cable shield to the ground (GR) terminal on the communications power supply and then connect to a ground of 100 Ω max., as shown in the following diagrams.

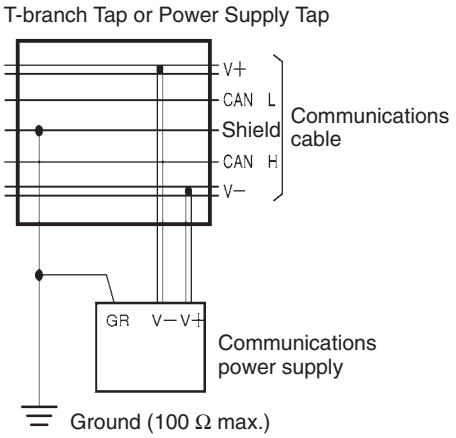


**Power supply with cable grounded (one location only)**

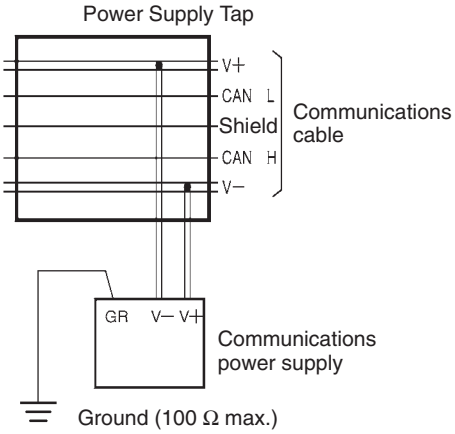


**Power supply without cable grounded**

If more than one communications power supply is connected to the same network, ground only the one nearest the center of the network. Do not connect the shield wire at the other power supplies. Always use Power Supply Taps when connecting more than one communications power supply to the same network. (The power supplies are not counted as network nodes.)

**Note**
1. Always ground the communications cable shield at one and only one location in the network.
2. Always ground to 100 Ω or less.
3. Always use a separate ground. Never use the a common ground for inverters or other drive system devices.

**Exposure to Spattering Water or Oil**

The Amplifier and its connector to the Interface Cable are not waterproof. Be sure to house them in a control box.

## 4-1-3 Connecting Interface Cables

**Connection Method**

The Amplifier and Interface Cable are connected with connectors. Inserting the connector of the Interface Cable into the connector of the Amplifier locks them with the right and left locks.

**Note** For details regarding the Interface Plug and Interface Cable, refer to the *CompoBus/D (DeviceNet) Operation Manual (W267)*.

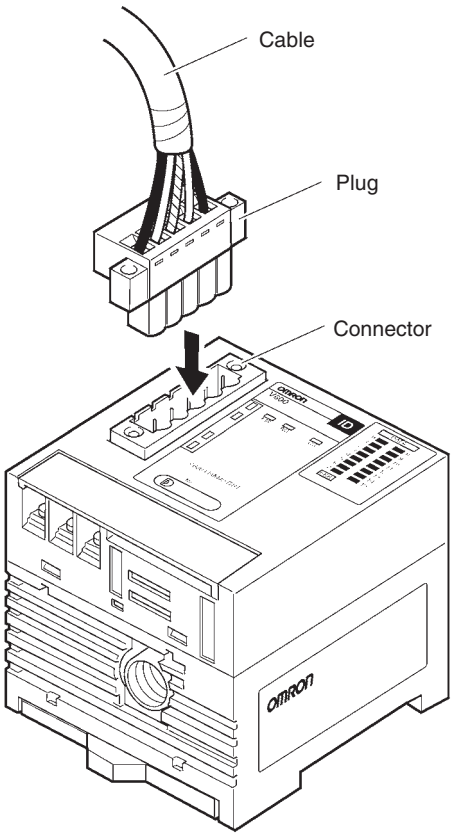


**⚠ WARNING**

Always be sure to house the V600-HAM42-DRT Amplifier (including the cable and connector) in a control box. Exposure to water, oil, dust, metal powder, corrosive gases, or machine solvents may result in faulty operation, damage to the product or fire.

### 4-1-4 Connecting Sensors

Hold the black part A of the connector, align the notch on the connector with the notch in the jack, and insert the connector until it snaps in.

To disconnect the Sensor, pull portion B of the connector.

**Note** 1. When inserting the connector, always hold the molded section A. Pressing part B will not lock the connector.
2. When disconnecting the connector, always hold part B and then pull it out.

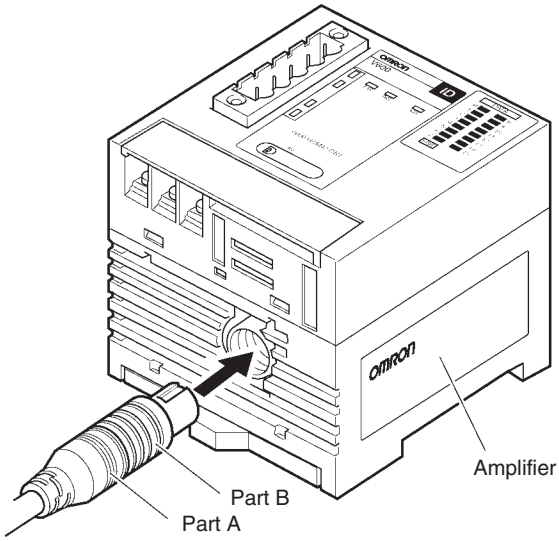


## 4-2 Installing Sensors

### 4-2-1 Installation Method

**V600-HS51**

The V600-HS51 Sensor is M12 in size. When embedding or attaching to metal, separate the communications section (coil tip) from the metal by at least 15 mm in all directions.

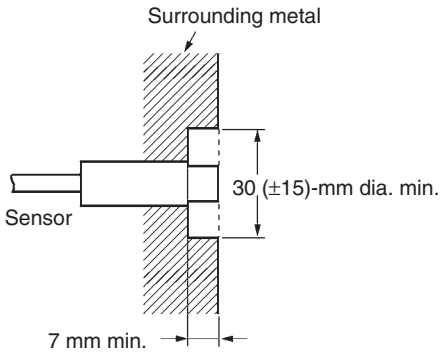


**Note** Do not let the surrounding metal extend beyond the end of the Sensor.

**Mounting to Brackets: Mounting Hole Dimensions**

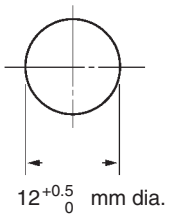

**Note** Mount the Sensor to the bracket so that the lock washers and nuts clamp onto the bracket. The maximum tightening torque is 6 N · m.

## V600-HS61

Mount the Sensor with two M3 screws.

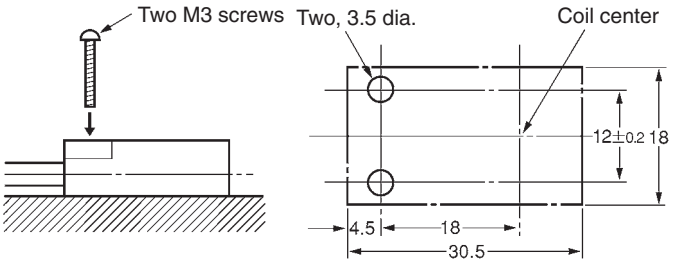


## V600-HS63

The V600-HS63 Sensor has special nuts that allow it to be mounted to either the front or rear panel.

### (1) Front Panel Mounting

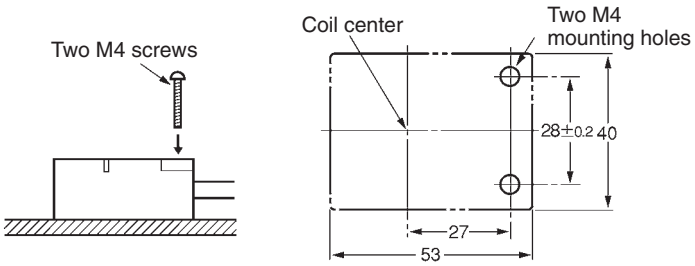


**Note** Remove the nut for front panel mounting.

### (2) Rear Panel Mounting

Insert the nuts that are included with the Sensor into the locations marked “A.”

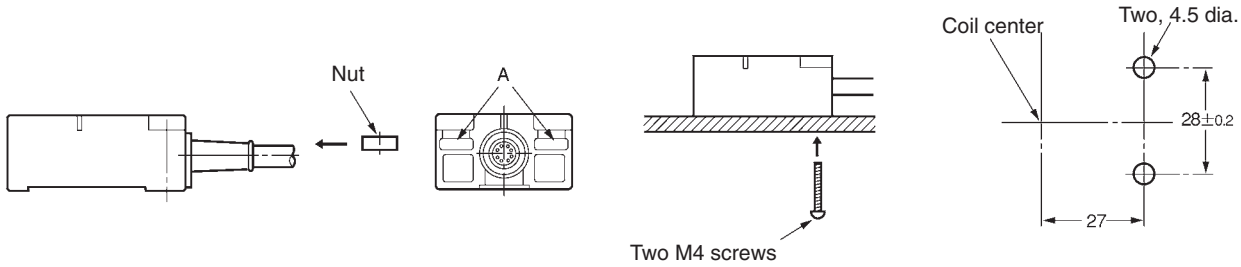

## V600-HS67

Use M4 screws and spring washers (in four places) for Sensor installation. Tighten the screws to a torque of 0.7 to 1.2 N • m.

There are no restrictions on the mounting direction or the direction of access to the Data Carrier, but if the Sensor is to be installed near a device such as a conveyance belt, make sure there is no danger of the Sensor being accidentally struck.

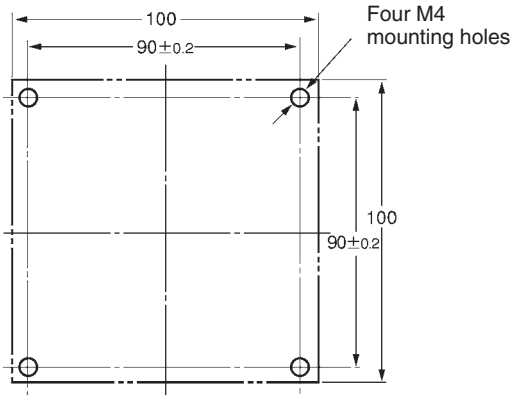


**Mounting Bracket Dimensions (V600-HS67 Only)**

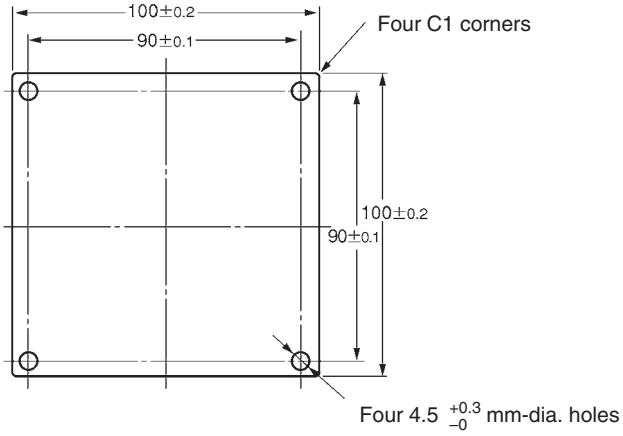


**Note** A mounting bracket is provided with the V600-HS67. It is not necessary to use this bracket if a metal mounting plate larger than the 100×100 mm "footprint" of the Sensor is used for installation.

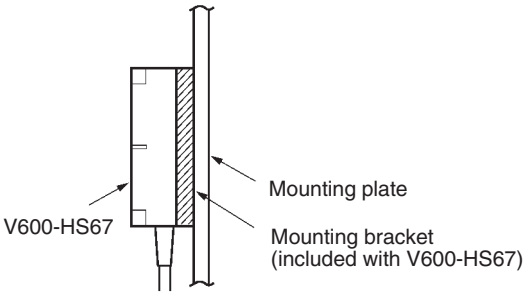


**⚠ CAUTION**

Be sure to ground the mounting surface if it is metal.

## 4-2-2 Effects of Metal On Transmission Distance

**V600-HS51**

If there is metal extending to the coil surface near the Sensor, the transmission distances will be reduced by approximately 30% from the transmission distances shown in *3-1-1 Transmission Distance Specifications*.

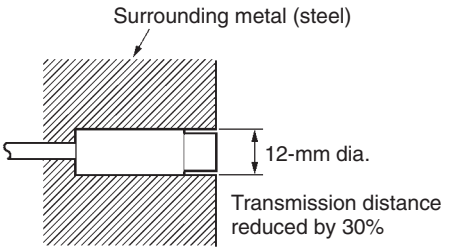


**V600-HS61**

The V600-HS61 Sensor can be surface-mounted, or it can be embedded in metal to protect it from colliding with other objects. When embedding the Sensor, separate it from the metal surfaces on all sides by at least 15 mm to prevent operating errors. The height of the metal surfaces must not exceed beyond the height of the Sensor.

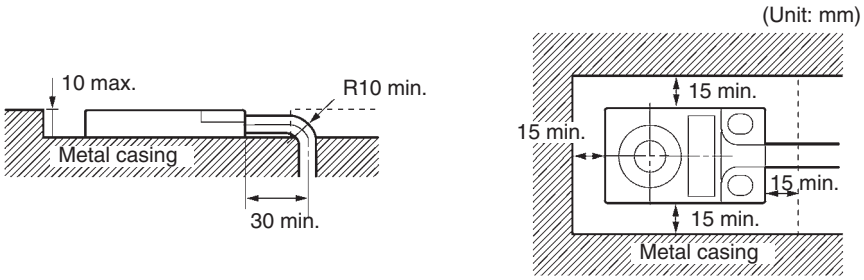


**Note**
1. The bending radius of the cord must be at least 10 mm.
2. The transmission distance will be greatly reduced if the Sensor is not separated from surrounding metal surfaces by at least 15 mm.

**V600-HS63**

The V600-HS63 Sensor can be surface-mounted, or it can be embedded in metal to protect it from colliding with other objects. When embedding the Sensor, separate it from the metal surfaces on all sides by at least 30 mm to prevent operating errors. If it is less than 30 mm, the transmission distance will be greatly reduced. Moreover, the height of the metal surfaces must not exceed beyond the height of the Sensor.

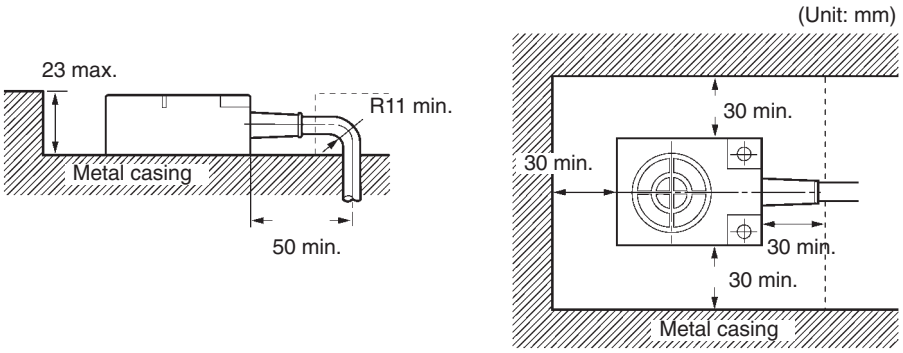


**Note**
1. The bending radius of the cord must be at least 11 mm.
2. The transmission distance will be greatly reduced if the Sensor is not separated from surrounding metal surfaces by at least 30 mm.

**V600-HS67**

In addition to surface mounting, it is also possible to flush-mount the V600-H67 Sensor within a metal casing to protect it from being struck by other objects. To prevent malfunctioning, allow at least 50 mm between the sides of the Sensor and the metal casing, and do not mount the Sensor below the metal surface. If it is less than 50 mm, the transmission distance will be greatly reduced.

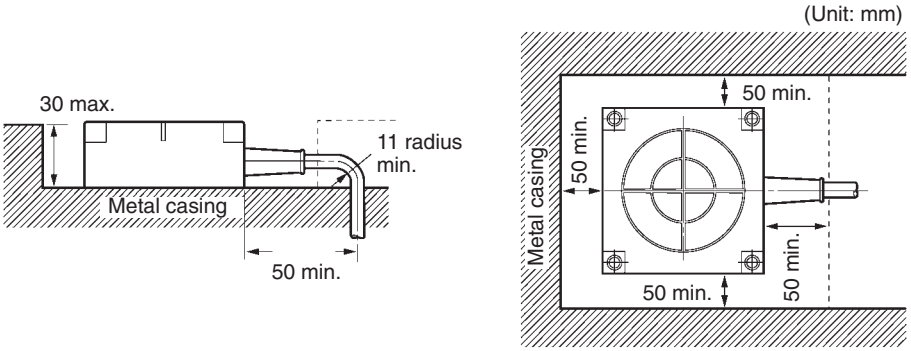


**Note** 1. Do not bend the Sensor's cable into a curve tighter than 11 mm in radius.
2. The read/write transmission range will be reduced significantly if the Sensor is installed closer than 50 mm to metal surfaces.

## 4-2-3 Mutual Interference Between Sensors

When using multiple Sensors, be sure to install them at the distances shown below in order to prevent malfunctions due to mutual interference.

**V600-HS51**

When facing each other or facing the same direction, V600-HS51 Sensors should be installed at least 80 mm apart.

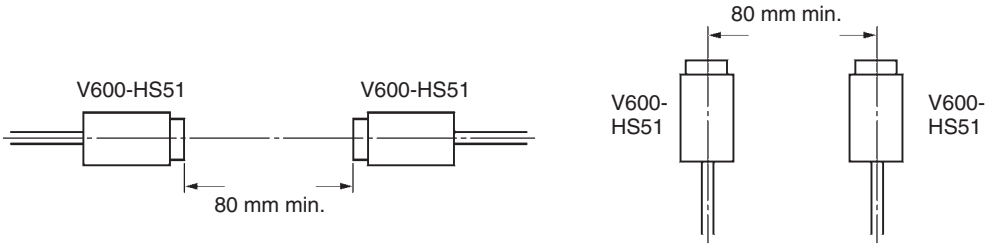


**V600-HS61**

When facing each other or facing the same direction, V600-HS61 Sensors should be installed at least 80 mm apart.

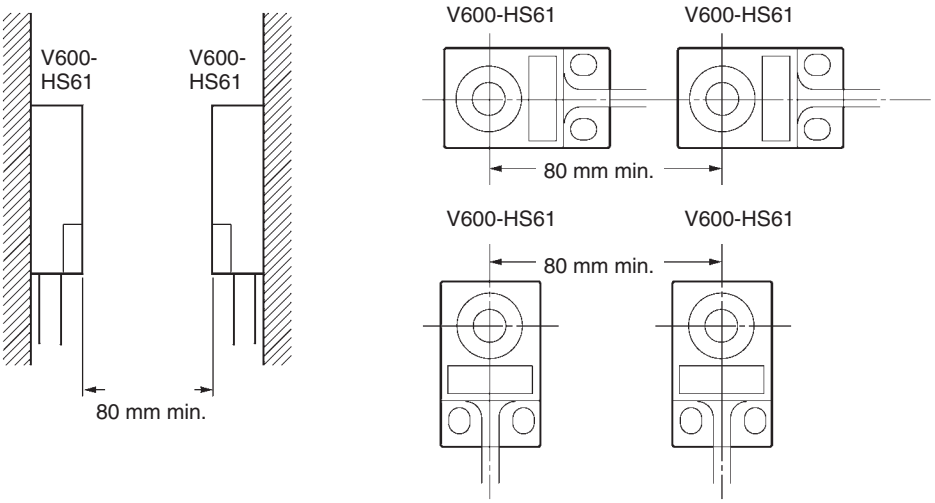

**V600-HS63**

When facing each other or facing the same direction, V600-HS63 Sensors should be installed at least 200 mm apart.

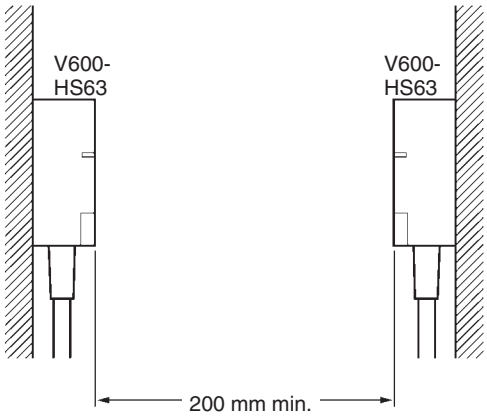


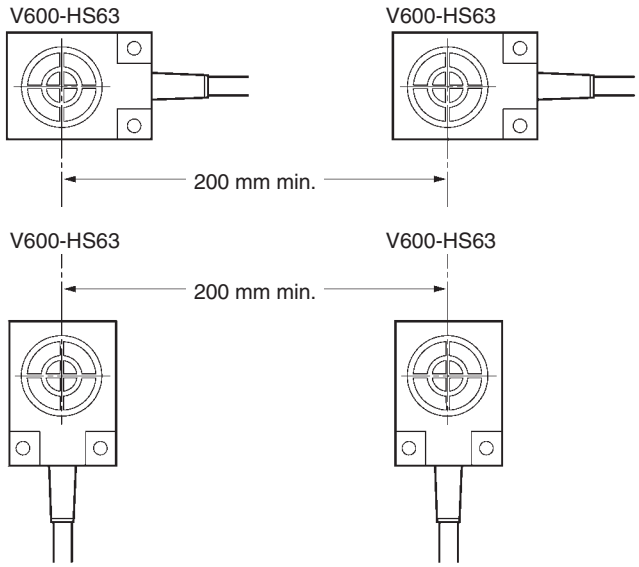


**V600-HS67**

When facing each other, V600-HS67 Sensors should be installed at least 650 mm apart when used in SYNC mode, or 900 mm apart when used in AUTO mode. When facing the same direction, they should be installed at least 550 mm apart when used in SYNC mode, or 1,200 mm apart when used in AUTO mode.

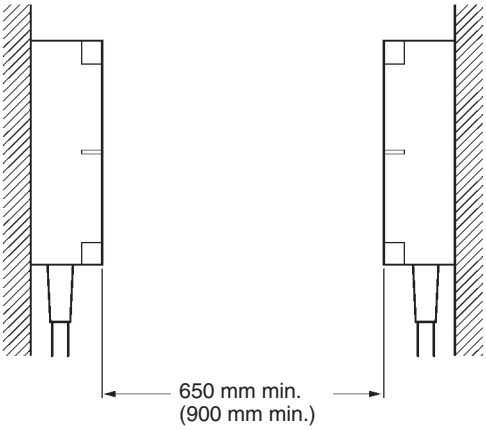


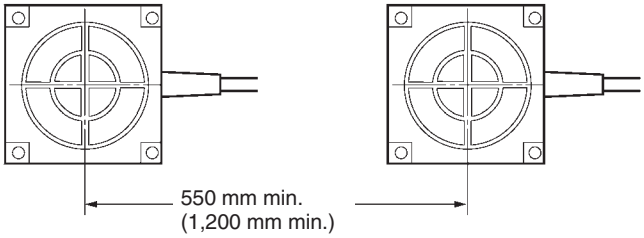

## 4-2-4 Interference with Proximity Sensors

V600 Sensors use electromagnetic coupling method (frequency: 530 kHz), so, if they are installed near sensors (such as proximity sensors) with an oscillation frequency of 400 to 600 kHz, it may cause the sensors to malfunction. Before installing Sensors, and when selecting sensors, be sure to conduct tests to make sure that there will be no interference.

**V600-HS51**

The interference range will vary depending on the relative positions of the proximity sensor and the Sensor. Be sure to install them at least as far apart as shown in the following diagram.

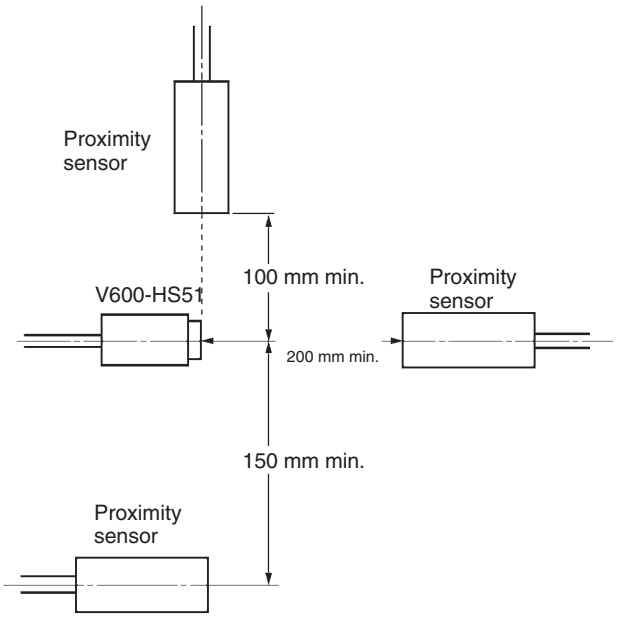


**V600-HS61**

Be sure to install the Sensor and proximity sensor at least as far apart as shown in the following diagram.

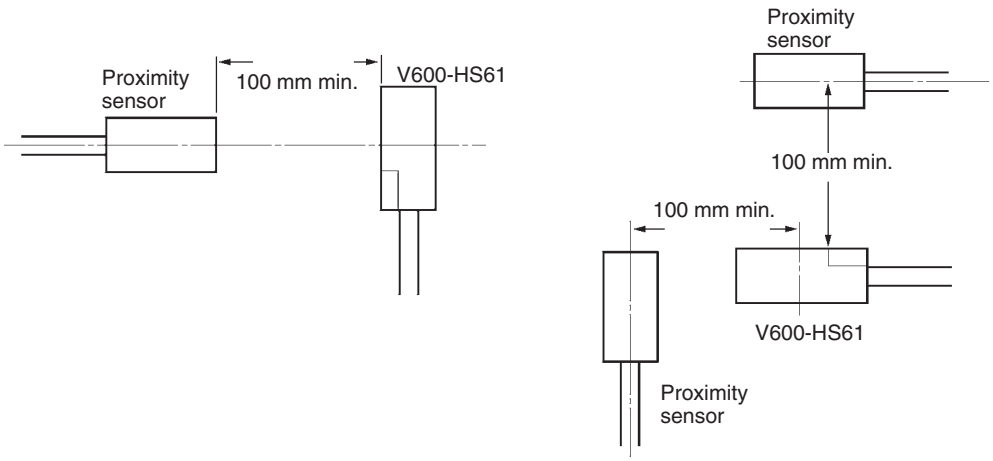

**V600-HS63**

Be sure to install the Sensor and proximity sensor at least as far apart as shown in the following diagram.

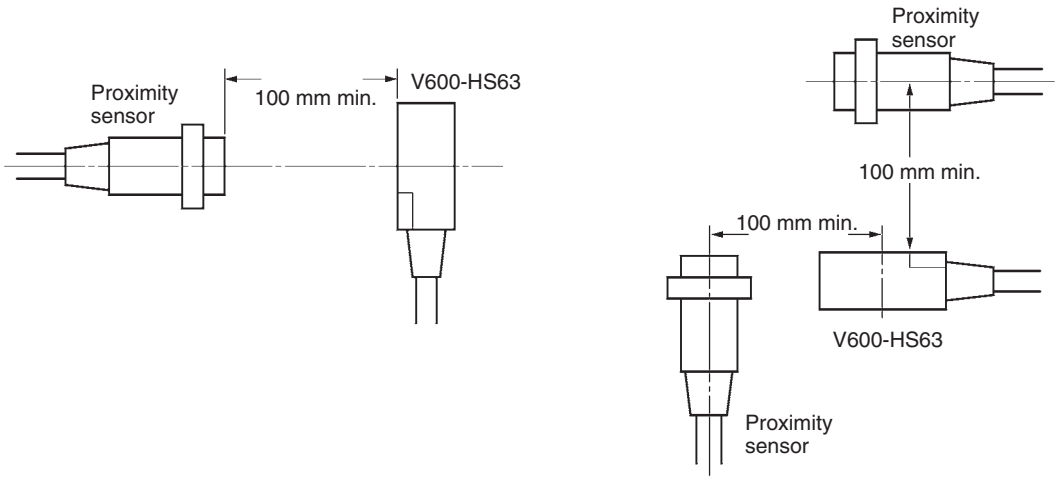


**V600-HS67**

Be sure to install the Sensor and proximity sensor at least as far apart as shown in the following diagram.

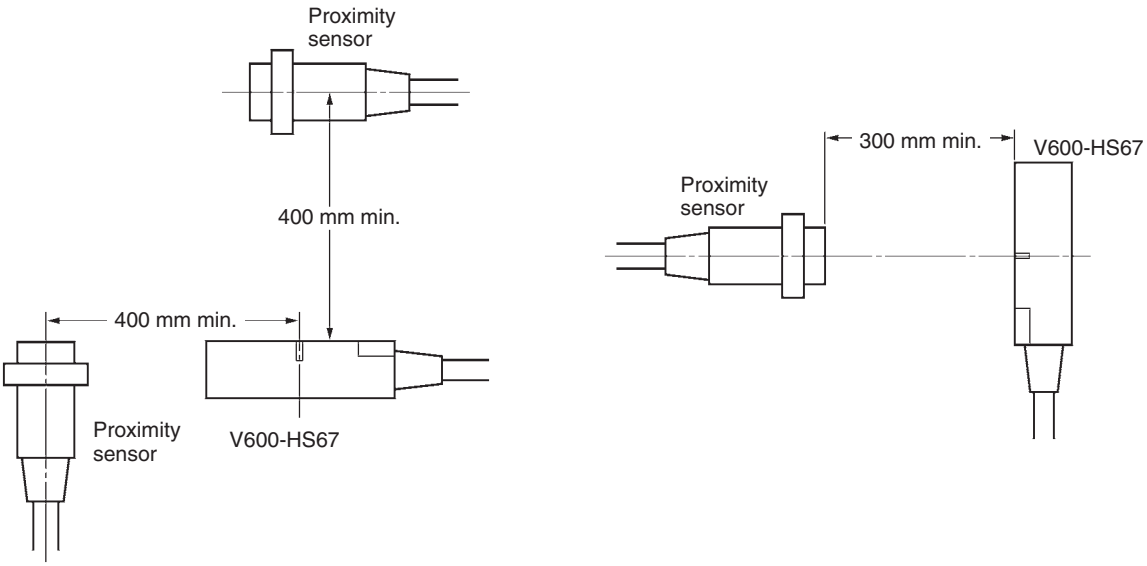

# 4-3 Installing Data Carriers

## 4-3-1 Data Carriers With EEPROM and No Battery

### V600-D23P71/P72 Data Carriers

We recommend that the Data Carriers be installed using holders. You can either fabricate your own holders, or use the V600-A84 Holder (sold separately).

**Installation in V600-A84 Holders**

Attach the Holder using M3 plain-head screws. The tightening torque is 0.3 to 0.5 N · m. Insert the Data Carriers after attaching the Holders. Insert a Data Carrier into the grooves on the Holder and slide it completely into place, as shown in the following diagram.

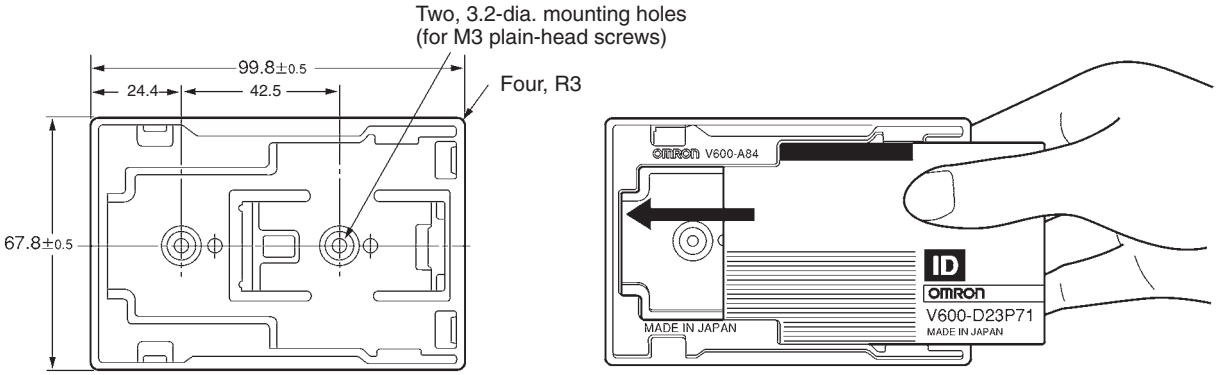


**Ultrasonic Mounting**

Ultrasonic welding can be used for mounting the V600-A84 Holder to a plastic packet or container. Each spot can be welded for a couple of seconds.

**Effects of Metal**

The transmission distance will be reduced if there is metal in back of a Data Carrier. When mounting on a metal surface, insert a non-metallic spacer (e.g., plastic, wood, etc.). The following diagrams show the relationship between the distance between a Data Carrier and a metal surface and the transmission distance.

**(1) V600-D23P71**

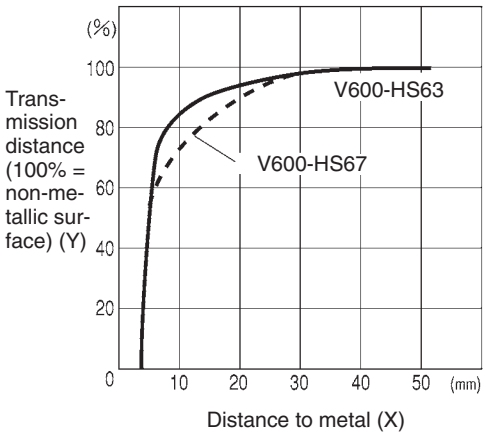


**(2) V600-D23P72**

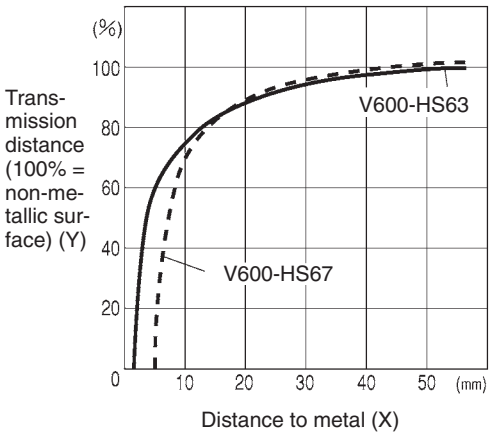


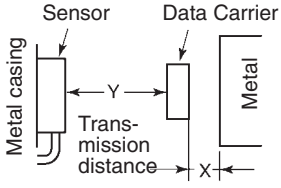

V600-A84 Holders can be used to adjust the distance between a Data Carrier and a metal surface by piling up more than one Holder. The Holders will lock in place if they are piled in alternating directions. Each Holder is 5 mm thick.

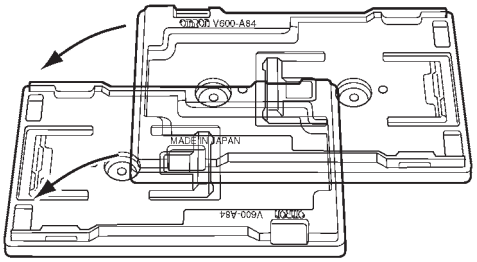


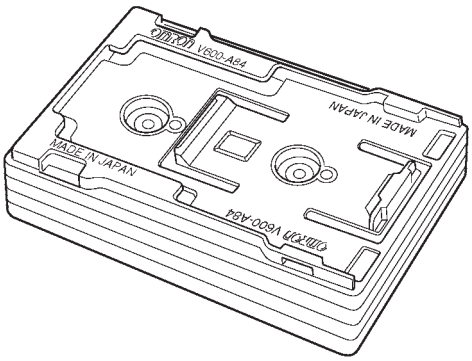


**Effect of Misalignment**

Install the Sensors and Data Carriers so that they are as parallel as possible to each other. Communications will be possible even if they are not perfectly parallel, but the transmission distance will be affected, as listed in the following tables.

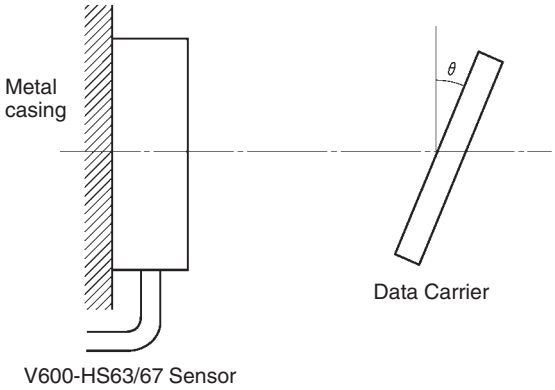


**(1) Reduction in Transmission Distance for Misalignment in V600-D23P71**

| Sensor | Data Carrier misalignment (θ°) | | | | |
|---|---|---|---|---|---|
| | 0 | 10 | 20 | 30 | 40 |
| V600-HS63 | 0% | 1% | 3% | 6% | 10% |
| V600-HS67 | 0% | 0% | 2% | 4% | 6% |

**(2) Reduction in Transmission Distance for Misalignment in V600-D23P72**

| Sensor | Data Carrier misalignment (θ°) | | | | |
|---|---|---|---|---|---|
| | 0 | 10 | 20 | 30 | 40 |
| V600-HS63 | 0% | 3% | 4% | 5% | 7% |
| V600-HS67 | 0% | 0% | 4% | 6% | 12% |

Mounting Conditions: Sensor surface-mounted to a metal surface, Data Carrier mounted to non-metallic surface.

## V600-D23P66 Data Carriers

**Installation Method**

Attach the Holder using M3 plain-head screws and washers. The tightening torque is 0.3 to 0.5 N · m.

The Data Carriers can be installed in any direction with respect to movement relative to the Sensor.

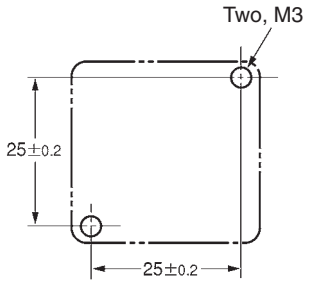


**Effects of Metal**

The transmission distance will be reduced if there is metal in back of a Data Carrier. When mounting on a metal surface, use the special Attachment (sold separately) or insert a non-metallic spacer (e.g., plastic, wood, etc.). The following diagrams show the relationship between the distance between a Data Carrier and a metal surface and the transmission distance. The Attachment is 10 mm thick.

**Installation on an Attachment**

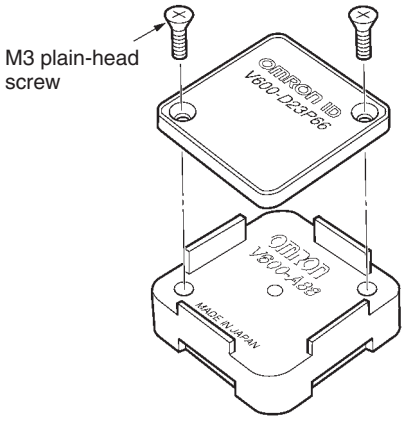


**V600-D23P66**

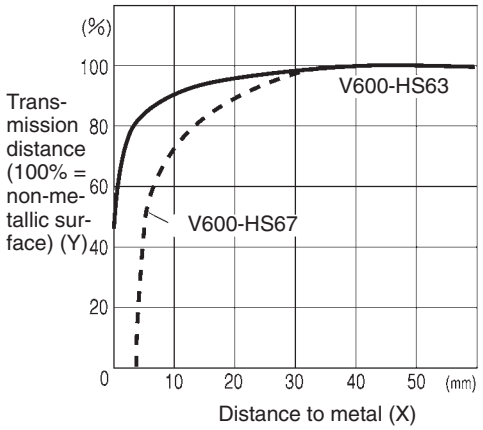


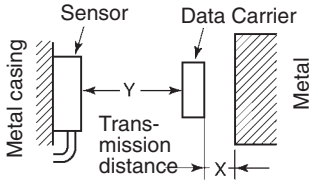


Align the Attachment and Data Carrier so that the mounting holes align.

**Effect of Misalignment**

Install the Sensors and Data Carriers so that they are as parallel as possible to each other. Communications will be possible even if they are not perfectly parallel, but he transmission distance will be affected, as listed in the following tables.

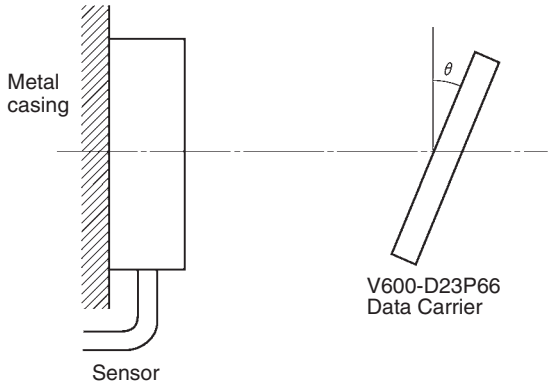

**(1) Reduction in Transmission Distance for Misalignment in V600-D23P66**

| Sensor | Data Carrier misalignment (θ°) | | | | |
|---|---|---|---|---|---|
| | 0 | 10 | 20 | 30 | 40 |
| V600-HS63 | 0% | 2% | 2% | 3% | 5% |
| V600-HS67 | 0% | 1% | 3% | 8% | 17% |

Mounting Conditions: Sensor surface-mounted to a metal surface, Data Carrier mounted to non-metallic surface.

## V600-D23P66SP Data Carriers

**Installation Method**

Attach the Holder using M5 plain-head screws and washers. The tightening torque is 1.2 N · m.

The Data Carriers can be installed in any direction with respect to movement relative to the Sensor.

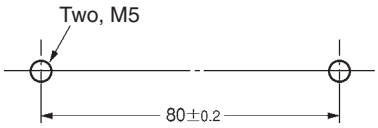


**Effects of Metal**

The transmission distance will be reduced if there is metal in back of a Data Carrier. When mounting on a metal surface, insert a non-metallic spacer (e.g., plastic, wood, etc.). The following diagrams show the relationship between the distance between a Data Carrier and a metal surface and the transmission distance.

**V600-D23P66SP**

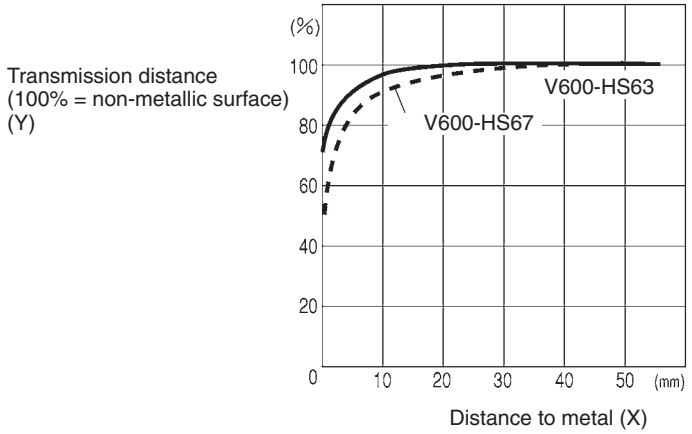


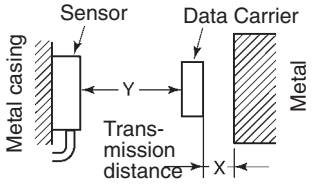


**Effect of Misalignment**

Install the Sensors and Data Carriers so that they are as parallel as possible to each other. Communications will be possible even if they are not perfectly parallel, but the transmission distance will be affected, as listed in the following tables.

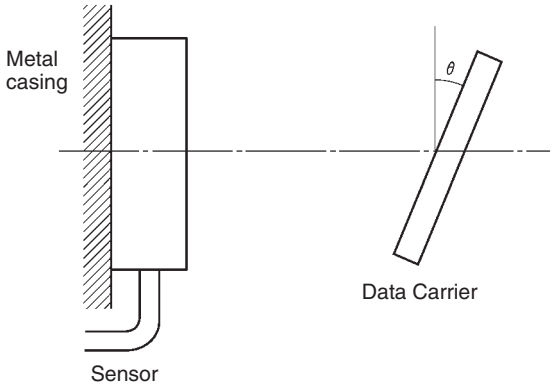

**(1) Reduction in Transmission Distance for Misalignment in V600-D23P66SP**

| Sensor | Data Carrier misalignment (θ°) | | | | |
|---|---|---|---|---|---|
| | 0 | 10 | 20 | 30 | 40 |
| V600-H63 | 0% | 2% | 2% | 3% | 5% |
| V600-H67 | 0% | 1% | 3% | 8% | 17% |

Mounting Conditions: Sensor surface-mounted to a metal surface, Data Carrier mounted to non-metallic surface.

## V600-D23P61 Data Carriers

**Installation Method**

Attach the Holder using M3 plain-head screws and washers. The tightening torque is 0.3 to 0.5 N · m.

The Data Carriers can be installed in any direction in respect to movement relative to the Sensor.

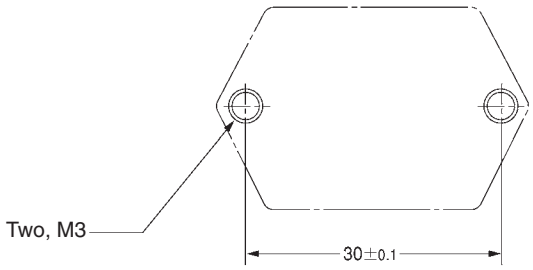


**Effects of Metal**

If there is metal surrounding the Data Carrier (as shown in diagram (b), below), the transmission distances will be reduced by approximately 10% over a Data Carrier mounted to a metal surface (as shown in diagram (a), below).

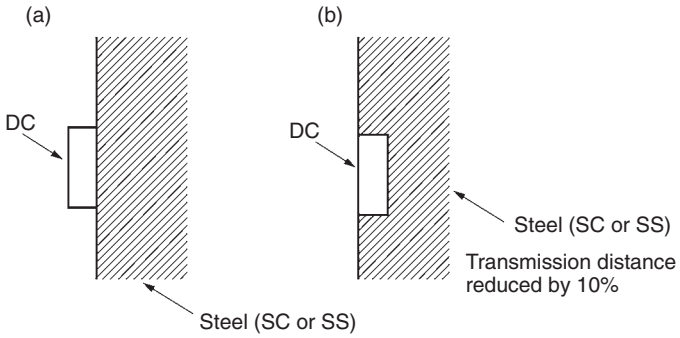


(a) Mounting to Metal Surface (b) Embedding in Metal

**Differences in Surrounding Metals**

Transmission distances are also affected by the type of metal in back of or surrounding the Data Carriers, as shown in the following table.

| Data Carrier | Iron | SUS | Brass | Aluminum |
|---|---|---|---|---|
| V600-D23P61 | 100% | 95% | 95% | 95% |

**Note** The values for iron are set to 100%.

**Effect of Misalignment**

Install the Sensors and Data Carriers so that they are as parallel as possible to each other. Communications will be possible even if they are not perfectly parallel, but the transmission distance will be affected, as listed in the following tables.

**Reduction in Transmission Distance for Misalignment in V600-D23P61**

| Sensor | Data Carrier misalignment (θ°) | | | | |
|---|---|---|---|---|---|
| | 0 | 10 | 20 | 30 | 40 |
| V600-H63 | 0% | 5% | 14% | 23% | 100% |

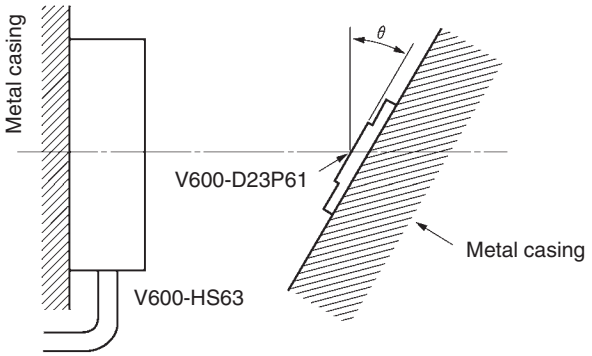


## V600-D23P53/P54 Data Carriers

**Installation Method**

- Refer to the following dimension diagrams when mounting the Data Carriers.
- Use a two-part epoxy adhesive to attach the Data Carriers.

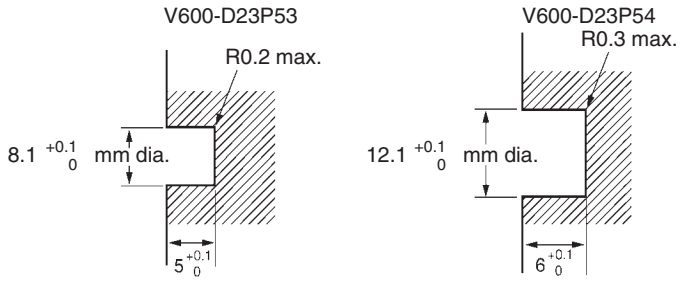


**Differences in Surrounding Metals**

Transmission distances are also affected by the type of metal in back of or surrounding the Data Carriers, as shown in the following table.

| Data Carrier | Iron | SUS | Brass | Aluminum |
|---|---|---|---|---|
| V600-D23P53 (8 dia.) | 100% | 70 to 80 % | 55 to 70% | 55 to 70% |
| V600-D23P54 (12 dia.) | 100% | 85 to 90% | 80 to 85% | 80 to 85% |

**Note** The values for iron are set to 100%.

**Effect of Misalignment**

Install the Sensors and Data Carriers so that they are as parallel as possible to each other. Communications will be possible even if they are not perfectly parallel, but the transmission distance will be affected, as listed in the following tables.

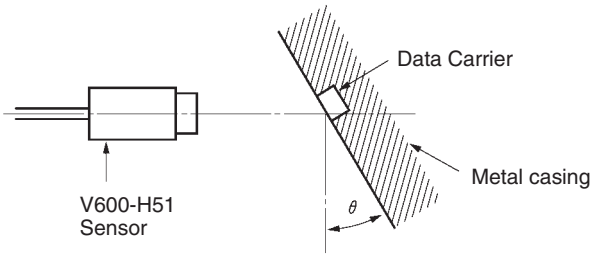


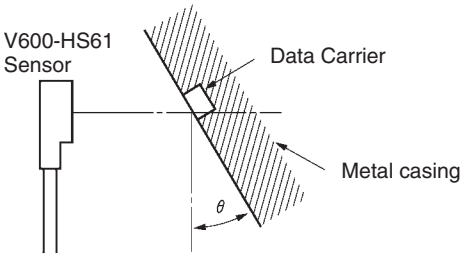

**(1) Reduction in Transmission Distance for Misalignment in V600-D23P53**

| Sensor | Data Carrier misalignment (θ°) | | | | |
|---|---|---|---|---|---|
| | 0 | 10 | 20 | 30 | 40 |
| V600-HS51/HS61 | 0% | 8% | 16% | 30% | 60% |

**(2) Reduction in Transmission Distance for Misalignment in V600-D23P54**

| Sensor | Data Carrier misalignment (θ°) | | | | |
|---|---|---|---|---|---|
| | 0 | 10 | 20 | 30 | 40 |
| V600-HS51/HS61 | 0% | 4% | 8% | 16% | 30% |

## 4-3-2 Data Carriers With SRAM and Built-in Battery

### V600-D8KR12D/KR13/KR04 Data Carriers

**Installation Method**

Use M4 screws and spring washers for Data Carrier installation. Tighten the screws to a torque of 0.7 to 1.2 N • m.

There are no restrictions on the mounting direction or the direction with respect to the Sensors.

**V600-D8KR12D**

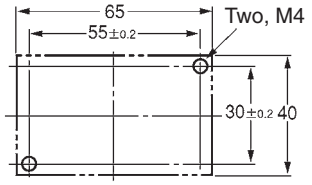


**V600-D8KR13**

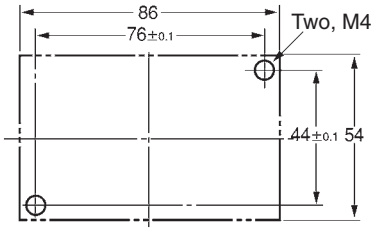


**V600-D8KR04**

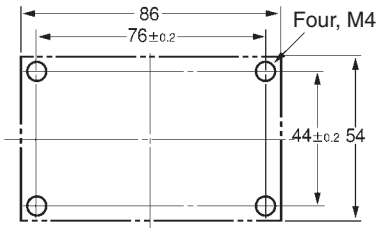


**Mounting in Metal Casing**

The V600-D8KR12D and V600-D8KR13 Data Carriers can be either surface-mounted or flush-mounted. When flush-mounted in metal, the top of the Data Carrier must not be lower than the surface of the metal casing.

**V600-D8KR12D**

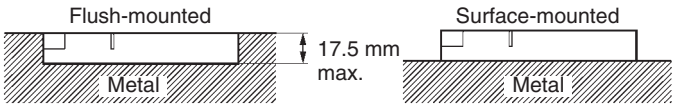


**V600-D8KR13**

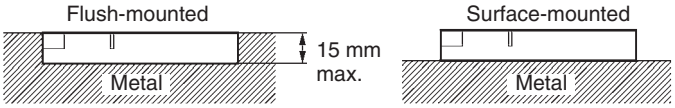

When the V600-D8KR04 is flush-mounted in a metal casing, the transmission range varies according to the width of the gap (*x*) between the metal and the Data Carrier, as shown in the following graphs.

**V600-D8KR04**

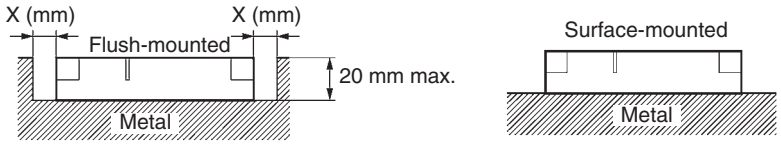


Flush-mounted in metal casing

Surface-mounted on metal

**When Combined With V600-HS63**

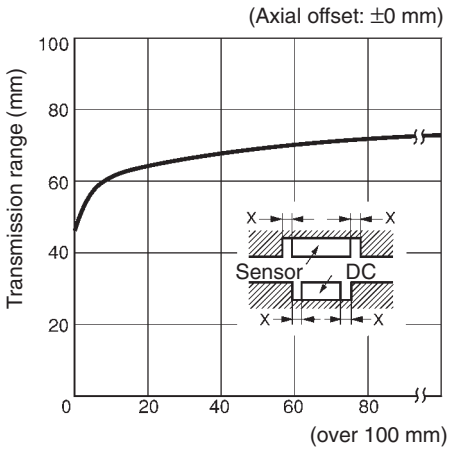


Gap between Sensor and metal (*x*)

**When Combined With V600-HS67**

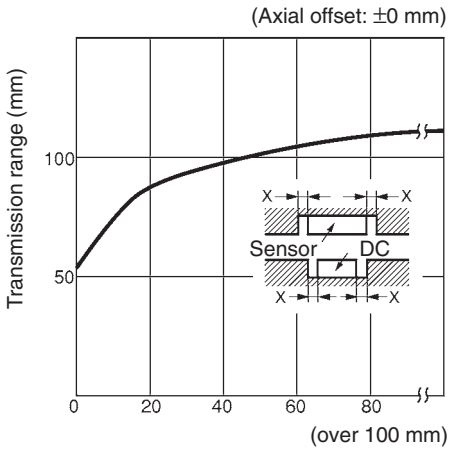


Gap between Sensor and metal (*x*)

**Effect of Misalignment**

The transmission range will be reduced if the Sensor does not face the Data Carrier directly when data is transmitted. Try to keep any misalignment below 10°, as shown in the following diagram.

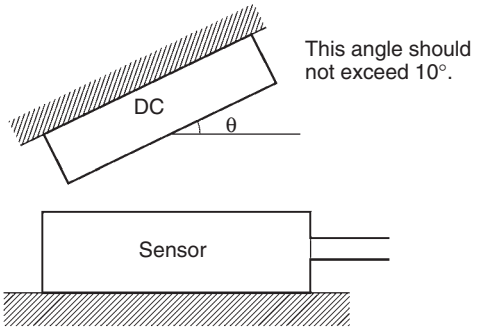

## V600-D2KR16 Data Carriers

**Installation Method**

Use the V600-A81 Holder (purchased separately) for installation. First secure the Holder with flat countersunk-head screws in at least two places, and tighten the screws to a torque of 0.3 to 0.5 N • m. Then insert the Data Carrier into this Holder by hand.

Be sure to attach the battery cover seal to the back of the Data Carrier. If this seal is not affixed, the IP protective structure standard IP50 will not be satisfied.

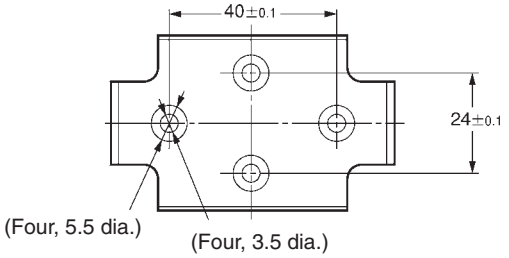


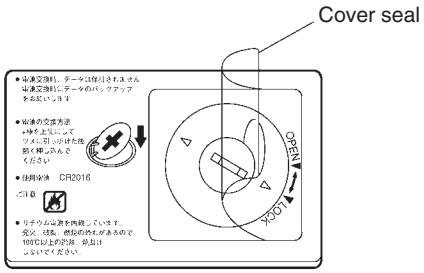


**Mounting in a Metal Casing**

The V600-D2KR16 can be either surface-mounted or flush-mounted in a metal casing. If mounted as shown in the following diagrams, there will be no effect on the transmission range.

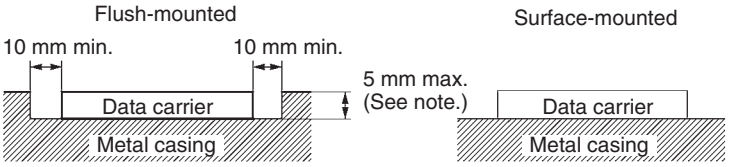


**Note** When the V600-A81 Holder is used, this becomes 9 mm max.

**Effect of Misalignment**

The transmission range will be reduced if the Sensor does not face the Data Carrier directly when data is transmitted. Try to keep any misalignment below 10°, as shown in the following diagram.

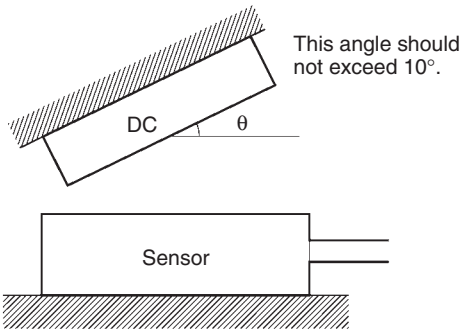

# SECTION 5
# Communicating With Host Devices

The V600-HAM42-DRT Intelligent Flag III can be used in connection with DeviceNet (CompoBus/D) Master Units. This section presents the timing charts and operation outlines for Intelligent Flag Amplifiers when communicating with a host device. Write a communications program for the host according to the timing charts shown in this section.


5-1 Read Operation in AUTO Mode . . . . . 62
5-2 Read Operation in SYNC Mode . . . . . 64
5-3 Write Operation in AUTO Mode . . . . . 66
5-4 Write Operation in SYNC Mode . . . . . 68
5-5 Sample Program for Host . . . . . 70
5-5-1 Sample Program . . . . . 70
5-6 Error Processing . . . . . 71

# 5-1 Read Operation in AUTO Mode

In AUTO mode, the Data Carrier (DC) can always be accessed when the $\overline{\text{INHIBIT}}$ input is ON while the V600-HAM42-DRT power is ON. Therefore the Data Carrier is automatically accessed when the Data Carrier enters the transmission area, with no need for a simultaneous trigger (TRG) input.

Read data will be output with the data output signal while the Data Carrier is within range.

If the Data Carrier is stopped within the transmission area after reading is accessed, it will not be accessed again. After the Data Carrier goes out of the transmission area, or after operation is stopped by the $\overline{\text{INHIBIT}}$ input turning OFF, the Data Carrier will revert to wait status.

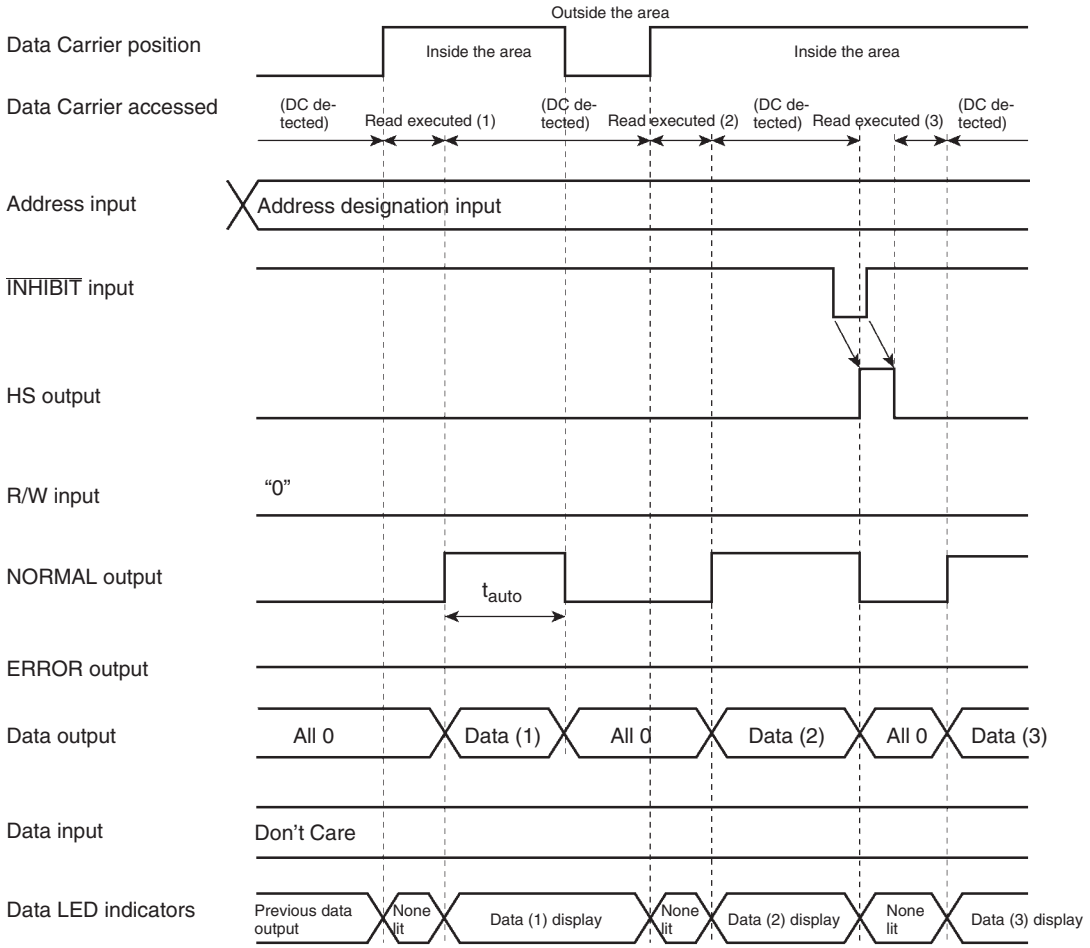


The output time $t_{auto}$ is the time that the Data Carrier is in the transmission area. If this time ($t_{auto}$) is shorter than the output time set by pin 1 of DIP switch 2 (output mode), the output will continue during the output time. (When the DIP switch pin is OFF, the output time is 100 ms; when ON, the output time is 500 ms.)

### Explanation

| Normal operation | When errors occur |
|---|---|
| (1) When the $\overline{\text{INHIBIT}}$ input turns ON (i.e., is set to “1”) at the host device, the Amplifier becomes ready for a Data Carrier (i.e., goes into a Data Carrier wait state). The initial status is for the data outputs to be all “0.”<br>(2) The Amplifier begins to access a Data Carrier and read data from it when a Data Carrier enters the transmission area. The data outputs are cleared to “0” and the LED indicators are turned OFF.<br>(3) When the read processing is completed, the Data Carrier’s data is output to the data output lines and the NORMAL output turns ON (i.e., is set to “1”). The data indicators also light.<br>(4) The data outputs and the NORMAL output are retained while the Data Carrier is in the transmission area.<br>(5) The data outputs and the NORMAL output are cleared to “0” as soon as the Data Carrier goes out of the transmission area. If the Data Carrier goes out of the transmission area before the time set by the output mode elapses, the data outputs and the NORMAL output will be cleared to “0” after the time set by the output mode elapses.<br>(6) The data LED indicators remain lit until the next Data Carrier enters the transmission area.<br>(7) If processing continues with the Data Carrier still in the transmission area (e.g., if the next data is read), turn the $\overline{\text{INHIBIT}}$ input OFF at the host device. (Leave the $\overline{\text{INHIBIT}}$ input OFF until the HS output turns ON.) This will clear the outputs and turn OFF the LED indicators. When the $\overline{\text{INHIBIT}}$ input is subsequently turned ON (i.e., cleared) the Data Carrier will again be detected and read processing will be executed. | Normally, an error occurs in AUTO mode when the Data Carrier is traveling so fast that the Data Carrier moves out of the transmission area even though the Sensor is still accessing the Data Carrier.<br>(1) When an error occurs, the error classification is output to the data output lines and the ERROR output signal turns ON. The error classification is also shown by the data LED indicators flashing red.<br>(2) The data outputs and the ERROR output are retained while the Data Carrier is in the transmission area.<br>(3) The data outputs and the ERROR output are cleared to “0” as soon as the Data Carrier goes out of the transmission area. If the Data Carrier goes out of the transmission area faster than the time set by the output mode, the data outputs and the ERROR output will be cleared to “0” after the time set by the output mode elapses.<br>(4) The data LED indicators remain lit until the next Data Carrier enters the transmission area.<br>(5) If processing (such as retries) continues with the Data Carrier still in the transmission area, turn the $\overline{\text{INHIBIT}}$ input OFF at the host device. (Leave the $\overline{\text{INHIBIT}}$ input OFF until the HS output turns ON.) This will clear the outputs and turn OFF the LED indicators. When the $\overline{\text{INHIBIT}}$ input is subsequently turned ON (i.e., cleared) the Data Carrier will again be detected and read processing will be executed. |

# 5-2 Read Operation in SYNC Mode

In SYNC mode, a trigger (TRG) input is awaited after the V600-HAM42-DRT's power is turned ON. The read or retry access is executed immediately following the TRG input. If a Data Carrier is in the transmission area at that time, the processing results will be output during the time set by DIP switch 2. If no Data Carrier is in the transmission area, this will be detected and treated as a "No Data Carrier" error.

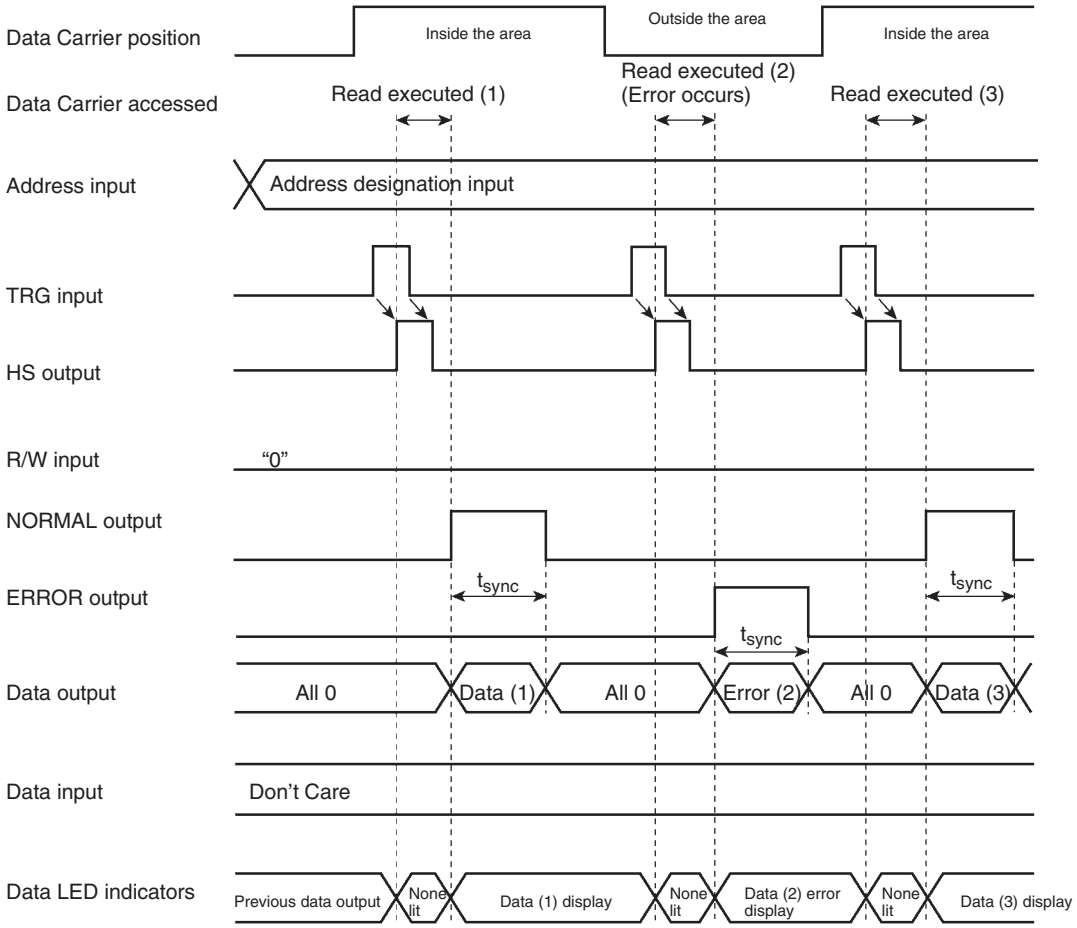


The output time $t_{sync}$ is 100 ms when pin 1 of DIP switch 2 (output mode) is OFF, and 500 ms when it is ON.

### Explanation

| Normal operation | When errors occur |
|---|---|
| (1) The trigger input is turned ON with the R/W input OFF at the host device and the Data Carrier in the transmission area.<br>**Note** Leave the trigger input ON until the HS output turns ON.<br>(2) When the trigger input's ON is detected, the input data is obtained and the HS output is turned ON. Then the process of reading from the Data Carrier begins. At this time the data outputs are cleared to "0" and the LED indicators are turned OFF.<br>(3) When the trigger input turns OFF, the HS output turns OFF.<br>(4) When the read processing is completed, the Data Carrier's data is sent to the data outputs and the NORMAL output is turned ON. The read data is displayed at the data LED indicators.<br>**Note** If the trigger input is still ON when the Data Carrier read processing is completed, the data will not be output until the trigger input turns OFF.<br>(5) The data output is obtained at the host device with the NORMAL output as the trigger.<br>(6) After the time set for the output mode has elapsed, the data outputs and the NORMAL output turn OFF. | Normally, an error occurs in SYNC mode if the trigger input is turned ON when no Data Carrier is in the transmission area.<br>(1) If the trigger input is turned ON when no Data Carrier is in the transmission area, this situation is treated as an "No Data Carrier" error.<br>(2) When an error occurs, the error classification is output to the data output lines and the ERROR output signal turns ON. The error classification is also shown by the data LED indicators flashing red.<br>(3) After the time set for the output mode has elapsed, the data outputs and the ERROR output turn OFF. |

# 5-3 Write Operation in AUTO Mode

In AUTO mode, either 16-bit or 8-bit data is written in any of the following three write modes: BYTE mode, BIT SET mode, and BIT CLR (clear) mode. In BYTE mode, the data is written just as it is. In BIT SET mode, only certain bits are turned ON. In BIT CLR mode, only certain bits are turned OFF. Since the basic timing chart is the same for these modes, this section describes only the BYTE mode as a reference example.

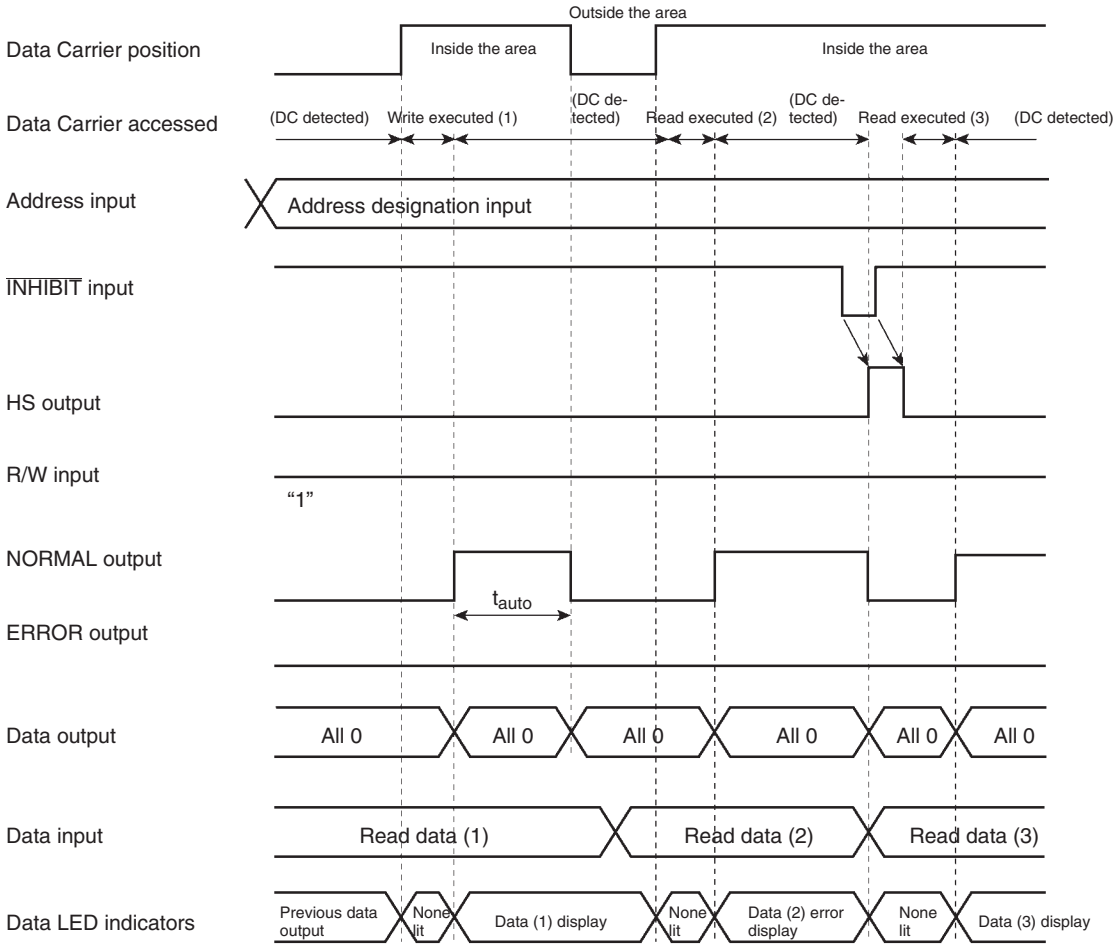


The output time $t_{auto}$ is the time that the Data Carrier is in the transmission area. If this time ($t_{auto}$) is shorter than the output time set by pin 1 of DIP switch 2 (output mode), the output will continue until this time is reached. (When the DIP switch pin is OFF, the output time is 100 ms; when ON, the output time is 500 ms.)

### Explanation

| Normal operation | When errors occur |
|---|---|
| (1) When the R/W input and the $\overline{\text{INHIBIT}}$ input turn ON (i.e., is set to “1”) at the host device, the Sensor becomes ready for a Data Carrier (i.e., goes into a Data Carrier wait state). The initial status is for the data outputs to be all “0.”<br>(2) Enter write data into the data input lines.<br>(3) When a Data Carrier enters the transmission area, the Sensor obtains the input data and begins to write data to the Data Carrier. The data outputs are cleared to “0” and the LED indicators are turned OFF.<br>(4) When the write processing is completed, the NORMAL output turns ON. At this time the write data is displayed at the data LED indicators.<br>(5) The NORMAL output is retained while the Data Carrier is in the transmission area.<br>(6) The NORMAL output is cleared to “0” as soon as the Data Carrier goes out of the transmission area. If the Data Carrier goes out of the transmission area before the time set by the output mode elapses, the NORMAL output will be cleared to “0” after the time set by the output mode elapses.<br>(7) The data LED indicators remain lit until the next Data Carrier enters the transmission area.<br>(8) If processing continues with the Data Carrier still in the transmission area (e.g., if the next data is written), turn the $\overline{\text{INHIBIT}}$ input OFF at the host device. This will clear the outputs and turn OFF the LED indicators. When the $\overline{\text{INHIBIT}}$ input is subsequently turned ON (i.e., cleared) the Data Carrier will again be detected and write processing will be executed.<br>**Note** Leave the $\overline{\text{INHIBIT}}$ input OFF until the HS output turns ON. | Normally, an error occurs in AUTO mode when the Data Carrier is traveling so fast that the Data Carrier moves out of the transmission area when the Sensor is still accessing the Data Carrier.<br>(1) When an error occurs, the error classification is output to the data output lines and the ERROR output signal turns ON. The error classification is also shown by the data LED indicators flashing red.<br>(2) The data outputs and the ERROR output are retained while the Data Carrier is in the transmission area.<br>(3) The data outputs and the ERROR output are cleared to “0” as soon as the Data Carrier goes out of the transmission area. If the Data Carrier goes out of the transmission area faster than the time set by the output mode, the data outputs and the ERROR output will be cleared to “0” after the time set by the output mode elapses.<br>(4) The data LED indicators remain lit until the next Data Carrier enters the transmission area.<br>(5) If processing (such as retries) continues with the Data Carrier still in the transmission area, turn the $\overline{\text{INHIBIT}}$ input OFF at the host device. This will clear the outputs and turn OFF the LED indicators. When the $\overline{\text{INHIBIT}}$ input is subsequently turned ON (i.e., cleared) the Data Carrier will again be detected and write processing will be executed.<br>**Note** Leave the $\overline{\text{INHIBIT}}$ input OFF until the HS output turns ON. |

# 5-4 Write Operation in SYNC Mode

In SYNC mode, just as in AUTO mode, either 16-bit or 8-bit data is written in any of the following three write modes: BYTE mode, BIT SET mode, and BIT CLR (clear) mode. In BYTE mode, the data is written just as it is. In BIT SET mode, only certain bits are turned ON. In BIT CLR mode, only certain bits are turned OFF. Since the basic timing chart is the same for these modes, this section describes only the BYTE mode as a reference example.

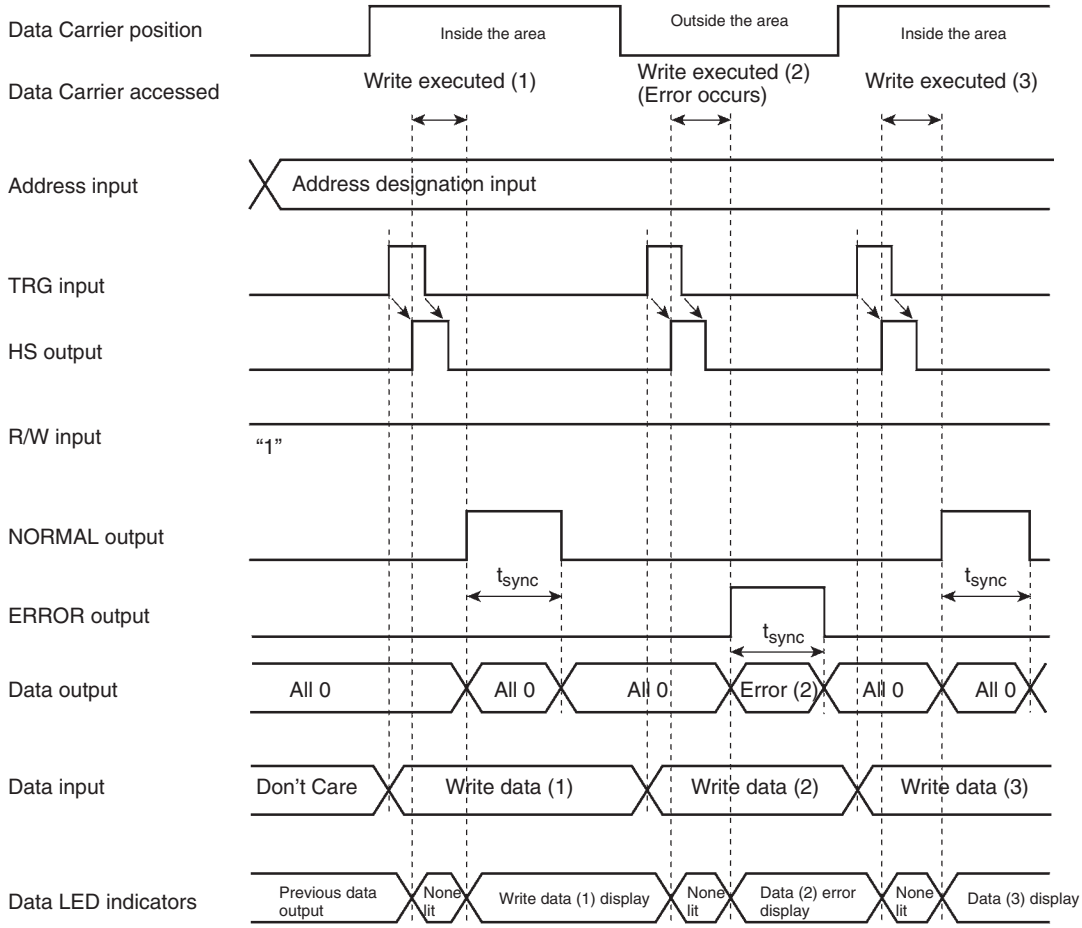


The output time $t_{sync}$ is 100 ms when pin 1 of DIP switch 2 (output mode) is OFF, and 500 ms when it is ON.

### Explanation

| Normal operation | When errors occur |
|---|---|
| (1) The trigger input is turned ON with the R/W input ON at the host device, and the write data output, and the Data Carrier in the transmission area.<br>**Note** Leave the trigger input ON until the HS output turns ON.<br>(2) When the trigger input's ON is confirmed, the input information is obtained and the HS output is turned ON. Then the process of writing to the Data Carrier begins. At this time the data outputs are cleared to "0" and the LED indicators are turned OFF.<br>(3) When the trigger input turns OFF, the HS output turns OFF.<br>(4) When the write processing is completed, all zeros are sent to the data outputs and the NORMAL output is turned ON. The write data is displayed at the data LED indicators.<br>**Note** If the trigger input is still ON when the writing to the Data Carrier is completed, the data will not be output until the trigger input turns OFF.<br>(5) The data output is obtained at the host device with the NORMAL output as the trigger.<br>(6) After the time set for the output mode elapses, the data outputs and the NORMAL output turn OFF. | Normally, an error occurs in SYNC mode if the trigger input signal is turned ON when no Data Carrier is in the transmission area, or if the Data Carrier moves out of the transmission area when the Sensor is still accessing the Data Carrier.<br>(1) If the trigger input is turned ON when no Data Carrier is in the transmission area, this situation is treated as an "No Data Carrier" error.<br>(2) When an error occurs, the error classification is output to the data output lines and the ERROR output signal turns ON. The error classification is also shown by the data LED indicators flashing red.<br>(3) After the time set for the output mode elapses, the data outputs and the ERROR output turn OFF. |

# 5-5 Sample Program for Host

## 5-5-1 Sample Program

In the following sample ladder program, two bytes of data are read in the trigger mode beginning with address 10. (It is assumed that a C200H-DRM21-V1 CompoBus/D Master is used with a V600-HAM42-DRT at node number 0.)

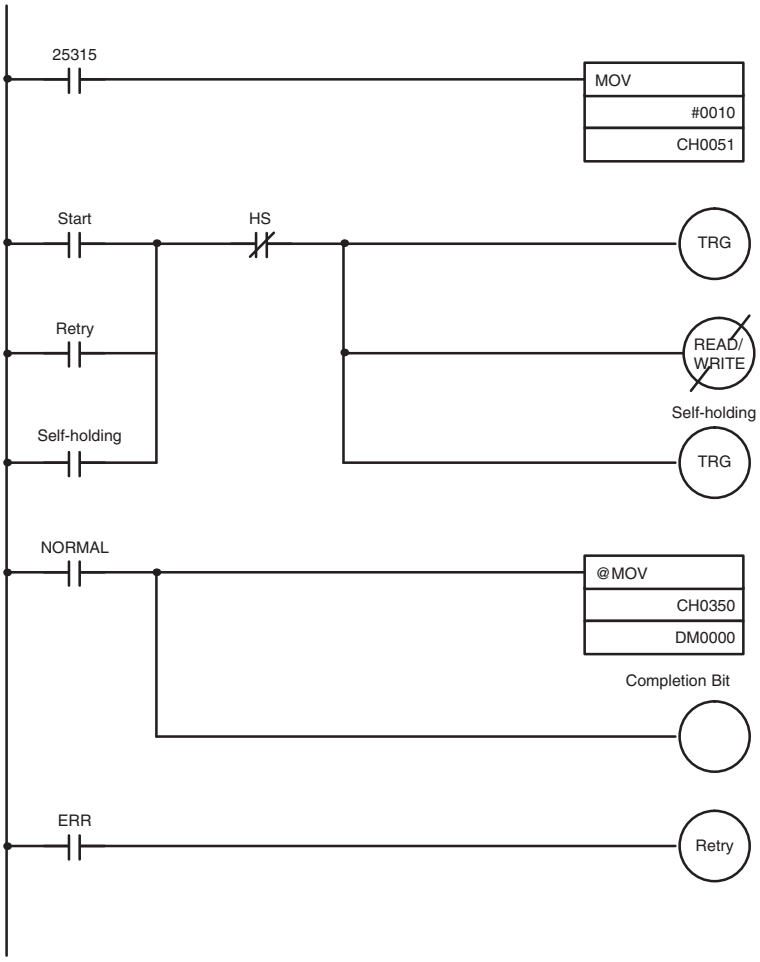


It takes some time for a CompoBus/D system to start up. Using the I/O Data Communicating Flag and the Error Flag in the Master's status area, create a program so that Slave I/O processing will not begin until the Master starts up and remote I/O communications are started. For details, refer to the *CompoBus/D (DeviceNet) Operation Manual (W267)*.

# 5-6 Error Processing

When an error occurs in communications with a Data Carrier, notification will be provided by both the LED indicators and the data outputs.

### Error Classification

| Indicator/output bit | Error name | Description | Treatment |
|---|---|---|---|
| 7 | Hardware error | A CPU error occurred due to excessive noise. | Reset the power supply. |
| 6 | Not used. | Not used. | Not used. |
| 5 | Not used. | Not used. | Not used. |
| 4 | Write protect error | An address was set in a write-protected area | Check the write-protected area and change the address. |
| 3 | Address error | An address was set outside of the Data Carrier's memory area. | Check the address. |
| 2 | No Data Carrier error | No Data Carrier was within the transmission area at the time of the trigger input. | Check the trigger input timing.<br>Check conditions such as the transmission distance. |
| 1 | Verification error (for writing only) | An error occurred in verification during write processing. | Check conditions such as speed and transmission distance. |
| 0 | Data Carrier transmission error | Data Carrier transmission was not completed due to an error. | Check conditions such as speed and transmission distance. |

# SECTION 6
# Chemical Resistance

This section provides information on the chemical resistance of Sensors and Data Carriers.


6-1 V600-HS51, V600-HS61, V600-HS63, and V600-HS67 Sensors . . . . . 74
6-2 Data Carriers . . . . . 75

# 6-1 V600-HS51, V600-HS61, V600-HS63, and V600-HS67 Sensors

ABS resin is used as casing material and epoxy resin is used as filler resin. Avoid using chemicals that may affect ABS resin and epoxy resin by referring to the tables below.

The Sensor is not explosion-proof.

**Note** The information on chemical resistance presented in this section must be used for reference purposes only. The change rates of Sensor characteristics vary with temperatures and chemical concentrations. Therefore, before using the Sensors in an actual production environment, always conduct tests to check for any problems.

**Chemicals that Cause Deformation, Cracks, etc.**

| ABS resin | Epoxy resin |
|---|---|
| Trichlene, acetone, xylene, toluene, gasoline, creosol, methylene chloride, phenol, cyclohexane, aqua regia, chromic acid, sulfuric acid (90% RT), methyl ethyl ketone, aniline, nitrobenzine, monochlorobenzine, pyridine, nitric acid (60% RT), formic acid (80% RT) | Aqua regia, chromic acid, sulfuric acid (90% RT), nitric acid (60% RT), ammonia solution, acetone, methylene chloride, phenol |

**Chemicals that may Cause Discoloration, Swelling, etc.**

| ABS resin | Epoxy resin |
|---|---|
| Hydrochloric acid, alcohol, Freon, sodium hydroxide, hydrogen peroxide, benzine, sulfuric acid (10% RT), nitric acid (10% RT), phosphoric acid (80% RT), ammonia solution | Sulfuric acid (10% RT), nitric acid (10% RT),hydrochloric acid (30% RT), acetic acid (50% RT), calcium hydroxide, benzine, creosol, alcohol, cyclohexane, toluene, xylene, benzine, grease |

**Chemicals that Do Not Affect ABS Resin or Epoxy Resin**

| ABS resin | Epoxy resin |
|---|---|
| Ammonia, kerosine, mineral oil, developer, Yushiroken S50, Chemi-Cool Z, Velocity No. 3, Yushiroken EEE-30Y, petroleum, grease acetate, calcium hydroxide, phosphoric acid (30% RT), hydrochloric acid (10% RT), potassium hydroxide | Ammonia, hydrochloric acid (10% RT), potassium hydroxide, petroleum, gasoline, Yushiroken S50, Chemi-Cool Z, Velocity No. 3, Yushiroken EEE-30Y |

**Note** Tests for these chemicals were conducted at room temperature (23°C). Chemicals that do not affect ABS or epoxy resin at room temperature (23°C) may affect them at higher or lower temperatures. Therefore, carefully examine the effects of these chemicals on ABS and epoxy resin beforehand.

# 6-2 Data Carriers

**Note** The information on chemical resistance and extracted substances presented in this section must be used for reference purposes only. The change rates of Data Carrier characteristics and the amounts of substances extracted vary with temperatures and chemical concentrations. Therefore, before using the Data Carrier in an actual production environment, always conduct tests to check for any problems.

## V600-D23P61, V600-D23P53, and V600-D23P54 EEPROM Data Carriers

## V600-D8KR12D, V600-D8KR13, and V600-D8KR04 SRAM Data Carriers

ABS resin is used as casing material and epoxy resin is used as filler resin. Avoid using chemicals that may affect ABS resin and epoxy resin by referring to the following tables.

**Chemicals that Cause Deformation, Cracks, etc.**

| ABS resin | Epoxy resin |
|---|---|
| Trichlene, acetone, xylene, toluene, gasoline, creosol, methylene chloride, phenol, cyclohexane, aqua regia, chromic acid, sulfuric acid (90% RT), methyl ethyl ketone, aniline, nitrobenzine, monochlorobenzine, pyridine, nitric acid (60% RT), formic acid (80% RT) | Aqua regia, chromic acid, sulfuric acid (90% RT), nitric acid (60% RT), ammonia solution, acetone, methylene chloride, phenol |

**Chemicals that may Cause Discoloration, Swelling, etc.**

| ABS resin | Epoxy resin |
|---|---|
| Hydrochloric acid, alcohol, Freon, sodium hydroxide, hydrogen peroxide, benzine, sulfuric acid (10% RT), nitric acid (10% RT), phosphoric acid (80% RT), ammonia solution | Sulfuric acid (10% RT), nitric acid (10% RT), hydrochloric acid (30% RT), acetic acid (50% RT), calcium hydroxide, benzine, creosol, alcohol, cyclohexane, toluene, xylene, benzine, grease |

**Chemicals that Do Not Affect ABS Resin or Epoxy Resin**

| ABS resin | Epoxy resin |
|---|---|
| Ammonia, kerosine, mineral oil, developer, Yushiroken S50, Chemi-Cool Z, Velocity No. 3, Yushiroken EEE-30Y, petroleum, grease acetate, calcium hydroxide, phosphoric acid (30% RT), hydrochloric acid (10% RT), potassium hydroxide | Ammonia, hydrochloric acid (10% RT), potassium hydroxide, petroleum, gasoline, Yushiroken S50, Chemi-Cool Z, Velocity No. 3, Yushiroken EEE-30Y |

**Note** Tests for these chemicals were conducted at room temperature 23°C. The chemicals that do not affect ABS or epoxy resin at room temperature 23°C may affect them at higher or lower temperatures. Therefore, carefully examine the effects of these chemicals on ABS and epoxy resin beforehand.

**⚠ CAUTION**

The V600-D23P71/P72 Data Carriers have no chemical and oil resistance. Do not use them in places exposed to spattering from chemicals and oil.

## V600-D23P66 and V600-A86 Data Carriers

PPS resin is used as material. Avoid using chemicals that may affect PPS resin by referring to the tables below.

| Chemical name | | Room temperature | 90° |
|---|---|---|---|
| Hydrochloric acid | 37% | A | A |
| | 10% | A | A |
| Sulfuric acid | 98% | A | B |
| | 50% | A | A |
| | 30% | A | A |
| | 3% | A | A |
| Nitric acid | 60% | B | C |
| | 40% | A | B |
| | 10% | A | A |
| Hydrogen fluoride solution | 40% | A | A |
| Chromic acid | 40% | A | A |
| Hydrogen peroxide solution | 28% | A | B |
| | 3% | A | A |
| Sodium hydroxide solution | 60% | A | A |
| | 10% | A | A |
| | 1% | A | A |
| Ammonia solution | 28% | A | B |
| | 10% | A | B |
| Sodium chloride | 10% | A | A |
| Sodium carbonate | 20% | A | A |
| | 2% | A | A |
| Sodium hypochlorite | | A | A |
| Phenol solution | 5% | A | A |
| Glacial acetic acid | | A | A |
| Acetic acid | | A | A |
| Oleic acid | | A | A |
| Methyl alcohol | 95% | A | A |
| Ethyl alcohol | 95% | A | A |
| Ethyl acetate | | A | A |
| Sebacic acid diethylhexyl | | A | A |
| Acetone | | A | A |
| Diethyl ether | | A | A |
| n-heptane | | A | A |
| 2-2-4 trimethylpentane | | A | A |
| Benzine | | A | A |
| Toluene | | A | A |
| Aniline | | A | A |
| Mineral oil | | A | A |
| Gasoline | | A | A |
| Insulating oil | | A | A |
| Dichloroethylene | | A | A |
| Carbon tetrachloride | | A | A |

A: Has no adverse effect, B: May cause discoloration, swelling, etc.,
C: Causes deformation, cracks, etc.

**Note** The above tables show the extent of changes in PPS resin that is exposed to each chemical at room temperature and at 90°C. If the Data Carrier is to be exposed to different chemicals, concentrations, and temperatures from those shown in the tables, always conduct tests before using the Data Carrier in such an environment.

## V600-D23P66SP Data Carriers

PFA is used as the exterior of the V600-D23P66SP Data Carrier. Before using the V600-D23P66SP, study the characteristics of PFA by reading the following reference:

### Chemical Resistance of Fluoroplastic PFA (Reference)

**PFA: Tetrafluorethylene-Perfluoroalkylvinylether copolymer**

Fluoroplastic PFA does not react with most chemicals except molten alkali metal, hot pressurized fluorine ($F_2$), and some halogen derivatives. The following tables show the results of tests in which PFA was soaked in or exposed to commonly used organic and inorganic chemicals. In these tests, a compression-molded test piece (1.3 mm thick) was soaked in the chemical at a specified temperature for a week (168 hours) and taken out of the chemical, then the weight change, tensile strength, and elongation of the test piece were immediately measured. If the change in the tensile strength is 15% or less, the change in the elongation is 10% or less, and the increase in the weight is less than 0.5%, the results of the test can be considered normal.

If PFA is exposed to trichloroacetic acid, tri-n-butyl phosphate, perchloroethylene, carbon tetrachloride, and other liquids (which easily make resin surfaces wet) at a high temperature, it tends to increase its weight due to absorption and reduce its tensile strength. Even when PFA absorbs chemicals and solvents, its molecular structure will not change. If, however, PFA is subject to temperature or pressure changes or mechanical damage when it has absorbed chemicals, the chemicals will repeatedly expand and contract inside PFA, causing mechanical problems such as cracks and bulging. In fact, this problem occurs with any kind of plastic.

### Inorganic Chemicals

| Chemicals | Test temperature (°C) | Resulting characteristics (%) | | Weight increase rate (%) |
|---|---|---|---|---|
| | | Tensile strength | Elongation | |
| Concentrated hydrochloric acid | 120 | 98 | 100 | 0.0 |
| Concentrated sulfuric acid | 120 | 95 | 98 | 0.0 |
| Hydrofluoric acid (60%) | 23 | 99 | 99 | 0.0 |
| Fuming sulfuric acid | 23 | 95 | 96 | 0.0 |
| Aqua regia | 120 | 99 | 100 | 0.0 |
| Chromic acid (50%) | 120 | 93 | 97 | 0.0 |
| Concentrated nitric acid | 120 | 95 | 98 | 0.0 |
| Fuming nitric acid | 23 | 99 | 99 | 0.0 |
| Concentrated ammonia solution | 66 | 98 | 100 | 0.0 |
| Caustic soda (50%) | 120 | 93 | 99 | 0.4 |
| Hydrogen peroxide solution (30%) | 23 | 93 | 95 | 0.0 |
| Bromine | 23 | 99 | 100 | 0.5 |
| Chlorine | 120 | 92 | 100 | 0.5 |
| Ferrous chloride (25%) | 100 | 93 | 98 | 0.0 |
| Zinc chloride (25%) | 100 | 96 | 100 | 0.0 |
| Sulfuryl chloride | 69 | 83 | 100 | 2.7 |
| Chlorosulfonic acid | 151 | 91 | 100 | 0.0 |
| Concentrated phosphoric acid | 100 | 93 | 100 | 0.0 |

### Organic Chemicals

| Chemicals | Test temperature (°C) | Resulting characteristics (%) | | Weight increase rate (%) |
|---|---|---|---|---|
| | | Tensile strength | Elongation | |
| Glacial acetic acid | 118 | 95 | 100 | 0.4 |
| Acetic anhydride | 139 | 91 | 99 | 0.3 |
| Trichloroacetic acid | 196 | 90 | 100 | 2.2 |
| Isooctane | 99 | 94 | 100 | 0.7 |
| Naphtha | 100 | 91 | 100 | 0.5 |
| Mineral oil | 180 | 87 | 95 | 0.0 |
| Toluene | 110 | 88 | 100 | 0.7 |
| o-creosol | 191 | 92 | 96 | 0.2 |
| Nitrobenzine | 210 | 90 | 100 | 0.7 |
| Benzyl alcohol | 205 | 93 | 99 | 0.3 |
| Aniline | 185 | 94 | 100 | 0.3 |
| n-butylamine | 78 | 86 | 97 | 0.4 |
| Ethylenediamine | 117 | 96 | 100 | 0.1 |
| Tetrahydrofuran | 66 | 88 | 100 | 0.7 |
| Benzaldehyde | 179 | 90 | 99 | 0.5 |
| Cyclohexane | 156 | 92 | 100 | 0.4 |
| Methyl ethyl ketone | 80 | 90 | 100 | 0.4 |
| Acetophenone | 202 | 90 | 100 | 0.6 |
| Dimethylphthalate | 200 | 98 | 100 | 0.3 |
| n-butyl acetate | 125 | 93 | 100 | 0.5 |
| Tri-n-butyl phosphate | 200 | 91 | 100 | 2.0 |
| Methylene chloride | 40 | 94 | 100 | 0.8 |
| Perchloroethylene | 121 | 86 | 100 | 2.0 |
| Carbon tetrachloride | 77 | 87 | 100 | 2.3 |
| Dimethyl formamide | 154 | 96 | 100 | 0.2 |
| Dimethyl sulfoxide | 189 | 95 | 100 | 0.1 |
| Dioxane | 101 | 92 | 100 | 0.6 |
| Reference: *Fluoroplastics Handbook*, The Nikkan Kogyo Shimbun Ltd. (Takaomi Satogawa) | | | | |

### Substances Extracted from Data Carrier (Reference)

If chemicals penetrate into the built-in Data Carrier through PFA, ions may be extracted from the Data Carrier.

- **Results of Ion-exchange Chromatography**

  The built-in Data Carrier was soaked in hot water (100°C for 16 hours), and extracted ions were analyzed. The results are shown below.

  - Extracted Ions (Concentration)
    $Cl^-$ . . . . 0.5 p.p.m. $Na^+$ . . . . 10 p.p.m.
    $NH_4^+$ . . 11 p.p.m. $K^+$ . . . . . 1.0 p.p.m.

- **Results of ICP Emission Spectral Analysis**

  The V600-D23P66SP Data Carrier was soaked in concentrated hydrochloric acid (which can easily penetrate through PFA) at 80°C for 300 hours, then extracted substances were analyzed.

  - Extracted Substances (Concentration)
    Si . . . . . 700 ng/ml S . . . . . 1000 ng/ml
    Ca . . . . . 30 ng/ml

# Appendix A
## Accessories (Sold Separately)

| Item | Specification | Model | Remarks |
|---|---|---|---|
| Data Carrier Holder 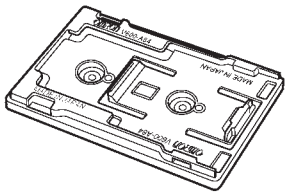 | For V600-D23P71 or V600-D23P72 Data Carriers | V600-A84 | When attaching the Holder to plastic objects, it can either be screwed in place or ultrasonically welded.<br>The Holders can also be pilled up to act as spacers to provide more space between the Data Carrier and the mounting surface. |
| Data Carrier Attachment 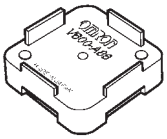 | For V600-D23P66 only | V600-A86 | --- |
| Data Carrier Holder 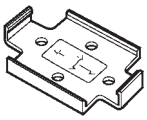 | For V600-D2KR16 only | V600-A81 | Secured with M3 plain-head screws (in at least two places). |
| Lithium Battery (CR2016) | For V600-D2KR16 only | V600-A82 | CR2016 commercially available, with battery cover tool. |

# Appendix B
## I/O Allocation

The following table gives the I/O allocations for the V600-HAM42-DRT when using the C200HW-DRM21-V with fixed allocation.

| V600-HAM42 node address | 00 | 01 | 02 | to | n | n+1 |
|---|---|---|---|---|---|---|
| PC output signals, V600 input signals | 05000 to 05115 | 05100 to 05215 | 05200 to 05315 | . . . | 05000+n×100 to 05115+n×100 | 05000+(n+1)×100 to 05115+(n+1)×100 |
| PC input signals, V600 output signals | 35000 to 35115 | 35100 to 35215 | 35200 to 35315 | . . . | 35000+n×100 to 35115+n×100 | 35000+(n+1)×100 to 35115+(n+1)×100 |

Example: I/O allocations for the V600-HAM42-DRT node address “00”

| PC output signals (V600-HAM42-DRT input signals) | | PC input signals (V600-HAM-DRT output signals) | |
|---|---|---|---|
| 05000 (ID0) | For specifying 16 bits (ID0 to ID15) of write data to be written to the Data Carrier. | 35000 (OD0) | For transferring 16 bits (OD0 to OD15) of read data from the Data Carrier. (Displayed by the data indicators on the Amplifier.) |
| 05001 (ID1) | | 35001 (OD1) | |
| 05002 (ID2) | | 35002 (OD2) | |
| 05003 (ID3) | | 35003 (OD3) | |
| 05004 (ID4) | | 35004 (OD4) | |
| 05005 (ID5) | | 35005 (OD5) | |
| 05006 (ID6) | | 35006 (OD6) | |
| 05007 (ID7) | | 35007 (OD7) | |
| 05008 (ID8) | | 35008 (OD8) | |
| 05009 (ID9) | | 35009 (OD9) | |
| 05010 (ID10) | | 35010 (OD10) | |
| 05011 (ID11) | | 35011 (OD11) | |
| 05012 (ID12) | | 35012 (OD12) | |
| 05013 (ID13) | | 35013 (OD13) | |
| 05014 (ID14) | | 35014 (OD14) | |
| 05015 (ID15) | | 35015 (OD15) | |
| 05100 (ADDR0) | For specifying the address in the Data Carrier, for read or write to be performed. Setting range: C0 Hex to FF Hex. | 35100 (EXT OD16) | For transferring 8 bits (OD16 to OD23) of read data from the Data Carrier. (Not displayed by data indicators on the Amplifier.) |
| 05101 (ADDR1) | | 35101 (EXT OD17) | |
| 05102 (ADDR2) | | 35102 (EXT OD18) | |
| 05103 (ADDR3) | | 35103 (EXT OD19) | |
| 05104 (ADDR4) | | 35104 (EXT OD20) | |
| 05105 (ADDR5) | | 35105 (EXT OD21) | |
| 05106 (ADDR6) | | 35106 (EXT OD22) | |
| 05107 (ADDR7) | | 35107 (EXT OD23) | |
| 05108 (WT_MODE1) | Write mode switching signal | 35108 (Not used) | Not used. |
| 05109 (WT_MODE2) | | 35109 (Not used) | |
| 05110 (WT_BYTE) | 16/8 bit switching signal (for write) | 35110 (Not used) | |
| 05111 (WT_AREA) | Area specification signal (when writing in 8 bits) | 35111 (Not used) | |
| 05112 (Reserved) | Always “0” | 35112 (Not used) | |
| 05113 (Reserved) | | 35113 (ERROR) | Transmission error stop signal |
| 05114 (READ/WRITE) | Read/write switching signal | 35114 (NORMAL) | Normal transmission completion signal |
| 05115 (INHIBIT/TRG) | INHIBIT/TRG switching signal | 35115 (HS) | Handshake signal |

# Appendix C
## Multi-vendor Applications

## Connecting an OMRON Slave to another Company's Configurator

When another company's configurator (a device that makes environment settings on DeviceNet Masters and Slaves) is connected, it will be able to read settings from OMRON Masters and Slaves but not change them.

When another company's configurator is being used, we recommend creating an OMRON Slaves EDS file (a file that contains each Slave's parameters and operating information).

For creation of an EDS file, refer to the following Device profile. For more information on how to create an EDS file, refer to the manual for the configurator used.

## V600-HAM42-DRT Device Profile

| | | | |
|---|---|---|---|
| General Data | Compatible DeviceNet specifications | Volume I - Release 1.3<br>Volume II - Release 1.3 | |
| | Vendor name | OMRON Corporation | Header ID = 47 |
| | Device profile name | Slaves: Generic | Profile number = 0 |
| | Product catalog number | Manual number (W267) | |
| | Product revision | 1.3 | |
| Physical conformance data | Network current consumption | 40 mA max. (24 VDC) | |
| | Connector type | Open plug | |
| | Physical insulation | Yes | |
| | Supported indicators | Module, Network | |
| | MAC ID setting | DIP switch | |
| | Default MAC ID | 0 | |
| | Baud rate setting | DIP switch | |
| | Support baud rates | 125 kbps, 250 kbps, 500 kbps | |
| Communications data | Predefined Master/Slave connection set | Group 2 only server | |
| | Dynamic connection supported (UCMM) | No | |
| | Explicit message fragmentation support | Yes | |

## Object Mounting

### Identity Object (0x01)

| | | |
|---|---|---|
| Object class | Attribute | Not supported |
| | Service | Not supported |

| Item | | ID content | Get (read) | Set (write) | Value |
|---|---|---|---|---|---|
| Object instance | Attribute | 1 Vendor | Yes | No | 47 |
| | | 2 Product type | Yes | No | 0 |
| | | 3 Product code | Yes | No | 202 |
| | | 4 Revision | Yes | No | 1.3 |
| | | 5 Status (bits supported) | Yes | No | Bit 0 only |
| | | 6 Serial number | Yes | No | Unique for each Unit |
| | | 7 Product name | Yes | No | V600-HAM42 (see note) |
| | | 8 State | No | No | --- |

**Note** "DRT" is omitted because the number of characters that can be registered at once is limited.

| Item | | DeviceNet service | Parameter option |
|---|---|---|---|
| Object instance | Service | 05 Reset | No |
| | | 0E Get_Attribute_Single | No |

## Message Router Object (0x02)

| | | |
|---|---|---|
| Object class | Attribute | Not supported |
| | Service | Not supported |
| Object instance | Attribute | Not supported |
| | Service | Not supported |
| Addition of user's unique specification | | None |

## DeviceNet Object (0x03)

| | | |
|---|---|---|
| Object class | Attribute | Not supported |
| | Service | Not supported |

| Item | | ID content | Get (read) | Set (write) | Value |
|---|---|---|---|---|---|
| Object instance | Attribute | 1 MAC ID | Yes | No | --- |
| | | 2 Baud rate | Yes | No | --- |
| | | 3 BOI | Yes | No | 00 (hexadecimal) |
| | | 4 Bus Off counter | No | No | --- |
| | | 5 Allocation information | Yes | No | --- |
| | | 6 MAC ID switch changed | No | No | --- |
| | | 7 Baud rate switch changed | No | No | --- |
| | | 8 MAC ID switch value | No | No | --- |
| | | 9 Baud rate switch value | No | No | --- |

| Item | | DeviceNet service | Parameter option |
|---|---|---|---|
| Object instance | Service | 0E Get_Attribute_Single | No |
| | | 4B Allocate_Master/Slave_Connection_Set | No |
| | | 4C Release_Master/Slave_Connection_Set | No |

## Connection Object (0x05)

| | | |
|---|---|---|
| Object class | Attribute | Not supported |
| | Service | Not supported |
| | Max. number of active connections | 1 |

| Item | Section | Information | Max. number of interfaces |
|---|---|---|---|
| Object instance 1 | Instance type | Explicit Message | 1 |
| | Production trigger | Cyclic | --- |
| | Transport type | Server | --- |
| | Transport class | 3 | --- |

| Item | | ID content | Get (read) | Set (write) | Value |
|---|---|---|---|---|---|
| Object instance 1 | Attribute | 1 State | Yes | No | --- |
| | | 2 Instance type | Yes | No | 00 (hexadecimal) |
| | | 3 Transport class trigger | Yes | No | 83 (hexadecimal) |
| | | 4 Produced connection ID | Yes | No | --- |
| | | 5 Consumed connection ID | Yes | No | --- |
| | | 6 Initial comm. characteristics | Yes | No | 21 (hexadecimal) |
| | | 7 Produced connection size | Yes | No | 0D00 (hexadecimal) |
| | | 8 Consumed connection size | Yes | No | 0D00 (hexadecimal) |
| | | 9 Expected packet rate | Yes | Yes | --- |
| | | 12 Watchdog time-out action | Yes | No | 01 |
| | | 13 Produced connection path length | Yes | No | 00 |
| | | 14 Produced connection path | Yes | No | --- |
| | | 15 Consumed connection path length | Yes | No | 00 |
| | | 16 Consumed connection path | Yes | No | --- |

| Item | | DeviceNet service | Parameter option |
|---|---|---|---|
| Object instance 1 | Service | 05 Reset | No |
| | | 0E Get_Attribute_Single | No |
| | | 10 Set_Attribute_Single | No |

| Item | Section | Information | Max. number of instances |
|---|---|---|---|
| Object instance 2 | Instance type | Polled I/O | 1 |
| | Production trigger | Cyclic | --- |
| | Transport type | Server | --- |
| | Transport class | 2 | --- |

| Item | | ID content | Get (read) | Set (write) | Value |
|---|---|---|---|---|---|
| Object instance 2 | Attribute | 1 State | Yes | No | --- |
| | | 2 Instance type | Yes | No | 01 (hexadecimal) |
| | | 3 Transport class trigger | Yes | No | 82 (hexadecimal) |
| | | 4 Produced connection ID | Yes | No | --- |
| | | 5 Consumed connection ID | Yes | No | --- |
| | | 6 Initial comm. characteristics | Yes | No | 01 (hexadecimal) |
| | | 7 Produced connection size | Yes | No | 0400 (hexadecimal) |
| | | 8 Consumed connection size | Yes | No | 0400 (hexadecimal) |
| | | 9 Expected packet rate | Yes | Yes | --- |
| | | 12 Watchdog time-out action | Yes | No | 00 |
| | | 13 Produced connection path length | Yes | No | 06 |
| | | 14 Produced connection path | Yes | No | 20, 04, 24, 01, 30, 03 |
| | | 15 Consumed connection path length | Yes | No | 06 |
| | | 16 Consumed connection path | Yes | No | 20, 04, 24, 01, 30, 03 |

| Item | | DeviceNet service | Parameter option |
|---|---|---|---|
| Object instance 2 | Service | 05 Reset | No |
| | | 0E Get_Attribute_Single | No |
| | | 10 Set_Attribute_Single | No |

| Item | Section | Information | Max. number of interfaces |
|---|---|---|---|
| Object instance 3 | Instance type | Bit strobed I/O | 1 |
| | Production trigger | Cyclic | --- |
| | Transport type | Server | --- |
| | Transport class | 2 | --- |

| Item | | ID content | Get (read) | Set (write) | Value |
|---|---|---|---|---|---|
| Object instance 3 | Attribute | 1 State | Yes | No | --- |
| | | 2 Instance type | Yes | No | 01 (hexadecimal) |
| | | 3 Transport class trigger | Yes | No | 82 (hexadecimal) |
| | | 4 Produced connection ID | Yes | No | --- |
| | | 5 Consumed connection ID | Yes | No | --- |
| | | 6 Initial comm. characteristics | Yes | No | 01 (hexadecimal) |
| | | 7 Produced connection size | Yes | No | 0400 (hexadecimal) |
| | | 8 Consumed connection size | Yes | No | 0400 (hexadecimal) |
| | | 9 Expected packet rate | Yes | Yes | --- |
| | | 12 Watchdog time-out action | Yes | No | 00 |
| | | 13 Produced connection path length | Yes | No | 06 |
| | | 14 Produced connection path | Yes | No | 20, 04, 24, 01, 30, 03 |
| | | 15 Consumed connection path length | Yes | No | 06 |
| | | 16 Consumed connection path | Yes | No | 20, 04, 24, 01, 30, 03 |

| Item | | DeviceNet service | Parameter option |
|---|---|---|---|
| Object instance 3 | Service | 05 Reset | No |
| | | 0E Get_Attribute_Single | No |
| | | 10 Set_Attribute_Single | No |

# Appendix D
## Conformity to Standards

## EC Directive

### We hereby declare that the following product is in conformity with the requirements of the following EC Directive:

**Identification System**

| | |
|---|---|
| **Read/Write Head Amplifier:** | **V600-HAM42-DRT Series** |
| **Sensor :** | **V600-HS63** |
| **Data Carrier:** | **V600-D Series** |
| **No. of Directive:** | **89/336/EEC** |
| **Title of Directive:** | **Electromagnetic Compatibility** |

The above referenced product conforms to the following standards:

**Electromagnetic Compatibility**

| | |
|---|---|
| EMI (Electromagnetic Interference) | |
| Radiated | EN50081-2: 1993/EN55011: 1991 |
| EMS (Electromagnetic Susceptibility) | |
| Electrostatic Discharge | EN50082-2: 1995/EN61000-4-2: 1995 |
| RF Electromagnetic Field | EN50082-2: 1995/ENV50140: 1993 |
| RF Common Mode | EN50082-2: 1995/ENV50141: 1993 |
| Electrical Fast Transient Burst | EN50082-2: 1995/EN61000-4-4: 1995 |
| Power-frequency Magnetic Field | EN50082-2: 1995/EN61000-4-8: 1993 |

## Technical Data

Factory: OMRON Corporation, Ayabe Factory
3-2 Narutani, Nakayama-cho, Ayabe-shi, Kyoto 623-0105,
JAPAN

## Intended Environment: Industrial

**Read/Write Head Amplifier**

| | |
|---|---|
| 1. Type Designation | : V600-HAM42-DRT Series |
| 2. Host Interface | : DeviceNet |
| 3. Sensor Connectable | : 1 channel |
| 4. Rated Power Supply Voltage | : 24 VDC |
| 5. Acceptable Power Supply Voltage | : 18 to 26.4 VDC |
| 6. Power Consumption | : 3.2 W max. |
| 7. Dielectric Strength | : 500 VAC,between live parts and protective earth conductor. |
| 8. Ambient Temperature | : Operating 0°C to 55°C<br>Storage –25°C to 65°C |
| 9. Pollution Degree | : 2 (Controlled environment) |

## Electromagnetic Compatibility (EMC)

| | |
|---|---|
| a) Field Withstandability | : 10 V/m |
| b) RF Common Mode | : 10 V |
| c) Electrostatic Discharge Withstandability | : 4 kV (Contact)<br>8 kV (Air) |
| d) Fast Transient Withstandability | : 2 kV (DC power)<br>1 kV (Signal line) |
| e) Power-frequency Magnetic Field | : 30 A/m, 50 Hz |
| f) Radiated Emission | : Class A, Group 1 |

# Nomenclature

## Read/Write Head Amplifiers

**V600-HAM42-DRT Series**

**V600-HAM42-DRT-□-□**
**1 2 3 4**

1: Inductive identification system
2: Read/Write Head Amplifier - DeviceNet interface
3: Blank - First version
4: Blank - Standard model

## Read/Write Head Sensor

**V600-HS63**
**1 2 3**

1: Inductive identification system
2: Read/Write Head Sensor
3: Square type

## Data Carriers

**V600-D□□□-□**
**1 2 3 4 5 6**

| | | | |
|---|---|---|---|
| 1: | Inductive identification system | | |
| 2: | Data Carrier | | |
| 3: | Memory capacity | -2K | 2 Kbytes |
| | | -8K | 8 Kbytes |
| | | -23 | 256 bytes |
| 4: | Memory type | -R | SRAM |
| | | -P | EEPROM |
| 5: | Serial number | | |
| 6: | Blank | -Standard model | |
| | Suffix(es) | -For marketing purposes | |

# FCC (Federal Communications Commission)

## FCC Part 15 Subpart B

For a Class A digital device or peripheral, the instructions furnished the user shall include the following or similar statement placed in a prominent location in the text of the manual:

**Note** This equipment has been tested and found to comply with the limits for a Class A digital device, pursuant to Part 15 of the FCC Rules. These limits are designed to provide reasonable protection against harmful interference when the equipment is operated in a commercial environment. This equipment generates, uses, and can radiate radio frequency energy and, if not installed and used in accordance with the instruction manual, may cause harmful interference to radio communications. Operation of this equipment in a residential area is likely to cause harmful interference in which case the user will be required to correct the interference at his own expense.

# Revision History

A manual revision code appears as a suffix to the catalog number on the front cover of the manual.

Cat. No. Z129-E1-02

Revision code

The following table outlines the changes made to the manual during each revision. Page numbers refer to the previous version.

| Revision code | Date | Revised content |
|---|---|---|
| 1 | February 1999 | Original production |
| 01A | January 2005 | **Page v:** Warranty and liability information added to the beginning of manual, signal word and alert symbols modified, and style of safety information in the body of the manual changed.<br>**Page ix:** Information on standard conformity added to the beginning of manual. |
| 02 | June 2020 | Changes due to the end of production of V600-D8KR12 Tag |

**OMRON Corporation** **Industrial Automation Company**
**Kyoto, JAPAN**
**Contact: www.ia.omron.com**

***Regional Headquarters***
**OMRON EUROPE B.V.**
Wegalaan 67-69, 2132 JD Hoofddorp
The Netherlands
Tel: (31)2356-81-300/Fax: (31)2356-81-388

**OMRON ELECTRONICS LLC**
2895 Greenspoint Parkway, Suite 200
Hoffman Estates, IL 60169 U.S.A.
Tel: (1) 847-843-7900/Fax: (1) 847-843-7787

**OMRON ASIA PACIFIC PTE. LTD.**
No. 438A Alexandra Road # 05-05/08 (Lobby 2),
Alexandra Technopark,
Singapore 119967
Tel: (65) 6835-3011/Fax: (65) 6835-2711

**OMRON (CHINA) CO., LTD.**
Room 2211, Bank of China Tower,
200 Yin Cheng Zhong Road,
PuDong New Area, Shanghai, 200120, China
Tel: (86) 21-5037-2222/Fax: (86) 21-5037-2200

**Authorized Distributor:**

© OMRON Corporation 1999-2020 All Rights Reserved.
In the interest of product improvement,
specifications are subject to change without notice.

**Cat. No. Z129-E1-03** 0620(0299)

Cat. No. Z129-E1-02 V600 RFID System V600-HAM42-DRT Intelligent Flag III (DeviceNet-compatible) OPERATION MANUAL OMRON