Cat. No. W377-E1-04

生産終了
DISCONTINUED

SYSMAC
CPM2C-S
CPM2C-S100C/S110C/S100C-DRT/S110C-DRT
Programmable Controller

OPERATION MANUAL

OMRON

CPM2C-S Programmable Controller

Operation Manual

Revised September 2009

Notice:

OMRON products are manufactured for use according to proper procedures by a qualified operator and only for the purposes described in this manual.

The following conventions are used to indicate and classify precautions in this manual. Always heed the information provided with them. Failure to heed precautions can result in injury to people or damage to property.

⚠ DANGER Indicates an imminently hazardous situation which, if not avoided, will result in death or serious injury.

⚠ WARNING Indicates a potentially hazardous situation which, if not avoided, could result in death or serious injury.

⚠ Caution Indicates a potentially hazardous situation which, if not avoided, may result in minor or moderate injury, or property damage.

OMRON Product References

All OMRON products are capitalized in this manual. The word “Unit” is also capitalized when it refers to an OMRON product, regardless of whether or not it appears in the proper name of the product.

The abbreviation “Ch,” which appears in some displays and on some OMRON products, often means “word” and is abbreviated “Wd” in documentation in this sense.

The abbreviation “PC” means Programmable Controller and is not used as an abbreviation for anything else.

Visual Aids

The following headings appear in the left column of the manual to help you locate different types of information.

Note Indicates information of particular interest for efficient and convenient operation of the product.

1,2,3... 1. Indicates lists of one sort or another, such as procedures, checklists, etc.

© OMRON, 2000

All rights reserved. No part of this publication may be reproduced, stored in a retrieval system, or transmitted, in any form, or by any means, mechanical, electronic, photocopying, recording, or otherwise, without the prior written permission of OMRON.

No patent liability is assumed with respect to the use of the information contained herein. Moreover, because OMRON is constantly striving to improve its high-quality products, the information contained in this manual is subject to change without notice. Every precaution has been taken in the preparation of this manual. Nevertheless, OMRON assumes no responsibility for errors or omissions. Neither is any liability assumed for damages resulting from the use of the information contained in this publication.

TABLE OF CONTENTS

PRECAUTIONS xv

1 Intended Audience xvi
2 General Precautions xvi
3 Safety Precautions xvi
4 Operating Environment Precautions xviii
5 Application Precautions xviii
6 EC Directives xx
7 3-tier Communications with CX-Programmer xxi

SECTION 1
Introduction 1

1-1 CPM2C-S Features and Functions 2
1-2 System Configurations 10
1-3 CPM2C-S Structure and Operation 17
1-4 Functions Listed by Usage 25
1-5 Comparison with the CPM2C 27
1-6 Preparation for Operation 31

SECTION 2
Unit Components and Specifications 33

2-1 Specifications 34
2-2 Unit Components 43

SECTION 3
Installation and Wiring 53

3-1 Design Precautions 54
3-2 Selecting an Installation Site 55
3-3 Installing the CPM2C-S 57
3-4 Wiring and Connections 60

SECTION 4
Memory Areas 83

4-1 Allocation of Word and Bit Addresses 84
4-2 I/O Allocation for CPM2C-S PCs 89
4-3 I/O Allocation to CompoBus/S Slaves 91
4-4 SR Area 92
4-5 AR Area 95
4-6 PC Setup 99
4-7 Basic PC Operation and I/O Processes 105
4-8 Error Log 110

SECTION 5
Exchanging Data with CompoBus/S Slaves 111

5-1 Initial Settings 112
5-2 Remote I/O Communications 113
5-3 Communications Status 115

TABLE OF CONTENTS

SECTION 6
Exchanging Data with a DeviceNet Master 117

6-1 Initial Settings 118
6-2 Remote I/O Communications 118
6-3 Explicit Message Communications 121
6-4 Status Information 135

SECTION 7
Cycle Time and I/O Response Time 139

7-1 Cycle Time. 140
7-2 I/O Response Time 153
7-3 Interrupt Processing Time 155
7-4 One-to-one PC Link I/O Response Time. 156

SECTION 8
Using Programming Devices 159

8-1 Using a Programming Console 160
8-2 Programming Console Operations. 166
8-3 Programming Example 193

SECTION 9
Test Runs and Error Processing 201

9-1 Initial System Checks and Test Run Procedure. 202
9-2 Self-diagnostic Functions 203
9-3 Programming Console Operation Errors 206
9-4 Programming Errors 207
9-5 Troubleshooting Flowcharts 208
9-6 Maintenance Inspections 216
9-7 Battery Replacement 217

SECTION 10
Expansion Memory Unit. 219

10-1 Overview 220
10-2 Specifications and Nomenclature 221
10-3 Handling 222

Appendices

A Standard Models 229
B Dimensions 235
C Support Software 237

Index 239

Revision History 245

About this Manual:

The CPM2C-S is a compact, high-speed Programmable Controller (PC) designed for control operations in systems requiring from 10 to 106 I/O points per PC. There are two manuals describing the setup and operation of the CPM2C-S: The *CPM2C-S Operation Manual* (this manual) and the *CPM1/CPM1A/CPM2A/CPM2C/SRM1(-V2) Programming Manual* (W353). (The *CPM1/CPM1A/CPM2A/CPM2C/SRM1(-V2) Programming Manual* is referred to as simply the *Programming Manual* in this manual.)

This manual describes the system configuration and installation of the CPM2C-S and provides a basic explanation of operating procedures for the Programming Consoles. It also introduces the capabilities of the SYSMAC Support Software (SSS) and SYSMAC-CPT Support Software. Read this manual first to acquaint yourself with the CPM2C-S.

Refer to the *CPM2C Programmable Controller Operation Manual* (W356) for descriptions of the specifications and installation of Expansion I/O Units and refer to the *CPM1/CPM1A/CPM2A/CPM2C/SRM1(-V2) Programmable Controllers Programming Manual* (W353) for descriptions of the specifications and installation of Expansion Units.

The *SYSMAC Support Software Operation Manuals: Basics* and *C-series PCs* (W247 and W248) provide descriptions of SSS operations for the CPM2C-S and other SYSMAC C-series PCs. The *SYSMAC-CPT Support Software Quick Start Guide* (W332) and *User Manual* (W333) provide descriptions of ladder diagram operations in the Windows environment. The *CX-Programmer User Manual* (W361) and the *CX-Server User Manual* (W362) provide details of operations for the WS02-CXPC1-E CX-Programmer.

Please read this manual carefully and be sure you understand the information provided before attempting to install and operate the CPM2C-S.

Section 1 describes the special features and functions of the CPM2C-S, shows the possible system configurations, and outlines the steps required before operation. Read this section first when using the CPM2C-S for the first time.

Section 2 provides the technical specifications of the CPM2C-S CPU Unit, Adapter Units, and AC Power Supply Unit and describes the main components of these Units.

Section 3 provides information on installing and wiring a CPM2C-S PC. Be sure to follow the directions and precautions in this section when installing the CPM2C-S in a panel or cabinet, wiring the power supply, or wiring I/O.

Section 4 describes the structure of the CPM2C-S' memory areas and explains how to use them.

Section 5 explains how to exchange data with CompoBus/S Slaves when using the CPM2C-S as a CompoBus/S Master.

Section 6 explains how to exchange data with a CPM2C-S100C-DRT or CPM2C-S110C-DRT DeviceNet Master.

Section 7 explains the cycle time and I/O response time in CPM2C-S PCs. Refer to this section when writing the user program to improve operation and reduce response delays.

Section 8 outlines the operations possible with the Programming Consoles.

Section 9 describes procedures for test runs of CPM2C-S operation, self-diagnosis functions, and error processing to identify and correct the hardware and software errors that can occur during PC operation.

Section 10 describes how to use the CPM1-EMU01-V1 Expansion Memory Unit. Follow the handling precautions and procedures to properly use the Unit.

Appendix A provides tables of CPM2C-S Units and related products.

Appendix B provides the dimensions of CPM2C-S CPU Units.

Appendix C provides the support software limitations and precautions.

⚠ **WARNING** Failure to read and understand the information provided in this manual may result in personal injury or death, damage to the product, or product failure. Please read each section in its entirety and be sure you understand the information provided in the section and related sections before attempting any of the procedures or operations given.

Read and Understand this Manual

Please read and understand this manual before using the product. Please consult your OMRON representative if you have any questions or comments.

Warranty and Limitations of Liability

WARRANTY
OMRON's exclusive warranty is that the products are free from defects in materials and workmanship for a period of one year (or other period if specified) from date of sale by OMRON. OMRON MAKES NO WARRANTY OR REPRESENTATION, EXPRESS OR IMPLIED, REGARDING NON-INFRINGEMENT, MERCHANTABILITY, OR FITNESS FOR PARTICULAR PURPOSE OF THE PRODUCTS. ANY BUYER OR USER ACKNOWLEDGES THAT THE BUYER OR USER ALONE HAS DETERMINED THAT THE PRODUCTS WILL SUITABLY MEET THE REQUIREMENTS OF THEIR INTENDED USE. OMRON DISCLAIMS ALL OTHER WARRANTIES, EXPRESS OR IMPLIED.

LIMITATIONS OF LIABILITY
OMRON SHALL NOT BE RESPONSIBLE FOR SPECIAL, INDIRECT, OR CONSEQUENTIAL DAMAGES, LOSS OF PROFITS OR COMMERCIAL LOSS IN ANY WAY CONNECTED WITH THE PRODUCTS, WHETHER SUCH CLAIM IS BASED ON CONTRACT, WARRANTY, NEGLIGENCE, OR STRICT LIABILITY. In no event shall the responsibility of OMRON for any act exceed the individual price of the product on which liability is asserted. IN NO EVENT SHALL OMRON BE RESPONSIBLE FOR WARRANTY, REPAIR, OR OTHER CLAIMS REGARDING THE PRODUCTS UNLESS OMRON'S ANALYSIS CONFIRMS THAT THE PRODUCTS WERE PROPERLY HANDLED, STORED, INSTALLED, AND MAINTAINED AND NOT SUBJECT TO CONTAMINATION, ABUSE, MISUSE, OR INAPPROPRIATE MODIFICATION OR REPAIR.

Application Considerations

SUITABILITY FOR USE

OMRON shall not be responsible for conformity with any standards, codes, or regulations that apply to the combination of products in the customer's application or use of the products.

At the customer's request, OMRON will provide applicable third party certification documents identifying ratings and limitations of use that apply to the products. This information by itself is not sufficient for a complete determination of the suitability of the products in combination with the end product, machine, system, or other application or use.

The following are some examples of applications for which particular attention must be given. This is not intended to be an exhaustive list of all possible uses of the products, nor is it intended to imply that the uses listed may be suitable for the products:

- Outdoor use, uses involving potential chemical contamination or electrical interference, or conditions or uses not described in this manual.
- Nuclear energy control systems, combustion systems, railroad systems, aviation systems, medical equipment, amusement machines, vehicles, safety equipment, and installations subject to separate industry or government regulations.
- Systems, machines, and equipment that could present a risk to life or property.

Please know and observe all prohibitions of use applicable to the products.

NEVER USE THE PRODUCTS FOR AN APPLICATION INVOLVING SERIOUS RISK TO LIFE OR PROPERTY WITHOUT ENSURING THAT THE SYSTEM AS A WHOLE HAS BEEN DESIGNED TO ADDRESS THE RISKS, AND THAT THE OMRON PRODUCTS ARE PROPERLY RATED AND INSTALLED FOR THE INTENDED USE WITHIN THE OVERALL EQUIPMENT OR SYSTEM.

PROGRAMMABLE PRODUCTS

OMRON shall not be responsible for the user's programming of a programmable product, or any consequence thereof.

Disclaimers

CHANGE IN SPECIFICATIONS

Product specifications and accessories may be changed at any time based on improvements and other reasons.

It is our practice to change model numbers when published ratings or features are changed, or when significant construction changes are made. However, some specifications of the products may be changed without any notice. When in doubt, special model numbers may be assigned to fix or establish key specifications for your application on your request. Please consult with your OMRON representative at any time to confirm actual specifications of purchased products.

DIMENSIONS AND WEIGHTS

Dimensions and weights are nominal and are not to be used for manufacturing purposes, even when tolerances are shown.

PERFORMANCE DATA

Performance data given in this manual is provided as a guide for the user in determining suitability and does not constitute a warranty. It may represent the result of OMRON's test conditions, and the users must correlate it to actual application requirements. Actual performance is subject to the OMRON Warranty and Limitations of Liability.

ERRORS AND OMISSIONS

The information in this manual has been carefully checked and is believed to be accurate; however, no responsibility is assumed for clerical, typographical, or proofreading errors, or omissions.

PRECAUTIONS

This section provides general precautions for using the Programmable Controller (PC) and related devices.

The information contained in this section is important for the safe and reliable application of the Programmable Controller. You must read this section and understand the information contained before attempting to set up or operate a PC system.

1 Intended Audience xvi
2 General Precautions xvi
3 Safety Precautions xvi
4 Operating Environment Precautions. xviii
5 Application Precautions xviii
6 EC Directives xx
7 3-tier Communications with CX-Programmer xxi

1 Intended Audience

This manual is intended for the following personnel, who must also have knowledge of electrical systems (an electrical engineer or the equivalent).

- Personnel in charge of installing FA systems.
- Personnel in charge of designing FA systems.
- Personnel in charge of managing FA systems and facilities.

2 General Precautions

The user must operate the product according to the performance specifications described in the operation manuals.

Before using the product under conditions which are not described in the manual or applying the product to nuclear control systems, railroad systems, aviation systems, vehicles, combustion systems, medical equipment, amusement machines, safety equipment, and other systems, machines, and equipment that may have a serious influence on lives and property if used improperly, consult your OMRON representative.

Make sure that the ratings and performance characteristics of the product are sufficient for the systems, machines, and equipment, and be sure to provide the systems, machines, and equipment with double safety mechanisms.

This manual provides information for programming and operating the Unit. Be sure to read this manual before attempting to use the Unit and keep this manual close at hand for reference during operation.

⚠ WARNING It is extremely important that a PC and all PC Units be used for the specified purpose and under the specified conditions, especially in applications that can directly or indirectly affect human life. You must consult with your OMRON representative before applying a PC System to the above-mentioned applications.

3 Safety Precautions

⚠ WARNING Connect the ground terminal of the Power Supply Unit (CPM2C-PA201) to a ground or 100 Ω or less. Not doing so may result in electric shock.

⚠ WARNING Do not attempt to take any Unit apart while the power is being supplied. Doing so may result in electric shock.

⚠ WARNING Do not touch any of the terminals or terminal blocks while the power is being supplied. Doing so may result in electric shock.

⚠ WARNING Do not attempt to disassemble, repair, or modify any Units. Any attempt to do so may result in malfunction, fire, or electric shock.

⚠ WARNING Provide safety measures in external circuits (i.e., not in the Programmable Controller), including the following items, in order to ensure safety in the system if an abnormality occurs due to malfunction of the PC or another external factor affecting the PC operation. Not doing so may result in serious accidents.

- Emergency stop circuits, interlock circuits, limit circuits, and similar safety measures must be provided in external control circuits.
- The PC will turn OFF all outputs when its self-diagnosis function detects any error or when a severe failure alarm (FALS) instruction is executed. As a countermeasure for such errors, external safety measures must be provided to ensure safety in the system.
- The PC outputs may remain ON or OFF due to deposition or burning of the output relays or destruction of the output transistors. As a countermeasure for such problems, external safety measures must be provided to ensure safety in the system.
- If the 24-VDC output (service power supply) of the Power Supply Unit (CPM2C-PA201) is overloaded or shorted, the voltage may drop causing outputs to turn OFF. External safety measures must be provided to ensure safety in the system in such an event.

⚠ **WARNING** When handling the Memory Backup Battery, never drop, disassemble, distort, short-circuit, recharge, heat to a temperature exceeding 100°C, or throw into fire. Otherwise the Battery may explode, catch fire, or leak fluid.

⚠ **WARNING** When transferring programs to other nodes, or when making changes to I/O memory, confirm the safety of the destination node before transfer. Not doing so may result in injury.

⚠ **Caution** Execute online edit only after confirming that no adverse effects will be caused by extending the cycle time. Otherwise, the input signals may not be readable.

⚠ **Caution** Tighten the screws on the terminal block of the Power Supply Unit (CPM2C-PA201) to a torque of 0.74 to 0.9 N•m. Loose screws may result in burning or malfunction.

⚠ **Caution** Do not connect the 24-VDC output (service power supply) or the Power Supply Unit (CPM2C-PA201) to an AC power supply. Connecting it to an AC power supply will damage the internal circuit.

⚠ **Caution** When connecting a personal computer or other peripheral device to the CPM2C-S, either ground the 0 V side of the CPM2C-S or do not ground at all. Depending on the method of grounding, the 24-V power supply may short-circuit; do not ground the 24-V side as shown in the following diagram.

Example: Connections where 24-V Power Supply Will Short-circuit

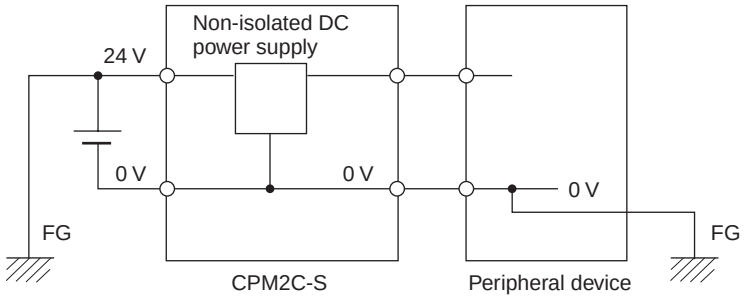

4 Operating Environment Precautions

⚠ **Caution** Do not operate the control system in the following places:

- Locations subject to direct sunlight.
- Locations subject to temperatures or humidity outside the range specified in the specifications.
- Locations subject to condensation as the result of severe changes in temperature.
- Locations subject to corrosive or flammable gases.
- Locations subject to dust (especially iron dust) or salts.
- Locations subject to exposure to water, oil, or chemicals.
- Locations subject to shock or vibration.

⚠ **Caution** Take appropriate and sufficient countermeasures when installing systems in the following locations:

- Locations subject to static electricity or other forms of noise.
- Locations subject to strong electromagnetic fields.
- Locations subject to possible exposure to radioactivity.
- Locations close to power supplies.

⚠ **Caution** The operating environment of the PC System can have a large effect on the longevity and reliability of the system. Improper operating environments can lead to malfunction, failure, and other unforeseeable problems with the PC System. Be sure that the operating environment is within the specified conditions at installation and remains within the specified conditions during the life of the system.

5 Application Precautions

Observe the following precautions when using the PC System.

⚠ **WARNING** Always heed these precautions. Failure to abide by the following precautions could lead to serious or possibly fatal injury.

- Always connect to a ground such that the grounding resistance does not exceed 100 Ω when installing the Units. Not connecting to the correct ground may result in electric shock.
- Always turn OFF the power supply to the PC before attempting any of the following. Not turning OFF the power supply may result in malfunction or electric shock.
  - Assembling the Units.
  - Connecting or disconnecting the Expansion I/O Units or Expansion Units.
  - Connecting or wiring the cables.
  - Connecting or disconnecting the connectors.
  - Setting DIP switches.
  - Replacing the battery

⚠ **Caution** Failure to abide by the following precautions could lead to faulty operation of the PC or the system, or could damage the PC or PC Units. Always heed these precautions.

- Fail-safe measures must be taken by the customer to ensure safety in the event of incorrect, missing, or abnormal signals caused by broken signal lines, momentary power interruptions, or other causes.
- Emergency stop circuits, interlock circuits, limit circuits, and similar safety measures must be provided in external control circuits.
- Construct a control circuit so that power supply for the I/O circuits does not come ON before power supply for the Unit. If power supply for the I/O circuits comes ON before power supply for the Unit, normal operation may be temporarily interrupted.
- If the operating mode is changed from RUN or MONITOR mode to PROGRAM mode, with the IOM Hold Bit ON, the output will hold the most recent status. In such a case, ensure that the external load does not exceed specifications. (If operation is stopped because of an operation error (including FALS instructions), the values in the internal memory of the CPU Unit will be saved, but the outputs will all turn OFF.)
- Install the CPM2C-S and Expansion I/O Units properly so that they will not fall off.
- Be sure that the terminal blocks and other items with locking devices are properly locked into place. Improper locking may result in malfunction.
- Be sure that terminal blocks and connectors are connected in the specified direction with the correct polarity. Not doing so may result in malfunction.
- Use the Unit with the battery housing cover in place to prevent dust or foreign matter from entering inside the Unit. Not doing so may result in malfunction.
- Install the expansion I/O connector cover to the last Unit (Expansion Unit or Expansion I/O Unit) to prevent dust or foreign matter from entering inside the Unit. Not doing so may result in malfunction.
- Be sure to attach the labels supplied with the CPM2C-S or provide other protective covers when wiring in order to prevent dust or wiring cuttings from entering the Unit.
- Remove the label after the completion of wiring to ensure proper heat dissipation. Leaving the label attached may result in malfunction.
- Use round crimp terminals for wiring the Power Supply Unit (CPM2C-PA201). Do not connect bare stranded wires directly to terminals. Connection of bare stranded wires may result in burning.
- Be sure to perform wiring in accordance with the CPM2C-S Operation Manual. Incorrect wiring may result in burning.
- Do not apply voltages to the input terminals in excess of the rated input voltage. Excess voltages may result in burning.
- Do not apply voltages or connect loads to the output terminals in excess of the maximum switching capacity. Excess voltage or loads may result in burning.
- Install external breakers and take other safety measures against short-circuiting in external wiring. Insufficient safety measures against short-circuiting may result in burning.
- Always use the power supply voltage specified in the operation manuals. An incorrect voltage may result in malfunction or burning.

- In areas with an unreliable power supply, install devices that will ensure a reliable power supply within the rated voltage and frequency ranges.
- Check the user program for proper execution before actually running it on the Unit. Not checking the program may result in an unexpected operation.
- Double-check all wiring and switch settings before turning ON the power supply. Incorrect wiring or switch settings may result in burning.
- Confirm that no adverse effect will occur in the system before attempting any of the following. Not doing so may result in an unexpected operation.
  - Changing the operating mode of the PC.
  - Force-setting/force-resetting any bit in memory.
  - Changing the present value of any word or any set value in memory.
- Before touching the Unit, be sure to first touch a grounded metallic object in order to discharge any static built-up. Not doing so may result in malfunction or damage.
- Do not pull on the cables or bend the cables beyond their natural limit. Doing either of these may break the cables.
- Do not apply forces exceeding 50 N to connector sections.
- Do not place objects on top of the cables. Doing so may break the cables.
- Resume operation only after transferring to the new CPU Unit the contents of the DM and HR Areas required for resuming operation. Not doing so may result in an unexpected operation.
- When handling the battery, never short-circuit, recharge, disassemble, heat excessively, incinerate, or subject the battery to excessive force. Subjecting the battery to excessive forces such as dropping the battery on the floor can cause the battery to leak.
- Install the Unit properly as specified in the operation manual. Improper installation of the Unit may result in malfunction.
- When transporting the Units, use special packing boxes. Be careful not to apply excessive vibration or shock during transportation and not to drop the product.
- Store the Units within the following temperature and humidity ranges:
  Storage temperature: –20 to 75°C, storage humidity: 10% to 90% (with no icing or condensation)

6 EC Directives

6-1 Applicable Directives

- EMC Directives
- Low Voltage Directive

6-2 Concepts

EMC Directives

OMRON devices that comply with EC Directives also conform to the related EMC standards so that they can be more easily built into other devices or the overall machine. The actual products have been checked for conformity to EMC standards (see the following note). Whether the products conform to the standards in the system used by the customer, however, must be checked by the customer.

EMC-related performance of the OMRON devices that comply with EC Directives will vary depending on the configuration, wiring, and other conditions of the equipment or control panel on which the OMRON devices are installed.

The customer must, therefore, perform the final check to confirm that devices and the overall machine conform to EMC standards.

Note Applicable EMC (Electromagnetic Compatibility) standards are as follows:

EMS (Electromagnetic Susceptibility): EN61131-2
EMI (Electromagnetic Interference): EN61000-6-4
(Radiated emission: 10-m regulations)

Low Voltage Directive

Always ensure that devices operating at voltages of 50 to 1,000 VAC and 75 to 1,500 VDC meet the required safety standards for the PC (EN61131-2).

6-3 Conformance to EC Directives

The CPM2C-S PCs comply with EC Directives. To ensure that the machine or device in which the CPM2C-S PC is used complies with EC Directives, the PC must be installed as follows:

1,2,3...

1. The CPM2C-S PC must be installed within a control panel.
2. Reinforced insulation or double insulation must be used for the DC power supplies used for the communications and I/O power supplies.
3. CPM2C-S PCs complying with EC Directives also conform to the Common Emission Standard (EN61000-6-4). Radiated emission characteristics (10-m regulations) may vary depending on the configuration of the control panel used, other devices connected to the control panel, wiring, and other conditions. You must therefore confirm that the overall machine or equipment complies with EC Directives.

7 3-tier Communications with CX-Programmer

Communication between CX-Programmer and the CPM2C-S is possible over a maximum of three network tiers, with the following limitation.

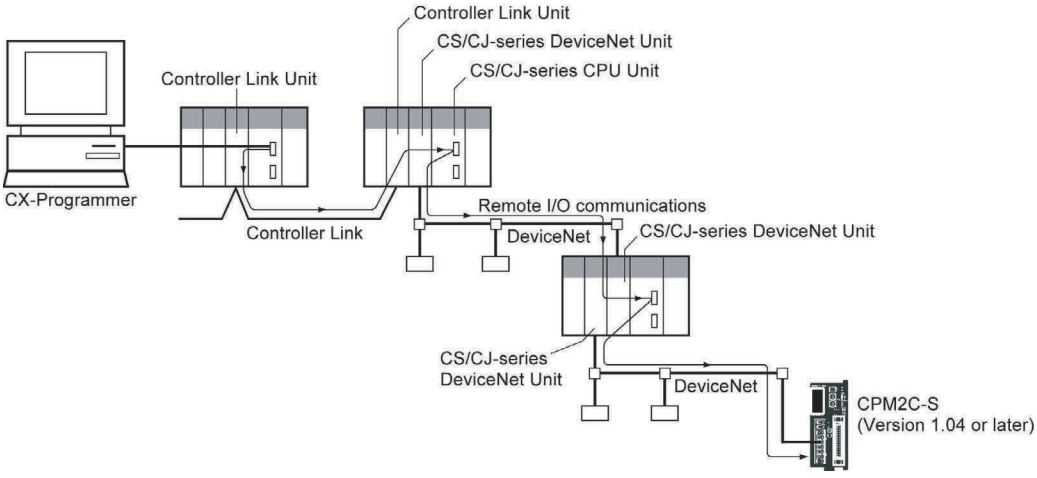

CPM2C-S CPU Unit Limitation

For CPM2C-S CPU Units, the above feature is supported for all CPU Units manufactured on 11 September 2001 or later. The manufacturing number for these CPU Units is 1191O or later. Confirm the manufacturing number before attempting to use this feature.

Reading Manufacturing Numbers

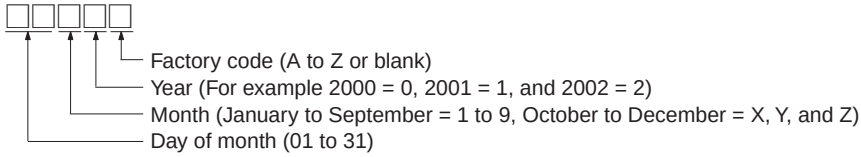

Supported Communications

DeviceNet systems (A CS/CJ-series DeviceNet Unit must be mounted on CS/CJ-series CPU Racks connected to the CPM2C-S.)

FA networks (Controller Link, SYSMAC LINK)

Office networks, Ethernet

Reference

FINS commands, such as CMND, SEND, and RECV, cannot be sent to or received from the CPM2C-S.

SECTION 1
Introduction

This section describes the special features and functions of the CPM2C-S, shows the possible system configurations, and outlines the steps required before operation. Read this section first when using the CPM2C-S for the first time.

Refer to the *CPM1/CPM1A/CPM2A/CPM2C/SRM1(-V2) Programming Manual* (W353) for details on programming operations.

1-1 CPM2C-S Features and Functions 2
1-1-1 CPM2C-S Features 2
1-1-2 Overview of CPM2C-S Functions 8
1-2 System Configurations 10
1-2-1 CPU Units and AC Power Supply Units 10
1-2-2 CompoBus/S Interface 11
1-2-3 CPU Unit, Expansion Units, and Expansion I/O Units 12
1-2-4 DeviceNet Interface 15
1-2-5 Adapter Units 16
1-3 CPM2C-S Structure and Operation 17
1-3-1 CPM2C-S Structure 17
1-3-2 Operating Modes 18
1-3-3 Operating Mode at Startup 18
1-3-4 PC Operation at Startup 19
1-3-5 Cyclic Operation and Interrupts 21
1-4 Functions Listed by Usage 25
1-5 Comparison with the CPM2C 27
1-6 Preparation for Operation 31

1-1 CPM2C-S Features and Functions

1-1-1 CPM2C-S Features

The CPM2C-S PCs are compact CPM2C PCs that have been equipped with the functions of a CompoBus/S Master. The CPM2C-S incorporates a variety of special features just like the CPM2C, including synchronized pulse control, interrupt inputs, pulse outputs, and a clock function.

- The standard CompoBus/S interface increases the PC's I/O capacity, reduces wiring, and saves space.

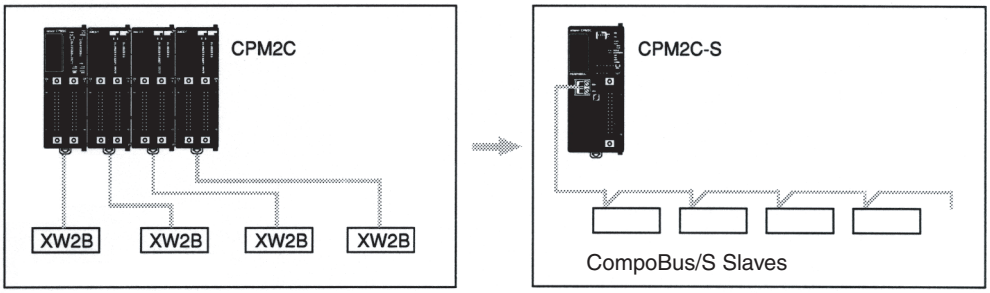

- The CPM2C-S is a compact Unit, so it can be incorporated into almost any machine. Furthermore, the CPM2C-S CPU Unit can be mounted in any direction.
- The CPM2C-S100C-DRT and CPM2C-S110C-DRT are also equipped with DeviceNet Slave functions to provide distributed control through a DeviceNet connection with a host PC.
- The CPM2C-S itself can handle a wide range of machine control applications. In addition, the CPM2C-S is capable of communications with devices such as personal computers and OMRON Programmable Terminals so it is ideal to use to expand or upgrade existing systems.

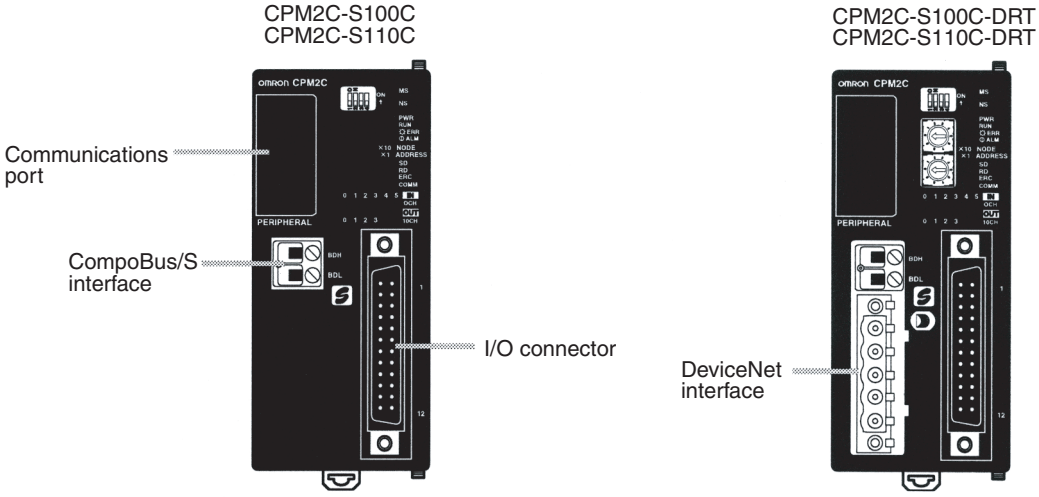

- The CPM2C-S CPU Unit has a total of 10 I/O points: 6 inputs and 4 transistor outputs. Up to 3 CPM2C-series Expansion I/O Units can be connected for a maximum I/O capacity of 106 I/O points with three 32-point Expansion I/O Units. It is possible to connect up to 362 I/O points by adding Slaves through the CompoBus/S system.
- The communications port can be used simultaneously as two ports: Peripheral and RS-232C. The peripheral port supports Programming Devices, Host Link, and no-protocol communications. The RS-232C port

supports Host Link, no-protocol (serial), 1:1 Link, and 1:1 NT Link communications.

- Connect up to 3 Expansion Units such as CPM2C-series Analog I/O Units, Temperature Sensor Units, or CompoBus/S I/O Link Units for CompoBus/S Slave functions.

CompoBus/S Master Functions

Up to 32 CompoBus/S Slaves can be connected to create a Remote I/O Link with up to 256 I/O points. It is easy to build an efficient, long-range distributed system with less wiring by connecting CompoBus/S I/O Terminals, Analog Terminals, Sensor Terminals, and Bit Chain Terminals.

Example System Configuration

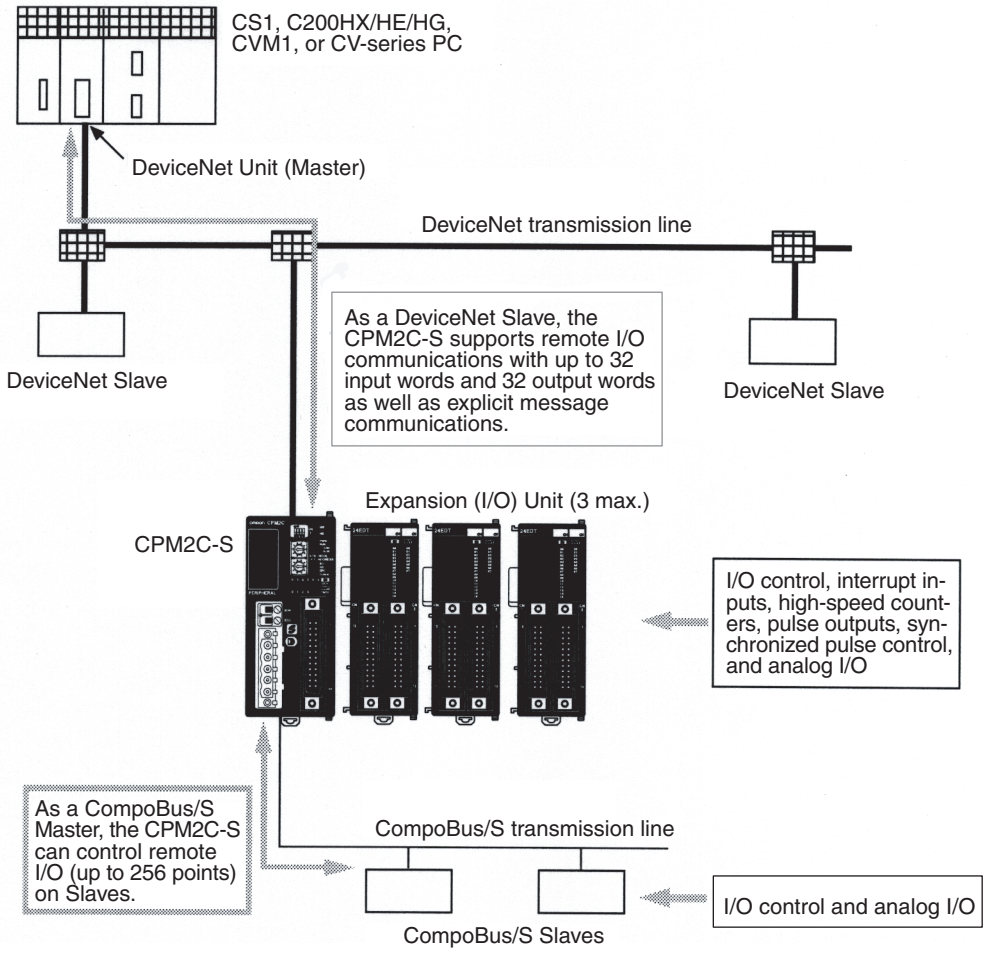

DeviceNet Slave Functions (-DRT Models Only)

When the CPM2C-S is used as a DeviceNet Slave, an I/O Link of up to 1,024 points (512 inputs and 512 outputs) can be created with the Master. The input and output areas used in the I/O Link can be allocated independently and the data areas, starting addresses, and size of these Read/Write areas can be specified freely. (The Read/Write areas can be set in the PC Setup or using the DeviceNet Configurator.)

Explicit message communications can be initiated from the Master to read or write data in any data area in the CPM2C-S.

Basic Functions

CPU Unit Variations

The CPM2C-S PCs are one-piece PCs with 10 I/O points (6 inputs and 4 outputs) in a built-in connector. There are 2 types of outputs available (sinking transistor outputs, and sourcing transistor outputs). All CPM2C-S PCs require a 24-VDC power supply.

Expansion I/O Units and CompoBus/S Slaves

CompoBus/S Slaves and up to 3 Expansion I/O Units can be connected to the CPU Unit to increase the PC's I/O capacity to a maximum of 362 I/O points. There are 23 different Expansion I/O Units available, including Units with 32 I/O points, 24 I/O points, 20 I/O points, 10 I/O points, 8 input points, 8 output points, 16 inputs points, and 16 output points. The maximum I/O capacity of 106 I/O points is achieved by connecting three 32-point Expansion I/O Units to the CPU Unit.

The CompoBus/S Master functions allow I/O Slaves to be connected providing an additional capacity of up to 256 I/O points (128 inputs and 128 outputs.)

Share Programming Devices

Either a Programming Console or the CX-Programmer (version 2.1 or later) can be used to program and monitor the CPM2C-S. Programs created on the SYSMAC-CPT or SYSMAC Support Software can also be used.

Built-in Motor Control Capability

Synchronized Pulse Control

Synchronized pulse control provides an easy way to synchronize the operation of a peripheral piece of equipment with the main equipment. The output pulse frequency can be controlled as some multiple of the input pulse frequency, allowing the speed of a peripheral piece of equipment (such as a supply conveyor) to be synchronized with the speed of the main piece of equipment.

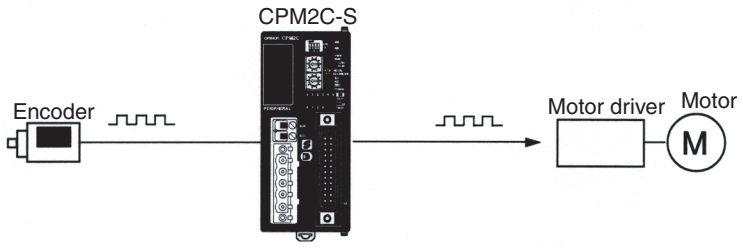

Pulses are output as a fixed multiple of the input frequency.

High-speed Counters and Interrupts

The CPM2C-S has a two kinds of high-speed counter inputs. The high-speed counter input has a response frequency of 20 kHz/5 kHz and the interrupt inputs (in counter mode) have a response frequency of 2 kHz.

- The single high-speed counter can be used in any one of the four input modes: differential phase mode (5 kHz), pulse plus direction input mode (20 kHz), up/down pulse mode (20 kHz), or increment mode (20 kHz). Interrupts can be triggered when the count matches a set value or falls within a specified range.
  One high-speed counter can be used.
- The interrupt inputs (counter mode) can be used for incrementing counters or decrementing counters (2 kHz) and trigger an interrupt (executing the interrupt program) when the count matches the target value.
  Two interrupt inputs can be used.

Easy Position Control with Pulse Outputs

CPM2C-S PCs have two outputs that can produce 10 Hz to 10 kHz pulses (single-phase outputs).

- When used as single-phase pulse outputs, there can be two outputs with a frequency range of 10 Hz to 10 kHz with a fixed duty ratio or 0.1 to 999.9 Hz with a variable duty ratio (0 to 100% duty ratio).
- When used as pulse plus direction or up/down pulse outputs, there can be just one output with a frequency range of 10 Hz to 10 kHz.

High-speed Input Capabilities for Machine Control

High-speed Interrupt Input Function

The CPU Units have 2 inputs that can be used as interrupt inputs. These inputs are shared with quick-response inputs and interrupt inputs in counter mode and have a minimum input signal width of 50 µs and response time of 0.3 ms. When an interrupt input goes ON, the main program is stopped and the interrupt program is executed.

Quick-response Input Function

The CPU Units have 2 inputs that can be used as quick-response inputs to reliably read inputs with a signal width as short as 50 µs regardless of the cycle time. These inputs are shared with interrupt inputs and interrupt inputs in counter mode.

Stabilizing Input Filter Function

The input time constant for all inputs can be set to 1 ms, 2 ms, 3 ms, 5 ms, 10 ms, 20 ms, 40 ms, or 80 ms. The effects of chattering and external noise can be reduced by increasing the input time constant.

Analog I/O Supported by Expansion Units and CompoBus/S Master Functions

Analog I/O Units

Up to 3 optional Analog I/O Units can be connected to the CPM2C-S. For each Analog I/O Unit mounted to the Unit, 2 analog input points and 1 analog output point are available. By mounting 3 Analog I/O Units, a maximum of 6 analog input points and 3 analog output points can be made available. (By using a combination of the PID(—) instruction and PWM(—) instruction, time proportional control is possible.)

- The ranges supported for analog input signals are 0 to 5 V, 0 to 10 V, –10 to 10 V, 0 to 20 mA, and 4 to 20 mA, and the resolution is 1/6000 (full scale). The averaging function and power interruption detection function can be used.
- The ranges supported for analog output signals are 1 to 5 V, 0 to 10 V, –10 to 10 V, 0 to 20 mA, and 4 to 20 mA, and the resolution is 1/6000 (full scale).

Analog I/O Terminals

Up to 8 analog inputs and 8 analog outputs can be connected through a CompoBus/S Analog I/O Terminal.

Temperature Sensor Units

Up to 3 optional Temperature Sensor Units can be mounted to the CPM2C-S. There are 2 models of Temperature Sensor Unit: One for input from a thermocouple sensor and one for input from a platinum resistance thermometer sensor. There are 2 input points on each Temperature Sensor Unit.

- Thermocouple inputs (and measurement ranges): K (–200 to 1,300°C), K (0.0 to 500.0°C), J (-100 to 850°C), and J (0.0 to 400.0°C).
- Platinum resistance thermometer inputs (and measurement ranges): Pt100 (–200.0 to 650.0°C), JPt100 (–200.0 to 650.0°C).

Other Functions

Interval Timer Interrupts

The interval timer can be set between 0.5 and 319,968 ms and can be set to generate just one interrupt (one-shot mode) or periodic interrupts (scheduled interrupt mode).

Calendar/Clock

The clock (accuracy within 1 minute/month) can be read from the program to show the current year, month, day, day of the week, and time. The clock can be set from a Programming Device (such as a Programming Console) or the time can be adjusted by rounding up or down to the nearest minute.

Long-term Timer

TIML(—) is a long-term timer that accommodates set values up to 99,990 seconds (27 hours, 46 minutes, 30 seconds). When combined with the SECONDS TO HOURS conversion instruction (HMS(—)), the long-term timer provides an easy way to control equipment scheduling.

Expansion Memory Unit

The CPM1-EMU01-V1 Expansion Memory Unit is a program loader for small-size or micro PCs. Using the CPM1-EMU01-V1, simple on-site transfer of user programs and data memory (DM 6144 to DM 6655) is possible with PCs.

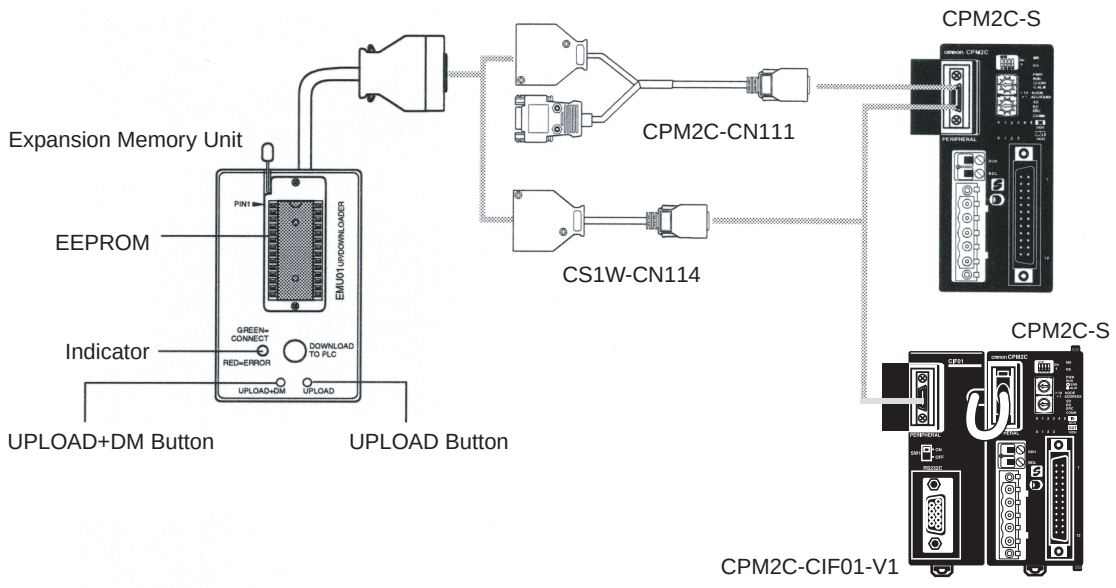

Complete Communications Capabilities

Host Link

A Host Link connection can be made through the PC's communications port used as a RS-232C or peripheral port. A personal computer or Programmable Terminal connected in Host Link mode can be used for operations such as reading/writing data in the PC's I/O memory or reading/changing the PC's operating mode.

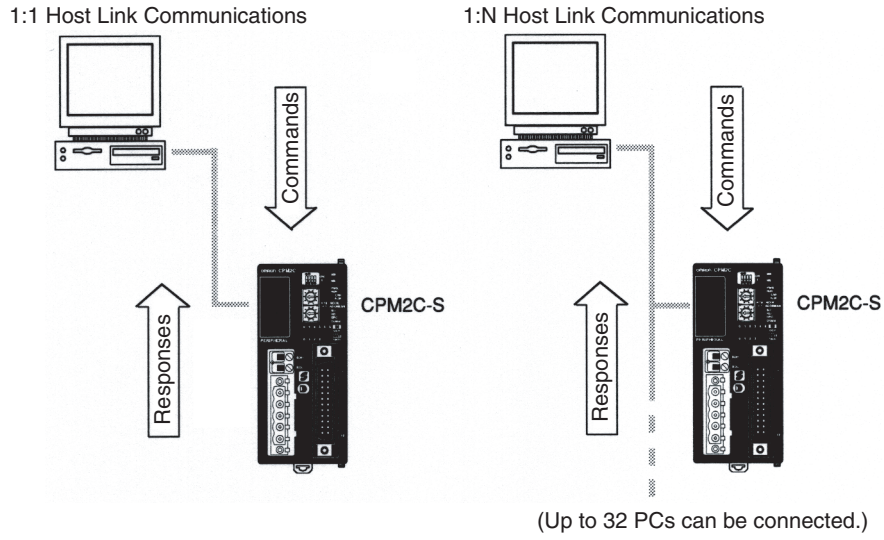

No-protocol Communications

The TXD(48) and RXD(47) instructions can be used in no-protocol mode to exchange data with standard serial devices. For example, data can be received from a bar code reader or transmitted to a serial printer. The serial devices can be connected to the communications port as a RS-232C or peripheral port.

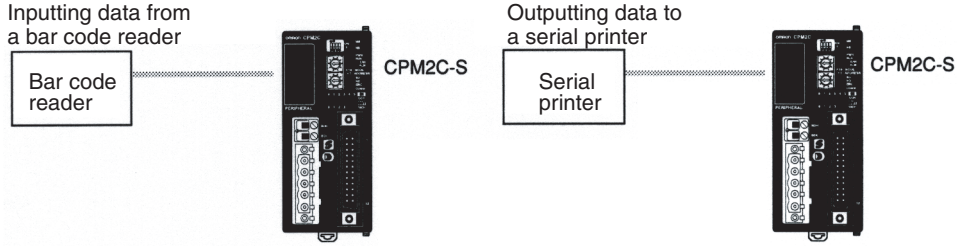

High-speed 1:1 NT Link Communications

In a 1:1 NT Link, an OMRON Programmable Terminal (PT) can be connected directly to the CPM2C-S. The PT must be connected to the communications port as an RS-232C port (not as a peripheral port).

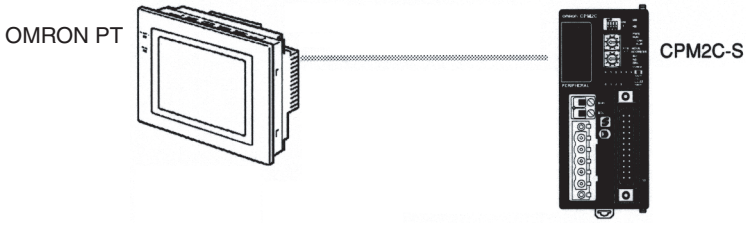

One-to-one PC Link

A CPM2C-S can be linked directly to another CPM2C-S, CQM1, CPM1, CPM1A, CPM2A, CPM2C, SRM1(-V2), C200HS, or C200HX/HG/HE PC. The 1:1 PC Link allows automatic data link connections. The PC must be connected to the communications port as an RS-232C port (not as a peripheral port).

1-1-2 Overview of CPM2C-S Functions

Main function	Variations/Details	
CompoBus/S Master functions	• Remote I/O devices can be allocated up to 256 I/O points (128 inputs and 128 outputs) in input area IR 020 to IR 027 and output area IR 030 to IR 037. • The node numbers can be set to 0 to 7 (128-point mode) or 0 to 15 (256-point mode). • The communications mode can be set to high-speed mode (max. length 100 m) or long-distance mode (max. length 500 m).	
DeviceNet Slave functions	• Up to 64 words (32 input words and 32 output words) can be allocated to the DeviceNet Master's I/O. The Master's I/O can be allocated to the following data areas. IR 000 to IR 049 IR 200 to IR 227 DM 0000 to DM 2047 LR 00 to LR 15 HR 00 to HR 19 AR 00 to AR 23 (CPM2C → Master; read-only) TC 000 to TC 255 • Explicit message communications are supported. Any CPM2C-S data area can be accessed from the DeviceNet Master. • The communications speed can be set to 500 kbps (total network length 100 m max.), 250 kbps (total network length 250 m max.), or 125 kbps (total network length 500 m max.).	
Interrupts	Interrupt inputs 2 inputs Response time: 50 µs	
	Interval timer interrupts 1 input Set value: 0.5 to 319,968 ms Precision: 0.1 ms	Scheduled interrupts One-shot interrupt
High-speed counters	High-speed counter 1 input, see note 1. Differential phase mode (5 kHz) Pulse plus direction input mode (20 kHz) Up/down input mode (20 kHz) Increment mode (20 kHz)	No interrupt Count-check interrupt (An interrupt can be generated when the count equals the set value or the count lies within a preset range.)
	Interrupt inputs (counter mode) 2 inputs Incrementing counter (2 kHz) Decrementing counter (2 kHz)	No interrupt Count-up interrupt

Main function	Variations/Details
Pulse outputs	• 2 outputs: Single-phase pulse output without acceleration/deceleration (See note 2.) 10 Hz to 10 kHz • 2 outputs: Variable duty ratio pulse output (See note 2.) 0.1 to 999.9 Hz, duty ratio 0 to 100% • 1 output: Pulse output with trapezoidal acceleration/deceleration (See note 2.) Pulse plus direction output, up/down pulse output, 10 Hz to 10 kHz
Synchronized pulse control	1 point, see notes 1 and 2. Input frequency range: 10 to 500 Hz, 20 Hz to 1 kHz, or 300 Hz to 20 kHz Output frequency range: 10 Hz to 10 kHz
Quick-response input	2 inputs in CPU Units with 10 I/O points, 4 inputs in CPU Units with 20 I/O points Minimum input signal width: 50 μs
Input time constant	Determines the input time constant for all inputs. (Settings: 1, 2, 3, 5, 10, 20, 40, or 80 ms)
Calendar/Clock	Shows the current year, month, day of the week, day of the month, hour, minute, and second.
Expansion Unit functions	Analog I/O functions using CPM2C-MAD11 Analog I/O Unit • Two analog inputs: Input range of 0 to 5 V, 1 to 5 V, 0 to 10 V, –10 to 10 V, 0 to 20 mA, or 4 to 20 mA • One analog output: Output range of 1 to 5 V, 0 to 10 V, –10 to 10 V, 0 to 20 mA, or 4 to 20 mA
	Temperature sensing functions using CPM2C-TS001/101 Temperature Sensor Unit • Thermocouple input (measurement range): K (–200 to 1,300°C) K (0.0 to 500.0°C) J (–100 to 850°C) J (0.0 to 400.0°C) • Platinum resistance thermometer (measurement range): Pt100 (–200.0 to 650.0°C) JPt100 (–200.0 to 650.0°C)
	CompoBus/S Slave functions using CPM2C-SRT21 CompoBus/S I/O Link Unit Data exchange with the Master Unit via 8 inputs and 8 outputs.

Note 1. This input is shared by the high-speed counter and synchronized pulse control functions.

2. This output is shared by the pulse output and synchronized pulse control functions.

1-2 System Configurations

1-2-1 CPU Units and AC Power Supply Units

CPM2C-S CPU Units

CPM2C-S100C
CPM2C-S110C

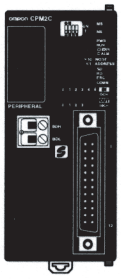

CPM2C-S100C-DRT
CPM2C-S110C-DRT

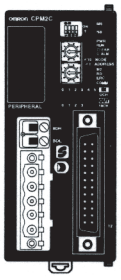

Name	Inputs	Outputs	Model
CPU Unit with CompoBus/S Master Functions	6 24-VDC inputs	4 sinking transistor outputs	CPM2C-S100C
		4 sourcing transistor outputs	CPM2C-S110C
CPU Unit with CompoBus/S Master and DeviceNet Slave Functions		4 sinking transistor outputs	CPM2C-S100C-DRT
		4 sourcing transistor outputs	CPM2C-S110C-DRT

AC Power Supply Unit (Optional)

AC Power Supply Unit

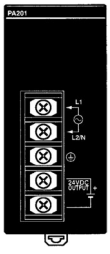

Name	Ratings	Model
AC Power Supply Unit	100 to 240 VAC input 24 VDC, 600 mA output	CPM2C-PA201

Note General-purpose power supplies such as the S82J-series and S82K-series Power Supplies can also be used.

1-2-2 CompoBus/S Interface

The standard built-in CompoBus/S interface increases the PC's I/O capacity, reduces wiring, and saves space. Up to 32 CompoBus/S Slaves can be connected to create a Remote I/O Link with up to 256 I/O points. It is easy to build an efficient, long-range distributed system with less wiring by connecting CompoBus/S I/O Terminals, Analog Terminals, Sensor Terminals, and Bit Chain Terminals.

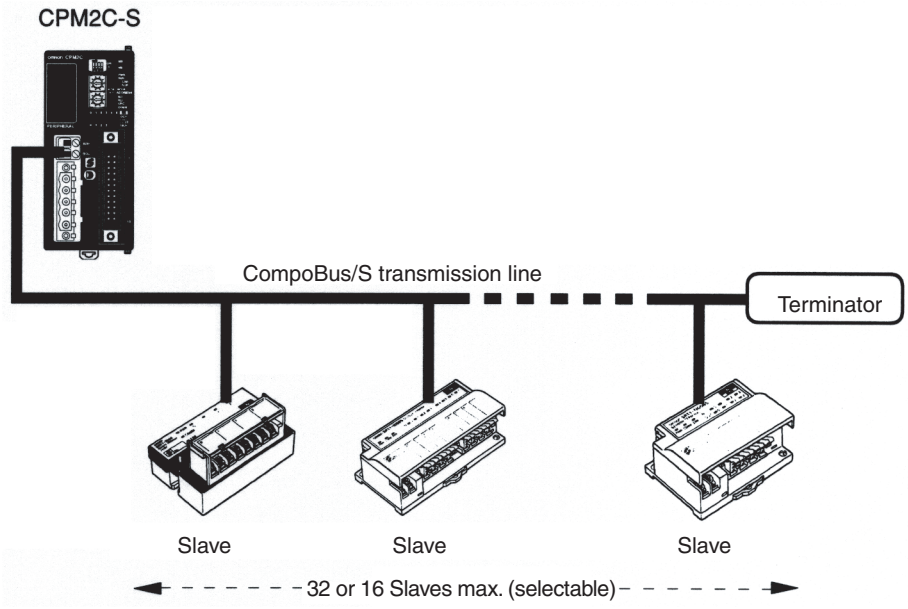

- The max. number of Slaves that can be connected through CompoBus/S can be set to 16 or 32 Slaves. The following tables show how the max. number of Slaves and communications mode settings affect the communications response time as well as the communications distance and communications speed.

CompoBus/S Communications Response Time

Communications mode	Max. number of Slaves	Communications response time
High-speed mode	16	0.5 ms
	32	0.8 ms
Long-distance mode	16	4.0 ms
	32	6.0 ms

Communications Distance

Cable	Mode	Main line length	Branch line length	Total branch line length
2-conductor VCTF cable	High-speed Communications Mode	100 m max.	3 m max.	50 m max.
	Long-distance Communications Mode	500 m max.	6 m max.	120 m max.
4-conductor VCTF cable	High-speed Communications Mode	30 m max. (See note.)	3 m max. (See note.)	30 m max. (See note.)
	Long-distance Communications Mode	Flexibly branched, provided that the total length of cable is a maximum of 200 m.		

Cable	Mode	Main line length	Branch line length	Total branch line length
Special Flat Cable	High-speed Communications Mode	30 m max. (See note.)	3 m max. (See note.)	30 m max. (See note.)
	Long-distance Communications Mode	Flexibly branched, provided that the total length of cable is a maximum of 200 m.		

Note When 4-conductor VCTF cable or Special Flat Cable is used to connect fewer than 16 Slaves, the main line can be up to 100 m long and the total branch line length can be up to 50 m in High-speed Communications Mode. (These are the same conditions as when 2-conductor VCTF cable is used.)

- Refer to *5-2 Remote I/O Communications* for a list of compatible Slaves.

1-2-3 CPU Unit, Expansion Units, and Expansion I/O Units

A series of up to 3 Expansion I/O Units or Expansion Units can be connected to the expansion I/O connector on the CPU Unit.

There are three types of Expansion Units available: Analog I/O Unit, Temperature Sensor Unit, and CompoBus/S I/O Link Unit.

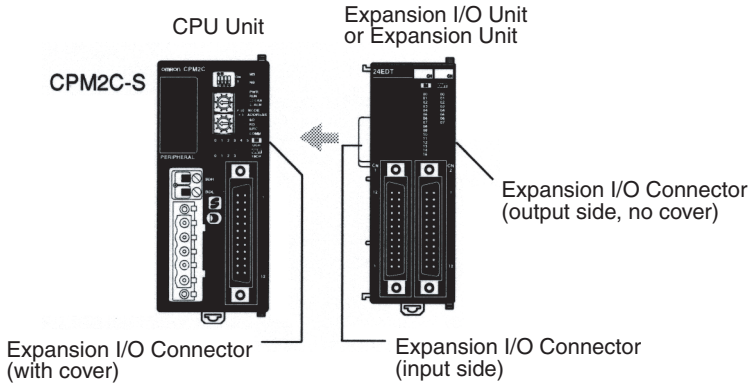

A PC with 106 I/O points (the maximum) can be assembled by connecting three 32-point Expansion I/O Units to a CPU Unit.

CPM2C-S100C-DRT (6 inputs, 4 outputs)	1 Unit	CPM2C-32EDTC (16 inputs, 16 outputs)	3 Units	54 inputs, 52 outputs

Expansion I/O Units

Units with Relay Outputs (via Terminal Block)

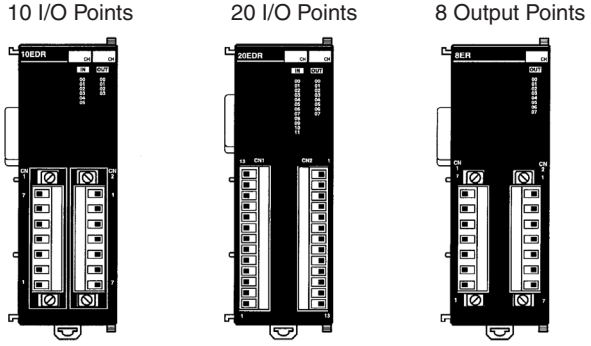

Unit I/O	Inputs	Outputs	Model
10 I/O points	6 inputs (24 VDC)	4 relay outputs	CPM2C-10EDR
20 I/O points	12 inputs (24 VDC)	8 relay outputs	CPM2C-20EDR
8 output points	---	8 relay outputs	CPM2C-8ER

Units with Transistor Outputs via Fujitsu-compatible Connector

24 I/O Points

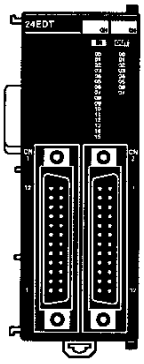

32 I/O Points

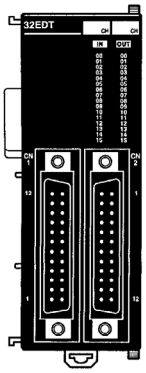

8 Input Points

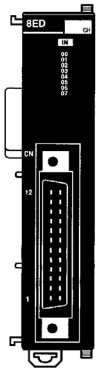

8 Output Points

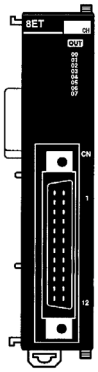

16 Input Points

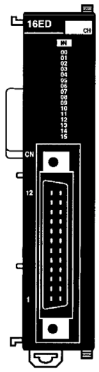

16 Output Points

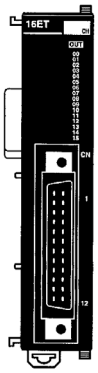

Unit I/O	Inputs	Outputs	Model
24 I/O points	16 inputs (24 VDC)	8 transistor outputs (sinking)	CPM2C-24EDTC
		8 transistor outputs (sourcing)	CPM2C-24EDT1C
32 I/O points	16 inputs (24 VDC)	16 transistor outputs (sinking)	CPM2C-32EDTC
		16 transistor outputs (sourcing)	CPM2C-32EDT1C
8 input points	8 inputs (24 VDC)	---	CPM2C-8EDC
16 input points	16 inputs (24 VDC)	---	CPM2C-16EDC
8 output points	---	8 transistor outputs (sinking)	CPM2C-8ETC
	---	8 transistor outputs (sourcing)	CPM2C-8ET1C
16 output points	---	16 transistor outputs (sinking)	CPM2C-16ETC
	---	16 transistor outputs (sourcing)	CPM2C-16ET1C

Units with Transistor Outputs via MIL Connector

24 I/O Points

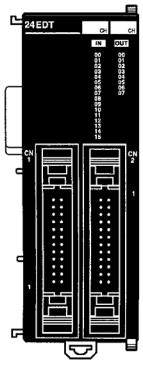

32 I/O Points

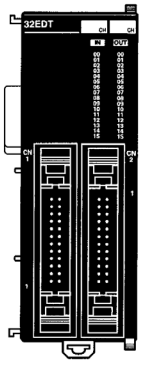

8 Input or
8 Output Points

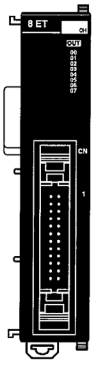

16 Input or
16 Output Points

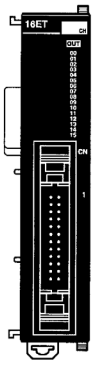

Unit I/O	Inputs	Outputs	Model
24 I/O points	16 inputs (24 VDC)	8 transistor outputs (sinking)	CPM2C-24EDTM
		8 transistor outputs (sourcing)	CPM2C-24EDT1M
32 I/O points	16 inputs (24 VDC)	16 transistor outputs (sinking)	CPM2C-32EDTM
		16 transistor outputs (sourcing)	CPM2C-32EDT1M
8 input points	8 inputs (24 VDC)	---	CPM2C-8EDM
16 input points	16 inputs (24 VDC)	---	CPM2C-16EDM
8 output points	---	8 transistor outputs (sinking)	CPM2C-8ETM
	---	8 transistor outputs (sourcing)	CPM2C-8ET1M
16 output points	---	16 transistor outputs (sinking)	CPM2C-16ETM
	---	16 transistor outputs (sourcing)	CPM2C-16ET1M

Expansion Units

CPM2C-MAD11
Analog I/O Unit

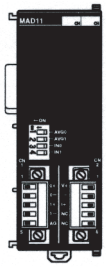

CPM2C-TS001/101
Temperature Sensor Unit

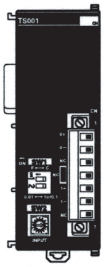

CPM2C-SRT21
CompoBus/S I/O Link Unit

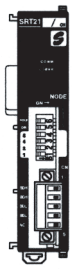

Unit		Max. number of Units	Inputs	Outputs	Model
Analog I/O Unit	2 analog inputs 1 analog output	4	2 points, 2 words allocated	1 point, 1 word allocated	CPM2C-MAD11
Temperature Sensor Unit	2 thermocouple inputs	4	2 points, 2 words allocated	---	CPM2C-TS001
	2 platinum resistance thermometer inputs		2 points, 2 words allocated	---	CPM2C-TS101
CompoBus/S I/O Link Unit	8 input points and 8 output points for the built-in outputs and inputs of the Master Unit	5	8 points, 1 word allocated (Inputs from the Master)	8 points, 1 word allocated (Outputs to the Master)	CPM2C-SRT21

1-2-4 DeviceNet Interface

A CPM2C-S100C-DRT or CPM2C-S110C-DRT can be used as a DeviceNet Slaves to create an I/O Link of up to 1,024 points (512 inputs and 512 outputs) with the DeviceNet Master. The input and output areas used in the I/O Link can be allocated independently and the data areas, starting addresses, and size of these Read/Write areas can be specified freely. (The Read/Write areas can be set in the PC Setup or using the DeviceNet Configurator.)

Explicit message communications can be initiated from the Master to read or write data in any data area in the CPM2C-S.

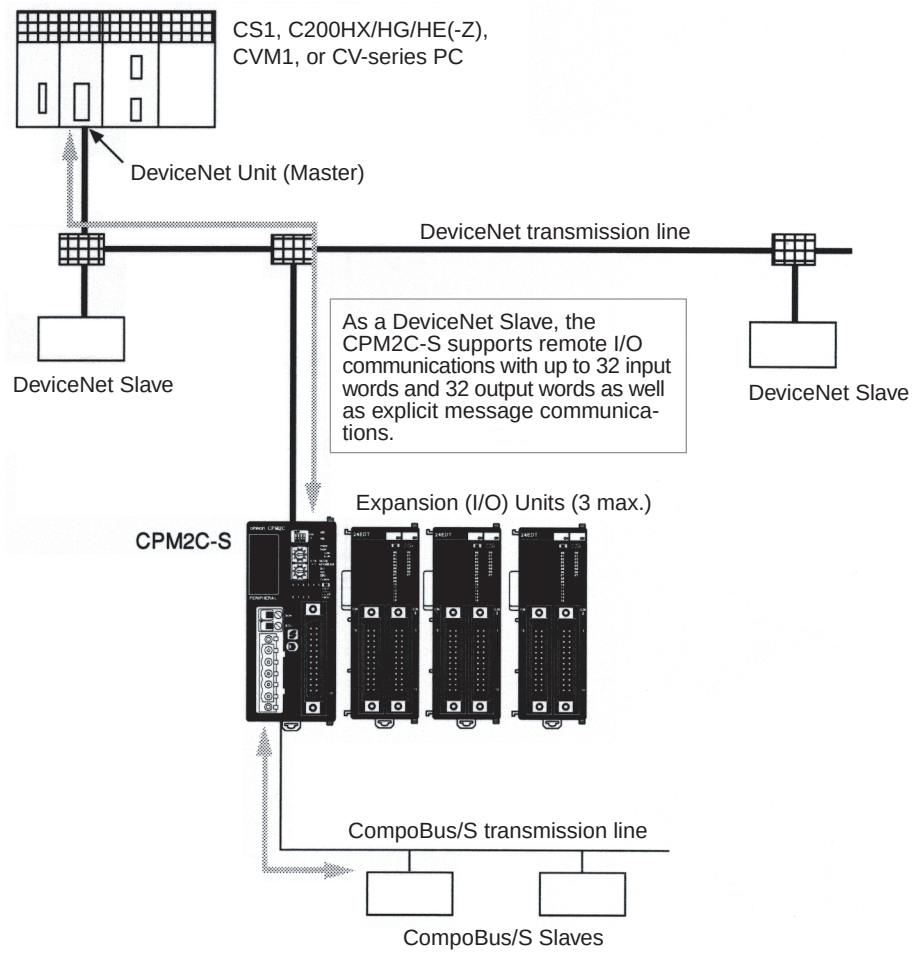

Note Refer to the *DeviceNet Masters Operation Manual* (W379) for more details on OMRON DeviceNet Masters.

1-2-5 Adapter Units

Peripheral/RS-232C Adapter Unit

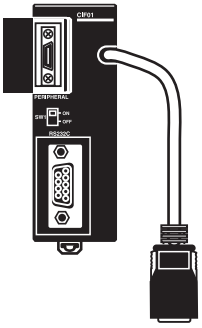

RS-422/RS-232C Adapter Unit

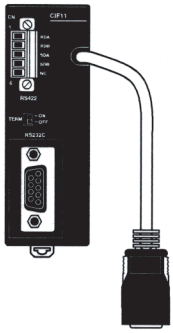

Unit	Conversion	Model
Peripheral/RS-232C Adapter Unit	CPU Unit's communications port → Peripheral port + RS-232C port	CPM2C-CIF01-V1
RS-422/RS-232C Adapter Unit	CPU Unit's communications port → RS422 port + RS-232C port	CPM2C-CIF11

Note

1. The CPM2C-CIF01-V1 cannot be used with any PC model other than a CPM2C or CPM2C-S.
2. Although a CPM2C-CN111 can be connected to a CPM2C-CIF01-V1, it is not possible to use the peripheral port and the RS-232C port on the CPM2C-CN111 simultaneously. If an attempt is made to use both ports simultaneously, it may be impossible to communicate normally and equipment malfunction may result.

1-3 CPM2C-S Structure and Operation

1-3-1 CPM2C-S Structure

The following diagram shows the internal structure of the CPU Unit.

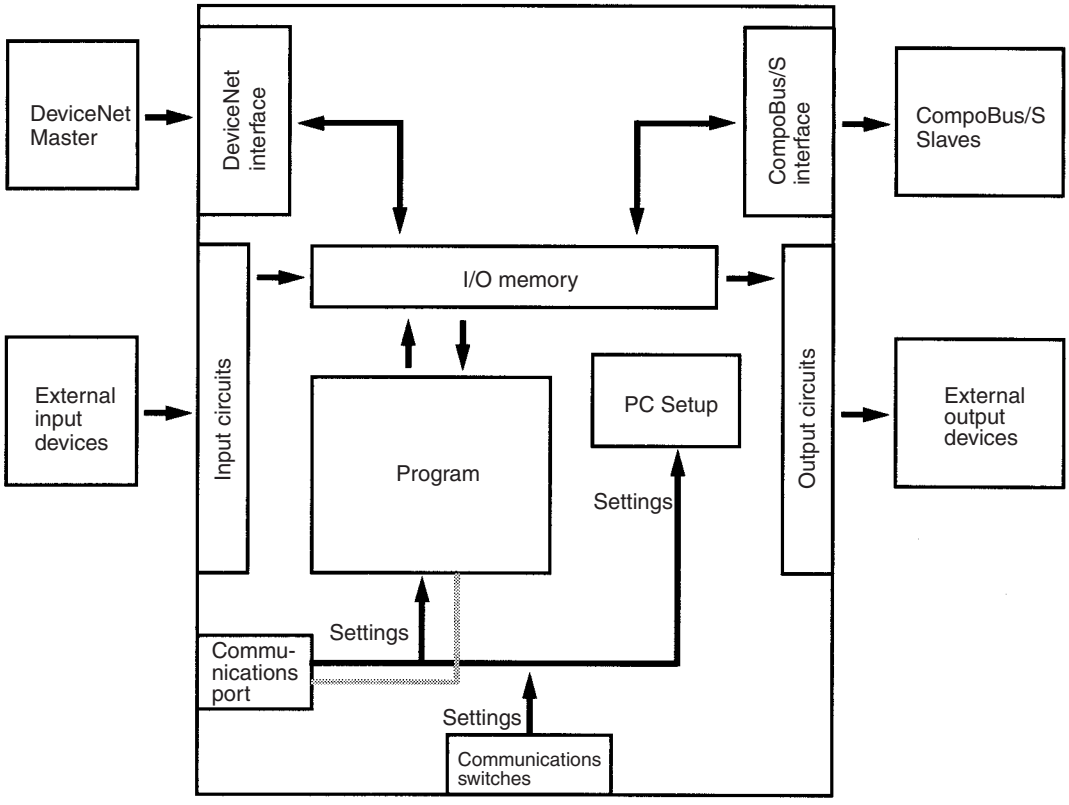

I/O Memory

The program reads and writes data in this memory area during execution. Part of the I/O memory contains the bits that reflect the status of the PC's inputs and outputs. Parts of the I/O memory are cleared when the power is turned ON and other parts are retained.

Note Refer to *SECTION 4 Memory Areas* for more details on I/O memory.

Program

This is the program written by the user. The CPM2C-S executes the program cyclically. (Refer to *1-3-5 Cyclic Operation and Interrupts* for details.)

The program can be divided broadly into two parts: the "main program" that is executed cyclically and the "interrupt programs" that are executed only when the corresponding interrupt is generated.

PC Setup

The PC Setup contains various startup and operating parameters. The PC Setup parameters can be changed from a Programming Device only; they cannot be changed from the program.

Some parameters are accessed only when PC's power supply is turned ON and others are accessed regularly while the power is ON. It will be necessary to turn the power OFF and then ON again to enable a new setting if the parameter is accessed only when the power is turned ON.

Note Refer to *4-6 PC Setup* for details on the PC Setup.

Communications Switches

The Communications Switches determine whether the peripheral port and RS-232C port connected through the communications port operate with the

standard communications settings or the communications settings in the PC Setup.

1-3-2 Operating Modes

CPM2C-S CPU Units have 3 operating modes: PROGRAM, MONITOR, and RUN.

PROGRAM Mode

The program cannot be executed in PROGRAM mode. This mode is used to perform the following operations in preparation for program execution.

- Changing initial/operating parameters such as those in the PC Setup
- Writing, transferring, or checking the program
- Checking wiring by force-setting and force-resetting I/O bits

⚠ **Caution** The PC continues to refresh I/O bits even if the PC is in PROGRAM mode, so devices connected to output points may operate unexpectedly if the corresponding output bit is turned ON by transferring I/O memory or force-setting output bits from a Programming Device.
When output bits are allocated to the DeviceNet I/O Link Write Area, data written to the output bits through DeviceNet is effective immediately and the output bits may go ON even if the PC is in PROGRAM mode. Do not change the status of output bits from a Programming Device or DeviceNet unless it is safe to do so.

MONITOR Mode

The program is executed in MONITOR mode and the following operations can be performed from a Programming Device. In general, MONITOR mode is used to debug the program, test operation, and make adjustments.

- Online editing
- Monitoring I/O memory during operation
- Force-setting/force-resetting I/O bits, changing set values, and changing present values during operation

RUN Mode

The program is executed at normal speed in RUN mode. Operations such as online editing, force-setting/force-resetting I/O bits, and changing set values/present values cannot be performed in RUN mode, but the status of I/O bits can be monitored.

1-3-3 Operating Mode at Startup

The operating mode of the CPM2C-S when the power is turned ON depends upon the setting of pin 4 on the DIP switch on the front of the CPM2C-S, the PC Setup settings in DM 6600, and the Programming Console's mode switch setting if a Programming Console is connected.

PC Setup setting			Operating mode
Word	**Bits**	**Setting**	
DM 6600	08 to 15	00 (Hex)	See note 1.
		01 (Hex)	Startup mode is the same as the operating mode before power was interrupted.
		02 (Hex)	Startup mode is determined by bits 00 to 07.
	00 to 07	00 (Hex)	PROGRAM mode
		01 (Hex)	MONITOR mode
		02 (Hex)	RUN mode

Note

1. The operating mode at startup depends upon the setting of DIP switch pin 4 and the Programming Device connected to the communications port (peripheral port).

Programming Device	Pin 4 OFF	Pin 4 ON
None	PROGRAM mode	RUN mode
Programming Console	Operating mode set on the Programming Console's mode switch	
Other device	PROGRAM mode	

   The default setting for bits 08 to 15 of DM 6600 is 00. If this default setting is used and pin 4 is OFF, the CPM2C-S will automatically start operating in RUN mode when the power is turned ON.

2. If pin 4 is OFF and only an RS-232C cable is connected to the communications port (i.e., there is no peripheral port connection), the CPM2C-S will automatically start operating in RUN mode when the power is turned ON.

   Example Cable Connections:
   CS1W-CN118 and XW2Z-200S/500S
   CS1W-CN118 and XW2Z-200S-V/500S-V
   CPM2C-CN111 and XW2Z-200S/500S (no peripheral port connection)
   CPM2C-CN111 and XW2Z-200S-V/500S-V (no peripheral port connection)

1-3-4 PC Operation at Startup

Time Required for Initialization

The time required for startup initialization depends on several factors, such as the operating conditions (including power supply voltage, system configuration, and ambient temperature) and the program contents.

Power OFF Operation

Minimum Power Supply Voltage

The PC will stop and all outputs will be turned OFF if the power supply voltage falls below 85% of the rated value.

Momentary Power Interruption

A power interruption will not be detected and CPU Unit operation will continue if the power interruption lasts less than 2 ms.

A power interruption may or may not be detected for power interruptions somewhat longer than 2 ms.

When a power interruption is detected, the CPU Unit will stop operating and all outputs will be turned OFF.

Automatic Reset

Operation will restart automatically when the power supply voltage is restored to more than 85% of the rated voltage.

Timing Chart of Power OFF Operation

The power interruption detection time is the time required for a power interruption to be detected after the power supply voltage drops below 85% of the rated value.

1,2,3...

1. Minimum power interruption detection time
   Power interruptions that are shorter than 2 ms will not be detected.

2. Undetermined additional time
   Power interruptions only slightly longer than the minimum power interruption time may not be detected.

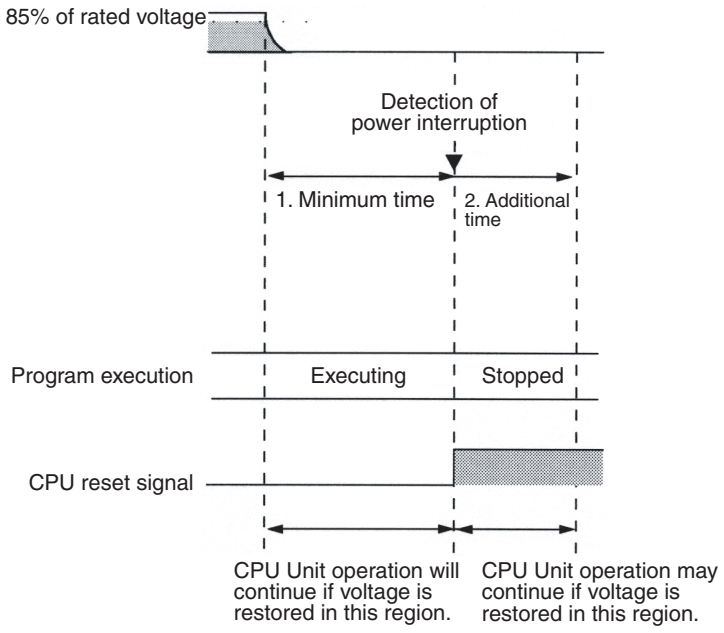

Note If the power supply voltage fluctuates around 85% of the PC's rated voltage, PC operation may stop and restart repeatedly. When repeated stopping and starting will cause problems with the controlled system, set up a protective circuit such as a circuit that shuts OFF the power supply to sensitive equipment until the power supply voltage returns to the rated value.

1-3-5 Cyclic Operation and Interrupts

Basic CPU Operation

Initialization processing is performed when the power is turned ON. If there are no initialization errors, the overseeing processes, program execution, I/O refreshing, and communications port servicing are performed repeatedly (cyclically).

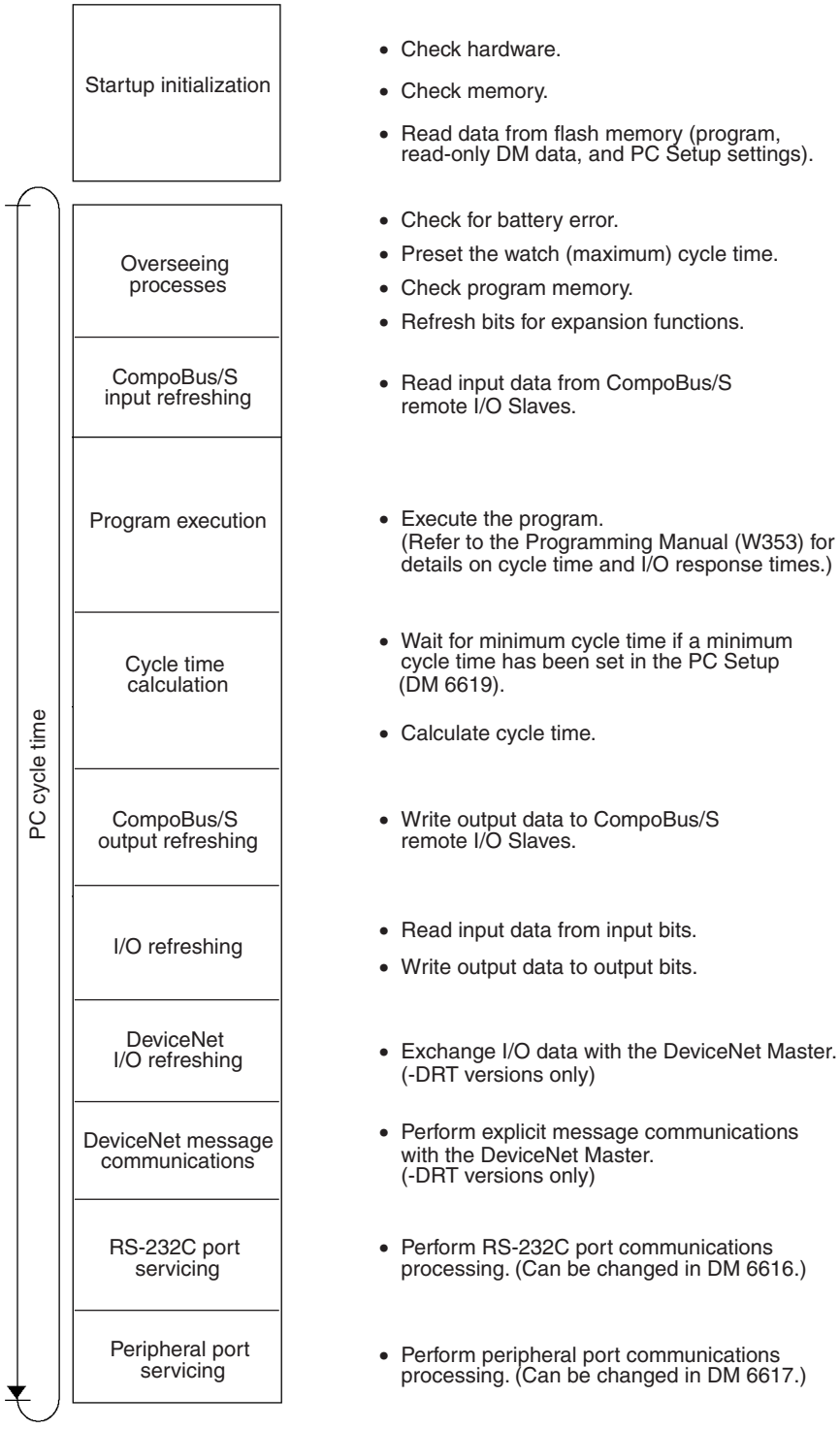

The cycle time can be read from a Programming Device.

AR 14 contains the maximum cycle time and AR 15 contains the present cycle time in multiples of 0.1 ms.

The cycle time will vary slightly depending on the processing being performed in each cycle, so the calculated cycle time will not always match the actual cycle time.

Program Execution in Cyclic Operation

The following diagram shows the cyclic operation of the CPM2C-S when the program is being executed normally.

Normally, the results of program execution are transferred to I/O memory just after program execution (during I/O refreshing), but IORF(97) can be used to refresh a specified range of I/O words during program execution. The specified range of I/O words will be refreshed when IORF(97) is executed.

The cycle time is the sum of the time required for program execution, I/O refreshing, and communications port servicing.

A minimum cycle time (1 to 9,999 ms) can be set in the PC Setup (DM 6619). When a minimum cycle time has been set, CPU operation is paused after program execution until the minimum cycle time is reached. CPU operation will not be paused if the actual cycle time is longer than the minimum cycle time set in DM 6619.

Note A fatal error will occur and PC operation will stop if a maximum cycle time has been set in the PC Setup (DM 6618) and the actual cycle time exceeds that setting.

The default settings for RS-232C and peripheral port servicing are 5% each of the cycle time, but these settings can be changed (between 0% and 99%) in the PC Setup. The RS-232C port's setting is in DM 6616 and the peripheral port's setting is in DM 6617.

Refer to *SECTION 7 Cycle Time and I/O Response Time* for more details and precautions on the cycle time.

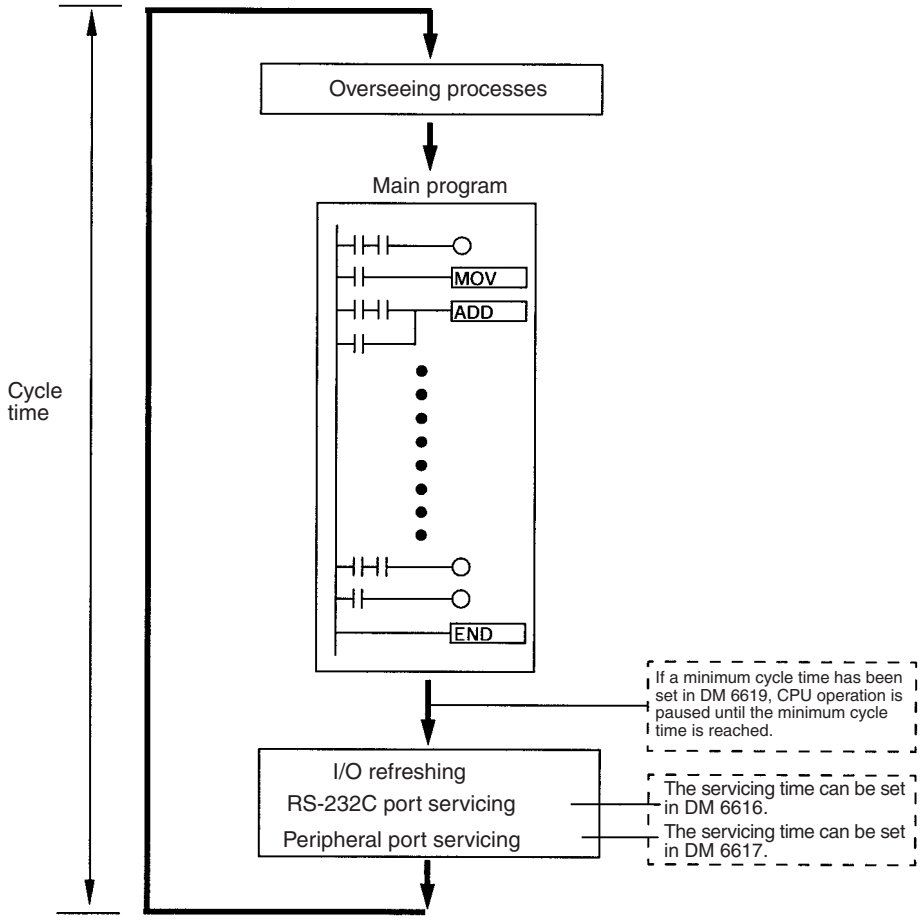

Interrupt Program Execution

When an interrupt is generated during execution of the main program, main program execution is interrupted immediately and the interrupt program is executed. The following diagram shows the cyclic operation of the CPM2C-S when an interrupt program is executed.

Normally, the results of interrupt program execution are transferred to I/O memory just after program execution (during I/O refreshing), but IORF(97) can be used to refresh a specified range of I/O words during execution of the interrupt program. The specified range of I/O words will be refreshed when IORF(97) is executed.

The normal cycle time is extended by the time required for execution of the interrupt program.

Refer to *SECTION 7 Cycle Time and I/O Response Time* for more details and precautions on the cycle time.

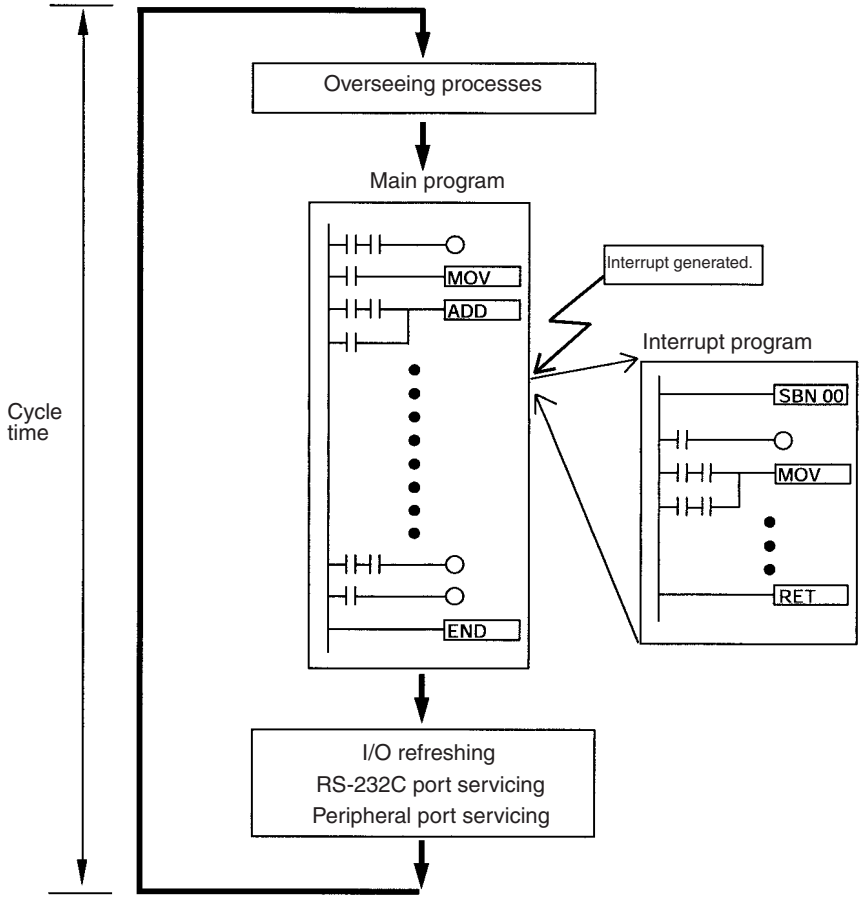

⚠ **Caution** Although IORF(97) can be used in interrupt subroutines, you must be careful of the interval between IORF(97) executions. If IORF(97) is executed too frequently, a fatal system error may occur (FALS 9F), stopping operation. The interval between executions of IORF(97) should be at least 1.3 ms + total execution time of the interrupt subroutine.

Immediate Refreshing

IORF(97) can be executed in the program to refresh a specified range of I/O words. The specified I/O words will be refreshed when IORF(97) is executed.

IORF(97) can be used to refresh I/O from the main program or the interrupt program.

When IORF(97) is used, the cycle time is extended by the time required to refresh the specified I/O words.

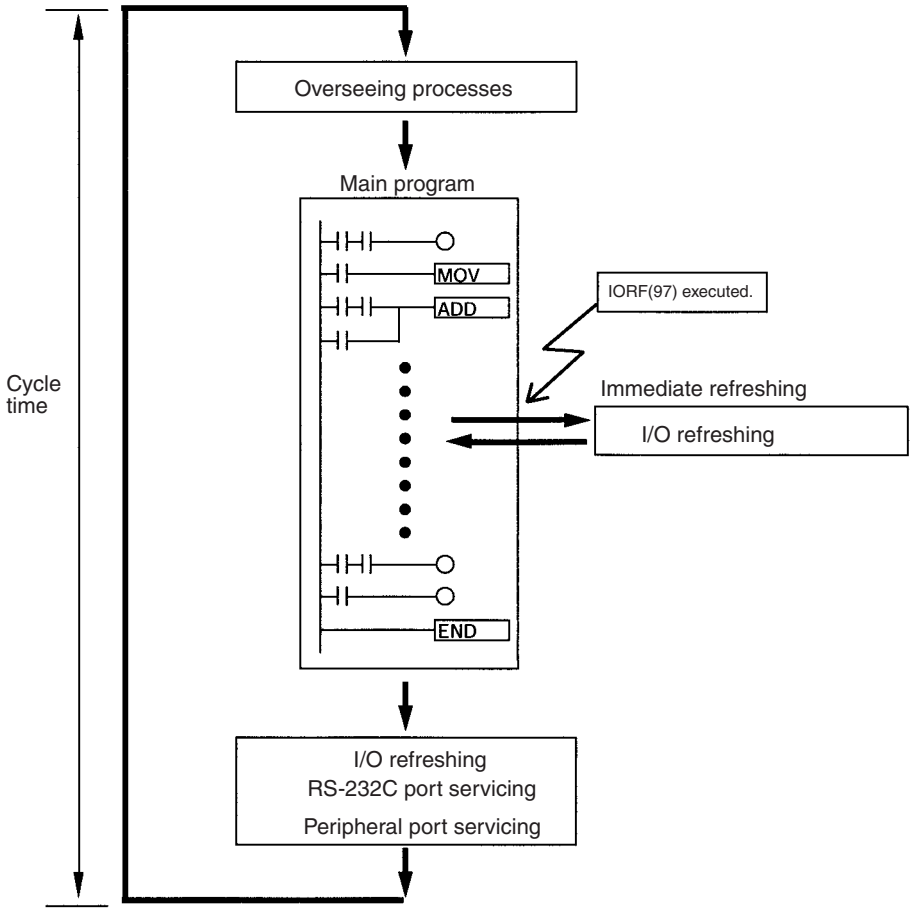

1-4 Functions Listed by Usage

Machine Control Functions

Usage		Function	Refer to
Reduce wiring, save space, and minimize PC load by controlling equipment with a few low-capacity PCs dispersed near each piece of equipment rather than a single centralized PC.		Distributed control using DeviceNet	Page 117
Use remote I/O to save resources and space.		Use CompoBus/S Remote Terminals.	Page 111
Receive high-speed count inputs (For example, calculating length or position with an encoder).	Max. count frequency of 2 kHz (single-phase)	Use interrupt input (counter mode) to read the present value without interrupts.	W353
	Max. count frequency of 5 kHz (differential phase) or 20 kHz (single-phase)	Use high-speed counter to read the present value without interrupts.	
Generate a pulse output based on a multiple of an input pulse to synchronize control of a peripheral process with the main process.		Pulse synchronization	
The multiple for the peripheral process (such as tool feed rate) can be changed during operation by calculating the multiple from another input value (such as an encoder) in the peripheral process. This method can be used to change the process for different products or models without stopping the equipment.			
Reliably receive input pulses with an ON-time shorter than the cycle time (such as inputs from a photomicrosensor).		Quick-response input function	
Interrupt functions	Execute a special process very quickly when an input goes ON. (For example, operating a cutter when an interrupt input is received from a Proximity Switch or Photoelectric Switch.)	Interrupt input (interrupt input mode)	W353
	Count input ON pulses and execute a special process very quickly when the count reaches the preset value. (For example, stopping the supply feed when a preset number of workpieces have passed through the system.)	Interrupt input (counter mode)	
	Execute a special process at a preset count value. (For example, cutting material very precisely at a given length.)	High-speed counter interrupt generated when the count matches the set value.	
	Execute a special process when the count is within a preset range. (For example, sorting material very quickly when it is within a given length range.)	High-speed counter interrupt generated when the count is within the set range.	
	Execute a special process when a timer times out. (For example, stopping a conveyor at very precise time (independent of the cycle time) after the workpiece is detected.)	Interval timer interrupt (One-shot mode)	
	Repeat a special process at regular intervals. (For example, the speed of a sheet feeder can be monitored by measuring the input signal from an encoder at regular intervals and calculating the speed.)	Interval timer interrupt (Scheduled interrupt mode)	
Perform simple positioning by outputting pulses to a motor driver that accepts pulse-train inputs.		Pulse output function	
Receive an analog input and output an analog output.		Analog I/O Unit (Connect the Analog I/O Unit to the CPU Unit.)	
Receive temperature sensor input directly at the PC.		Temperature Sensor Unit (Connect the Temperature Sensor Unit to the CPU Unit.)	

Basic Functions

Usage	Function	Refer to
Set the cycle time to a fixed interval.	Set a minimum (fixed) cycle time in the PC Setup.	Page 101
Stop PC operation when the cycle time exceeds a maximum setting.	Set a maximum (watch) cycle time in the PC Setup.	
Keep all outputs ON when PC operation stops.	Turn ON the IOM Hold Bit (SR 25212).	Page 93
Retain the contents of I/O memory when starting operation.	Turn ON the IOM Hold Bit (SR 25212).	
Retain the contents of I/O memory when the PC is turned ON.	Turn ON the IOM Hold Bit (SR 25212) and set the PC Setup (DM 6601) so that the status of the IOM Hold Bit is maintained at startup.	Page 93, 100
Eliminate effects from chattering and external noise.	Set a longer input time constant in the PC Setup.	Page 102

Maintenance Functions

Usage	Function	Refer to
Record data with time-stamp.	Clock/calendar function	Page 98
Establish user-defined errors for desired input conditions. (Fatal and non-fatal errors can be defined.)	FAL(06) defines non-fatal errors. (PC operation continues.) FALS(07) defines fatal errors. (PC operation stops.)	W353
Read the number of power interruptions.	The number of power interruptions is stored in AR 23.	
Set the startup operating mode.	Set the startup operating mode in the PC Setup (DM 6600).	Page 100

Communications Functions

Usage	Function	Refer to
Read/write I/O memory data and change the operating mode from a host computer.	Host Link communications (Set the communications mode to Host Link in the PC Setup.)	W353
Connect to a serial device such as a bar code reader or serial printer.	No-protocol communications (Set the communications mode to no-protocol in the PC Setup.)	
Make a high-speed connection with an OMRON Programmable Terminal.	1:1 NT Link (Set the communications mode to 1:1 NT Link in the PC Setup.)	
Make a PC-PC data link connection with another CPM2C, or a CPM1, CPM1A, CPM2A, SRM1, CQM1, C200HS, or C200HX/HG/HE PC.	1:1 PC Link (Set the communications mode to 1:1 PC Link in the PC Setup.)	
Connect a Programming Console.	Connect the Programming Console to the peripheral port via the communications port. (Turn OFF Communications Switch 2.)	Page 160
Connect a personal computer running SYSMAC Support Software (SSS) or SYSMAC-CPT Support Software.	The computer can be connected to the peripheral port or RS-232C port via the communications port.	Page 78, 159
Monitor equipment with a Programmable Terminal and program the PC with a Programming Device.	The RS-232C port and peripheral port can be used simultaneously via the communications port.	W353 Page 81, 160

1-5 Comparison with the CPM2C

Item			CPM2C-S	CPM2C
Instruction set	Basic instructions		14	14
	Special instructions		105 instructions, 185 variations	105 instructions, 185 variations
Instruction execution times	Basic instructions		LD: 0.64 µs	LD: 0.64 µs
	Special instructions		MOV(21): 7.8 µs	MOV(21): 7.8 µs
Program capacity			4,096 words	4,096 words
Maximum number of I/O points	Stand-alone CPU Unit		10 points	10, 20, or 32 points
	CPU Unit with Expansion I/O Units		362 points max.	170, 180, or 192 points max.
Expansion Units and Expansion I/O Units	Maximum number of Units		A maximum of 3 Units.	A maximum of 5 Units can be connected to any of the CPU Units.
	Available models		Expansion I/O Units, Analog I/O Unit, Temperature Sensor Unit, and CompoBus/S I/O Link Unit	Expansion I/O Units, Analog I/O Unit, Temperature Sensor Unit, and CompoBus/S I/O Link Unit
I/O memory	Input bits		IR 00000 to IR 00915	IR 00000 to IR 00915
	Output bits		IR 01000 to IR 01915	IR 01000 to IR 01915
I/O memory	Work bits		672 bits: IR 02800 to IR 02915, IR 03800 to IR 04915, IR 20000 to IR 22715	928 bits: IR 02000 to IR 04915, IR 20000 to IR 22715
	SR (Special Relay) area		448 bits: SR 22800 to SR 25515	448 bits: SR 22800 to SR 25515
	TR (Temporary Relay) area		8 bits: TR0 to TR7	8 bits: TR0 to TR7
	HR (Holding Relay) area		320 bits: HR 0000 to HR 1915	320 bits: HR 0000 to HR 1915
	AR (Auxiliary Relay) area		384 bits: AR 0000 to AR 2315	384 bits: AR 0000 to AR 2315
	LR (Link Relay) area		256 bits: LR 0000 to LR 1515	256 bits: LR 0000 to LR 1515
	Timer/Counter area		256 bits: TIM/CNT 000 to TIM/CNT 255	256 bits: TIM/CNT 000 to TIM/CNT 255
	DM (Data Memory) area	Read/write area	2,048 words (DM 0000 to DM 2047)	2,048 words (DM 0000 to DM 2047)
		Read-only area	456 words (DM 6144 to DM 6599)	456 words (DM 6144 to DM 6599)
		PC Setup	56 words (DM 6600 to DM 6655)	56 words (DM 6600 to DM 6655)
Memory backup	Program area, read-only DM area (including PC Setup)		Flash memory backup	Flash memory backup
	Read/write DM area, HR area, AR area, and counters		Internal battery backup (2-year lifetime at 25°C, replaceable)	CPU Unit with clock: Internal battery backup (2-year lifetime at 25°C, replaceable) CPU Unit without clock: Capacitor backup (10-day backup at 25°C) or optional battery backup (2 years at 25°C, replaceable)
CompoBus/S Master Functions			Up to 32 Slaves can be connected and up to 256 I/O points can be controlled.	---
DeviceNet Slave Functions			DeviceNet Remote I/O Link Use up to 1,024 I/O points in the I/O Link. Explicit Message Communications Any PC data area can be accessed from the Master.	---

Item		CPM2C-S	CPM2C
Interrupt inputs (interrupt input mode)		2	4 (20-point CPU Unit), 2 (10-point CPU Unit)
Interrupt inputs (counter mode)	Counter mode	Incrementing counter Decrementing counter	Incrementing counter Decrementing counter
	Counter upper limit	2 kHz	2 kHz
	SR 244 to SR 247	Contains counter PV.	Contains counter PV.
	Method(s) to read counter PV	Read SR 244 to SR 247. Execute PRV(62).	Read SR 244 to SR 247. Execute PRV(62).
	Method to change counter PV	Execute INI(61).	Execute INI(61).
Interval timer	One-shot mode	Yes	Yes
	Scheduled interrupt mode	Yes	Yes

Item		CPM2C-S	CPM2C/CPM2A
Quick-response inputs	Setting the quick-response function	PC Setup	PC Setup
	INT(89) (Mask)	Not supported (ignored)	Not supported (ignored)
	INT(89) (Read mask)	Reads mask status.	Reads mask status.
	INT(89) (Clear)	Not supported (ignored)	Not supported (ignored)
	Minimum pulse width	50 µs min.	50 µs min.
High-speed counter	Count mode	Differential-phase (up/down) mode Pulse plus direction mode Up/down pulse mode Increment mode	Differential-phase (up/down) mode Pulse plus direction mode Up/down pulse mode Increment mode
	Max. counter frequency	5 kHz in differential-phase (up/down) mode 20 kHz in pulse plus direction mode, up/down pulse mode, and increment mode	5 kHz in differential-phase (up/down) mode 20 kHz in pulse plus direction mode, up/down pulse mode, and increment mode
	Counter PV range	–8,388,608 to 8,388,607 in differential-phase (up/down) mode, pulse plus direction mode, and up/down pulse mode 0 to 16,777,215 in increment mode	–8,388,608 to 8,388,607 in differential-phase (up/down) mode, pulse plus direction mode, and up/down pulse mode 0 to 16,777,215 in increment mode
	Check when registering target value match table	Same direction, same SV not possible	Same direction, same SV not possible
	Method used to reference the target value match interrupt table	Comparison of all values in the table, regardless of order of appearance in table	Comparison of all values in the table, regardless of order of appearance in table
	Reading range-comparison results	Check AR 1100 to AR 1107 or execute PRV(62).	Check AR 1100 to AR 1107 or execute PRV(62).
	Reading status	Check AR 1108 (comparison in progress), check AR 1109 (high-speed counter PV overflow/ underflow), or execute PRV(62).	Check AR 1108 (comparison in progress), check AR 1109 (high-speed counter PV overflow/ underflow), or execute PRV(62).
Pulse synchronization		Supported.	Supported.

Item		CPM2C-S	CPM2C/CPM2A
Pulse output control	Trapezoidal acceleration/ deceleration	Supported with ACC(—). The initial frequency can be set.	Supported with ACC(—). The initial frequency can be set.
	PWM(—) output	Supported.	Supported.
	Number of simultaneous pulse outputs	2 max.	2 max.
	Maximum frequency	10 kHz max.	10 kHz max.
	Minimum frequency	10 Hz	10 Hz
	Pulse output quantity	–16,777,215 to 16,777,215	–16,777,215 to 16,777,215
	Direction control	Supported.	Supported.
	Positioning to absolute positions	Supported.	Supported.
	Bit status while pulses are being output	No effect	No effect
	Reading PV	Read SR 228 through SR 231 or execute PRV(62).	Read SR 228 through SR 231 or execute PRV(62).
	Resetting PV	Supported.	Supported.
	Status outputs	Accelerating/decelerating PV overflow/underflow Pulse quantity set Pulse output completed Pulse output status	Accelerating/decelerating PV overflow/underflow Pulse quantity set Pulse output completed Pulse output status

Item		CPM2C-S	CPM2C
Analog controls		None	None
Clock function		Internal	Internal or none
	Words containing time info.	AR 17 to AR 21	AR 17 to AR 21
Analog I/O		Analog I/O Units can be connected.	Analog I/O Units can be connected.
Temperature monitoring		The CPU Unit can receive temperature sensor input from either thermocouples or platinum resistance thermometers.	The CPU Unit can receive temperature sensor input from either thermocouples or platinum resistance thermometers.
CompoBus/S communications		A CompoBus/S I/O Link Unit can be connected to provide CompoBus/S Slave functions. CompoBus/S Master functions are standard in all CPU Units.	A CompoBus/S I/O Link Unit can be connected to provide CompoBus/S Slave functions.
Communications switch		This switch determines whether communications are governed by the standard settings or PC Setup settings. Also sets the Programming Device connection.	This switch determines whether communications are governed by the standard settings or PC Setup settings. Also sets the Programming Device connection.

Item		CPM2C-S	CPM2C
Battery	Battery	Internal lithium battery backup	CPU Unit with clock: Internal lithium battery backup CPU Unit without clock: Capacitor backup or optional lithium battery backup
	Battery replacement	Possible	Possible
	Life expectancy/ backup time	2-year lifetime at 25°C	CPU Unit with clock: 2-year lifetime at 25°C CPU Unit without clock (capacitor): 10-day backup at 25°C CPU Unit without clock (lithium battery): 5-year lifetime at 25°C
	Battery error detection	Supported.	Supported.
Communications (in CPU Unit)	Peripheral port (via communications port)	Programming Console (Set with Communications Switch.) Peripheral bus (Set with Communications Switch.) Host Link (with Slave-initiated communications) No-protocol	Programming Console (Set with Communications Switch.) Peripheral bus (Set with Communications Switch.) Host Link (with Slave-initiated communications) No-protocol
	RS-232C port (via communications port)	Peripheral bus (Set with Communications Switch.) Host Link No-protocol 1:1 PC LInk 1:1 NT Link	Peripheral bus (Set with Communications Switch.) Host Link No-protocol 1:1 PC LInk 1:1 NT Link
Input time constant		Can be set to 1, 2, 3, 5, 10, 20, 40, or 80 ms. (Default: 10 ms)	Can be set to 1, 2, 3, 5, 10, 20, 40, or 80 ms. (Default: 10 ms)

Differences in I/O Memory

IR Area Differences

Function	CPM2C-S	CPM2C
CompoBus/S input bits	IR 020 to IR 027	---
CompoBus/S output bits	IR 030 to IR 037	
Work bits	672 bits: IR 028 to IR 029 IR 038 to IR 049 IR 200 to IR 227	928 bits: IR 028 to IR 049 IR 200 to IR 227

AR Area Differences

Function	CPM2C-S	CPM2C
DeviceNet Status	AR 00	---
CompoBus/S Active Slave Flags and Communications Error Flags	AR 04 to AR 07	
CompoBus/S Master ASIC Error	AR 1315	

PC Setup Differences

Function	CPM2C-S	CPM2C
Maximum number of CompoBus/S nodes	DM 6603 bits 00 to 03	---
CompoBus/S communications mode	DM 6603 bits 04 to 07	
DeviceNet Read/Write area (Default or DM 6606 to DM 6609)	DM 6605 bits 00 to 03	
DeviceNet I/O Link Write Area data area	DM 6606 bits 00 to 07	
DeviceNet I/O Link Write Area number of bytes	DM 6606 bits 08 to 15	
DeviceNet I/O Link Write Area starting address	DM 6607 bits 00 to 15	
DeviceNet I/O Link Read Area data area	DM 6608 bits 00 to 07	
DeviceNet I/O Link Read Area number of bytes	DM 6608 bits 08 to 15	
DeviceNet I/O Link Read Area starting address	DM 6609 bits 00 to 15	

1-6 Preparation for Operation

Follow the steps listed below when setting up a CPM2C-S system.

1,2,3...

1. System Design
   - Select a CPM2C-S CPU Unit, Expansion Units, and Expansion I/O Units with the specifications required in the controlled system.
   - Design external fail-safe circuits such as interlock circuits and limit circuits.

   Refer to *2-1 Specifications* and *3-1 Design Precautions* for details.
2. Installation
   - Connect the Expansion Units and Expansion I/O Units.
   - Install the CPU Unit. (DIN-track installation)

   Refer to *3-3 Installing the CPM2C-S* and *3-4 Wiring and Connections* for details.
3. Wiring
   - Wire the power supply and I/O devices.
   - Wire the DeviceNet transmission line.
   - Wire the CompoBus/S transmission line.
   - Connect communications devices if necessary.
   - Connect the Programming Console.

   Refer to *3-4 Wiring and Connections, 8-1 Using a Programming Console,* for details.
4. Initial Settings
   - Set the DeviceNet node number and communications speed with the rotary and DIP switches on the front of the CPU Unit.
   - Set the Communications Switches on the front of the CPU Unit, if necessary. (The switches must be set when a device other than the Programming Console is connected or the standard communications settings are not used.)

- Connect the Programming Console, set the mode switch to PROGRAM mode, and turn ON the PC.
- Check the CPU Unit's LED indicators and the Programming Console's display.
- Clear the PC's memory. (All Clear)
- Make PC Setup settings.

Refer to *3-3 Installing the CPM2C-S* and *8-1-4 Preparation for Operation* for details.

5. Create Ladder Program
   - Create a ladder program to control the system.

   Refer to *SECTION 8 Using Programming Devices* and the *Programming Manual* for details.
6. Write Ladder Program in PC
   - Write the ladder program in the PC with the Programming Console or transfer the program to the PC from the Support Software.

   Refer to *SECTION 8 Using Programming Devices*.
7. Test Run
   - Check I/O wiring in PROGRAM mode.
   - Check and debug program execution in MONITOR mode.

   Refer to *SECTION 9 Test Runs and Error Processing* for details.

SECTION 2
Unit Components and Specifications

This section provides the technical specifications of the CPM2C-S CPU Unit, Adapter Units, and AC Power Supply Unit and describes the main components of these Units.

Refer to the *CPM2C Programmable Controller Operation Manual* (W356) for descriptions of the specifications and installation of Expansion I/O Units and refer to the *CPM1/CPM1A/CPM2A/CPM2C/SRM1(-V2) Programmable Controllers Programming Manual* (W353) for descriptions of the specifications and installation of Expansion Units.

2-1 Specifications 34
- 2-1-1 General Specifications 34
- 2-1-2 Characteristics 34
- 2-1-3 I/O Specifications. 37
- 2-1-4 AC Power Supply Unit Specifications 42

2-2 Unit Components 43
- 2-2-1 CPU Unit Components. 43
- 2-2-2 Expansion I/O Units. 48
- 2-2-3 AC Power Supply Unit. 48
- 2-2-4 CPM2C-CIF01-V1 Peripheral/RS-232C Adapter Unit 48
- 2-2-5 CPM2C-CIF11 RS-422/RS-232C Adapter Unit 50

2-1 Specifications

2-1-1 General Specifications

Item		Specifications	
		CPM2C-S100C-DRT CPM2C-S110C-DRT	**CPM2C-S100C CPM2C-S110C**
Internal power supply voltage		20.4 to 26.4 VDC (24 VDC –15% to 10%)	
Communications power supply voltage		11 to 25 VDC (supplied by communications connector)	---
Power consumption	Internal power supply	4 W max. (See note.)	3 W max. (See note.)
	Communications power supply	30 mA max.	---
Inrush current		25 A max.	
Insulation resistance		20 MΩ min. (at 500 VDC) between insulated circuits	
Dielectric strength		2,300 VAC for 1 min (between insulated circuits)	
Noise immunity		Conforms to IEC61000-4-4; 2 kV (power lines)	
Vibration resistance		10 to 57 Hz, 0.075-mm double amplitude, 57 to 150 Hz, acceleration: 9.8 m/s^2 in X, Y, and Z directions for 80 minutes each (Time coefficient; 8 minutes × coefficient factor 10 = total time 80 minutes)	
Shock resistance		147 m/s^2 three times each in X, Y, and Z directions	
Ambient temperature		Operating: 0 to 55°C Storage: –20 to 75°C (except for the battery)	
Humidity		10% to 90% (with no condensation)	
Atmosphere		Must be free from corrosive gas	
Power interrupt time		2 ms min.	

Note The above figure for power consumption includes the power consumption of the Programming Console and Adapter Unit (CIF□□).

2-1-2 Characteristics

Item	Specifications
Control method	Stored program method
I/O control method	Cyclic scan with direct output (Immediate refreshing can be performed with IORF(97).)
Programming language	Ladder diagram
Instruction length	1 step per instruction, 1 to 5 words per instruction
Instructions	Basic instructions: 14 Special instructions: 105 instructions, 185 variations
Execution time	Basic instructions: 0.64 µs (LD instruction) Special instructions: 7.8 µs (MOV instruction)
Program capacity	4,096 words
Maximum I/O capacity	362 points CPU Unit only: 10 points Expanded system: + 96 points (three 32-point Expansion I/O Units) CompoBus/S: + 256 points
Input bits	160 bits: IR 00000 to IR 00915 (Bits not used for input bits can be used for work bits.)
Output bits	160 bits: IR 01000 to IR 01915 (Bits not used for output bits can be used for work bits.)
CompoBus/S input bits	128 bits: IR 02000 to IR 02715 (Bits not used for CompoBus/S input bits can be used for work bits.)
CompoBus/S output bits	128 bits: IR 03000 to IR 03715 (Bits not used for CompoBus/S output bits can be used for work bits.)
Work bits	672 bits: IR 02800 to IR 02915, IR 03800 to IR 04915, and IR 20000 to IR 22715

Item	Specifications
Special bits (SR area)	448 bits: SR 22800 to SR 25515
Temporary bits (TR area)	8 bits (TR0 to TR7)
Holding bits (HR area)	320 bits: HR 0000 to HR 1915 (Words HR 00 to HR 19)
Auxiliary bits (AR area)	384 bits: AR 0000 to AR 2315 (Words AR 00 to AR 23)
Link bits (LR area)	256 bits: LR 0000 to LR 1515 (Words LR 00 to LR 15)
Timers/Counters	256 timers/counters (TIM/CNT 000 to TIM/CNT 255) 1-ms timers: TMHH(—) 10-ms timers: TIMH(15) 100-ms timers: TIM 1-s/10-s timers: TIML(—) Decrementing counters: CNT Reversible counters: CNTR(12)
CompoBus/S Master functions	Up to 32 Slaves can be connected and up to 256 I/O points can be controlled.
DeviceNet Slave functions	DeviceNet Remote I/O Link Use up to 1,024 I/O points in the I/O Link. Explicit Message Communications Any PC data area can be accessed from the Master.
Data memory	Read/Write: 2,048 words (DM 0000 to DM 2047)* Read-only: 456 words (DM 6144 to DM 6599) PC Setup: 56 words (DM 6600 to DM 6655) *The Error Log is contained in DM 2000 to DM 2021.
Interrupt processing	2 interrupts Shared by the external interrupt inputs (counter mode) and the quick-response inputs.
Interval timer interrupts	1 (Scheduled Interrupt Mode or Single Interrupt Mode)
High-speed counter	One high-speed counter: 20 kHz single-phase or 5 kHz two-phase (linear count method) Counter interrupt: 1 (set value comparison or set-value range comparison)
Interrupt Inputs (Counter mode)	2 inputs Shared by the external interrupt inputs and the quick-response inputs.
Pulse output	2 points with no acceleration/deceleration, 10 Hz to 10 kHz each, and no direction control. One point with trapezoid acceleration/deceleration, 10 Hz to 10 kHz, and direction control. Two points with variable duty-ratio outputs. (Pulse outputs can be used with transistor outputs only, they cannot be used with relay outputs.)
Synchronized pulse control	1 point: A pulse output can be created by combining the high-speed counter with pulse outputs and multiplying the frequency of the input pulses from the high-speed counter by a fixed factor. (This output is possible with transistor outputs only, it cannot be used with relay outputs.)
Quick-response inputs	2 inputs Shared by the external interrupt inputs and the interrupt inputs (counter mode). Min. input pulse width: 50 μs max.
Input time constant (ON response time = OFF response time)	Can be set for all input points. (1 ms, 2 ms, 3 ms, 5 ms, 10 ms, 20 ms, 40 ms, or 80 ms)
Clock function	Shows the year, month, day of the week, day, hour, minute, and second. (Battery backup)
Communications functions	A Connecting Cable (CPM2C-CN111, CS1W-CN114, or CS1W-CN118) or Adapter Unit (CPM2C-CIF01 or CPM2C-CIF11) is required to connect to the CPM2C-S' communications port. The communications port can be used as both a peripheral and RS-232C port. Peripheral port: Supports Host Link, peripheral bus, no-protocol, or Programming Console connections. RS-232C port: Supports Host Link, no-protocol, 1:1 Slave Unit Link, 1:1 Master Unit Link, or 1:1 NT Link connections.
Memory protection (See notes 1 and 2.)	HR area, AR area, program contents, read/write DM area contents, and counter values maintained during power interruptions.

Item	Specifications
Memory backup (See notes 1 and 2.)	Flash memory: Program, read-only DM area, and PC Setup Memory backup: The read/write DM area, HR area, AR area, and counter values are backed up. (The battery has a 2-year lifetime at 25°C and it is replaceable.)
Self-diagnostic functions	CPU Unit failure (watchdog timer), I/O bus error, battery error, and memory failure
Program checks	No END instruction, programming errors (checked when operation is started)

Note

1. The DM area, HR area, AR area, and counter values are backed up. If the backup battery or capacitor is discharged, the contents of these areas will be lost and the data values will revert to the defaults.
2. The contents of the program area, read-only DM area (DM 6144 to DM 6599), and PC Setup (DM 6600 to DM 6655) are stored in flash memory. The contents of these areas will be read from flash memory the next time the power is turned ON, even if the backup battery or capacitor is discharged.

   When data has been changed in any of these areas, write the new values to flash memory by switching the CPM2C-S to MONITOR or RUN mode, or by turning the power OFF and then ON again.
3. Changes made while in MONITOR mode using, for example, online editing, are written to flash memory in real-time.

2-1-3 I/O Specifications

CPU Unit Input Specifications

Item	Inputs	Specification
Input voltage	All	24 VDC $^{+10\%}/_{-15\%}$
Input impedance	IN00000 to IN00001	2.7 kΩ
	IN00002 to IN00004	3.9 kΩ
	IN00005	4.7 kΩ
Input current	IN00000 to IN00001	8 mA typical
	IN00002 to IN00004	6 mA typical
	IN00005	5 mA typical
ON voltage/current	IN00000 to IN00001	17 VDC min., 5 mA
	IN00002 and up	14.4 VDC min., 3.5 mA
OFF voltage/current	All	5.0 VDC max., 1.1 mA
ON delay	All	1 to 80 ms max. Default: 10 ms (See note.)
OFF delay	All	1 to 80 ms max. Default: 10 ms (See note.)
Circuit configuration	IN00000 to IN00001	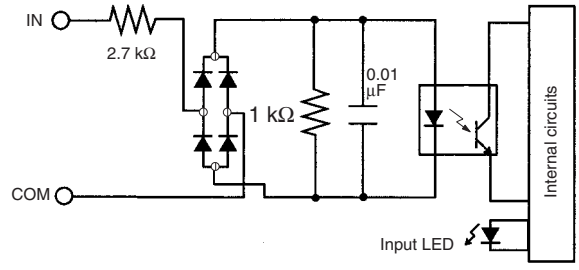
	IN00002 to IN00004	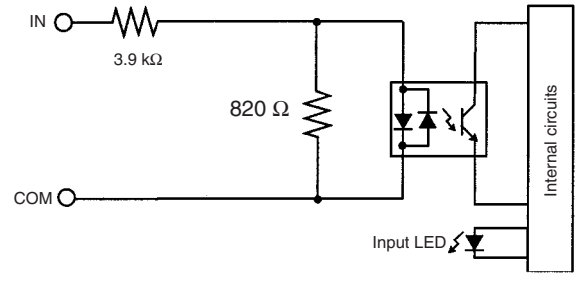
	IN00005	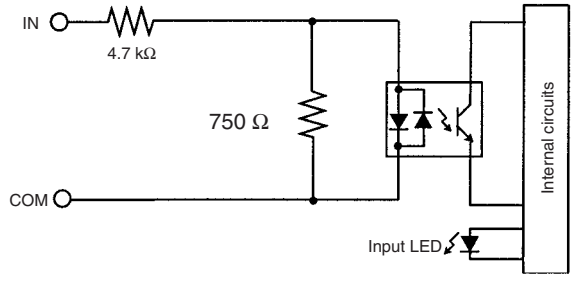

Note The input time constant can be set to 1, 2, 3, 5, 10, 20, 40, or 80 ms in the PC Setup.

High-speed Counter Inputs

The following CPU Unit input bits can be used as high-speed counter inputs. The maximum count frequency is 5 kHz in differential phase mode and 20 kHz in the other modes.

Input	Function			
	Differential phase mode	**Pulse plus direction input mode**	**Up/down input mode**	**Increment mode**
IN00000	A-phase pulse input	Pulse input	Increment pulse input	Increment pulse input
IN00001	B-phase pulse input	Direction input	Decrement pulse input	Normal input
IN00002	Z-phase pulse input or hardware reset input (IN00002 can be used as a normal input when it is not used as a high-speed counter input.)			

The minimum pulse widths for inputs IN00000 (A-phase input) and IN00001 (B-phase input) are as follows:

Pulse plus direction input mode, Up/down input mode, Increment mode

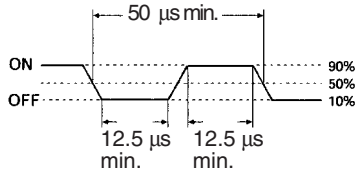

Differential phase mode

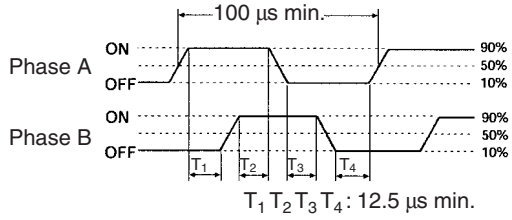

The minimum pulse width for input IN00002 (Z-phase input) is as follows:

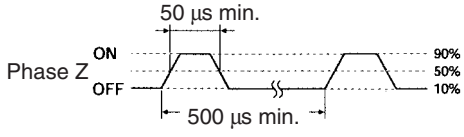

Interrupt Inputs

CPM2C-S PCs are equipped with inputs that can be used as interrupt inputs (interrupt input mode or counter mode) and quick-response inputs. The minimum pulse width for these inputs is 50 µs.

Inputs IN00003 and IN00004 can be used as interrupt inputs.

CPU Unit Output Specifications

Transistor Outputs (Sinking or Sourcing)

Item	Specification
Max. switching capacity (See note)	OUT01000 to OUT01005: 40 mA/4.5 VDC to 300 mA/20.4 VDC, 300 mA (20.4 VDC to 26.4 VDC) When using OUT01000 or OUT01001 as a pulse output, connect a dummy resistor as required to bring the load current between 10 and 150 mA. If the load current is below 10 mA, the ON/OFF response time will be longer and high-speed pulses will not be output. The transistor will heat if used at 150 mA or higher, possibly damaging elements.
Min. switching capacity	0.5 mA
Max. inrush current	0.9 A for 10 ms (charging and discharging waveform)
Leakage current	0.1 mA max.
Residual voltage	0.8 V max.
ON delay	OUT01000 and OUT01001: 20 µs max. OUT01002 and up: 0.1 ms max.
OFF delay	OUT01000 and OUT01001: 40 µs max. 10 to 300 mA 0.1 ms max. 0.5 to 10 mA OUT01002 and up: 1 ms max.
Fuse	1 fuse for each 2outputs (cannot be replaced by user)

Item	Specification
Circuit configuration	**Sinking Outputs** 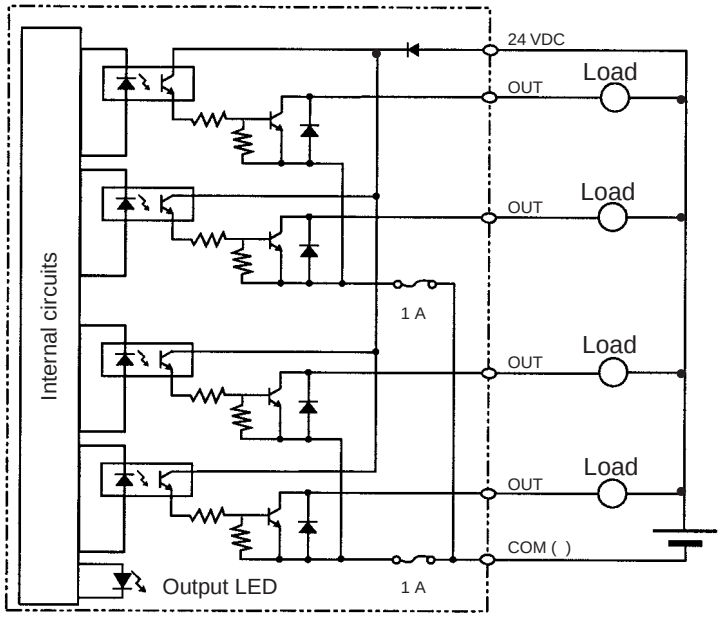 **Sourcing Outputs** 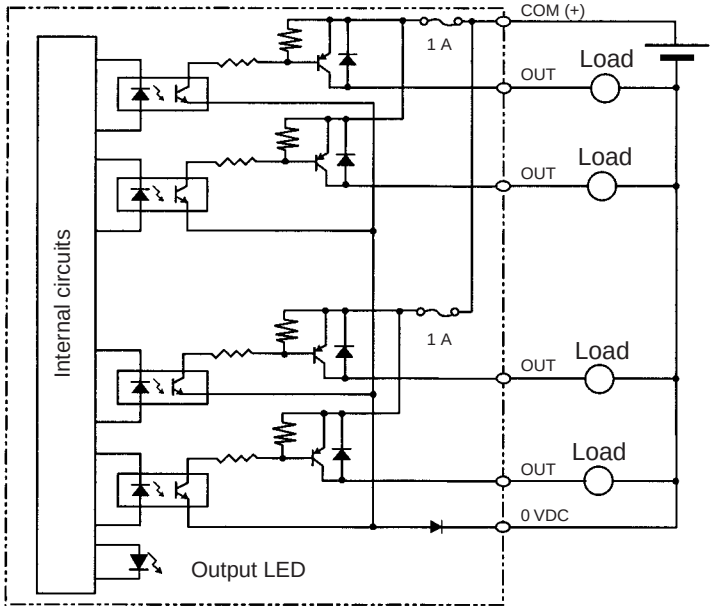

Note The following graph shows the maximum switching capacity.

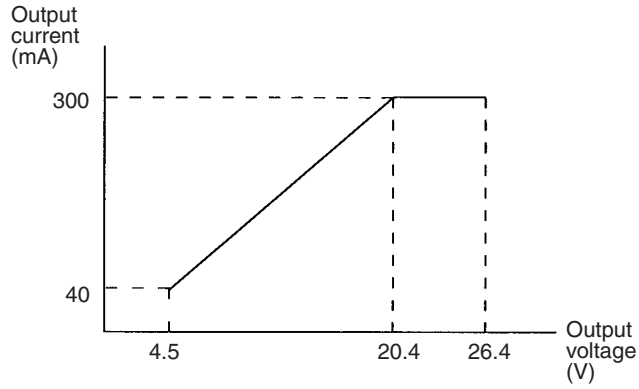

⚠ **Caution** Do not apply voltage in excess of the maximum switching capacity to an output terminal. It may result in damage to the product or fire.

⚠ **Caution** Check that wiring has been performed correctly before supplying power. Supplying power with incorrect wiring may result in damage to internal circuits.

Expansion I/O Unit I/O Specifications

Note Refer to the *CPM2C Programmable Controller Operation Manual* (W356) for the I/O specifications of the Expansion I/O Units.

2-1-4 AC Power Supply Unit Specifications

Item			Specification
Rating			24 VDC, 600 mA
Efficiency			75% min. (at rated output)
Input conditions	Rated voltage		100 to 240 VAC
	Frequency		47 to 63 Hz
	Allowable voltage range		85 to 264 VAC
	Current	100 V	0.4 A
		200 V	0.2 A
	Leakage current	100 V	0.5 mA max. (at rated output)
		200 V	1 mA max. (at rated output)
	Inrush current	100 V	15 A (at 25°C cold start)
		200 V	30 A (at 25°C cold start)
Output characteristics	Output voltage accuracy		10%/–15% (including input, load, and temperature fluctuations)
	Minimum output current		30 mA
	Ripple noise voltage		2% (p-p) max.
	Input fluctuation		0.75% max.
	Load fluctuation		4% max.
	Temperature fluctuation		0.05%/°C max.
	Startup time		300 ms max. (at input voltage of 100 VAC or 200 VAC and the rated output)
	Output hold time		10 ms (at input voltage of 100 VAC or 200 VAC and the rated output)
Overcurrent protection			Self-resetting, operates at 105% to 350% of the rated current, suspended and independent operation
Overvoltage protection			None
Ambient operating temperature			0 to 55°C
Ambient storage temperature			–20 to 75°C
Ambient operating humidity			10% to 90% (no condensation)
Dielectric strength			2,000 V for 1 min between all inputs and GR Leakage current: 10 mA 3,000 V for 1 min between all inputs and all outputs Leakage current: 10 mA 1,000 V for 1 min between all outputs and GR Leakage current: 10 mA
Insulation resistance			100 MΩ min. at 500 VDC between all outputs and any input, and between all outputs and GR
Vibration resistance			10 to 57 Hz, amplitude, 57 to 150 Hz, acceleration: 9.8 m/s^2 in X, Y, and Z directions for 80 minutes according (Time coefficient: 8 minutes × coefficient factor 10 = total time 80 min.)
Shock resistance			147 m/s^2 3 times each in X, Y, and Z directions
Noise terminal voltage			FCC class A

2-2 Unit Components

2-2-1 CPU Unit Components

CPU Unit Component Names

Front View: CPM2C-S100C and CPM2C-S110C

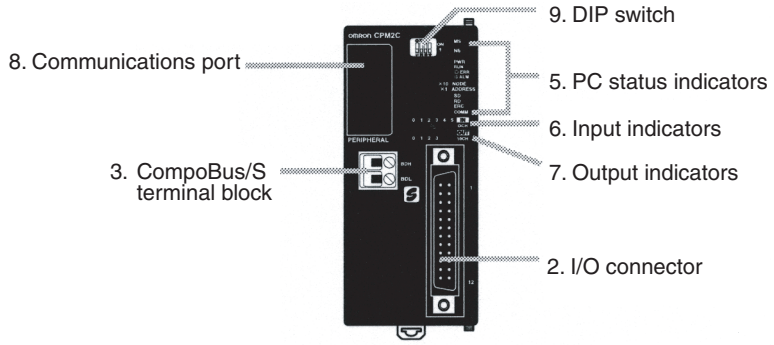

Right Side View

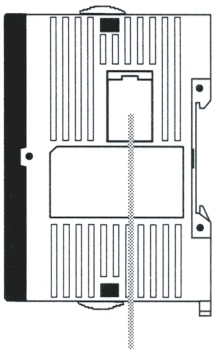

Front View: CPM2C-S100C-DRT and CPM2C-S110C-DRT

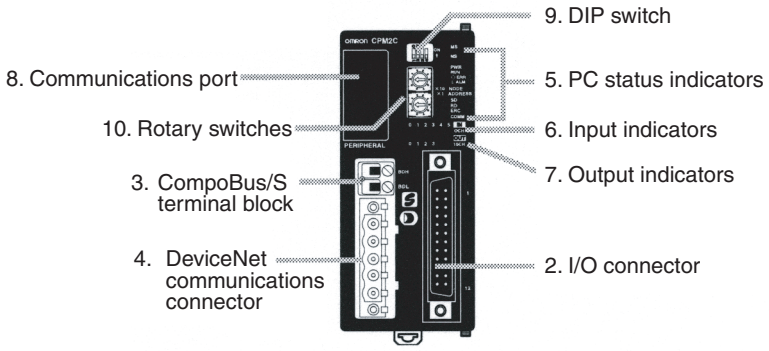

Top View

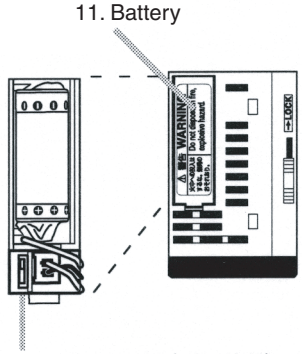

Bottom View

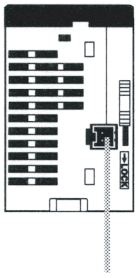

CPU Unit Component Descriptions

1,2,3...

1. Power Supply Connector

   Connect the power supply (24 VDC) to this connector.
   Connect the provided power supply cable's red lead to +24 VDC and its black lead to 0 VDC.

2. I/O Connector

   Connects the CPU Unit to external input and output devices.

3. CompoBus/S Terminal Block

   Connects the CPU Unit to the CompoBus/S transmission line.

4. DeviceNet Communications Connector

Connects the CPU Unit to the DeviceNet transmission line. Use the connector included with the CPU Unit or an equivalent connector to connect to the DeviceNet transmission line.

5. PC Status Indicators

The following indicators show the operating status of the PC.

Indicator	Status	Meaning
PWR (green)	ON	Power is being supplied to the PC.
	OFF	Power isn't being supplied to the PC.
RUN (green)	ON	The PC is operating in RUN or MONITOR mode.
	OFF	The PC is in PROGRAM mode or a fatal error has occurred.
ERR/ALM (red)	ON	A fatal error has occurred. (PC operation stops.)
	Flashing	A non-fatal error has occurred. (PC operation continues.)
	OFF	Indicates normal operation.
SD (yellow)	Flashing	Data is being transmitted via CompoBus/S.
	OFF	Data isn't being transmitted via CompoBus/S.
RD (yellow)	Flashing	Data is being received via CompoBus/S.
	OFF	Data isn't being received via CompoBus/S.
ERC (red)	Flashing	A CompoBus/S communications error occurred.
	OFF	A CompoBus/S communications error hasn't occurred.
COMM (yellow)	Flashing	Data is being transferred via the communications port (peripheral or RS-232C).
	OFF	Data isn't being transferred via communications port.

The following indicators show the status DeviceNet communications and appear on the CPM2C-S100C-DRT and CPM2C-S110C-DRT only.

Indicator	Color	Status	Meaning
MS	Green	ON	Normal status
		Flashing	Incomplete settings (reading switch settings)
	Red	ON	Fatal hardware error (watchdog timer error)
		Flashing	Non-fatal error such as incorrect switch settings
	---	OFF	• Power is not being supplied. • Waiting for initialization to start • Reset in progress
NS	Green	ON	Online/Communications established (Normal network status when communications have been established)
		Flashing	Online/Communications not established (Normal network status when communications haven't been established)
	Red	ON	Fatal communications error (The Unit detected an error indicating that network communications are disabled.) • Node number duplication • Bus off error detected
		Flashing	Non-fatal communications error (Communications timeout)
	---	OFF	Offline/Power supply OFF Waiting for completion of the node number duplication check in the Master. • Incorrect switch settings • Power supply OFF

6. Input Indicators

   The input indicators are lit when the corresponding input terminal is ON. The status of an input indicator will reflect the status of the input even when that input is being used for a high-speed counter.

   Note a) When interrupt inputs are used in interrupt input mode, the indicator may not light even when the interrupt condition is met if the input is not ON long enough.

   b) Input indicators will reflect the status of the corresponding inputs even when the PC is stopped, but the corresponding input bits will not be refreshed.

7. Output Indicators

   The output indicators are lit when the corresponding output terminal is ON. The indicators are lit during I/O refreshing. The status of an output indicator will also reflect the status of the corresponding output when the output is being used as a pulse output.

8. Communications Port

   Connects the PC to a Programming Device (including Programming Consoles), host computer, or standard external device. Use a proper Connecting Cable (CPM2C-CN111, CS1W-CN114, or CS1W-CN118).

   Note a) A CQM1H-PRO01-E Programming Console can be connected directly to the PC.

   b) A C200H-PRO27-E Programming Console can be connected directly to the PC with a CS1W-CN224/CN624 Connecting Cable.

   c) Use a CPM2C-CN111 or CS1W-CN114 Connecting Cable to connect to the communications port as a peripheral port. The communications port can be used simultaneously as both a peripheral port and RS-232C port by using the CPM2C-CN111 Connecting Cable.

   d) Use a CPM2C-CN111 or CS1W-CN118 Connecting Cable to connect to the communications port as a RS-232C port. The communications port can be used simultaneously as both a peripheral port and RS-232C port by using the CPM2C-CN111 Connecting Cable

9. DIP Switch

   The DIP switch settings determine the DeviceNet communications speed and control the communications settings for the communications port (peripheral port and RS-232C port).

- DeviceNet communications speed

Pin 1	Pin 2	Speed	Max. transmission line length (see note)
OFF	OFF	125 kbps	500 m max.
ON	OFF	250 kbps	250 m max.
OFF	ON	500 kbps	100 m max.
ON	ON	Not used (invalid setting)	

Note Pins 1 and 2 are not used in the CPM2C-S100C/S110C. Leave pins 1 and 2 OFF in those CPU Units.

- RS-232C and Peripheral Port Settings

Pin 3	Effective port settings
OFF	The ports operate according to the settings in the PC Setup. RS-232C port settings: DM 6645 to DM 6649 Peripheral port settings: DM 6650 to DM 6654
ON	The ports operate with the standard communications settings.

- Operating Mode at Startup
  Pin 4 determines the operating mode at startup only if there isn't a Programming Device connected to the peripheral port.

Programming Device connected	Startup mode with pin 4 OFF	Startup mode with pin 4 ON
None	PROGRAM mode	RUN mode
Programming Console	Operating mode set on the Programming Console's mode switch	
Other device	PROGRAM mode	

10. Rotary Switches (-DRT versions only)

    The rotary switches set the PC's node number in the DeviceNet network. The allowed setting range is 00 to 63. (Settings 64 to 99 are not allowed.)

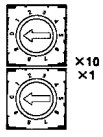

11. Battery

    This battery backs up memory in the CPU Unit. The battery is connected when the Unit is shipped.

12. Low Battery Detection Switch

    This switch enables or disables the detection of a low-battery error. When a battery is not connected, disable low-battery detection by sliding the switch back (toward the battery).

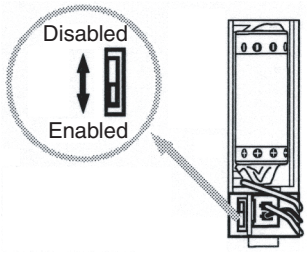

Switch position	Low-battery detection
Forward (away from battery)	Error detection enabled
Back (toward battery)	Error detection disabled

Note CPU Units without a clock are set by default to not detect a low battery. If the PLC Setup is cleared, the default setting will be changed so that a low battery is detected. If you connect the optional CPM2C-BAT01 Battery, also be sure to change the setting to detect a low battery.

13. Expansion I/O Connector

    Connects the PC's CPU Unit to an Expansion I/O Unit or Expansion Unit. Up to 3 Expansion I/O Units and Expansion Units can be connected to a CPU Unit. A cover for the expansion I/O connector is included with the CPU Unit.

I/O Connector Pin Allocation

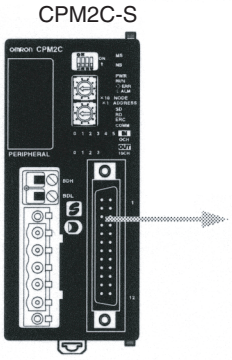

I/O pin allocation

CPM2C-S with sinking outputs

	A	B	
IN 0	1	1	IN 4
IN 1	2	2	IN 5
IN 2	3	3	NC
IN 3	4	4	NC
COM	5	5	COM
OUT 0	6	6	NC
OUT 1	7	7	NC
OUT 2	8	8	NC
OUT 3	9	9	NC
+24V	10	10	COM (–)
NC	11	11	NC
NC	12	12	NC

CPM2C-S with sourcing outputs

	A	B	
IN 0	1	1	IN 4
IN 1	2	2	IN 5
IN 2	3	3	NC
IN 3	4	4	NC
COM	5	5	COM
OUT 0	6	6	NC
OUT 1	7	7	NC
OUT 2	8	8	NC
OUT 3	9	9	NC
0V	10	10	COM (+24V)
NC	11	11	NC
NC	12	12	NC

CompoBus/S Terminal Block Configuration

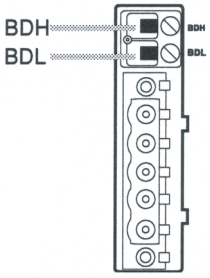

DeviceNet Communications Connector Configuration

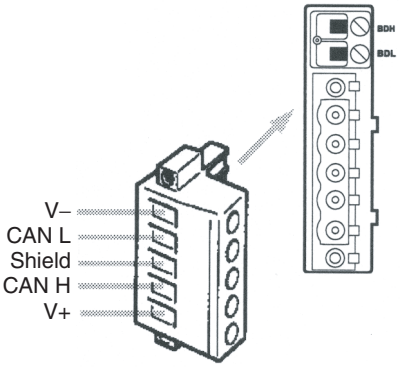

XW4B-05C1-H1-D DeviceNet Communications Connector (included with the CPM2C-S)

2-2-2 Expansion I/O Units

Note Refer to the *CPM2C Programmable Controller Operation Manual* (W356) for descriptions of the main components of the Expansion I/O Units and Expansion Units.

2-2-3 AC Power Supply Unit

Front View **Bottom Side**

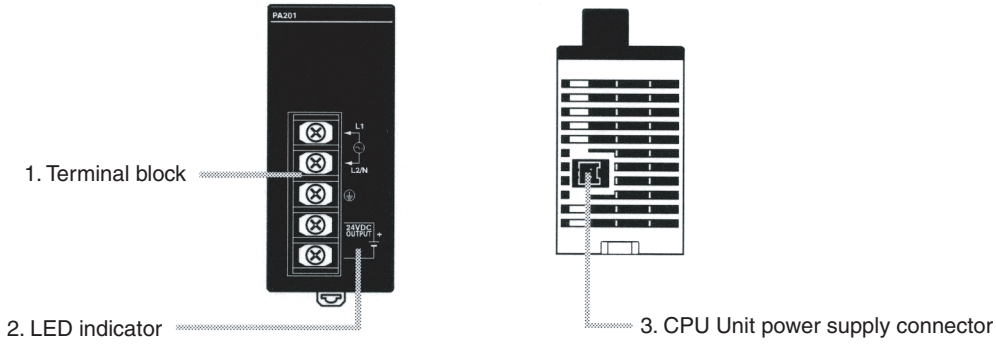

1,2,3... 1. Terminal Block

Terminals for AC power supply input and service power supply (24 VDC).

2. LED Indicator

Lights when power is supplied.

3. CPU Unit Power Supply Connector

Use the connecting cable provided as an accessory to connect this connector to the power supply connector on the CPU Unit (24 VDC).

Note The ratings for the CPM2C-PA201 AC Power Supply Unit are 100 to 240 VAC input; 24 VDC/600 mA output. The maximum current that can be supplied via the CPU Unit power supply connector and the service power supply terminals on the terminal block is 600 mA.

2-2-4 CPM2C-CIF01-V1 Peripheral/RS-232C Adapter Unit

Front View

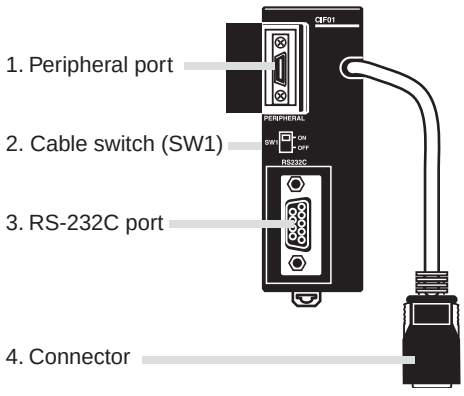

Do not use the CPM2C-CIF01-V1 with any PC other than the CPM2C. Do not connect another CPM2C-CIF01-V1 or the CPM2C-CIF11 to the CPM2C-CIF01-V1. The CPM2C-CN111 can be connected to the CPM2C-CIF01, but the peripheral port and the RS-232C port of the CPM2C-CN111 cannot be used simultaneously. If an attempt to use these ports simultaneously is made, communications will not be performed properly, and this may result in malfunction of equipment.

*: The CPM2C-CIF01 does not have a cable switch (SW1).

1,2,3... 1. Peripheral Port

Used to connect to Programming Devices (including Programming Consoles), host computers, or general-purpose external devices. Use a special connecting cable (CS1W-CN114, CS1W-CN118) for connections.
With the CPM2C-CIF01-V1, the cable switch (SW1) can be turned ON to

enable connecting to a personal computer with a CS1W-CN226/CN626 Connecting Cable.

Note a) The C200H-PRO27-E Programming Console can be connected directly to the CPM2C's CPU Unit using a special connecting cable (CS1W-CN224/624).

b) Use the CS1W-CN114 when using the port as a peripheral port.

c) Use the CS1W-CN118 when using the port as a RS-232C port.

2. Cable Switch (SW1, CPM2C-CIF01-V1 Only)

   Turn ON SW1 to use a CS1W-CN226/CN626 Connecting Cable to connect to a personal computer. Turn OFF SW1 to use any other cable.

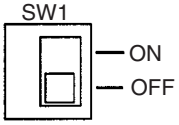

3. RS-232C Port

   Used to connect to the RS-232C interface of a personal computer or Programmable Terminal (operator interface).

Connector Pin Allocation

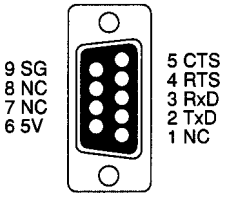

Internal Configuration

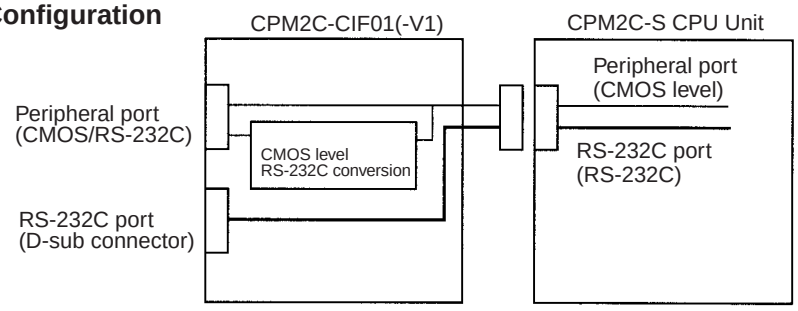

Peripheral port on CPM2C-CIF01-V1	Signal conversion	Outputs signals from the CPU Unit's CMOS interface without conversion, or converts CMOS level (CPU Unit side) to RS-232C (connected device side).
	Function	Host Link, peripheral bus, no-protocol, or Programming Console connections.
RS-232C port on CPM2C-CIF01-V1	Signal conversion	Outputs signals from the CPU Unit's CMOS interface without conversion.
	Function	Host Link, no-protocol, 1:1 Link, or 1:1 NT Link connections.

4. Connector

   Connects to the communications port on the CPU Unit.

2-2-5 CPM2C-CIF11 RS-422/RS-232C Adapter Unit

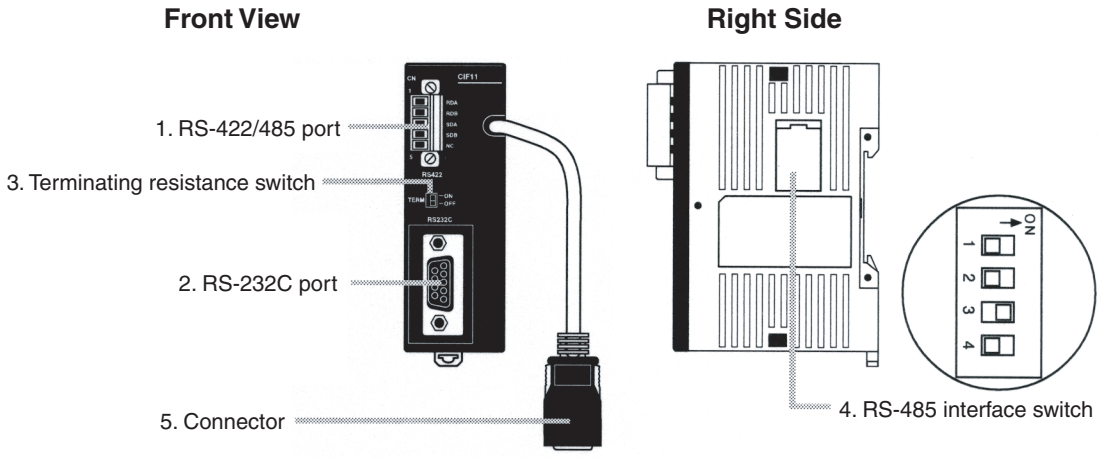

Note Do not use the CPM2C-CIF11 with any PC other than a CPM2C or CPM2C-S.

1,2,3... 1. RS-422/485 Port

Used to connect to host computers, or standard external devices.

Terminal Arrangement

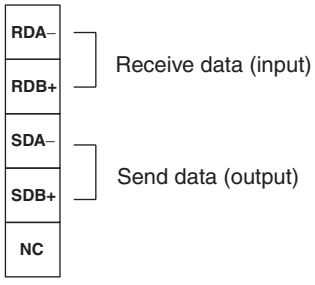

Note The maximum line length is 500 m.

2. RS-232C Port

Used to connect to the RS-232C interface of a personal computer or Programmable Terminal (operator interface).

Connector Pin Arrangement

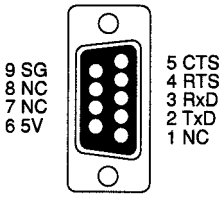

RS-422/485 Connection Example

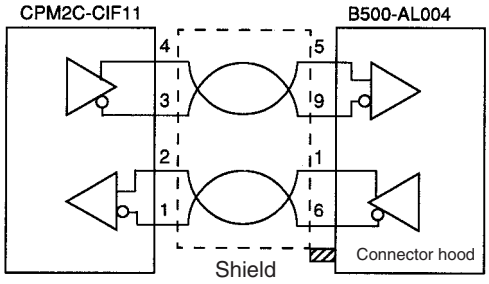

Internal Configuration

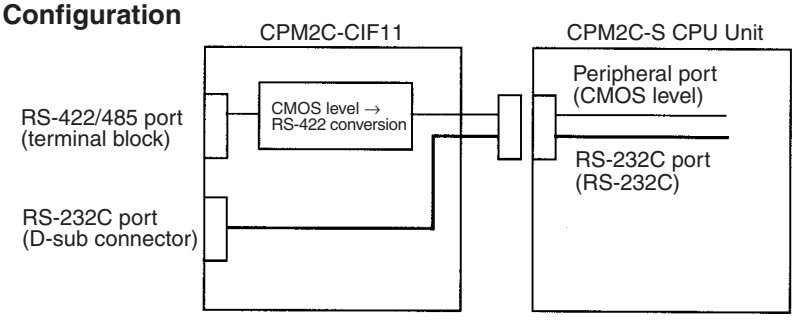

RS-422/485 port on CPM2C-CIF11	Signal conversion	Converts CMOS level (CPU Unit side) to RS-422 (connected device side). RS-422 (externally connected device) insulated using DC/DC converter or photocoupler.
	Function	Host Link, peripheral bus, or no-protocol connections.
RS-232C port on CPM2C-CIF11	Signal conversion	Outputs signals from the CPU Unit's CMOS interface without conversion.
	Function	Host Link, no-protocol, 1:1 Link, or 1:1 NT Link connections.

3. Terminating Resistance Switch

   Set this switch to ON only for double-ended connection to a Host Link network. This switch is factory-set to OFF.

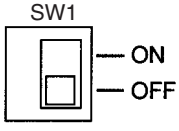

4. RS-485 Interface Switch

   Used to switch to the RS-485 interface, and to enable or disable RS/CS control when performing RS-485 communications.

SW2

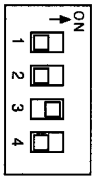

SW2	Factory setting
1	OFF
2	OFF
3	ON
4	OFF

SW2	Status			
SW2-1 SW2-2			SW2-1	
			OFF	ON
	SW2-2	OFF	4-wire communications	Setting not possible
		ON	Setting not possible	2-wire communications
SW2-3 SW2-4			SW2-3	
			OFF	ON
	SW2-4	OFF	Setting not possible	Data can be received at any time
		ON	RS control possible for CPU Unit	Setting not possible

Note Do not set both SW2-3 and SW2-4 to ON. Doing so may result in damage to internal circuitry. Set SW2-3 to OFF and SW2-4 to OFF when performing RS-485 2-wire communications.

5. Connector

   Connects to the communications port on the CPU Unit.

RS-422 Interface Block Diagram

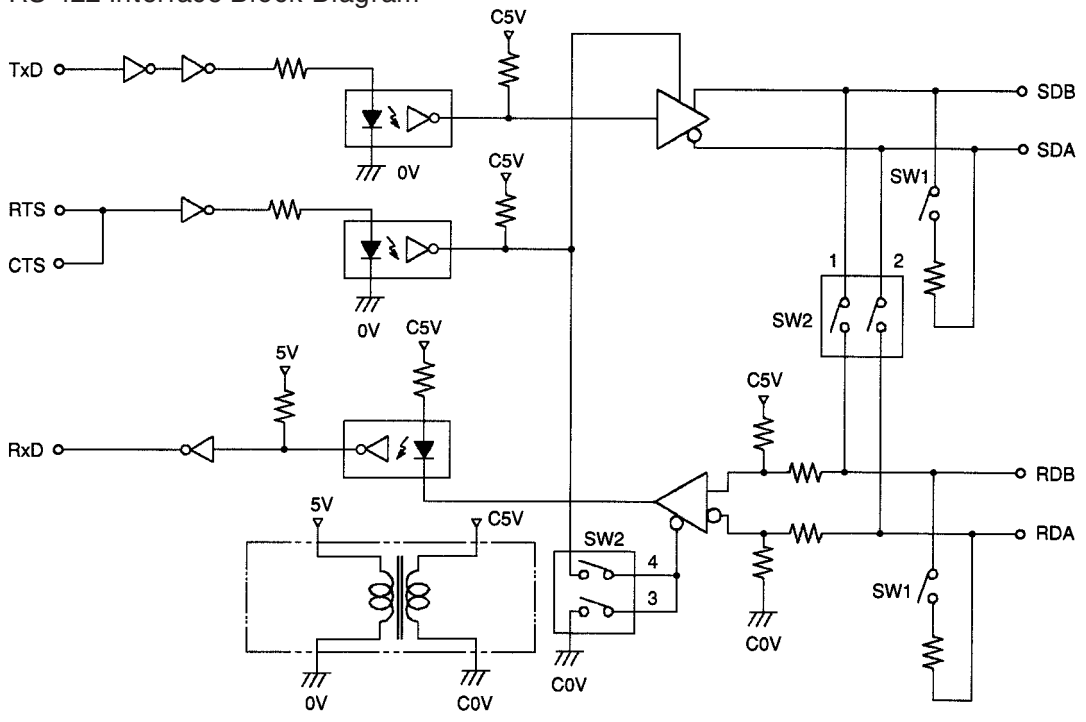

SECTION 3
Installation and Wiring

This section provides information on installing and wiring a CPM2C-S PC. Be sure to follow the directions and precautions in this section when installing the CPM2C-S in a panel or cabinet, wiring the power supply, or wiring I/O.

Refer to the *CPM2C Programmable Controller Operation Manual* (W356) for information on wiring Expansion I/O Units and Expansion Units.

3-1 Design Precautions 54
- 3-1-1 Power Supply Wiring 54
- 3-1-2 Power Supply Voltage 54
- 3-1-3 Interlock and Limit Circuits 54

3-2 Selecting an Installation Site 55
- 3-2-1 Installation Site Conditions 55
- 3-2-2 Panel/Cabinet Installation 55

3-3 Installing the CPM2C-S 57
- 3-3-1 Connecting Units 57
- 3-3-2 CPM2C-S Installation 58

3-4 Wiring and Connections 60
- 3-4-1 General Precautions for Wiring 60
- 3-4-2 Power Supply Wiring 61
- 3-4-3 Using the AC Power Supply Unit 62
- 3-4-4 Removing and Wiring I/O Connectors 64
- 3-4-5 Using Terminal Blocks 67
- 3-4-6 Connecting I/O Devices 67
- 3-4-7 Wiring CompoBus/S Transmission Lines 75
- 3-4-8 Wiring DeviceNet Communications Cables 77
- 3-4-9 Programming Device Connections 78
- 3-4-10 No-Protocol Communications 81
- 3-4-11 OMRON PT Connections 81
- 3-4-12 One-to-one PC Link Connections 82

3-1 Design Precautions

Observe the following precautions when designing a system incorporating a CPM2C-S PC.

3-1-1 Power Supply Wiring

Separate the power supply wiring from the control system, CPM2C-S system, and DC I/O system wiring. Separate the control circuits that supply power to the main Unit from the main circuits using dedicated circuit protectors and fuses.

3-1-2 Power Supply Voltage

⚠ **Caution** Use the power supply voltages indicated in *SECTION 2 Unit Components and Specifications*. Failure to adhere to the specifications may result in fire.
If the power supply voltage falls below 85% of the rated voltage, the CPM2C-S will stop and all outputs will be turned OFF. If low voltage affects the equipment, etc., provide a protection circuit which shuts OFF the output until the supply voltage returns to the rated value.
In places where power supply conditions are poor, take steps to ensure that power is supplied at the rated voltage. Be sure to adhere to safety precautions, such as providing breakers to prevent short circuits in external wiring.
When conducting any of the following operations, turn OFF the power to the PC. Electrocution, product damage and malfunction may result.

- Connecting or disconnecting Expansion I/O Units, Expansion Units, and CPU Units.
- Assembling Units.
- Connecting cables and wiring.
- Connecting or disconnecting connectors.
- Replacing the battery.

3-1-3 Interlock and Limit Circuits

⚠ **WARNING** Emergency stop circuits, interlock circuits, limit circuits, and similar safety measures must be provided in external control circuits (i.e., not in the Programmable Controller) to ensure safety in the system if an abnormality occurs due to malfunction of the PC or another external factor affecting the PC operation. Not providing proper safety measures may result in serious accidents.

The following diagram shows an example of an interlock circuit.

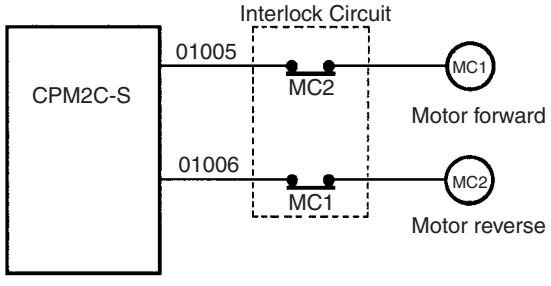

In the interlock circuit above, MC1 and MC2 can't be ON at the same time even if CPM2C-S outputs 01005 and 01006 are both ON (an incorrect PC operation).

3-2 Selecting an Installation Site

The CPM2C-S is resistant to harsh conditions and highly reliable, but installing the PC in a favorable site will maximize its reliability and operating lifetime.

⚠ **Caution** Be sure to install the CPM2C-S correctly, as outlined in this manual. Failure to do so may result in Unit malfunction.

3-2-1 Installation Site Conditions

Note Do not install the CPM2C-S under any of the following conditions.

- Locations subject to direct sunlight.
- Locations subject to a temperature below 0°C or over 55°C.
- Locations subject to a humidity below 10% or over 90%.
- Locations subject to condensation as the result of severe changes in temperature.
- Locations subject to corrosive or flammable gases.
- Locations subject to dust (especially iron dust) or salts.
- Locations subject to shock or vibration.
- Locations subject to exposure to water, oil, or chemicals.

Be sure that the conditions at the installation site conform to the CPM2C-S' general specifications. Refer to *2-1-1 General Specifications* for details.

Note Provide proper shielding when installing in the following locations:

- Locations subject to static electricity or other sources of noise.
- Locations subject to strong electromagnetic fields.
- Locations subject to possible exposure to radiation.
- Locations near to power supply lines.

3-2-2 Panel/Cabinet Installation

Consider PC operation, maintenance, and surrounding conditions when installing the CPM2C-S in a panel or cabinet.

Overheating

The operating temperature range for the CPM2C-S is 0 to 55°C. Be sure that there is adequate ventilation for cooling.

- Allow enough space for air circulation.
- Do not install the CPM2C-S above equipment that generates a large amount of heat, such as heaters, transformers, or large resistors.
- Install a cooling fan or system when the ambient temperature exceeds 55°C.

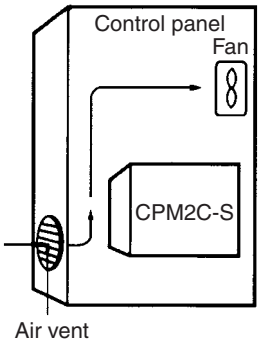

- The CPM2C-S CPU Unit itself can be installed in any orientation, but when the CPU Unit is combined with a Power Supply Unit, Expansion I/O Unit, or Expansion Unit the mounting orientation of the PC is restricted in the way described below.
  - When a PC is installed as shown in the following diagram, Power Supply Units, Expansion I/O Units, and Expansion Units can be mounted. The ambient operating temperature range is 0 to 55°C.

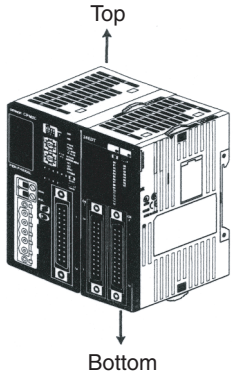

  - When a PC is installed as shown in the following diagram, Power Supply Units, Expansion I/O Units, and Expansion Units cannot be mounted. The ambient operating temperature range is 0 to 55°C.

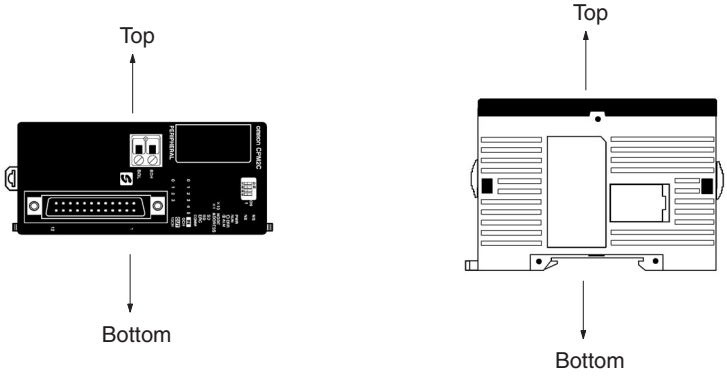

  - When a PC is installed in any other way, Power Supply Units, Expansion I/O Units, and Expansion Units cannot be mounted and the ambient operating temperature range is 0 to 50°C.

Electrical Noise

Power lines and high-voltage equipment can cause electrical noise in the PC.

- Do not install the CPM2C-S in a panel or cabinet with high-voltage equipment.
- Allow at least 200 mm between the CPM2C-S and nearby power lines.

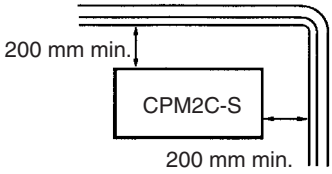

Accessibility

Ensure that the CPM2C-S can be accessed for normal operation and maintenance.

- Provide a clear path to the CPM2C-S for operation and maintenance. High-voltage equipment or power lines could be dangerous if they are in the way during routine operations.

- Separate the CPM2C-S by at least 100 mm from other devices.

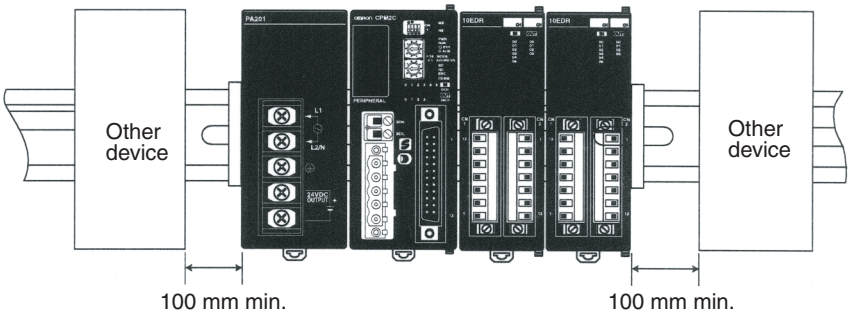

3-3 Installing the CPM2C-S

This section describes how to install the CPM2C-S and connect Expansion Units and Expansion I/O Units. Refer to *Appendix B* for diagrams showing the dimensions of the CPM2C-S CPU Units.

Note Refer to the *CPM2C Programmable Controller Operation Manual* for dimensions of the Expansion I/O Units and Expansion Units.

3-3-1 Connecting Units

Up to 3 Expansion I/O Units and Expansion Units can be connected to a CPM2C-S CPU Unit. Use the following procedure when connecting an Expansion I/O Unit or Expansion Unit.

1,2,3... 1. Remove the cover from the CPU Unit's or the last Expansion I/O Unit's or Expansion Unit's expansion I/O connector. If the cover is difficult to remove, use a flat-blade screwdriver to pry the cover from the expansion I/O connector.

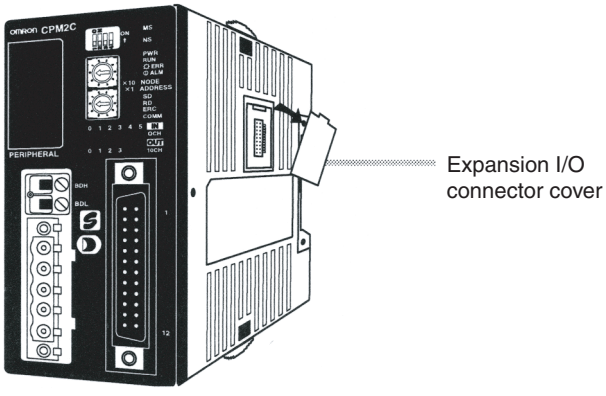

2. Align the Unit and CPU Unit (or previous Expansion I/O Unit or Expansion Unit) so that the catches (top and bottom) on the connectors fit together. Press the Units together to connect them.

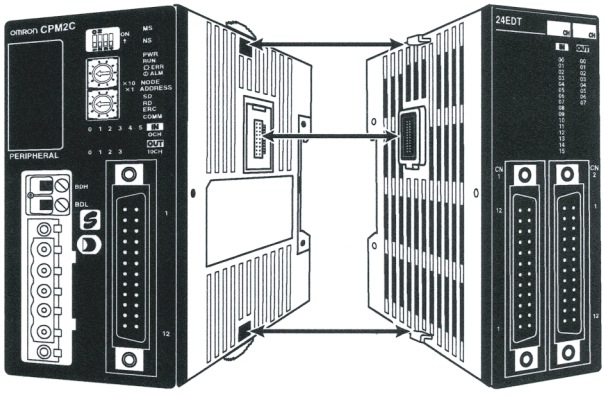

3. Lock the Units together by closing the locks (top and bottom) on the CPU Unit (or previous Expansion I/O Unit or Expansion Unit). Place the cover (included with the CPU Unit) on the last Unit's expansion I/O connector.

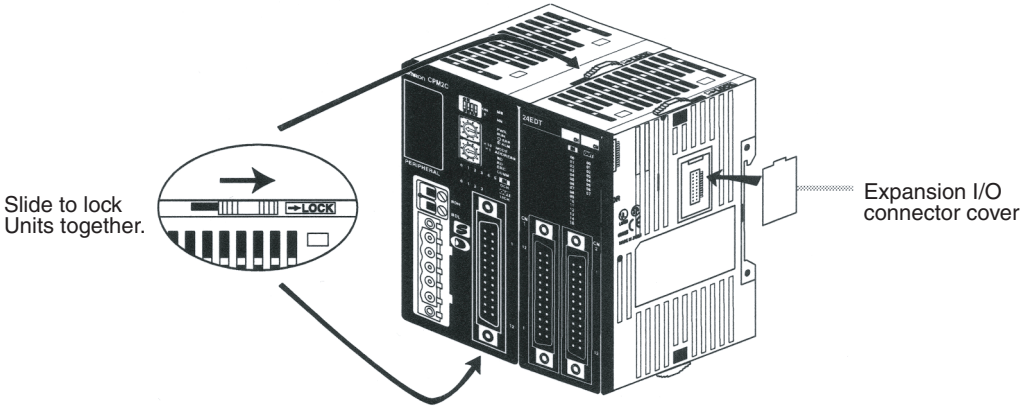

3-3-2 CPM2C-S Installation

The CPM2C-S can be installed on a 35-mm DIN track.

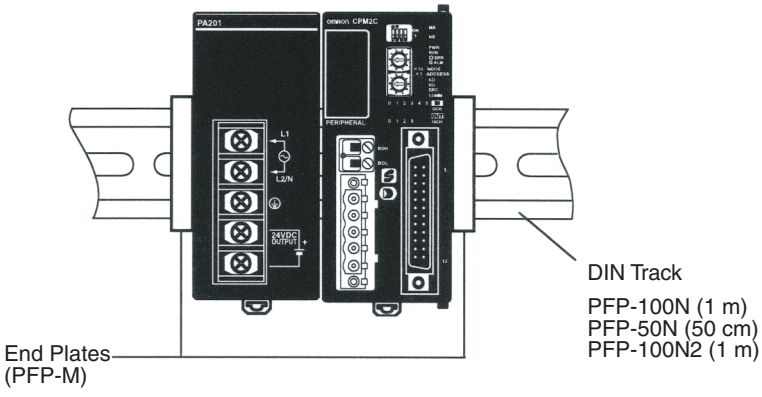

Installation

Lower the CPM2C-S so that the notch on the back of the PC catches the top of the DIN Track. Push the PC forward until the lock snaps into place.

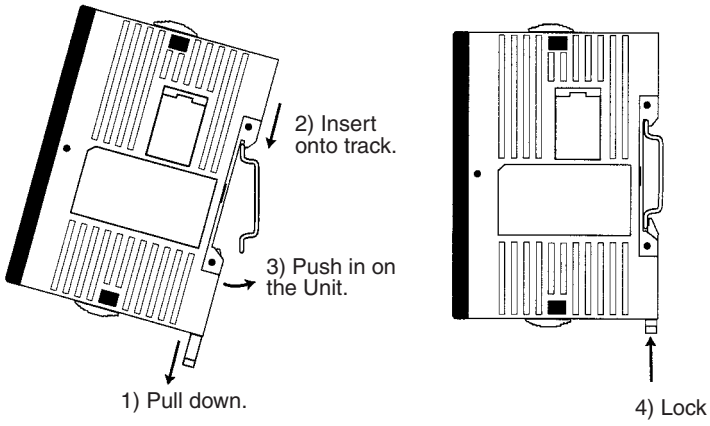

⚠ **Caution** Be sure that the DIN Track is installed horizontally. Installing the Track vertically will inhibit the airflow that cools the CPM2C-S and could cause overheating.

Removal

Pry the lock down with a flat-blade screwdriver and pivot the PC upward to remove it.

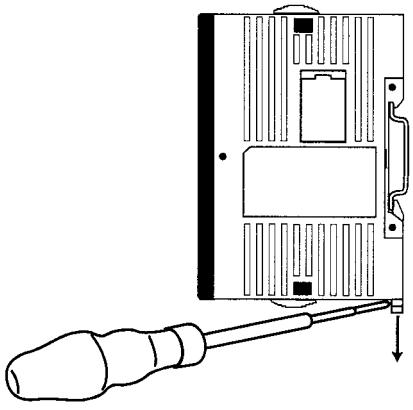

3-4 Wiring and Connections

This section provides basic information on wiring the CPU Unit and Power Supply Unit, and on connecting Programming Devices.

3-4-1 General Precautions for Wiring

⚠ **Caution** Leave the protective label in place while wiring. The Unit may malfunction if strands of wire get inside the Unit. After completing wiring be sure to remove the label to avoid overheating.

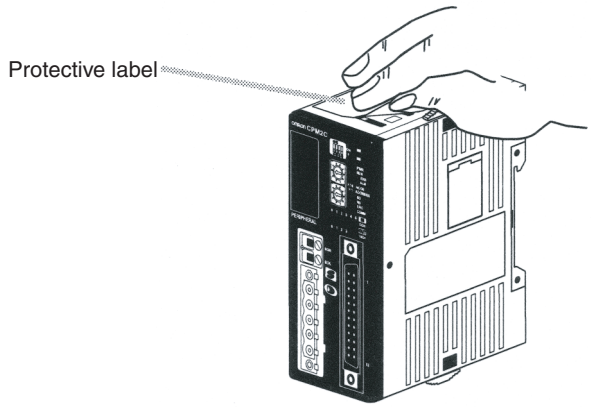

I/O Line Noise

Do not run CPM2C-S I/O lines in the same duct or conduit as power lines.

⚠ **Caution** If flat cables are connected for more than one CompoBus/S network, interference between the flat cables can cause unstable operation. If you are using more than one network, be sure the flat cables are separated by at least 5 mm.

Hanging Ducts

Leave at least 300 mm between the power cables and the I/O or control wiring, as shown in the following diagram.

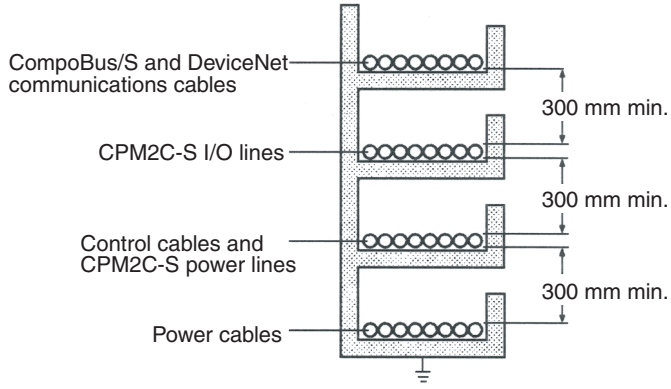

Floor Ducts

Leave at least 200 mm between the wiring and the top of the duct, as shown in the following diagram.

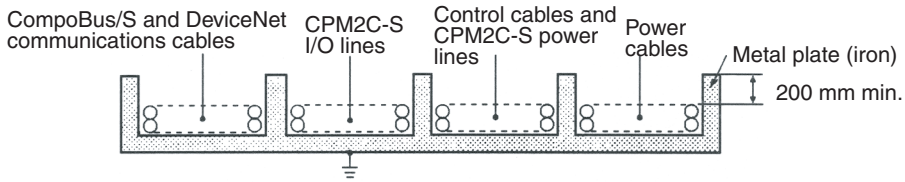

Conduits

Separate the CPM2C-S I/O lines, power and control lines, and power cables, as shown in the following diagram.

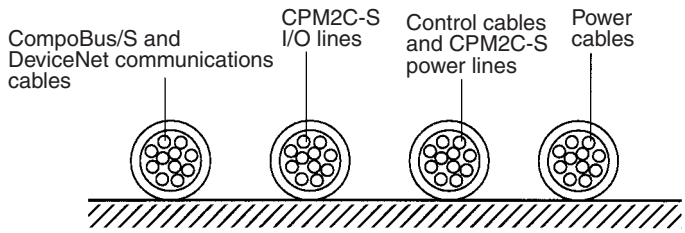

3-4-2 Power Supply Wiring

The following procedure explains how to connect the CPU Unit to the AC Power Supply Unit (CPM2C-PA201) with the power supply connector (included) to provide a 24-VDC power supply.

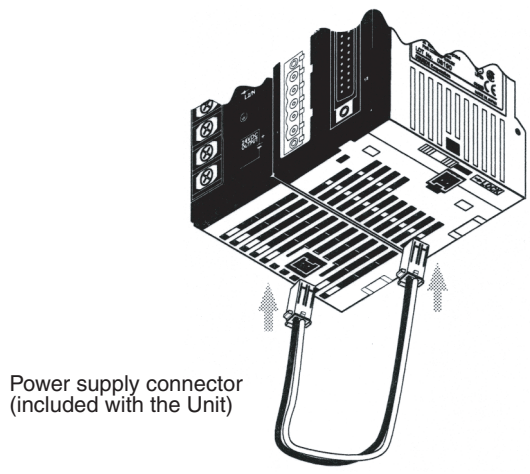

1,2,3... 1. Align the power supply connector with the socket on the bottom of the CPM2C-S and insert the connector.

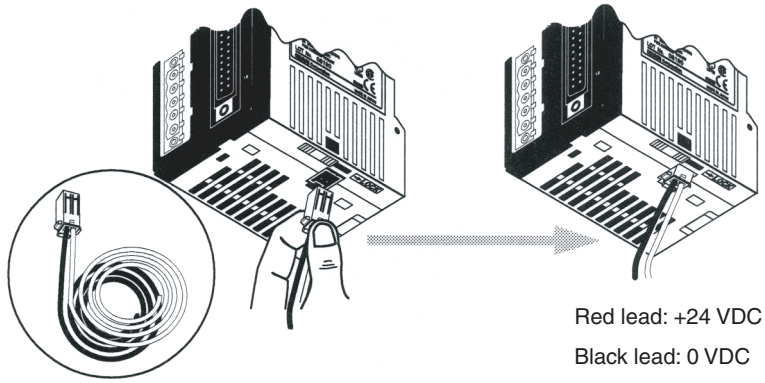

2. To remove the power supply connector, grasp the power supply connector (not the wires), release the lock tab on the connector, and remove the connector.

Note

1. The CPM2C-PA201 is the recommended Power Supply Unit, but a general-purpose power supply such as a S82J-series or S82K-series Power Supply can also be used. When using other power supplies, be sure to use a DC power supply with sufficient capacity and low ripple.
2. Do not perform a voltage withstand test on the DC power supply terminals on the CPU Unit. The test might damage the PC's internal components.
3. When the equipment must conform to the EC Directives (Low-voltage Directives), use a power supply with double insulation or reinforced insulation.

3-4-3 Using the AC Power Supply Unit

Crimp Terminals

Use round crimp terminals for wiring AC power supply to the AC Power Supply Unit (CPM2C-PA201). Use either crimp terminals or solid wires for wiring to the ground terminal or the service power supply terminals. Do not connect bare stranded wires directly to terminals.

- Use M3.5 terminal screws.
- Tighten the terminal screws securely to a torque of 0.74 to 0.9 N·m.

Use round terminals of the dimensions shown below.

Round Terminal

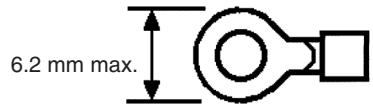

Recommended wire diameter when using solid wires: 0.6 to 1.6 mm (AWG 22 to 14).

Grounding

To prevent electric shock resulting from malfunction due to factors such as noise, connect to a ground of 100 Ω or less. When grounding, use a wire at least 1.25 mm^2 thick.

⚠ **WARNING** Connect the ground terminal of the Power Supply Unit to a ground of 100 Ω or less when installing the Unit. Not connecting to a ground of 100 Ω or less may result in electric shock.

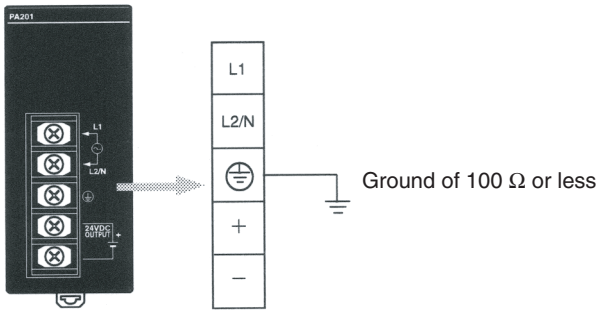

Power Supply Wiring

- To prevent voltage drops caused by startup currents and inrush currents from other devices, wire the power supply circuits of the CPM2C-S separately from power line circuits.
- When using several CPM2C-S PCs together, it is recommended that circuits are wired separately in order to prevent circuit-breaker malfunctions and voltage drops due to inrush current.
- Twist power supply lines to prevent noise from the power supply lines. Noise can further be prevented by wiring via a 1:1 isolation transformer.
- Use wires at least 1.25 mm^2 thick in order to allow for voltage drops and to keep the current within the allowable level.

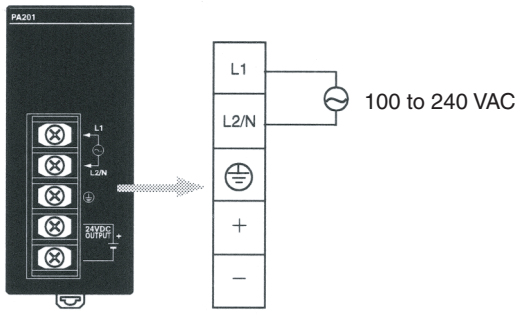

⚠ **WARNING** Tighten the screws on the terminal block of the AC Power Supply Unit to a torque of 0.74 to 0.9 N·m. Loose screws may result in burning or malfunction.

The 24-VDC service power supply terminals on the terminal block can be used for input power supply.

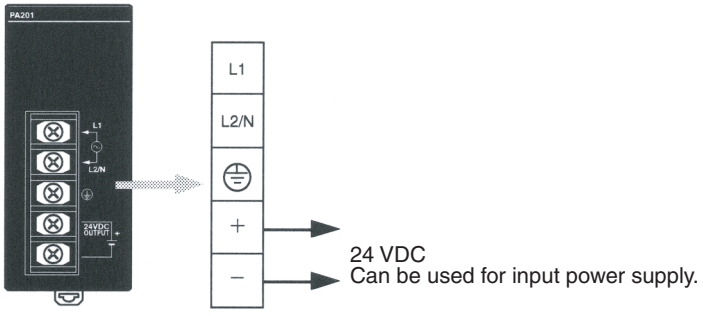

Use the following to obtain the capacity of the service power supply that can be used.

Example: CPU Unit + 3 Expansion I/O Units

Power consumption = 4 W (the CPU Unit's power consumption)
+ 1 W (the Expansion I/O Unit's power consumption)
× 3 (No. of Expansion I/O Units) = 7 W
Service power supply current = (14.4 W (CPM2C-PA201's rated capacity)
– 7 W (power consumption)) ÷ 24 (V) = 308 (mA)

⚠ **WARNING** If the 24-VDC output (either the service power supply or the power supply to the CPU Unit) is overloaded, or is short-circuited, the voltage will drop, and the output will turn OFF. Take external countermeasures to ensure the safety of the system in such an event. Failure to do so may result in a serious accident.

⚠ **WARNING** Do not connect a power supply to the service power supply terminals. If an AC power supply is mistakenly connected to these terminals, the internal circuitry will be damaged.

3-4-4 Removing and Wiring I/O Connectors

The following tables provide specifications of compatible I/O connectors.

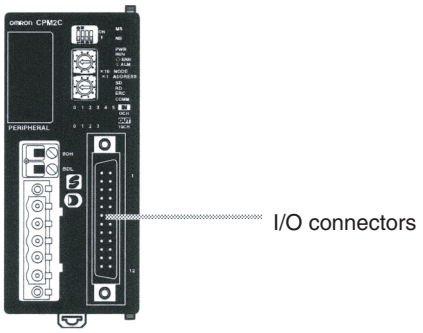

Compatible Connector Specifications (OMRON)

Connector		Specifications	Model number
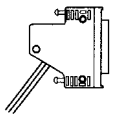	24-pin soldered connector and cover	Connector: Fujitsu FCN-361J024-AU equivalent Cover: Fujitsu FCN-360C024-J2 equivalent	C500-CE241
	24-pin crimp connector and cover	Housing: Fujitsu FCN-363J024 equivalent Contacts: Fujitsu FCN-363J-AU equivalent Cover: Fujitsu FCN-360C024-J2 equivalent	C500-CE242
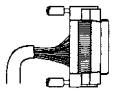	24-pin pressure connector	Connector: Fujitsu FCN-367J024-AU/F equivalent	C500-CE243

Connector Specifications (Fujitsu)

Item		Specifications	Model number
Soldered jack		24-pin gold-plated terminals	FCN-361J024-AU
Crimp connector	Crimp jack housing	24-pin	FCN-363J024
	Crimp contacts	For wire gauges 24 AWG to 28 AWG	FCN-363J-AU
	Hand crimp tool	---	FCN-363T-T005/H
	Contact removal tool	---	FCN-360T-T001/H

Item			Specifications	Model number
Pressure connector	Pressure jack with closed end cover		24-pin gold-plated terminals	FCN-367J024-AU/F
			24-pin silver-plated terminals	FCN-367J024-AG/F
	Pressure jack with open end cover		24-pin gold-plated terminals	FCN-367J024-AU/H
			24-pin silver-plated terminals	FCN-367J024-AG/H
	Pressing tools	Hand press	General purpose	FCN-707T-T101/H
		Cable cutter	General purpose	FCN-707T-T001/H
		Locator plate	For the 360-series connectors	FCN-367T-T012/H
Connector cover (Not compatible with the closed-end cover pressure jack.)			Thin slanted cover for 24-pin connector	FCN-360C024-J2
			With slotted screws for 24-pin connector (Can be turned by hand.)	FCN-360C024E
			With Phillips-head screws for 24-pin connector	FCN-360C024B
			With intermediate Phillips-head screws for 24-pin connector	FCN-360C024C

Connecting I/O Connectors (Pressure Connectors)

Use the following procedure when connecting a pressure connector.

1,2,3...

1. Align the connector and insert it into the Unit.

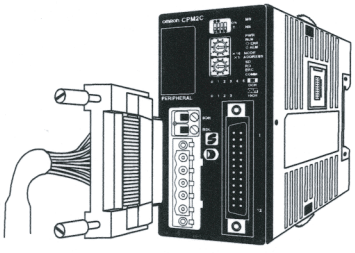

2. Use a flat-blade screwdriver to tighten the connector's fastening screws.

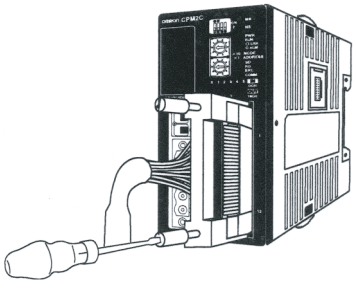

Flat-blade screwdriver

Connecting I/O Connectors (Soldered Connectors)

Use the following procedure when connecting a soldered connector.

1,2,3... 1. Align the connector and insert it into the Unit.

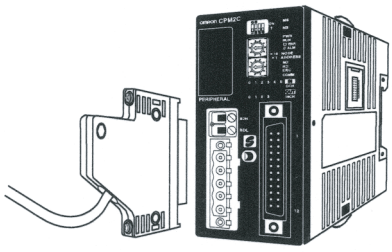

2. Use a Phillips screwdriver to tighten the connector's fastening screws.

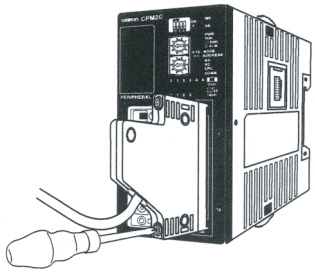

Phillips screwdriver

Assembling Soldered Connectors

Use the following procedure when wiring and assembling a soldered connector (OMRON C500-CE241).

1,2,3... 1. Slide heat-shrink tubing over the power supply wires and solder the wires to the appropriate pins on the socket.

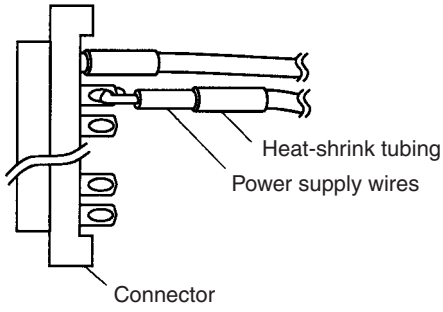

2. After soldering all of the pins, slide the heat-shrink tubing over the soldered power supply pins and shrink the tubing by heating it with a heat gun.

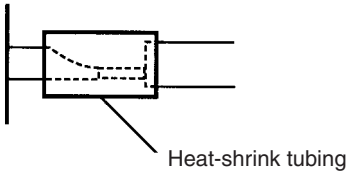

3. Assemble the socket and connector as shown in the following diagram.

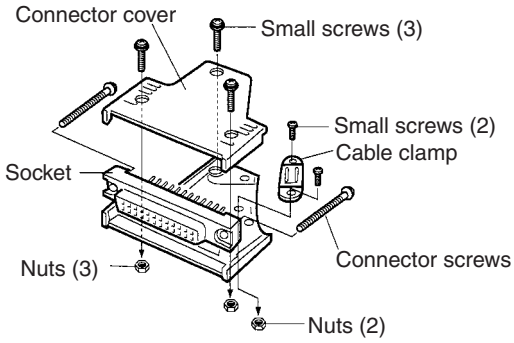

3-4-5 Using Terminal Blocks

We recommend using the following Terminal Blocks to wire devices to the CPM2C-S' I/O connector. Refer to *3-4-6 Connecting I/O Devices* for details on I/O wiring.

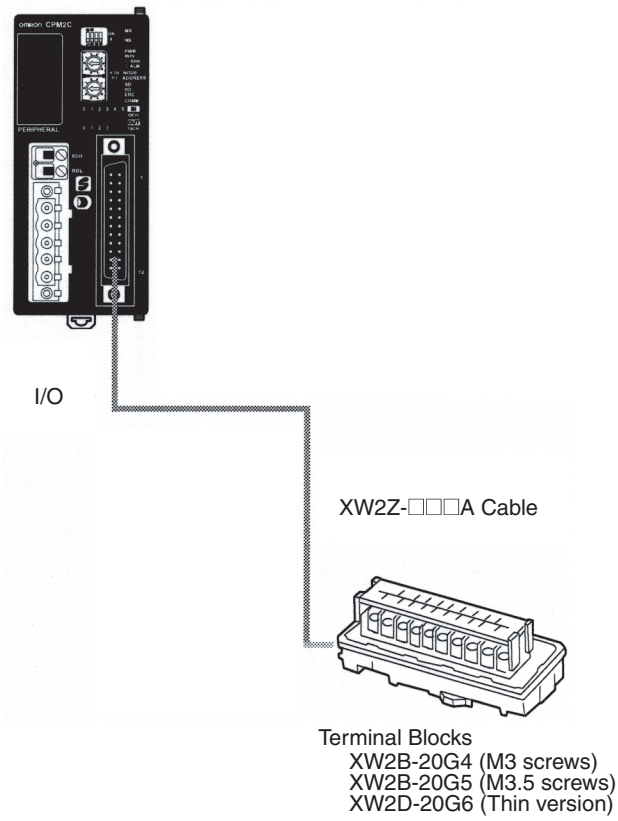

Note The allowable current for the XW2Z-□□□A is 1 A. Do not allow the current on the common terminal to exceed 1 A.

3-4-6 Connecting I/O Devices

Wire inputs and outputs to the CPM2C-S' CPU Unit as shown in the following diagrams.

⚠ **WARNING** The PC outputs may remain ON or OFF due to deposits on or burning of the output relays or destruction of the output transistors. External safety measures must be provided to ensure safety in the system. Not providing proper safety measures may result in serious accidents.

Note When equipment must conform to the EC Directives (Low-voltage Directives), use a power supply with double insulation or reinforced insulation.

⚠ **Caution** Check that wiring has been performed correctly before supplying power. Supplying power with incorrect wiring may result in damage to internal circuits.

I/O Configuration

The following diagrams show the I/O configurations.

CPM2C-S100C and CPM2C-S100C-DRT (Sinking Transistor Outputs)

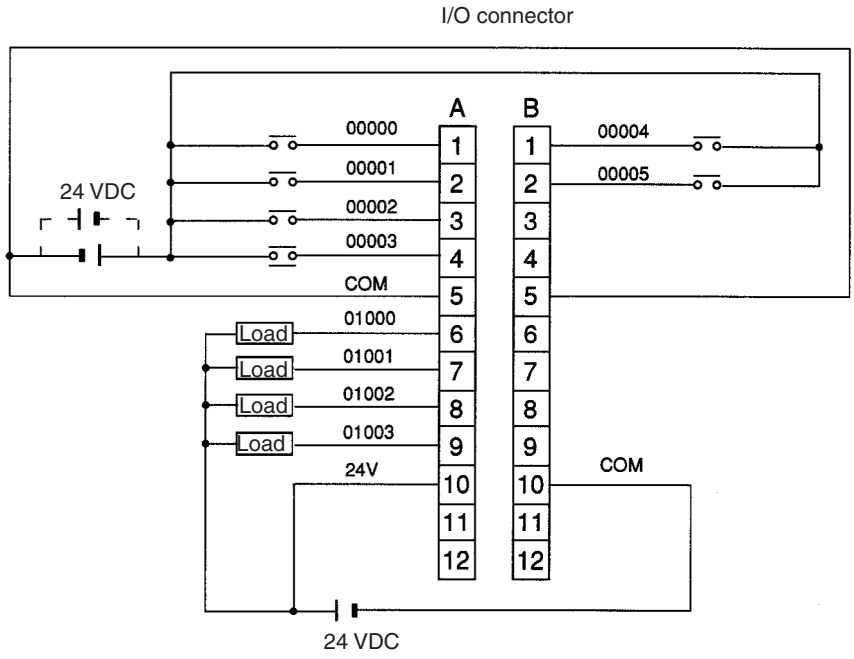

Don't exceed the output capacity or the maximum common current for transistor outputs shown in the following table.

Item	Specification
Output capacity	300 mA at 24 VDC
Maximum common current capacity	1.2 A/common

CPM2C-S110C and CPM2C-S110C-DRT (Sourcing Transistor Outputs)

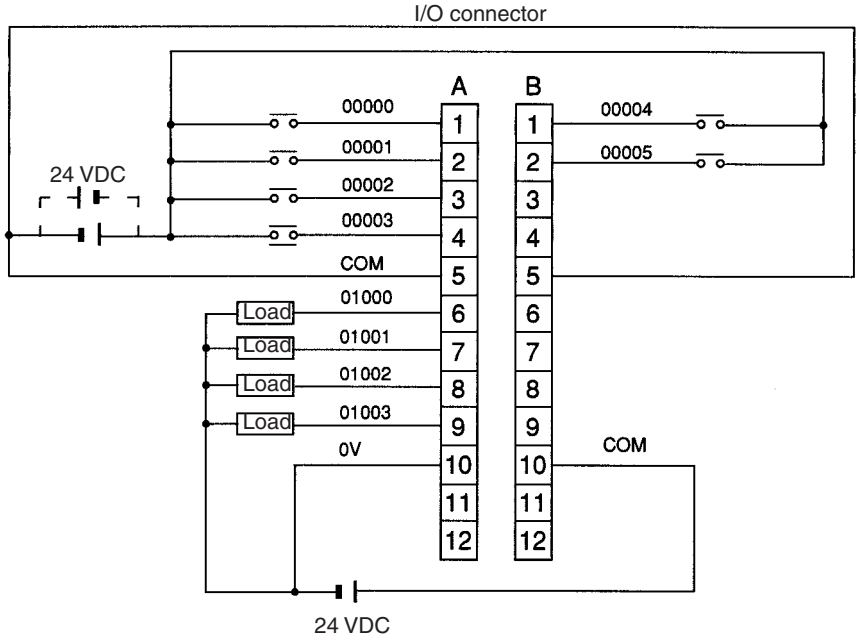

Don't exceed the output capacity or the maximum common current for transistor outputs shown in the following table.

Item	Specification
Output capacity	300 mA at 24 VDC
Maximum common current capacity	1.2 A/common

Wiring the CPM2C-S to an Input Terminal

Wire the inputs as shown in the following diagram when using an Input Terminal. Use an XW2B-20G4 or XW2B-20G5 Terminal Block and an XW2Z-□□□A Connecting Cable.

Sinking

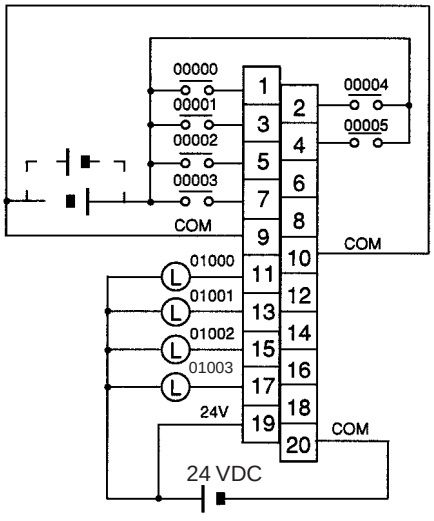

Sourcing

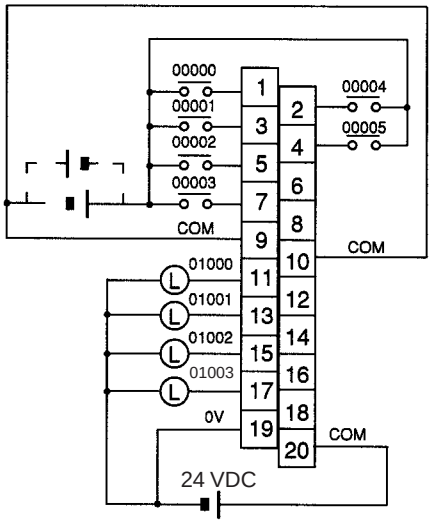

Input Devices The following table shows how to connect various input devices.

Device	Circuit diagram
Relay output	5 mA/6 mA/8 mA; IN; COM (+); CPM2C-S
NPN open collector	+; Sensor power supply; Output; 5 mA/6 mA/8 mA; 0 V; IN; COM (+); CPM2C-S
NPN current output	Use the same power supply for the input and sensor.; Constant current circuit; Output; 5 mA/6 mA/8 mA; 0 V; +; IN; COM (+); CPM2C-S
PNP current output	+; Sensor power supply; 5 mA/6 mA/8 mA; Output; 0 V; IN; COM (–); CPM2C-S
Voltage output	+; Output; 0 V; Sensor power supply; COM (+); IN; CPM2C-S

Note Do **not** use the following wiring with voltage-output devices:

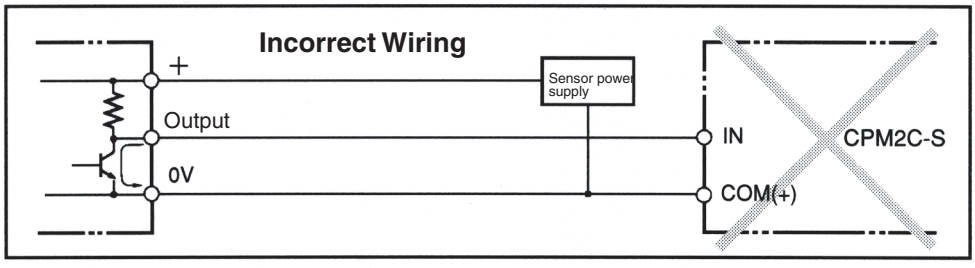

High-speed Counter Inputs

Using IR 00000 to IR 00002 as High-speed Counter Inputs

In these examples, Encoders with an external 24-VDC open-collector output are connected.

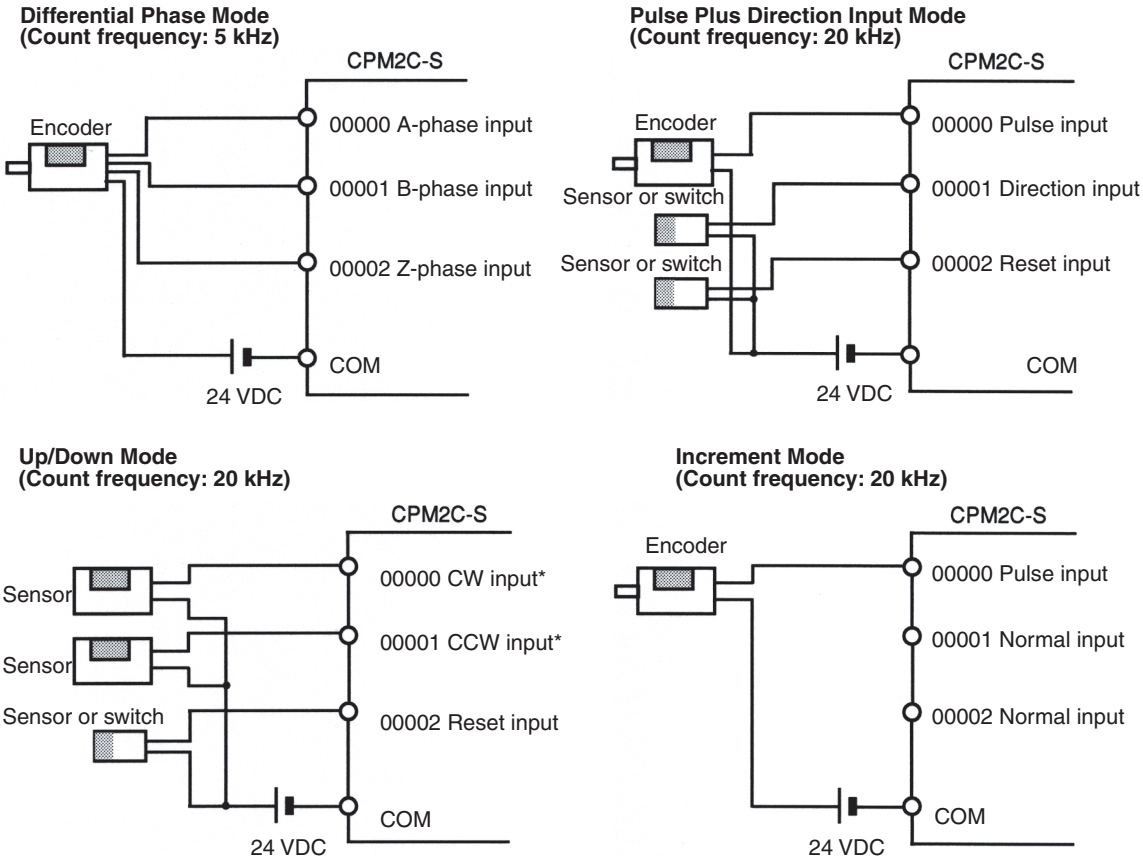

Note *CW is clockwise and CCW is counter-clockwise.

Using IR 00003 to IR 00006 as Interrupt Inputs (Counter Mode)

In these examples, an Encoder with an external 24-VDC open-collector output is connected.

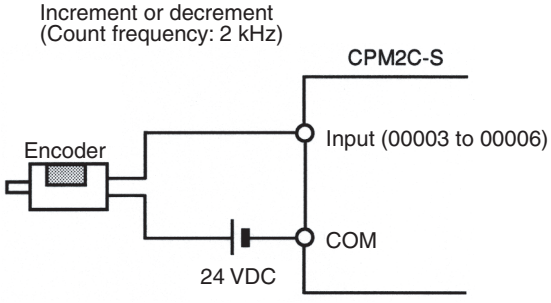

PC Setup Settings

The input bits shown in the following tables can operate as normal inputs or they can be assigned special functions in the PC Setup.

Special functions for input bits IR 00000 through IR 00002 are set in DM 6642:

Bit address	PC Setup setting (DM 6642 bits 08 to15)		
	00	01	02, 03, or 04
IR 00000	Used as normal inputs.	Used as high-speed counter inputs.	Used as inputs for synchronized pulse control.
IR 00001			
IR 00002			Used as a normal input.

Special functions for input bits IR 00003 through IR 00006 are set in DM 6628:

Bit address	Bits in DM 6628	PC Setup setting (in DM 6628)		
		0 (Hex)	1 (Hex)	2 (Hex)
IR 00003	00 to 03	Used as normal inputs.	Used as interrupt inputs (including counter mode).	Used as quick-response inputs.
IR 00004	04 to 07			

High-speed Counter Input Connection Examples

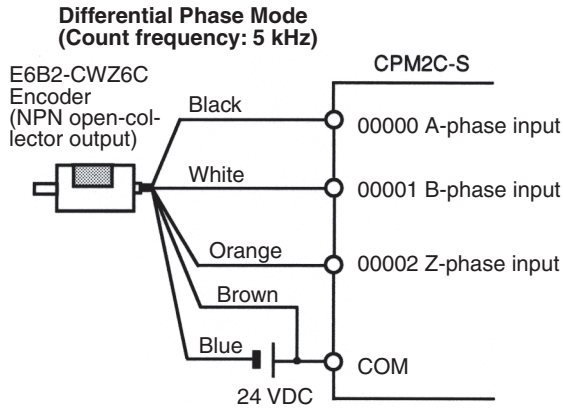

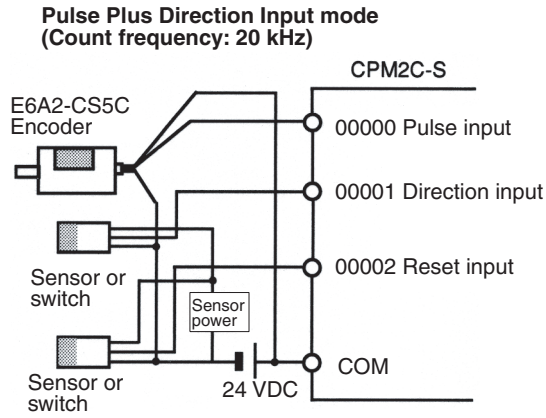

Leakage Current

A leakage current can cause false inputs when using 2-wire sensors (proximity switches or photoelectric switches) or limit switches with LEDs. False inputs won't occur if the leakage current is less than 1.0 mA. If the leakage current exceeds these values, insert a bleeder resistor in the circuit to reduce the input impedance, as shown in the following diagram.

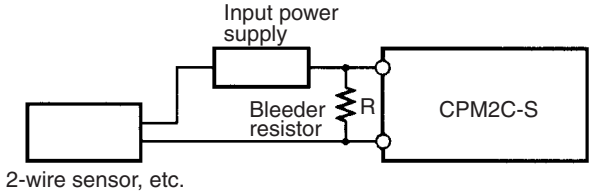

I: Device's leakage current (mA)
R: Bleeder resistance (kΩ)
W: Bleeder resistor's power rating (W)

L_C: CPM2C-S' input impedance (kΩ)
I_C: CPM2C-S' input current (mA)
E_C: CPM2C-S' OFF voltage (V) = 5.0 V

$$R = \frac{L_C \times 5.0}{I \times L_C - 5.0}\ \text{k}\Omega\ \text{max.} \qquad W = \frac{2.3}{R}\ \text{W min.}$$

The equations above were derived from the following equations:

$$I \times \frac{R \times \dfrac{\text{Input voltage (24)}}{\text{Input current } (I_C)}}{R + \dfrac{\text{Input voltage (24)}}{\text{Input current } (I_C)}} \leq \text{OFF voltage } (E_C : 5.0)$$

$$W \geq \frac{\text{Input voltage (24)}}{R} \times \text{Input voltage} \times \text{tolerance (4)}$$

Refer to *2-1-3 I/O Specifications* for details on the values L_C, I_C, and E_C.
The input impedance, input current, and OFF voltage may vary depending on the input being used. (IN00000 through IN00002 have different values.)

Inductive Loads

When connecting an inductive load to an input, connect a diode in parallel with the load. The diode should satisfy the following requirements:

1,2,3...

1. Peak reverse-breakdown voltage must be at least 3 times the load voltage.
2. Average rectified current must be 1 A.

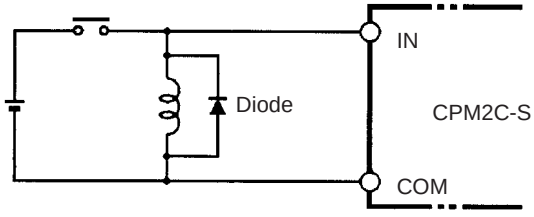

Using Pulse Outputs

The following diagrams show example applications of sink-type transistor outputs using output bits IR 01000 and IR 01001. Use the PULS(65), SPED(—), ACC(—), PWM(—), and SYNC(—) instructions to produce pulse outputs (rather than normal outputs) from output bits IR 01000 and IR 01001.

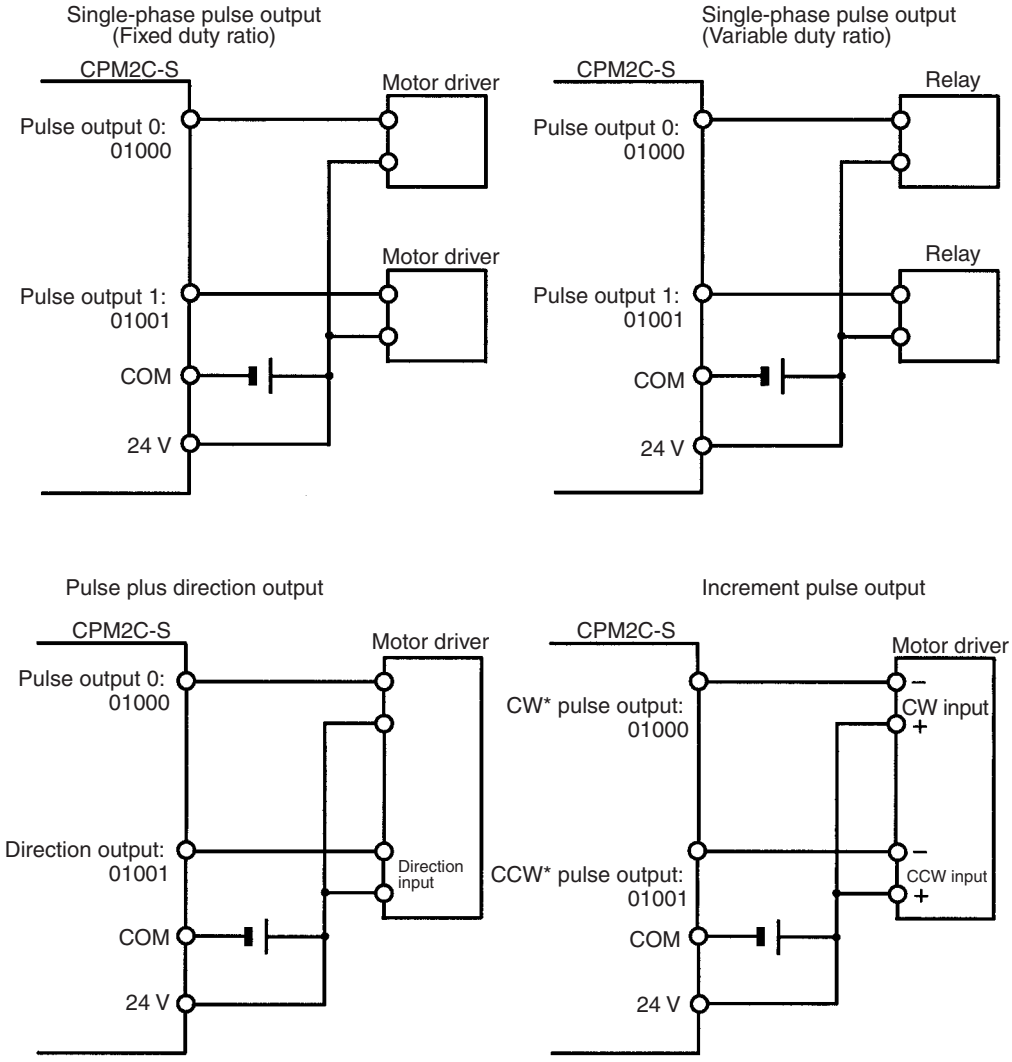

Note *CW is clockwise and CCW is counter-clockwise.

Output Wiring Precautions

Observe the following precautions to protect the PC's internal components.

Output Short Protection

The output or internal circuitry might be damaged when the load connected to an output is short-circuited, so it is recommended to install a protective fuse in each output circuit.

Inductive Loads

When connecting an inductive load to an input, connect a surge protector or diode in parallel with the load.

The surge protector's components should have the following ratings:

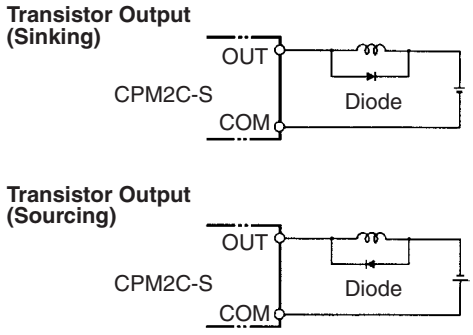

The diode should satisfy the following requirements:

Peak reverse-breakdown voltage must be at least 3 times the load voltage.
Average rectified current must be 1 A.

Inrush Current Considerations

When a CPM2C-S transistor output is used to switch a load with a high inrush current such as an incandescent lamp, suppress the inrush current as shown below.

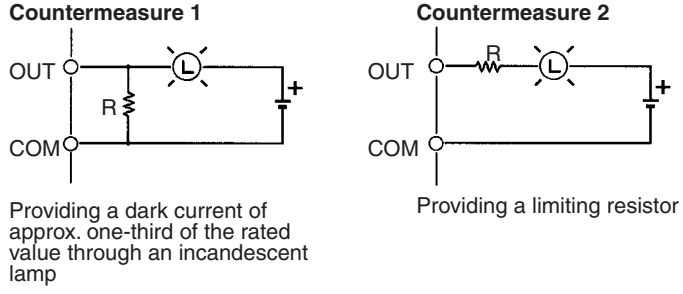

Fuse Insertion

The CPM2C-S with transistor output may burn if the load is short-circuited, therefore, insert a protective fuse in series to the load.

3-4-7 Wiring CompoBus/S Transmission Lines

Use special flat cable or VCTF cable for the transmission lines that connect the nodes in the CompoBus/S I/O Link. (Special flat cables, 2-core VCTF cables, and 4-core VCTF cables cannot be used in the same system. Use only one type of cable in the same system.)

Name	Model number	Specifications
Special Flat cable	SCA1-4F10	Special flat cable, 0.75 $mm^2 \times 4$ cores
VCTF cable	---	VCTF cable according to JIS C3306, 0.75 $mm^2 \times 2$ cores or 0.75 $mm^2 \times 4$ cores

Use the following procedure to wire the CompoBus/S communications cables.

1,2,3... 1. Strip off the length of wire insulation recommended for the crimp connectors being used and tightly twist the bare wire strands together.

Note When VCTF cable is being used, cover the end of the cable sheathing with electrical tape or heat-shrink tubing as shown in the following diagram.

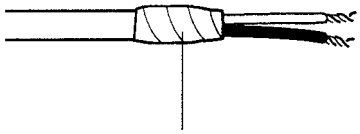

Secure the cable sheathing with electrical tape or heat-shrink tubing.

2. Crimp pin terminals on the stripped ends of the communications cable and secure the terminal and wire with electrical tape or heat-shrink tubing.

   Note a) We recommend the following pin terminals.

Weidmüller 046290 Sleeve Signal wire

   b) We recommend the following crimper:
   Weidmüller PZ1.5 Crimper (part number 900599)

   c) The Weidmüller 901851 Sleeve cannot be used.

3. Insert the pin terminals into the CompoBus/S terminal block on the front of the CPM2C-S and tighten the locking screw.

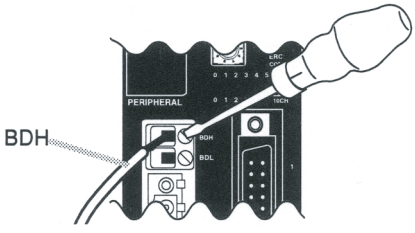

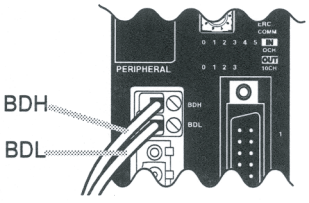

Maximum Transmission Line Length

The maximum lengths of the trunk line, branch lines, and total transmission line length depend on the communications mode and the kind of transmission line (flat cable or VCTF cable) being used. The maximum lengths are further restricted if flat cable is being used with more than 16 Slaves.

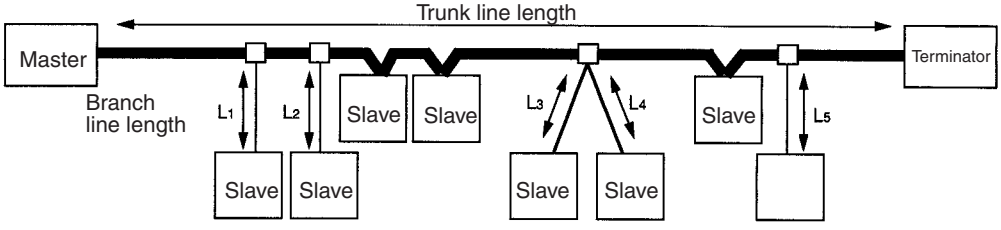

Total branch line length = $L_1 + L_2 + L_3 + L_4 + L_5$

Item	Max. length in high-speed mode			Max. length in long-distance mode	
	2-core VCTF cable	Flat cable or 4-core VCTF cable		2-core VCTF cable	Flat cable or 4-core VCTF cable
		Up to 16 Slaves	17 to 32 Slaves		
Trunk line length	100 m max.	100 m max.	30 m max.	500 m max.	Free branching Total wire length: 200 m max.
Branch line length	3 m max.	3 m max.	3 m max.	6 m max.	
Total branch line length	50 m max.	50 m max.	30 m max.	120 m max.	

3-4-8 Wiring DeviceNet Communications Cables

Wire the DeviceNet communications cables as shown in the following diagram.

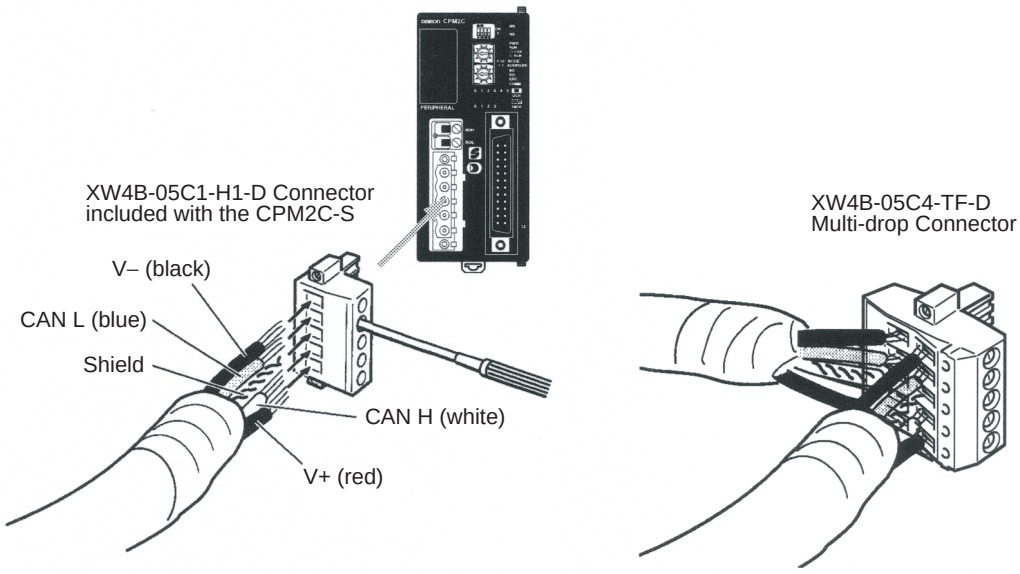

DeviceNet Connectors

Use the DeviceNet connectors shown in the following table.

Connector	Appearance
OMRON XW4B-05C1-H1-D Connector with securing screws (included with the CPM2C-S)	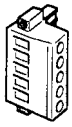
OMRON XW4B-05C4-TF-D Connector for multi-drop connections (see note 1)	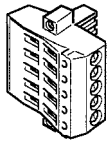

Note

1. Use the XW4B-05C4-T1-D Connector when wiring multi-drop connections with thick cable.
2. Phoenix Contact connectors can be purchased through OMRON Tsufo Service Company.

Use the following OMRON screwdriver when wiring DeviceNet connectors.

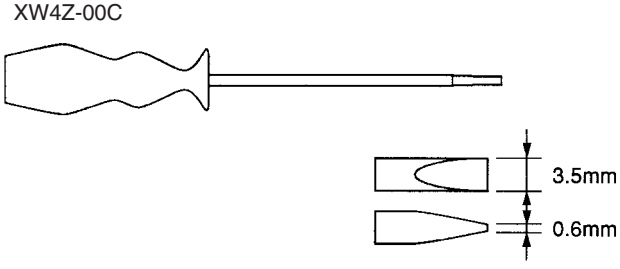

3-4-9 Programming Device Connections

Programming Console

Use one of the connecting cables shown in the following diagram to connect a Programming Console to the CPM2C-S.

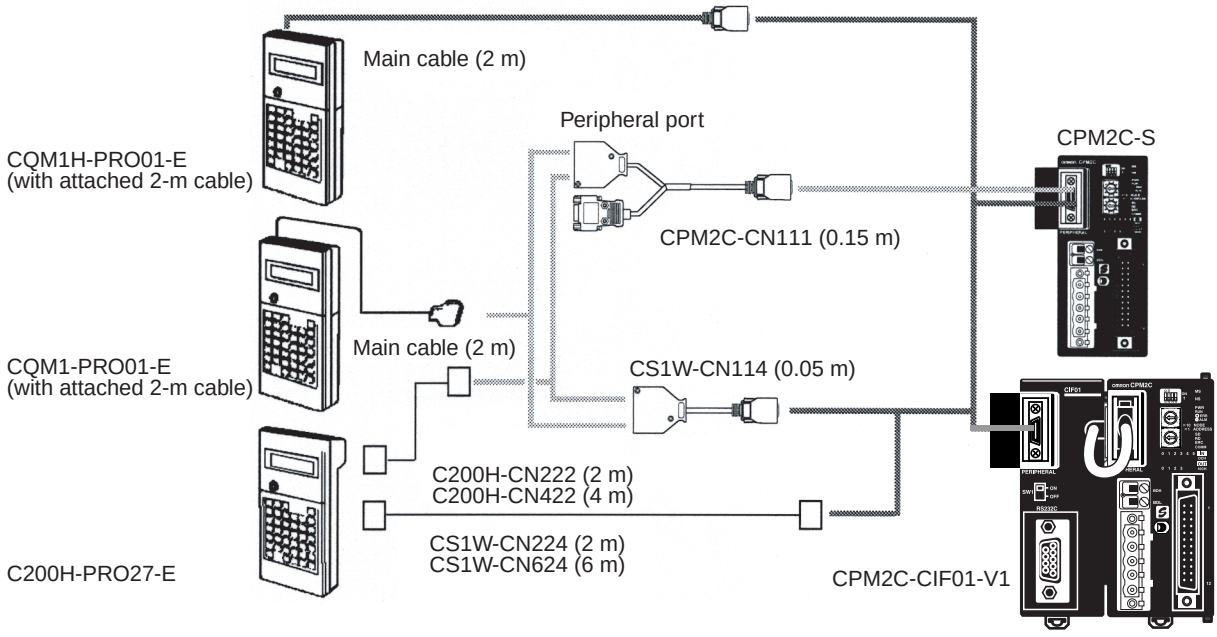

One-to-one Computer Connection

Use one of the connecting cables shown in the following diagram to connect a personal computer with Support Software to the CPM2C-S' RS-232C port for 1:1 Host Link communications or no-protocol (serial) communications.

RS-232C Port Connection

A personal computer can be connected to the CPU Unit's RS-232C port with an XW2Z-□00S or XW2Z-□00S-V Connecting Cable. The XW2Z-□00S Cables have a D-sub 25-pin connector and the XW2Z-□00S-V Cables have a D-sub 9-pin connector.

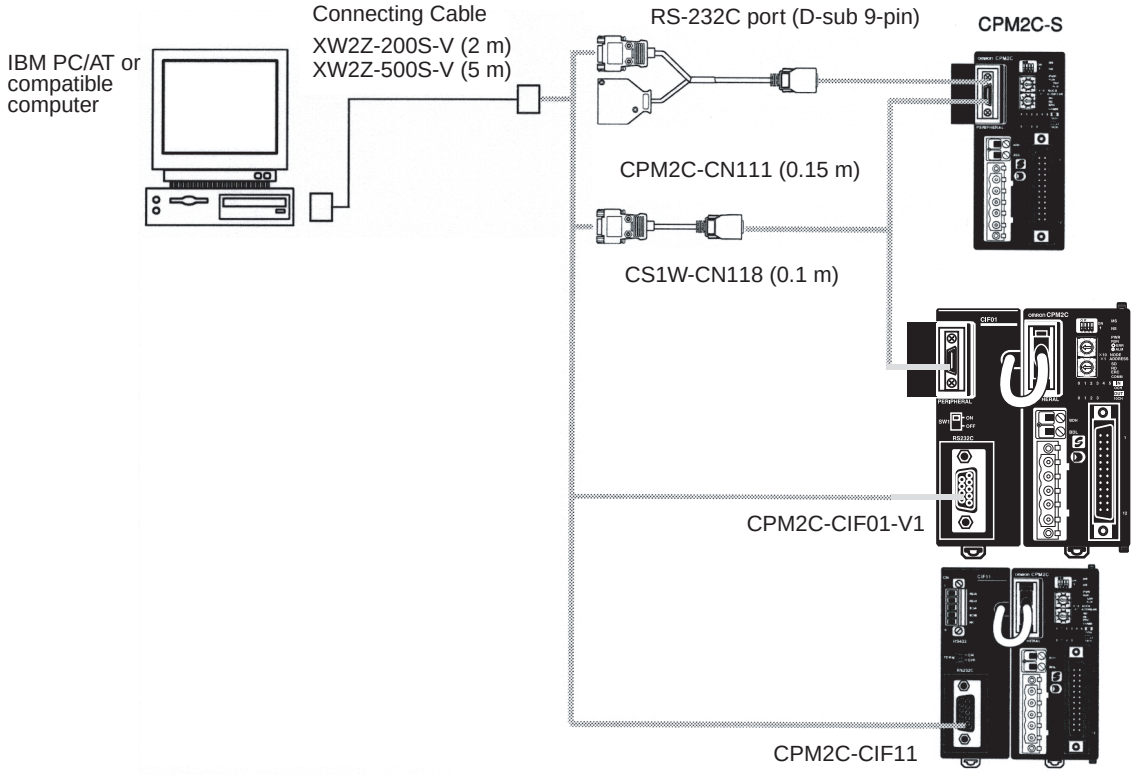

Peripheral Port Connection

A personal computer can be connected to the CPU Unit's communications port through a CQM1-CIF02 RS-232C Adapter. The CQM1-CIF02 RS-232C Adapter has a 9-pin connector.

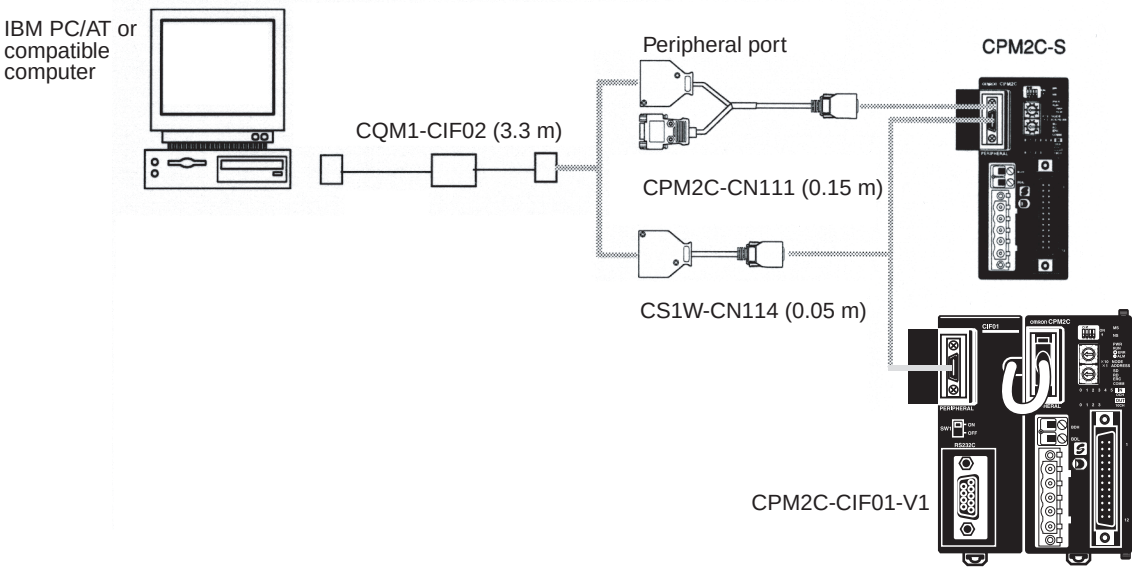

Note

1. The CS1W-CN226/626 Connecting Cables can be used, but the CS1W-CN225/625 and CS1W-CN227/627 Connecting Cables cannot be used.
2. The CQM1-CIF11 Connecting Cable cannot be used. (If one is connected, the CPM2C-S will not recognize it; the PC will enter RUN mode at startup if pin 4 of the DIP switch is ON and the PC Setup (DM 6600) is set so that the Programming Console's mode switch controls the startup mode.)
3. Refer to *SECTION 8 Using Programming Devices* for details on the Support Software that can be used with the CPM2C-S.

One-to-N Host Link Connection

Up to 32 OMRON PCs, including CPM2C-S PCs, can be connected to a host computer.

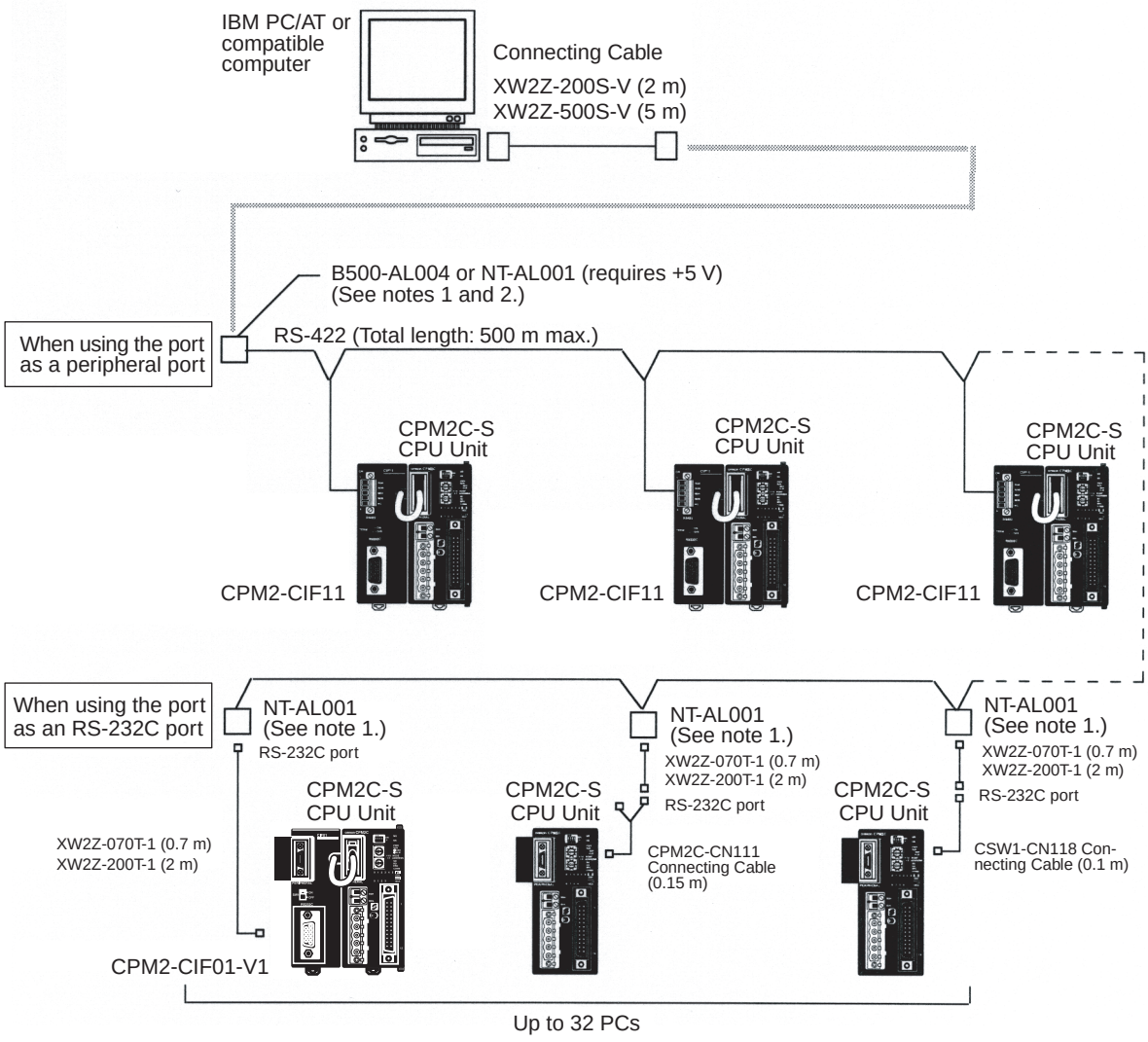

Note

1. The NT-AL001 must be supplied externally with 5 VDC. When an NT-AL001 is connected to a CPM2C-S PC, pin 6 of the CPM2C-S' RS-232C port supplies +5 VDC and an external power supply is not necessary.
2. The B500-AL004 requires an external AC power supply (110 VAC or 220 VAC).
3. Be sure that the power supply requirements of the CPU Unit, Expansion Units, and Expansion I/O Units do not exceed the available capacity. Also, take into account the power consumption of the NT-AL001 Adapter when an NT-AL001 Adapter is connected to the RS-232C port.

3-4-10 No-Protocol Communications

The TXD(48) and RXD(47) instructions can be used in no-protocol mode to exchange data with standard serial devices such as bar code readers and serial printers. For example, data can be received from a bar code reader or transmitted to a serial printer.

The serial devices can be connected to the communications port as a RS-232C port or peripheral port, just like a one-to-one computer connection. See *One-to-one Computer Connections* on page 78 for diagrams showing the possible serial connections.

3-4-11 OMRON PT Connections

In a 1:1 NT Link, a CPM2C-S can be connected directly to a Programmable Terminal. The direct connection with a Programmable Terminal is possible by using the communications as a RS-232C port only (not as a peripheral port).

A Programmable Terminal can also be connected by a Host Link connection. Either the RS-232C port or peripheral port connection can be used for the Host Link.

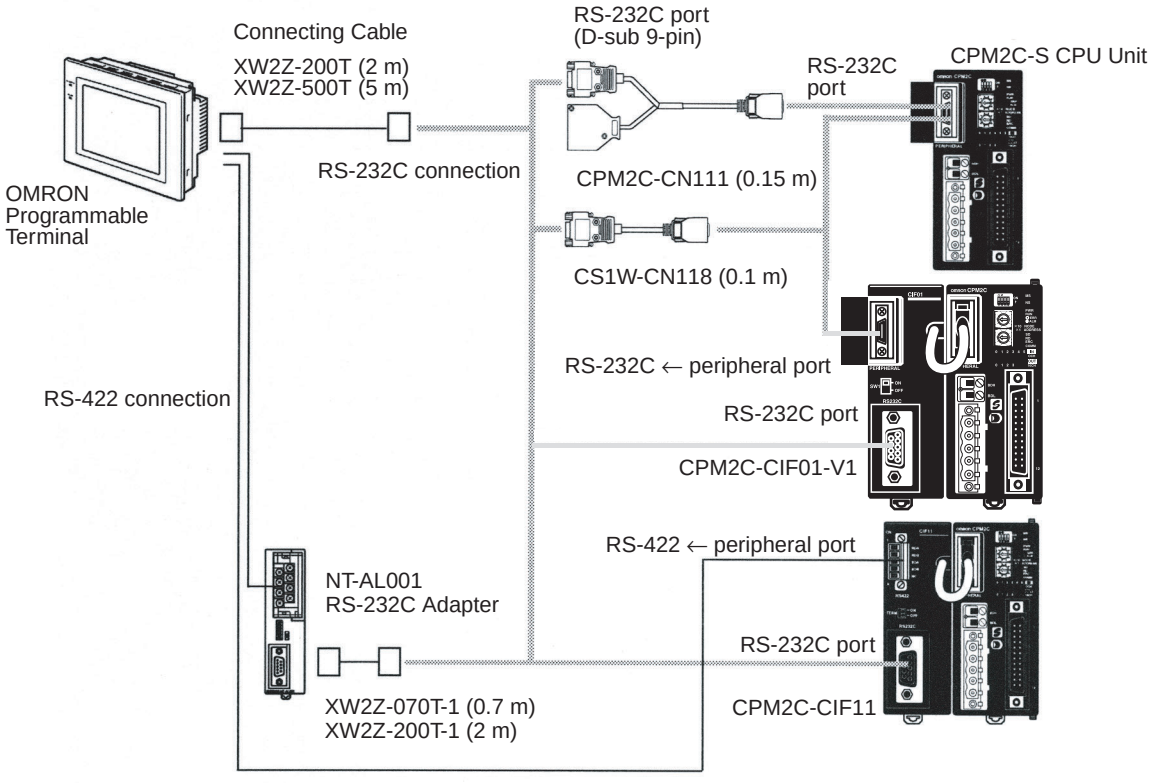

Note The Programmable Terminal cannot be connected using a peripheral port connection when communicating via an NT Link.

3-4-12 One-to-one PC Link Connections

A CPM2C-S can be linked to another CPM2C-S, a CQM1H, CQM1, CPM1, CPM1A, CPM2A, CPM2C, SRM1(-V2), C200HS, or C200HX/HG/HE PC. The PC must be connected using the communications port as an RS-232C port (not as a peripheral port).

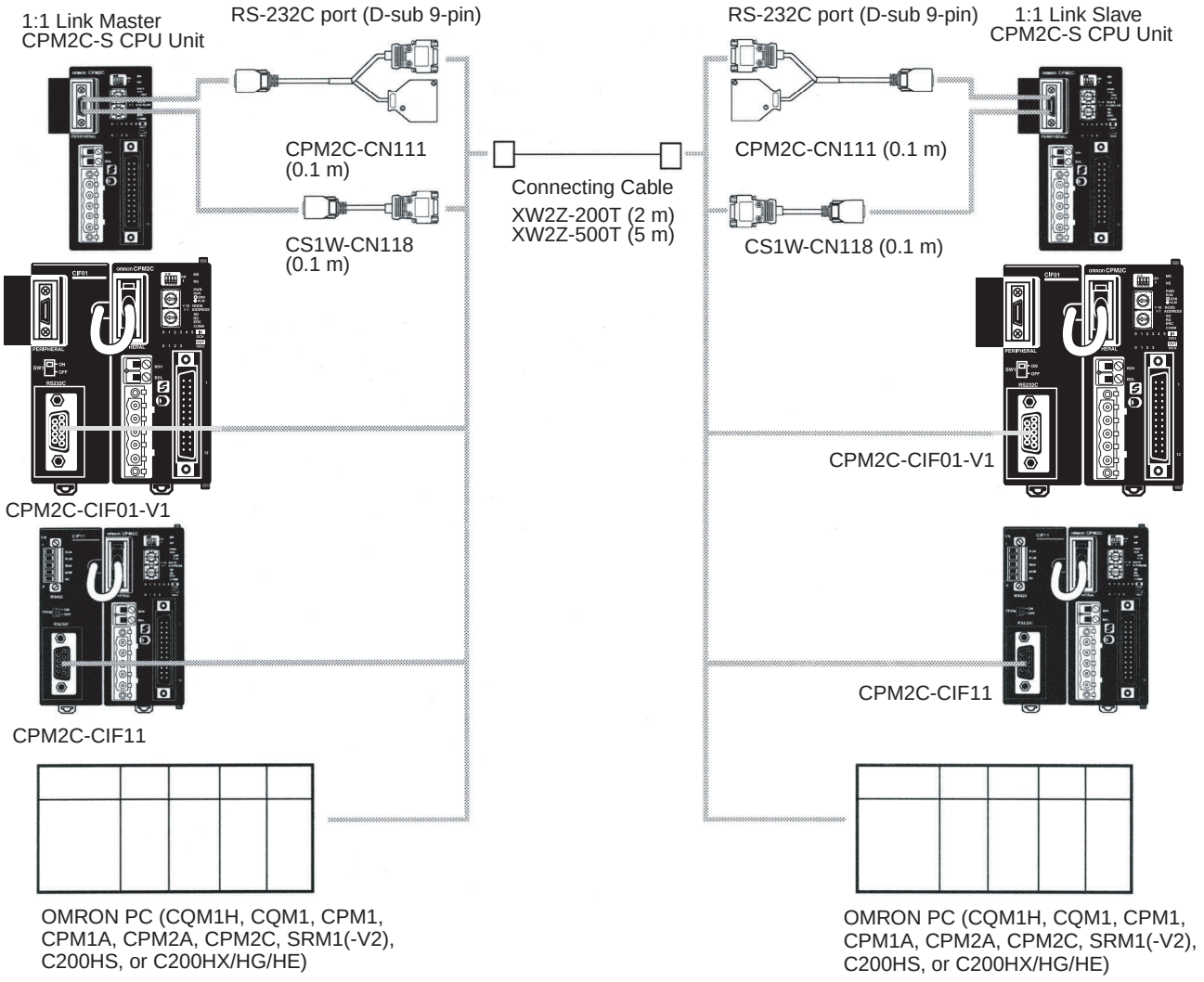

Note Even though the peripheral port on the CPM2C-CIF01 can output RS-232C, this port cannot be used for one-to-one link communications.

SECTION 4
Memory Areas

This section describes the structure of the CPM2C-S' memory areas and explains how to use them.

4-1 Allocation of Word and Bit Addresses 84
4-1-1 Functions 85
4-1-2 I/O Memory Area Attributes 88
4-2 I/O Allocation for CPM2C-S PCs 89
4-2-1 CPU Units 89
4-2-2 Expansion I/O Units and Expansion Units 89
4-2-3 I/O Allocation Examples 90
4-3 I/O Allocation to CompoBus/S Slaves 91
4-4 SR Area 92
4-5 AR Area 95
4-6 PC Setup 99
4-6-1 Overview 99
4-6-2 PC Setup Settings 100
4-7 Basic PC Operation and I/O Processes 105
4-7-1 Startup Mode 105
4-7-2 Hold Bit Status 106
4-7-3 Program Memory Write-protection 106
4-7-4 RS-232C Port Servicing Time 107
4-7-5 Peripheral Port Servicing Time 107
4-7-6 Cycle Monitor Time 107
4-7-7 Minimum Cycle Time 108
4-7-8 Input Time Constants 108
4-7-9 Error Log Settings 109
4-8 Error Log 110

4-1 Allocation of Word and Bit Addresses

Except for the TR area and DM area, data in the PC's I/O memory can be specified by bit addresses or word addresses. The TR area can be accessed only by bit addresses and the DM area can be accessed only by word addresses.

The following diagram shows how to specify I/O bits.

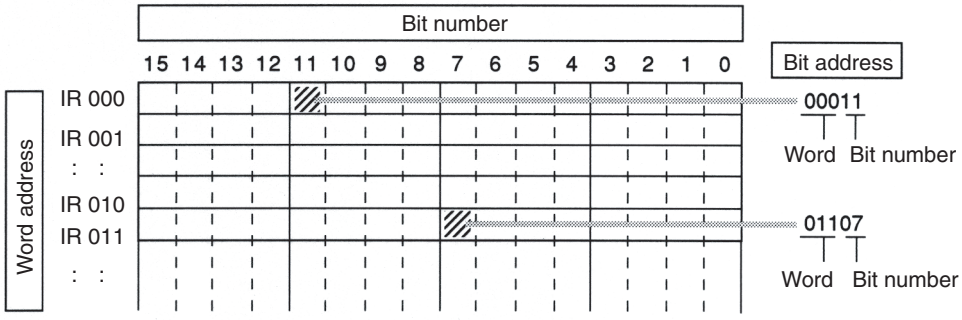

The following memory areas can be used in the CPM2C-S.

Data area		Words	Bits	Function
IR area	Input area	IR 000 to IR 009 (10 words)	IR 00000 to IR 00915 (160 bits)	These bits are allocated to the external I/O terminals.
	Output area	IR 010 to IR 019 (10 words)	IR 01000 to IR 01915 (160 bits)	(Words not used as I/O words can be used as work words.)
	CompoBus/S input area	IR 020 to IR 027 (8 words)	IR 02000 to IR 02715 (128 bits)	These bits are allocated to CompoBus/S Slaves.
	CompoBus/S output area	IR 030 to IR 037 (8 words)	IR 03000 to IR 03715 (128 bits)	(Words not used as I/O words can be used as work words.)
	Work area	IR 028 and IR 029, IR 038 to IR 049, IR 200 to IR 227 (42 words)	IR 02800 to IR 02915, IR 03800 to IR 04915, IR 20000 to IR 22715 (672 bits)	Work bits can be freely used within the program.
SR area		SR 228 to SR 255 (28 words)	SR 22800 to SR 25515 (448 bits)	These bits serve specific functions such as flags and control bits.
TR area		---	TR 0 to TR 7 (8 bits)	These bits are used to temporarily store ON/OFF status at program branches.
HR area[1]		HR 00 to HR 19 (20 words)	HR 0000 to HR 1915 (320 bits)	These bits store data and retain their ON/OFF status when power is turned OFF, or operation starts or stops. They are used in the same way as work bits.
AR area[1]		AR 00 to AR 23 (24 words)	AR 0000 to AR 2315 (384 bits)	These bits serve specific functions such as flags and control bits.
LR area		LR 00 to LR 15 (16 words)	LR 0000 to LR 1515 (256 bits)	Used for a 1:1 PC Link with another PC.
Timer/Counter area[1]		TC 000 to TC 255 (timer/counter numbers)[2]		Timers and counters use the TIM, TIMH(15), CNT, CNTR(12), TMHH(—), and TIML(—) instructions. The same numbers are used for both timers and counters.

Data area		Words	Bits	Function
DM area	Read/write[1]	DM 0000 to DM 1999 DM 2022 to DM 2047 (2,026 words)	---	DM area data can be accessed in word units only. Word values are retained when the power is turned off, or operation started or stopped. Read/write areas can be read and written freely within the program.
	Error log	DM 2000 to DM 2021 (22 words)	---	Used to store the time of occurrence and error code of errors that occur. These words can be used as ordinary read/write DM when the error log function isn't being used.
	Read-only[3,4]	DM 6144 to DM 6599 (456 words)	---	Cannot be overwritten from program.
	PC Setup[3,4]	DM 6600 to DM 6655 (56 words)	---	Used to store various parameters that control PC operation.

Note

1. The contents of the HR area, AR area, Counter area, and read/write DM area are backed up by the CPU Unit's battery. If the battery is removed or fails, the contents of these areas will be lost and returned to default values.
2. When a TC numbers is used as a word operand, the timer or counter PV is accessed; when used as a bit operand, its Completion Flag is accessed.
3. Data in DM 6144 to DM 6655 cannot be overwritten from the program, but they can be changed from a Programming Device.
4. The program and data in DM 6144 to DM 6655 are stored in flash memory.

4-1-1 Functions

IR Area

The functions of the IR area are explained below.

IR area bits from IR 00000 to IR 01915 are allocated to terminals on the CPU Unit and Expansion I/O Units. IR words that are not allocated to inputs or outputs can be used as work words. Input words begin with IR 000 and output words begin with IR 010.

Note

1. The input bits shown in the following tables can operate as normal inputs or they can be assigned special functions in the PC Setup.

   Special functions for input bits IR 00000 through IR 00002 are set in DM 6642:

Bit address	PC Setup setting (DM 6642 bits 08 to15)		
	00	01	02, 03, or 04
IR 00000	Used as normal inputs.	Used as high-speed counter inputs.	Used as inputs for synchronized pulse control.
IR 00001			
IR 00002			Used as a normal input.

   Special functions for input bits IR 00003 and IR 00004 are set in DM 6628:

Bit address	Bits in DM 6628	PC Setup setting (in DM 6628)		
		0	1	2
IR 00003	00 to 03	Used as normal inputs.	Used as interrupt inputs (including counter mode).	Used as quick-response inputs.
IR 00004	04 to 07			

2. Output bits IR 01000 and IR 01001 can operate as normal inputs or they can be used for pulse outputs with PULS(65), SYNC(—), or PWM(—). (Use a CPU Unit with transistor outputs for the pulse output functions.)

Instruction	Function
PULS(65)	With SPED(64): Single-phase pulse output without acceleration or deceleration
	With ACC(—): Single-phase pulse output with trapezoidal acceleration and deceleration
SYNC(—)	Synchronized pulse control output
PWM(—)	Variable duty-ratio pulse output

CompoBus/S I/O Areas

IR area bits from IR 02000 to IR 02715 (the input area) and IR 03000 to IR 03715 (the output area) are allocated to CompoBus/S Slaves. IR words that are not allocated to CompoBus/S inputs or outputs can be used as work words.

Work Bits

The work bits can be used freely within the program. They can only be used within the program, however, and not for direct external I/O.

SR Area

These bits mainly serve as flags to PC operation or contain present and set values for various functions. Words SR 253 to SR 255 are read-only. For details on the various bit functions, refer to *4-4 SR Area*.

TR Area

When a complex ladder diagram cannot be programmed in mnemonic code just as it is, these bits are used to temporarily store ON/OFF execution conditions at program branches. They are used only for mnemonic code. When programming directly with ladder diagrams using the SYSMAC Support Software (SSS) or the SYSMAC-CPT Support Software, TR bits are automatically processed for you.

The same TR bits cannot be used more than once within the same instruction block, but can be used again in different instruction blocks. The ON/OFF status of TR bits cannot be monitored from a Programming Device.

Examples showing the use of TR bits in programming are provided in the *CPM1/CPM1A/CPM2A/CPM2C/SRM1(-V2) Programming Manual* (W353).

HR Area

These bits retain their ON/OFF status even after the PC power supply has been turned off or when operation begins or stops. They are used in the same way as work bits.

AR Area

These bits mainly serve as flags related to PC operation. These bits retain their status even after the PC power supply has been turned off or when operation begins or stops. For details on the various bit functions, refer to *4-5 AR Area*.

LR Area

These bits are used to exchange data when the CPM2C-S is linked 1:1 with another CPM2C-S or a CPM1, CPM1A, CPM2A, CPM2C, SRM1(-V2), CQM1, CQM1H, C200HS, or C200HX/HG/HE PC.

Timer/Counter Area

This area is used to manage timers and counters created with TIM, TIMH(15), TMHH(—)*, TIML(—)*, CNT, and CNTR(12). The same numbers are used for both timers and counters and each number can be used only once in the user program. Do not use the same TC number twice even for different instructions.

Use TC numbers 000 through 003 for TIMH(15) and TC numbers 004 to 007 for TMHH(—)*. When these timer numbers are used, timing is performed as an interrupt process and the cycle timer does not affect timer operation.

TC numbers are used to create timers and counters, as well as to access Completion Flags and present values (PVs). If a TC number is designated for

word data, it will access the present value (PV); if it is used for bit data, it will access the Completion Flag for the timer/counter.

DM Area

DM area data is accessed in word units only. The contents of the DM area are retained even after the PC power supply has been turned off or when operation begins or stops.

DM words DM 0000 through DM 1999 and DM 2022 through DM 2047 can be used freely in the program; other DM words are allocated specific functions, described below.

DM 2000 through DM 2021 contain the error log information. Refer to *Section 9 Troubleshooting* for details on the error log.

Note DM 6600 through DM 6655 contain the PC Setup. Refer to *4-6 PC Setup* for details.

4-1-2 I/O Memory Area Attributes

Area	External I/O allocation	Mode change (to or from PROGRAM)		Fatal error				Startup (Power ON)				Force Set, Force Reset
				FALS(07)		Other cause		Reset IOM Hold Bit[1]		Maintain IOM Hold Bit[1]		
		IOM Hold Bit OFF	IOM Hold Bit ON	IOM Hold Bit OFF	IOM Hold Bit ON	IOM Hold Bit OFF	IOM Hold Bit ON	IOM Hold Bit OFF	IOM Hold Bit ON	IOM Hold Bit OFF	IOM Hold Bit ON	
Input area (IR 000 to IR 009)	Yes	Clear	Hold	Hold	Hold	Clear	Hold	Clear	Clear	Clear	Hold	OK
Output area (IR 010 to IR 019)	Yes	Clear	Hold	Hold	Hold	Clear	Hold	Clear	Clear	Clear	Hold	OK
CompoBus/S input area (IR 020 to IR 027)	No	Clear	Hold	Hold	Hold	Clear	Hold	Clear	Clear	Clear	Hold	OK
CompoBus/S output area (IR 030 to IR 037)	No	Clear	Hold	Hold	Hold	Clear	Hold	Clear	Clear	Clear	Hold	OK
Work areas (IR 028, IR 029, IR 030 to IR 049, IR 220 to IR 227)	No	Clear	Hold	Hold	Hold	Clear	Hold	Clear	Clear	Clear	Hold	OK
SR area (SR 228 to SR 255)	No											
HR area (HR 00 to HR 19)	No	Hold	Hold	Hold	Hold	Hold	Hold	Hold	Hold	Hold	Hold	OK
AR area (AR 00 to AR 23)	No											OK
LR area (LR 00 to LR 15)	No	Clear	Hold	Hold	Hold	Clear	Hold	Clear	Clear	Clear	Hold	OK
Timer Completion Flags (T000 to T255)	No	Hold[2]	Hold[2]	Hold	Hold	Hold	Hold	Hold	Hold	Hold	Hold	OK
Timer PVs (T000 to T255)	No	Hold[2]	Hold[2]	Hold	Hold	Hold	Hold	Hold	Hold	Hold	Hold	No
Counter Completion Flags (C000 to C255)	No	Hold	Hold	Hold	Hold	Hold	Hold	Hold	Hold	Hold	Hold	OK
Counter PVs (C000 to C255)	No	Hold	Hold	Hold	Hold	Hold	Hold	Hold	Hold	Hold	Hold	No
DM area	No	Hold	Hold	Hold	Hold	Hold	Hold	Hold	Hold	Hold	Hold	No
Read/Write (DM 0000 to DM 1999, DM 2022 to DM 2047)												
Error Log (DM 2000 to DM 2021)												
Read-only (DM 6144 to DM 6599)												
PC Setup (DM 6600 to DM 6655)												

Note

1. The PC Setup setting in DM 6601 bits 08 to 11 determines whether the IOM Hold Bit is reset (turned OFF) at startup.
2. Timer PVs and Completion Flags are maintained when the CPM2C-S is switched to PROGRAM mode from RUN mode or MONITOR mode, but cleared when the CPM2C-S is switched from PROGRAM mode to RUN mode or MONITOR mode.

4-2 I/O Allocation for CPM2C-S PCs

This section shows how I/O bits are actually allocated to the input and output terminals on the CPU Unit and Expansion I/O Units. Bits in the words that are not allocated to I/O can be used as work bits.

4-2-1 CPU Units

Input bits are allocated starting from IR 00000 and output bits are allocated starting from IR 01000. In the following diagram, shaded areas indicate bits actually used for inputs or outputs.

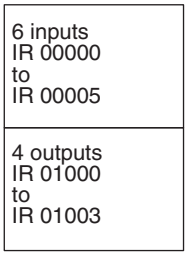

Bits		15	14	13	12	11	10	09	08	07	06	05	04	03	02	01	00
Inputs	IR 000	Do not use															
Outputs	IR 010																

4-2-2 Expansion I/O Units and Expansion Units

Up to 3 Expansion Units or Expansion I/O Units can be connected to a CPM2C-S PC. Input bits and output bits are automatically allocated starting from the CPU Unit and continuing through Expansion Units and Expansion I/O Units in the order in which they are connected. The input area consists of the 10 words from IR 000 to 009, and the output area consists of the 10 words from IR 010 to 019.

No. of I/O	Model number	I/O	Allocated bits	Max. No. of Units
8	CPM2C-8ED□	Input	8 inputs: Word (m+1), bits 00 to 07	3
		Output	---	
16	CPM2C-16ED□	Input	16 inputs: Word (m+1), bits 00 to 15	3
		Output	---	
8	CPM2C-8ER CPM2C-8ET□ CPM2C-8ET1□	Input	---	3
		Output	8 outputs: Word (n+1), bits 00 to 07	
16	CPM2C-16ET□ CPM2C-16ET1□	Input	---	3
		Output	16 outputs: Word (n+1), bits 00 to 15	
10	CPM2C-10EDR	Input	6 inputs: Word (m+1), bits 00 to 05	3
		Output	4 outputs: Word (n+1), bits 00 to 03	
20	CPM2C-20EDR	Input	12 inputs: Word (m+1), bits 00 to 11	3
		Output	8 outputs: Word (n+1), bits 00 to 07	
24	CPM2C-24EDT□ CPM2C-24EDT1□	Input	16 inputs: Word (m+1), bits 00 to 15	3
		Output	8 outputs: Word (n+1), bits 00 to 07	
32	CPM2C-32EDT□ CPM2C-32EDT1□	Input	16 inputs: Word (m+1), bits 00 to 15	3
		Output	16 outputs: Word (n+1), bits 00 to 15	

Note m: “m” denotes the last input word allocated to the CPU Unit, or to the previous Expansion Unit or Expansion I/O Unit if one is already connected.
n: “n” denotes the last output word allocated to the CPU Unit, or to the previous Expansion Unit or Expansion I/O Unit if one is already connected.

4-2-3 I/O Allocation Examples

Example 1

The following examples shows the I/O bits allocated when one 24-point Expansion I/O Unit is connected. Bits IR 00100 to IR 00115 are allocated to the Unit's inputs and bits IR 011 00 to IR 01107 are allocated to the Unit's outputs.

Bits		15	14	13	12	11	10	09	08	07	06	05	04	03	02	01	00
Inputs	IR 000	Do not use															
	IR 001																
Outputs	IR 010																
	IR 011																

Example 2

The following examples shows the I/O bits allocated when an 8-point Input Unit, 24-point Expansion I/O Unit, and 16-point Output Unit are connected. Output bits are not allocated to the Input Unit and input bits are not allocated to the Output Unit.

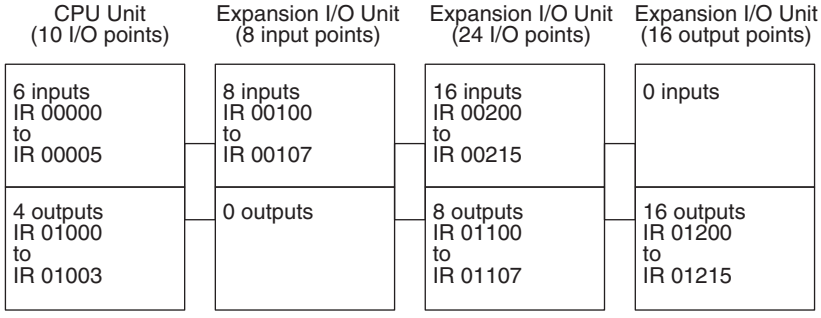

Note Refer to the *CPM2C Programmable Controller Operation Manual* (W356) for more examples showing the bits allocated to Expansion I/O Units.

4-3 I/O Allocation to CompoBus/S Slaves

The CompoBus/S input area (IR 020 to IR 027) and CompoBus/S output area (IR 030 to IR 037) are allocated for the CompoBus/S Terminal's I/O. The following table shows the I/O allocation of the CompoBus/S Terminal (IN0 to IN15 and OUT0 to OUT15.)

I/O	Bit address		
	IR word	Bit number	
		15 14 13 12 11 10 9 8	7 6 5 4 3 2 1 0
Input area	020	IN1	IN0
	021	IN3	IN2
	022	IN5	IN4
	023	IN7	IN6
	024	IN9	IN8
	025	IN11	IN10
	026	IN13	IN12
	027	IN15	IN14
Output area	030	OUT1	OUT0
	031	OUT3	OUT2
	032	OUT5	OUT4
	033	OUT7	OUT6
	034	OUT9	OUT8
	035	OUT11	OUT10
	036	OUT13	OUT12
	037	OUT15	OUT14

Note

1. IN0 to IN15 are node numbers of Input Terminals and OUT0 to OUT15 are node numbers of Output Terminals.
2. When the maximum number of CompoBus/S nodes is set to 16, IN8 to IN15 and OUT8 to OUT15 can be used as work bits.
3. CompoBus/S Terminals with 8 points or less are allocated I/O bits in byte units beginning from bit 00 or bit 08.
4. Only even addresses can be specified for 16-point CompoBus/S Terminals.

4-4 SR Area

These bits mainly serve as flags related to CPM2C-S operation or contain present and set values for various functions. The functions of the SR area are explained in the following table.

Note "Read-only" words and bits can be read as status in controller PC operation, but they cannot be written from the ladder program. Bits and words that are "Not used" are also read-only.

Word(s)	Bit(s)	Function	Read/ write
SR 228, SR 229	00 to 15	**Pulse Output PV 0** Contains the pulse output PV (–16,777,215 to 16,777,215). SR 22915 acts as the sign bit; a negative number is indicated when SR 22915 is ON. (The same PV data can be read immediately with PRV(62).) Only Pulse Output PV 0 is used for ACC(—).	Read-only
SR 230, SR 231	00 to 15	**Pulse Output PV 1** Contains the pulse output PV (–16,777,215 to 16,777,215). SR 23115 acts as the sign bit; a negative number is indicated when SR 23115 is ON. (The same PV data can be read immediately with PRV(62).)	
SR 232 to SR 235	00 to 15	**Macro Function Input Area** Contains the input operands for MCRO(99). (Can be used as work bits when MCRO(99) is not used.)	Read/ write
SR 236 to SR 239	00 to 15	**Macro Function Output Area** Contains the output operands for MCRO(99). (Can be used as work bits when MCRO(99) is not used.)	
SR 240	00 to 15	**Interrupt Input 00003 Counter Mode SV** SV when interrupt input 00003 is used in counter mode (4 digits hexadecimal). (Can be used as work bits when interrupt input 00003 is not used in counter mode.)	
SR 241	00 to 15	**Interrupt Input 00004 Counter Mode SV** SV when interrupt input 00004 is used in counter mode (4 digits hexadecimal). (Can be used as work bits when interrupt input 00004 is not used in counter mode.)	
SR 242, SR 243	00 to 15	Not used.	
SR 244	00 to 15	**Interrupt Input 00003 Counter Mode PV** Counter PV when interrupt input 00003 is used in counter mode (4 digits hexadecimal).	Read-only
SR 245	00 to 15	**Interrupt Input 00004 Counter Mode PV** Counter PV when interrupt input 00004 is used in counter mode (4 digits hexadecimal).	
SR 246, SR 247	00 to 15	Not used.	
SR 248, SR 249	00 to 15	**High-speed Counter PV Area** (Can be used as work bits when the high-speed counter is not used.)	Read-only
SR 250, SR 251	00 to 15	Not used.	

Word(s)	Bit(s)	Function	Read/ write
SR 252	00	**High-speed Counter Reset Bit**	Read/ write
	01 to 03	Not used.	
	04	**Pulse Output 0 PV Reset Bit** Turn ON to clear the PV of pulse output 0.	Read/ write
	05	**Pulse Output 1 PV Reset Bit** Turn ON to clear the PV of pulse output 1.	
	06, 07	Not used.	
	08	**Peripheral Port Reset Bit** Turn ON to reset the peripheral port. Automatically turns OFF when reset is complete.	Read/ write
	09	**RS-232C Port Reset Bit** Turn ON to reset the RS-232C port. Automatically turns OFF when reset is complete.	
	10	**PC Setup Reset Bit** Turn ON to initialize PC Setup (DM 6600 through DM 6655). Automatically turns OFF again when reset is complete. Only effective if the PC is in PROGRAM mode.	
	11	**Forced Status Hold Bit** (See note.) OFF: The forced status of bits that are forced set/reset is cleared when switching between PROGRAM mode and MONITOR mode. ON: The status of bits that are forced set/reset are maintained when switching between PROGRAM mode and MONITOR mode. The PC Setup can be set to maintain the status of this bit when the PC is turned off.	
	12	**I/O Hold Bit** (See note.) OFF: IR and LR bits are reset when starting or stopping operation. ON: IR and LR bit status is maintained when starting or stopping operation. The PC Setup can be set to maintain the status of this bit when the PC is turned off.	
	13	Not used.	
	14	**Error Log Reset Bit** Turn ON to clear error log. Automatically turns OFF again when operation is complete.	Read/ write
	15	Not used.	

Word(s)	Bit(s)	Function	Read/ write
SR 253	00 to 07	**FAL Error Code** The error code (a 2-digit number) is stored here when an error occurs. The FAL number is stored here when FAL(06) or FALS(07) is executed. This word is reset (to 00) by executing a FAL 00 instruction or by clearing the error from a Programming Device.	Read-only
	08	**Battery Error Flag** Turns ON when the CPU Unit backup battery's voltage is too low.	
	09	**Cycle Time Overrun Flag** Turns ON when a cycle time overrun occurs (i.e., when the cycle time exceeds 100 ms).	
	10,11	Not used.	
	12	**Changing RS-232C Setup Flag** Turns ON when the RS-232C port's settings are being changed.	Read/ write
	13	**Always ON Flag**	Read-only
	14	**Always OFF Flag**	
	15	**First Cycle Flag** Turns ON for 1 cycle at the start of operation.	
SR 254	00	1-minute clock pulse (30 seconds ON; 30 seconds OFF)	
	01	0.02-second clock pulse (0.01 second ON; 0.01 second OFF)	
	02	**Negative (N) Flag**	
	03	Not used.	
	04	**Overflow (OF) Flag** Turns ON when an overflow occurs in a signed binary calculation.	Read-only
	05	**Underflow (UF) Flag** Turns ON when an underflow occurs in a signed binary calculation.	
	06	**Differential Monitor Complete Flag** Turns ON when differential monitoring is completed.	
	07	**STEP(08) Execution Flag** Turns ON for 1 cycle only at the start of process based on STEP(08).	
	08 to 15	Not used.	
SR 255	00	0.1-second clock pulse (0.05 second ON; 0.05 second OFF)	Read-only
	01	0.2-second clock pulse (0.1 second ON; 0.1 second OFF)	
	02	1.0-second clock pulse (0.5 second ON; 0.5 second OFF)	
	03	**Instruction Execution Error (ER) Flag** Turns ON when an error occurs during execution of an instruction.	
	04	**Carry (CY) Flag** Turns ON when there is a carry in the results of an instruction execution.	
	05	**Greater Than (GR) Flag** Turns ON when the result of a comparison operation is "greater."	
	06	**Equals (EQ) Flag** Turns ON when the result of a comparison operation is "equal," or when the result of an instruction execution is 0.	
	07	**Less Than (LE) Flag** Turns ON when the result of a comparison operation is "less."	
	08 to 15	Not used.	

Note DM 6601 in the PC Setup can be set to maintain the previous status of the Forced Status Hold Bit (SR 25211) and the I/O Hold Bit (SR 25212) when power is turned OFF.

4-5 AR Area

These bits mainly serve as flags related to CPM2C-S operation such as error flags, high-speed counter flags, pulse output operation flags, and cycle time values. These bits retain their status even after the CPM2C-S power supply has been turned off or when operation begins or stops.

Word(s)	Bit(s)	Function	
AR 00 (-DRT only)	00	DeviceNet switch settings error (ON when a settings error occurred, OFF when normal.)	
	01	Node number duplication or Bus off error (ON when an error occurred, OFF when normal.)	
	02	DeviceNet network power supply error (ON when an error occurred, OFF when normal.)	
	03	DeviceNet communications error (ON when an error occurred, OFF when normal.)	
	04 to 06	Not used.	
	07	DeviceNet status error (ON when an error occurred, OFF when normal.)	
	08	Explicit Connection Flag	ON: Connection established. OFF: Connection not established.
	09	Polling Connection Flag	
	10	Bit Strobe Connection Flag	
	11 to 14	Not used.	
	15	I/O Link in progress (ON when the I/O Link is operating, otherwise OFF.)	
AR 01	00 to 15	Reserved for the system (These bits cannot be used.)	
AR 02	00	Expansion Unit Error Flag for 1st Unit	These flags turn ON when there is an error in the corresponding Unit.
	01	Expansion Unit Error Flag for 2nd Unit	
	02	Expansion Unit Error Flag for 3rd Unit	
	03 to 07	Not used.	
	08 to 11	Number of Expansion Units and Expansion I/O Units connected	
	12 to 15	Not used.	
AR 03	00 to 15	Not used.	
AR 04	00 to 07	CompoBus/S Active Slave Flags for OUT 0 to OUT7 (ON when the Slave is communicating.)	
	08 to 15	CompoBus/S Slave Communications Error Flags for OUT 0 to OUT7	
AR 05	00 to 07	CompoBus/S Active Slave Flags for IN0 to IN7 (ON when the Slave is communicating.)	
	08 to 15	CompoBus/S Slave Communications Error Flags for IN0 to IN7	
AR 06	00 to 07	CompoBus/S Active Slave Flags for OUT 8 to OUT15 (ON when the Slave is communicating.)	
	08 to 15	CompoBus/S Slave Communications Error Flags for OUT 8 to OUT15	
AR 07	00 to 07	CompoBus/S Active Slave Flags for IN8 to IN15 (ON when the Slave is communicating.)	
	08 to 15	CompoBus/S Slave Communications Error Flags for IN8 to IN15	

Word(s)	Bit(s)	Function
AR 08	00 to 03	**RS-232C Port Error Code** 0: Normal completion 1: Parity error 2: Frame error 3: Overrun error
	04	**RS-232C Communications Error Flag** Turns ON when an RS-232C port communications error occurs.
	05	**RS-232C Transmit Ready Flag** Turns ON when the PC is ready to transmit data. (No-protocol and Host Link only)
	06	**RS-232C Reception Completed Flag** Turns ON when the PC has completed reading data. (No-protocol only)
	07	**RS-232C Reception Overflow Flag** Turns ON when an overflow has occurred. (No-protocol only)
	08 to 11	**Peripheral Port Error Code** 0: Normal completion 1: Parity error 2: Frame error 3: Overrun error
	12	**Peripheral Port Communications Error Flag** Turns ON when a peripheral port communications error occurs.
	13	**Peripheral Port Transmit Ready Flag** Turns ON when the PC is ready to transmit data. (No-protocol and Host Link only)
	14	**Peripheral Port Reception Completed Flag** Turns ON when the PC has completed reading data. (No-protocol only)
	15	**Peripheral Port Reception Overflow Flag** Turns ON when an overflow has occurred. (No-protocol only)
AR 09	00 to 15	**RS-232C Port Reception Counter** (4 digits BCD) Valid only when no-protocol communications are used.
AR 10	00 to 15	**Peripheral Port Reception Counter** (4 digits BCD) Valid only when no-protocol communications are used.

Word(s)	Bit(s)	Function
AR 11 (Note 1)	00 to 07	**High-speed Counter Range Comparison Flags** 00 ON: Counter PV is within comparison range 1 01 ON: Counter PV is within comparison range 2 02 ON: Counter PV is within comparison range 3 03 ON: Counter PV is within comparison range 4 04 ON: Counter PV is within comparison range 5 05 ON: Counter PV is within comparison range 6 06 ON: Counter PV is within comparison range 7 07 ON: Counter PV is within comparison range 8
	08	**High-speed Counter Comparison Operation** ON: Operating OFF: Stopped
	09	**High-speed Counter PV Overflow/Underflow Flag** ON: An overflow or underflow occurred. OFF: Normal operation
	10	Not used.
	11	**Pulse Output 0 Output Status** ON: Pulse output 0 is accelerating or decelerating. OFF: Pulse output 0 is operating at a constant rate.
	12	**Pulse Output 0 Overflow/Underflow Flag** ON: An overflow or underflow occurred. OFF: Normal operation
	13	**Pulse Output 0 Pulse Quantity Set Flag** ON: Pulse quantity has been set. OFF: Pulse quantity has not been set.
	14	**Pulse Output 0 Pulse Output Completed Flag** ON: Completed OFF: Not completed
	15	**Pulse Output 0 Output Status** ON: Pulses being output. OFF: Stopped.
AR 12 (Note 1)	00 to 11	Not used.
	12	**Pulse Output 1 Overflow/Underflow Flag** ON: An overflow or underflow occurred. OFF: Normal operation
	13	**Pulse Output 1 Pulse Quantity Set Flag** ON: Pulse quantity has been set. OFF: Pulse quantity has not been set.
	14	**Pulse Output 1 Pulse Output Completed Flag** ON: Completed OFF: Not completed
	15	**Pulse Output 1 Output Status** ON: Pulses being output. OFF: Stopped.

Word(s)	Bit(s)	Function
AR 13	00	**Power-up PC Setup Error Flag** Turns ON when there is an error in DM 6600 to DM 6614 (the part of the PC Setup area that is read at power-up).
	01	**Start-up PC Setup Error Flag** Turns ON when there is an error in DM 6615 to DM 6644 (the part of the PC Setup area that is read at the beginning of operation).
	02	**RUN PC Setup Error Flag** Turns ON when there is an error in DM 6645 to DM 6655 (the part of the PC Setup area that is always read).
	03, 04	Not used.
	05	**Cycle Time Too Long Flag** Turns ON if the actual cycle time is longer than the cycle time set in DM 6619.
	06, 07	Not used.
	08	**Memory Area Specification Error Flag** Turns ON when a non-existent data area address is specified in the program.
	09	**Flash Memory Error Flag** Turns ON when there is an error in flash memory.
	10	**Read-only DM Error Flag** Turns ON when a checksum error occurs in the read-only DM (DM 6144 to DM 6599) and that area is initialized.
	11	**PC Setup Error Flag** Turns ON when a checksum error occurs in the PC Setup area.
	12	**Program Error Flag** Turns ON when a checksum error occurs in the program memory (UM) area, or when an improper instruction is executed.
	13	**Expansion Instruction Area Error Flag** Turns ON when a checksum error occurs in the expansion instruction assignments area. The expansion instruction assignments will be cleared to their default settings.
	14	**Data Save Error Flag** Turns ON if data could not be retained with the backup battery. The following words are normally backed up by the battery: DM read/write words (DM 0000 to DM 1999 and DM 2022 to DM 2047), Error Log (DM 2000 to DM 2021), HR area, counter area, SR 25511, SR 25512 (if DM 6601 is set to hold I/O memory at startup), AR 23, operating mode (if DM 6600 is set to use the previous operating mode), and clock words (AR 17 to AR 21, for CPU Units with clocks). If the above words cannot be retained, all data will be cleared except that AR 2114 will be turned ON. The CPU Unit will start in PROGRAM mode if DM 6600 is set to use the previous operating mode. (If DM 6604 is set to generate an error, the PC will start in PROGRAM mode regardless.)
	15	**CompoBus/S ASIC Error Flag** Turns ON if an error occurred.
AR 14	00 to 15	**Maximum Cycle Time** (4 digits BCD, see note 3) The longest cycle time since the beginning of operation is stored. It is not cleared when operation stops, but it is cleared when operation starts again.
AR 15	00 to 15	**Current Cycle Time** (4 digits BCD, see note 3) The most recent cycle time during operation is stored. The Current Cycle Time is not cleared when operation stops.
AR 16	00 to 15	Not used.
AR 17 (Note 2)	00 to 07	**Minute** (00 to 59, BCD)
	08 to 15	**Hour** (00 to 59, BCD)
AR 18 (Note 2)	00 to 07	**Second** (00 to 59, BCD)
	08 to 15	**Minute** (00 to 59, BCD)
AR 19 (Note 2)	00 to 07	**Hour** (00 to 23, BCD)
	08 to 15	**Day of the Month** (01 to 31, BCD)
AR 20 (Note 2)	00 to 07	**Month** (01 to 12, BCD)
	08 to 15	**Year** (00 to 99, BCD)

Word(s)	Bit(s)	Function
AR 21 (Note 2)	00 to 07	**Day of the Week**[3] (00 to 06, BCD) 00: Sunday 01: Monday 02: Tuesday 03: Wednesday 04: Thursday 05: Friday 06: Saturday
	08 to 12	Not used.
	13	**30-second Compensation Bit** Turn this bit ON to round off to the nearest minute. When the seconds are 00 to 29, the seconds are cleared to 00 and the rest of the time setting is left unchanged. When the seconds are 30 to 59, the seconds are cleared to 00 and the time is incremented by one minute.
	14	**Clock Stop Bit** Turn this bit ON to stop the clock. The time/date can be overwritten while this bit is ON.
	15	**Clock Set Bit** To change the time/date, turn ON AR 2114, write the new time/date (being sure to leave AR 2114 ON), and then turn this bit ON to enable a new time/date setting. The clock will restart and both AR 2114 and AR 2115 will be turned OFF automatically.
AR 22	00 to 15	Not used.
AR 23	00 to 15	**Power-off Counter** (4 digits BCD) This is the count of the number of times that the power has been turned off. To clear the count, write “0000” from a Programming Device.

Note

1. The same data can be read immediately with PRV(62).
2. The time and date can be set while AR 2114 is ON. The new setting becomes effective when AR 2115 is turned ON. (AR 2114 and AR 2115 are turned OFF automatically when the new setting goes into effect.)
3. The units for the maximum and current cycle times are determined by the setting in bits 08 to 15 of DM 6618. A setting of 00 specifies 0.1-ms units, 01 specifies 0.1-ms units, 02 specifies 1-ms units, and 03 specifies 10-ms units.

4-6 PC Setup

4-6-1 Overview

The PC Setup (DM 6600 to DM 6655) contains various settings that control PC operation. Changes to the PC Setup are saved when the CPM2C-S is turned OFF, program execution is started, or program execution is stopped.

Always perform one of the following operations after changing the PC Setup:

- Switch the CPM2C-S to MONITOR mode or RUN mode.
- Turn the CPM2C-S OFF and then ON again.

Changing PC Setup Settings

The PC Setup (DM 6600 to DM 6655) can be edited from a Programming Device. The settings in DM 6600 to DM 6644 can be changed only when the PC is in PROGRAM mode. The settings in DM 6645 to DM 6655 can be changed when the PC is in PROGRAM mode or MONITOR mode, although the PC’s cycle time will be quite long when the settings are changed in MONITOR mode.

CPU Unit Access of PC Setup Settings

The CPM2C-S CPU Unit reads parts of the PC Setup at different points of PC operation. The CPU Unit timing is as follows:

DM 6600 to DM 6614: Read once when the PC is turned ON.
DM 6615 to DM 6644: Read once at the start of program execution.
DM 6645 to DM 6655: Read regularly while the PC is ON.

PC Setup Errors

If there is an error in the PC Setup settings, a non-fatal error (error code 9B) will be generated when the CPU Unit accesses that part of the PC Setup. The PC Setup Error Flags (AR 1300 to AR 1302) indicate the part of the PC Setup where the error is located. The default setting (usually 0000) is used instead of the incorrect setting.

4-6-2 PC Setup Settings

Word(s)	Bit(s)	Function	
PC Startup Processing (DM 6600 to DM 6614) The following settings are read by the CPU when the PC is turned ON.			
DM 6600	00 to 07	Startup mode (effective when bits 08 to 15 are set to 02). 00 (Hex): PROGRAM; 01 (Hex): MONITOR; 02 (Hex): RUN	
	08 to 15	Startup mode designation 00 (Hex): According to the setting on DIP switch pin 4 and peripheral port connection (See table at the bottom of this page.) 01 (Hex): Continue operating mode last used before power was turned OFF. 02 (Hex): Use setting in bits 00 to 07.	
DM 6601	00 to 07	Not used.	
	08 to 11	IOM Hold Bit (SR 25212) Status at Startup 0 (Hex): Reset to 0; 1 (Hex): Maintain previous status	
	12 to 15	Forced Status Hold Bit (SR 25211) Status at Startup 0 (Hex): Reset to 0; 1 (Hex): Maintain previous status	
DM 6602	00 to 03	Program memory write-protection 0 (Hex): Program memory unprotected 1 (Hex): Program memory write-protected (except DM 6602 itself)	
	04 to 07	Programming Console display language 0 (Hex): English; 1 (Hex): Japanese	
	08 to 11	Expansion instruction function code assignments 0 (Hex): Default settings 1 (Hex): User assignments	
	12 to 15	Not used.	
DM 6603	00 to 03	Maximum number of CompoBus/S nodes 0 (Hex): 256-point mode (32 nodes) 1 (Hex): 128-point mode (16 nodes)	
	04 to 07	CompoBus/S communications mode 0 (Hex): High-speed mode 1 (Hex): Long-distance mode	
	08 to 15	Not used.	
DM 6604	00 to 07	00 (Hex): A memory error will not be generated if data could not be retained by the battery. 01 (Hex): A memory error will be generated if data could not be retained by the battery.	
	08 to 15	Not used.	
DM 6605	00 to 03	DeviceNet Read/Write area settings 0 (Hex): Read area (IN) IR 020 to IR 027; Write area (OUT) IR 030 to IR 037 1 (Hex): Use settings in DM 6606 to DM 6609.	
	04 to 07	Transmission of CPM2C-S status to the DeviceNet Master 0 (Hex): Attach status information ahead of data. 1 (Hex): Do not attach status information ahead of data.	
	08 to 15	Not used.	
DM 6606	00 to 07	DeviceNet I/O Link Write (OUT) area settings (Master → CPM2C-S)	Data area 01 (Hex): I/O area 1 (IR 000 to IR 049) 02 (Hex): I/O area 2 (IR 200 to IR 227) 03 (Hex): DM area (DM 0000 to DM 2047) 04 (Hex): LR area (LR 00 to LR 15) 05 (Hex): HR area (HR 00 to HR 19) 07 (Hex): Timer/counter area (TC 000 to TC 255)
	08 to 15		Number of bytes 01 to 40 (Hex) (equivalent to 0 to 64 decimal)
DM 6607	00 to 15		Starting word address 0000 to 07FF (Hex) (equivalent to 0000 to 2047 decimal)

Word(s)	Bit(s)	Function	
DM 6608	00 to 07	DeviceNet I/O Link Read (IN) area settings (CPM2C-S → Master)	Data area 01 (Hex): I/O area 1 (IR 000 to IR 049) 02 (Hex): I/O area 2 (IR 200 to IR 227) 03 (Hex): DM area (DM 0000 to DM 2047) 04 (Hex): LR area (LR 00 to LR 15) 05 (Hex): HR area (HR 00 to HR 19) 06 (Hex): AR area (AR 00 to 23) 07 (Hex): Timer/counter area (TC 000 to TC 255)
	08 to 15		Number of bytes 01 to 40 (Hex) (equivalent to 0 to 64 decimal)
DM 6609	00 to 15		Starting word address 0000 to 07FF (Hex) (equivalent to 0000 to 2047 decimal)
DM 6610 to DM 6614	00 to 15	Not used.	Not used.

Note The startup operating mode will be as shown in the following table if bits 08 to 15 of DM 6600 are set to 00.

Connected Programming Device	Startup operating mode	
	DIP switch pin 4 ON	DIP switch pin 4 OFF
None	PROGRAM	RUN
Programming Console	Mode set on Programming Console mode switch	
Other Device	PROGRAM	

Word(s)	Bit(s)	Function
Cycle Time Settings (DM 6615 to DM 6619) The following settings are read by the CPU when program execution is started.		
DM 6615	00 to 15	Not used.
DM 6616	00 to 07	Servicing time for RS-232C port (Effective when bits 08 to 15 are set to 01.) 00 to 99 (BCD): Percentage of cycle time used to service RS-232C port.
	08 to 15	RS-232C port servicing setting enable 00 (Hex): 5% of the cycle time 01 (Hex): Use time in bits 00 to 07.
DM 6617	00 to 07	Servicing time for peripheral port (Effective when bits 08 to 15 are set to 01.) 00 to 99 (BCD): Percentage of cycle time used to service peripheral.
	08 to 15	Peripheral port servicing setting enable 00 (Hex): 5% of the cycle time 01 (Hex): Use time in bits 00 to 07.
DM 6618	00 to 07	Cycle monitor time (Effective when bits 08 to 15 are set to 01, 02, or 03.) 00 to 99 (BCD): Setting (See bits 08 to 15, below.) A fatal error will be generated and PC operation will stop if the cycle time exceeds the cycle monitor time set here.
	08 to 15	Cycle monitor enable (Setting in 00 to 07 × units; 99 s max.) 00 (Hex): 120 ms (setting in bits 00 to 07 disabled) 01 (Hex): Setting units: 10 ms 02 (Hex): Setting units: 100 ms 03 (Hex): Setting units: 1 s
DM 6619	00 to 15	Minimum cycle time 0000: Variable (no minimum) 0001 to 9999 (BCD): Minimum time in ms

Word(s)	Bit(s)	Function
Interrupt Processing (DM 6620 to DM 6639) The following settings are read by the CPU when program execution is started.		
DM 6620	00 to 03	Input time constant for IR 00000 to IR 00002 0 (Hex): 10 ms; 1 (Hex): 1 ms; 2 (Hex): 2 ms; 3 (Hex): 3 ms; 4 (Hex): 5 ms; 5 (Hex): 10 ms; 6 (Hex): 20 ms; 7 (Hex): 40 ms; 8 (Hex): 80 ms
	04 to 07	Input time constant for IR 00003 and IR 00004 (Setting same as bits 00 to 03)
	08 to 11	Input time constant for IR 00005 (Setting same as bits 00 to 03)
	12 to 15	Not used.
DM 6621	00 to 07	Input time constant for IR 001 00 (Hex): 10 ms 01 (Hex): 1 ms 02 (Hex): 2 ms 03 (Hex): 3 ms 04 (Hex): 5 ms 05 (Hex): 10 ms 06 (Hex): 20 ms 07 (Hex): 40 ms 08 (Hex): 80 ms
	08 to 15	Input constant for IR 002 (Setting same as for IR 001.)
DM 6622	00 to 07	Input constant for IR 003 (Setting same as for IR 001.)
	08 to 15	Input constant for IR 004 (Setting same as for IR 001.)
DM 6623	00 to 07	Input constant for IR 005 (Setting same as for IR 001.)
	08 to 15	Input constant for IR 006 (Setting same as for IR 001.)
DM 6624	00 to 07	Input constant for IR 007 (Setting same as for IR 001.)
	08 to 15	Input constant for IR 008 (Setting same as for IR 001.)
DM 6625	00 to 07	Input constant for IR 009 (Setting same as for IR 001.)
	08 to 15	Not used.
DM 6626 to DM 6627	00 to 15	Not used.
DM 6628	00 to 03	Function selection for input bit IR 00003 0 (Hex): Used as a normal input. 1 (Hex): Used as an interrupt input (including counter mode). 2 (Hex): Used as a quick-response input.
	04 to 07	Function selection for input bit IR 00004 (Setting same as for IR 00003.)
	08 to 15	Not used.
DM 6629	00 to 03	PV coordinate system for pulse output 0 0 (Hex): Relative coordinates; 1 (Hex): Absolute coordinates
	04 to 07	PV coordinate system for pulse output 1 0 (Hex): Relative coordinates; 1 (Hex): Absolute coordinates
	08 to 15	Not used.
DM 6630 to DM 6639	00 to 15	Not used.
High-speed Counter Settings (DM 6640 to DM 6644) The following settings are read by the CPU when program execution is started.		
DM 6640 to DM 6641	00 to 15	Not used.
DM 6642	00 to 03	High-speed counter mode 0 (Hex): Differential phase mode (5 kHz) 1 (Hex): Pulse + direction input mode (20 kHz) 2 (Hex): Up/down input mode (20 kHz) 4 (Hex): Increment mode (20 kHz)
	04 to 07	High-speed counter reset mode 0: Z phase and software reset; 1: Software reset only
	08 to 15	High-speed counter/Synchronized pulse control for IR 00000 to IR 00002 00 (Hex): Don't use either function. 01 (Hex): Use as high-speed counters. 02 (Hex): Use for synchronized pulse control (10 to 500 Hz). 03 (Hex): Use for synchronized pulse control (20 Hz to 1 kHz). 04 (Hex): Use for synchronized pulse control (300 Hz to 20 kHz).
DM 6643, DM 6644	00 to 15	Not used.

Word(s)	Bit(s)	Function
RS-232C Port Communications Settings The following settings are read regularly by the CPU while the PC is ON. If pin 3 of the CPM2C-S CPU Unit's DIP switch is ON, communications through the CPM2C-S' RS-232C port are governed by the default settings (all 0) regardless of the settings in DM 6645 through DM 6649.		
DM 6645	00 to 03	Port settings 0 (Hex): Standard (1 start bit, 7 data bits, even parity, 2 stop bits, 9,600 bps), Host Link unit number: 0 1 (Hex): Settings in DM 6646 (Any other setting will cause a non-fatal error and AR 1302 will turn ON.)
	04 to 07	CTS control setting 0 (Hex): Disable CTS control; 1 (Hex): Enable CTS control (Any other setting will cause a non-fatal error and AR 1302 will turn ON.)
	08 to 11	Link words for 1:1 data link 0 (Hex): LR 00 to LR 15 (Any other settings are ineffective.)
	12 to 15	Communications mode 0 (Hex): Host Link; 1 (Hex): No-protocol; 2 (Hex): 1:1 PC Link Slave; 3 (Hex): 1:1 PC Link Master; 4 (Hex): NT Link (Any other setting causes a non-fatal error and turns ON AR 1302.)
DM 6646	00 to 07	Baud rate 00 (Hex): 1,200 bps; 01 (Hex): 2,400 bps; 02 (Hex): 4,800 bps; 03 (Hex): 9,600 bps; 04 (Hex): 19,200 bps
	08 to 15	Frame format Start bits / Data bits / Stop bits / Parity 00 (Hex): 1 bit / 7 bits / 1 bit / Even 01 (Hex): 1 bit / 7 bits / 1 bit / Odd 02 (Hex): 1 bit / 7 bits / 1 bit / None 03 (Hex): 1 bit / 7 bits / 2 bits / Even 04 (Hex): 1 bit / 7 bits / 2 bits / Odd 05 (Hex): 1 bit / 7 bits / 2 bits / None 06 (Hex): 1 bit / 8 bits / 1 bit / Even 07 (Hex): 1 bit / 8 bits / 1 bit / Odd 08 (Hex): 1 bit / 8 bits / 1 bit / None 09 (Hex): 1 bit / 8 bits / 2 bits / Even 10 (Hex): 1 bit / 8 bits / 2 bits / Odd 11 (Hex): 1 bit / 8 bits / 2 bits / None (Any other setting specifies standard settings (1 start bit, 7 data bits; even parity, 2 stop bits, 9,600 bps), causes a non-fatal error, and turns ON AR 1302.)
DM 6647	00 to 15	Transmission delay (0000 to 9999 BCD sets a delay of 0 to 99,990 ms.) (Any other setting specifies a delay of 0 ms, causes a non-fatal error, and turns ON AR 1302.)
DM 6648	00 to 07	Node number (Host Link) 00 to 31 (BCD) (Any other setting specifies a node number of 00, causes a non-fatal error, and turns ON AR 1302.)
	08 to 11	Start code selection for no-protocol communications 0 (Hex): Disables start code; 1 (Hex): Enables start code in DM 6649 (Any other setting disables the start code, causes a non-fatal error, and turns ON AR 1302.)
	12 to 15	End code selection for no-protocol communications 0 (Hex): Disables end code; 1 (Hex): Enables end code in DM 6649; 2 (Hex): Sets end code of CR, LF. (Any other setting disables the end code, causes a non-fatal error, and turns ON AR 1302.)
DM 6649	00 to 07	Start code (00 to FF) (This setting is valid only when bits 8 to 11 of DM 6648 are set to 1.)
	08 to 15	When bits 12 to 15 of DM 6648 set to 0: Sets the number of bytes to receive. (00: 256 bytes; 01 to FF: 1 to 255 bytes) When bits 12 to 15 of DM 6648 set to 1: Sets the end code. (00 to FF)

Word(s)	Bit(s)	Function
Peripheral Port Communications Settings The following settings are read regularly by the CPU while the PC is ON. If pin 3 of the CPM2C-S CPU Unit's DIP switch is ON, communications through the CPM2C-S' peripheral port are governed by the default settings (all 0) regardless of the settings in DM 6650 through DM 6651. When connecting a computer running OMRON Support Software to the peripheral bus, turn OFF pin 3 of the DIP switch and set DM 6650 to 0001 (host link port settings specified in DM 6651). The computer cannot be connected to the peripheral bus if bits 00 to 03 of DM 6650 are set to 0 (standard port settings).		
DM 6650	00 to 03	Port settings 00 (Hex): Standard (1 start bit, 7 data bits, even parity, 2 stop bits, 9,600 bps), Host Link unit number: 0 01 (Hex): Settings in DM 6651 (Any other setting specifies standard settings, causes a non-fatal error, and turns ON AR 1302.)
	04 to 11	Not used.
	12 to 15	Communications mode 0 (Hex): Host Link or peripheral bus; 1 (Hex): No-protocol (Any other setting specifies Host Link, causes a non-fatal error, and turns ON AR 1302.)
DM 6651	00 to 07	Baud rate 00 (Hex): 1,200 bps; 01 (Hex): 2,400 bps; 02 (Hex): 4,800 bps; 03 (Hex): 9,600 bps; 04 (Hex): 19,200 bps
	08 to 15	Frame format Start bits / Data bits / Stop bits / Parity 00 (Hex): 1 bit / 7 bits / 1 bit / Even 01 (Hex): 1 bit / 7 bits / 1 bit / Odd 02 (Hex): 1 bit / 7 bits / 1 bit / None 03 (Hex): 1 bit / 7 bits / 2 bits / Even 04 (Hex): 1 bit / 7 bits / 2 bits / Odd 05 (Hex): 1 bit / 7 bits / 2 bits / None 06 (Hex): 1 bit / 8 bits / 1 bit / Even 07 (Hex): 1 bit / 8 bits / 1 bit / Odd 08 (Hex): 1 bit / 8 bits / 1 bit / None 09 (Hex): 1 bit / 8 bits / 2 bits / Even 10 (Hex): 1 bit / 8 bits / 2 bits / Odd 11 (Hex): 1 bit / 8 bits / 2 bits / None (Any other setting specifies standard settings (1 start bit, 7 data bits; even parity, 2 stop bits, 9,600 bps), causes a non-fatal error, and turns ON AR 1302.)
DM 6652	00 to 15	Transmission delay (0000 to 9999 BCD sets a delay of 0 to 99,990 ms.) (Any other setting specifies a delay of 0 ms, causes a non-fatal error, and turns ON AR 1302.)
DM 6653	00 to 07	Node number (Host Link) 00 to 31 (BCD) (Any other setting specifies a node number of 00, causes a non-fatal error, and turns ON AR 1302.)
	08 to 11	Start code selection for no-protocol communications 0 (Hex): Disables start code; 1 (Hex): Enables start code in DM 6649 (Any other setting disables the start code, causes a non-fatal error, and turns ON AR 1302.)
	12 to 15	End code selection for no-protocol communications 0 (Hex): Disables end code; 1 (Hex): Enables end code in DM 6649; 2 (Hex): Sets end code of CR, LF. (Any other setting disables the end code, causes a non-fatal error, and turns ON AR 1302.)
DM 6654	00 to 07	Start code (00 to FF) (This setting is valid only when bits 8 to 11 of DM 6648 are set to 1.)
	08 to 15	When bits 12 to 15 of DM 6648 set to 0: Sets the number of bytes to receive. (00: 256 bytes; 01 to FF: 1 to 255 bytes) When bits 12 to 15 of DM 6648 set to 1: Sets the end code. (00 to FF)

Word(s)	Bit(s)	Function
Error Log Settings (DM 6655) The following settings are read regularly by the CPU while the PC is ON.		
DM 6655	00 to 03	Style 0 (Hex): Shift after 7 records have been stored 1 (Hex): Store only first 7 records (no shifting) 2 to F (Hex): Do not store records
	04 to 07	Not used.
	08 to 11	Cycle time monitor enable 0 (Hex): Generate a non-fatal error for a cycle time that is too long. 1 (Hex): Do not generate a non-fatal error.
	12 to 15	Low battery error enable 0 (Hex): Generate a non-fatal error for low battery voltage. 1 (Hex): Do not generate a non-fatal error.

Note If an out-of-range value is set, the following communications conditions will result. In that case, reset the value so that it is within the permissible range.

Communications mode:	Host Link
Communications format:	Standard settings (1 start bit, 7-bit data; even parity, 2 stop bits, 9,600 bps)
Transmission delay:	No
Node number:	00

4-7 Basic PC Operation and I/O Processes

This section explains the PC Setup settings related to basic operation and I/O processes.

4-7-1 Startup Mode

The operating mode the PC will start in when power is turned on can be set as shown below.

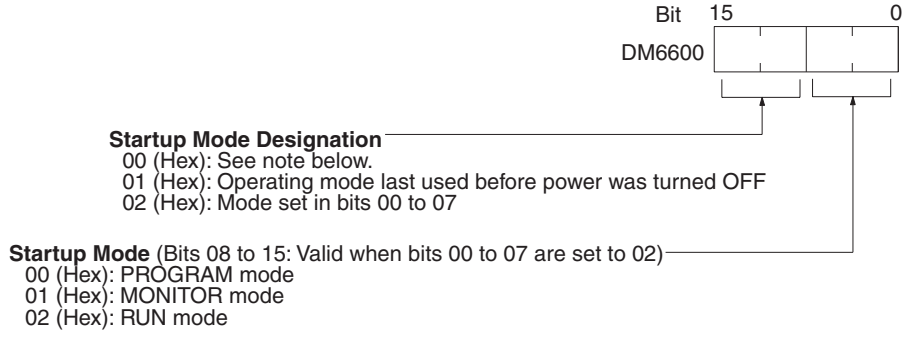

Note When the “startup mode designation” is set to 00, the operating mode at startup depends upon the connected Programming Device and the setting on pin 4 of the CPM2C-S CPU Unit’s DIP switch.
Refer to *1-3-3 Operating Mode at Startup* for complete details.

4-7-2 Hold Bit Status

Make the settings shown below to determine whether, when the power supply is turned on, the Forced Status Hold Bit (SR 25211) and/or IOM Hold Bit (SR 25212) will retain the status that was in effect when the power was last turned off, or whether the previous status will be cleared.

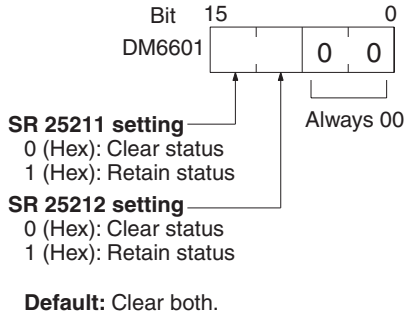

The Forced Status Hold Bit (SR 25211) determines whether or not the forced set/reset status is retained when changing from PROGRAM mode to MONITOR mode.

The IOM Hold Bit (SR 25212) determines whether or not the status of IR bits and LR bits is retained when PC operation is started and stopped.

4-7-3 Program Memory Write-protection

In CPM2C-S PCs, the program memory can be protected by setting bits 00 to 03 of DM 6602 to 1. Bits 04 to 07 determine whether Programming Console messages are displayed in English or Japanese.

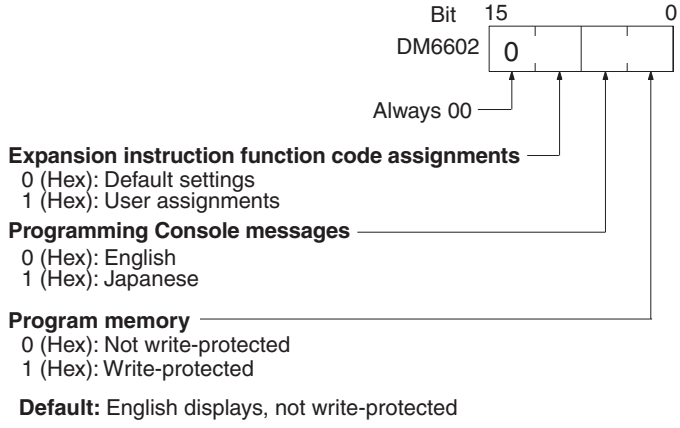

Note DM 6602 itself can still be changed after the program memory has been write-protected by setting bits 04 to 07 of DM 6602 to 1.

4-7-4 RS-232C Port Servicing Time

The following settings are used to determine the percentage of the cycle time devoted to servicing the RS-232C port.

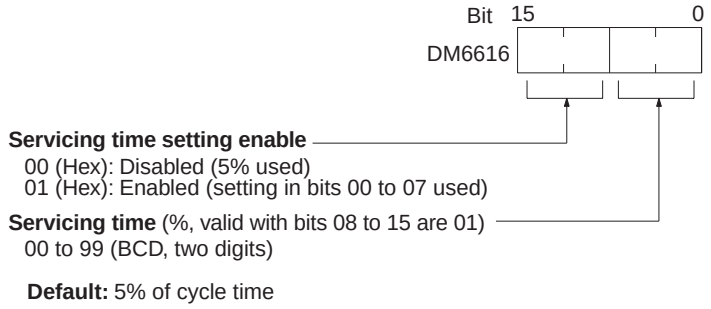

For example, if DM 6616 is set to 0110, the RS-232C port will be serviced for 10% of the cycle time.

The servicing time will be 0.34 ms minimum.

The entire servicing time will not be used unless processing requests exist.

4-7-5 Peripheral Port Servicing Time

The following settings are used to determine the percentage of the cycle time devoted to servicing the peripheral port.

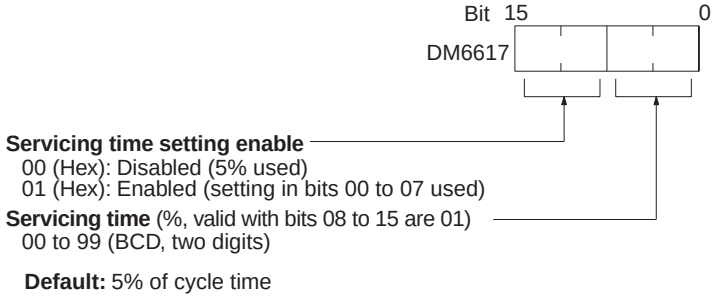

For example, if DM 6617 is set to 0115, the peripheral port will be serviced for 15% of the cycle time.

The servicing time will be 0.34 ms minimum.

The entire servicing time will not be used unless processing requests exist.

4-7-6 Cycle Monitor Time

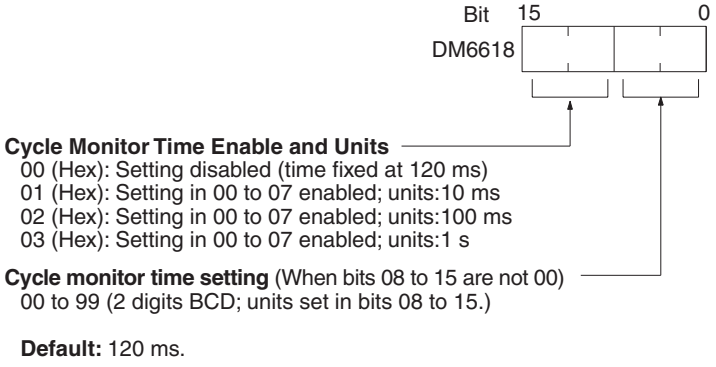

The cycle monitor time is used for checking for extremely long cycle times, as can happen when the program goes into an infinite loop. If the cycle time exceeds the cycle monitor setting, a fatal error (FALS 9F) will be generated.

Note

1. The units used for the maximum and current cycle times recorded in the AR area (AR 14 and AR 15) are determined by the setting for the cycle monitor time in DM 6618, as shown below.

   Bits 08 to 15 set to 01 (Hex):0.1 ms
   Bits 08 to 15 set to 02 (Hex):1 ms
   Bits 08 to 15 set to 03 (Hex):10 ms

2. If the cycle time is 1 s or longer, the cycle time read from Programming Devices will be 999.9 ms. The correct maximum and current cycle times will be recorded in the AR area.

Example

If 0230 is set in DM 6618, an FALS 9F error will not occur until the cycle time exceeds 3 s. If the actual cycle time is 2.59 s, the current cycle time stored in the AR area will be 2590 (ms), but the cycle time read from a Programming Device will be 999.9 ms.

A “cycle time over” error (non-fatal) will be generated when the cycle time exceeds 100 ms unless detection of long cycle times is disabled using the setting in DM 6655.

4-7-7 Minimum Cycle Time

Make the settings shown below to standardize the cycle time and to eliminate variations in I/O response time by setting a minimum cycle time.

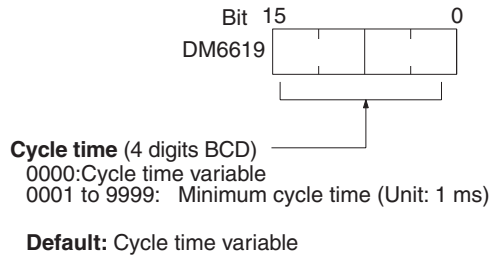

If the actual cycle time is shorter than the minimum cycle time, execution will wait until the minimum time has expired. If the actual cycle time is longer than the minimum cycle time, then operation will proceed according to the actual cycle time. AR 2405 will turn ON if the minimum cycle time is exceeded.

4-7-8 Input Time Constants

Make the settings shown below to set the time from when the actual inputs from the DC Input Unit are turned ON or OFF until the corresponding input bits are updated (i.e., until their ON/OFF status is changed). Make these settings when you want to adjust the time until inputs stabilize.

Increasing the input time constant can reduce the effects from chattering and external noise.

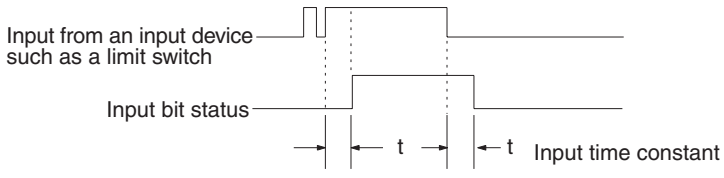

Use a Programming Device to set the input time constants.

Input Time Constants for IR 000

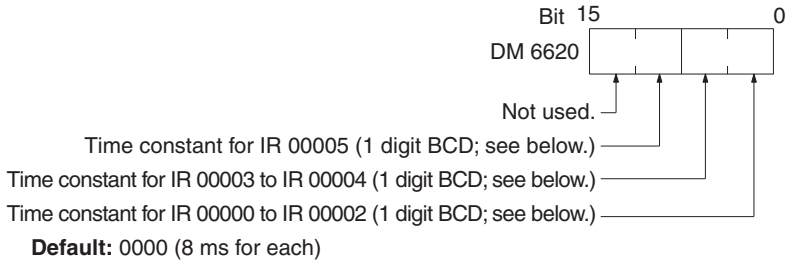

Input Time Constants for IR 001 to IR 009

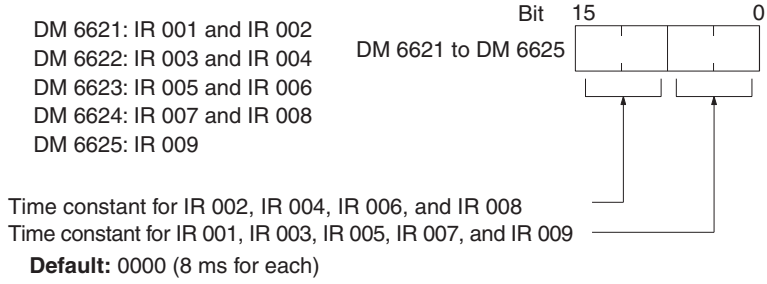

The nine possible settings for the input time constant are shown below. (Set only the rightmost digit for each setting for IR 000.)

00 (Hex): 8 ms 01 (Hex): 1 ms 02 (Hex): 2 ms
03 (Hex): 4 ms 04 (Hex): 8 ms 05 (Hex): 16 ms
06 (Hex): 32 ms 07 (Hex): 64 ms 08 (Hex): 128 ms

4-7-9 Error Log Settings

Error Detection and Error Log Operation (DM 6655)

Make the settings shown below to determine whether or not a non-fatal error is to be generated when the cycle time exceeds 100 ms or when the voltage of the built-in battery drops, and to set the method for storing records in the error log when errors occur.

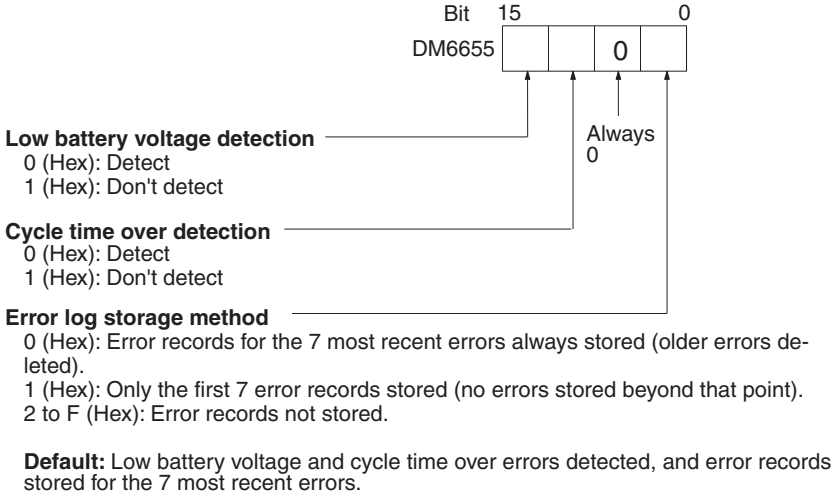

Battery errors and cycle time overrun errors are non-fatal errors.

Refer to *4-8 Error Log* below for details on the error log.

4-8 Error Log

The error log function registers the error code of any fatal or non-fatal error that occurs in the PC. The date and time at which the error occurred are registered along with the error code.

In CPM2C-S PCs, the error log is stored in DM 2000 through DM 2021. Up to 7 error records can be stored.

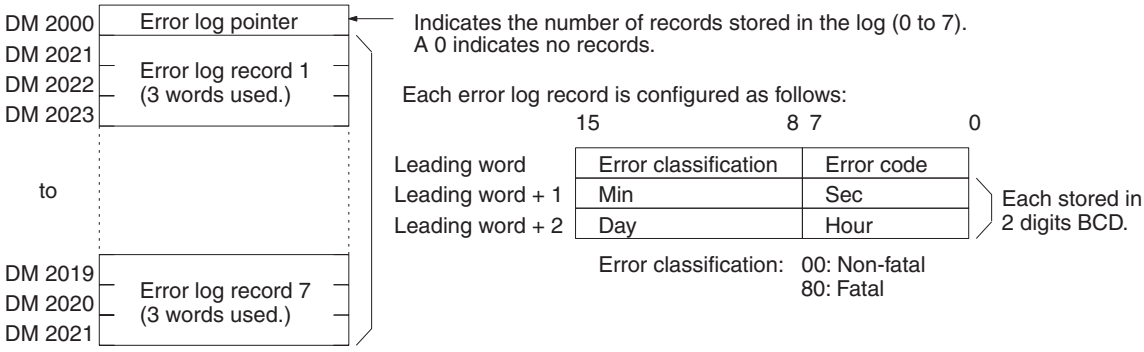

Note An error record with an error code of 00 will be stored in the error log for power interruptions. Refer to *9-2 Self-diagnostic Functions* for tables listing the error codes.

Error Log Storage Methods

The error log storage method is set in the PC Setup (bits 00 to 03 of DM 6655). Set any of the following methods.

1,2,3...

1. Set 0 in bits 00 to 03 of DM 6655. (This is the default setting.)
   This method stores the most recent 7 error log records and discards older records. This is achieved by shifting the records as shown below so that the oldest record (record 0) is lost whenever a new record is generated.

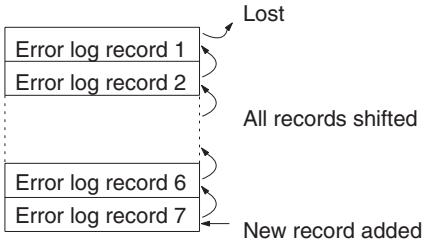

2. Set 1 in bits 00 to 03 of DM 6655.
   This method stores only the first 7 error log records, and ignores any subsequent errors beyond those 7.
3. Set another value (other than 0 or 1) in bits 00 to 03 of DM 6655.
   A setting other than 0 or 1 disables the log so that no records are stored.

Clearing the Error Log

To clear the entire error log, turn ON SR 25214 from a Programming Device. (After the error log has been cleared, SR 25214 will turn OFF again automatically.)

SECTION 5
Exchanging Data with CompoBus/S Slaves

This section explains how to exchange data with CompoBus/S Slaves when using the CPM2C-S as a CompoBus/S Master. Read this section when using CompoBus/S I/O link communications.

5-1 Initial Settings 112
5-1-1 Setting the Maximum Number of Nodes 112
5-1-2 Setting the CompoBus/S Communications Mode 112
5-2 Remote I/O Communications 113
5-2-1 Slaves 113
5-2-2 I/O Allocation 114
5-3 Communications Status. 115

5-1 Initial Settings

5-1-1 Setting the Maximum Number of Nodes

The maximum number of Slaves that can be connected through CompoBus/S can be set to 16 or 32 Slaves.

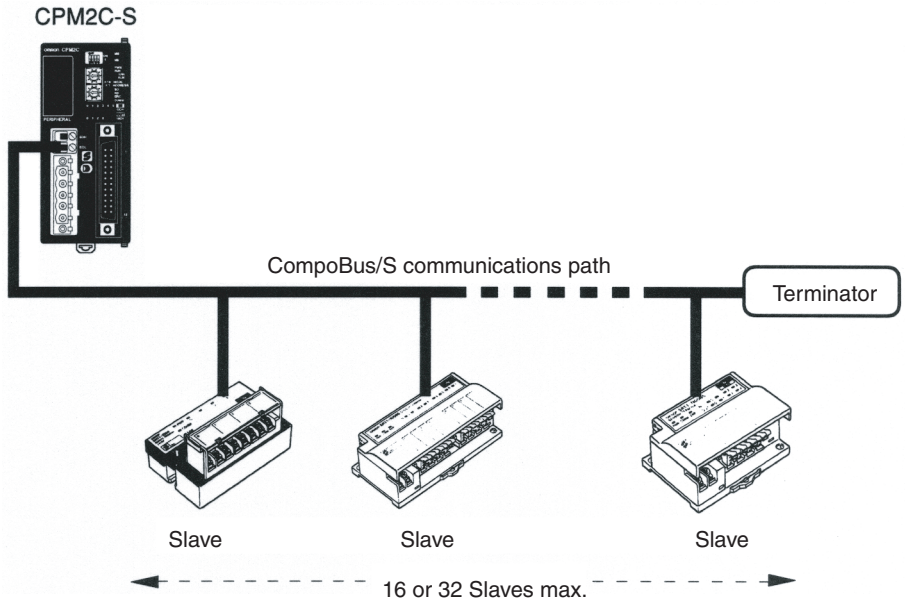

Use a Programming Device to set the maximum number of Slaves in DM 6603 of the PC Setup, as shown in the following table.

Word	Bits	Function		Settings	Default
DM 6603	00 to 03	Sets the max. number of CompoBus/S Slaves to 16 or 32.	0 (Hex): 32 Slaves 1 (Hex): 16 Slaves	0 or 1	0 (32 Slaves)

Note 1. Always turn the power OFF and ON again after changing this setting.

2. The communications response time is affected by the max. number of Slaves setting as shown below.

Communications mode	Max. number of Slaves	Communications response time
High-speed mode	16	0.5 ms
	32	0.8 ms
Long-distance mode	16	4.0 ms
	32	6.0 ms

5-1-2 Setting the CompoBus/S Communications Mode

The CompoBus/S communications mode can be set to high-speed mode or long-distance mode.

Communications mode	Max. communications distance (trunk line length)	Communications speed
High-speed mode	100 m	750 kbps
Long-distance mode	500 m	93.75 kbps

Use a Programming Device to set the maximum number of Slaves in DM 6603 of the PC Setup, as shown in the following table.

Word	Bits	Function		Settings	Default
DM 6603	04 to 07	Sets the CompoBus/S communications mode.	0 (Hex): High-speed mode 1 (Hex): Long-distance mode	0 or 1	0 (High-speed)

Note Always turn the power OFF and ON again after changing this setting.

5-2 Remote I/O Communications

5-2-1 Slaves

The following table lists the commonly used Slaves. Refer to the *CompoBus/S Operation Manual* (W266) for more details. The SRT1-series Slaves support high-speed communications mode only. The SRT2-series Slaves support both high-speed and long-distance communications modes.

Name	SRT2-series	SRT1-series
I/O Terminals (Transistor)	SRT2-ID04 SRT2-ID04-1 SRT2-ID08 SRT2-ID08-1 SRT2-ID16 SRT2-ID16-1 SRT2-ID16T SRT2-ID16T-1 SRT2-OD04 SRT2-OD04-1 SRT2-OD08 SRT2-OD08-1 SRT2-OD16 SRT2-OD16-1 SRT2-OD16T SRT2-OD16T-1 SRT2-MD16T SRT2-MD16T-1	SRT1-ID04 SRT1-ID04-1 SRT1-ID08 SRT1-ID08-1 SRT1-ID16 SRT1-ID16-1 Not available Not available SRT1-OD04 SRT1-OD04-1 SRT1-OD08 SRT1-OD08-1 SRT1-OD16 SRT1-OD16-1 Not available Not available Not available Not available
Connector Terminals (Transistor)	SRT2-VID08S SRT2-VID08S-1 SRT2-VID16ML SRT2-VID16ML-1 SRT2-ID32ML SRT2-ID32ML-1 SRT2-VOD08S SRT2-VOD08S-1 SRT2-VOD16ML SRT2-VOD16ML-1 SRT2-OD32ML SRT2-OD32ML-1 SRT2-MD32ML SRT2-MD32ML-1	Not available
Output Terminals (Relay outputs)	SRT2-ROC08 SRT2-ROC16	SRT1-ROC08 SRT1-ROC16
Output Terminals (Power MOSFET outputs)	SRT2-ROF08 SRT2-ROF16	SRT1-ROF08 SRT1-ROF16
I/O Modules	Not available	SRT1-ID16P SRT1-OD16P
Analog Terminals	SRT2-AD04 SRT2-DA02	Not available
Sensor Amplifier Terminals	Not available	SRT1-TID04S SRT1-XID04S
Sensor Terminals	Not available	SRT1-ID08S SRT1-OD08S SRT1-ND08S

Name	SRT2-series	SRT1-series
Bit-chain Terminal	Not available	SRT1-B1T
Environment Resistive Terminals	SRT2-ID04CL SRT2-ID04CL-1 SRT2-ID08 SRT2-ID08CL-1 SRT2-OD04CL SRT2-OD04CL-1 SRT2-OD08CL SRT2-OD08CL-1	Not available

5-2-2 I/O Allocation

In the CPM2C-S, CompoBus/S input words IR 020 to IR 027 and CompoBus/S output words IR 030 to IR 037 are allocated for the CompoBus/S Terminal's I/O. The CompoBus/S Terminal's I/O (IN0 to IN15 and OUT0 to OUT15) are allocated as indicated in the following table.

IN0 to IN15 are the node addresses for the Input Terminals and OUT0 to OUT15 are the node addresses for the Output Terminals.

Word		Relay numbers	
		Bit	
		15 14 13 12 11 10 9 8	7 6 5 4 3 2 1 0
Input	IR 020	IN1	IN0
	IR 021	IN3	IN2
	IR 022	IN5	IN4
	IR 023	IN7	IN6
	IR 024	IN9	IN8
	IR 025	IN11	IN10
	IR 026	IN13	IN12
	IR 027	IN15	IN14
Output	IR 030	OUT1	OUT0
	IR 031	OUT3	OUT2
	IR 032	OUT5	OUT4
	IR 033	OUT7	OUT6
	IR 034	OUT9	OUT8
	IR 035	OUT11	OUT10
	IR 036	OUT13	OUT12
	IR 037	OUT15	OUT14

Note

1. When the maximum number of CompoBus/S nodes is set to 16, IN8 to IN15 and OUT8 to OUT15 can be used as work bits.
2. CompoBus/S Terminals with less than 8 points are allocated bit addresses from either 0 or 8, filling up from the lowest available word.
3. CompoBus/S Terminals with 16 points can be set for only even number addresses.

5-3 Communications Status

The status of communications with CompoBus/S Terminals is indicated with the status flags in AR 04 through AR 07. Bits 0 to 7 contain the Active Slave Flags and bits 8 to 15 contain the Slave Communications Error Flags.

Word	Uppermost bits: Slave Communications Error Flags								Lower Bits: Active Slave Flags							
	15	**14**	**13**	**12**	**11**	**10**	**9**	**8**	**7**	**6**	**5**	**4**	**3**	**2**	**1**	**0**
AR04	OUT7	OUT6	OUT5	OUT4	OUT3	OUT2	OUT1	OUT0	OUT7	OUT6	OUT5	OUT4	OUT3	OUT2	OUT1	OUT0
AR05	IN7	IN6	IN5	IN4	IN3	IN2	IN1	IN0	IN7	IN6	IN5	IN4	IN3	IN2	IN1	IN0
AR06	OUT 15	OUT 14	OUT 13	OUT 12	OUT 11	OUT 10	OUT 9	OUT 8	OUT 15	OUT 14	OUT 13	OUT 12	OUT 11	OUT 10	OUT 9	OUT 8
AR07	IN15	IN14	IN13	IN12	IN11	IN10	IN9	IN8	IN15	IN14	IN13	IN12	IN11	IN10	IN9	IN8

Note

1. IN0 to IN15 are the input terminals and OUT0 to OUT15 are the output terminals.
2. When the maximum number of CompoBus/S units is set to 16, IN8 to IN15 and OUT8 to OUT15 cannot be used.
3. Each Active Slave Flag is turned ON when the corresponding Slave is participating in communications. When the power to the CPU Unit is turned OFF and ON again all of the Active Slave Flags are turned OFF.
4. Each Slave Communications Error Flag is turned ON when a Slave that was participating in the network is separated from the network. The bit is turned OFF when the Slave re-enters the network.
5. An error is not generated at the CPM2C-S if there are duplicated node address settings for Slaves or if there is a communications error, such as communications failure or a disconnection. Therefore, use the above status flags in the ladder program to confirm whether or not node addresses are set correctly, and whether or not Slaves are operating correctly.

Example

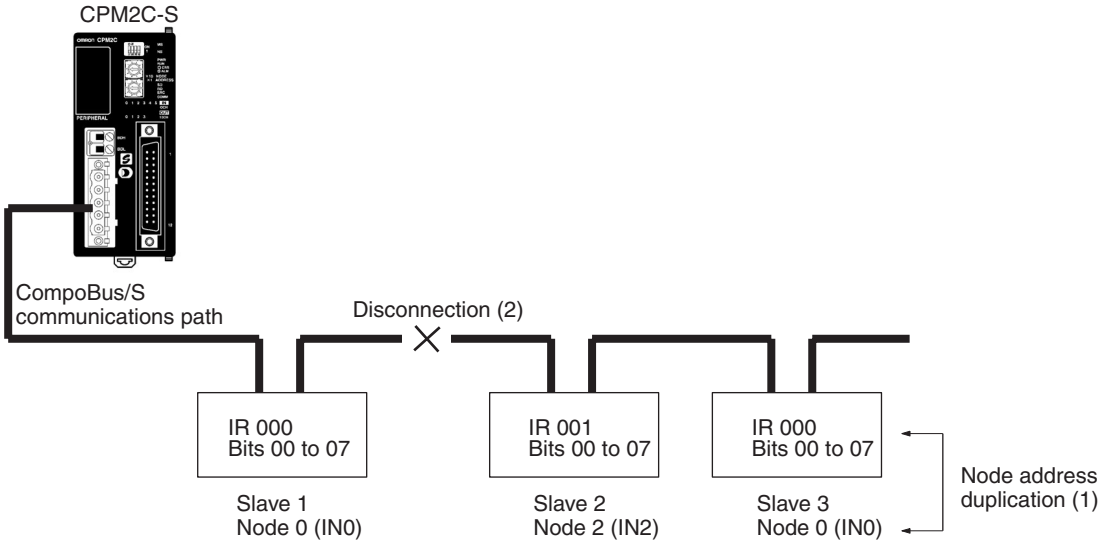

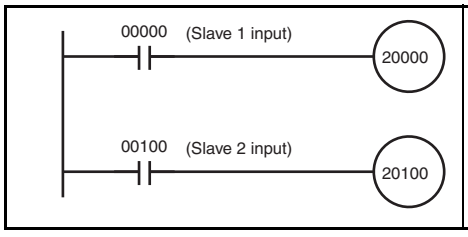

If the addresses for Slave 1 and Slave 3 are the same, the Master will not be able to read input from Slave 3.
If a communications error is generated, the status of IR 00100 will be the same as before the error and so the change in the status of the actual input will not be detected.

- Example of Countermeasure in Ladder Program

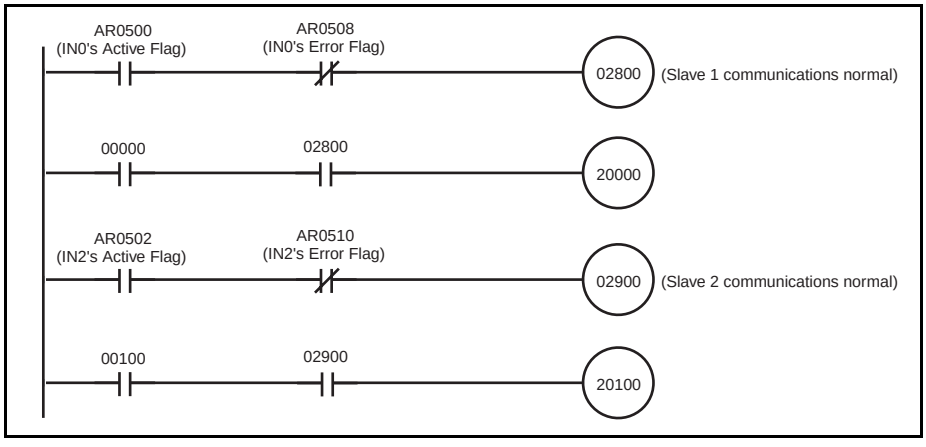

SECTION 6
Exchanging Data with a DeviceNet Master

This section explains how to exchange data with a CPM2C-S100C-DRT or CPM2C-S110C-DRT DeviceNet Master. Refer to this section when using remote I/O communications or explicit message communications from a DeviceNet Master.

6-1 Initial Settings 118
- 6-1-1 Setting the Node Number 118
- 6-1-2 Setting the Communications Speed 118
- 6-1-3 Attaching Status Information 118

6-2 Remote I/O Communications 118

6-3 Explicit Message Communications. 121
- 6-3-1 DeviceNet Explicit Message Functions 121
- 6-3-2 Command and Response Formats 122
- 6-3-3 Examples of DeviceNet Explicit Messages 128

6-4 Status Information. 135
- 6-4-1 LED Indicators 135
- 6-4-2 AR Area Flags indicating DeviceNet Status. 136
- 6-4-3 CPM2C-S Status Output to DeviceNet. 136

6-1 Initial Settings

6-1-1 Setting the Node Number

Set the DeviceNet node number with the rotary switches on the front of the Unit. The allowed setting range is 00 to 63; node number settings 64 to 99 are not allowed. The rotary switch settings are read when the Unit's power is turned ON.

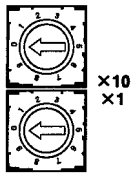

6-1-2 Setting the Communications Speed

Set the DeviceNet communications speed with DIP switch 2 on the front of the Unit. The DIP switch settings are read when the Unit's power is turned ON.

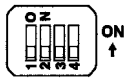

DIP switch 2 settings		DeviceNet communications speed	Maximum total communications distance
Pin 1	Pin 2		
OFF	OFF	125 kbps	500 m max.
ON	OFF	250 kbps	250 m max.
OFF	ON	500 kbps	100 m max.
ON	ON	Not used.	---

6-1-3 Attaching Status Information

It is possible to enable and disable the attachment of the CPM2C-S status information in transmissions from the CPM2C-S to the Master Unit.

The status attachment is set in DM 6605 of the PC Setup, as shown in the following table. The initial setting is 0 (attach status information); change this setting to 1 to disable attachment of status information. Refer to *6-4 Status Information* for details on the status information.

Word	Bits	Function	Default
DM 6605	04 to 07	Sets whether CPM2C-S status is transmitted to the DeviceNet Master. 0 (Hex): Attach status ahead of data. 1 (Hex): Do not attach status ahead of data.	0 (Attach status.)

6-2 Remote I/O Communications

Allocate the DeviceNet read and write areas to specify what part of the PC's data area will be used to read and write data from the DeviceNet Master Unit. Specify the PC data area, starting word address, and number of bytes. Up to 64 bytes can be allocated for DeviceNet remote I/O.

Allocating Read/Write Areas with the PC Setup

Switch the CPM2C-S to PROGRAM mode and use a Programming Device, such as a Programming Console or Support Software, to make the following settings in DM 6605 to DM 6609 of the PC Setup. The settings in these words are read only when the CPM2C-S is turned ON, so the PC's power must be turned OFF and then ON again to make changes effective.

Word	Bits	Function		Default
DM 6605	00 to 03	DeviceNet Read/Write area setting 0 (Hex): Read (IN) IR 020 to IR 027; Write (OUT) IR 030 to IR 037 1 (Hex): Use settings in DM 6606 to DM 6609.		0 (Hex)
	04 to 07	Transmission of CPM2C-S status to the DeviceNet Master 0 (Hex): Attach status information ahead of data. 1 (Hex): Do not attach status information ahead of data.		0 (Hex)
	08 to 15	Not used.		0 (Hex)
DM 6606	00 to 07	DeviceNet I/O Link Write (OUT) area settings (Master → CPM2C-S)	Data area 01 (Hex): I/O area 1 (IR 000 to IR 049) 02 (Hex): I/O area 2 (IR 200 to IR 227) 03 (Hex): DM area (DM 0000 to DM 2047) 04 (Hex): LR area (LR 00 to LR 15) 05 (Hex): HR area (HR 00 to HR 19) 07 (Hex): Timer/counter area (TC 000 to TC 255)	00 (Hex)
	08 to 15		Number of bytes (see note 1) 01 to 40 (Hex) (equivalent to 0 to 64 decimal)	00 (Hex)
DM 6607	00 to 15		Starting word address 0000 to 07FF (Hex) (equivalent to 0000 to 2047 decimal)	0000 (Hex)
DM 6608	00 to 07	DeviceNet I/O Link Read (IN) area settings (CPM2C-S → Master)	Data area 01 (Hex): I/O area 1 (IR 000 to IR 049) 02 (Hex): I/O area 2 (IR 200 to IR 227) 03 (Hex): DM area (DM 0000 to DM 2047) 04 (Hex): LR area (LR 00 to LR 15) 05 (Hex): HR area (HR 00 to HR 19) 06 (Hex): AR area (AR 00 to AR 23) 07 (Hex): Timer/counter area (TC 000 to TC 255)	00 (Hex)
	08 to 15		Number of bytes (see note 1) 01 to 40 (Hex) (equivalent to 0 to 64 decimal)	00 (Hex)
DM 6609	00 to 15		Starting word address 0000 to 07FF (Hex) (equivalent to 0000 to 2047 decimal)	0000 (Hex)

Note

1. A system failure error (PC Setup setting error) will occur if the number of bytes is set to 00 (Hex) for both the write and read areas.
2. Data written through DeviceNet is valid even if the PC is in PROGRAM mode, so outputs may go ON when the PC is in PROGRAM mode if output bits are allocated to the DeviceNet I/O Link Write area. To prevent outputs from going ON while the PC is in PROGRAM mode, do not allocate output bits directly to the DeviceNet I/O Link Write area.
3. If words in any areas other than the IR area (IR 000 to IR 227) or LR area (LR 00 to LR 15) are allocated to the I/O Link Read area, the data may not be cleared even when the power is interrupted, possibly causing data from immediately before power interruption to be read by the master. If this creates a potential problem, use the following measures to eliminate the problem.
   - When starting in RUN or MONITOR mode, configure the ladder program so that the Read area is rewritten with appropriate data.
   - When starting in PROGRAM mode, it will not be possible to take direct measures at the slave. Monitor the status at the master and do not read the data when the operating mode is PROGRAM mode.

   When a fatal error occurs at a slave, the master may read data from immediately before the error. In this case also, monitor the status at the master and do not read the data.

Allocating Read/Write Areas with the DeviceNet Configurator

An OMRON DeviceNet Configurator (version 2.0 or higher) can be used to specify the DeviceNet Read and Write areas. Contact your OMRON representative if you are using a Configurator version earlier than 2.0. (The version can be displayed in the Configurator's *Help* menu.)

1,2,3...

1. Connect the DeviceNet Configurator to the DeviceNet network and switch to online operation.
2. Turn ON the CPM2C-S power supply and put the PC in PROGRAM mode.
3. Click the Upload Button.
4. Double-click the CPM2C-S to be set on the DeviceNet Configurator's device list.
5. The DeviceNet Parameters Window will be displayed to edit the read and write area parameters. Double-click the read/write area parameters to be changed.

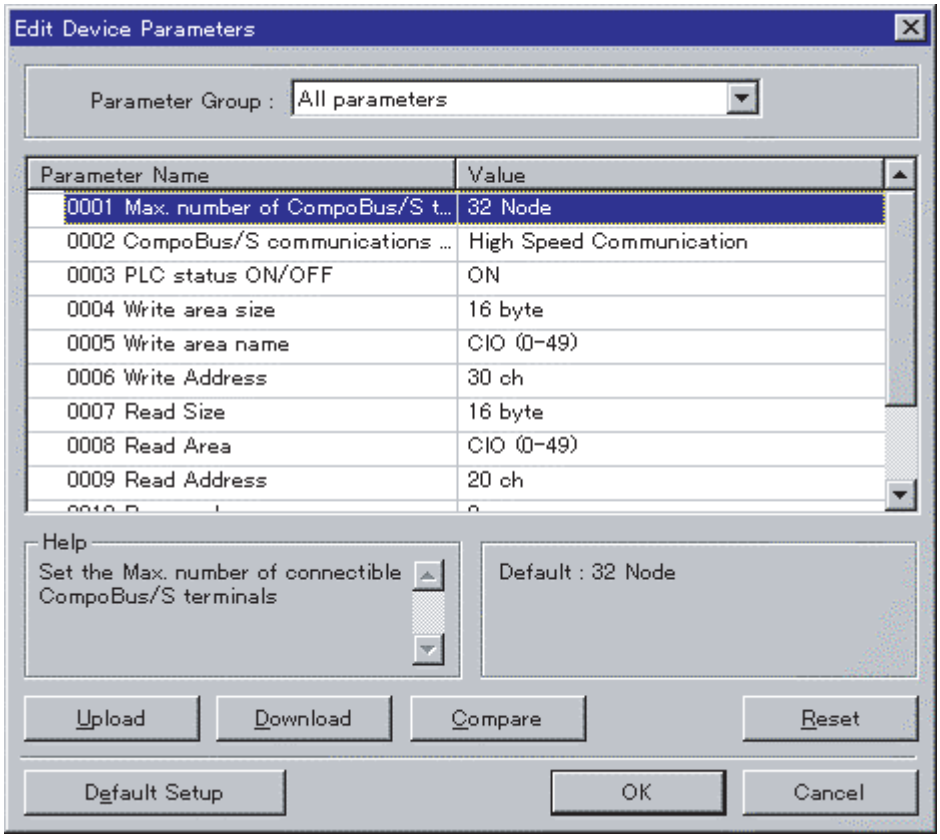

6. Change the parameters as shown in the following example.
   a) Double-click the parameter to be changed.

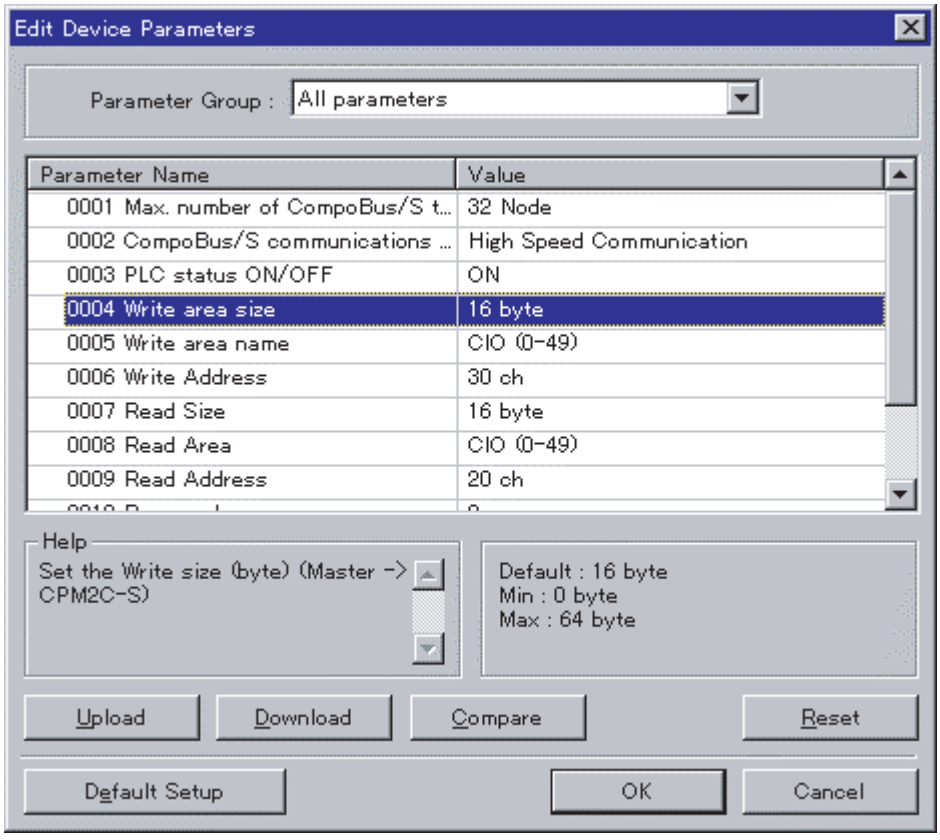

   b) Enter the desired value and press the Enter Key.
7. When all parameters are set as required, click the Download Button.
8. After the download has been completed, click the OK Button to return to the list display.

6-3 Explicit Message Communications

6-3-1 DeviceNet Explicit Message Functions

Explicit message communications use a command/response protocol. The CPM2C-S returns responses to commands sent from the Master, allowing CPM2C-S data areas to be read or written from the Master.

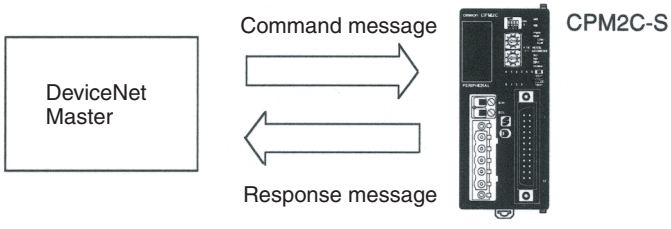

Explicit Message List

Explicit message	Function	Page
READ BYTE DATA	Reads the specified node's data in byte-units from the DeviceNet Master. When word data is being read, the leftmost byte is read before the rightmost byte. Up to 200 bytes can be read at one time.	122
WRITE BYTE DATA	Writes data from the DeviceNet Master to the specified node's data area in byte-units. When word data is being written, the leftmost byte is written before the rightmost byte. Up to 200 bytes can be written at one time.	124
READ WORD DATA	Reads the specified node's data in word-units (two-byte units) from the DeviceNet Master. When word data is being read, the leftmost byte is read before the rightmost byte. Up to 100 words can be read at one time.	125
WRITE WORD DATA	Writes data from the DeviceNet Master to the specified node's data area in word-units (two-byte units). When word data is being written, the leftmost byte is written before the rightmost byte. Up to 100 words can be written at one time.	126
ERROR RESPONSE	The CPM2C-S returns an error response when there is an error in the explicit message command sent from the DeviceNet Master.	128

Note

1. When sending explicit message commands, the range of data specified by the data area, starting address, and number of bytes must not exceed the range of the CPM2C-S data area.
2. Use the READ BYTE DATA and WRITE BYTE DATA commands when sending explicit message commands from an OMRON DeviceNet Master.

   Use the READ WORD DATA and WRITE WORD DATA commands when sending explicit message commands from another company's DeviceNet Master.
3. The number of bytes occupied by the "Class ID" and "Instance ID" parameters varies from Master to Master. These parameters are specified in 2 bytes (4 digits) in commands sent from OMRON DeviceNet Masters. (CV-series PCs use the CMND instruction and C200HX/HG/HE PCs use the IOWR instruction.)

6-3-2 Command and Response Formats

READ BYTE DATA

Reads the specified node's data in byte-units from the DeviceNet Master. When word data is being read, the leftmost byte is read before the rightmost byte. Up to 200 bytes can be read at one time.

Command Format

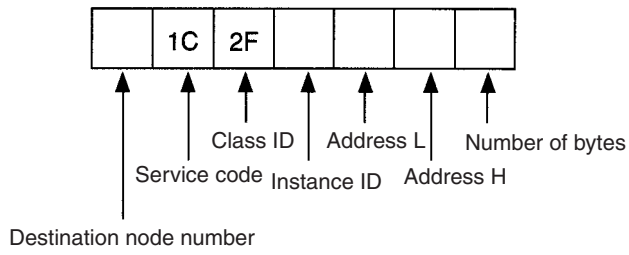

Response Format

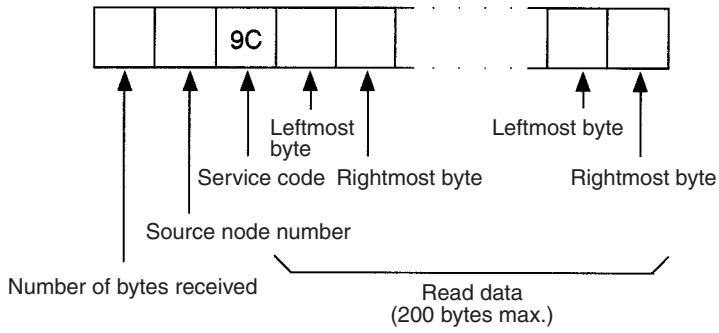

Parameters

Destination node number (command)
Specify the node number of the CPM2C-S containing the desired data in 1 byte (2-digit hexadecimal).

Service code (command, response)
Specify 1C (Hex) in the command.
The leftmost bit of the service code is turned ON in the response, so 9C (Hex) is returned.

Class ID (command)
Always 2F (Hex).

Instance ID (command)
Specify the data area containing the desired data in 1 byte (2-digit hexadecimal). Use one of the codes listed in the following table.

Code	Area name	Address range
01 (Hex)	IR area	IR 000 to IR 049
02 (Hex)	IR area	IR 200 to IR 227
03 (Hex)	DM area	DM 0000 to DM 2047
04 (Hex)	LR area	LR 00 to LR 15
05 (Hex)	HR area	HR 00 to HR 19
06 (Hex)	AR area	AR 00 to AR 23 (read area only)
07 (Hex)	Timer/Counter area	TC 000 to TC 255

Address L and Address H (command)
Specify the starting word address of the read data in hexadecimal as follows:

Address L: The rightmost two digits of the 4-digit starting address.
Address H: The leftmost two digits of the 4-digit starting address.

Number of bytes (command)
Specify the number of bytes of data to read in 1 byte (2-digit hexadecimal). The allowed range is 01 to C8 (Hex), which is equivalent to 1 to 200 decimal.

Number of bytes received (response)
Indicates the number of bytes of data (in hexadecimal) from the “source node number” on.

Source node number (response)
Indicates the node number (in hexadecimal) of the CPM2C-S that returned the response.

Read data (response)
Contains the desired data read from the specified data area. Word data is returned with the leftmost byte (bits 8 to 15) preceding the rightmost byte (bits 0 to 7). If an odd number was specified in the command’s “number of bytes” parameter, the last byte of read data will contain the leftmost byte of a word.

Precautions

The range of data specified by the data area (instance ID), starting address (Address L and Address H), and number of bytes parameters must not exceed the range of the CPM2C-S data area.

WRITE BYTE DATA

Writes data from the DeviceNet Master to the specified node's data area in byte-units. When word data is being written, the leftmost byte is written before the rightmost byte. Up to 200 bytes can be written at one time.

Command Format

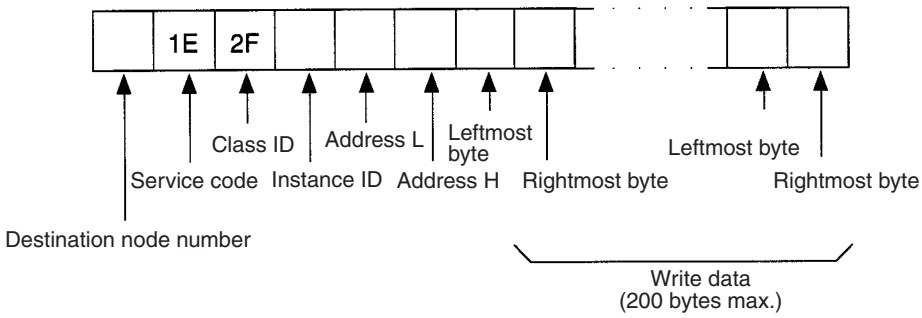

Response Format

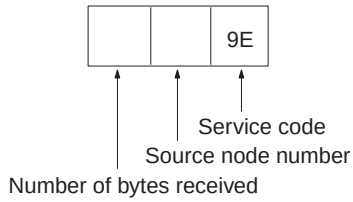

Parameters

Destination node number (command)

Specify the node number of the CPM2C-S where the data will be written. Specify the node number in 1 byte (2-digit hexadecimal).

Service code (command, response)

Specify 1E (Hex) in the command.
The leftmost bit of the service code is turned ON in the response, so 9E (Hex) is returned.

Class ID (command)

Always 2F (Hex).

Instance ID (command)

Specify the data area where data will be written. Specify one of the codes listed in the following table in 1 byte (2-digit hexadecimal).

Code	Area name	Address range
01 (Hex)	IR area	IR 000 to IR 049
02 (Hex)	IR area	IR 200 to IR 227
03 (Hex)	DM area	DM 0000 to DM 2047
04 (Hex)	LR area	LR 00 to LR 15
05 (Hex)	HR area	HR 00 to HR 19
07 (Hex)	Timer/Counter area	TC 000 to TC 255

Address L and Address H (command)

Specify the starting word address where data will be written. Specify the address in hexadecimal as follows:

Address L: The rightmost two digits of the 4-digit starting address.
Address H: The leftmost two digits of the 4-digit starting address.

Write data (command)
Contains the data that will be written in the specified data area. Input word data with the leftmost byte (bits 8 to 15) preceding the rightmost byte (bits 0 to 7). If the command contains an odd number of bytes of write data, the last byte will be written to the leftmost byte of the last word.

Number of bytes received (response)
Indicates the number of bytes of data (in hexadecimal) from the "source node number" on.

Source node number (response)
Indicates the node number (in hexadecimal) of the CPM2C-S that returned the response.

Precautions
The range of data specified by the data area (instance ID), starting address (Address L and Address H), and write data parameters must not exceed the range of the CPM2C-S data area.

READ WORD DATA

Reads the specified node's data in word-units (two-byte units) from the DeviceNet Master. When word data is being read, the leftmost byte is read before the rightmost byte. Up to 100 words can be read at one time.

Command Format

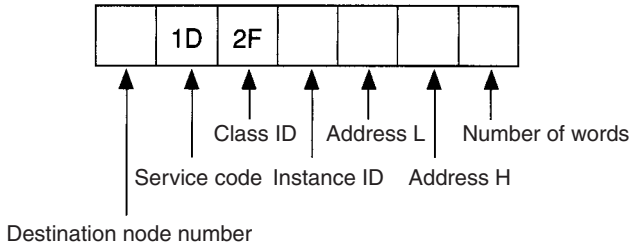

Response Format

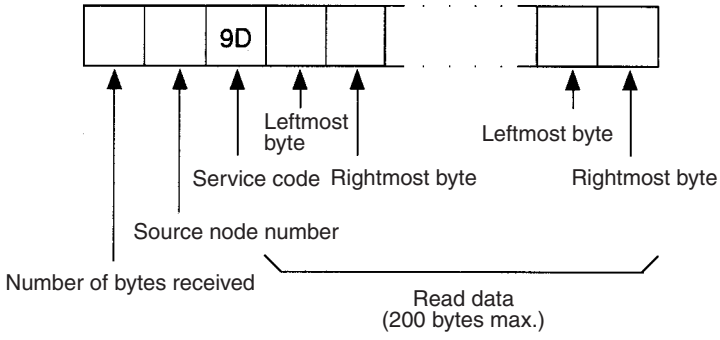

Parameters

Destination node number (command)
Specify the node number of the CPM2C-S containing the desired data in 1 byte (2-digit hexadecimal).

Service code (command, response)
Specify 1D (Hex) in the command.
The leftmost bit of the service code is turned ON in the response, so 9D (Hex) is returned.

Class ID (command)
Always 2F (Hex).

Instance ID (command)
Specify the data area containing the desired data in 1 byte (2-digit hexadecimal). Use one of the codes listed in the following table.

Code	Area name	Address range
01 (Hex)	IR area	IR 000 to IR 049
02 (Hex)	IR area	IR 200 to IR 227
03 (Hex)	DM area	DM 0000 to DM 2047
04 (Hex)	LR area	LR 00 to LR 15
05 (Hex)	HR area	HR 00 to HR 19
06 (Hex)	AR area	AR 00 to AR 23 (read area only)
07 (Hex)	Timer/Counter area	TC 000 to TC 255

Address L and Address H (command)
Specify the starting word address of the read data in hexadecimal as follows:

Address L: The rightmost two digits of the 4-digit starting address.
Address H: The leftmost two digits of the 4-digit starting address.

Number of words (command)
Specify the number of words of data to read in 1 byte (2-digit hexadecimal). The allowed range is 01 to 64 (Hex), which is equivalent to 1 to 100 decimal.

Number of bytes received (response)
Indicates the number of bytes of data (in hexadecimal) from the “source node number.”

Source node number (response)
Indicates the node number (in hexadecimal) of the CPM2C-S that returned the response.

Read data (response)
Contains the desired data read from the specified data area. Word data is returned with the leftmost byte (bits 8 to 15) preceding the rightmost byte (bits 0 to 7).

Precautions
The range of data specified by the data area (instance ID), starting address (Address L and Address H), and number of words parameters must not exceed the range of the CPM2C-S data area.

WRITE WORD DATA

Writes data from the DeviceNet Master to the specified node’s data area in word-units (two-byte units). When word data is being written, the leftmost byte is written before the rightmost byte. Up to 100 words can be written at one time.

Command Format

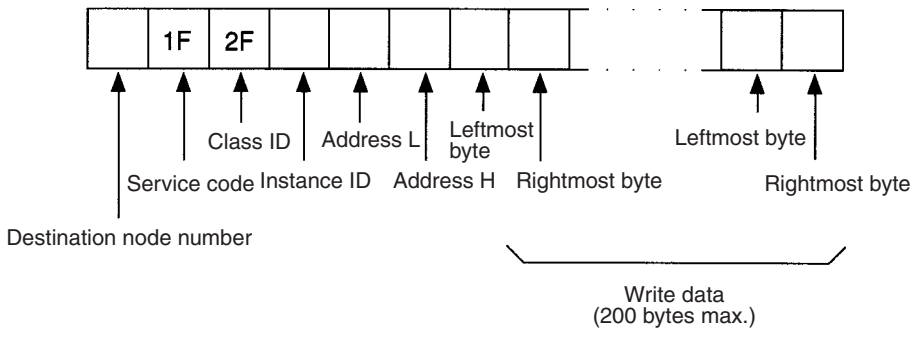

Response Format

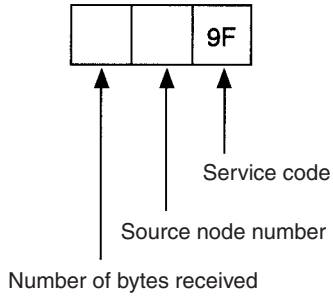

Parameters

Destination node number (command)
Specify the node number of the CPM2C-S where the data will be written. Specify the node number in 1 byte (2-digit hexadecimal).

Service code (command, response)
Specify 1F (Hex) in the command.
The leftmost bit of the service code is turned ON in the response, so 9F (Hex) is returned.

Class ID (command)
Always 2F (Hex).

Instance ID (command)
Specify the data area where data will be written. Specify one of the codes listed in the following table in 1 byte (2-digit hexadecimal).

Code	Area name	Address range
01 (Hex)	IR area	IR 000 to IR 049
02 (Hex)	IR area	IR 200 to IR 227
03 (Hex)	DM area	DM 0000 to DM 2047
04 (Hex)	LR area	LR 00 to LR 15
05 (Hex)	HR area	HR 00 to HR 19
07 (Hex)	Timer/Counter area	TC 000 to TC 255

Address L and Address H (command)
Specify the starting word address where data will be written. Specify the address in hexadecimal as follows:

Address L: The rightmost two digits of the 4-digit starting address.
Address H: The leftmost two digits of the 4-digit starting address.

Write data (command)
Contains the data that will be written in the specified data area. Input word data with the leftmost byte (bits 8 to 15) preceding the rightmost byte (bits 0 to 7).

Number of bytes received (response)
Indicates the number of bytes of data (in hexadecimal) from the “source node number” on.

Source node number (response)
Indicates the node number (in hexadecimal) of the CPM2C-S that returned the response.

Precautions
The range of data specified by the data area (instance ID), starting address (Address L and Address H), and write data parameters must not exceed the range of the CPM2C-S data area.

ERROR RESPONSE

The CPM2C-S returns an error response when there is an error in the explicit message command sent from the DeviceNet Master.

Response Format

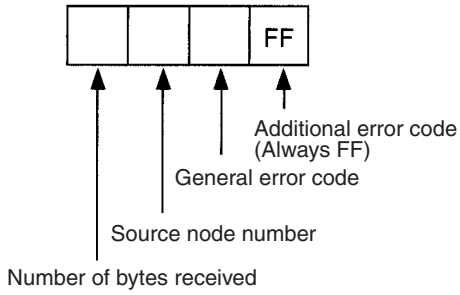

Parameters

Number of bytes received (response)
Indicates the number of bytes of data (in hexadecimal) from the "source node number."

Source node number (response)
Indicates the node number (in hexadecimal) of the CPM2C-S that returned the response.

General error code (response)
Indicates the nature of the error with one of the 1-byte (2-digit hexadecimal) error codes listed in the following table.

Code	Error name	Meaning
08 (Hex)	Service not supported	The service code was invalid.
15 (Hex)	Too much data	There was too much data. (For example, the amount of write data exceeded the data area boundary.)
13 (Hex)	Not enough data	There was too little data. (For example, an odd number of bytes of write data were used in a WRITE WORD DATA command.)
20 (Hex)	Invalid parameter	The starting word address was invalid.
11 (Hex)	Reply data too large	The data area boundary was exceeded in a DATA READ command.
16 (Hex)	Object does not exist	The class ID or instance ID was invalid.

Additional error code (response)

Always FF (Hex).

6-3-3 Examples of DeviceNet Explicit Messages

CS/CJ, CVM1, and CV-series PCs: Reading Data with CMND(194)

This example shows the instruction operands and results when 20 words of data (IR 010 to IR029) in a Slave are read through a Master mounted in a CS/CJ, CVM1 or CV-series PC.

For details on explicit messages, refer to the *CS/CJ Series DeviceNet Units Operation Manual* (W380) for CS/CJ-series PCs, and refer to the *DeviceNet Operation Manual* (W267) for CVM1 and CV-series PCs. For details on CMND(194), refer to the *CS Series Programmable Controllers Operation Manual* (W339) for CS-series PCs, and refer to the *CVM1/CV Series CV500/CV1000/CV2000/CVM1 Programmable Controllers Operation Manual: Ladder Diagrams* (W202) for CVM1 and CV-series PCs.

Example Network Conditions

Master's node number: 63
Slave's network address: 1
Slave's node number: 2

CMND(194) Operand Details

[CMND S D C]

- Command Words

Word	Contents (Hex)	Function
S	28 01	EXPLICIT MESSAGE SEND command code = 2801 (Hex)
S+1	02 1C	Slave node number = 02 (Hex) READ BYTE DATA command service code = 1C (Hex)
S+2	00 2F	Class ID = 002F (Hex)
S+3	00 01	Instance ID = 0001 (Hex) specifies data area
S+4	0A 00	Starting read address = 000A (Hex) specifies IR 010 Address L = 0A (Hex); Address H = 00 (Hex)
S+5	28 00	Number of bytes = 28 (Hex) specifies 40 bytes (The rightmost byte of S+5 is not used.)

- Response Words
  (The results are stored as follows.)

Word	Contents (Hex)	Function
D	28 01	EXPLICIT MESSAGE SEND command code = 2801 (Hex)
D+1	00 00	Normal completion code = 0000 (Hex)
D+2	00 2A	Number of bytes received = 2A (Hex) indicates 42 bytes (This is the number of bytes from D+3 to the end.)
D+3	02 9C	Slave's node number = 02 (Hex) READ BYTE DATA response service code = 9C (Hex)
D+4 to D+23	HH LL : HH LL	These words contain the data read from slave words IR 010 to IR 029. When the READ BYTE DATA command is executed from an OMRON Master, the bytes are stored in the same order (HH LL) in which they were stored in the Slave.

- Control Words

Word	Contents (Hex)	Function
C	00 0B	Number of bytes of command data beginning with word S = 0B (Hex) specifies 11 bytes
C+1	00 30	Number of bytes of response data beginning with word D = 30 (Hex) specifies 48 bytes
C+2	00 01	Destination network address = 01 (Hex)
C+3	3F FE	Master's node number = 3F (Hex) specifies 63 Master's unit address = FE (Hex) specifies the local Unit
C+4	00 00	Response required Transmission port number = 00 (Hex) specifies 0 Number of retries = 00 (Hex) specifies 0
C+5	00 64	Response monitoring time = 64 (Hex) specifies 10.0 seconds

CS/CJ, CVM1, and CV-series PCs: Writing Data with CMND(194)

This example shows the instruction operands and results when 20 words of data are written through a Master mounted in a CS/CJ, CVM1, or CV-series PC to words IR 010 to IR 029 in a Slave.

For details on explicit messages, refer to the *CS/CJ Series DeviceNet Units Operation Manual* (W380) for CS/CJ-series PCs, and refer to the *DeviceNet Operation Manual* (W267) for CVM1 and CV-series PCs. For details on CMND(194), refer to the *CS Series Programmable Controllers Operation Manual* (W339) for CS-series PCs, and refer to the *CVM1/CV Series CV500/CV1000/CV2000/CVM1 Programmable Controllers Operation Manual: Ladder Diagrams* (W202) for CVM1 and CV-series PCs.

Example Network Conditions

Master's node number: 63
Slave's network address: 1
Slave's node number: 2

CMND(194) Operand Details

[CMND S D C]

- Command Words

Word	Contents (Hex)	Function
S	28 01	EXPLICIT MESSAGE SEND command code = 2801 (Hex)
S+1	02 1C	Slave node number = 02 (Hex) WRITE BYTE DATA command service code = 1E (Hex)
S+2	00 2F	Class ID = 002F (Hex)
S+3	00 01	Instance ID = 0001 (Hex) specifies data area
S+4	0A 00	Starting write address = 000A (Hex) specifies IR 010 Address L = 0A (Hex); Address H = 00 (Hex)
S+5 to S+24	HH LL : HH LL	These words contain the data to be written to slave words IR 010 to IR 029. When the WRITE BYTE DATA command is executed from an OMRON Master, the bytes are written to the Slave in the same order (HH LL) in which they appear in the Master.

- Response Words
  (The results are stored as follows.)

Word	Contents (Hex)	Function
D	28 01	EXPLICIT MESSAGE SEND command code = 2801 (Hex)
D+1	00 00	Normal completion code = 0000 (Hex)
D+2	00 02	Number of bytes received = 02 (Hex) indicates 2 bytes (This is the number of bytes from D+3 to the end.)
D+3	02 9C	Slave's node number = 02 (Hex) WRITE BYTE DATA response service code = 9E (Hex)

- Control Words

Word	Contents (Hex)	Function
C	00 32	Number of bytes of command data beginning with word S = 32 (Hex) specifies 50 bytes
C+1	00 08	Number of bytes of response data beginning with word D = 08 (Hex) specifies 8 bytes
C+2	00 01	Destination network address = 01 (Hex)
C+3	3F FE	Master's node number = 3F (Hex) specifies 63 Master's unit address = FE (Hex) specifies the local Unit
C+4	00 00	Response required Transmission port number = 00 (Hex) specifies 0 Number of retries = 00 (Hex) specifies 0
C+5	00 64	Response monitoring time = 64 (Hex) specifies 10.0 seconds

C200HX/HG/HE PCs: Reading Data with IOWR(––)

This example shows the instruction operands and results when 20 words of data (IR 010 to IR029) in a Slave are read through a Master mounted in a C200HX/HG/HE PC and stored in words DM 2000 to DM 2019.

Refer to the *DeviceNet Masters Operation Manual* (W379) for details on explicit messages and refer to the *C200HX/HG/HE Programmable Controllers Operation Manual* (W303) for details on IOWR(—).

Example Network Conditions

The Master's node number is 63, the Slave's network address is 0, and the Slave's node number is 2.

IOWR(––) Operand Details

[IOWR C S D]

- Control Code

Word	Contents (Hex)	Function
C	3F FE	Master's node number = 3F (Hex) specifies 63 Master's unit address = FE (Hex) specifies the local Unit

- Command Words (Source information)

Word	Contents (Hex)	Function
S	82 07	Specifies starting response word = DM 2000 82 (Hex) specifies the DM area 07D0 (Hex) specifies address 2000 (Refer to the *C200HX/HG/HE Operation Manual* (W303) for details.)
S+1	D0 00	
S+2	00 64	Response monitoring time = 64 (Hex) specifies 10.0 seconds
S+3	00 0B	Number of bytes of command data beginning with word S+4 = 0B (Hex) specifies 11 bytes
S+4	28 01	EXPLICIT MESSAGE SEND command code = 2801 (Hex)
S+5	02 1C	Slave node number = 02 (Hex) READ BYTE DATA command service code = 1C (Hex)
S+6	00 2F	Class ID = 002F (Hex)
S+7	00 01	Instance ID = 0001 (Hex) specifies data area
S+8	0A 00	Starting read address = 000A (Hex) specifies IR 010 Address L = 0A (Hex); Address H = 00 (Hex)
S+9	28 00	Number of bytes = 28 (Hex) specifies 40 bytes (The rightmost byte of S+5 is not used.)

- Destination Information

Word	Contents (Hex)	Function
D	00 10	Master Unit's unit number = 00 Number of words of command data beginning with word S = 10 (BCD) specifies 10 words

- Response Words (The results are stored as follows.)

Word	Contents (Hex)	Function
DM 2000	28 01	EXPLICIT MESSAGE SEND command code = 2801 (Hex)
DM 2001	00 00	Normal completion code = 0000 (Hex)
DM 2002	00 2A	Number of bytes received = 2A (Hex) indicates 42 bytes (This is the number of bytes from D+3 to the end.)
DM 2003	02 9C	Slave's node number = 02 (Hex) READ BYTE DATA response service code = 9C (Hex)
DM 2004 to DM 2023	HH LL : HH LL	These words contain the data read from slave words IR 010 to IR 029. When the READ BYTE DATA command is executed from an OMRON Master, the bytes are stored in the same order (HH LL) in which they were stored in the Slave.

C200HX/HG/HE PCs: Writing Data with IOWR(––)

This example shows the instruction operands and results when 20 words of data are written from a Master mounted in a C200HX/HG/HE PC to words IR 010 to IR029 in a Slave.

Refer to the *DeviceNet Masters Operation Manual* (W379) for details on explicit messages and refer to the *C200HX/HG/HE Programmable Controllers Operation Manual* (W303) for details on IOWR(—).

Example Network Conditions

Master's node number: 63
Slave's network address: 0
Slave's node number: 2

IOWR(––) Operand Details

[IOWR C S D]

• Control Code

Word	Contents (Hex)	Function
C	3F FE	Master's node number = 3F (Hex) specifies 63 Master's unit address = FE (Hex) specifies the local Unit

• Command Words (Source Information)

Word	Contents (Hex)	Function
S	82 07	Specifies starting response word = DM 2000
S+1	D0 00	82 (Hex) specifies the DM area 07D0 (Hex) specifies address 2000 (Refer to the *C200HX/HG/HE Operation Manual* (W303) for details.)
S+2	00 64	Response monitoring time = 64 (Hex) specifies 10.0 seconds
S+3	00 0B	Number of bytes of command data beginning with word S+4 = 32 (Hex) specifies 50 bytes
S+4	28 01	EXPLICIT MESSAGE SEND command code = 2801 (Hex)
S+5	02 1E	Slave node number = 02 (Hex) WRITE BYTE DATA command service code = 1E (Hex)
S+6	00 2F	Class ID = 002F (Hex)
S+7	00 01	Instance ID = 0001 (Hex) specifies data area
S+8	0A 00	Starting write address = 000A (Hex) specifies IR 010 Address L = 0A (Hex); Address H = 00 (Hex)
S+9 to S+28	HH LL : HH LL	These words contain the data to be written to slave words IR 010 to IR 029. When the WRITE BYTE DATA command is executed from an OMRON Master, the bytes are written to the Slave in the same order (HH LL) in which they appear in the Master.

• Destination Information

Word	Contents (Hex)	Function
D	00 29	Master Unit's unit number = 00 Number of words of command data beginning with word S = 29 (BCD) specifies 29 words

• Response Words (The results are stored as follows.)

Word	Contents (Hex)	Function
DM 2000	28 01	EXPLICIT MESSAGE SEND command code = 2801 (Hex)
DM 2001	00 00	Normal completion code = 0000 (Hex)
DM 2002	00 02	Number of bytes received = 02 (Hex) indicates 2 bytes (This is the number of bytes from D+3 to the end.)
DM 2003	02 9E	Slave's node number = 02 (Hex) READ BYTE DATA response service code = 9E (Hex)

C200HW Master in a CS Series PC: Reading Data with IOWR(––)

This example shows the instruction operands and results of the IOWR command when 20 words of data are read from IR 010 to IR 029 in a Slave, and written to response words from DM 2000 to the end in a Master mounted in a CS-series PC.

Refer to the *DeviceNet Masters Unit Operation Manual* (W379) for details on explicit messages, and refer to the *SYSMAC CS/CJ Series Communications Commands Reference Manual* (W342) for details on IOWR(—).

Example Network Conditions

Master's node number: 63
Slave's node number: 2

IOWR(––) Operand Details

[IOWR C S W]

• Control Code

Word	Contents (Hex)	Function
C	3F FE	Master's node number = 3F (Hex) specifies 63 Master's unit address = FE (Hex) specifies the local Unit

• Command Words

Word	Contents (Hex)	Function
S	82 07	Specifies starting response word = DM 2000
S+1	D0 00	82 (Hex) specifies the DM area 07D0 (Hex) specifies address 2000 (Refer to the *CS Series Operation Manual* (W339) for details.)
S+2	00 64	Response monitoring time = 10.0 seconds
S+3	00 0B	Number of bytes of command data beginning with word S+4 = 0B (Hex) specifies 11 bytes
S+4	28 01	EXPLICIT MESSAGE SEND command code = 2801 (Hex)
S+5	02 1C	Slave node number = 02 (Hex) READ BYTE DATA command service code = 1C (Hex)
S+6	00 2F	Class ID = 002F (Hex)
S+7	00 01	Instance ID = 0001 (Hex) specifies data area
S+8	0A 00	Starting read address = 000A (Hex) specifies IR 010 Address L = 0A (Hex); Address H = 00 (Hex)
S+9	28 00	Number of bytes of data to read = 28 (Hex) specifies 40 bytes

• Destination Information

Word	Contents (Hex)	Function
W	00 00	Master Unit's unit number = 00 (Hex) specifies 0
W+1	00 10	Number of words of command data beginning with word S+0 = 10 (BCD) specifies 10 words

• Response Words (The results are stored as follows.)

Word	Contents (Hex)	Function
DM 2000	28 01	EXPLICIT MESSAGE SEND command code = 2801 (Hex)
DM 2001	00 00	Normal completion code = 0000 (Hex)
DM 2002	00 2A	Number of bytes received = 2A (Hex) indicates 42 bytes (This is the number of bytes from D+3 to the end.)
DM 2003	02 9C	Slave's node number = 02 (Hex) READ BYTE DATA response service code = 9C (Hex)
DM 2004	HH LL	These words contain the data to be read from Slave words IR 010 to IR 029. When the READ BYTE DATA command is executed from an OMRON Master, the bytes are written to the Master in the same order (HH LL) in which they appear in the Slave.

C200HW Master in a CS Series PC: Writing Data with IOWR(––)

This example shows the instruction operands and results of the IOWR command when 20 words of data are written from a Master mounted in a CS-series PC to words IR 200 to IR 219 in a Slave.

Refer to the *DeviceNet Masters Unit Operation Manual* (W379) for details on explicit messages, and refer to the *SYSMAC CS/CJ Series Communications Commands Reference Manual* (W342) for details on IOWR(—).

Example Network Conditions

Master's node number: 63
Slave's node number: 2

IOWR(––) Operand Details

[IOWR C S W]

• Control Code

Word	Contents (Hex)	Function
C	3F FE	Master's node number = 3F (Hex) specifies 63 Master's unit address = FE (Hex) specifies the local Unit

• Command Words

Word	Contents (Hex)	Function
S	82 07	Specifies starting response word = DM 2000
S+1	D0 00	82 (Hex) specifies the DM area 07D0 (Hex) specifies address 2000 (Refer to the *CS Series Operation Manual* (W339) for details.)
S+2	00 64	Response monitoring time = 10.0 seconds
S+3	00 32	Number of bytes of command data beginning with word S+4 = 32 (Hex) specifies 50 bytes
S+4	28 01	EXPLICIT MESSAGE SEND command code = 2801 (Hex)
S+5	02 1E	Slave node number = 02 (Hex) WRITE BYTE DATA command service code = 1E (Hex)
S+6	00 2F	Class ID = 002F (Hex)
S+7	00 02	Instance ID = 0002 (Hex) specifies data area 2
S+8	C8 00	Starting write address = 00C8 (Hex) specifies IR 200 Address L = C8 (Hex); Address H = 00 (Hex)
S+9 to S+28	HH LL : HH LL	These words contain the data to be written to Slave words IR 200 to IR 219. When the WRITE BYTE DATA command is executed from an OMRON Master, the bytes are written to the Slave in the same order (HH LL) in which they appear in the Master.

• Destination Information

Word	Contents (Hex)	Function
W	00 00	Master Unit's unit number = 00 (Hex)
W+1	00 29	Number of words of command data beginning with word S+0 = 29 (BCD) specifies 29 words

• Response Words (The results are stored as follows.)

Word	Contents (Hex)	Function
DM 2000	28 01	EXPLICIT MESSAGE SEND command code = 2801 (Hex)
DM 2001	00 00	Normal completion code = 0000 (Hex)
DM 2002	00 02	Number of bytes received = 02 (Hex) indicates 2 bytes (This is the number of bytes from D+3 to the end.)
DM 2003	02 9E	Slave's node number = 02 (Hex) WRITE BYTE DATA response service code = 9E (Hex)

6-4 Status Information

The status of DeviceNet communications is indicated by the CPM2C-S PC's LED indicators and AR area flags. In addition, the PC Setup can be set so that the CPM2C-S PC's operating status information is attached to remote I/O transmissions from the CPM2C-S to the Master Unit.

6-4-1 LED Indicators

The status of DeviceNet communications is indicated on the CPM2C-S PC's LED indicators.

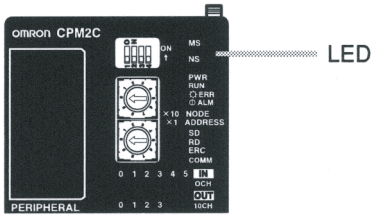

Indicator	Color	Status	Function	Meaning
MS	Green	Lit	Normal status	Normal status
		Flashing	Incomplete settings status	Reading switch settings
	Red	Lit	Fatal error	Hardware error (watchdog timer error)
		Flashing	Non-fatal error	Error such as incorrect switch settings
	---	Not lit	Power is not being supplied.	• Power is not being supplied. • Waiting for initialization to start • Reset in progress
NS	Green	Lit	Online/Communications established	Normal network status when communications have been established
		Flashing	Online/Communications not established	Normal network status when communications haven't been established
	Red	Lit	Fatal communications error	Communications error (The Unit detected an error indicating that network communications are disabled.) • Node number duplication • Bus off error detected
		Flashing	Non-fatal communications error	Communications timeout
	---	Not lit	Offline/Power supply OFF	Waiting for completion of the node number duplication check in the Master. • Incorrect switch settings • Power supply OFF

6-4-2 AR Area Flags indicating DeviceNet Status

The following status information is output to flags in the AR area.

Word	Bit(s)	Function	
AR 00	00	DeviceNet switch settings error (ON when a settings error occurred, OFF when normal.)	
	01	Node number duplication or Bus off error (ON when an error occurred, OFF when normal.)	
	02	DeviceNet network power supply error (ON when an error occurred, OFF when normal.)	
	03	DeviceNet communications error (ON when an error occurred, OFF when normal.)	
	04 to 06	Not used.	
	07	DeviceNet status error (ON when an error occurred, OFF when normal.)	
	08	Explicit Connection Flag	ON: The connection has been established. OFF: The connection has not been established.
	09	Polling Connection Flag	
	10	Bit Strobe Connection Flag	
	11 to 14	Not used.	
	15	I/O Link in progress (ON when the I/O Link is operating, otherwise OFF.)	

6-4-3 CPM2C-S Status Output to DeviceNet

The operating status of the CPM2C-S is transmitted to the Master Unit in two words. The status information is automatically attached as the first two words received at the Master.

The setting in DM 6605 bits 04 to 07 of the PC Setup determines whether or not the status information will be transmitted.

Word	Bits	Function	Default
DM 6605	04 to 07	Sets whether CPM2C-S status is transmitted to the DeviceNet Master. 0 (Hex): Attach status ahead of data. 1 (Hex): Do not attach status ahead of data. (A settings error will occur for any other setting.)	0 (Attach status.)

Transmitted Status Information

<table>
<tr><th>Word</th><th>Bits</th><th>Contents</th></tr>
<tr><td rowspan="8">Leading word</td><td>00 to 07</td><td>The error code (2 digits) that is output to AR 253 bits 00 to 07 is output.</td></tr>
<tr><td>08 and 09</td><td>CPM2C operating mode
<table>
<tr><th>Bit</th><th>09</th><th>08</th></tr>
<tr><td>PROGRAM mode</td><td>0</td><td>0</td></tr>
<tr><td>MONITOR mode</td><td>1</td><td>0</td></tr>
<tr><td>RUN mode</td><td>1</td><td>1</td></tr>
</table></td></tr>
<tr><td>10</td><td>Not used.</td></tr>
<tr><td>11</td><td>UM area write-protection (Mirrors the status of PC Setup setting in DM 6602 bits 00 to 03.)
OFF: UM writable
ON: UM write-protected</td></tr>
<tr><td>12</td><td>Not used.</td></tr>
<tr><td>13</td><td>CompoBus/S communications error (See note 1.)
OFF: Communications normal or not part of network
ON: Disconnected from communications
This bit will automatically be turned OFF if the slave joins the network again or the power supply is turned OFF and ON.</td></tr>
<tr><td>14</td><td>ON when a non-fatal error has occurred.</td></tr>
<tr><td>15</td><td>ON when a fatal error has occurred.</td></tr>
<tr><td rowspan="15">Leading word + 1</td><td>00 to 03</td><td>Not used.</td></tr>
<tr><td>04</td><td>ON when a battery error has occurred.
(Effective only when detection of battery errors is enabled with the PC Setup setting in DM 6655 bits 12 to 15 set to 0.)</td></tr>
<tr><td>05</td><td>ON when a cycle time overrun error has occurred.</td></tr>
<tr><td>06</td><td>Not used.</td></tr>
<tr><td>07</td><td>ON when FAL(06) was executed or a PC Setup settings error has occurred.
(The FAL number is transmitted in bits 00 to 07 of the leading word.)</td></tr>
<tr><td>08</td><td>ON when a memory error has occurred.</td></tr>
<tr><td>09</td><td>ON when there isn’t an END(01) instruction in the program.</td></tr>
<tr><td>10</td><td>Not used.</td></tr>
<tr><td>11</td><td>ON when an I/O Unit over error (too many Units) has been detected.</td></tr>
<tr><td>12 and 13</td><td>Not used.</td></tr>
<tr><td>14</td><td>ON when an I/O bus error has occurred.</td></tr>
<tr><td>15</td><td>ON when FALS(07) was executed.
(The FAL number is transmitted in bits 00 to 07 of the leading word.)</td></tr>
</table>

Note

1. This bit is supported from Units manufactured on June 1, 2009 or later. Refer to page xxii for information on interpreting manufacturing numbers. Use the manufacturing number to confirm that your Unit supports this bit before attempting to use the bit.
2. If words in any areas other than the IR area (IR 000 to IR 227) or LR area (LR 00 to LR 15) are allocated to the I/O Link Read area, the data may not be cleared even when the power is interrupted, possibly causing data from immediately before power interruption to be read by the master. If this creates a potential problem, use the following measures to eliminate the problem.
   - When starting in RUN or MONITOR mode, configure the ladder program so that the Read area is rewritten with appropriate data.
   - When starting in PROGRAM mode, it will not be possible to take direct measures at the slave. Monitor the status at the master and do not read the data when the operating mode is PROGRAM mode.

When a fatal error occurs at a slave, the master may read data from immediately before the error. In this case also, monitor the status at the master and do not read the data.

SECTION 7
Cycle Time and I/O Response Time

This section explains the cycle time and I/O response time in CPM2C-S PCs. Refer to this section when writing the user program to improve operation and reduce response delays.

7-1 Cycle Time 140
- 7-1-1 Cyclic Operation and Interrupts 140
- 7-1-2 Cycle Time and Operations 142
- 7-1-3 Cycle Time Example 142
- 7-1-4 Instruction Execution Times 143

7-2 I/O Response Time 153
- 7-2-1 CPM2C-S I/O Response Time 153
- 7-2-2 I/O Response Time between CompoBus/S Slaves 154

7-3 Interrupt Processing Time 155

7-4 One-to-one PC Link I/O Response Time 156

7-1 Cycle Time

7-1-1 Cyclic Operation and Interrupts

Basic CPU Operation

Initialization is performed when the power is turned ON. If there are no initialization errors, the overseeing processes, program execution, I/O refreshing, and communications port servicing are performed repeatedly (cyclically).

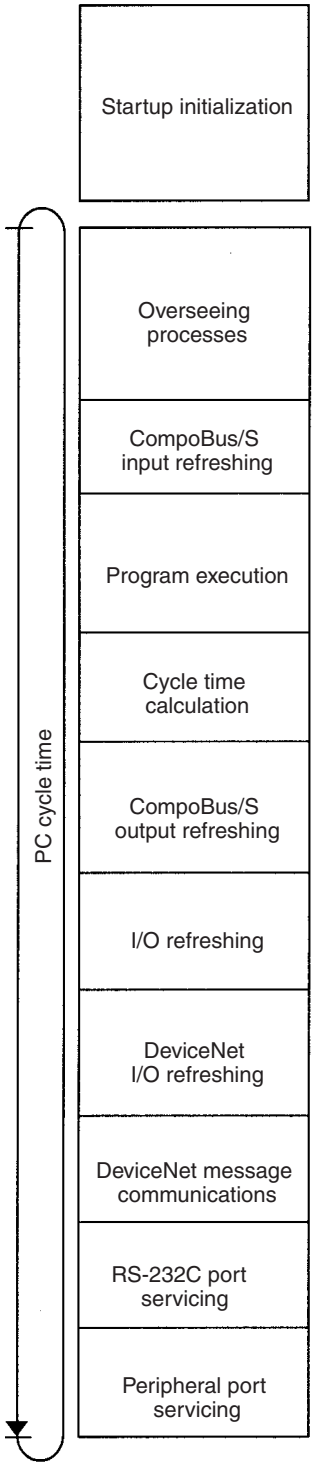

- Check hardware.
- Check memory.
- Read data from flash memory (program, read-only DM data, and PC Setup settings).

- Check for battery error.
- Preset the watch (maximum) cycle time.
- Check program memory.
- Refresh bits for expansion functions.

- Read input data from CompoBus/S Remote I/O Slaves.

- Execute the program. (Refer to the Programming Manual (W353) for details on cycle time and I/O response times.)

- Wait for minimum cycle time if a minimum cycle time has been set in the PC Setup (DM 6619).
- Calculate cycle time.

- Write output data to CompoBus/S Remote I/O Slaves.

- Read input data from input bits.
- Write output data to output bits.

- Exchange I/O data with DeviceNet Master. (CPM2C-S1□0C-DRT versions only)

- Perform explicit message communications with DeviceNet Master. (CPM2C-S1□0C-DRT versions only)

- Perform RS-232C port communications processing. (Can be changed in DM 6616.)

- Perform peripheral port communications processing. (Can be changed in DM 6617.)

Note 1. The cycle time can be read using a Programming Device.

2. The maximum cycle time and current cycle time are stored in AR 14 and AR 15 respectively.
3. The cycle time varies with the processing required and so it is possible that the calculated value and the actual value may not be the same.

Process	Content	Time requirements
Overseeing	Set cycle watchdog timer, check I/O bus, check UM, refresh clock, refresh bits allocated to new functions.	0.3 ms
Wait for completion of CompoBus/S communications	Wait for completion of the CompoBus/S communications started in the CompoBus/S output refreshing process.	---
CompoBus/S input refreshing	Read input data from CompoBus/S Master ASIC.	0.02 ms
Program execution	Execute user program.	Total time for executing instructions. (Varies according to content of user's program.)
Cycle time calculation	Wait until minimum cycle time has elapsed if a minimum cycle time is set in DM 6619 of PC Setup. Calculate of cycle time.	Negligible except for the delay itself when required.
CompoBus/S output refreshing	Write output data to CompoBus/S Master ASIC. Start CompoBus/S communications.	0.05 ms
I/O output refreshing	Write output data (results of executing program) to output bits.	CPM2C-S CPU Unit:0.06 ms Expansion I/O Unit:0.3 ms
I/O input refreshing	Read input data from input bits.	
DeviceNet I/O refreshing	Write output data to DeviceNet interface and read input data.	0.1 ms
RS-232C port servicing	Communications processing when a Programming Device or Communications Adapter is connected to the RS-232C port.	0.55 ms min., 5% or less of cycle time up to 131 ms (The percentage of cycle time allocated to RS-232C servicing can be set in DM 6616.)
Peripheral port servicing	Service device connected to peripheral port when a Programming Device or Adapter is connected.	0.55 ms min., 5% or less of cycle time up to 131 ms (The percentage of cycle time allocated to peripheral port servicing can be set in DM 6617.)
DeviceNet communications servicing	Perform communications processing (explicit message communications) with the DeviceNet Master.	65.536 ms max.

Note

1. The CPM2C-S starts I/O refreshing after CompoBus/S communications are completed. If the cycle time is shorter than the CompoBus/S communications response time, the CPU will wait until CompoBus/S communications are completed before starting I/O refreshing again. In effect, this delay results in a minimum cycle time equivalent to the CompoBus/S communications response time.
2. Even if the CompoBus/S is not used, the cycle time will never be shorter than the CompoBus/S communications response time.
3. The cycle time will be affected if there is a connection to a DeviceNet network (-DRT models only). Adjust the system while connected to the DeviceNet network.

7-1-2 Cycle Time and Operations

The effects of the cycle time on operations are as shown below. When a long cycle time is affecting operation, either reduce the cycle time or improve responsiveness with interrupt programs.

Cycle time	Operation conditions
1 ms or longer	TMHH(—) may be inaccurate when TC 000 through TC 003 or TC 008 through TC 255 are used (operation will be normal for TC 004 through TC 007).
10 ms or longer	TIMH(15) may be inaccurate when TC 004 through TC 255 are used (operation will be normal for TC 000 through TC 003).
20 ms or longer	Programming using the 0.02-second Clock Bit (SR 25401) may be inaccurate.
100 ms or longer	TIM may be inaccurate. Programming using the 0.1-second Clock Bit (SR 25500) may be inaccurate. A CYCLE TIME OVER error is generated (SR 25309 will turn ON).
120 ms or longer	The FALS 9F monitoring time SV is exceeded. A system error (FALS 9F) is generated, and operation stops.
200 ms or longer	Programming using the 0.2-second Clock Bit (SR 25501) may be inaccurate.

7-1-3 Cycle Time Example

In this example, the cycle time is calculated for a Unit. The I/O is configured as follows:

6 inputs: 1 word (00000 to 00005)
4 outputs: 1 word (01000 to 01003)

The rest of the operating conditions are assumed to be as follows:

User's program: 500 instructions (consists of only LD and OUT)
Cycle time: Variable (no minimum set)

The average processing time for a single instruction in the user's program is assumed to be 1.26 μs. The cycle times are as shown in the following table.

Process	Calculation method	Time when peripheral port is used	Time when peripheral port is not used
1. Overseeing	---	0.3 ms	0.3 ms
2. Wait for completion of CompoBus/S communications	---	0	0.5 ms
3. CompoBus/S input refreshing	---	0.02 ms	0.02 ms
4. Program execution	1.26 × 500 (μs)	0.6 ms	0.6 ms
5. Cycle time calculation	---	0	0
6. CompoBus/S output refreshing	---	0.05 ms	0.05 ms
7. I/O refreshing	---	0.06 ms	0.06 ms
8. DeviceNet I/O refreshing	---	0.1 ms	0.1 ms
9. Peripheral port servicing	---	0.55 ms	0
10. RS-232C port servicing	---	0	0
11. DeviceNet communications servicing	---	0	0
Total cycle time	(1) + (2) + (3) + - - - + (11)	1.68 ms	1.63 ms

Note 1. The CompoBus/S communications wait time can be calculated by subtracting the time required for processes 9, 10, 11, and 1 from the CompoBus/S communications response time.

CompoBus/S wait time = CompoBus/S response time – (9) – (10) – (11) – (1)

When the peripheral port is being used in the example above, the calculation result is negative and the CompoBus/S wait time is negligible.

Communications mode	Max. number of nodes setting	CompoBus/S communications response time
High-speed mode	16	0.5 ms
	32	0.8 ms
Long-distance mode	16	4.0 ms
	32	6.0 ms

2. The cycle time can be read from a Programming Device.
3. AR 14 contains the max. cycle time and AR 15 contains the current cycle time.
4. The actual cycle time will vary slightly from the calculated value due to variations in processing from cycle to cycle.

If the cycle time is shorter than the CompoBus/S communications response time, the actual cycle time will be equal to the CompoBus/S communications response time. With short cycle times, the CompoBus/S communications response time will become the minimum cycle time; this is especially true when long-distance mode is being used.

7-1-4 Instruction Execution Times

The following table lists the execution times for CPM2C-S instructions.

Basic Instructions

Code	Mnemonic	ON execution time (µs)	Conditions (Top: min.; bottom: max.)	OFF execution time (µs)		
				RSET	IL	JMP
--- ---	LD LD NOT	0.64	Any	---		
--- --- --- ---	AND AND NOT OR OR NOT	0.52				
--- ---	AND LD OR LD	0.26				
--- ---	OUT OUT NOT	1.88				
---	SET	2.58				
---	RSET					
---	TIM	4.76	Constant for SV	7.8	7.6	2.9
			∗DM for SV	15.6	15.4	2.9
---	CNT	4.50	Constant for SV	6.8	2.9	3.1
			∗DM for SV	14.5	2.9	3.1

Special Instructions

Code	Mnemonic	ON execution time (μs)	Conditions (Top: min.; bottom: max.)	OFF execution time (μs)		
00	NOP	0.15	Any			
01	END	6.2				
02	IL	1.1		2.1		
03	ILC	1.6		1.6		
04	JMP	0.95		1.8		
05	JME	2.1		2.1		
06	FAL	20.5		2.5		
07	FALS	2.9		2.5		
08	STEP	7.3		6.0		
09	SNXT	5.1		3.6		
10	SFT			Reset	IL	JMP
		10.4	With 1-word shift register	9.2	0.98	0.98
		15.3	With 10-word shift register	11.9	1.0	1.0
		39.6	With 53-word shift register	26.2	1.0	1.0
11	KEEP	3.2	Any	Reset	IL	JMP
				3.1	1.2	1.3
12	CNTR			Reset	IL	JMP
		10.9	Constant for SV	7.9	5.5	5.6
		18.8	∗DM for SV			
13	DIFU	5.5	Any	Shift	IL	JMP
				5.1	4.8	0.96
14	DIFD	5.3	Any	Shift	IL	JMP
				5.4	4.7	0.97
15	TIMH			Reset	IL	JMP
		9.0	Regular execution, constant for SV	13.0	12.6	6.1
		9.6	Interrupt execution, constant for SV	14.4	14.0	7.5
		9.8	Regular execution, ∗DM for SV	20.8	20.5	6.1
		10.7	Interrupt execution, ∗DM for SV	22.2	22.0	7.5
16	WSFT	14.0	With 1-word shift register	2.6		
		18.6	With 10-word shift register			
		1.15 ms	With 2,048-word shift register using ∗DM			
17	ASFT	13.0	Shifting 1 word	2.6		
		22.9	Shifting 10 words			
		1.51 ms	Shifting 2,048 words via ∗DM			
20	CMP	7.0	When comparing a constant to a constant	2.6		
		8.3	When comparing two words			
		12.1	When comparing two ∗DM			
21	MOV	7.8	When transferring a constant to a word	2.6		
		8.4	When transferring from one word to another			
		22.8	When transferring ∗DM to ∗DM			
22	MVN	7.9	When transferring a constant to a word	2.6		
		8.4	When transferring from one word to another			
		22.8	When transferring ∗DM to ∗DM			
23	BIN	15.8	When converting a word to a word	2.6		
		30.3	When converting ∗DM to ∗DM			
24	BCD	14.6	When converting a word to a word	2.6		
		29.0	When converting ∗DM to ∗DM			

Code	Mnemonic	ON execution time (μs)	Conditions (Top: min.; bottom: max.)	OFF execution time (μs)
25	ASL	8.6	When shifting a word	2.5
		15.8	When shifting ∗DM	
26	ASR	8.4	When shifting a word	2.5
		15.6	When shifting ∗DM	
27	ROL	7.3	When rotating a word	2.5
		14.5	When rotating ∗DM	
28	ROR	7.3	When rotating a word	2.5
		14.5	When rotating ∗DM	
29	COM	8.9	When inverting a word	2.5
		16.1	When inverting ∗DM	
30	ADD	14.7	Constant + constant → word	2.6
		16.0	Word + word → word	
		37.6	∗DM + ∗DM → ∗DM	
31	SUB	14.6	Constant – constant → word	2.6
		15.8	Word – word → word	
		37.5	∗DM – ∗DM → ∗DM	
32	MUL	26.8	Constant × constant → word	2.6
		28.3	Word × word → word	
		51.0	∗DM × ∗DM → ∗DM	
33	DIV	25.9	Constant ÷ constant → word	2.6
		27.5	word ÷ word → word	
		50.1	∗DM ÷ ∗DM → ∗DM	
34	ANDW	12.3	Constant ∩ constant → word	2.6
		13.8	Word ∩ word → word	
		35.4	∗DM ∩ ∗DM → ∗DM	
35	ORW	12.3	Constant V constant → word	2.6
		13.8	Word V word → word	
		35.4	∗DM V ∗DM → ∗DM	
36	XORW	12.3	Constant ∨ constant → word	2.6
		13.8	Word ∨ word → word	
		35.4	∗DM ∨ ∗DM → ∗DM	
37	XNRW	12.3	Constant $\overline{\vee}$ constant → word	2.6
		13.8	Word $\overline{\vee}$ word → word	
		35.5	∗DM $\overline{\vee}$ ∗DM → ∗DM	
38	INC	8.8	When incrementing a word	2.5
		15.9	When incrementing ∗DM	
39	DEC	8.9	When decrementing a word	2.5
		16.1	When decrementing ∗DM	
40	STC	3.0	Any	2.5
41	CLC	3.0		2.5
46	MSG	9.9	With message in words	2.5
		17.8	With message in ∗DM	
47	RXD	71.9	Word specification, 1 byte input	2.6
		314.5	∗DM specification, 256 bytes input	
48	TXD	32.4	Word specification, 1 byte input, RS-232C	2.6
		264.5	∗DM specification, 256 bytes input, RS-232C	
		27.7	Word specification, 1 byte input, Host Link	
		42.2	∗DM specification, 256 bytes input, Host Link	

Code	Mnemonic	ON execution time (μs)	Conditions (Top: min.; bottom: max.)	OFF execution time (μs)
50	ADB	14.1	Constant + constant → word	2.6
		15.6	Word + word → word	
		37.4	∗DM + ∗DM → ∗DM	
51	SBB	14.4	Constant – constant → word	2.6
		15.9	Word – word → word	
		37.7	∗DM – ∗DM → ∗DM	
52	MLB	16.8	Constant × constant → word	2.6
		18.5	Word × word → word	
		41.2	∗DM × ∗DM → ∗DM	
53	DVB	16.9	Constant ÷ constant → word	2.6
		18.6	Word ÷ word → word	
		41.3	∗DM ÷ ∗DM → ∗DM	
54	ADDL	25.3	Word + word → word	2.6
		48.6	∗DM + ∗DM → ∗DM	
55	SUBL	25.3	Word – word → word	2.6
		48.6	∗DM – ∗DM → ∗DM	
56	MULL	79.1	Word × word → word	2.6
		102.1	∗DM × ∗DM → ∗DM	
57	DIVL	73.9	Word ÷ word → word	2.6
		98.6	∗DM ÷ ∗DM → ∗DM	
58	BINL	23.9	When converting word data to a word	2.6
		38.5	When converting ∗DM to ∗DM	
59	BCDL	19.1	When converting word data to a word	2.6
		33.7	When converting ∗DM to ∗DM	
60	CMPL	14.8	Comparing words	2.6
		30.6	Comparing ∗DM	
61	INI	68.8	Starting high-speed counter comparison	2.6
		12.0	Stopping high-speed counter comparison	
		43.3	Specifying a constant when changing high-speed counter PV	
		51.8	Specifying ∗DM when changing high-speed counter PV	
		42.8	Specifying increment mode via constant	
		50.8	Specifying increment mode via ∗DM	
		60.1	Stopping pulse output	
		42.7	Specifying a constant when changing pulse output PV	
		50.7	Specifying ∗DM when changing pulse output PV	
		17.8	Stopping synchronized control of high-speed counter	
		20.0	Specifying a constant when changing interrupt counter PV	
		27.6	Specifying ∗DM when changing interrupt counter PV	

Code	Mnemonic	ON execution time (μs)	Conditions (Top: min.; bottom: max.)	OFF execution time (μs)
62	PRV	36.9	Reading high-speed counter PV via word	2.6
		44.7	Reading high-speed counter PV *DM	
		36.6	Specifying increment mode via word	
		44.3	Specifying increment mode via *D	
		38.5	Specifying a word when using synchronized control	
		46.2	Specifying *DM when using synchronized control	
		20.2	Reading high-speed counter pulse output status via word	
		27.4	Reading high-speed counter pulse output status via *DM	
		24.4	Reading high-speed counter read range comparison results via word	
		32.4	Reading high-speed counter read range comparison results via *DM	
		39.9	Reading pulse output PV via word	
		47.8	Reading pulse output PV via *DM	
		20.1	Reading interrupt counter PV via word	
		27.1	Reading interrupt counter PV via *DM	

Code	Mnemonic	ON execution time (μs)	Conditions (Top: min.; bottom: max.)	OFF execution time (μs)
63	CTBL	186.0	Registering a target value comparison table and starting comparison in incrementing/decrementing pulse input mode via word	2.6
		807.5	Registering a target value comparison table and starting comparison in incrementing/decrementing pulse input mode via *DM	
		185.8	Registering a target value comparison table and starting comparison in incrementing mode via word	
		781.9	Registering a target value comparison table and starting comparison in incrementing mode via *DM	
		410.0	Registering a range comparison table and starting comparison in incrementing/decrementing pule input mode via word	
		418.9	Registering a range comparison table and starting comparison in incrementing/decrementing pule input mode via *DM	
		380.6	Registering a range comparison table and starting comparison in incrementing mode via word	
		399.7	Registering a range comparison table and starting comparison in incrementing mode via *DM	
		183.4	Only registering a target value comparison table in incrementing/decrementing pulse input mode via word	
		810.3	Only registering a target value comparison table in incrementing/decrementing pulse input mode via *DM	
		182.4	Only registering a target value comparison table in incrementing mode via word	
		776.3	Only registering a target value comparison table in incrementing mode via *DM	
		351.0	Only registering a range comparison table in incrementing/decrementing pule input mode via word	
		359.1	Only registering a range comparison table in incrementing/decrementing pule input mode via *DM	
		331.2	Only registering a range comparison table in incrementing mode via word	
		335.9	Only registering a range comparison table in incrementing mode via *DM	
64	SPED	44.6	Specifying a constant in independent mode	2.6
		53.8	Specifying *DM in independent mode	
		42.9	Specifying a constant in continuous pulse output mode	
		52.0	Specifying *DM in continuous pulse output mode	
		34.1	Specifying a word when changing output frequency	
		39.8	Specifying *DM when changing output frequency	

Code	Mnemonic	ON execution time (μs)	Conditions (Top: min.; bottom: max.)	OFF execution time (μs)
65	PULS	38.4	Specifying a relative pulse for the set pulse output via a word	2.6
		46.6	Specifying a relative pulse for the set pulse output via *DM	
		40.0	Specifying an absolute pulse for the set pulse output via a word	
		48.1	Specifying an absolute pulse for the set pulse output via *DM	
66	SCL	37.9	Specifying a parameter word; constant to word	2.6
		39.2	Specifying a parameter word; word to word	
		59.9	Specifying a parameter *DM ; *DM to *DM	
67	BCNT	24.9	When counting 1 word	2.6
		4.32 ms	When counting 2,048 words via *DM	
68	BCMP	35.3	Comparing constant, results to word	2.6
		38.3	Comparing word, results to word	
		58.1	Comparing *DM, results to *DM	
69	STIM	25.7	Constant-set one-shot interrupt start	2.6
		47.8	*DM-set one-shot interrupt start	
		25.9	Constant-set scheduled interrupt start	
		47.8	*DM-set scheduled interrupt start	
		34.0	Constant-set timer read	
		46.4	*DM-set timer read	
		10.6	Stopping timer	
70	XFER	21.3	When transferring a constant to a word	2.6
		23.8	When transferring a word to a word	
		1.52 ms	When transferring 2,048 words using *DM	
71	BSET	13.8	When setting a constant to a word	2.6
		14.3	When setting a word to a word	
		971.1	When setting *DM to 2,048 words	
73	XCHG	14.5	Word → word	2.6
		29.3	*DM → *DM	
74	SLD	12.3	Shifting 1 word	2.6
		23.9	Shifting 10 words	
		2.83 ms	Shifting 2,048 words using *DM	
75	SRD	12.3	Shifting 1 word	2.6
		23.9	Shifting 10 words	
		2.83 ms	Shifting 2,048 words using *DM	
76	MLPX	16.8	When decoding word to word	2.6
		46.1	When decoding *DM to *DM	
77	DMPX	19.7	When encoding word to word	2.6
		52.1	When encoding *DM to *DM	
78	SDEC	19.8	When decoding word to word	2.6
		48.3	When decoding *DM to *DM	
80	DIST	18.7	When setting a constant to a word + a word	2.6
		20.2	When setting a word to a word + a word	
		43.1	When setting *DM to *DM +*DM	
		31.0	When setting a constant to a stack	
		32.7	When setting a word to a stack	
		55.9	When setting *DM to a stack via *DM	

Code	Mnemonic	ON execution time (μs)	Conditions (Top: min.; bottom: max.)	OFF execution time (μs)
81	COLL	21.5	When setting a constant + a word to a word	2.6
		21.9	When setting a word + a word to a word	
		42.5	When setting *DM + *DM to *DM	
		31.5	When setting a word + constant to FIFO stack	
		32.0	When setting a word + word to FIFO stack	
		784.7	When setting a *DM + *DM to FIFO stack via *DM	
		33.6	When setting a word + constant to LIFO stack	
		34.0	When setting a word + word to LIFO stack	
		57.1	When setting a *DM + *DM to LIFO stack via *DM	
82	MOVB	17.3	When transferring a constant to a word	2.6
		18.0	When transferring from one word to another	
		41.7	When transferring *DM to *DM	
83	MOVD	13.8	When transferring a constant to a word	2.6
		16.2	When transferring from one word to another	
		38.1	When transferring *DM to *DM	
84	SFTR	22.8	Shifting 1 word	2.6
		24.3	Shifting 10 words	
		1.15 ms	Shifting 2,048 words using *DM	
85	TCMP	27.5	Comparing constant to word-set table	2.6
		28.0	Comparing word to word-set table	
		48.3	Comparing *DM to *DM-set table	
86	ASC	19.1	Word → word	2.6
		52.2	*DM → *DM	
89	INT	22.1	Set masks via word	2.6
		30.1	Set masks via *DM	
		18.4	Clear interrupts via word	
		26.4	Clear interrupts via *DM	
		17.2	Read mask status via word	
		24.1	Read mask status via *DM	
		23.1	Change counter SV via word	
		31.1	Change counter SV via *DM	
		10.7	Mask all interrupts via word	
		10.7	Mask all interrupts via *DM	
		11.0	Clear all interrupts via word	
		11.0	Clear all interrupts via *DM	
91	SBS	10.8	Any	2.6
92	SBN	---		0.76
93	RET	6.2		1.0
97	IORF	16.8	Refreshing IR 000	2.8
		130.7	Refreshing one input word	
		110.7	Refreshing one output word	
99	MCRO	26.1	With word-set I/O operands	2.6
		42.3	With *DM-set I/O operands	

Expansion Instructions without Default Function Codes

Code	Mnemonic	ON execution time (μs)	Conditions (Top: min.; bottom: max.)	OFF execution time (μs)
---	ACC	66.5	When specifying a word in independent mode and CW/CCW mode	2.6
		92.1	When specifying ∗DM in independent mode and CW/CCW mode	
		66.2	When specifying a word in independent mode and Feed/Dir mode	
		92.2	When specifying ∗DM in independent mode and Feed/Dir mode	
		65.5	When executing the word designation in CW continuous mode and CW/CCW mode	
		75.0	When executing the ∗DM designation in CW continuous mode and CW/CCW mode	
		45.4	When changing the word designation in CW continuous mode and CW/CCW mode	
		53.8	When changing the ∗DM designation in CW continuous mode and CW/CCW mode	
		65.5	When executing the word designation in CCW continuous mode and CW/CCW mode	
		75.0	When executing the ∗DM designation in CCW continuous mode and CW/CCW mode	
		45.5	When changing the word designation in CCW continuous mode and CW/CCW mode	
		53.6	When changing the ∗DM designation in CCW continuous mode and CW/CCW mode	
		65.0	When executing the word designation in CW continuous mode and Feed/Dir mode	
		74.5	When executing the ∗DM designation in CW continuous mode and Feed/Dir mode	
		45.4	When changing the word designation in CW continuous mode and Feed/Dir mode	
		53.5	When changing the ∗DM designation in CW continuous mode and Feed/Dir mode	
		65.4	When executing the word designation in CCW continuous mode and Feed/Dir mode	
		74.8	When executing the ∗DM designation in CCW continuous mode and Feed/Dir mode	
		45.5	When changing the word designation in CCW continuous mode and Feed/Dir mode	
		53.6	When changing the ∗DM designation in CCW continuous mode and Feed/Dir mode	
---	AVG	23.2	Average for 1 cycle (constant designation)	3.2
		23.9	Average for 1 cycle (word designation)	
		84.2	Average for 64 cycles (∗DM designation)	
---	FCS	27.6	Adding one word and outputting to word	2.6
		592.3	Adding 999 words and outputting to ∗DM	
---	HEX	25.8	Word → Word	2.6
		72.2	∗DM → ∗DM	
---	HMS	30.7	When converting word to word	2.6
		45.0	When converting ∗DM to ∗DM	
---	MAX	21.9	Searching one word and outputting to word	2.6
		713.9	Searching 999 words and outputting to ∗DM	
---	MIN	21.9	Searching one word and outputting to word	2.6
		713.9	Searching 999 words and outputting to ∗DM	

Code	Mnemonic	ON execution time (μs)	Conditions (Top: min.; bottom: max.)	OFF execution time (μs)		
---	NEG	12.0	Converting constant to word	3.0		
		12.8	Converting word to word			
		28.3	Converting ∗DM to ∗DM			
---	PID	392.5	Initializing word to word	3.3		
		418.8	Initializing ∗DM to ∗DM			
		29.3	Sampling word to word			
		58.7	Sampling ∗DM to ∗DM			
---	PWM	30.3	Constant for pulse width ratio	2.6		
		43.4	Word for pulse width ratio			
		46.0	∗DM for pulse width ratio			
---	SCL2	35.1	Parameter word designation, word to word	2.6		
		59.3	Parameter ∗DM designation, ∗DM to ∗DM			
---	SCL3	37.1	Parameter word designation, word to word	2.6		
		62.3	Parameter ∗DM designation, ∗DM to ∗DM			
---	SEC	29.8	Converting from word to word	2.6		
		44.0	Converting from ∗DM to ∗DM			
---	SRCH	28.9	Searching one word and outputting to a word	2.6		
		1.40 ms	∗DM specification, searching 2,048 words and outputting to ∗DM			
---	STUP	3.42 ms	Constant specification, executed first scan	2.6		
		34.1	Constant specification, executed second scan or later			
		3.44 ms	∗DM specification, executed first scan			
		39.8	∗DM specification, executed second scan or later			
---	SUM	22.8	Word added and output to word	2.6		
		1.44 ms	∗DM specification, 999 bytes added and output to ∗DM			
---	SYNC	34.6	Constant ratio specification, when executed	2.6		
		35.3	Word ratio specification, when executed			
		42.5	∗DM ratio specification, when executed			
		25.3	Word ratio specification, when changed			
		32.6	∗DM ratio specification, when changed			
---	TIML			Reset	IL	JMP
		12.8	Normal execution, constant specification	17.9	17.5	8.1
		13.5	Interrupt execution, constant specification	25.7	25.5	8.1
---	TMHH			Reset	IL	JMP
		12.3	Normal execution, constant specification	15.6	15.1	7.4
		12.7	Interrupt execution, constant specification	17.2	16.9	9.1
		12.7	Normal execution, ∗DM specification	23.6	23.3	7.7
		13.6	Interrupt execution, ∗DM specification	25.1	24.7	9.1
---	ZCP	9.4	Comparing a constant to a constant range and output to word	2.6		
		11.8	Comparing a word to a word range and output to word			
		33.4	Comparing ∗DM to ∗DM and output to ∗DM			
---	ZCPL	19.5	Comparing a word to a word range	2.6		
		45.2	Comparing ∗DM to ∗DM			

7-2 I/O Response Time

7-2-1 CPM2C-S I/O Response Time

The I/O response time is the time it takes after an input signal has been received (i.e., after an input bit has turned ON) for the PC to check and process the information and to output a control signal (i.e., to output the result of the processing to an output bit). The I/O response time varies according to the timing and processing conditions.

The minimum and maximum I/O response times are shown here, using the following program as an example.

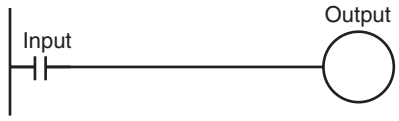

The following conditions are taken as examples for calculating the I/O response times.

Input ON delay:	10 ms (input time constant: default setting)
Overseeing time:	1 ms (includes I/O refreshing)
Instruction execution time:	14 ms
Output ON delay:	15 ms
Communications ports:	Not used.

Minimum I/O Response Time

The CPM2C-S responds most quickly when it receives an input signal just prior to I/O refreshing, as shown in the illustration below.

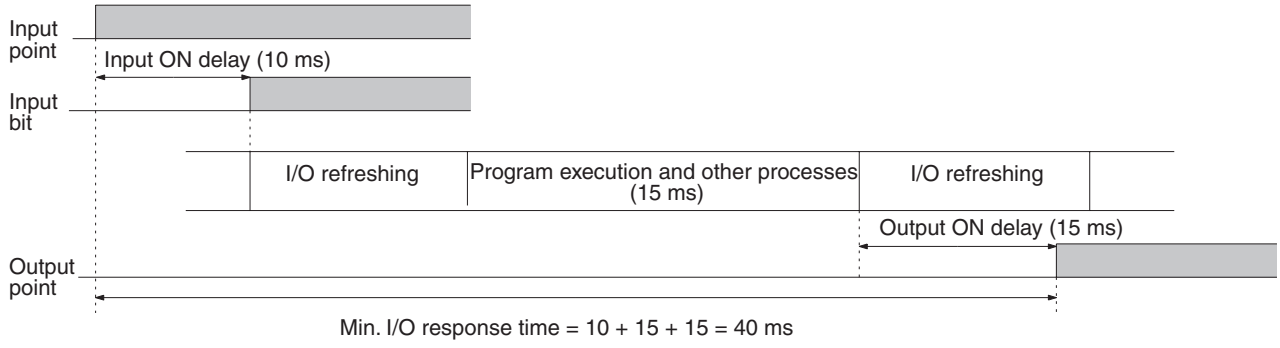

Maximum I/O Response Time

The CPM2C-S takes longest to respond when it receives the input signal just after the input refresh phase of the cycle, as shown in the illustration below. In that case, a delay of approximately one cycle will occur.

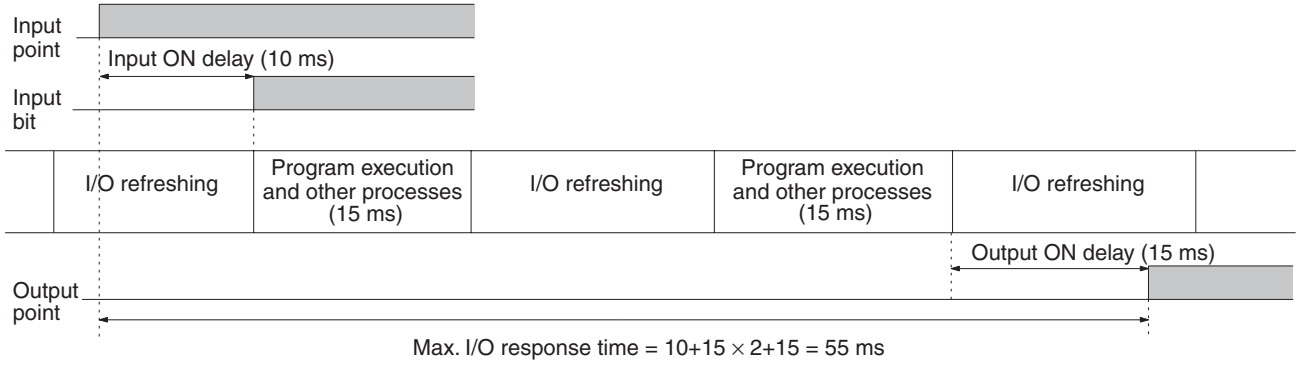

7-2-2 I/O Response Time between CompoBus/S Slaves

The I/O response time between CompoBus/S Slaves depends on the cycle time and I/O timing.

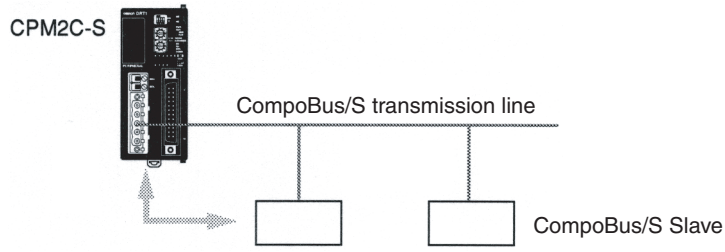

Minimum I/O Response Time

The minimum I/O response time is the CPM2C-S program execution time plus the cycle time calculation time.

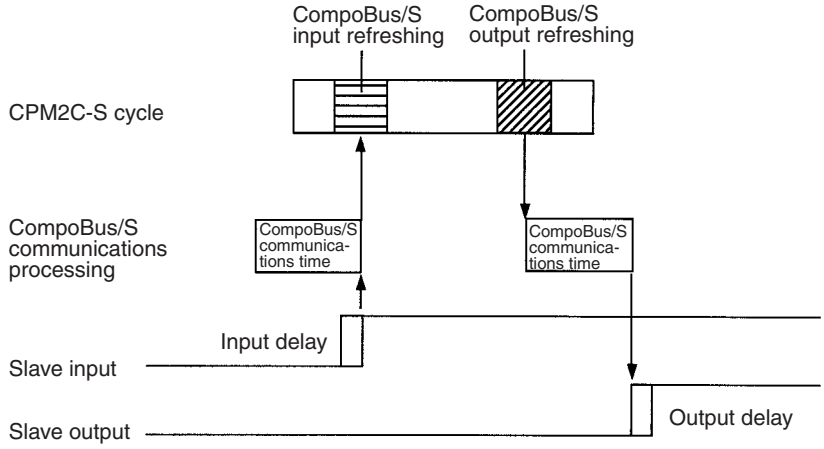

Maximum I/O Response Time

The maximum I/O response time is as follows:
(2 × CPM2C-S cycle time) + CompoBus/S communications time + CompoBus/S Slave input delay + CompoBus/S Slave output delay

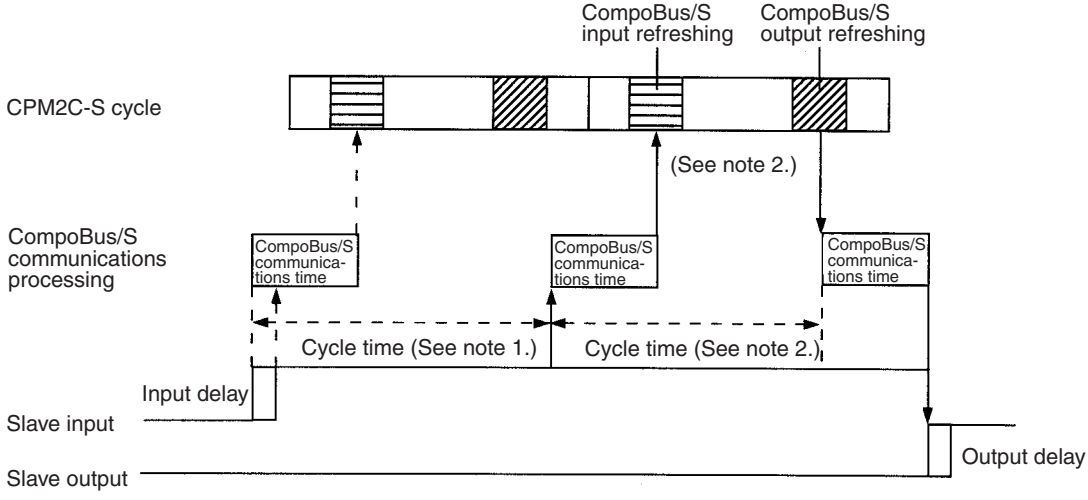

Note The Slave input is not read for almost one PC cycle because it goes ON just after the start of CompoBus/S communications processing (*1). The input is read during the next CompoBus/S communications processing cycle (*2).

7-3 Interrupt Processing Time

This section explains the processing times involved from the time an interrupt is executed until the interrupt processing routine is called, and from the time an interrupt processing routine is completed until returning to the initial location. This explanation applies to input interrupts, interval timer interrupts, and high-speed counter interrupts.

1,2,3...

1. Interrupt source
2. Interrupt ON delay
3. Wait for completion of interrupt-mask processing
4. Change to interrupt processing
5. Execution of interrupt routine
6. Return to initial location

The table below shows the times involved from the generation of an interrupt signal until the interrupt processing routine is called, and from when the interrupt processing routine is completed until returning to the original position.

Item	Contents	Time
Interrupt ON delay	This is the delay time from the time the interrupt input bit turns ON until the time that the interrupt is executed. This delay does not apply to other interrupts.	50 µs
Wait for completion of interrupt-mask processing	When a process that disables (masks) the interrupt is being executed, this is the time required for that process to be completed.	See below.
Change to interrupt processing	This is the time it takes to change processing to the interrupt process.	10 µs
Return	This is the time it takes, from execution of RET(93), to return to the processing that was interrupted.	10 µs

Mask Processing

Interrupts are masked during processing of the operations described below. Until the processing is completed, any interrupts will remain masked for the indicated times.

Generation and clearing of non-fatal errors:

Interrupts will be masked for up to 100 µs when a non-fatal error has been generated and the error contents are being registered in the PC, or when an error is being cleared.

Online editing:

Operation will stop and interrupts will be masked for up to 600 ms (for DM 6144 to DM 6655) when online editing is executed or the settings are changed with STUP(—) during operation. The program or PC Setup can be overwritten during that delay.

In addition to the online editing delay, interrupts may be masked for up to 150 µs for system processing.

Example Calculation

This example shows the interrupt response time (i.e., the time from when the interrupt input turns ON until the start of the interrupt processing routine) when input interrupts are used under the conditions shown below.

Minimum Response Time

	Interrupt ON delay:	50 µs
	Interrupt mask standby time:	0 µs
+	Change-to-interrupt processing:	10 µs
	Minimum response time:	60 µs

Maximum Response Time
(Except for the Online Editing of DM 6144 to DM 6655)

	Interrupt ON delay:	50 µs
	Interrupt mask standby time:	150 µs
+	Change-to-interrupt processing:	10 µs
	Maximum response time:	210 µs

In addition to the response time shown above, the time required for executing the interrupt processing routine itself and a return time of 10 µs must also be accounted for when returning to the process that was interrupted.

7-4 One-to-one PC Link I/O Response Time

When two CPM2C-S PCs are linked 1:1, the I/O response time is the time required for an input executed at one of the PCs to be output to the other PC by means of 1:1 PC Link communications.

The minimum and maximum I/O response times are shown here, using as an example the following instructions executed at the master and the slave. In this example, communications proceed from the master to the slave.

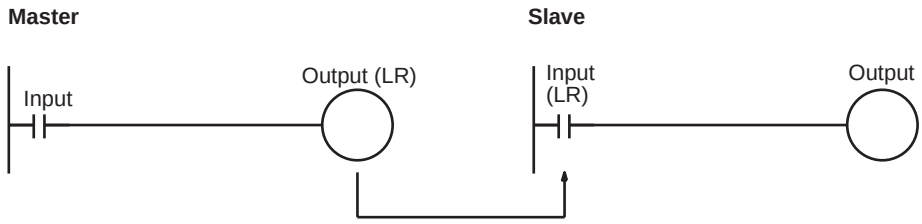

The following conditions are taken as examples for calculating the I/O response times. In CPM2C-S PCs, LR area words LR 00 to LR 15 are used in 1:1 data links and the transmission time is fixed at 12 ms.

Input ON delay:	10 ms (input time constant: default setting)
Master cycle time:	10 ms
Slave cycle time:	15 ms
Output ON delay:	15 ms

Minimum I/O Response Time

The CPM2C-S responds most quickly under the following circumstances:

1,2,3...

1. The CPM2C-S receives an input signal just prior to the input refresh phase of the cycle.
2. The Master's communications servicing occurs just as the Master-to-Slave transmission begins.
3. The Slave's communications servicing occurs just after the transmission is completed.

The minimum I/O response time = Input ON response time + Master's cycle time + Transmission time + Slave's cycle time + Output ON response time

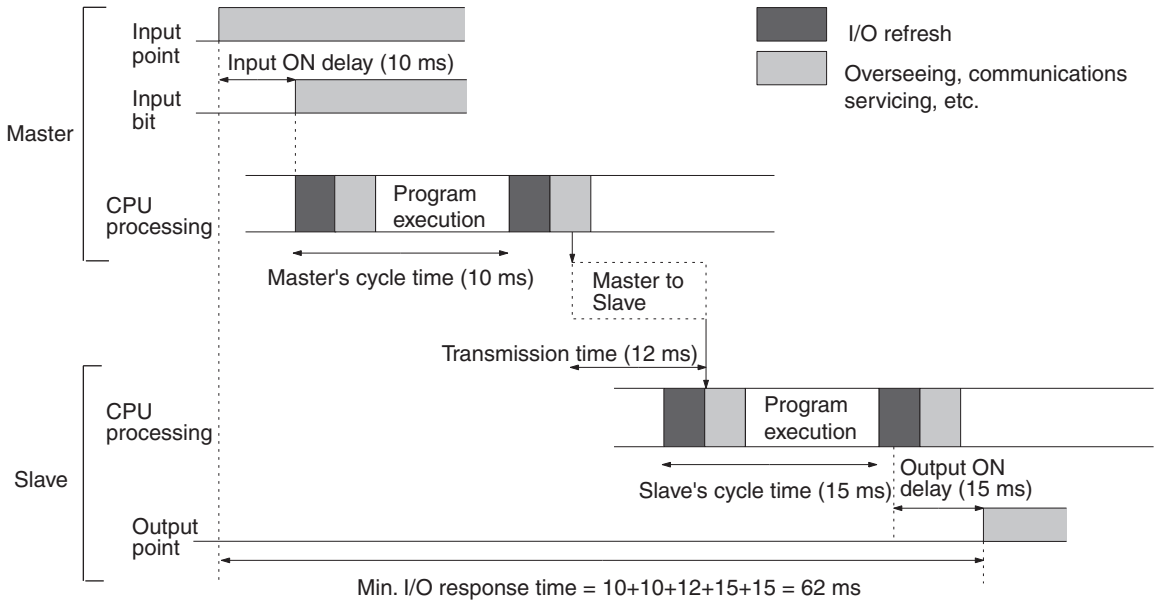

Maximum I/O Response Time

The CPM2C-S takes the longest to respond under the following circumstances:

1,2,3...

1. The CPM2C-S receives an input signal just after the input refresh phase of the cycle.
2. The Master's communications servicing just misses the Master-to-Slave transmission.
3. The transmission is completed just after the Slave's communications servicing ends.

The maximum I/O response time = Input ON response time + Master's cycle time × 2 + Transmission time × 3 + Slave's cycle time × 2 + Output ON response time

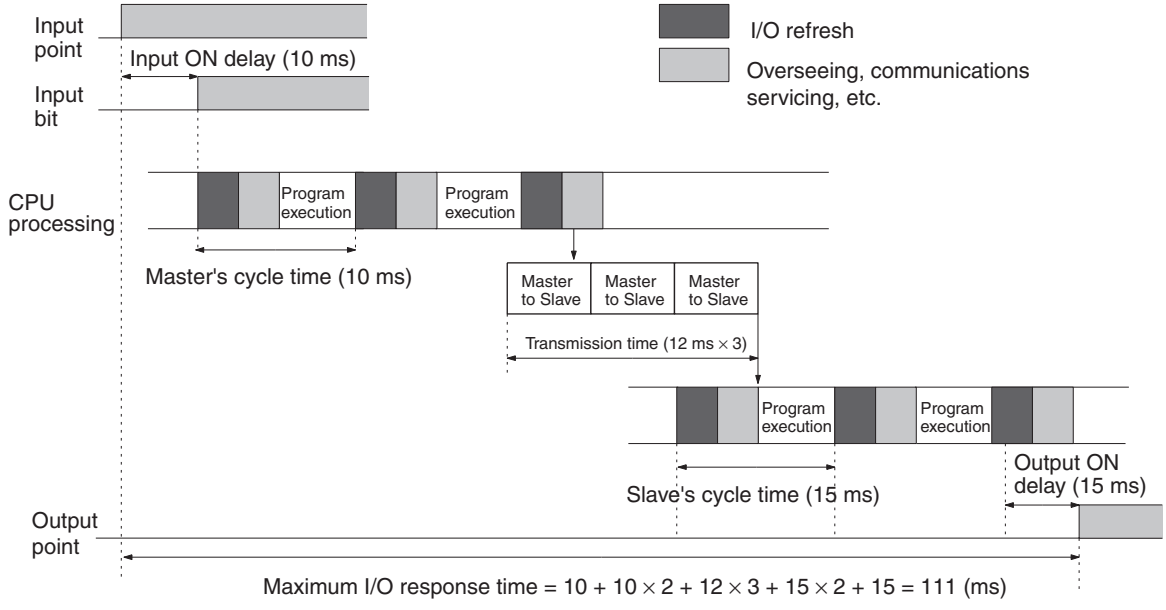

SECTION 8
Using Programming Devices

This section outlines the operations possible with the Programming Consoles. Operations for the CX-Programmer are provided in the *CX-Programmer Operation Manual* (W414, W425). Refer to *3-4-9 Programming Device Connections* for details on connecting a Programming Console or personal computer to the CPM2C-S.

8-1 Using a Programming Console 160
- 8-1-1 Connecting the Programming Console 160
- 8-1-2 Compatible Programming Consoles 161
- 8-1-3 Changing the CPM2C-S' Mode with the Mode Switch 164
- 8-1-4 Preparation for Operation 165
- 8-1-5 Entering the Password 165

8-2 Programming Console Operations 166
- 8-2-1 Overview 166
- 8-2-2 Clearing Memory 167
- 8-2-3 Clearing All Memory 168
- 8-2-4 Reading UM Allocations 168
- 8-2-5 Reading/Clearing Error Messages 169
- 8-2-6 Buzzer Operation 170
- 8-2-7 Assigning Expansion Instruction Function Codes 170
- 8-2-8 Setting and Reading a Program Memory Address and Monitoring I/O Bit Status 171
- 8-2-9 Entering or Editing Programs 172
- 8-2-10 Instruction Search 175
- 8-2-11 Bit Operand Search 176
- 8-2-12 Inserting and Deleting Instructions 176
- 8-2-13 Checking the Program 178
- 8-2-14 Bit, Digit, Word Monitor 179
- 8-2-15 Differentiation Monitor 181
- 8-2-16 Binary Monitor 182
- 8-2-17 Three-Word Monitor 182
- 8-2-18 Signed Decimal Monitor 183
- 8-2-19 Unsigned Decimal Monitor 184
- 8-2-20 Three-Word Data Modification 184
- 8-2-21 Changing Timer, Counter SV 185
- 8-2-22 Hexadecimal, BCD Data Modification 186
- 8-2-23 Binary Data Modification 187
- 8-2-24 Signed Decimal Data Modification 188
- 8-2-25 Unsigned Decimal Data Modification 189
- 8-2-26 Force Set, Reset 189
- 8-2-27 Clear Force Set/Reset 190
- 8-2-28 Hex-ASCII Display Change 191
- 8-2-29 Displaying the Cycle Time 191
- 8-2-30 Reading and Setting the Clock 192

8-3 Programming Example 193
- 8-3-1 Preparatory Operations 193
- 8-3-2 Example Program 194
- 8-3-3 Programming Procedures 195
- 8-3-4 Checking the Program 198
- 8-3-5 Test Run in MONITOR Mode 199

8-1 Using a Programming Console

This section provides information on connecting and using a Programming Console. Refer to *9-3 Programming Console Operation Errors* for details on errors that might occur during Programming Console operations.

8-1-1 Connecting the Programming Console

The following diagram shows how a CQM1H-PRO01-E, CQM1-PRO01-E, or C200H-PRO27-E Programming Console can be connected to the communications port on the CPM2C-S CPU Unit.

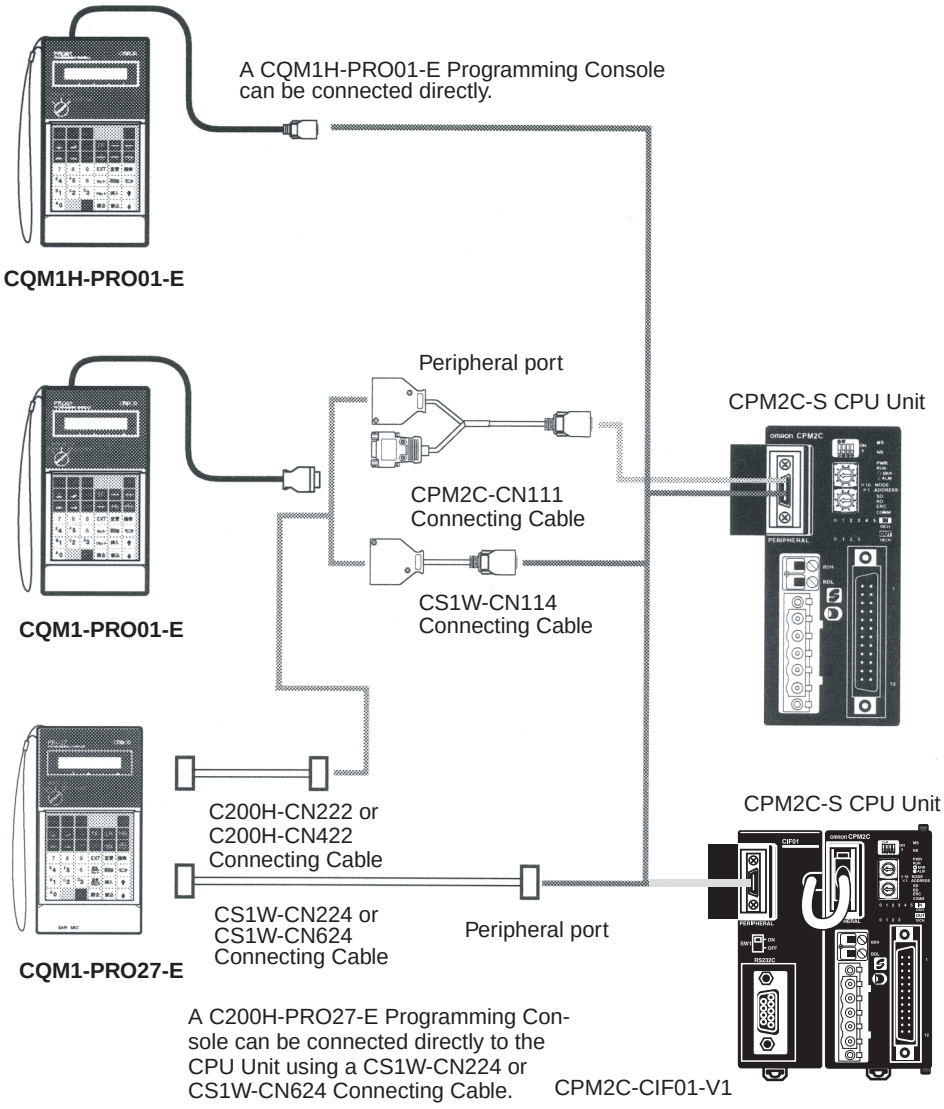

Note 1. Connect the Programming Console to the peripheral port. A Programming Console cannot be connected through the RS-232C port on a CPM2C-CN111 Adapter.

2. If the Programming Console's cable is disconnected and then reconnected within 2 seconds, it won't be necessary to reenter the password and the previous display status will remain. In some cases, it won't be necessary to reenter the password if the Programming Console's cable is disconnect-

ed while a time-consuming operation (such as a program check) is being performed.

Panel Installation

The C200H-PRO27-E Programming Console can be installed in a control panel as shown in the following diagram. (The C200H-ATT01 Mounting Bracket is sold separately.)

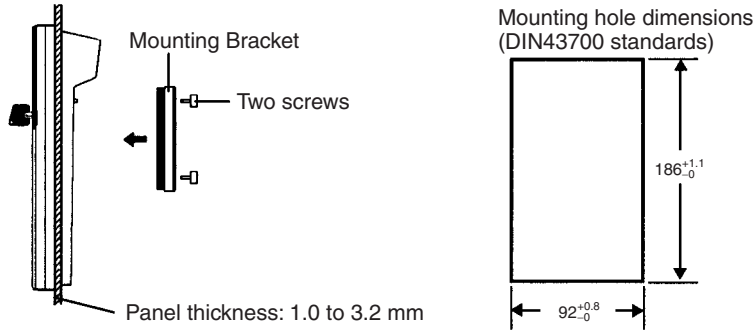

Allow at least 80 mm for the cable connector above the Programming Console.

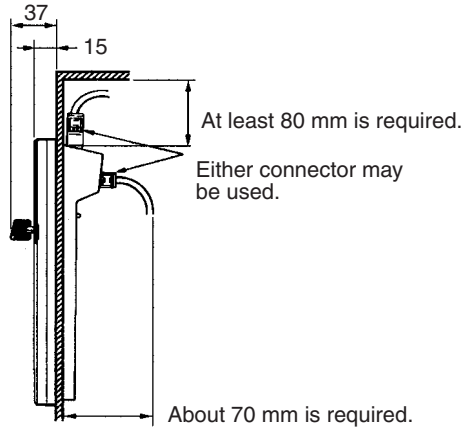

8-1-2 Compatible Programming Consoles

There are 3 Programming Consoles that can be used with the CPM2C-S: The CQM1H-PRO01-E, CQM1-PRO01-E and the C200H-PRO27-E. The key functions for these Programming Consoles are identical.

Press and hold the Shift Key to input a letter shown in the upper-left corner of the key or the upper function of a key that has two functions. For example, the CQM1-PRO01-E's AR/HR Key can specify either the AR or HR Area; press and release the Shift Key and then press the AR/HR Key to specify the AR Area.

CQM1H-PRO01-E, CQM1-PRO01-E

The CQM1H-PRO01-E can be connected directly to the CPM2C-S.

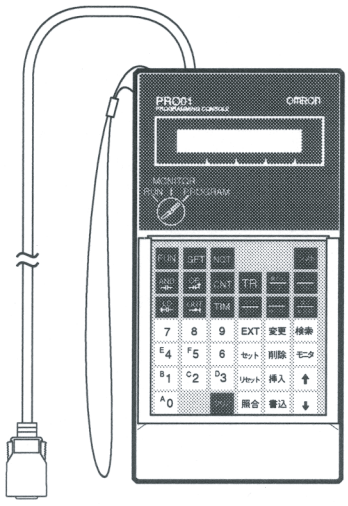

Attached Cable (2 m)

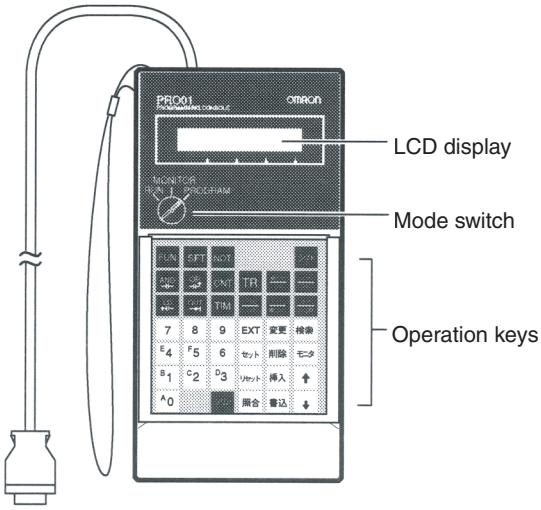

Attached Cable (2 m)

C200H-PRO27-E

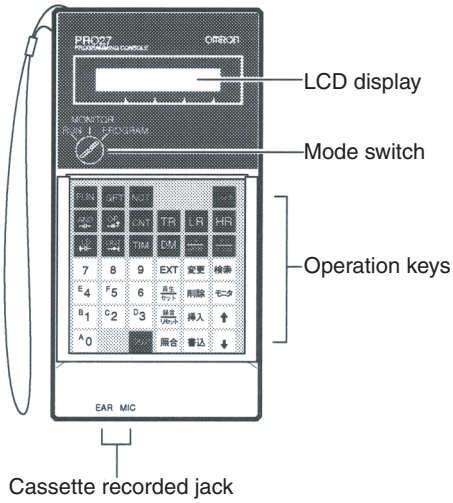

Cassette recorded jack
(Cannot be used with the CPM2C-S).

The following Connecting Cables can be used with the C200H-PRO27-E.

Model	Cable length	Connection
C200H-CN222	2 m	Connects to the peripheral port on a CPM2C-CN111 or CS1W-CN114.
C200H-CN422	4 m	
CS1W-CN224	2 m	Connects directly to the CPM2C-S CPU Unit's communications port.
CS1W-CN624	6 m	

Different Keys

The following keys are labeled differently on the CQM1-PRO01-E and the C200H-PRO27-E, but the operation of the keys in each pair is identical.

CQM1-PRO01-E and CQM1H-PRO01-E Keys	C200H-PRO27-E Keys
AR/HR	HR
SET	PLAY/SET
RESET	REC/RESET

Note To specify the AR area, use SHIFT and HR Keys for the C200H-PRO27-E and use SHIFT and AR/HR Keys for the CQM1-PRO01-E/CQM1H-PRO01-E.

A shift symbol will be displayed in the upper-right corner of the screen when the Shift Key is pressed. The shift input can be cleared by pressing the Shift Key again.

Mode Switch

The mode switch controls the CPM2C-S' operating mode. The key can be removed when the switch is set to RUN or MONITOR but it cannot be removed when the switch is set to PROGRAM.

Contrast Control

The display contrast can be adjusted with the control on the right side of the Programming Console.

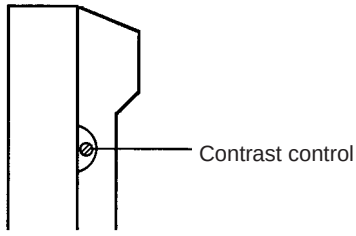

Buzzer Volume

The C200H-PRO27-E's buzzer volume can be adjusted with the lever on the right side of the Programming Console. The buzzer volume cannot be adjusted on the CQM1-PRO01-E and CQM1H-PRO01-E.

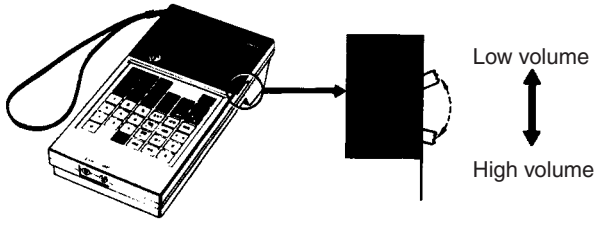

C200H-PRO27-E

Note The buzzer volume can be turned on and off with a key operation. See *8-2-6 Buzzer Operation* for details.

8-1-3 Changing the CPM2C-S' Mode with the Mode Switch

Once the Programming Console has been connected, its mode switch can be used to change the CPM2C-S' operating mode. The mode display (<PROGRAM>, <MONITOR>, or <RUN>) will appear on the Programming Console screen.

- No key operations can be performed while the mode display is displayed on the Programming Console screen. Press CLR to clear the display so that key operations can be performed.
- If the SHIFT Key is pressed while the mode switch is turned, the original display will remain on the Programming Console's screen and the mode display won't appear.
- The CPM2C-S will enter RUN mode automatically if a Programming Console isn't connected when the CPM2C-S is turned on.

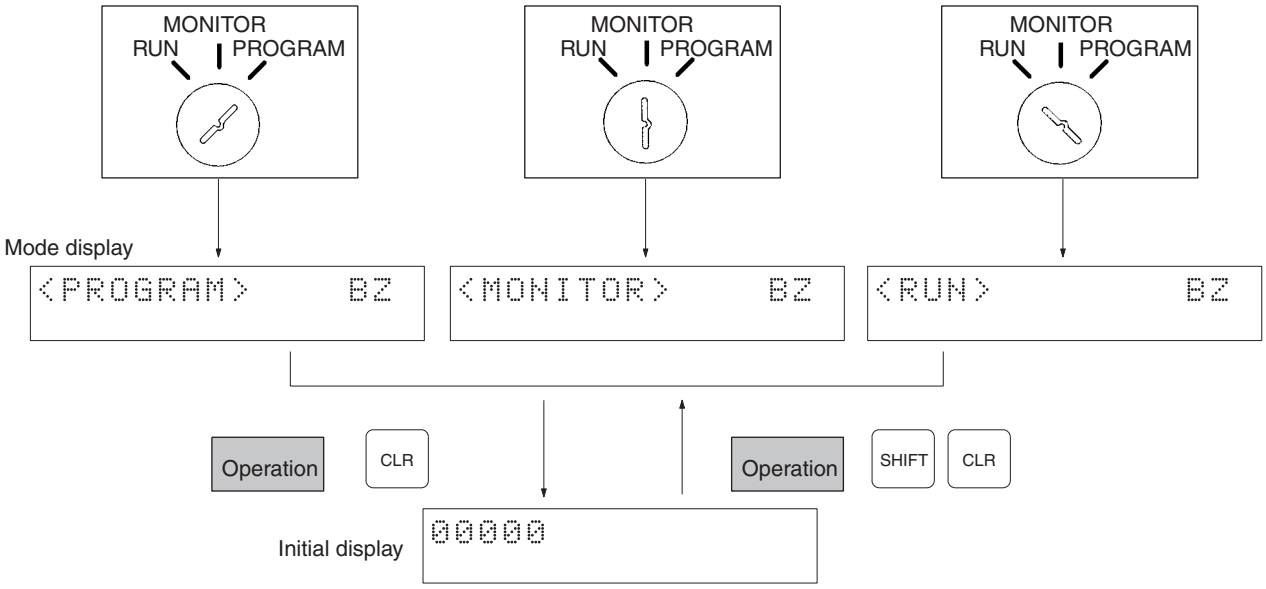

Operating Modes

PROGRAM Mode

The CPM2C-S program isn't executed in PROGRAM mode. Use PROGRAM mode to create and edit the program, clear memory, or check the program for errors.

MONITOR Mode

The CPM2C-S program is executed in MONITOR mode and I/O is processed just as it is in RUN mode. Use MONITOR mode to test system operations, such as monitoring CPM2C-S operating status, force-setting and resetting I/O bits, changing the SV/PV of timers and counters, changing word data, and online editing.

RUN Mode

This is the CPM2C-S' normal operating mode. The CPM2C-S' operating status can be monitored from a Programming Device, but bits can't be force-set/force-reset and the SV/PV of timers and counters can't be changed.

⚠ **Caution** Check the system thoroughly before changing the operating mode of the PC to prevent any accidents that might occur when the program is first started.

⚠ **Caution** Never change the mode while pressing any of the keys.

Startup Operating Mode

The operating mode of the CPM2C-S when the power is turned ON depends upon the PC Setup settings in DM 6600, the setting of DIP switch pin 4, and the mode set on the Programming Console's mode switch if a Programming Console is connected. See *1-3-3 Operating Mode at Startup* for details.

8-1-4 Preparation for Operation

This section describes the procedures required to begin Programming Console operation when using the Programming Console for the first time.

⚠ **Caution** Always confirm that the Programming Console is in PROGRAM mode when turning ON the PC with a Programming Console connected unless another mode is desired for a specific purpose. If the Programming Console is in RUN mode when PC power is turned ON, any program in Program Memory will be executed, possibly causing a PC-controlled system to begin operation.

The following sequence of operations must be performed before beginning initial program input.

1,2,3...

1. Be sure that the PC is OFF.
2. Connect the Programming Console to the CPU Unit's communications port (peripheral port). See *8-1-1 Connecting the Programming Console* for details.
   (The CPU Unit's Communications Switch setting has no effect on communications with the Programming Console.)
3. Set the mode switch to PROGRAM mode.
4. Turn ON the PC.
5. Enter the password. See *8-1-5 Entering the Password* for details.
6. Clear (All Clear) the PC's memory. See *8-2-2 Clearing Memory* for details.
7. Read and clear all errors and messages. See *8-2-5 Reading/Clearing Error Messages* for details.
8. Start programming.

8-1-5 Entering the Password

To gain access to the PC's programming functions, you must first enter the password. The password prevents unauthorized access to the program.

The PC prompts you for a password when PC power is turned on or, if PC power is already on, after the Programming Console has been connected to the PC. To gain access to the system when the "Password!" message appears, press CLR and then MONTR. Then press CLR to clear the display.

If the Programming Console is connected to the PC when PC power is already on, the first display below will indicate the mode the PC was in before the Programming Console was connected. **Ensure that the PC is in PROGRAM mode before you enter the password.** When the password is entered, the PC will shift to the mode set on the mode switch, causing PC operation to begin if the mode is set to RUN or MONITOR. The mode can be

changed to RUN or MONITOR with the mode switch after entering the password.

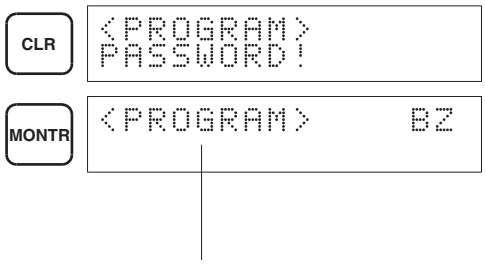

Indicates the mode set by the mode selector switch.

8-2 Programming Console Operations

8-2-1 Overview

The following table lists the programming and monitoring operations that can be performed from a Programming Console. Refer to the rest of this section for details on operational procedures.

Name	Function	Page
Clearing memory	Clears all or part of the Program Memory and any data areas that are not read-only, as well as the contents of the Programming Console's memory.	167
Clearing all memory	Clears the user program, including the I/O comment area set by the CX-Programmer (version 2.0 or later), as well as the PC Setup and all bits, timers, counters, and DM Area data.	168
Reading UM allocations	Reads the capacity of the I/O comment area and the ladder program when an I/O comment area has been set with the CX-Programmer (version 2.0 or later).	168
Reading/clearing error messages	Displays and clears error messages and displays MESSAGE instruction messages.	169
Buzzer operation	Turns on and off the buzzer that sounds when Programming Console keys are pressed.	170
Assigning expansion instruction function codes	Reads or changes the function codes assigned to expansion instructions	170
Setting a program memory address	Sets the specified program memory address when reading, writing, inserting and deleting programs.	171
Reading a program memory address	Reads the contents of the Program Memory. Displays the status of the currently displayed bit in PROGRAM and MONITOR modes.	171
Instruction search	Finds occurrences of the specified instruction in the program.	175
Bit operand search	Finds occurrences of the specified operand bit in the program.	176
Inserting and deleting instructions	Inserts or deletes instructions from the program.	176
Entering or editing programs	Overwrites the contents of the current Program Memory to either input a program for the first time or to change a program that already exists.	172
Checking the program	Checks for programming errors and displays the program address and error when errors are found.	178
Bit, digit, word monitor	Monitors the status of up to 16 bits and words, although only 3 can be shown on the display at one time.	179
Multiple address monitor	Monitors the status of up to 6 bits and words simultaneously.	180
Differentiation monitor	Monitors the up or down differentiation status of a particular bit.	181
Binary monitor	Monitors the ON/OFF status of any word's 16 bits.	182
3-word monitor	Monitors the status of three consecutive words.	182
Signed decimal monitor	Converts the contents of the specified word from signed hexadecimal (two's complement format) to signed decimal for display.	183

Name	Function	Page
Unsigned decimal monitor	Converts hexadecimal data in a word to unsigned decimal for display.	184
3-word data modification	Changes the contents of one or more of the 3 consecutive words displayed in the 3-Word Monitor operation.	184
Changing timer, counter SV 1	Changes the SV of a timer or counter.	185
Changing timer, counter SV 2	Makes fine adjustment changes to the SV of the timer or counter.	186
Hexadecimal, BCD data modification	Changes the BCD or hexadecimal value of a word being monitored.	186
Binary data modification	Changes the status of a word's bits when the word is being monitored.	187
Signed decimal data modification	Changes the decimal value of a word being monitored as signed decimal data, within a range of –32,768 to 32,767. The contents of the specified word are converted automatically to signed hexadecimal (two's complement format.)	188
Unsigned decimal data modification	Changes the decimal value of a word being monitored as unsigned decimal data, within a range of 0 to 65,535. A change into hexadecimal data is made automatically.	189
Force set/reset	Forces bits ON (force set) or OFF (force reset.)	189
Clear force set/reset	Restores the status of all bits which have been force set of reset.	190
Hex-ASCII display change	Converts word data displays back and forth between 4-digit hexadecimal data and ASCII.	191
Displaying the cycle time	Displays the current average cycle time (scan time.)	191
Reading and setting the clock	Reads or sets the internal clock.	192

8-2-2 Clearing Memory

This operation is used to clear all or part of the Program Memory and data areas, as well as the contents of the Programming Console's memory. This operation is possible in PROGRAM mode only.

RUN	MONITOR	PROGRAM
No	No	OK

Before beginning to program for the first time or when installing a new program, clear all areas.

All Clear

The following procedure is used to clear memory completely, including the program, all data areas, counter PVs, Data Memory, and the PC Setup (DM 6600 to DM 6655).

1,2,3...

1. Bring up the initial display by pressing the CLR Key repeatedly.
2. Press the SET, NOT, and then the RESET Key to begin the operation.

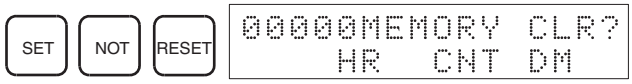

3. Press the MONTR Key to clear memory completely.

⚠ **Caution** The PC Setup (DM 6600 through DM 6655) will be cleared when this operation is performed.

Partial Clear

It is possible to retain the data in specified areas or part of the Program Memory. To retain the data in the HR, TC, or DM Areas, press the appropriate key after pressing SET, NOT, and RESET. Any data area that still appears on the display will be cleared when the MONTR Key is pressed.

The HR Key is used to specify both the AR and HR Areas, the CNT Key is used to specify the entire timer/counter area, and the DM Key is used to specify the DM Area.

It is also possible to retain a portion of the Program Memory from the first memory address to a specified address. After designating the data areas to be retained, specify the first Program Memory address to be cleared. For example, input 030 to leave addresses 000 to 029 untouched, but to clear addresses from 030 to the end of Program Memory.

As an example, follow the procedure below to retain the timer/counter area and Program Memory addresses 000 through 122:

1,2,3...

1. Press the CLR Key to bring up the initial display.
2. Press the SET, NOT, and then the RESET Key to begin the operation.
3. Press the CNT Key to remove the timer/counter area from the data areas shown on the display. (Counter PVs will not be cleared.)

4. Press 123 to specify 123 as the starting program address.

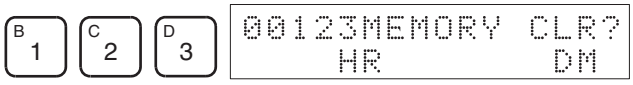

5. Press the MONTR Key to clear the specified regions of memory.

8-2-3 Clearing All Memory

The I/O comments function has been enabled for the CPM2C-S accompanying the CX-Programmer upgrade from version 1.2 to 2.0. This operation is used when it is necessary to clear the I/O comment area along with the rest of memory. The contents of the I/O comment area are completely initialized, and the size of the area is returned to its initial value of 2.0 Kwords.

RUN	MONITOR	PROGRAM
No	No	OK

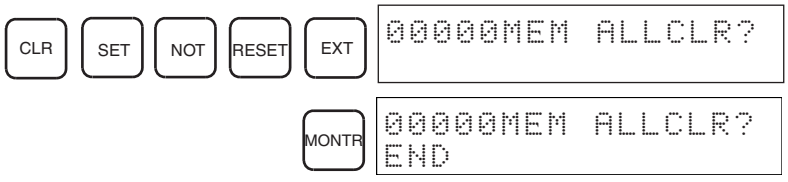

This operation is required in order to initialize the I/O comment area along with the program. The memory clear operation (refer to *8-2-2 Clearing Memory*) does not initialize the I/O comment area.

8-2-4 Reading UM Allocations

The I/O comment area and ladder program area capacities can be read by reading UM allocation data when the I/O comment area has been set with the CX-Programmer (version 2.0 or later). To change the size of the I/O comment

area, refer to the CX-Programmer (version 2.0 or later) *Operation Manual* (W414).

RUN	MONITOR	PROGRAM
OK	OK	OK

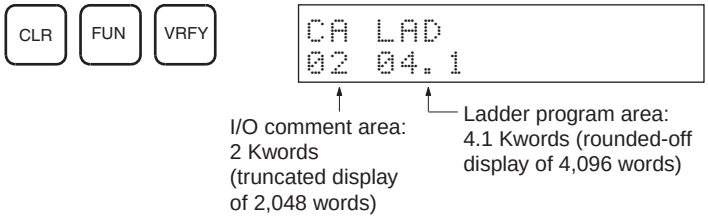

8-2-5 Reading/Clearing Error Messages

This operation is used to display and clear error messages. It is possible to display and clear non-fatal errors and MESSAGE instruction messages in any mode, but fatal errors can be cleared in PROGRAM mode only.

RUN	MONITOR	PROGRAM
OK	OK	OK

Before inputting a new program, any error messages recorded in memory should be cleared. It is assumed here that the causes of any of the errors for which error messages appear have already been taken care of. If the buzzer sounds when an attempt is made to clear an error message, eliminate the cause of the error, and then clear the error message. (Refer to *SECTION 9 Test Runs and Error Processing* for troubleshooting information.)

Key Sequence

Follow the procedure below to display and clear messages.

1,2,3...

1. Press the CLR Key to bring up the initial display.
2. Press the FUN and then the MONTR Key to begin the operation. If there are no messages, the following display will appear:

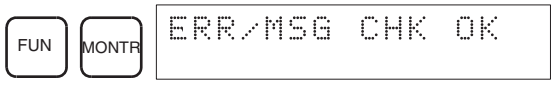

If there are messages, the most serious message will be displayed when the MONTR Key is pressed. Pressing MONTR again will clear the present message and display the next most serious error message. Continue pressing MONTR until all messages have been cleared. These are some examples of error messages:

A memory error:

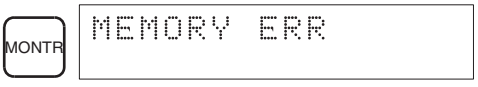

A system error:

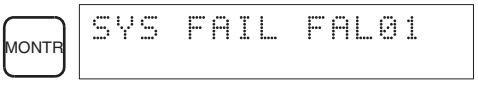

A message (displayed with MSG(46)):

All messages cleared:

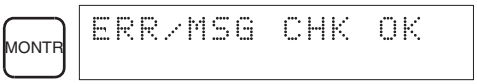

8-2-6 Buzzer Operation

This operation is used to turn on and off the buzzer that sounds when Programming Console keys are pressed. This buzzer will also sound whenever an error occurs during PC operation. Buzzer operation for errors is not affected by this setting.

This operation is possible in any mode.

RUN	MONITOR	PROGRAM
OK	OK	OK

Key Sequence

Follow the procedure below to turn the key-input buzzer on and off.

1,2,3...

1. Press the CLR, SHIFT, and then the CLR Key to bring up the mode display. In this case the PC is in PROGRAM mode and the buzzer is ON.

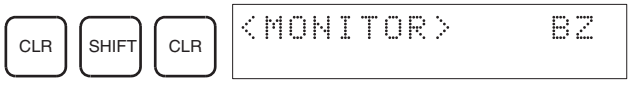

2. Press the SHIFT and then the 1 Key to turn off the buzzer.

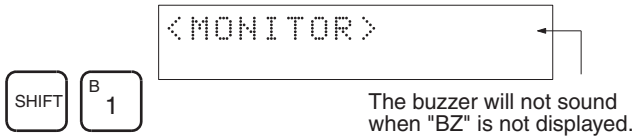

3. Press the SHIFT and then the 1 Key again to turn the buzzer back ON.

8-2-7 Assigning Expansion Instruction Function Codes

This operation is used to display or change the expansion instructions assigned to expansion instruction function codes. The assignments can be displayed in any mode, but can be changed in PROGRAM mode only.

Operation	RUN	MONITOR	PROGRAM
Read assignment	OK	OK	OK
Change assignment	No	No	OK

Assign expansion instruction function codes before inputting the program. The CPM2C-S will not operate properly if expansion instructions aren't assigned correctly. An expansion instruction can be assigned to one function code only.

The PC Setup must be set for user-defined expansion instruction assignments. Set bits 8 to 11 of DM 6602 to 1 and turn the PC's power off and then on again to enable the new setting.

1,2,3...

1. Press the CLR Key to bring up the initial display.
2. Press the EXT Key to display the assignment for the first function code (17).

3. Press the Up and Down Arrow Keys to scroll through the expansion instruction function codes.

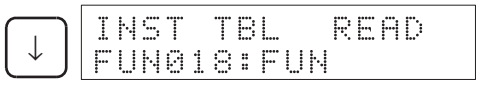

4. Press the CHG Key to assign a different expansion instruction to the selected function code.

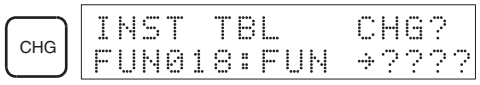

5. Press the Up and Down Arrow Keys to scroll through the expansion instructions that can be assigned to the selected function code.

6. Press the WRITE Key to assign the displayed instruction to the function code.

8-2-8 Setting and Reading a Program Memory Address and Monitoring I/O Bit Status

This operation is used to display the specified program memory address and is possible in any mode. In the RUN or MONITOR mode, the I/O bit status of bits in the program will be displayed.

RUN	MONITOR	PROGRAM
OK	OK	OK

When inputting a program for the first time, it is generally written to Program Memory starting from address 000. Because this address appears when the display is cleared, it is not necessary to specify it.

When inputting a program starting from other than 000 or to read or modify a program that already exists in memory, the desired address must be designated.

1,2,3...

1. Press the CLR Key to bring up the initial display.
2. Input the desired address. It is not necessary to input leading zeroes.

3. Press the Down Arrow Key.

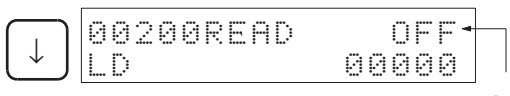

In the RUN or MONITOR mode, ON/OFF status of the bit will be displayed.

Pressing the MONTR Key will change to the I/O monitor display. Bits can be force-set or force-reset from the I/O monitor display. Press the CLR Key to return to I/O bit status monitoring of the initial address.

Note The ON/OFF status of any displayed bit will be shown if the PC is in RUN or MONITOR mode.

4. Press the Up and Down Arrow Keys to scroll through the program.

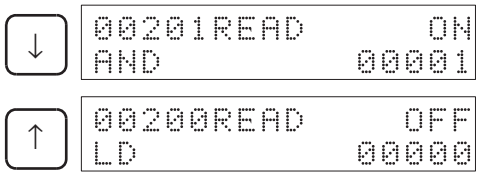

8-2-9 Entering or Editing Programs

This operation is used enter or edit programs. It is possible in PROGRAM mode only.

RUN	MONITOR	PROGRAM
No	No	OK

The same procedure is used to either input a program for the first time or to change a program that already exists. In either case, the current contents of Program Memory is overwritten.

The program shown in the following diagram will be entered to demonstrate this operation.

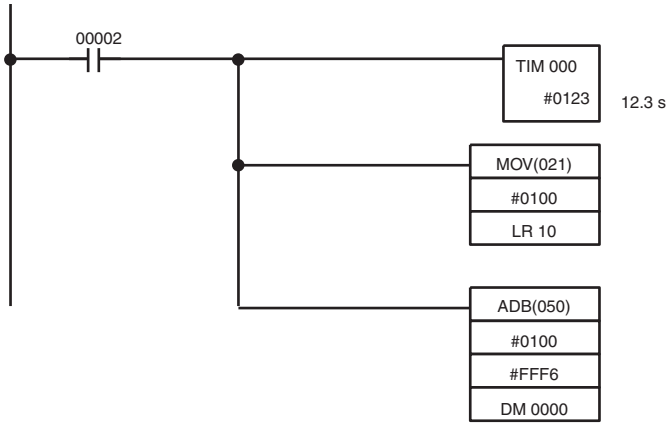

Address	Instruction	Operands
00200	LD	IR 00002
00201	TIM	000
		#0123
00202	MOV(021)	
		#0100
		LR 10
00203	ADB(050)	
		#0100
		#FFF6
		DM 0000

1,2,3...

1. Press the CLR Key to bring up the initial display.
2. Specify the address where the program will begin.
3. Input the address where the program will begin and press the Down Arrow Key. It is not necessary to input leading zeroes.

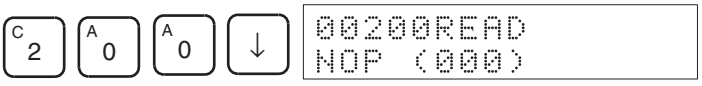

4. Input the first instruction and operand.

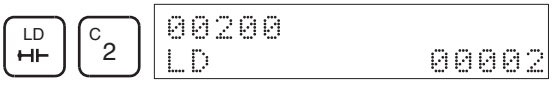

5. Press the WRITE Key to write the instruction to Program Memory. The next program address will be displayed.

If a mistake was made inputting the instruction, press the Up Arrow Key to return to the previous program address and input the instruction again. The mistaken instruction will be overwritten

To specify the Completion Flag for a timer or counter, press the LD, AND, OR, or NOT Key followed by the TIM or CNT Key, and then input the timer/counter number last.

6. Input the second instruction and operand. (In this case it isn't necessary to enter the timer number, because it's 000.) Press the WRITE Key to write the instruction to Program Memory.

[TIM] Timer number [WRITE]

```
00201 TIM DATA
            #0000
```

7. Input the second operand (123 to specify 12.3 seconds) and press the WRITE Key. The next program address will be displayed.

[B 1] [C 2] [D 3] [WRITE]

```
00202READ
NOP (000)
```

If a mistake was made inputting the operand, press the Up Arrow Key to return to display the mistaken operand and input the operand again.

Note a) Counters are input in the same basic way as timers except the CNT Key is pressed instead of the TIM Key.

b) Timer and counter SVs are input in BCD, so it isn't necessary to press the CONT/# Key.

8. Input the third instruction and its operands. First input the instruction by pressing the FUN Key and then the function code (21 in this case).

[FUN] [C 2] [B 1]

```
00202
MOV (021)
```

To input the differentiated version of an instruction, press the NOT Key after the function code (FUN 2 1 NOT). The "@" symbol will be displayed next to differentiated instructions. Press the NOT Key again to change back the instruction back to a non-differentiated instruction. The "@" symbol will disappear.

To change an instruction after it has been entered, simply scroll through the program until the desired instruction is displayed and press the NOT Key. The "@" symbol should be displayed next to the instruction.

9. Press the WRITE Key to write the instruction to Program Memory. The input display for the first operand will be displayed.

[WRITE]

```
00202 MOV DATA A
              000
```

- **Writing Hexadecimal, BCD Constant**

10. Input the first operand.

The operands of MOV (21) are normally word addresses, but a constant can be input by pressing the CONT/# Key first. When the CONT/# Key is pressed, the display will change to "#0000," indicating that a constant can be entered.

[CONT/#] [B 1] [A 0] [A 0]

```
00202 MOV DATA A
            #0100
```

Press the WRITE Key to write the instruction to Program Memory. The input display for the second operand will appear.

[WRITE]

```
00202 MOV DATA B
              000
```

Note The operands of MOV(21) can be word addresses, so the CONT/# Key must be pressed to input a constant.

- **Writing a Word Address**

11. Input the second operand.

*EM/LR B 1 A 0

```
00202 MOV DATA B
          LR    10
```

Press the WRITE Key to write the instruction to Program Memory. The next program address will be displayed.

WRITE

```
00203READ
NOP (000)
```

Note When the default display value is “000”, a word address can be input immediately without pressing the Shift and CH/# Keys.

12. Input the next instruction.

FUN F 5 A 0

```
00203
ADB (050)
```

Press the WRITE Key to write the instruction to Program Memory.

WRITE

```
00203 ADB DATA A
              000
```

- **Writing an Unsigned Decimal Number**

13. The first operand is input as an unsigned integer.

CONT/# SHIFT TR NOT

```
00203 ADB DATA A
          #00000
```

Input the value of the operand from 0 to 65535.

C 2 F 5 6

```
00203 ADB DATA A
          #00256
```

Note If an erroneous input is made, press the CLR Key to restore the status prior to the input. Then enter the correct input.

14. Restore the hexadecimal display.

SHIFT TR

```
00203 ADB DATA A
            #0100
```

Note If an input is made outside of the permissible range, a buzzer will sound and the hexadecimal display will not be displayed.

WRITE

```
00203 ADB DATA B
              000
```

15. The second operand is input as a signed integer.

CONT/# SHIFT TR

```
00203 ADB DATA B
        #+00000
```

Input the value of the operand from –32,768 to 32,767. Use the SET Key to input a positive number, and use the RESET Key to input a negative number.

RESET B 1 A 0

```
00203 ADB DATA B
          #-00010
```

Note If an erroneous input is made, press the CLR Key to restore the status prior to the input. Then enter the correct input.

16. Restore the hexadecimal display.

SHIFT TR

```
00203 ADB DATA B
             #FFF6
```

WRITE

```
00203 ADB DATA C
               000
```

- **Writing a Word Address (DM 0000)**

17. Input the final operand and then press the WRITE Key. (It isn't necessary to input leading zeroes.)

EM/DM

```
00203 ADB DATA C
          DM 0000
```

WRITE

```
00204READ
NOP (000)
```

8-2-10 Instruction Search

This operation is used to find occurrences of the specified instruction in the program and is possible in any mode.

RUN	MONITOR	PROGRAM
OK	OK	OK

The ON/OFF status of any displayed bit will be shown if the PC is in RUN or MONITOR mode.

1,2,3...

1. Press the CLR Key to bring up the initial display.
2. Input the address from which the search will begin and press the Down Arrow Key. It is not necessary to input leading zeroes.

B 1 A 0 A 0 ↓

```
00100READ
TIM            001
```

3. Input the instruction to be found and press the SRCH Key. In this case, the search is for OUT 01000.

   In this case, the next OUT 01000 instruction is at address 200, as shown below.

OUT B 1 A 0 A 0 A 0 SRCH

```
00200SRCH
OUT          01000
```

4. Press the Down Arrow Key to display the instruction's operands or press the SRCH Key to search for the next occurrence of the instruction.

5. The search will continue until an END instruction or the end of Program Memory is reached. In this case, an END instruction was reached at address 397.

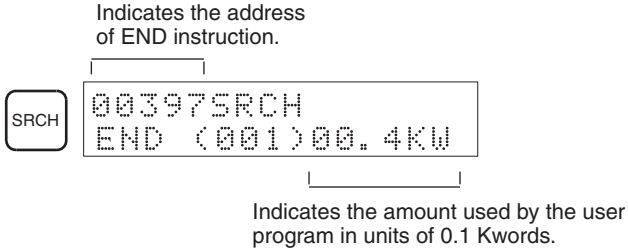

8-2-11 Bit Operand Search

This operation is used to find occurrences of the specified operand bit in the program and is possible in any mode.

RUN	MONITOR	PROGRAM
OK	OK	OK

The ON/OFF status of any displayed bit will be shown if the PC is in RUN or MONITOR mode.

1,2,3...

1. Press the CLR Key to bring up the initial display.
2. Input the operand address. It is not necessary to input leading zeroes.

3. Press the SRCH Key to begin the search.

4. Press the SRCH Key to search for the next occurrence of the operand bit.

5. The search will continue until an END instruction or the end of Program Memory is reached. In this case, an END instruction was reached.

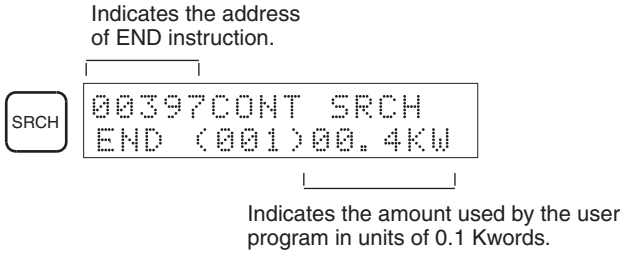

8-2-12 Inserting and Deleting Instructions

This operation is used to insert or delete instructions from the program. It is possible in PROGRAM mode only.

RUN	MONITOR	PROGRAM
No	No	OK

To demonstrate this operation, an IR 00105 NO condition will be inserted at program address 00206 and an IR 00103 NO condition deleted from address 00205, as shown in the following diagram.

Original Program

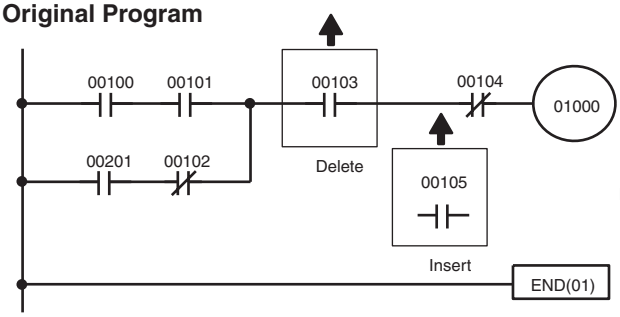

Address	Instruction	Operands
⋮	⋮	⋮
00205	AND	00103
00206	AND NOT	00104
00207	OUT	01000
00208	END(01)	-

Delete ← 00205 ; 00103 → Insert

Insertion

Follow the procedure below to insert the IR 00105 NO condition at address 00206.

1,2,3...

1. Press the CLR Key to bring up the initial display.
2. Input the address where the NO condition will be inserted and press the Down Arrow Key. It is not necessary to input leading zeroes.

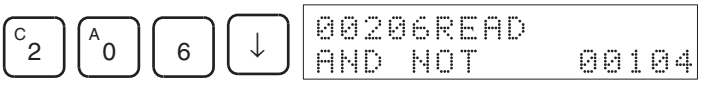

3. Input the new instruction and press the INS Key.

4. Press the Down Arrow Key to insert the new instruction.

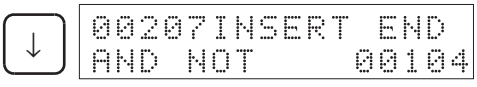

Note For instructions that require more operands (such as set values), input the operands and then press the WRITE Key.

Deletion

Follow the procedure below to delete the IR 00103 NO condition at address 00205.

1,2,3...

1. Press the CLR Key to bring up the initial display.
2. Input the address where the NO condition will be deleted and press the Down Arrow Key. It is not necessary to input leading zeroes.

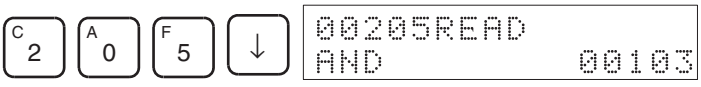

3. Press the DEL Key.

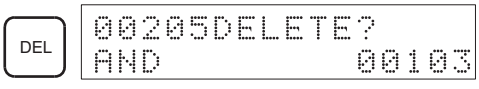

4. Press the Up Arrow Key to delete the specified instruction.

   If the instruction has more operands, the operands will be deleted automatically with the instruction.

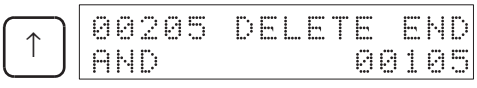

After completing the insertion and deletion procedures, use the Up and Down Arrow Keys to scroll through the program and verify that it has been changed correctly, as shown in the following diagram.

Corrected Program

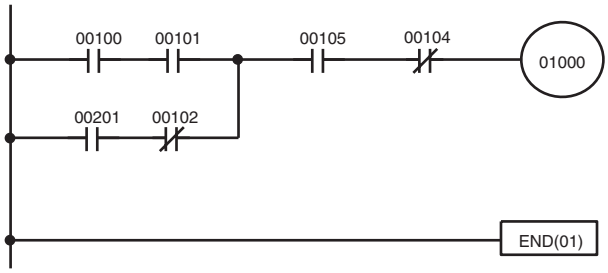

Address	Instruction	Operands
⋮	⋮	⋮
00205	AND	00105
00206	AND NOT	00104
00207	OUT	01000
00208	END(01)	-

8-2-13 Checking the Program

This operation checks for programming errors and displays the program address and error when errors are found. It is possible in PROGRAM mode only.

RUN	MONITOR	PROGRAM
No	No	OK

1,2,3...

1. Press the CLR Key to bring up the initial display.
2. Press the SRCH Key. An input prompt will appear requesting the desired check level.

3. Input the desired check level (0, 1, or 2). The program check will begin when the check level is input, and the first error found will be displayed.

Note Refer to *9-4 Programming Errors* for details on check levels and the errors that may be detected when the program is checked.

4. Press the SRCH Key to continue the search. The next error will be displayed. Continue pressing the SRCH Key to continue the search.

   The search will continue until an END instruction or the end of Program Memory is reached. A display like this will appear if the end of Program Memory is reached:

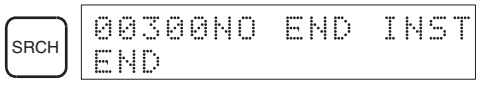

   A display like this will appear if an END instruction is reached:

No more errors exist if the END instruction is displayed.

If errors are displayed, edit the program to correct the errors and check the program again. Continue checking the program by pressing the SRCH Key again until all errors have been corrected.

8-2-14 Bit, Digit, Word Monitor

This operation is used to monitor the status of up to 16 bits and words, although only 3 can be shown on the display at any one time. Operation is possible in any mode.

RUN	MONITOR	PROGRAM
OK	OK	OK

Program Read then Monitor

When a program address is being displayed, the status of the bit or word in that address can be monitored by pressing the MONTR Key.

1,2,3...

1. Press the CLR Key to bring up the initial display.
2. Input the desired program address and press the Down Arrow Key.

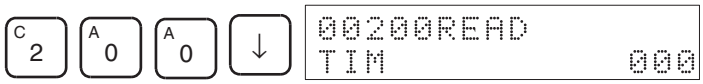

3. Press the MONTR Key to begin monitoring.

If the status of a bit is being monitored, that bit's status can be changed using the Force Set/Reset operation. Refer to *8-2-26 Force Set, Reset* for details.

If the status of a word is being monitored, that word's value can be changed using the Hexadecimal/BCD Data Modification operation. Refer to *8-2-22 Hexadecimal, BCD Data Modification, 8-2-23 Binary Data Modification, 8-2-24 Signed Decimal Data Modification,* and *8-2-25 Unsigned Decimal Data Modification* for details.

4. Press the CLR Key to end monitoring.

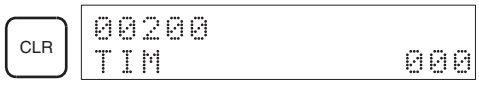

Bit Monitor

Follow the procedure below to monitor the status of a particular bit.

1,2,3...

1. Press the CLR Key to bring up the initial display.
2. Input the bit address of the desired bit and press the MONTR Key.

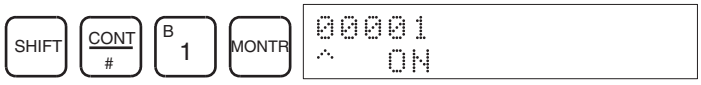

The Up or Down Arrow Key can be pressed to display the status of the previous or next bit.

In MONITOR mode or PROGRAM mode, the displayed bit's status can be changed using the Force Set/Reset operation. Refer to *8-2-26 Force Set, Reset* for details.

3. Press the CLR Key to end monitoring.

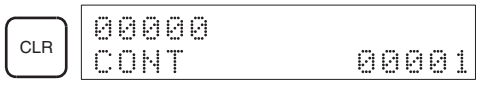

Word Monitor

Follow the procedure below to monitor the status of a particular word.

1,2,3...

1. Press the CLR Key to bring up the initial display.
2. Input the word address of the desired word.

3. Press the MONTR Key to begin monitoring.

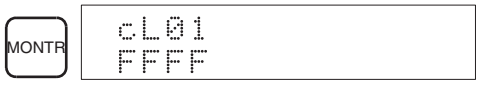

The Up or Down Arrow Key can be pressed to display the status of the previous or next word.

The displayed word's status can be changed using the Hexadecimal/BCD Data Modification operation. Refer to *8-2-22 Hexadecimal, BCD Data Modification, 8-2-23 Binary Data Modification, 8-2-24 Signed Decimal Data Modification,* and *8-2-25 Unsigned Decimal Data Modification* for details.

4. Press the CLR Key to end monitoring.

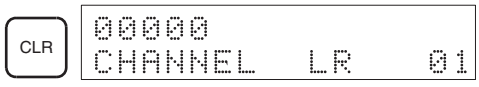

Note The operating mode can be changed without altering the current monitor display by holding down the SHIFT Key and then changing the operating mode.

Multiple Address Monitoring

The status of up to six bits and words can be monitored simultaneously, although only three can be shown on the display at any one time.

1,2,3...

1. Press the CLR Key to bring up the initial display.
2. Input the address of the first bit or word and press the MONTR Key.

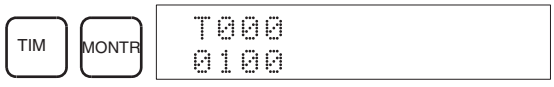

3. Repeat step 2 up to 6 times to display the next addresses to be monitored.

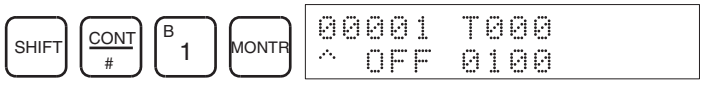

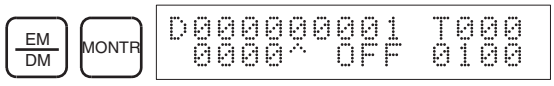

If 4 or more bits and words are being monitored, the bits and words that do not appear on the display can be displayed by pressing the MONTR Key. If the MONTR Key is pressed alone, the display will shift to the right.

If more than six bits and words are input, monitoring of the bit or word input first will be canceled.

4. Press the CLR Key to stop monitoring the leftmost bit or word and clear it from the display.

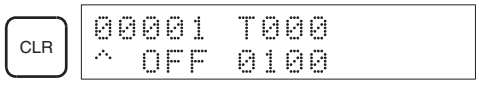

5. Press the SHIFT and CLR Keys to end monitoring altogether.

SHIFT CLR

```
00000
CONT          00001
```

Note Press the SHIFT Key, CLR Key, and then CLR Key again to return to the initial Programming Console display with the multiple address monitoring state unchanged. Press the SHIFT Key and then the MONTR Key from the initial display to return to the multiple address monitoring state. The monitoring states can be retained for 6 bits and words.
The operating mode can be changed without altering the current monitor display by holding down the SHIFT Key and then changing the operating mode.

8-2-15 Differentiation Monitor

This operation is used to monitor the up or down differentiation status of a particular bit. When detected, the up or down differentiation will be displayed and the buzzer will sound. It is possible in any mode.

RUN	MONITOR	PROGRAM
OK	OK	OK

1,2,3...

1. Monitor the status of the desired bit according to the procedure described in *8-2-14 Bit, Digit, Word Monitor*. If 2 or more bits are being monitored, the desired bit should be leftmost on the display.

   In this case the differentiation status of LR 00 will be monitored.

```
L000000001H0000
^ OFF^ OFF^ OFF
```

2. To specify up-differentiation monitoring, press the SHIFT and then the Up Arrow Key. The symbols “U@” will appear.

SHIFT ↑

```
L000000001H0000
U@OFF^ OFF^ OFF
```

Indicates waiting for the bit to turn ON.

To specify down-differentiation monitoring, press the SHIFT and then the Down Arrow Key. The symbols “D@” will appear.

SHIFT ↓

```
L000000001H0000
D@OFF^ OFF^ OFF
```

3. The buzzer will sound when the specified bit goes from off to on (for up-differentiation) or from on to off (for down-differentiation).

```
L000000001H0000
^  ON^ OFF^ OFF
```

Note The buzzer will not sound if it has been turned off.

4. Press the CLR Key to end differentiation monitoring and return to the normal monitoring display.

CLR

```
L000000001H0000
^ OFF^ OFF^ OFF
```

8-2-16 Binary Monitor

This operation is used to monitor the ON/OFF status of any word's 16 bits. It is possible in any mode.

RUN	MONITOR	PROGRAM
OK	OK	OK

1,2,3...

1. Monitor the status of the desired word according to the procedure described in *8-2-14 Bit, Digit, Word Monitor*. The desired word should be leftmost on the display if 2 or more words are being monitored.

   (Word monitor)

   ```
   c010
   0000
   ```

2. Press the SHIFT and then the MONTR Key to begin binary monitoring. The ON/OFF status of the selected word's 16 bits will be shown along the bottom of the display. A 1 indicates a bit is on, and a 0 indicates it is off.

   SHIFT MONTR

   ```
   c010 MONTR
   0000000000000000
   ```

   Bit 15 Bit 00

   The status of force-set bits is indicated by "S," and the status of a force-reset bits is indicated by "R," as shown below.

   ```
   c010 MONTR
   000S000000R0000
   ```

   Force-set bit Force-reset bit

   Note a) The status of displayed bits can be changed at this point. Refer to *8-2-23 Binary Data Modification* for details.

   b) The Up or Down Arrow Key can be pressed to display the status of the previous or next word's bits.

3. Press the CLR Key to end binary monitoring and return to the normal monitoring display.

   CLR

   ```
   c010
   0000
   ```

8-2-17 Three-Word Monitor

This operation is used to monitor the status of three consecutive words. It is possible in any mode.

RUN	MONITOR	PROGRAM
OK	OK	OK

1,2,3...

1. Monitor the status of the first of the three words according to the procedure described in *8-2-14 Bit, Digit, Word Monitor*.

   If 2 or more words are being monitored, the desired first word should be leftmost on the display.

   (Word monitor)

   ```
   c200
   89AB
   ```

2. Press the EXT Key to begin 3-word monitoring. The status of the selected word and the next two words will be displayed, as shown below. In this case, DM 0000 was selected.

```
EXT   c202 c201 c200
      0123 4567 89AB
```

The Up and Down Arrow Keys can be used to shift one address up or down.

The status of the displayed words can be changed at this point. Refer to *8-2-20 Three-Word Data Modification*.

The display can be changed to display ASCII text, which is useful when three consecutive words containing an ASCII message are displayed. Refer to *8-2-28 Hex-ASCII Display Change.*

3. Press the CLR Key to end 3-word monitoring and return to the normal monitoring display. The rightmost word on the 3-word monitor display will be monitored.

```
CLR   c200
      89AB
```

Note The operating mode can be changed without altering the current monitor display by holding down the SHIFT Key and then changing the operating mode.

8-2-18 Signed Decimal Monitor

This operation converts the contents of the specified word from signed hexadecimal (two's complement format) to signed decimal for display. The operation can be executed while using I/O monitoring, multiple address monitoring or 3-word monitoring.

RUN	MONITOR	PROGRAM
OK	OK	OK

1,2,3...

1. Monitor the word that is to be used for decimal monitor with sign. During multiple address monitoring, the leftmost word will be converted.

```
c200 cL0020000
FFF0 0000^ OFF
```

(Multiple address monitor)

2. Press the SHIFT+TR Keys to display the leftmost word as signed decimal.

```
SHIFT TR   c200
           -00016
```

At this point, the contents of the displayed word can be changed with a signed-decimal input. Refer to *8-2-24 Signed Decimal Data Modification*.

3. Press the CLR Key or the SHIFT+TR Keys to end the unsigned decimal display and return to normal monitoring.

```
CLR   c200 cL0020000
      FFF0 0000^ OFF
```

8-2-19 Unsigned Decimal Monitor

This operation is used to convert hexadecimal data in a word to unsigned decimal for display. The operation can be executed while using I/O monitoring, multiple address monitoring or 3-word monitoring.

RUN	MONITOR	PROGRAM
OK	OK	OK

1,2,3...

1. Monitor the word that is to be used for decimal monitor without sign. During multiple address monitoring, the leftmost word will be converted.

```
c200 cL0020000
FFF0 0000^ OFF
```

Multiple address monitoring

2. Press the SHIFT+TR+NOT Keys to display the leftmost word as unsigned decimal.

SHIFT TR NOT

```
c200
65520
```

At this point, the contents of the displayed word can be changed with an unsigned-decimal input. Refer to *8-2-25 Unsigned Decimal Data Modification*.

3. Press the CLR Key or the SHIFT+TR Keys to end the unsigned decimal display and return to normal monitoring.

CLR

```
c200 cL0020000
FFF0 0000^ OFF
```

8-2-20 Three-Word Data Modification

This operation is used to change the contents of one or more of the 3 consecutive words displayed in the Three-Word Monitor operation. It is possible in MONITOR or PROGRAM mode only.

RUN	MONITOR	PROGRAM
No	OK	OK

⚠ **Caution** Before changing the contents of I/O memory, be sure that the changes will not cause equipment to operate unexpectedly or dangerously. In particular, take care when changing the status of output bits. The PC continues to refresh I/O bits even if the PC is in PROGRAM mode, so devices connected to output points on the CPU Unit, Expansion Units, or Expansion I/O Units may operate unexpectedly.

1,2,3...

1. Monitor the status of the desired words according to the procedure described *8-2-17 Three-Word Monitor*.

```
D0002D0001D0000
 0123 4567 89AB
```

(Three-word monitor)

2. Press the CHG Key to begin 3-word data modification. The cursor will appear next to the contents of the leftmost word.

CHG

```
D0002  3CH CHG?
▓0123 4567 89AB
```

3. Input the new value for the leftmost word on the display and press the CHG Key if more changes will be made.

(Input the new value and press the WRITE Key to write the changes in memory if no more changes will be made.)

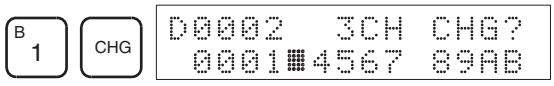

4. Input the new value for the middle word on the display and press the CHG Key if the rightmost word will be changed. Input the new value and press the WRITE Key to write the changes in memory if the rightmost word will not be changed. (In this case, it will not.)

Note If the CLR Key is pressed before the WRITE Key, the operation will be cancelled and the 3-word monitor display will return without any changes in data memory.

8-2-21 Changing Timer, Counter SV

There are two operations that can be used to change the SV of a timer or counter. They are possible in MONITOR or PROGRAM mode only. In MONITOR mode, the SV can be changed while the program is being executed.

RUN	MONITOR	PROGRAM
No	OK	OK

The timer or counter SV can be changed either by inputting a new value or by incrementing or decrementing the current SV.

Inputting a New SV Constant

This operation can be used to input a new SV constant, as well as to change an SV from a constant to a word address designation and vice versa. The following examples show how to input a new SV constant and how to change the SV from a constant to an address.

1,2,3...

1. Press the CLR Key to bring up the initial display.
2. Display the desired timer or counter.

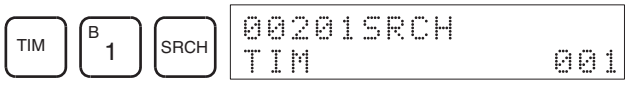

3. Press the Down Arrow Key and then the CHG Key.

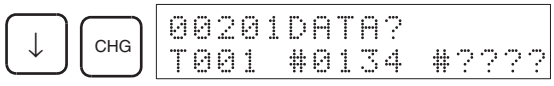

4. At this point a new SV constant can be input or the SV constant can be changed to a word address designation
   a) To input a new SV constant, input the constant and press the WRITE Key.

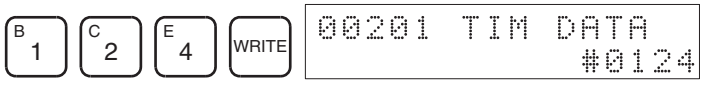

   b) To change to a word address designation, input the word address and press the WRITE Key.

Incrementing and Decrementing a Constant

This operation can be used to increment and decrement an SV constant. It is possible only when the SV has been entered as a constant.

1,2,3...

1. Press the CLR Key to bring up the initial display.
2. Display the desired timer or counter.

TIM SRCH

```
00201SRCH
TIM          000
```

3. Press the Down Arrow, CHG, and then the EXT Key.

↓ CHG EXT

```
00201DATA ? U/D
T000 #0123 #0123
```

The constant on the left is the old SV and the constant on the right will become the new SV constant in step 5.

4. Press the Up and Down Arrow Keys to increment and decrement the constant on the right. (In this case the SV is incremented once.)

↓

```
00201DATA ? U/D
T000 #0123 #0124
```

5. Press the CLR Key twice to change the timer's SV to the new value.

CLR CLR

```
00201 TIM DATA
            #0124
```

8-2-22 Hexadecimal, BCD Data Modification

This operation is used to change the BCD or hexadecimal value of a word being monitored using the procedure described in *8-2-14 Bit, Digit, Word Monitor*. It is possible in MONITOR or PROGRAM mode only.

RUN	MONITOR	PROGRAM
No	OK	OK

Words SR 253 to SR 255 cannot be changed.

⚠ **Caution** Before changing the contents of I/O memory, be sure that the changes will not cause equipment to operate unexpectedly or dangerously. In particular, take care when changing the status of output bits. The PC continues to refresh I/O bits even if the PC is in PROGRAM mode, so devices connected to output points on the CPU Unit, Expansion Units, or Expansion I/O Units may operate unexpectedly.

1,2,3...

1. Monitor the status of the desired word according to the procedure described in *8-2-14 Bit, Digit, Word Monitor*. If two or more words are being monitored, the desired word should be leftmost on the display.

```
D0000
 0119
```

(Word monitor)

2. Press the CHG Key to begin hexadecimal, BCD data modification.

CHG

```
     PRES VAL?
D0000 0119  ????
```

3. Input the new PV and press the WRITE Key to change the PV.

The operation will end and the normal monitoring display will return when the WRITE Key is pressed.

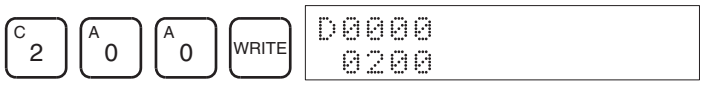

8-2-23 Binary Data Modification

This operation is used to change the status of a word's bits when the word is monitored using the procedure described in *8-2-16 Binary Monitor*. It is possible in MONITOR or PROGRAM mode only.

RUN	MONITOR	PROGRAM
No	OK	OK

Bits SR 25300 to SR 25507 and timer/counter flags cannot be changed.

⚠ **Caution** Before changing the contents of I/O memory, be sure that the changes will not cause equipment to operate unexpectedly or dangerously. In particular, take care when changing the status of output bits. The PC continues to refresh I/O bits even if the PC is in PROGRAM mode, so devices connected to output points on the CPU Unit, Expansion Units, or Expansion I/O Units may operate unexpectedly.

1,2,3...

1. Monitor the status of the desired word according to the procedure described *8-2-16 Binary Monitor*.

   (BInary monitor)

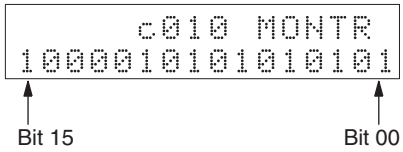

2. Press the CHG Key to begin binary data modification.

   A flashing cursor will appear over bit 15. The cursor indicates which bit can be changed.

3. Three sets of keys are used to move the cursor and change bit status:
   a) Use the Up and Down Arrow Keys to move the cursor to the left and right.

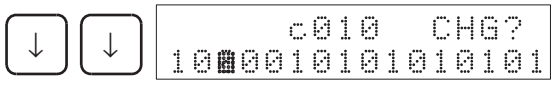

   b) Use the 1 and 0 Keys to change a bit's status to on or off. The cursor will move one bit to the right after one of these keys is pressed.

   c) Use the SHIFT+SET and SHIFT+RESET Keys to force-set or force-reset a bit's status. The cursor will move one bit to the right after one of these keys is pressed. The NOT Key will clear force-set or force-reset status.

   Note Bits in the DM Area cannot be force-set or force-reset.

4. Press the WRITE Key to write the changes in memory and return to the binary monitor.

WRITE

```
      c010  MONTR
1010010101010101
```

8-2-24 Signed Decimal Data Modification

This operation is used to change the decimal value of a word being monitored as signed decimal data, within a range of –32,768 to 32,767. The contents of the specified word are converted automatically to signed hexadecimal (two's complement format).

Words SR 253 to SR 255 cannot be changed.

RUN	MONITOR	PROGRAM
No	OK	OK

⚠ **Caution** Before changing the contents of I/O memory, be sure that the changes will not cause equipment to operate unexpectedly or dangerously. In particular, take care when changing the status of output bits. The PC continues to refresh I/O bits even if the PC is in PROGRAM mode, so devices connected to output points on the CPU Unit, Expansion Units, or Expansion I/O Units may operate unexpectedly.

1,2,3...

1. Monitor (signed decimal) the status of the word for which the present value is to be changed.

```
D0200
-00016
```

(Signed decimal monitor)

2. Press the CHG Key to begin decimal data modification.

CHG

```
      PRES VAL?
D0200-00016
```

3. Input the new PV and press the WRITE Key to change the PV. The operation will end and the signed-decimal monitoring display will return when the WRITE Key is pressed.

   The PV can be set within a range of –32,768 and 32,767. Use the SET Key to input a positive number, and use the RESET Key to input a negative number.

RESET D 3 C 2 7 6 8 WRITE

```
D0200
-32768
```

If an erroneous input has been made, press the CLR Key to restore the status prior to the input. Then enter the correct input.

The buzzer will sound if a value outside the specified range is input, allowing no writing.

8-2-25 Unsigned Decimal Data Modification

This operation is used to change the decimal value of a word being monitored as unsigned decimal data, within a range of 0 to 65,535. A change into hexadecimal data is made automatically.

Words SR 253 to SR 255 cannot be changed.

RUN	MONITOR	PROGRAM
No	OK	OK

⚠ **Caution** Before changing the contents of I/O memory, be sure that the changes will not cause equipment to operate unexpectedly or dangerously. In particular, take care when changing the status of output bits. The PC continues to refresh I/O bits even if the PC is in PROGRAM mode, so devices connected to output points on the CPU Unit, Expansion Units, or Expansion I/O Units may operate unexpectedly.

1,2,3...

1. Monitor (unsigned decimal) the status of the word for which the present value is to be changed.

(Unsigned decimal monitor)

```
c200
65520
```

2. Press the CHG Key to begin decimal data modification.

[CHG]

```
     PRES VAL?
c200 65520
```

3. Input the new PV and press the WRITE Key to change the PV. The operation will end and the decimal-without-sign monitoring display will return when the WRITE Key is pressed.

   The PV can be set within a range of 0 to 65,535.

[D 3] [C 2] [7] [6] [8] [WRITE]

```
c200
32768
```

If an erroneous input has been made, press the CLR Key to restore the status prior to the input. Then enter the correct input.

The buzzer will sound if a value outside the specified range is input, allowing no writing.

8-2-26 Force Set, Reset

This operation is used to force bits ON (force set) or OFF (force reset) and is useful when debugging the program or checking output wiring. It is possible in MONITOR or PROGRAM mode only.

RUN	MONITOR	PROGRAM
No	OK	OK

⚠ **Caution** Before changing the contents of I/O memory, be sure that the changes will not cause equipment to operate unexpectedly or dangerously. In particular, take care when changing the status of output bits. The PC continues to refresh I/O bits even if the PC is in PROGRAM mode, so devices connected to output points on the CPU Unit, Expansion Units, or Expansion I/O Units may operate unexpectedly.

1,2,3...

1. Monitor the status of the desired bit according to the procedure described in *8-2-14 Bit, Digit, Word Monitor.* If two or more words are being monitored, the desired bit should be leftmost on the display.

```
0000020000
^ OFF^  ON
```

(Multiple address monitor)

2. Press the SET Key to force the bit ON or press the RESET Key to force the bit OFF.

SET

```
0000020000
▦  ON^  ON
```

The cursor in the lower left corner of the display indicates that the force set/reset is in progress. Bit status will remain ON or OFF only as long as the key is held down; the original status will return one cycle after the key is released.

3. Press the SHIFT and SET Keys or SHIFT and RESET Keys to maintain the status of the bit after the key is released. In this case, the force-set status is indicated by an “S” and the force-reset status is indicated by an “R.”

   To return the bit to its original status, press the NOT Key or perform the Clear Force Set/Reset operation. Refer to *8-2-27 Clear Force Set/Reset* for details.

   Forced status will also be cleared in the following cases:

   a) When the PC’s operating mode is changed (although the forced status will not be cleared when the mode is changed from PROGRAM to MONITOR if SR 25211 is ON)
   b) When the PC stops because a fatal error occurred
   c) When the PC stops because of a power interruption
   d) When the Clear Force Set/Reset Operation is performed

8-2-27 Clear Force Set/Reset

This operation is used to restore the status of all bits which have been force set or reset. It is possible in MONITOR or PROGRAM mode only.

RUN	MONITOR	PROGRAM
No	OK	OK

⚠ **Caution** Before changing the contents of I/O memory, be sure that the changes will not cause equipment to operate unexpectedly or dangerously. In particular, take care when changing the status of output bits. The PC continues to refresh I/O bits even if the PC is in PROGRAM mode, so devices connected to output points on the CPU Unit, Expansion Units, or Expansion I/O Units may operate unexpectedly.

1,2,3...

1. Press the CLR Key to bring up the initial display.
2. Press the SET and then the RESET Key. A confirmation message will appear.

SET RESET

```
00000FORCE RELE?
```

Note If you mistakenly press the wrong key, press CLR and start again from the beginning.

3. Press the NOT Key to clear the force-set/reset status of bits in all data areas.

8-2-28 Hex-ASCII Display Change

This operation is used to convert word data displays back and forth between 4-digit hexadecimal data and ASCII. It is possible in any mode.

The displayed PV of the timer or counter cannot be changed.

RUN	MONITOR	PROGRAM
OK	OK	OK

1,2,3...

1. Monitor the status of the desired word(s) according to the procedure described in *8-2-14 Bit, Digit, Word Monitor*. While the multiple addresses are being monitored, the leftmost word is subject to change.

(Multiple address monitor)

2. Press the TR Key to switch to ASCII display. The display will toggle between hexadecimal and ASCII displays each time the TR Key is pressed.

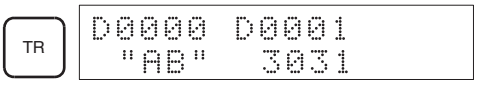

Note

1. A message contained in three words can be displayed by using ASCII display in combination with the Three-word monitor operation.
2. The Hexadecimal, BCD Data Modification Operation can be used while displaying ASCII data. Input values in 4-digit hexadecimal.

8-2-29 Displaying the Cycle Time

This operation is used to display the current average cycle time (scan time). It is possible only in RUN or MONITOR mode while the program is being executed.

RUN	MONITOR	PROGRAM
OK	OK	No

1,2,3...

1. Press the CLR Key to bring up the initial display.
2. Press the MONTR Key to display the cycle time.

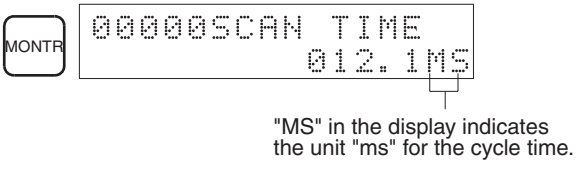

There might be differences in displayed values when the MONTR Key is pressed repeatedly. These differences are caused by changing execution conditions.

8-2-30 Reading and Setting the Clock

This operation is used to read or set the CPU's clock. The clock can be read in any mode, but can be set in MONITOR or PROGRAM mode only.

Operation	RUN	MONITOR	PROGRAM
Read clock	OK	OK	OK
Set clock	No	OK	OK

1,2,3...

1. Press the CLR Key to bring up the initial display.
2. Press the FUN Key, SHIFT Key, and then the MONTR Key to display the date and time.

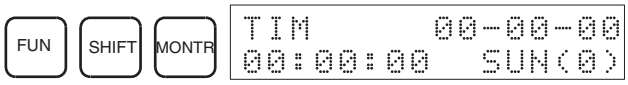

3. Press the CHG Key to change the date and/or time.

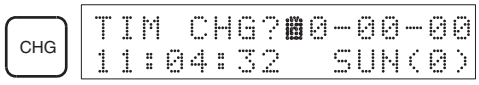

The digit that can be changed will flash. If necessary, input a new value with the Up and Down Arrow Keys or Numeric Keys. Press the CHG Key to move the cursor to the next digit. The following table shows the setting ranges for each value.

Year	Month	Day	Hour	Minute	Second	Day-of-week
00 to 99	01 to 12	01 to 31	00 to 23	00 to 59	00 to 59	0 to 6 (SUN to SAT)

4. Press the WRITE Key to write the new value.

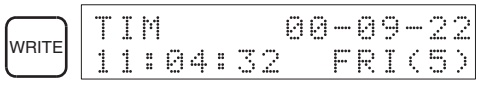

Press the CLR Key to return to the initial display.

8-3 Programming Example

This section demonstrates all of the steps needed to write a program with the Programming Console.

8-3-1 Preparatory Operations

Use the following procedure when writing a program to the CPM2C-S for the first time.

1,2,3...

1. Set the Programming Console's mode switch to PROGRAM mode and turn on the CPM2C-S' power supply. The password input display will appear on the Programming Console.

2. Enter the password by pressing the CLR and then the MONTR Key.

3. Clear the CPM2C-S' memory by pressing the CLR, SET, NOT, RESET, and then the MONTR Key. Press the CLR Key several times if memory errors are displayed.

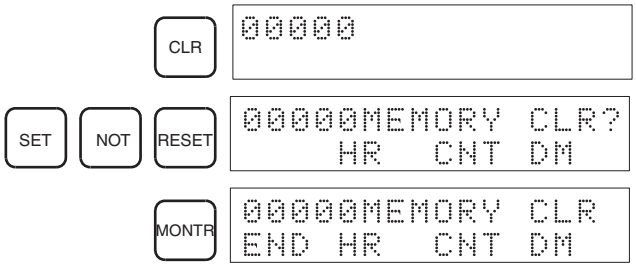

4. Display and clear error messages by pressing the CLR, FUN, and then the MONTR Key. Continue pressing the MONTR Key until all error messages have been cleared.

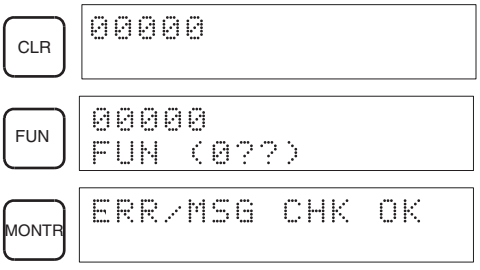

5. Press the CLR Key to bring up the initial programming display (program address 00000). The new program can be written at this point.

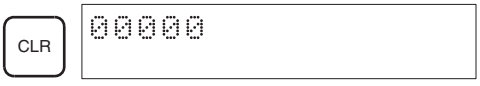

⚠ **Caution** Check the system thoroughly before starting or stopping the CPM2C-S to prevent any accidents that might occur when the program is first started.

8-3-2 Example Program

The following ladder program will be used to demonstrate how to write a program with the Programming Console. This program makes output IR 01000 flicker ON/OFF (one second ON, one second OFF) ten times after input IR 00000 is turned ON.

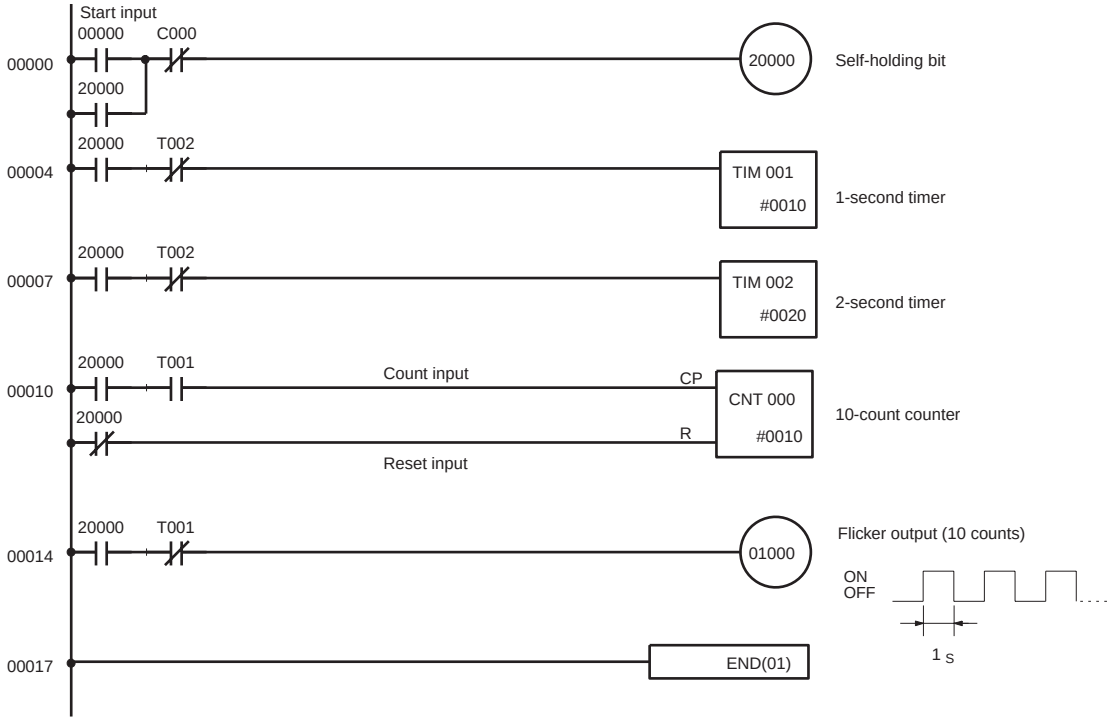

The mnemonic list for the example program is shown in the following table. The steps required to enter this program from a Programming Console are described in *8-3-3 Programming Procedures*.

Address	Instruction	Data		Programming example procedures in *8-3-3 Programming Procedures*
00000	LD		00000	(1) Self-holding bit
00001	OR		20000	
00002	AND NOT	C	000	
00003	OUT		20000	
00004	LD		20000	(2) 1-second timer
00005	AND NOT	T	002	
00006	TIM		001	
		#	0010	
00007	LD		20000	(3) 2-second timer
00008	AND NOT	T	002	
00009	TIM		002	
		#	0020	
00010	LD		20000	(4) 10-count counter
00011	AND	T	001	
00012	LD NOT		20000	
00013	CNT		000	
		#	0010	
00014	LD		20000	(5) Flicker output (10 counts)
00015	AND NOT	T	001	
00016	OUT		01000	
00017	END (01)		---	(6) END(01) instruction

8-3-3 Programming Procedures

The example program will be written to the CPM2C-S according to the mnemonic list in *8-3-2 Example Program*. The procedure is performed beginning with the initial display. (Clear the memory before entering a new program.)

Note If an error occurs while inputting the program, refer to *9-3 Programming Console Operation Errors* for details on correcting the error. Refer to the relevant *Support Software Operation Manual* for details on errors that appear when operating the SSS or SYSMAC-CPT Support Software.

(1) Inputting the Self-holding Bit

1,2,3... 1. Input the normally open condition IR 00000.
(It isn't necessary to input leading zeroes.)

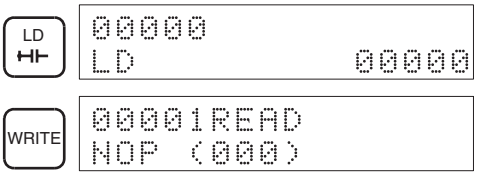

2. Input the OR condition IR 20000.

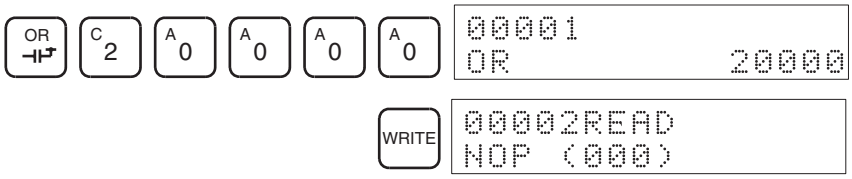

3. Input the normally closed AND condition C000.
(It isn't necessary to input leading zeroes.)

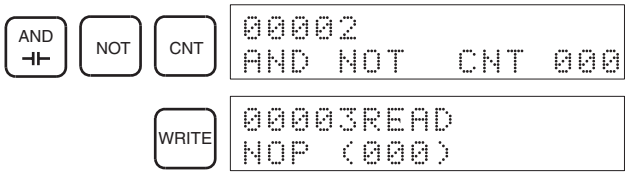

4. Input the OUT instruction IR 20000.

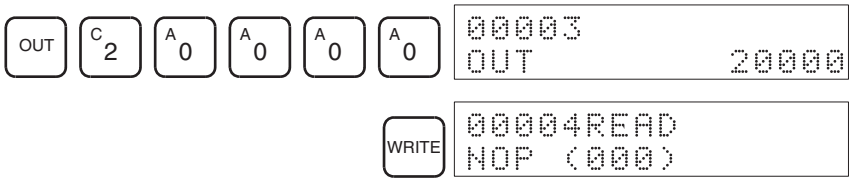

(2) Inputting the One-second Timer

1,2,3... 1. Input the normally open condition IR 20000.

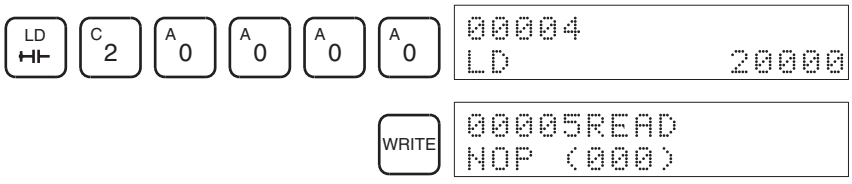

2. Input the normally closed AND condition T002.
   (It isn't necessary to input leading zeroes.)

AND NOT TIM C 2
```
00005
AND NOT   TIM 002
```
WRITE
```
00006READ
NOP (000)
```

3. Input the 1-second timer T001.

TIM B 1
```
00006
TIM           001
```
WRITE
```
00006 TIM DATA
            #0000
```

4. Input the SV for T001 (#0010 = 1.0 s).

B 1 A 0
```
00006 TIM DATA
            #0010
```
WRITE
```
00007READ
NOP (000)
```

(3) Inputting the Two-second Timer

The following key operations are used to input the 2-second timer.

1,2,3... 1. Input the normally open condition IR 20000.

LD C 2 A 0 A 0 A 0 A 0
```
00007
LD          20000
```
WRITE
```
00008READ
NOP (000)
```

2. Input the normally closed AND condition T002.
   (It isn't necessary to input leading zeroes.)

AND NOT TIM C 2
```
00008
AND NOT   TIM 002
```
WRITE
```
00009READ
NOP (000)
```

3. Input the 2-second timer T002.

TIM C 2
```
00009
TIM           002
```
WRITE
```
00009 TIM DATA
            #0000
```

4. Input the SV for T002 (#0020 = 2.0 s).

C 2 A 0
```
00009 TIM DATA
            #0020
```
WRITE
```
00010READ
NOP (000)
```

(4) Inputting the 10-count Counter

The following key operations are used to input the 10-count counter.

1,2,3... 1. Input the normally open condition IR 20000.

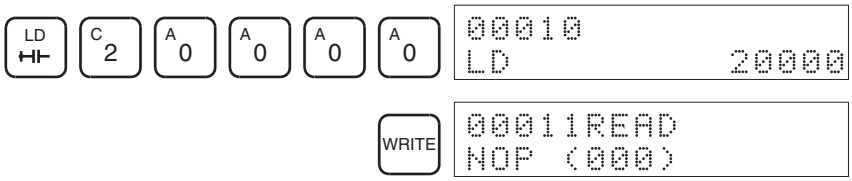

2. Input the normally open AND condition T001.
(It isn't necessary to input leading zeroes.)

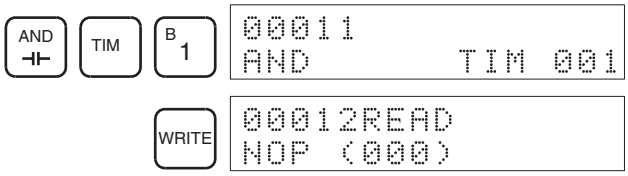

3. Input the normally closed condition IR 20000.

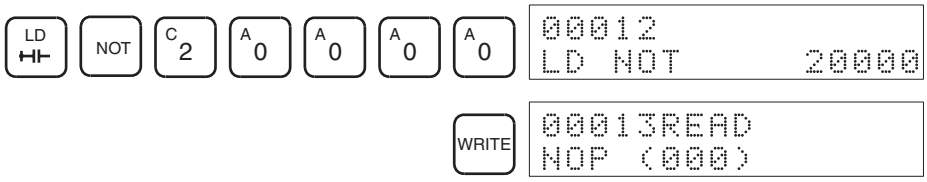

4. Input the counter 000.

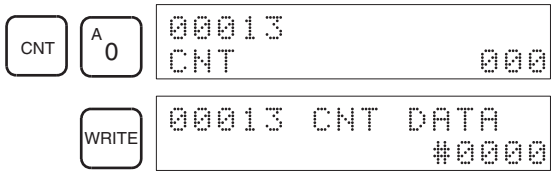

5. Input the SV for counter 000 (#0010 = 10 counts).

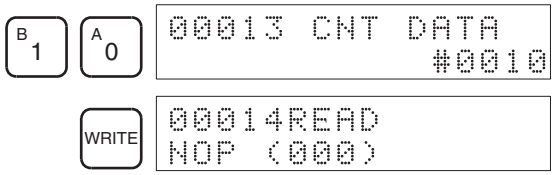

(5) Inputting the Flicker Output

1,2,3... 1. Input the normally open condition IR 20000.

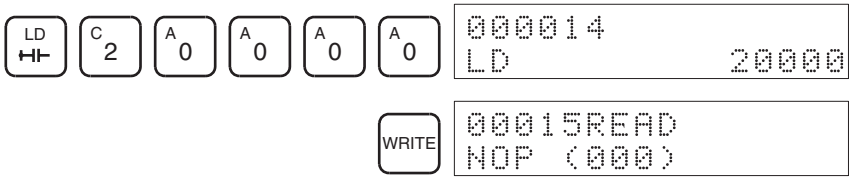

2. Input the normally closed AND condition T001.
   (It isn't necessary to input leading zeroes.)

AND ⊣⊢ NOT TIM B 1

```
00015
AND NOT   TIM 001
```

WRITE

```
00016READ
NOP (000)
```

3. Input the OUT instruction IR 01000.
   (It isn't necessary to input leading zeroes.)

OUT B 1 A 0 A 0 A 0

```
00016
OUT          01000
```

WRITE

```
00017READ
NOP (000)
```

(6) Inputting the END(001) Instruction

Input END(01). (The display shows three digits in the function code, but only the last two digits are input for CPM2C-S PCs.)

FUN

```
00017
FUN (0??)
```

A 0 B 1

```
00017
END (001)
```

WRITE

```
00018READ
NOP (000)
```

8-3-4 Checking the Program

Check the program syntax in PROGRAM mode to make sure that the program has been input correctly.

1,2,3...

1. Press the CLR Key to bring up the initial display.

CLR

```
00000
```

2. Press the SRCH Key. An input prompt will appear requesting the desired check level.

SRCH

```
00000PROG CHK
CHK LBL   (0-2)?
```

3. Input the desired check level (0, 1, or 2). The program check will begin when the check level is input, and the first error found will be displayed. If no errors are found, the following display will appear.

A 0

```
00017PROG CHK
END (001)00.1KW
```

Note Refer to *9-4 Programming Errors* for details on check levels and the programming errors that may be displayed during a program check.

4. Press the SRCH Key to continue the search. The next error will be displayed. Continue pressing the SRCH Key to continue the search.

   The search will continue until an END(01) instruction or the end of Program Memory is reached.

If errors are displayed, edit the program to correct the errors and check the program again. Continue checking the program until all errors have been corrected.

8-3-5 Test Run in MONITOR Mode

Switch the CPM2C-S in MONITOR mode and check the operation of the program.

1,2,3...

1. Set the Programming Console's mode switch to MONITOR mode.

2. Press the CLR Key to bring up the initial display.

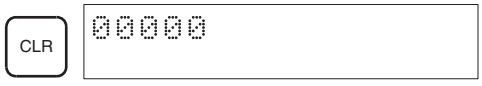

3. Force-set the start input bit (IR 00000) from the Programming Console to start the program.

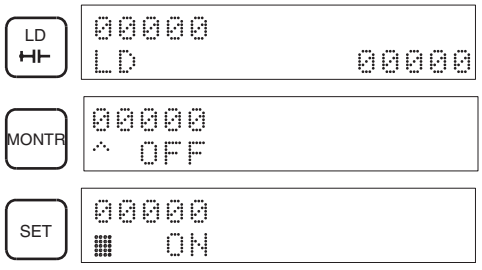

The cursor in the lower left corner of the display indicates that the force set is in progress. The bit will remain ON as long as the Set Key is held down.

4. The output indicator for output IR 01000 will flash ten times if the program is operating correctly. The indicator should go OFF after ten one-second flashes.

   There is a mistake in the program if the output indicator doesn't flash. In this case, check the program and force set/reset bits to check operation.

SECTION 9
Test Runs and Error Processing

This section describes procedures for test runs of CPM2C-S operation, self-diagnosis functions, and error processing to identify and correct the hardware and software errors that can occur during PC operation.

9-1 Initial System Checks and Test Run Procedure 202
9-1-1 Initial System Checks. 202
9-1-2 Flash Memory Precautions. 202
9-1-3 CPM2C-S Test Run Procedure. 202
9-2 Self-diagnostic Functions 203
9-2-1 Identifying Errors 203
9-2-2 User-defined Errors 204
9-2-3 Non-fatal Errors 205
9-2-4 Other Errors 205
9-2-5 Fatal Errors. 206
9-3 Programming Console Operation Errors 206
9-4 Programming Errors 207
9-5 Troubleshooting Flowcharts 208
9-6 Maintenance Inspections 216
9-7 Battery Replacement 217

9-1 Initial System Checks and Test Run Procedure

9-1-1 Initial System Checks

Check the following items after setting up and wiring the CPM2C-S, but before performing a test run.

Item	Points to check
Power supply and I/O connections	Is the wiring correct? Are the terminals securely tightened? Are there any shorts between crimp terminals or wires? Refer to *3-4 Wiring and Connections* for details.
Connecting cables	Are the cables all connected correctly and locked? Refer to *3-4 Wiring and Connections* for details.
Protective label	Has the protective label been removed?

Note

1. Always clear memory before beginning to program the CPM2C-S. Although memory is cleared before the CPU Unit is shipped, the contents of the DM, HR, AR, and counter areas may change in transit. See *8-2-2 Clearing Memory* for details on the All Clear operation.
2. See *1-3-3 Operating Mode at Startup* to determine what mode the CPM2C-S will enter when the power is turned ON.

9-1-2 Flash Memory Precautions

Observe the following precautions to protect the flash memory and ensure proper operation.

1,2,3...

1. If changes are made in the read-only DM area (DM 6144 through DM 6599) or PC Setup (DM 6600 through DM 6655), the PC's operating mode must be changed to write the new contents to flash memory. If backup battery is changed before the changes are written to flash memory, the changes will be lost.
   The changes can be saved by switching the CPM2C-S to RUN or MONITOR mode or turning the CPM2C-S OFF and then ON again.
2. When contents of the program, read-only DM (DM 6144 through DM 6599), or PC Setup (DM 6600 through DM 6655) have been changed, startup processing will take up to 1,200 ms longer than usual. Be sure to take this one-time startup delay into account if it may affect operations.
3. If one of the following three operations is performed in MONITOR or RUN mode, the CPM2C-S' cycle time will be extended by up to 1,200 ms and interrupts will be disabled while the program or PC Setup is being overwritten.
   - Program changes with the online edit operation
   - Changes to the read-only DM area (DM 6144 through DM 6599)
   - Changes to the PC Setup (DM 6600 through DM 6655)

   A "SCAN TIME OVER" error won't occur during these operations. Be sure to take this delay in the CPM2C-S' I/O response times into account when performing online editing.

9-1-3 CPM2C-S Test Run Procedure

1,2,3...

1. Power Supply Application
   a) Check the CPM2C-S' power supply voltage and terminal connections.
   b) Check the I/O devices' power supply voltage and terminal connections.
   c) Turn ON the power supply and check that the "PWR" indicator lights.

d) Use a Programming Device to set the CPM2C-S to PROGRAM mode.

2. I/O Wiring Checks
   a) With the CPM2C-S in PROGRAM mode, check the output wiring by turning ON the output bits with the force set and force reset operations. Refer to *8-2-26 Force Set, Reset* for details.
   b) Check the input wiring with the CPM2C-S' input indicators or a Programming Device's monitor operations.
3. Test Run
   a) Use a Programming Device to set the CPM2C-S to RUN or MONITOR mode and check that the "RUN" indicator lights.
   b) Check the sequence of operation with the force set/reset operations, etc.
4. Debugging

   Correct any programming errors that are detected.
5. Saving the Program
   a) Use a Programming Device to write the program to a backup floppy disk.
   b) Print out a hard copy of the program with a printer.

Note Refer to *SECTION 8 Using Programming Devices* for details on the Support Software and Programming Console operations.

9-2 Self-diagnostic Functions

The CPM2C-S is equipped with a variety of self-diagnostic functions to help identify and correct errors and reduce down time.

9-2-1 Identifying Errors

An error can be identified by the error message displayed on a Programming Device, error flags in the AR and SR areas, and the error code output to SR 253.

Fatal and Non-fatal Errors

PC errors are divided into 2 categories based on the severity of the errors. The status of the ERR/ALM indicator (lit or flashing) shows which type of error has occurred.

ERR/ALM Lit (Fatal Error)

Fatal errors are serious errors which stop CPM2C-S operation. There are two ways to restart operation:

- Turn the PC OFF and then ON again.
- Use a Programming Device to switch the PC to PROGRAM mode, and read/clear the error.

ERR/ALM Flashing (Non-fatal Error)

Non-fatal errors are less serious errors which don't stop CPM2C-S operation.

Communications Errors

The LED indicators and AR area flags indicate when a CompoBus/S communications error, RS-232C port error, or peripheral port error has occurred.

CompoBus/S Communications Error

When an error occurs in CompoBus/S communications, the SD and RD indicators will be OFF and the ERC indicator will be ON. Check the Slaves and the transmission lines and restart communications.

RS-232C Port Error

When an error occurs in communications through the RS-232C port, the COMM indicator will be OFF and the RS-232C Communications Error Flag (AR 0804) will be ON. Check the cables and restart communications.

Peripheral Port Error

When an error occurs in communications through the peripheral port, the COMM indicator will be OFF and the Peripheral Port Communications Error Flag (AR 0812) will be ON. Check the cables and restart communications.

Error Messages

When an error is detected, a corresponding error message will be displayed on the Programming Console or other Programming Device connected to the PC.

Error Flags

When a hardware error is detected, the corresponding error flag in the AR or SR area will be turned ON.

Error Code

When an error is detected, a specific 2-digit hexadecimal error code is output to SR 25300 to SR 25307. The error code and time of occurrence are also output to the Error Log Area (DM 2000 to DM 2021).

⚠ WARNING Emergency stop circuits, interlock circuits, limit circuits, and similar safety measures must be provided in external control circuits (i.e., not in the Programmable Controller) to ensure safety in the system if an abnormality occurs due to malfunction of the PC or another external factor affecting the PC operation. Not providing proper safety measures may result in serious accidents.

⚠ WARNING The PC will turn OFF all outputs when its self-diagnosis function detects any error or when a severe failure alarm (FALS) instruction is executed. External safety measures must be provided to ensure safety in the system. Not providing proper safety measures may result in serious accidents.

9-2-2 User-defined Errors

There are three instructions that can be used to define errors or messages. FAL(06) causes a non-fatal error, FAL(07) causes a fatal error, and MSG(46) sends a message to the Programming Console or host computer connected to the PC.

FAILURE ALARM – FAL(06)

FAL(06) is an instruction that causes a non-fatal error. The following will occur when an FAL(06) instruction is executed:

1,2,3...

1. The ERR/ALM indicator on the CPU Unit will flash. PC operation will continue.
2. The instruction's 2-digit BCD FAL number (01 to 99) will be written to SR 25300 to SR 25307.

The FAL numbers can be set arbitrarily to indicate particular conditions, but the same number should not be used as both an FAL number and an FALS number.

To clear an FAL error, correct the cause of the error and then execute FAL 00 or use a Programming Device to clear the error.

SEVERE FAILURE ALARM – FALS(07)

FALS(07) is an instruction that causes a fatal error. The following will occur when an FALS(07) instruction is executed:

1,2,3...

1. Program execution will be stopped and all outputs will be turned OFF.
2. The ERR/ALM indicator on the CPU Unit will be lit.

3. The instruction's 2-digit BCD FALS number (01 to 99) will be written to SR 25300 to SR 25307.

The FALS numbers can be set arbitrarily to indicate particular conditions, but the same number should not be used as both an FAL number and an FALS number.

To clear an FALS error, use a Programming Device to switch the PC to PROGRAM Mode, correct the cause of the error, and then clear the error.

MESSAGE – MSG(46)

MSG(46) is used to display a message on a Programming Device connected to the CPM2C-S. The message, which can be up to 16 characters long, is displayed when the instruction's execution condition is ON.

9-2-3 Non-fatal Errors

PC operation and program execution will continue after one or more of these errors have occurred. Although PC operation will continue, the cause of the error should be corrected and the error cleared as soon as possible.

When one of these errors occurs, the POWER and RUN indicators will remain lit and the ERR/ALM indicator will flash.

Message	FAL No.	Meaning and appropriate response
SYS FAIL FAL** (** is 01 to 99 or 9B.)	01 to 99	An FAL(06) instruction has been executed in the program. Check the FAL number to determine conditions that would cause execution, correct the cause, and clear the error.
	9B	An error has been detected in the PC Setup. Check flags AR 1300 to AR 1302, and correct as directed. AR 1300 ON: An incorrect setting was detected in the PC Setup (DM 6600 to DM 6614) when power was turned ON. Correct the settings in PROGRAM Mode and turn ON the power again. AR 1301 ON: An incorrect setting was detected in the PC Setup (DM 6615 to DM 6644) when switching to RUN or MONITOR mode. Correct the settings in PROGRAM Mode and switch to RUN or MONITOR mode again. AR 1302 ON: An incorrect setting was detected in the PC Setup (DM 6645 to DM 6655) during operation. Correct the settings and clear the error.
SCAN TIME OVER	F8	The cycle time has exceeded 100 ms. (SR 25309 will be ON.) This indicates that the program cycle time is longer than recommended. Reduce cycle time if possible. (The CPM2C-S can be set so that this error won't be detected.)
Battery error (no message)	F7	If the Low Battery Detection Switch is ON and the voltage of the CPM2C-BAT01 backup battery is below the minimum level, the ERR/ALM indicator will flash and SR 25308 will be turned ON. (See page 46 for details on the Low Battery Detection Switch.) Replace the battery. (See *9-7 Battery Replacement* for details.)

9-2-4 Other Errors

Message	FAL No.	Meaning and appropriate response
CompoBus/S communications error (no message)	None	If the POWER and ERC indicators are lit and the SD and RD indicators are not lit, an error may have occurred in the CompoBus/S communications. Restart after checking slaves and communications paths.
RS-232 port/peripheral port communications error (no message)	None	The POWER indicator will be lit and the COMM indicator will not be lit if this error occurs. AR 0804 ON: An error has occurred in communications between the RS-232C port and peripheral device. AR 0812 ON: An error has occurred in communications between the peripheral port and peripheral device. Restart after checking communications path.

9-2-5 Fatal Errors

PC operation and program execution will stop and all outputs from the PC will be turned OFF when any of these errors have occurred. CPM2C-S operation can't be restarted until the PC is turned OFF and then ON again or a Programming Device is used to switch the PC to PROGRAM mode and clear the fatal error.

All CPU Unit indicators will be OFF for the power interruption error. For all other fatal operating errors, the POWER and ERR/ALM indicators will be lit. The RUN indicator will be OFF.

Message	FALS No.	Meaning and appropriate response
Power interruption (no message)	None	Power has been interrupted for more than 10 ms (2 ms for DC power types.) Check power supply voltage and power lines. Try to power-up again.
MEMORY ERR	F1	AR 1308 ON: There is a non-existent bit or word address in the user program. Check the program and correct errors.
		AR 1309 ON: An error has occurred in flash memory. Replace the CPU Unit.
		AR 1310 ON: A checksum error has occurred in read-only DM (DM 6144 to DM 6599). Check and correct the settings in the read-only DM area.
		AR 1311 ON: A checksum error has occurred in the PC Setup. Initialize the PC Setup and input the settings again.
		AR 1312 ON: A checksum error has occurred in the program. Check the program and correct any errors detected.
		AR 1313 ON: A checksum error has occurred in the expansion instructions data and all function codes have been set the their default values. Reset the expansion instructions.
		AR 1314 ON: Data was not maintained in an area specified for holding. Clear the error, check the data in the areas specified for holding, and try again.
		AR 1315 ON: A CompoBus/S Master ASIC error occurred. Replace the CPM2C-S.
NO END INST	F0	END(01) is not written in the program. Write END(01) at the end of the program.
I/O BUS ERR	C0	An error has occurred during data transfer between the CPU Unit and an Expansion I/O Unit or Expansion Unit. Check the Unit's connecting cable.
I/O UNIT OVER	E1	Too many Expansion Units or Expansion I/O Units (more than 5) have been connected. Check the Unit configuration. Do not connect more than 3 Expansion Units or Expansion I/O Units.
SYS FAIL FALS** (** is 01 to 99 or 9F.)	01 to 99	A FALS(07) instruction has been executed in the program. Check the FALS number to determine the conditions that caused execution, correct the cause, and clear the error.
	9F	The cycle time has exceeded the Maximum (Watch) Cycle Time setting (DM 6618). Check the cycle time and adjust the Maximum Cycle Time setting if necessary.

9-3 Programming Console Operation Errors

The following error messages may appear when performing operations on the Programming Console. Correct the error as indicated and continue operation.

Message	Meaning and appropriate response
REPL ROM	An attempt was made to write to write-protected memory. Set bits 00 to 03 of DM 6602 to "0."
PROG OVER	The instruction at the last address in memory is not NOP(00). Erase all unnecessary instructions after END(01).
ADDR OVER	An address was set that is larger than the highest memory address in Program Memory. Input a smaller address.
SETDATA ERR	FALS 00 has been input, and "00" cannot be input. Reinput the data.
I/O NO. ERR	A data area address has been designated that exceeds the limit of the data area, e.g., an address is too large. Confirm the requirements for the instruction and re-enter the address.

Note Refer to the relevant Support Software Operation Manual for details on errors that may appear when operating the SSS or SYSMAC-CPT Support Software.

9-4 Programming Errors

These errors in program syntax will be detected when the program is checked using the Program Check operation.

Three levels of program checking are available. The desired level must be designated to indicate the type of errors that are to be detected. The following table provides the error types, displays, and explanations of all syntax errors. Check level 0 checks for type A, B, and C errors; check level 1, for type A and B errors; and check level 2, for type A errors only.

Type	Message	Meaning and appropriate response
A	????	The program has been damaged, creating a non-existent function code. Re-enter the program.
	CIRCUIT ERR	The number of LD instructions (LD or LD NOT) does not match the number of logic block instructions (OR LD or AND LD).Check your program.
	OPERAND ERR	A constant entered for the instruction is not within defined values. Change the constant so that it lies within the proper range.
	NO END INSTR	There is no END(01) in the program. Write END(01) at the end of the program.
	LOCN ERR	An instruction is in the wrong place in the program. Check instruction requirements and correct the program.
	JME UNDEFD	A JME(05) instruction is missing for a JMP(04) instruction. Correct the jump number or insert the proper JME(05) instruction.
	DUPL	The same jump number or subroutine number has been used twice. Correct the program so that the same number is only used once for each.
	SBN UNDEFD	An SBN(92) has not been programmed with the same subroutine number as an SBS(91) instruction in the program. Correct the program.
	STEP ERR	STEP(08) with a section number and STEP(08) without a section number have been used incorrectly. Check STEP(08) programming requirements and correct the program.
B	IL-ILC ERR	IL(02) and ILC(03) are not used in pairs. Correct the program so that each IL(02) has a unique ILC(03). Although this error message will appear if more than one IL(02) is used with the same ILC(03), the program will executed as written. Make sure your program is written as desired before proceeding.
	JMP-JME ERR	JMP(04) and JME(05) are not used in pairs. Make sure your program is written as desired before proceeding.
	SBN-RET ERR	RET(93) has not been used properly or the relationship between SBN(92) and RET(93) is not correct. Correct the program.
C	COIL DUPL	The same bit is being controlled (i.e., turned ON and/or OFF) by more than one instruction (e.g., OUT, OUT NOT, DIFU(13), DIFD(14), KEEP(11), SFT(10)). Although this is allowed for certain instructions, check instruction requirements to confirm that the program is correct or rewrite the program so that each bit is controlled by only one instruction.
	JMP UNDEFD	JME(05) has been used with no JMP(04) with the same jump number. Add a JMP(04) with the same number or delete the JME(05) that is not being used.
	SBS UNDEFD	A subroutine exists that is not called by SBS(91). Program a subroutine call in the proper place, or delete the subroutine if it is not required.

9-5 Troubleshooting Flowcharts

Use the following flowcharts to troubleshoot errors that occur during operation.

Main Check

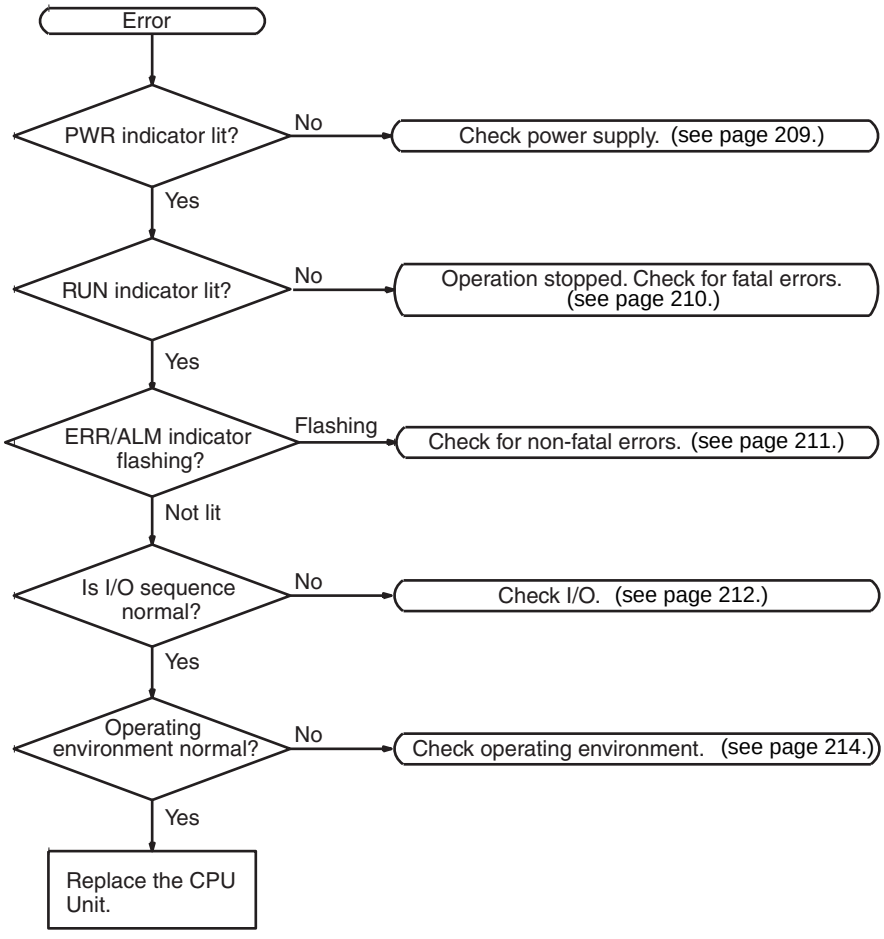

Power Supply Check

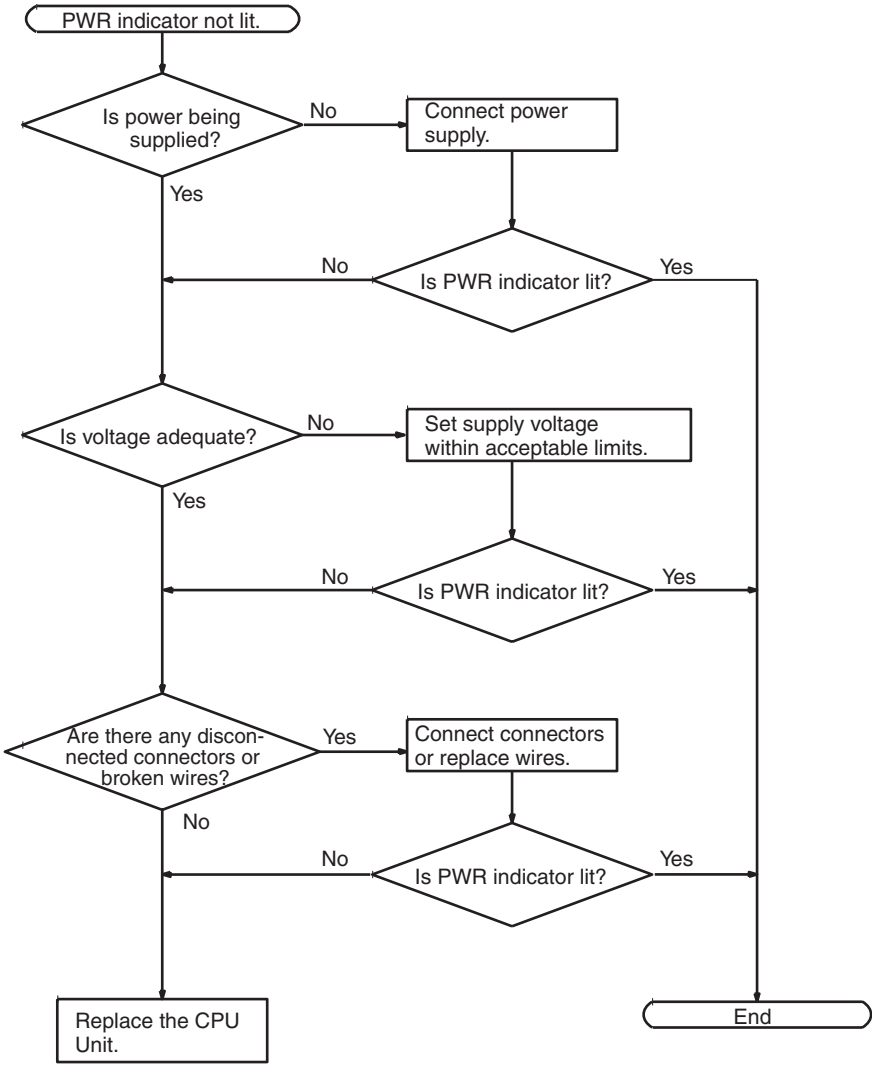

Fatal Error Check

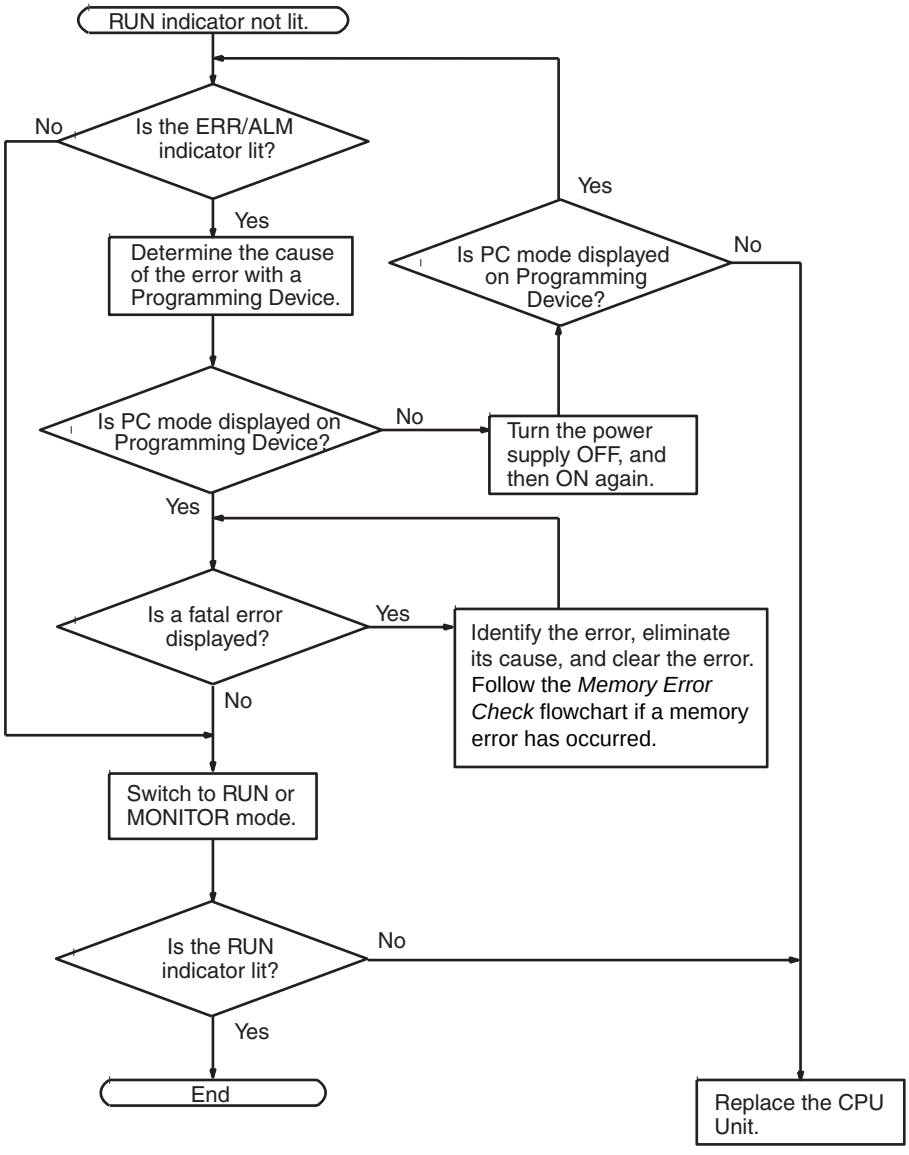

Non-fatal Error Check

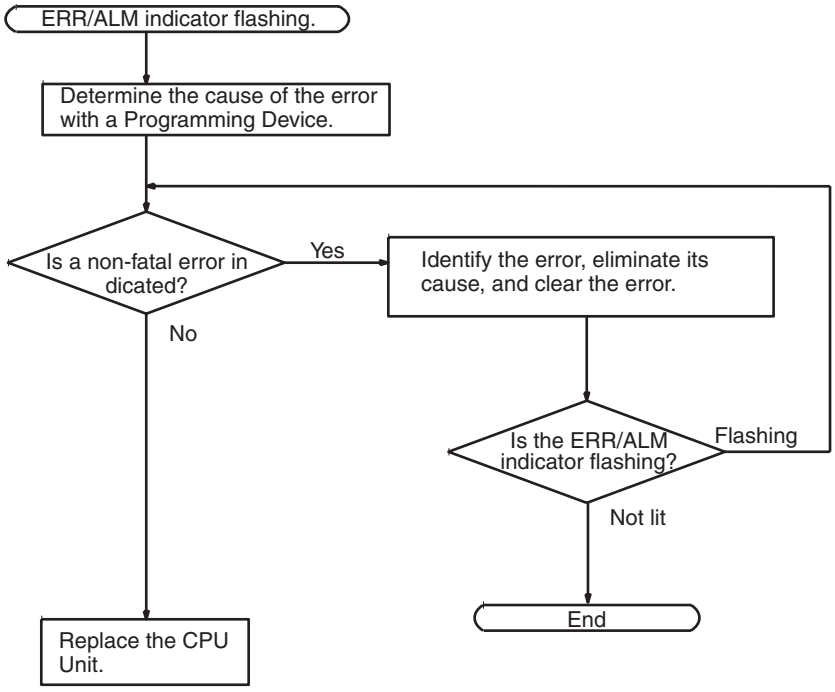

I/O Check

The I/O check flowchart is based on the following ladder diagram section.

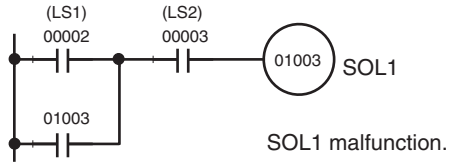

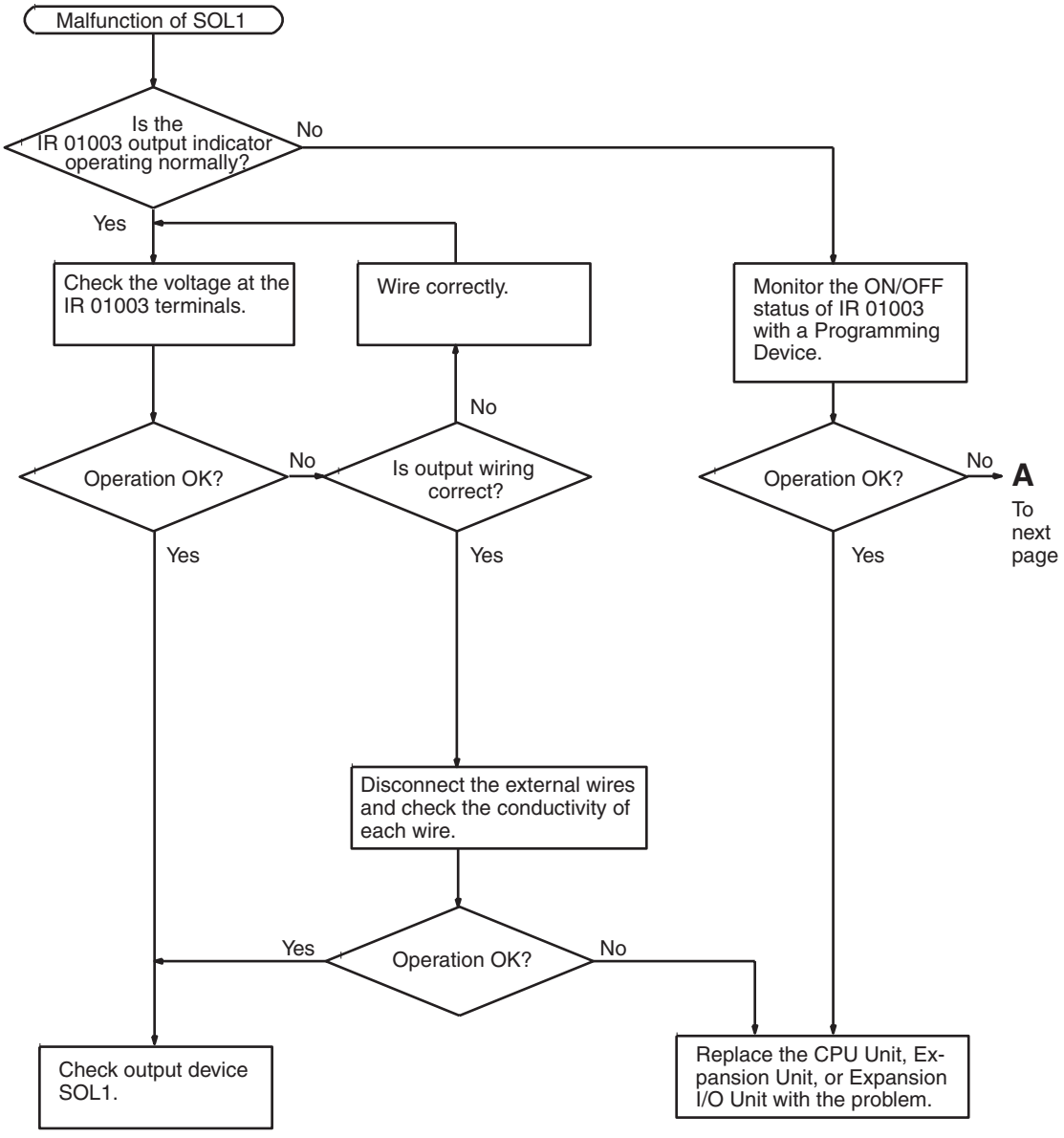

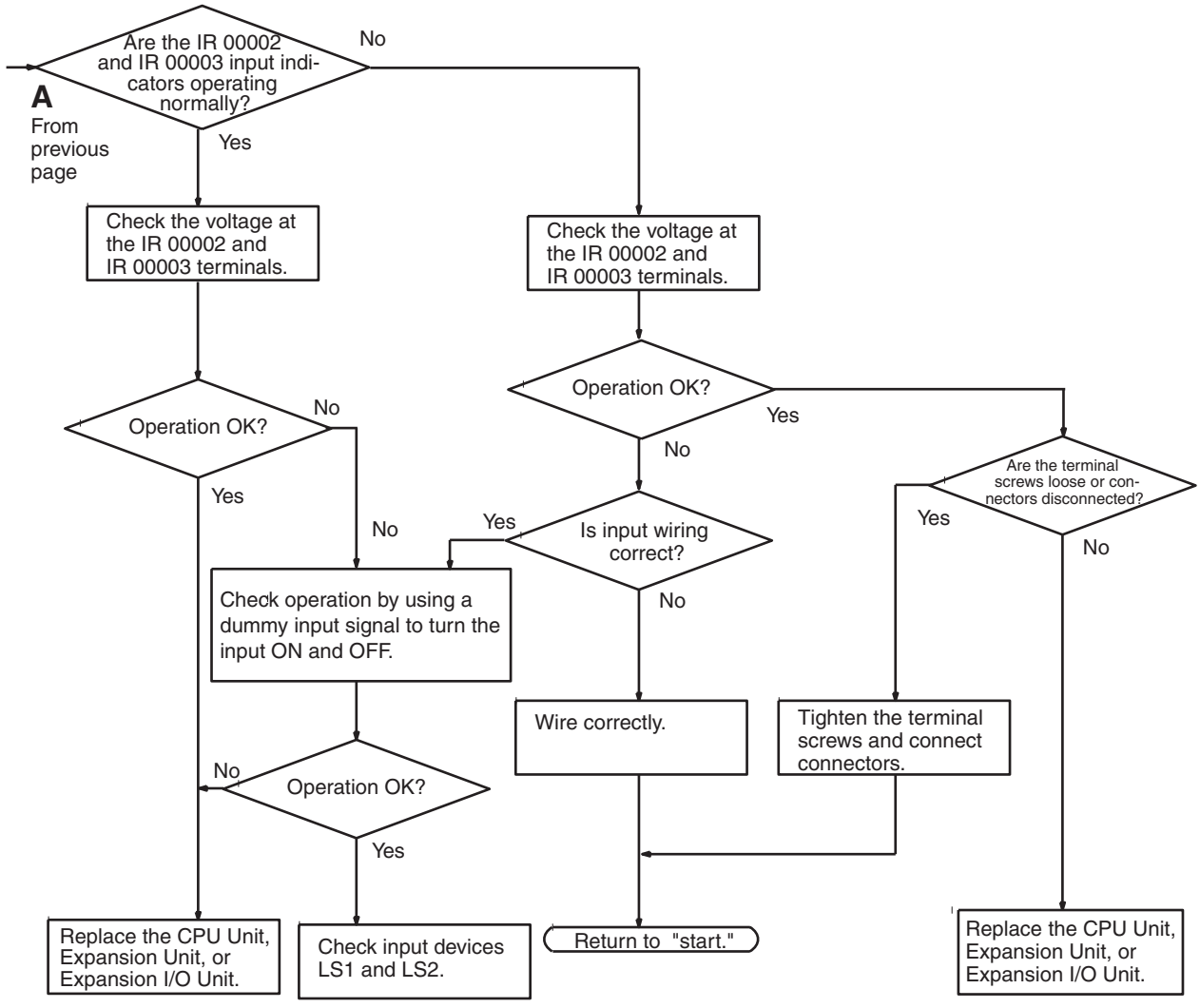
Are the IR 00002 and IR 00003 input indicators operating normally?
No
A
From previous page
Yes
Check the voltage at the IR 00002 and IR 00003 terminals.
Check the voltage at the IR 00002 and IR 00003 terminals.
Operation OK?
No
Yes
Operation OK?
Yes
No
Are the terminal screws loose or connectors disconnected?
Yes
No
Yes
Is input wiring correct?
No
No
Check operation by using a dummy input signal to turn the input ON and OFF.
Wire correctly.
Tighten the terminal screws and connect connectors.
No
Operation OK?
Yes
Replace the CPU Unit, Expansion Unit, or Expansion I/O Unit.
Check input devices LS1 and LS2.
Return to "start."
Replace the CPU Unit, Expansion Unit, or Expansion I/O Unit.

Environmental Conditions Check

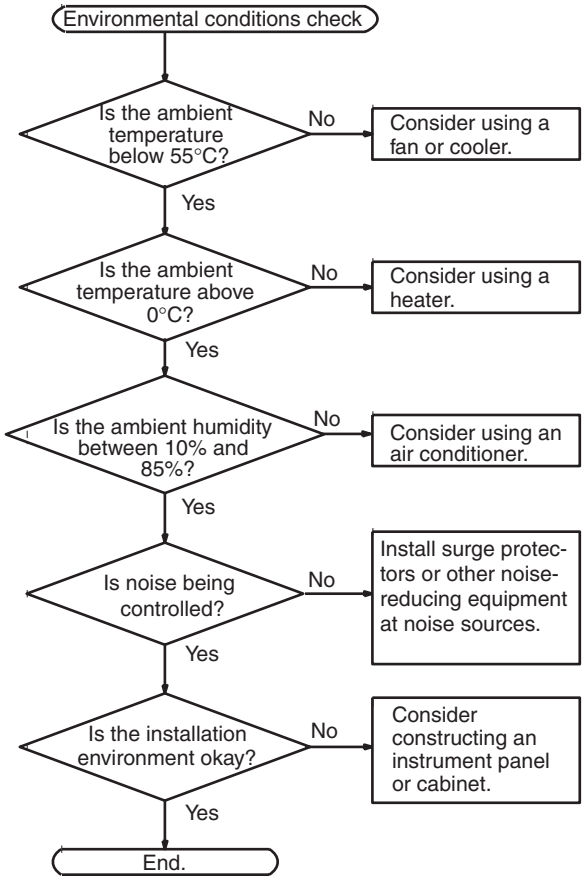

Memory Error Check

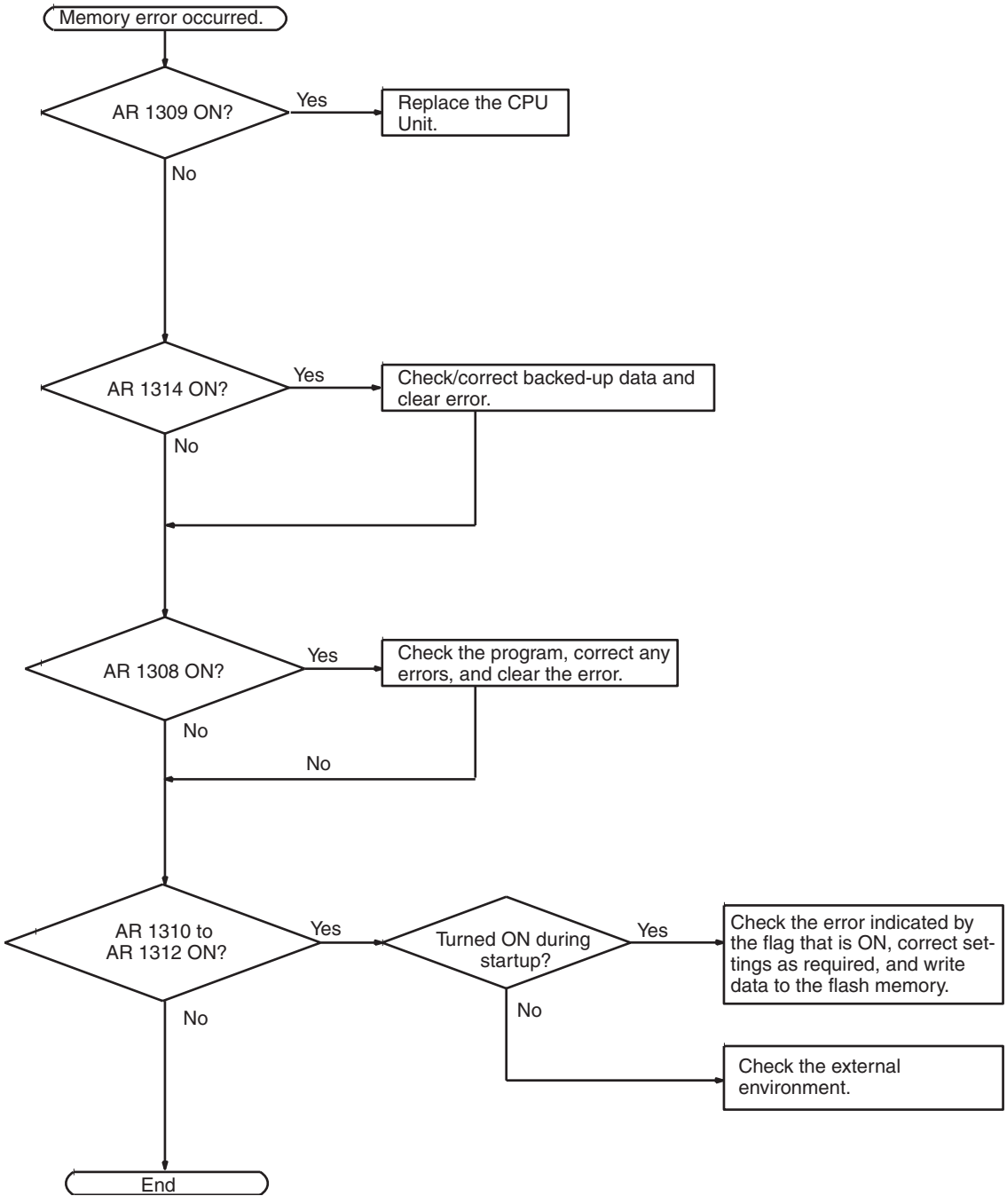

9-6 Maintenance Inspections

In order for your SYSMAC system to operate in optimum condition, be sure to carry out daily or periodical inspections.

Inspection Items

The main system components of a SYSMAC system are semiconductors, and it contains few components with limited lifetimes. Poor environmental conditions, however, can lead to deterioration of the electrical components, making regular maintenance necessary.

The standard period for maintenance checks is 6 months to 1 year, but more frequent checks are required if the PC is operated in more demanding conditions.

If the criteria are not met, adjust to within the specified ranges.

Inspection items	Details	Criteria	Remarks
Power supply	Determine whether the voltage fluctuation at the power supply terminals is within specifications.	Within the voltage variation range (see note)	Tester
Environmental conditions	Is the ambient temperature inside the panel appropriate?	0 to 55°C	Thermometer
	Is the ambient humidity inside the panel appropriate?	10% to 90% RH with no condensation	Hygrometer
	Has dirt or dust collected?	None	Visual inspection
I/O power supply	Is the voltage fluctuation measured at the I/O terminals within the standard range?	Each I/O terminal must conform to the specifications	Tester
Installation status	Are all units securely installed?	Nothing is loose	Phillips screwdriver
	Are all connection cables and connectors inserted completely and locked?	Nothing is loose	Visual inspection
	Are any of the external wiring screws loose?	Nothing is loose	Phillips screwdriver
	Are any of the external wiring cables frayed?	No external abnormalities	Visual inspection
Product service life	Contact output relay	Electrical: Resistance load: 150,000 operations Inductive load: 100,000 operations Mechanical: 20,000,000 operations	---
	Battery (CPM2C-BAT01)	2 years at 25°C	---

Note Power supply voltage range:

Power supply	Allowable voltage fluctuation range
100 to 240 VAC (CPM2C-PA201 only)	85 to 264 VAC
24 VDC	20.4 to 26.4 VDC

Required Tools

Standard Tools (Required)

- Screwdrivers (Phillips and flat-blade)
- Voltage tester or digital voltage meter
- Industrial alcohol and a cotton cloth

Measurement Devices (May be Needed)

- Synchroscope
- Cathode-ray oscilloscope
- Thermometer, hygrometer

Note Do not attempt to disassemble, repair, or modify the PC in any way.

9-7 Battery Replacement

⚠ **WARNING** The backup battery may explode, catch fire, or leak if dropped, broken apart, crushed, short-circuited, recharged, heated to 100°C or higher, or burned.

If power has not been supplied to the PC for some time, turn ON the power supply for at least 5 minutes to charge the backup capacitor before replacing the battery.

Turn OFF the power supply to the PC before replacing the battery. To protect the contents of memory, this procedure must be completed within 5 minutes.

A label has been included to remind the user when the battery needs to be replaced. After replacing the battery, write the next date that the battery should be replaced on the label and affix the label in a visible place such as the inside of the communications port cover.

Be sure to dispose of the old battery in accordance with local laws and regulations.

A CPM2C-BAT01 Backup Battery is built into CPU Units that are equipped with an internal clock. Replace the battery within two years when used under 25°C. When the battery voltage drops, the ERR/ALM indicator will flash and SR 25308 will be turned ON. (Refer to page 205.) In this case, replace the battery within seven days. Use the procedure below when replacing the battery.

1,2,3...

1. Stop CPM2C-S operation and turn OFF the power supply.
2. Remove the battery cover with a flat-blade screwdriver.

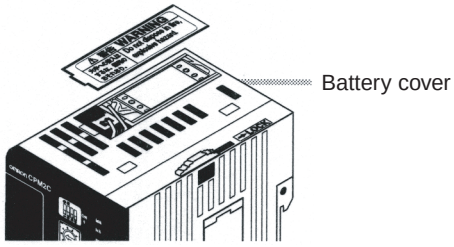

3. Remove the battery and disconnect the battery connector.

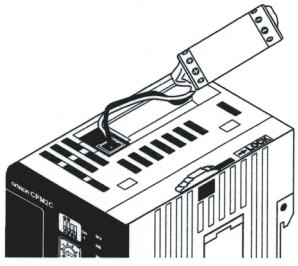

4. Install the new battery. Be sure that the connector is aligned correctly and the wires are not pinched or kinked when the battery is inserted.

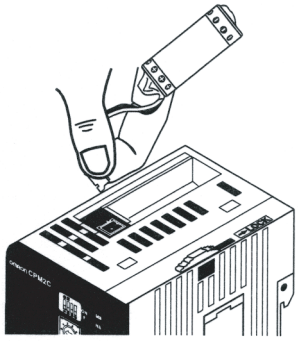

5. To enable the detection of low battery errors, slide the Low Battery Detection Switch towards the front of the Unit and set bits 12 to 15 of DM 6655 to “0.”

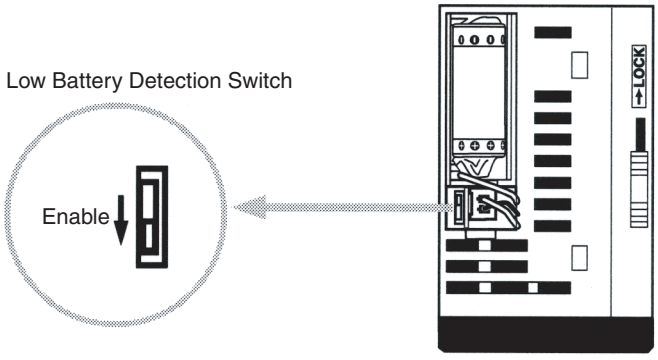

6. Replace the battery cover.
7. Write the next date that the battery should be replaced on the reminder label. The battery lifetime of the CPU Unit with clock is 2 years at 25°C and that of the CPU Unit without clock is 5 years at 25°C.

SECTION 10
Expansion Memory Unit

This section describes how to use the CPM1-EMU01-V1 Expansion Memory Unit. Follow the handling precautions and procedures to properly use the Unit.

10-1 Overview 220
10-1-1 Memory Areas 220
10-1-2 Precautions 220
10-2 Specifications and Nomenclature 221
10-2-1 Specifications 221
10-2-2 Nomenclature 221
10-3 Handling 222
10-3-1 Mounting/Removing EEPROM 222
10-3-2 PC Connections 223
10-3-3 Uploading Programs 224
10-3-4 Downloading Programs 226

10-1 Overview

The CPM1-EMU01-V1 Expansion Memory Unit is a program loader for small-size or micro PCs. Using the CPM1-EMU01-V1, simple on-site transfer of user programs and data memory between PCs is possible.

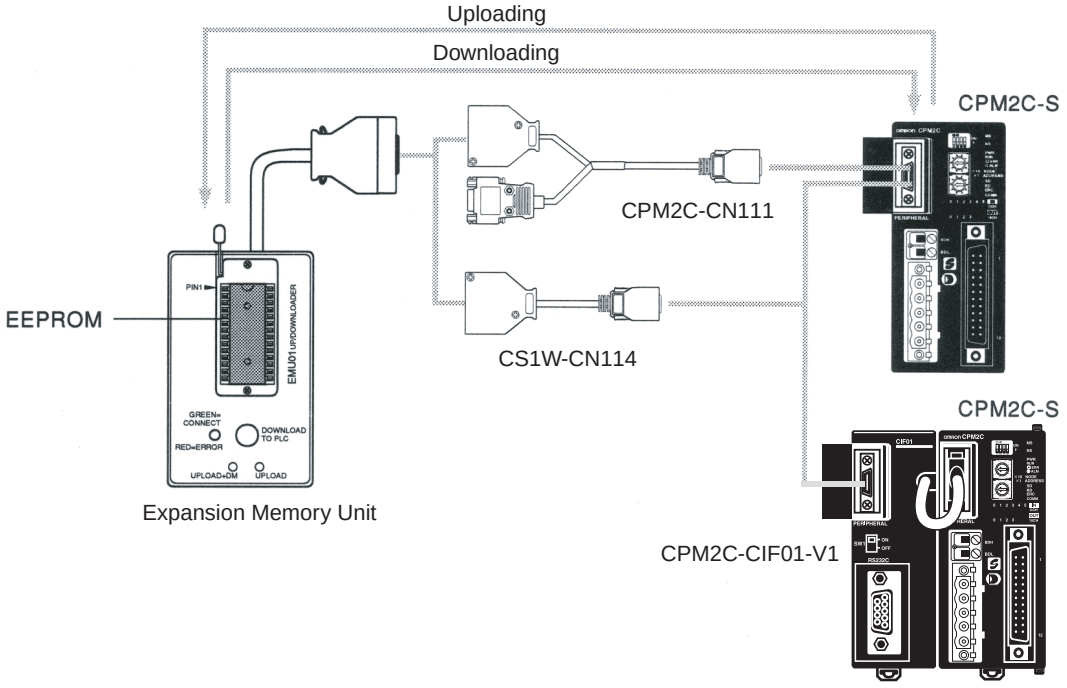

Note The “PLC” in the “DOWNLOAD TO PLC” Button indicates PCs (Programmable Controllers).

10-1-1 Memory Areas

The memory areas that are uploaded or downloaded vary with the button used as shown in the following table.

Button	UPLOAD + DM	UPLOAD	DOWNLOAD TO PLC
Ladder program and expansion instructions	Read from PC to EEPROM.	Read from PC to EEPROM.	All contents of EEPROM written to PC.
DM 6144 to 6655		Not affected.	

Note For details on program size, DM area, and the availability of expansion instructions, refer to the relevant PC manual.

10-1-2 Precautions

- Do not attempt to use the CPM1-EMU01-V1 for any applications other than those described here. Doing so may result in malfunction.
- Do not attempt to upload or download data between different types of PC. Doing so may result in malfunction.
- Do not download when the PC is in RUN or MONITOR mode. If downloading is performed when the PC is running, it will automatically switch to PROGRAM mode and operation will stop.
- Do not attempt to disassemble, repair, or modify the CPM1-EMU01-V1. Any attempt to do so may result in malfunction, fire, or electric shock.
- After downloading has been completed, be sure to confirm the user program, data, and expansion instruction information. Not doing so may result in faulty operation.

- Before touching the EEPROM or the CPM1-EMU01-V1, first touch a grounded metallic object to discharge any static build-up. Not doing so may result in malfunction or damage.

10-2 Specifications and Nomenclature

10-2-1 Specifications

Item	Specifications
Supported PCs	CPM1, CPM1A, CPM2A, CPM2C, CPM2C-S, SRM1 (-V2), CQM1, CQM1H
Read/Write memory areas	User program: 15.2 Kwords max. Data memory: DM 6144 to DM 6655 (Read-only DM and PC Setup) Expansion instructions: 18 instructions
Connector	Connector compatible with peripheral port of CPM1, CPM1A, CPM2A, SRM1 (-V2), and CQM1 PCs. For CPM2C, CPM2C-S and CQM1H PCs, connect via CS1W-CN114 or CPM2C-CN111 Connecting Cable.
Communications setting	1 start bit, 7 data bits, even parity, 2 stop bits, 9,600 bps
EEPROM (See note 1.)	256-Kbit EEPROM ATMEL: AT28C256 OMRON: EEROM-JD
Current consumption	129 mA max.
Dimensions	Main body (not including cables or connectors): 57 × 92 × 38 mm (W × H × D)
Weight	200 g max. (not including EEPROM)

Note 1. The EEPROM must be purchased separately.
2. For general specifications, refer to the relevant PC manual.

10-2-2 Nomenclature

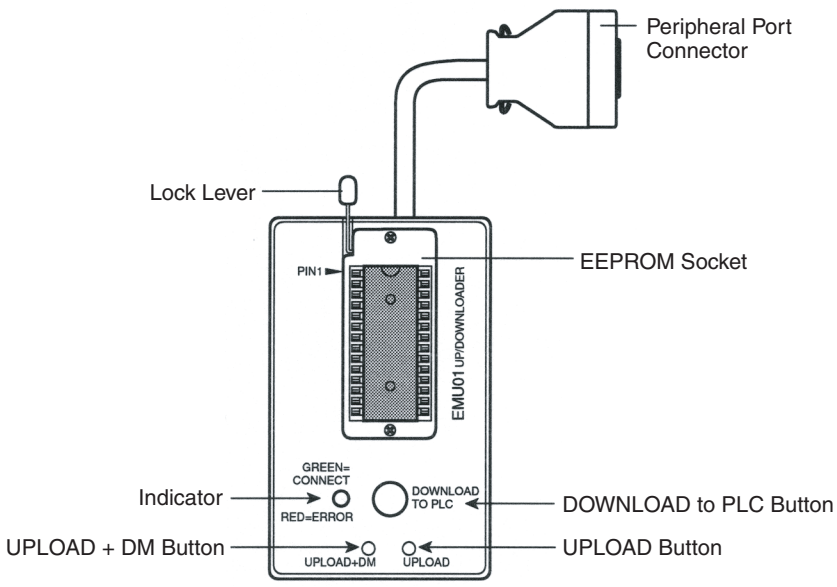

Lock Lever
For mounting and removing EEPROM.

DOWNLOAD TO PLC Button
Writes all EEPROM data (ladder programs, data memory etc.) to the PC.

UPLOAD + DM Button
Reads PC user program and contents of DM 6144 to DM 6655 to EEPROM.

UPLOAD Button
Reads only PC user program to EEPROM.

Note The “PLC” in the “DOWNLOAD TO PLC” Button indicates PCs (Programmable Controllers).

LED Indicator

CONNECT (green)	ERR (red)	Meaning
OFF	OFF	Not connected to PC (power supply OFF).
ON	OFF	Connected to a recognized PC.
Blinking	OFF	Uploading/downloading data.
ON	Blinking	Host link communications error, retry by user.
OFF	ON	PC model and EEPROM data not compatible.
OFF	Blinking	One of the following errors has occurred: • An unrecognized PC is connected. • An EEPROM error (EEPROM not present, EEPROM defect, or no program to download) occurred. • A checksum error occurred.

10-3 Handling

10-3-1 Mounting/Removing EEPROM

⚠ **Caution** Do not mount or remove the EEPROM with the CPM1-EMU01-V1 connected to the PC. Doing so may damage the EEPROM.

Mounting EEPROM

1,2,3...

1. Lift up the lock lever.
2. Straighten the pins on the EEPROM, line up with the socket and lower into the socket, as shown in the following diagram. If the EEPROM is loose, place it in the center of the socket.

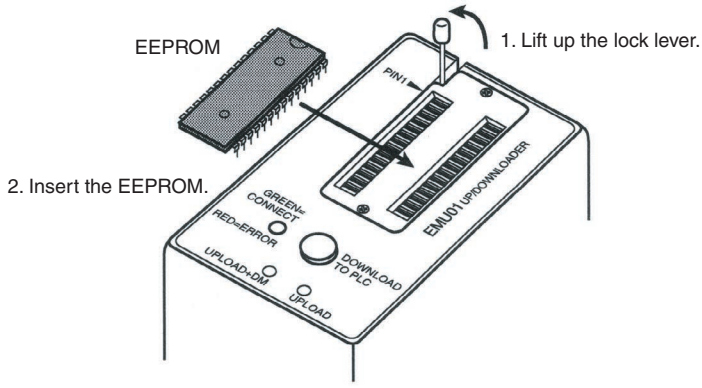

3. Gently hold down the EEPROM and pull down the lock lever.

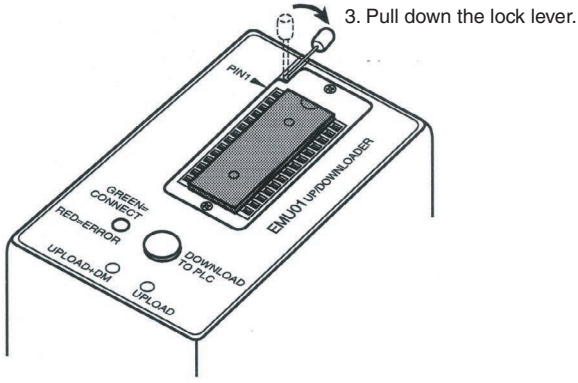

Removing EEPROM Lift up the lock lever and detach the EEPROM.

10-3-2 PC Connections

⚠ **Caution** Mount the EEPROM to the CPM1-EMU01-V1 before connecting the CPM1-EMU01-V1 to the PC.

⚠ **Caution** Do not disconnect the CPM1-EMU01-V1 from the PC when the indicator is blinking green.

CPM2C-S, CPM2C, and CQM1H PCs

When connecting to a CPM2C-S, CPM2C, or CQM1H, connect to the peripheral port via the CPM2C-CN111 or CS1W-CN114 Connecting Cable. Also, set the pins on the CPU Unit's DIP switch as follows:

CPM2C-S	Pin 3: ON (see note)
	Pin 4: ON
CPM2C	Pin 1: ON (see note)
	Pin 2: ON
CQM1H	Pin 5: ON (see note)
	Pin 7: ON

Note If pin 3 on the CPM2C-S, pin 1 on the CPM2C, or pin 5 on the CQM1H is OFF, connection is still possible if the peripheral port settings in the PC Setup (DM 6650 to DM 6654) are set to the standard communications settings.

CPM1, CPM1A, CPM2A, CQM1, and SRM1 (-V2) PCs

When connecting to the CPM1, CPM1A, CPM2A, CQM1 or SRM1 (-V2),insert the connector into the peripheral port making sure that the connector is oriented correctly.

- Insert the connector until it securely locks into place.
- Connections are not possible to the RS-232C port or any other port.

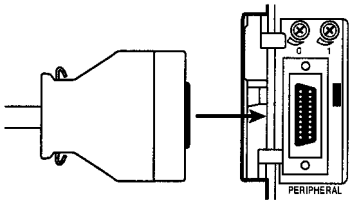

Peripheral Port Communications Settings

The peripheral port must be set to the default communications settings shown below.

Start bits:1
Data bits:7
Stop bits:2
Parity: Even
Baud rate: 9,600 bps

Disconnecting

Press the levers on the top and bottom of the connector inwards to unlock the connector and pull out as shown in the following diagram.

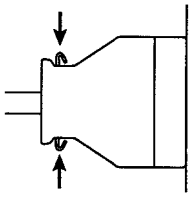

Note Do not attempt to remove the connector by pulling the cable.

10-3-3 Uploading Programs

Ladder programs and the contents of data memory can be uploaded to the EEPROM using the following procedure. The buttons used will determine whether the contents of data memory are uploaded or not.

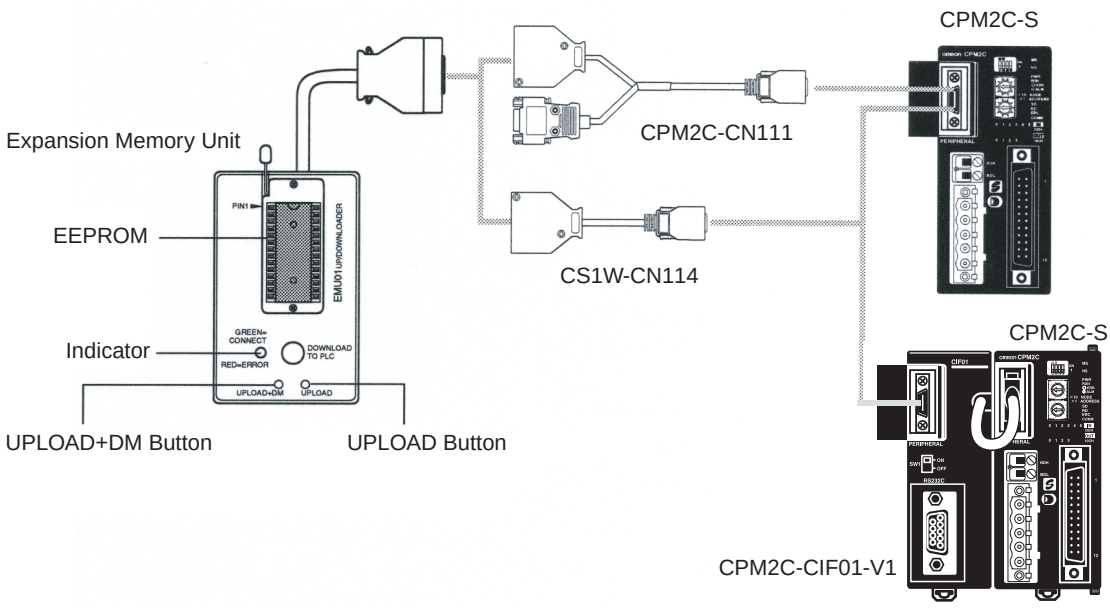

Button	UPLOAD + DM	UPLOAD
Ladder program and expansion instructions	Read from PC to EEPROM.	Read from PC to EEPROM.
DM6144 to 6655		Not affected.

Note Use a Phillips screwdriver or other tool with a diameter of 3.0 mm max. and a blade length of 10 mm min. to press the upload button.

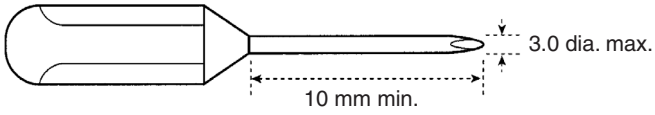

Uploading is possible even if the PC is in RUN or MONITOR mode.

Operation Procedure

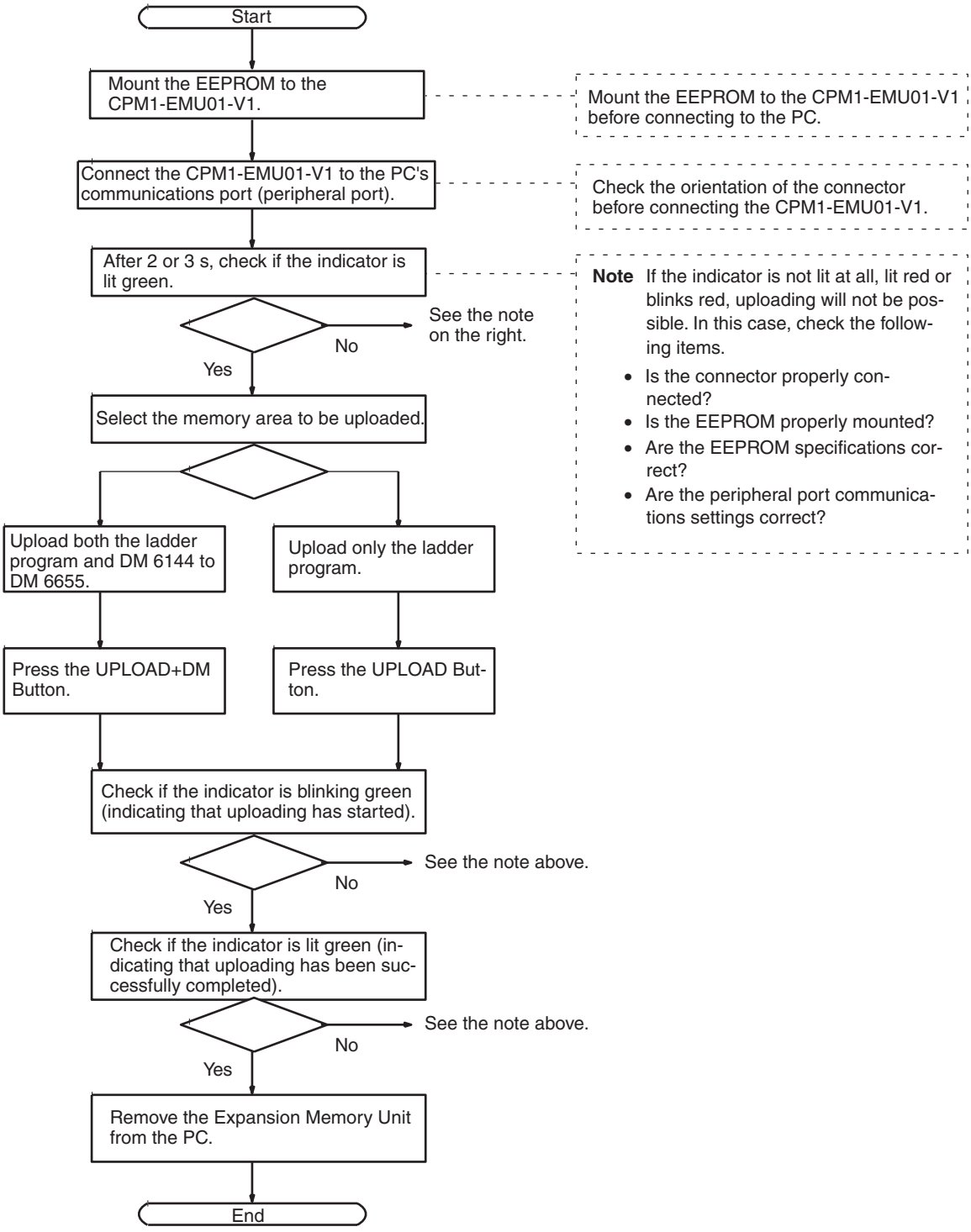

10-3-4 Downloading Programs

Ladder programs and the contents of data memory can be downloaded from the EEPROM to the PC using the procedure given below. When downloading, note the following points.

⚠ **Caution** If the PC is in RUN or MONITOR mode when downloading is started, it will automatically switch to PROGRAM mode and operation will stop. Confirm that no adverse effects will occur to the system before downloading. Not doing so may result in unexpected operation.

Note

1. If the PC is in RUN or MONITOR mode, switch the PC mode to PROGRAM mode.
2. Confirm that the program or other data to be downloaded to the PC is compatible with the PC before downloading.
3. For the CQM1 or CQM1H, when downloading programs that use user-assigned function codes for expansion instructions, be sure that pin 4 on the CPU Unit's DIP switch is ON. If these programs are downloaded while the pin is OFF, the assignments for the expansion instructions will return to their default settings.
4. After downloading has been completed, be sure to confirm the user program, data, and expansion instructions.
5. When the DOWNLOAD TO PLC Button is pressed, all EEPROM data (ladder programs, data memory etc.) is written to the PC.

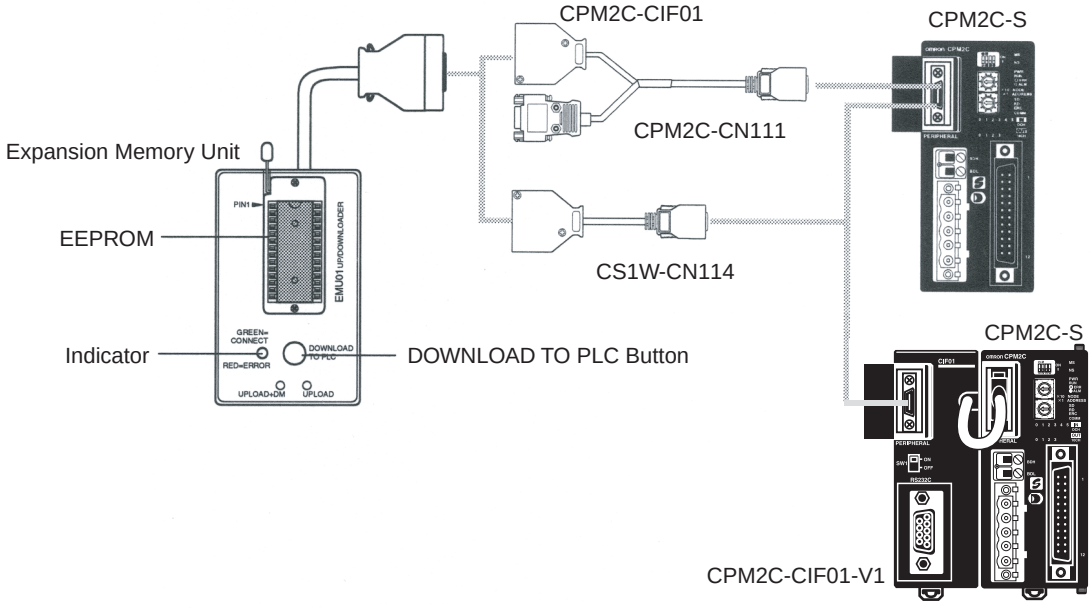

Operation Procedure

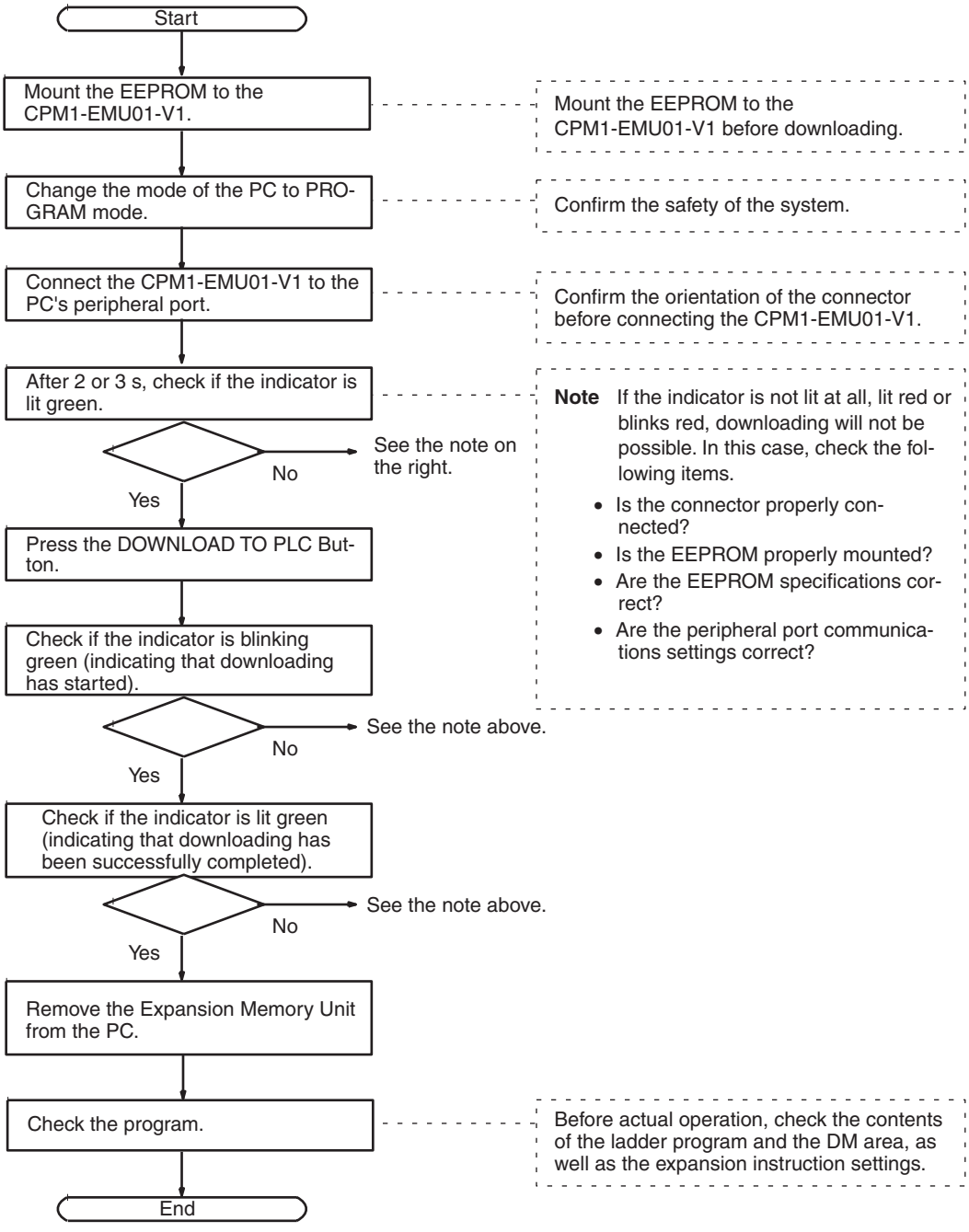

Appendix A

Standard Models

CPM2C-S CPU Units

Appearance	Transistor outputs		DeviceNet Slave functions	Input points	Output points
	Sinking	Sourcing			
Standard CPU Units 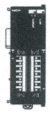	CPM2C-S100C	CPM2C-S110C	No	6 points	4 points
CPU Units with DeviceNet Slave functions	CPM2C-S100C-DRT	CPM2C-S110C-DRT	Yes		

Expansion I/O Units

Note Refer to the *CPM2C Programmable Controller Operation Manual* (W356) for descriptions of the specifications and wiring of Expansion I/O Units and Expansion Units.

Classification and Appearance	I/O capacity	Inputs	Outputs	Model
Units with Terminal Blocks	10 I/O points	6 points (24 VDC)	4 relay outputs	CPM2C-10EDR
	20 I/O points	12 points (24 VDC)	8 relay outputs	CPM2C-20EDR
	8 output points	---	8 relay outputs	CPM2C-8ER
Units with Fujitsu-compatible Connectors 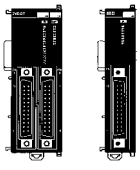	24 I/O points	16 points (24 VDC)	8 transistor outputs (sinking)	CPM2C-24EDTC
			8 transistor outputs (sourcing)	CPM2C-24EDT1C
	32 I/O points	16 points (24 VDC)	16 transistor outputs (sinking)	CPM2C-32EDTC
			16 transistor outputs (sourcing)	CPM2C-32EDT1C
	8 input points	8 points (24 VDC)	---	CPM2C-8EDC
	16 input points	16 points (24 VDC)	---	CPM2C-16EDC
	8 output points	---	8 transistor outputs (sinking)	CPM2C-8ETC
			8 transistor outputs (sourcing)	CPM2C-8ET1C
	16 output points	---	16 transistor outputs (sinking)	CPM2C-16ETC
			16 transistor outputs (sourcing)	CPM2C-16ET1C

Classification and Appearance	I/O capacity	Inputs	Outputs	Model
Units with MIL Connectors 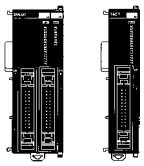	24 I/O points	16 points (24 VDC)	8 transistor outputs (sinking)	CPM2C-24EDTM
			8 transistor outputs (sourcing)	CPM2C-24EDT1M
	32 I/O points	16 points (24 VDC)	16 transistor outputs (sinking)	CPM2C-32EDTM
			16 transistor outputs (sourcing)	CPM2C-32EDT1M
	8 input points	8 points (24 VDC)	---	CPM2C-8EDM
	16 input points	16 points (24 VDC)	---	CPM2C-16EDM
	8 output points	---	8 transistor outputs (sinking)	CPM2C-8ETM
			8 transistor outputs (sourcing)	CPM2C-8ET1M
	16 outputs points	---	16 transistor outputs (sinking)	CPM2C-16ETM
			16 transistor outputs (sourcing)	CPM2C-16ET1M

I/O Connectors (OMRON Products)

Connector		Description
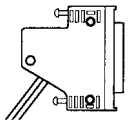	C500-CE241	24-pin soldered connector with cover
	C500-CE242	24-pin crimp connector with cover
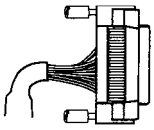	C500-CE243	24-pin pressure connector

Expansion Units

Analog I/O Unit

Model		Name	Specifications
	CPM2C-MAD11	Analog I/O Unit	2 analog inputs, 1 analog output

Temperature Sensor Units

Model		Name	Specifications
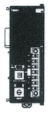	CPM2C-TS001	Temperature Sensor Unit	2 thermocouple inputs
	CPM2C-TS101		2 platinum resistance thermometer inputs

CompoBus/S I/O Link Unit

Model		Name	Specifications
	CPM2C-SRT21	CompoBus/S I/O Link Unit	Allocates I/O (8 inputs and 8 outputs) to the CPM2C-S for use as a CompoBus/S Slave.

AC Power Supply Unit

Model		Name	Specifications
	CPM2C-PA201	AC Power Supply Unit	Input: 100 to 240 VAC Output: 24 VDC/600 mA

Communications Port Connecting Cables

Connector		Description	Cable length
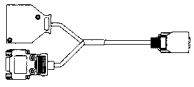	CPM2C-CN111 Connecting Cable	Converts the CPM2C-S CPU Unit's communications port to a peripheral port and RS-232C port.	0.15 m (about 4")
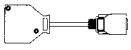	CS1W-CN114 Connecting Cable	Converts the CPM2C-S CPU Unit's communications port to a peripheral port.	0.05 m (about 2")
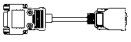	CS1W-CN118 Connecting Cable	Converts the CPM2C-S CPU Unit's communications port to an RS-232C port.	0.1 m (about 2")

Peripheral Devices

Name	Appearance	Model Number	Specifications	
Programming Console	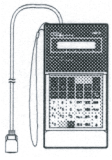	CQM1H-PRO01-E	2-m Connecting Cable attached The CQM1H-PRO01-E can be connected directly to the CPM2C-S.	
	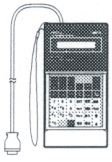	CQM1-PRO01-E	2-m Connecting Cable attached	
	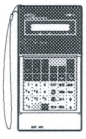	C200H-PRO27-E	Hand-held, w/backlight; requires one of the Connecting Cables listed below.	
		C200H-CN222	Connects the C200H-PRO27-E to a peripheral port.	2-m cable
		C200H-CN422		4-m cable
		CS1W-CN224	Connects the C200H-PRO27-E directly to the CPM2C-S CPU Unit's communications port.	2-m cable
		CS1W-CN624		6-m cable
CX-Programmer		WS02-CXPC1-EV3	For Windows 95, 98, Me, 2000, XP, or NT 4.0 (service pack 5 or higher) (CD-ROM)	

Maintenance Accessories

Name	Appearance	Model Number	Specifications
Backup Battery	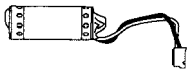	CPM2C-BAT01	---
Expansion Memory Unit	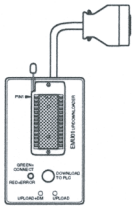	CPM1-EMU01-V1	Uploads the ladder program and DM 6144 to DM 6655 from the PC to the EEPROM and downloads the ladder program and DM 6144 to DM 6655 from the EEPROM to the PC.
EEPROM	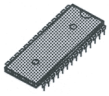	EEROM-JD	256 Kbits

Adapters and Connecting Cables

CPM2C-S communications port usage	Name	Appearance	Model number	Comments	Cable length
Peripheral	RS-232C Adapter		CQM1-CIF02	For a 9-pin computer serial port	3.3 m
	Peripheral/ RS-232C Adapter Unit	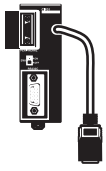	CPM2C-CIF01-V1	Use for peripheral port to RS-232C conversion.	---
RS-232C	RS-232C Cable		XW2Z-200S	For a 25-pin computer serial port	2 m
			XW2Z-500S		5 m
			XW2Z-200S-V	For a 9-pin computer serial port	2 m
			XW2Z-500S-V		5 m
RS-232C Cables (For use with the NT-AL001.)			XW2Z-070T-1	Use for CPM2C-S RS-232C port to NT-AL001 connection. (70-cm cable)	
			XW2Z-070T-1	Use for CPM2C-S RS-232C port to NT-AL001 connection. (2-m cable)	

Adapters (1:N Connections)

Name	Appearance	Model number	Specifications
RS-422 Adapter	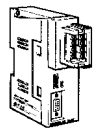	NT-AL001	Use for CPM2C-S RS-232C port to RS-422A conversion. Requires a 5-VDC, 150 mA power supply which is supplied through the CPM2C-S connection. (Can also be connected to a personal computer, but this connection requires an external 5-VDC power supply.)
Link Adapter	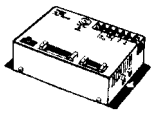	B500-AL004	Use for personal computer RS-232C port to RS-422A conversion. (Can also be connected to a CPM2C-S.)
RS-422/RS-232C Adapter Unit		CPM2C-CIF11	Use for CPM2C-S peripheral port to RS-422 conversion.

Appendix B
Dimensions

All dimensions are in millimeters.

CPU Units

All CPM2C-S CPU Units weigh 160 g max.

CPM2C-S100C
CPM2C-S110C

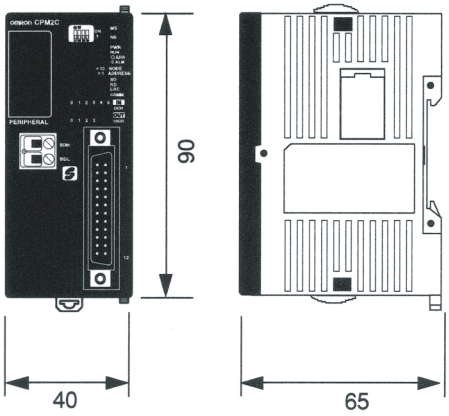

CPM2C-S100C-DRT
CPM2C-S110C-DRT

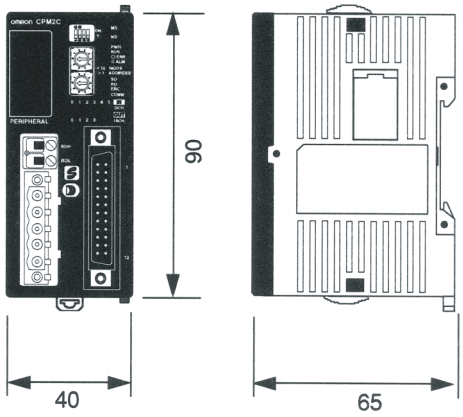

CPU Units with Connectors Attached

CPU Unit with Crimp Connectors

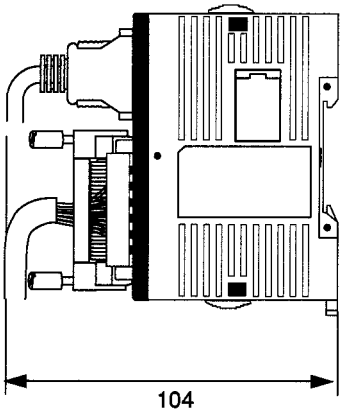

CPU Unit with Soldered Connectors

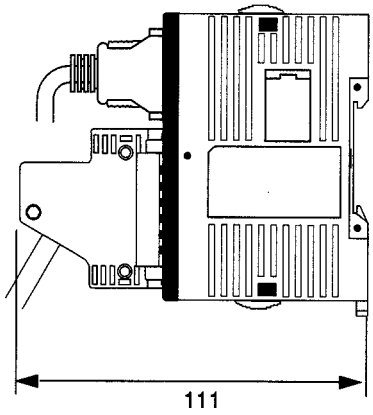

Expansion I/O Units

Note Refer to the *CPM2C Programmable Controller Operation Manual* (W356) for the specifications and dimensions of Expansion I/O Units and Expansion Units.

Appendix C
Support Software

CX-Programmer

CX-Programmer version 2.1 or later is compatible with the CPM2C-S. To use the CX-Programmer, select the CPM2-S as the CPU type.

SYSMAC-CPT Support Software

All versions of SYSMAC-CPT Support Software can be used, but the CPM2-S cannot be selected as the CPU type and the CQM1 - CPU43 must be selected instead. For this reason, there will be CQM1 memory area addresses, instructions, and function settings available offline that are not supported by the CPM2-S. Errors will occur if a program containing anything not supported by the CPM2-S is transferred from the SYSMAC-CPT Support Software.

SYSMAC Support Software

All versions of SYSMAC Support Software can be used, but the CPM2-S cannot be selected as the CPU type and the CQM1 must be selected instead. For this reason, there will be CQM1 memory area addresses, instructions, and function settings available offline that are not supported by the CPM2-S. Errors will occur if a program containing anything not supported by the CPM2-S is transferred from the SYSMAC Support Software.

Index

Numerics

1:1 connections, 82
1:1 PC Link communications
  I/O response timing, 156
1:N connections, 80

A

AC Power Supply Unit
  See also Power Supply Unit
Adapter Units
  available models, 16, 232
  components, 48
Adapters
  available models, 232
Analog I/O Unit
  available models, 230
  See also Expansion Units
Analog Terminals, 113
ASCII
  converting displays
    Programming Console, 191
atmosphere, 34

B

basic functions, 26
battery
  replacing, 217
binary data
  modifying
    Programming Console, 187
bit status
  force-set/reset
    Programming Console, 189
bits
  searching
    Programming Console, 176
buzzer operation
  Programming Console, 170

C

cabinet
  installation
    precautions, 55
  Programming Console installation, 161
cables
  available models, 231
characteristics, 34
check levels
  program checks, 207
checking
  program syntax
    Programming Console, 178
circuit configuration
  inputs, 37
  outputs
    transistor, 39
clearing
  memory areas
    Programming Console, 167
clock
  reading and setting the clock, 192
communications
  capabilities, 26
    overview, 7
Communications Errors, 203
communications mode
  CompoBus/S communications mode, 112
communications speed
  DeviceNet Communications, 118
communications status
  CompoBus/S, 115
CompoBus/S communications, 111
  communications mode, 112
  communications status, 115
  compatible Slaves, 113
  flags, 115
  I/O allocation, 114
CompoBus/S Communications Error, 203
CompoBus/S I/O Link Unit
  available models, 230
  See also Expansion Units
CompoBus/S Master functions, 111
components
  Adapter Units, 48
  CPU Units, 43
  Expansion I/O Units, 48
  Power Supply Unit, 48
conduit installation, 61
connectors
  available models, 230
counters
  changing SV
    Programming Console, 185
  example of inputting, 197
CPM2C
  function comparison, 27

CPU Units
available models, 10, 229
components, 43
cyclic operation, 21, 140
dimensions, 235
general specifications, 34
input specifications, 37
internal structure, 17
cycle monitor time
PC Setup settings, 107
cycle time
displaying
Programming Console, 191
cycle time (minimum)
PC Setup settings, 108
cyclic operation, 21, 140

D

data
modifying
Programming Console, 184–189
data link, 8, 82
decimal data with sign
See also signed decimal data
decimal data without sign
See also unsigned decimal data
DeviceNet communications, 117
examples, 128
flags, 136
LED indicators, 135
status information, 135
dielectric strength, 34
differentiated instructions
entering, 173
dimensions, 235
DIN Track installation, 58
displays
converting between hex and ASCII
Programming Console, 191
cycle time
Programming Console, 191
downloading
programs, 226
duct installation, 60

E

EC Directives
precautions, xx
EEPROM
mounting/removing, 222
specifications, 221
electrical noise
preventing, 56, 60
ERR/ALM indicator
flashing, 205
lit, 206
error log, 110
PC Setup settings, 109
errors
fatal, 206
identifying, 203
non-fatal, 205
programming, 207
Programming Console operations, 206
reading/clearing messages
Programming Console, 169
user-defined errors, 204
Expansion I/O Units
available models, 12, 229
components, 48
connections, 57
dimensions, 235
general specifications, 34
input specifications, 41
output specifications, 41
expansion instructions
reading and changing function code assignments, 170
Expansion Memory Unit, 219
connections, 223
Expansion Units
available models, 14, 230
connections, 57
specifications, 34
explicit message communications, 121

F

FAL numbers, 205
FAL(06), 204
FALS numbers, 206
FALS(07), 204
false inputs, 73
fatal errors
troubleshooting, 210
features, 2
flags
CompoBus/S, 115
DeviceNet, 136
SR area flags, 92–94
flash memory
precautions, 202

flicker output
example, 197
force-set/reset
clearing
Programming Console, 190
Programming Console, 189
function codes
reading and changing expansion instruction assignments, 170
functions, 8
comparison, 27

H–I

hexadecimal data
converting displays
Programming Console, 191
hold bit status
PC Setup settings, 106
humidity, 34
I/O capacity, 34
I/O connectors
available models, 230
pin allocation
CPU Units, 47
wiring, 64
I/O errors
troubleshooting, 212
I/O line noise
preventing, 60
I/O Modules, 113
I/O refreshing
immediate refreshing, 24
I/O response time
1:1 PC Link communications, 156
See also timing
I/O Terminals, 113
immediate refreshing, 24
indicators
flashing ERR/ALM indicator, 205
lit ERR/ALM indicator, 206
PC status indicators, 44
inductive loads, 73–74
initialization
time required, 19
input devices
connections, 70
input specifications
CPU Units, 37
Expansion I/O Units, 41
input time constants
PC Setup settings, 108
inputs
wiring, 67
configuration, 68
inrush current, 34
suppressing, 75
inspections, 216
installation, 58
site
selecting, 55
instructions
execution times, 143
inserting and deleting
Programming Console, 176
searching
Programming Console, 175
insulation resistance, 34
interlocks, 54
interrupt processing
calculating response time, 155
masking, 155
timing, 155
interrupt program execution
in cyclic operation, 23

L–M

leakage current, 73
LED indicators, 44
limit switches
preventing false inputs, 73
machine control functions
list, 25
maintenance, 216
accessories, 232
functions, 26
masking
interrupt processes, 155
Max. number of CompoBus/S Slaves, 112
memory
backup, 36
Expansion Memory Unit, 219
protection, 35
memory areas
AR area bits, 95
clearing
Programming Console, 167
flags and control bits, 92
partial clear, 167
structure, 84
uploading/downloading, 220
message communications, 121

messages
reading/clearing, 169
model numbers, 229
modes
changing the PC mode, 164
operating modes, 18
modifying
binary data
Programming Console, 187
data
Programming Console, 184
hexadecimal/BCD data
Programming Console, 186
signed decimal data
Programming Console, 188
SV
Programming Console, 185
unsigned decimal data
Programming Console, 189
MONITOR mode
description, 164
example test run, 199
monitoring
3-word monitor
Programming Console, 182–183
binary monitor
Programming Console, 182
differentiation monitor
Programming Console, 181
signed decimal monitor
Programming Console, 183
status
Programming Console, 179
unsigned decimal monitor
Programming Console, 184
motor control
capabilities, 4
MSG(46), 205

N

node number
DeviceNet communications, 118
noise
immunity, 34
preventing electrical noise, 56, 60
non-fatal errors
troubleshooting, 211
no-protocol communications, 81
NPN current output
connections, 70
NPN open collector
connections, 70
NT Link
connections, 81

O

operating conditions
troubleshooting, 214
operating modes, 18
operating mode at startup, 18
operation
preparations, 165
output short protection, 74
output specifications
Expansion I/O Units, 41
transistor output, 39
Output Terminals, 113
outputs
wiring, 67

P

panel
installation
precautions, 55
Programming Console installation, 161
password
entering on Programming Console, 165
PC mode
changing, 164
PC Setup settings, 99
PC status
indicators, 44
Peripheral Devices
available models, 231
peripheral port
servicing time, 107
Peripheral Port Error, 204
peripheral port servicing time
PC Setup settings, 107
photoelectric switches
preventing false inputs, 73
platinum resistance thermometer, 5
PNP current output
connections, 70
position control, 5
power
consumption, 34
power cables, 60
power interruption
detection, 19

power supply
interrupt time, 34
precautions, 54
troubleshooting, 209, 215
wiring, 61
Power Supply Unit
available models, 10, 231
components, 48
specifications, 42
wiring, 62
precautions
design precautions, 54
general, xv
output wiring, 74
uploading/downloading, 220
program memory
setting address and reading content
Programming Console, 171
PROGRAM mode
description, 164
program write protection
PC Setup settings, 106
Programmable Terminal
connections, 81
programming
checking the program, 198–199
checks for syntax
Programming Console, 178
errors, 207
example, 193
inserting and deleting instructions
Programming Console, 176–178
preparation for, 193
procedures, 195
searching
Programming Console, 175–178
setting and reading a memory address
Programming Console, 171
Programming Console
connections, 78, 160
keys, 161
models, 161
operation errors, 206
operations, 166
using, 160
Programming Devices
connections, 78
programs
checking
check levels, 207
downloading, 226
entering and editing
Programming Console, 172
execution
in cyclic operation, 22
program capacity, 34
uploading, 224
proximity switches
preventing false inputs, 73
PT connections, 81
pulse control, 4
pulse outputs, 5
wiring, 74

Q–R

quick-response inputs, 5
relay outputs
connections, 70
Relay Terminals, 113
remote I/O communications
through CompoBus/S, 113
through DeviceNet, 118
RS-232C port
servicing time, 107
RS-232C Port Error, 204
RS-232C port servicing time
PC Setup settings, 107
RUN mode
description, 164

S

search
instruction
Programming Console, 175–176
operands
Programming Console, 176
self-diagnosis functions, 36
self-diagnostic functions, 203
self-holding bit
example, 195
Sensor Amplifier Terminals, 113
Sensor Terminals, 113
serial communications, 81
settings
basic operations
hold bit status, 106
startup mode, 105
I/O operations, 105
port servicing scan time, 107–108
shock resistance, 34

signed decimal data
modifying
Programming Console, 188
monitoring, 183
Slaves
CompoBus/S compatible, 113
specifications
characteristics, 34
Expansion Memory Unit, 221
general specifications, 34
I/O connectors, 64
input specifications
CPU Units, 37
Expansion I/O Units, 41
output specifications
Expansion I/O Units, 41
transistor output, 39
Power Supply Unit, 42
SR area, 92–94
startup mode
PC Setup settings, 105
status
monitoring
Programming Console, 179
SV
modifying
Programming Console, 185
syntax
checking the program
Programming Console, 178
system
checks, 202
configuration, 10

T

temperature
operating, storage, 34
Temperature Sensor Units
available models, 230
See also Expansion Units
terminal blocks
connections, 67
test run
example, 199
procedure, 202
thermocouple, 5
timers
changing SV
Programming Console, 185
example of inputting, 196
timing
basic instructions, 143
I/O response time, 153
instruction execution
See also instruction
interrupt processing, 155
special instructions, 144, 151
troubleshooting, 208
fatal errors, 210
I/O errors, 212
non-fatal errors, 211
operating conditions, 214
power supply, 209, 215

U–W

unsigned decimal data
modifying
Programming Console, 189
monitoring, 184
uploading
programs, 224
vibration resistance, 34
voltage
output
connections, 70
supply voltage, 34
wiring, 60
I/O connectors, 64
power supply, 61
write protecting the program
PC Setup settings, 106

Revision History

A manual revision code appears as a suffix to the catalog number on the front cover of the manual.

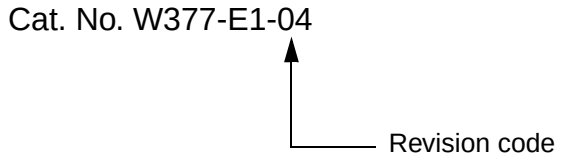

The following table outlines the changes made to the manual during each revision. Page numbers refer to the previous version.

Revision code	Date	Revised content
1	November 2000	Original production
02	December 2002	**Page xvi:** Information added on 3-tier communications with CX-Programmer. **Pages 6, 15, 46, 47, 75, 76, 78, 79, 166, 222, 226, 228, and 234:** Version 1 of CPM2C-CIF01 added (CPM2C-CIF01-V1). **Page 11:** Tables of communications distances replaced. **Page 15:** Illustration changed. **Page 32:** Models added to table and maximum I/O capacity changed. **Page 67:** Addresses corrected in illustration. **Page 74:** Wire colors changed. **Page 101:** Addresses corrected in description of peripheral port communications settings. **Page 130:** Information added. **Pages 156 to 165:** Information deleted or moved to an appendix.
03	October 2003	**Page xiii:** Caution added. **Page 4:** *Share Programming Devices* rewritten. **Pages 15, 131, and 132:** Catalog numbers added and manual names corrected. **Page 32:** Reference to manual deleted. **Pages 113, 133, 134, and 159:** Catalog number added. **Pages 128 and 129:** “CS1” changed to “CS/CJ” or to “CS.” **Pages 128 and 129:** Manual name corrected (two locations). **Page 166:** Two operations added to table. **Page 168:** Two sections added for new operations. **Page 229:** Operating systems added for CX-Programmer and SYSMAC-CPT and SYSMAC Support Software rows removed from table. **Pages 235 to 239:** Completely replaced with new material.
04	September 2009	**Page xi:** Added safety-related information. **Page xvii:** Changed EMC standard numbers for EMI and Common Emission Standard. **Page 12:** Changed Unit configuration. **Page 34:** Changed maximum I/O capacity specification. **Pages 46 and 60:** Added a note. **Page 75:** Changed table and the text above it. **Page 76:** Added “2-core” in two locations. **Page 137:** Changed portion of table for bits 12 and 13.

OMRON Corporation
Industrial Automation Company
Control Devices Division H.Q.
Automation & Drive Division
Network Department
Shiokoji Horikawa, Shimogyo-ku,
Kyoto, 600-8530 Japan
Tel: (81) 75-344-7116/Fax: (81) 75-344-7149

Regional Headquarters
OMRON EUROPE B.V.
Wegalaan 67-69-2132 JD Hoofddorp
The Netherlands
Tel: (31)2356-81-300/Fax: (31)2356-81-388

OMRON ELECTRONICS LLC
One Commerce Drive Schaumburg,
IL 60173-5302 U.S.A.
Tel: (1) 847-843-7900/Fax: (1) 847-843-7787

OMRON ASIA PACIFIC PTE. LTD.
No. 438A Alexandra Road # 05-05/08 (Lobby 2),
Alexandra Technopark, Singapore 119967
Tel: (65) 6835-3011/Fax: (65) 6835-2711

OMRON (CHINA) CO., LTD.
Room 2211, Bank of China Tower,
200 Yin Cheng Zhong Road,
PuDong New Area, Shanghai, 200120, China
Tel: (86) 21-5037-2222/Fax: (86) 21-5037-2200

Authorized Distributor:

© OMRON Corporation 2000 All Rights Reserved.
In the interest of product improvement,
specifications are subject to change without notice.

Printed in Japan
0909

OMRON Industrial Automation Global: **www.ia.omron.com**

Cat. No. W377-E1-04