Cat. No. W376-E1-08

SYSMAC
CS1W-NC113/213/413/133/233/433
Position Control Units

OPERATION MANUAL

OMRON

CS1W-NC113/213/413/133/233/433 Position Control Units

Operation Manual

Revised February 2022

Notice:

OMRON products are manufactured for use according to proper procedures by a qualified operator and only for the purposes described in this manual.

The following conventions are used to indicate and classify precautions in this manual. Always heed the information provided with them. Failure to heed precautions can result in injury to people or damage to property.

⚠ DANGER Indicates an imminently hazardous situation which, if not avoided, will result in death or serious injury. Additionally, there may be severe property damage.

⚠ WARNING Indicates a potentially hazardous situation which, if not avoided, could result in death or serious injury. Additionally, there may be severe property damage.

⚠ Caution Indicates a potentially hazardous situation which, if not avoided, may result in minor or moderate injury, or property damage.

OMRON Product References

All OMRON products are capitalized in this manual. The word “Unit” is also capitalized when it refers to an OMRON product, regardless of whether or not it appears in the proper name of the product.

The abbreviation “Ch,” which appears in some displays and on some OMRON products, often means “word” and is abbreviated “Wd” in documentation in this sense.

The abbreviation “PLC” means Programmable Controller. “PC” is used, however, in some Programming Device displays to mean Programmable Controller.

Visual Aids

The following headings appear in the left column of the manual to help you locate different types of information.

Note Indicates information of particular interest for efficient and convenient operation of the product.

1,2,3... 1. Indicates lists of one sort or another, such as procedures, checklists, etc.

© OMRON, 2000

All rights reserved. No part of this publication may be reproduced, stored in a retrieval system, or transmitted, in any form, or by any means, mechanical, electronic, photocopying, recording, or otherwise, without the prior written permission of OMRON.

No patent liability is assumed with respect to the use of the information contained herein. Moreover, because OMRON is constantly striving to improve its high-quality products, the information contained in this manual is subject to change without notice. Every precaution has been taken in the preparation of this manual. Nevertheless, OMRON assumes no responsibility for errors or omissions. Neither is any liability assumed for damages resulting from the use of the information contained in this publication.

Unit Versions of CS-series Position Control Units

Unit Versions

A “Unit version” has been introduced to manage Position Control Units in the CS Series according to differences in functionality accompanying Unit upgrades.

Notation of Unit Versions on Products

The Unit version is given to the right of the lot number on the nameplate of the applicable Position Control Units, as shown below.

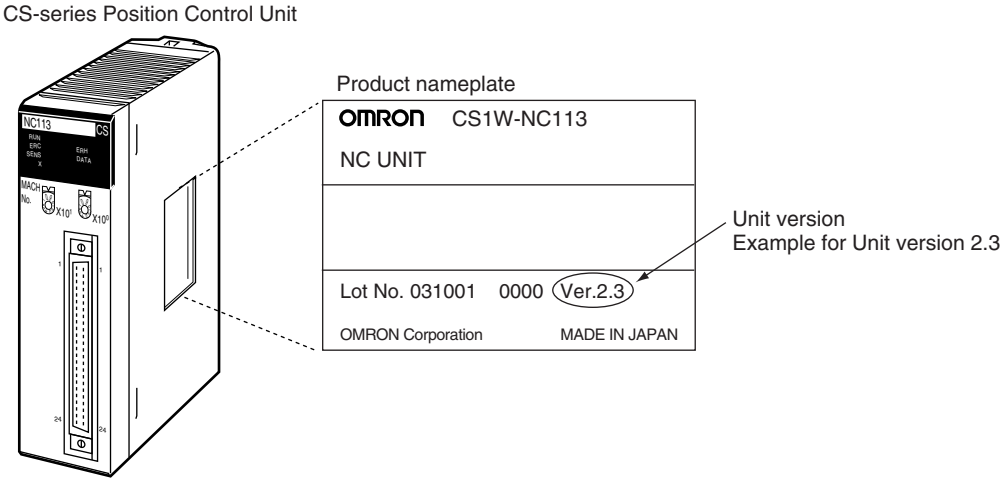

The Unit version of the Position Control Units begins at version 2.0.

Confirming Unit Versions with Support Software

The Unit version can be confirmed in *Unit Manufacturing Information* of CX-Programmer version 4.0 or higher using the following procedure.

1,2,3...

1. In the *IO Table* Window, right-click the Position Control Unit and select ***Unit Manufacturing information.***
2. The following *Unit Manufacturing information* Dialog Box will be displayed.

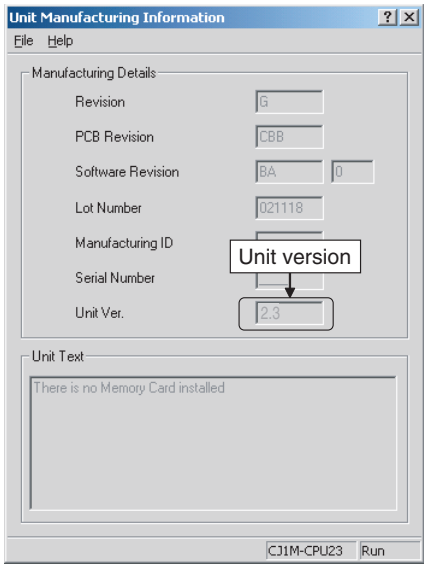

Example: Unit version 2.3 will be displayed in the *Unit Manufacturing information* Dialog Box.

Use the above display to confirm the Unit version of the Position Control Unit.

Using the Unit Version Label

The following Unit version label is provided with the Position Control Unit.

This label can be attached to the front of the Position Control Unit to differentiate between Position Control Units of different Unit versions.

Unit Version Notation

In this manual, the Unit version of a Position Control Unit is given as shown in the following table.

Product nameplate	Notation used in this manual	Special remarks
Ver. 2.0 or later number shown to the right of the lot number	CS-series Position Control Unit Ver. 2.0 or later	Information without reference to specific Unit versions applies to all versions of the Unit.
Blank to the right of lot number	Pre-Ver. 2.0 CS-series Position Control Unit	

Functions Supported by Each Unit Version of Position Control Unit

Unit Version		Pre-Ver. 2.0	Ver. 2.0	Ver. 2.1	Ver. 2.2	Ver. 2.3
Internal system software version		1.0	2.0	2.1	2.2	2.3
CS-series Position Control Units		CS1W-NC113/133/213/233/413/433				
Functions	Changing the acceleration for a multiple start during relative movement or absolute movement in direct operation	Not supported	Supported	Supported	Supported	Supported
	Changing acceleration/deceleration time during jog operation	Not supported	Supported	Supported	Supported	Supported
	Setting acceleration/deceleration time for axis parameters until the target speed is reached	Not supported	Supported	Supported	Supported	Supported
	Easy backup function	Not supported	Supported	Supported	Supported	Supported
	Setting number of unused axes	Not supported	Not supported	Supported	Supported	Supported
	Setting CW/CCW pulse output direction	Not supported	Not supported	Not supported	Supported	Supported
	Setting origin search pattern	Not supported	Not supported	Not supported	Supported	Supported
	Position data setting when origin signal stops	Not supported	Not supported	Not supported	Supported	Supported
	Setting jog operation	Not supported	Not supported	Not supported	Not supported	Supported
	Setting deviation counter reset output signal	Not supported	Not supported	Not supported	Not supported	Supported
	Checking parameters and data at startup	Not supported	Not supported	Not supported	Not supported	Supported
Support Software		CX-Position Ver. 1.0 or later	CX-Position Ver. 1.0 (See note 2.) CX-Position Ver. 2.0 or later	CX-Position Ver. 1.0 (See note 2.) CX-Position Ver. 2.0 or later	CX-Position Ver. 1.0 (See note 2.) CX-Position Ver. 2.0 (See note 2.) CX-Position Ver. 2.1 or later	CX-Position Ver. 1.0 (See note 2.) CX-Position Ver. 2.0 (See note 2.) CX-Position Ver. 2.1 (See note 2.) CX-Position Ver. 2.2 or later

Note 1. The Position Control Unit must be installed with CS1-H CPU Unit to use the above functions supported for Position Control Unit Ver. 2.0. These functions cannot be used if the Position Control Unit is installed with a CS1 CPU Unit (with -V1 suffix).

2. With CX-Position Ver. 1.0, new functions added to Position Control Units Ver. 2.0 or higher cannot be used.

Checking Position Control Unit Version and Internal System Software Version

Position Control Units have an internal system software version in addition to the Unit version used by CS/CJ-series Units to distinguish functions. The following table shows the relationship between the Position Control Unit's Unit version and internal system software version.

Version type	Unit version	Internal system software version
Details	Version code for distinguishing functions supported for CS/CJ-series Units.	Version code for internal system software.
Checking method	The Unit version code is displayed to the right of the lot number on the nameplate attached to the Position Control Unit. The Unit version code can also be checked from CX-Programmer Ver. 4.0 in *Unit Manufacturing information* of the *I/O Table* Window.	Press the **Ctrl** + **V** Keys while the CX-Position *NC Monitor* Screen is displayed.
Correlation	Pre-Ver. 2.0	1.0
	Ver. 2.0	2.0
	Ver. 2.1	2.1
	Ver. 2.2	2.2
	Ver. 2.3	2.3

Version Upgrade Information

The following tables outline changes made for the most recent version upgrade for SYSMAC CS-Series Position Control Units.

■ Enhanced Functions for Unit Version 2.0

Changing Multiple-start Acceleration for Relative and Absolute Movement during Direct Operation

Previous version	Present version (Ver. 2.0 or later)
When executing multiple starts during direct operation, the acceleration/deceleration times set for the first start were used.	When executing multiple starts during direct operation, the acceleration time set for each of the multiple starts is used and the deceleration time set for the first start is used.

Changing Accelerations/Decelerations and Changing Deceleration Following Interrupt Inputs for Interrupt Feeding during Direct Operation

Previous version	Present version (Ver. 2.0 or later)
The speed command could be changed as long as it was done before the interrupt signal was input. If an acceleration/deceleration time was changed, the change would not be effective until the next interrupt feed command. The acceleration/deceleration times set for the first start were used for speed changes. The deceleration time set for the first start was used after interrupt signal input.	The acceleration/deceleration times can be changed and changes can be made with the speed command as long as the changes are made before the interrupt signal is input. The acceleration/deceleration times can also be changed during acceleration and deceleration. The deceleration time set for when the interrupt input occurs is used following interrupt signal input.

Allowing Changes to Acceleration/Deceleration Time during Jogging

Previous version	Present version (Ver. 2.0 or later)
The only speed changes allowed during jogging were those made with the speed command. If acceleration/deceleration times changed, the changes were not effective until the next JOG command. The deceleration time set when the JOG operation was started was used for accelerations/decelerations for speed changes as well as for JOG stops or deceleration stops.	In addition to changes made during JOG operation with the speed command, speed changes can also be made during JOG operation by changing the acceleration/deceleration times. Accelerations/decelerations can also be changed during acceleration/deceleration. Accelerations/decelerations can also be changed during acceleration/deceleration to a fixed speed. The deceleration time set when the stopping the JOG operation is executed is used for JOG stops or deceleration stops.

Setting Acceleration/Deceleration Time in Axis Parameters as Time Required to Reach Target Speed

Previous version	Present version
Acceleration/deceleration times could be set only as the time required for each axis to go from the initial speed to the maximum speed.	The acceleration/deceleration time can be set in one of the following ways. • Set as the time required for each axis to go from the initial speed to the maximum speed (previous setting method). • Set as the time required for each axis to go from the present speed to the target speed. (This simplifies calculating acceleration/deceleration times.)

Addition of Easy Backup Function

Previous version	Present version
There was no easy backup function.	The easy backup function of the CPU Unit can be used to automatically back up and restore the following data from/to flash memory in the PCU along with all data from the CPU Unit using a Memory Card in the CPU Unit. It can also compare the data. This makes it easier to back up all PLC data or to prepare backup data in case Units are replaced. • Axis parameters • Sequence data • Speed data • Acceleration/deceleration time data • Dwell time data • Zone data **Note** Data for all Unit axes is stored at the same time.

■ Enhanced Functions in the Upgrade from Unit Version 2.0 to Unit Version 2.1

Setting the Number of Unused Axes

Previous version	Present version (Ver. 2.1 or later)
Emergency stop input wiring was also required for unused axes.	Setting the number of unused axes in the common parameters eliminates the need for emergency stop input wiring for unused axes.

■ Enhanced Functions in the Upgrade from Unit Version 2.1 to Unit Version 2.2

Setting the CW/CCW Pulse Output Direction

Previous version	Present version (Ver. 2.2 or later)
The pulse output direction could not be changed.	Bits for reversing the output direction have been added to the axis parameter areas. Specifying reversal reverses the output section and is effective for applications using the same wiring but reversed coordinates.

Addition of Origin Search Pattern Setting

Previous version	Present version (Ver. 2.2 or later)
Operation was uneven if a return was performed at the origin proximity and operation immediately stopped at the origin input signal.	Reverse mode 3 has been added to enable stopping at the origin signal at the proximity speed when a return is performed at the origin proximity.

Setting the Position Data When the Origin Signal Stops

Previous version	Present version (Ver. 2.2 or later)
The stopping point was always 0.	The value of the stopping point can be set. Applications in which the stopping point is not 0 do not require presetting the present position.

■ Enhanced Functions in the Upgrade from Unit Version 2.2 to Unit Version 2.3

Jog Operation Setting

Previous version	Present version (Ver. 2.3 or later)
Axes could not be controlled from the CX-Position.	The following operations are possible in combination with CX-Position version 2.2 (included with CX-One version 1.1). • Setting parameters for jog operations (acceleration/deceleration time and RUN signal allocation) • Resetting errors • Turning the RUN signal ON/OFF • Jogging forward and backward (+jog/–jog) • Monitoring the present position, limit sensor, and other functions while jog operations are being performed

Deviation Counter Reset Output Signal Setting

Previous version	Present version (Ver. 2.3 or later)
The deviation counter reset output could not be turned ON and OFF from the CX-Position.	The following operations are possible in combination with CX-Position version 2.2 (included with CX-One version 1.1). • Turning ON and OFF the deviation counter reset output

Checking Parameters and Data at Startup

Previous version	Present version (Ver. 2.3 or later)
Parameters and data were not checked at startup.	Parameters and data for up to four axes can be checked and up to four errors (i.e., one per axis) can be detected and output.

TABLE OF CONTENTS

PRECAUTIONS xix

1 Intended Audience xx
2 General Precautions xx
3 Safety Precautions xx
4 Operating Environment Precautions xxi
5 Application Precautions xxii
6 Conformance to EC Directives xxiv

SECTION 1
Introduction 1

1-1 Features 2
1-2 System Configuration 3
1-3 Basic Operations 5
1-4 List of Functions 8
1-5 Specifications 9
1-6 Comparison with Existing Models 11
1-7 Control System Principles 13

SECTION 2
Basic Procedures 15

2-1 Basic Operational Flow 16

SECTION 3
Installation and Wiring 19

3-1 Nomenclature and Functions 20
3-2 Installation 22
3-3 External I/O Circuitry 26
3-4 Wiring 35
3-5 Connection Examples for Different Types of Motor Driver 45
3-6 Connection of Unused Axes 58
3-7 Servo Relay Unit 59

SECTION 4
Data Areas 63

4-1 Overall Structure 64
4-2 Common Parameter Area 69
4-3 Axis Parameter Area 74
4-4 Operating Memory Area 94
4-5 Operating Data Area 98
4-6 Memory Operation Data 101
4-7 Zone Data Area 104
4-8 Examples of Parameter Settings 105

SECTION 5
Transferring and Saving Data 113

5-1 Transferring and Saving Data 114
5-2 Writing Data with the WRITE DATA Bit 121
5-3 Reading Data with the READ DATA Bit 126
5-4 Writing Data with IOWR 131
5-5 Reading Data with IORD 138
5-6 Saving Data 142
5-7 Transferring Data with CX-Position 144

TABLE OF CONTENTS

SECTION 6
Defining the Origin 145

6-1 Outline 146
6-2 Origin Search Procedure 147
6-3 Data Settings Required for Origin Search 148
6-4 Origin Search Operation 151
6-5 Origin Search Timing Charts 166
6-6 Present Position Preset 171
6-7 Origin Return 172
6-8 Z-phase Margin 174

SECTION 7
Direct Operation 177

7-1 Outline 178
7-2 Direct Operation Procedure 179
7-3 Setting Data for Direct Operation 179
7-4 Operations With Direct Operation 181
7-5 Direct Operation Timing Charts 184
7-6 Acceleration/Deceleration 186
7-7 Sample Program 189

SECTION 8
Memory Operation 195

8-1 Outline 196
8-2 Memory Operation Procedure 199
8-3 Setting Data for Memory Operation 200
8-4 Positioning Sequences 202
8-5 Completion Codes 209
8-6 Linear Interpolation 213
8-7 Transferring Positioning Sequences 217
8-8 Timing Chart for Memory Operation 219
8-9 Acceleration/Deceleration 223
8-10 Sample Program 226

SECTION 9
Other Operations 229

9-1 Jogging 231
9-2 Teaching 233
9-3 Interrupt Feeding 235
9-4 Forced Interrupt 238
9-5 Deceleration Stop 240
9-6 Override 246
9-7 Error Counter Reset Output and Origin Adjustment Command Output 249
9-8 Backlash Compensation 252
9-9 Software Limit 254
9-10 Stop Function 257
9-11 Easy Backup Function (Ver. 2.0 or later) 258

TABLE OF CONTENTS

SECTION 10
Program Examples 263

10-1 Operating Procedures for Program Examples 264
10-2 Memory Operation 266
10-3 Direct Operation 281
10-4 Linear Interpolation 287
10-5 Origin Search 293
10-6 Override 296
10-7 Transferring and Saving Data 299

SECTION 11
Troubleshooting 305

11-1 Troubleshooting Tables 306
11-2 Introduction 313
11-3 LED Error Indicators 314
11-4 Reading Error Codes 317
11-5 Error Code Lists 318
11-6 Releasing Pulse Output Prohibition and Resetting After Errors 335
11-7 Error Display at the CPU 338
11-8 Reading Error Information with CX-Position 338

SECTION 12
Maintenance and Inspection 339

12-1 Inspection 340
12-2 Routine Inspections 340
12-3 Handling Precautions 341
12-4 Procedure for Replacing a PCU 341

Appendices

A Performance Characteristics 343
B Estimating Times and Pulses for Acceleration/Deceleration 349
C Common Parameter Area 353
D Replacing the C200HW-NC□13 355
E Error Code Lists 359
F Parameter Coding Sheets 363

Index 373

Revision History 377

About this Manual:

This manual describes the operation of the CS1W-NC113/NC133/NC213/NC233/NC413/NC433 Position Control Units and includes the sections described below.

Please read this manual carefully and be sure you understand the information provided before attempting to install and operate the CS1W-NC113/NC133/NC213/NC233/NC413/NC433 Position Control Units.

Section 1 introduces the features of the Position Control Unit and explains the system configuration in which it is used.

Section 2 gives an overview of the procedures required to use the Position Control Unit.

Section 3 provides information on nomenclature and the function of each part, describes the procedures required for wiring and installation, and gives connection examples. Information on using Servo Relay Units is also provided.

Section 4 provides an overview of the parameter and data settings used in Position Control Unit operation and provides information on memory allocation.

Section 5 explains how to transfer and save parameters and data using the data transfer bits, the IOWR and IORD instructions, and CX-Position.

Section 6 explains the origin search and origin return operations.

Section 7 provides an overview of direct operation, describes the parameter and data settings required to perform direct operation, and gives sample programs.

Section 8 provides an overview of memory operation, describes the parameter and data settings required to perform memory operation, and gives sample programs.

Section 9 describes the following operations: jogging, teaching, interrupt feeding, forced interrupt, deceleration stop, override, error counter reset output/origin-adjustment command output, backlash compensation, and software limits.

Section 10 provides examples of programs for using the Position Control Unit.

Section 11 describes how to diagnose and correct errors that can occur during operation.

Section 12 describes methods for maintaining the Position Control Unit.

The ***Appendices*** provide information on estimating times and pulses for acceleration and deceleration, a memory map for the common parameter area, error code lists, information on replacing the C200HW-NC□13, and parameter coding sheets.

⚠ **WARNING** Failure to read and understand the information provided in this manual may result in personal injury or death, damage to the product, or product failure. Please read each section in its entirety and be sure you understand the information provided in the section and related sections before attempting any of the procedures or operations given.

Terms and Conditions Agreement

Warranty, Limitations of Liability

Warranties

● **Exclusive Warranty**

Omron's exclusive warranty is that the Products will be free from defects in materials and workmanship for a period of twelve months from the date of sale by Omron (or such other period expressed in writing by Omron). Omron disclaims all other warranties, express or implied.

● **Limitations**

OMRON MAKES NO WARRANTY OR REPRESENTATION, EXPRESS OR IMPLIED, ABOUT NON-INFRINGEMENT, MERCHANTABILITY OR FITNESS FOR A PARTICULAR PURPOSE OF THE PRODUCTS. BUYER ACKNOWLEDGES THAT IT ALONE HAS DETERMINED THAT THE PRODUCTS WILL SUITABLY MEET THE REQUIREMENTS OF THEIR INTENDED USE.

Omron further disclaims all warranties and responsibility of any type for claims or expenses based on infringement by the Products or otherwise of any intellectual property right.

● **Buyer Remedy**

Omron's sole obligation hereunder shall be, at Omron's election, to (i) replace (in the form originally shipped with Buyer responsible for labor charges for removal or replacement thereof) the non-complying Product, (ii) repair the non-complying Product, or (iii) repay or credit Buyer an amount equal to the purchase price of the non-complying Product; provided that in no event shall Omron be responsible for warranty, repair, indemnity or any other claims or expenses regarding the Products unless Omron's analysis confirms that the Products were properly handled, stored, installed and maintained and not subject to contamination, abuse, misuse or inappropriate modification. Return of any Products by Buyer must be approved in writing by Omron before shipment. Omron Companies shall not be liable for the suitability or unsuitability or the results from the use of Products in combination with any electrical or electronic components, circuits, system assemblies or any other materials or substances or environments. Any advice, recommendations or information given orally or in writing, are not to be construed as an amendment or addition to the above warranty.

See http://www.omron.com/global/ or contact your Omron representative for published information.

Limitation on Liability; Etc

OMRON COMPANIES SHALL NOT BE LIABLE FOR SPECIAL, INDIRECT, INCIDENTAL, OR CONSEQUENTIAL DAMAGES, LOSS OF PROFITS OR PRODUCTION OR COMMERCIAL LOSS IN ANY WAY CONNECTED WITH THE PRODUCTS, WHETHER SUCH CLAIM IS BASED IN CONTRACT, WARRANTY, NEGLIGENCE OR STRICT LIABILITY.

Further, in no event shall liability of Omron Companies exceed the individual price of the Product on which liability is asserted.

Application Considerations

Suitability of Use

Omron Companies shall not be responsible for conformity with any standards, codes or regulations which apply to the combination of the Product in the Buyer's application or use of the Product. At Buyer's request, Omron will provide applicable third party certification documents identifying ratings and limitations of use which apply to the Product. This information by itself is not sufficient for a complete determination of the suitability of the Product in combination with the end product, machine, system, or other application or use. Buyer shall be solely responsible for determining appropriateness of the particular Product with respect to Buyer's application, product or system. Buyer shall take application responsibility in all cases.

NEVER USE THE PRODUCT FOR AN APPLICATION INVOLVING SERIOUS RISK TO LIFE OR PROPERTY OR IN LARGE QUANTITIES WITHOUT ENSURING THAT THE SYSTEM AS A WHOLE HAS BEEN DESIGNED TO ADDRESS THE RISKS, AND THAT THE OMRON PRODUCT(S) IS PROPERLY RATED AND INSTALLED FOR THE INTENDED USE WITHIN THE OVERALL EQUIPMENT OR SYSTEM.

Programmable Products

Omron Companies shall not be responsible for the user's programming of a programmable Product, or any consequence thereof.

Disclaimers

Performance Data

Data presented in Omron Company websites, catalogs and other materials is provided as a guide for the user in determining suitability and does not constitute a warranty. It may represent the result of Omron's test conditions, and the user must correlate it to actual application requirements. Actual performance is subject to the Omron's Warranty and Limitations of Liability.

Change in Specifications

Product specifications and accessories may be changed at any time based on improvements and other reasons. It is our practice to change part numbers when published ratings or features are changed, or when significant construction changes are made. However, some specifications of the Product may be changed without any notice. When in doubt, special part numbers may be assigned to fix or establish key specifications for your application. Please consult with your Omron's representative at any time to confirm actual specifications of purchased Product.

Errors and Omissions

Information presented by Omron Companies has been checked and is believed to be accurate; however, no responsibility is assumed for clerical, typographical or proofreading errors or omissions.

PRECAUTIONS

This section provides general precautions for using the Position Control Units and related devices.

The information contained in this section is important for the safe and reliable application of the Position Control Unit. You must read this section and understand the information contained before attempting to set up or operate a Position Control Unit.

1 Intended Audience xx
2 General Precautions xx
3 Safety Precautions xx
4 Operating Environment Precautions xxi
5 Application Precautions xxii
6 Conformance to EC Directives xxiv
6-1 Applicable Directives xxiv
6-1-1 Concepts xxiv
6-1-2 Conformance to EC Directives xxiv
6-1-3 Installation Within Control Panel xxiv

1 Intended Audience

This manual is intended for the following personnel, who must also have knowledge of electrical systems (an electrical engineer or the equivalent).

- Personnel in charge of installing FA systems.
- Personnel in charge of designing FA systems.
- Personnel in charge of managing FA systems and facilities.

2 General Precautions

The user must operate the product according to the performance specifications described in the operation manuals.

Before using the product under conditions which are not described in the manual or applying the product to nuclear control systems, railroad systems, aviation systems, vehicles, combustion systems, medical equipment, amusement machines, safety equipment, and other systems, machines, and equipment that may have a serious influence on lives and property if used improperly, consult your OMRON representative.

Make sure that the ratings and performance characteristics of the product are sufficient for the systems, machines, and equipment, and be sure to provide the systems, machines, and equipment with double safety mechanisms.

This manual provides information for using the Position Control Unit. Be sure to read this manual before attempting to use the Unit and keep this manual close at hand for reference during operation.

⚠ WARNING It is extreme important that Position Control Units and related devices be used for the specified purpose and under the specified conditions, especially in applications that can directly or indirectly affect human life. You must consult with your OMRON representative before applying Position Control Units and related devices to the above mentioned applications.

3 Safety Precautions

⚠ WARNING Never attempt to disassemble any Units while power is being supplied. Doing so may result in serious electric shock.

⚠ WARNING Do not attempt to disassemble, repair, or modify any Units. Any attempt to do so may result in malfunction, fire, or electric shock.

⚠ WARNING Never touch any of the terminals while power is being supplied. Doing so may result in serious electric shock.

⚠ WARNING Provide safety measures in external circuits (i.e., not in the Programmable Controller or Position Control Unit) to ensure safety in the system if an abnormality occurs due to malfunction of the PLC, malfunction of the PCU (Position Control Unit), or external factors affecting the operation of the PLC or PCU. Not providing sufficient safety measures may result in serious accidents.

- Emergency stop circuits, interlock circuits, limit circuits, and similar safety measures must be provided in external control circuits.

- The PLC will turn OFF all outputs when its self-diagnosis function detects any error or when a severe failure alarm (FALS) instruction is executed. As a countermeasure for such errors, external safety measures must be provided to ensure safety in the system.
- The PLC or PCU outputs may remain ON or OFF due to deposits on or burning of the output relays, or destruction of the output transistors. As a countermeasure for such problems, external safety measures must be provided to ensure safety in the system.
- When the 24-VDC output (service power supply to the PLC) is overloaded or short-circuited, the voltage may drop and result in the outputs being turned OFF. As a countermeasure for such problems, external safety measures must be provided to ensure safety in the system. External safety measures must also be taken to ensure safety in the event of unexpected operation when connecting or disconnecting the PCU's connectors.

⚠ **Caution** When positioning to a position determined using the teaching function, set the position designation setting in the positioning sequence to absolute positioning. If it is set to relative positioning, positioning will be performed to a position other than the one obtained with the teaching function.

⚠ **Caution** Execute online edit only after confirming that no adverse effects will be caused by extending the cycle time. Otherwise, the input signals may not be readable.

⚠ **Caution** Confirm the safety of the destination node before transferring a program to the node or changing the contents of I/O memory. Doing either of these without confirming safety may result in injury.

⚠ **Caution** Do not save data into the flash memory during memory operation or while the motor is running. Otherwise, unexpected operation may be caused.

⚠ **Caution** Do not reverse the polarity of the 24-V power supply. The polarity must be correct. Otherwise, the motor may start running unexpectedly and may not stop.

⚠ **Caution** Make sure the unit version of the Position Control Unit is 2.2 or later before using the CW/CCW Pulse Output Selection Function. Otherwise, the pulse output may be in the opposite direction from what was intended and the machine may be damaged.

4 Operating Environment Precautions

⚠ **Caution** Do not operate the control system in the following locations:

- Locations subject to direct sunlight.
- Locations subject to temperatures or humidity outside the range specified in the specifications.
- Locations subject to condensation as the result of severe changes in temperature.
- Locations subject to corrosive or flammable gases.

- Locations subject to dust (especially iron dust) or salts.
- Locations subject to exposure to water, oil, or chemicals.
- Locations subject to shock or vibration.

⚠ **Caution** Take appropriate and sufficient countermeasures when installing systems in the following locations:

- Locations subject to static electricity or other forms of noise.
- Locations subject to strong electromagnetic fields.
- Locations subject to possible exposure to radioactivity.
- Locations close to power supplies.

⚠ **Caution** The operating environment of the PLC System can have a large effect on the longevity and reliability of the system. Improper operating environments can lead to malfunction, failure, and other unforeseeable problems with the PLC System. Be sure that the operating environment is within the specified conditions at installation and remains within the specified conditions during the life of the system.

5 Application Precautions

Observe the following precautions when using the PCU or the PLC.

⚠ **WARNING** Failure to abide by the following precautions could lead to serious or possibly fatal injury. Always heed these precautions.

- Always connect to a ground of 100 Ω or less when installing the Units. Not connecting to a ground of 100 Ω or less may result in electric shock.
- Always turn OFF the power supply to the PLC before attempting any of the following. Not turning OFF the power supply may result in malfunction or electric shock.
  - Mounting or dismounting Power Supply Units, I/O Units, CPU Units, Memory Cassettes, or any other Units.
  - Assembling the Units.
  - Setting DIP switches or rotary switches.
  - Connecting cables or wiring the system.
  - Connecting or disconnecting the connectors.

⚠ **Caution** Failure to abide by the following precautions may lead to faulty operation of the PLC, the PCU. or the system, or could damage the PLC or PCU. Always heed these precautions.

- Fail-safe measures must be taken by the customer to ensure safety in the event of incorrect, missing, or abnormal signals caused by broken signal lines, momentary power interruptions, or other causes.
- Interlock circuits, limit circuits, and similar safety measures in external circuits (i.e., not in the Programmable Controller) must be provided by the customer.
- Install external breakers and take other safety measures against short-circuiting in external wiring. Insufficient safety measures against short-circuiting may result in burning.

- Install the PCU as far as possible from devices that generate strong high-frequency noise.
- Be sure that all the mounting screws, terminal screws, and cable connector screws are tightened to the torque specified in the relevant manuals. Incorrect tightening torque may result in malfunction.
- Always use the power supply voltages specified in the operation manuals. An incorrect voltage may result in malfunction or burning.
- Take appropriate measures to ensure that the specified power with the rated voltage and frequency is supplied in places where the power supply is unstable. An incorrect power supply may result in malfunction.
- Use crimp terminals for wiring. Do not connect bare stranded wires directly to terminals. Connection of bare stranded wires may result in burning.
- Leave the label attached to the Unit when wiring. Removing the label may result in malfunction if foreign matter enters the Unit.
- Remove the label after the completion of wiring to ensure proper heat dissipation. Leaving the label attached may result in malfunction.
- Do not apply voltages to the Input Units in excess of the rated input voltage. Excess voltages may result in burning.
- Do not apply voltages or connect loads to the Output Units in excess of the maximum switching capacity. Excess voltage or loads may result in burning.
- Check the user program for proper execution before actually running it on the Unit. Not checking the program may result in an unexpected operation.
- Be sure that the terminal blocks, Memory Units, expansion cables, and other items with locking devices are properly locked into place. Improper locking may result in malfunction.
- Double-check all wiring and switch settings before turning ON the power supply. Incorrect wiring may result in burning.
- Disconnect the Power Supply Unit's LG terminal from the GR terminal when testing insulation resistance and dielectric strength. Not disconnecting the LG and GR terminals may result in burning.
- Confirm that no adverse effect will occur in the system before attempting any of the following. Not doing so may result in an unexpected operation.
    - Changing the operating mode of the PLC (including the setting of the startup operating mode).
    - Force-setting/force-resetting any bit in memory.
    - Changing the present value of any word or any set value in memory.
- Resume operation only after transferring to the new CPU Unit the contents of the DM Area, HR Area, and other data required for resuming operation. Not doing so may result in an unexpected operation.
- Do not pull on the cables or bend the cables beyond their natural limit. Doing either of these may break the cables.
- Do not place objects on top of the cables or other wiring lines. Doing so may break the cables.
- Resume operation only after transferring the system parameter data to the PCU and saving the data to flash memory. Not doing so may result in an unexpected operation.
- Confirm that set parameters and data operate properly.

- Check the pin numbers before wiring the connectors.
- Perform wiring according to specified procedures.
- Before touching a Unit, be sure to first touch a grounded metallic object in order to discharge any static build-up. Not doing so may result in malfunction or damage.
- Do not drop the product or subject it to excessive vibration or shock.

6 Conformance to EC Directives

6-1 Applicable Directives

- EMC Directives

6-1-1 Concepts

EMC Directives

OMRON devices that comply with EC Directives also conform to the related EMC standards so that they can be more easily built into other devices or machines. The actual products have been checked for conformity to EMC standards (see the following note). Whether the products conform to the standards in the system used by the customer, however, must be checked by the customer.

EMC-related performance of the OMRON devices that comply with EC Directives will vary depending on the configuration, wiring, and other conditions of the equipment or control panel in which the OMRON devices are installed. The customer must, therefore, perform final checks to confirm that devices and the overall machine conform to EMC standards.

Note Applicable EMC (Electromagnetic Compatibility) standards are as follows:

EMS (Electromagnetic Susceptibility): EN61000-6-2
EMI (Electromagnetic Interference): EN61000-6-4
(Radiated emission: 10-m regulations)

6-1-2 Conformance to EC Directives

The PCUs comply with EC Directives. To ensure that the machine or device in which an PCU is used complies with EC directives, the PCU must be installed as follows:

1,2,3...

1. The PCU must be installed within a control panel.
2. Reinforced insulation or double insulation must be used for the DC power supplies used for the communications and I/O power supplies.
3. PCUs complying with EC Directives also conform to the Common Emission Standard (EN61000-6-4). With regard to the radiated emission (10-m regulations), countermeasures will vary depending on the devices connected to the control panel, wiring, the configuration of the system, and other conditions. The customer must, therefore, perform final checks to confirm that devices and the overall machine conform to EC Directives.

6-1-3 Installation Within Control Panel

Unnecessary clearance in cable inlet or outlet ports, operation panel mounting holes, or in the control panel door may cause electromagnetic wave leakage or interference. In this case, the product may fail to meet EC Directives. In order to prevent such interference, fill clearances in the control panel with conductive packing. (In places where conductive packing comes in contact with the control panel, ensure electrical conductivity by removing the paint coating or masking these parts when painting.)

SECTION 1
Introduction

This section introduces the features of the Position Control Unit and explains the system configuration in which it is used.

1-1 Features 2
1-1-1 Functions. 2
1-2 System Configuration 3
1-2-1 CS1W-NC413 System Configuration Example 4
1-3 Basic Operations 5
1-3-1 Position Control 5
1-3-2 Speed Control 7
1-3-3 Other Operations. 7
1-4 List of Functions 8
1-5 Specifications 9
1-5-1 Basic Specifications 9
1-5-2 Performance Specifications 10
1-6 Comparison with Existing Models 11
1-7 Control System Principles. 13
1-7-1 Data Flow 13
1-7-2 Control System Principles 14
1-7-3 Basic Positioning System Design 14

1-1 Features

Position Control Unit

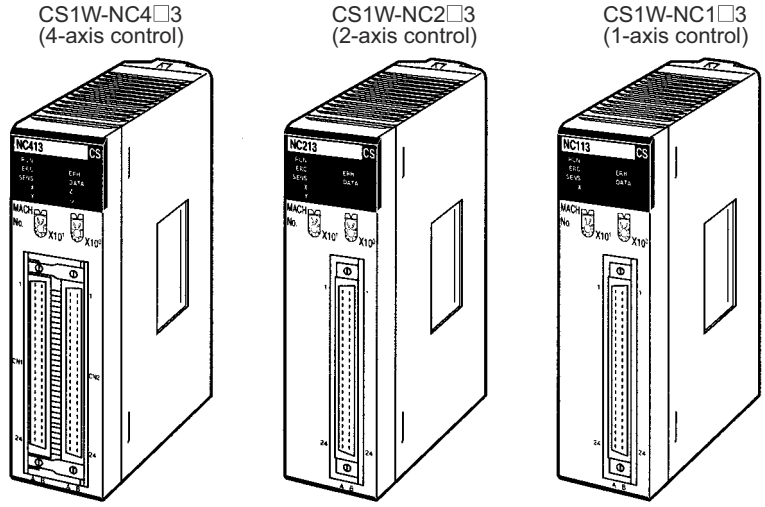

These Position Control Units are CS-series Special I/O Units. The Units receive instructions from the Programming Controller's Work Area and output pulse trains to various motor drivers for positioning.

1-1-1 Functions

High-speed Response

The Position Control Unit (PCU) responds to instructions from the CPU Unit within 2 ms. (For more details on the conditions required, refer to *Appendix A Performance Characteristics*.)

Memory Operation and Direct Operation

There are two different control methods. The first is memory operation, in which the data required for positioning is transferred to the PCU and then specified for position control, and the second is direct operation, in which the target position and target speed are set each time from the CPU Unit.

Number of Control Axes and Output Type

The PCU is available with 1, 2, or 4 control axes. With 2-axis and 4-axis models, linear interpolation is possible for all axes. Either open collector output or line driver output is available for any number of control axes. Choose the most appropriate model according to the number of controlled axes and the desired output type.

Motor Driver Selectable by Axis

A stepping motor driver and a pulse train input type Servo Drive can be connected to the PCU. It is possible to set different operating modes for different axes allowing the combined use of different types of motor driver.

Interrupt Feeding

When an interrupt is input during pulse output, positioning is continued for only a specified amount and then stopped.

Position and Speed Control Ranges

Positioning can be performed for positions in the range –1,073,741,823 to 1,073,741,823 pulses and speeds in the range 1 to 500,000 pps in 1-pulse units. This means that positioning is possible over a wide range with speed precision.

Data Capacity and Backup

The amounts of data that can be set for memory operation are shown in the following table:

Type of data	Number of data items per axis
Positioning sequences, speeds, positions	100
Acceleration times, deceleration times	9
Dwell times	19
Zones	3

These data items are transferred to the PCU for use. Once they have been transferred to the PCU they can be saved to the PCU's flash memory, so there is no need for battery maintenance.

Note There is a limit to the service life of the flash memory. A total of up to 100,000 data saving operations can be performed.

CX-Position

The PCU is compatible with the Windows-based NC Support Tool (CX-Position) that enables setting of the PCUs in a Windows environment. Using the CS-series single-port multi-access function, creation and transfer of parameters and data for PCUs as well as operation monitoring are possible from the same environment as the software used for CPU Unit ladder programming (CX-Programmer).

Simple Programming Using Function Blocks (See note.)

Function blocks can be used to simplify operation of the PCU in programming complicated diagrams. There are function blocks for origin searches, ABSOLUTE MOVEMENT commands, and RELATIVE MOVEMENT commands.

Note Refer to the following documents for details on function blocks.

- Using Function Blocks for the First Time
  Function Block Introduction Guide (R133)
- Using Function Blocks for Specific Devices
  OMRON FB Library Start-up Guide (R123)
  OMRON FB Library Reference Manual (W442)

1-2 System Configuration

The PCU receives control signals (CW limit, CCW limit, origin, origin proximity, emergency stop, and external interrupt input signals) from devices and a control panel, and outputs pulse trains to stepping motor drivers and Servo Drives.

1-2-1 CS1W-NC413 System Configuration Example

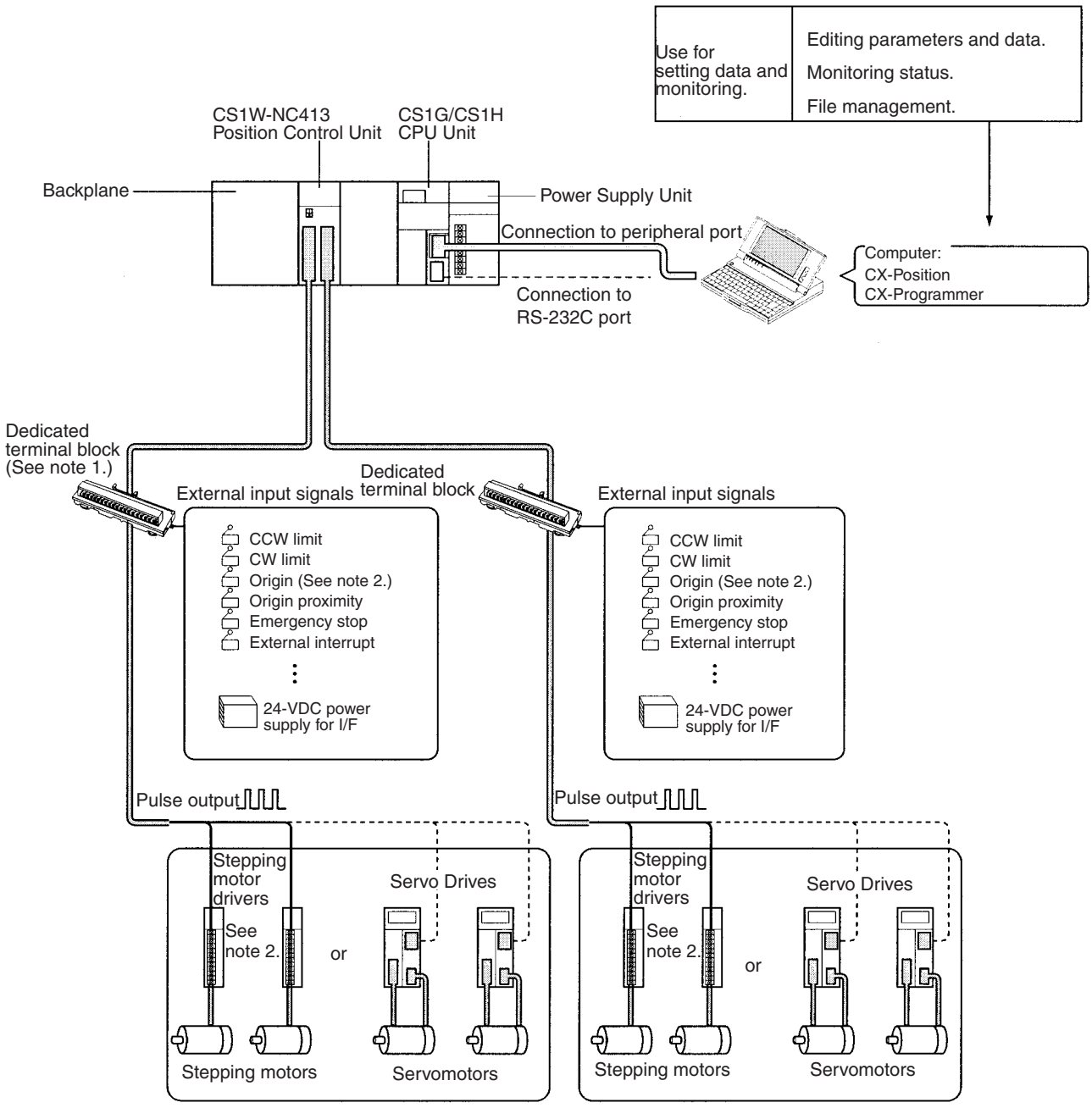

Note (1) A dedicated cable is available for connecting the PCU to the dedicated terminal block. For details, refer to *3-7 Servo Relay Unit*.

(2) Origin input signals cannot be used as external connection terminals with dedicated terminal blocks. Connect the Z-phase signal to the Servo Drive using the dedicated cable. The connecting cable required between the PCU or dedicated terminal block and stepping motor driver is not provided.

1-3 Basic Operations

The PCU's operations are as follows:

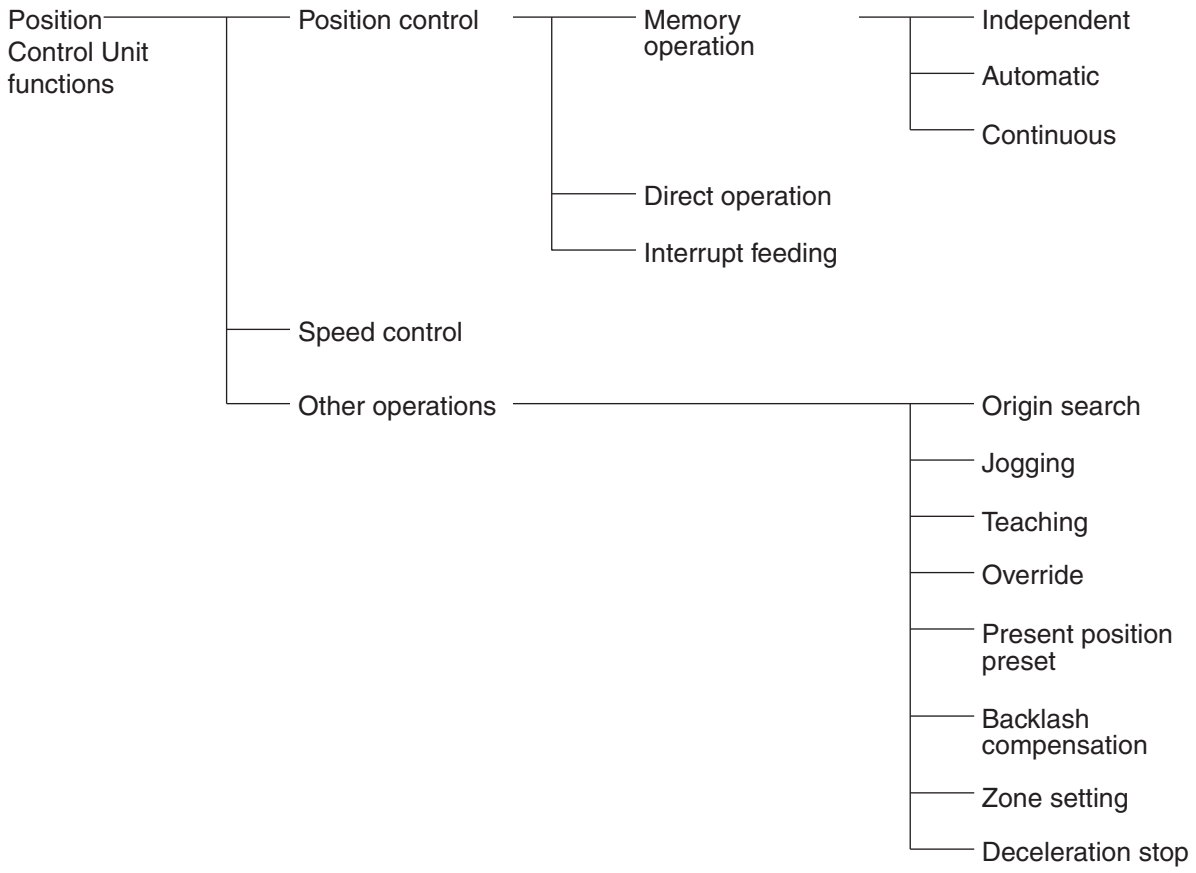

1-3-1 Position Control

Positioning can be executed with either an absolute value (i.e., to an absolute position from the origin) or with an incremental value (i.e., to a relative position from the present position).

There are two methods for positioning: memory operation and direct operation. Interrupt feeding, in which operation proceeds for a specified amount after an interrupt input, is also possible.

Direct Operation

With direct operation, positions and speeds are set directly from the CPU Unit (ladder program), and positioning is executed according to operating commands. It is also possible to change the speed and send commands to move

to different positions while positioning is being performed. Linear interpolation, however, is not possible during direct operation.

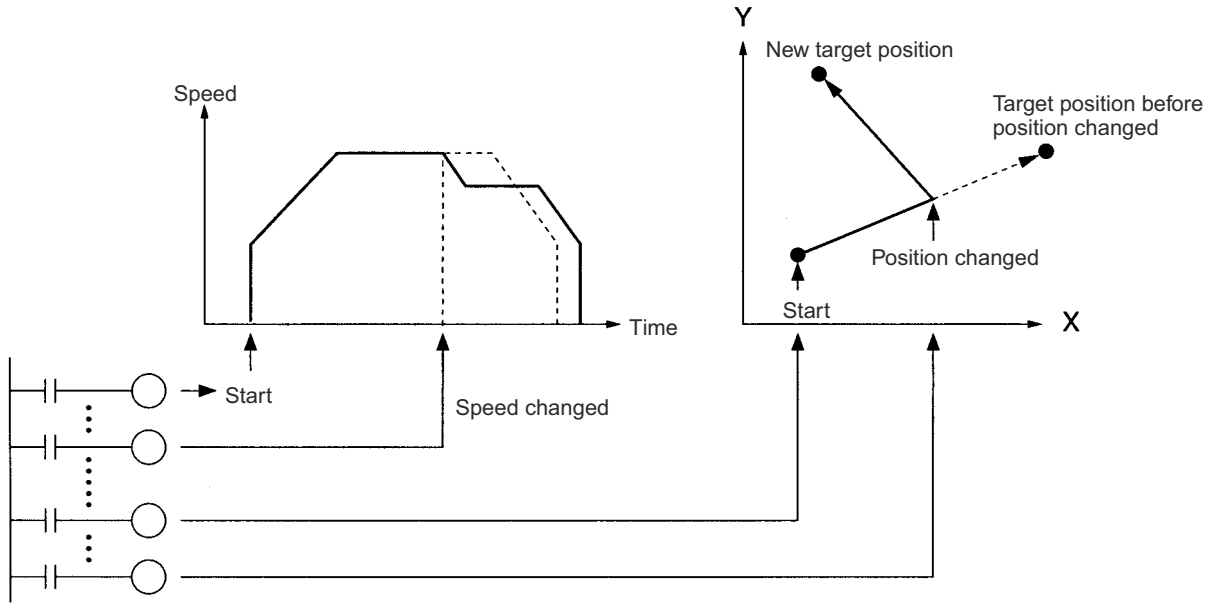

Memory Operation

With memory operation, positioning sequences (i.e., individual positioning operations, which include data such as positions and speeds) are transferred to the PCU in advance, and then positioning is executed from the CPU Unit by specifying those positioning sequences by number. Depending on the completion code that is set, positioning sequences can be executed using independent positioning, automatic positioning, or continuous positioning. In the following illustrations, “#0” “#1” “#2” and “#3” indicate positioning sequence numbers.

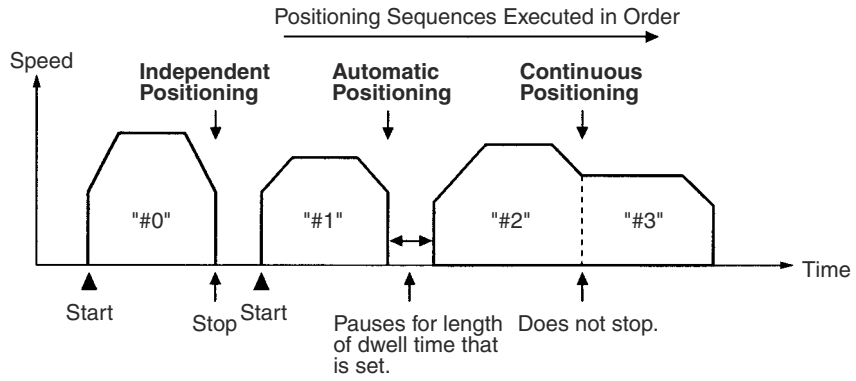

Interrupt Feeding

When an interrupt input signal is received, positioning is continued for the specified amount of pulses and then stopped.

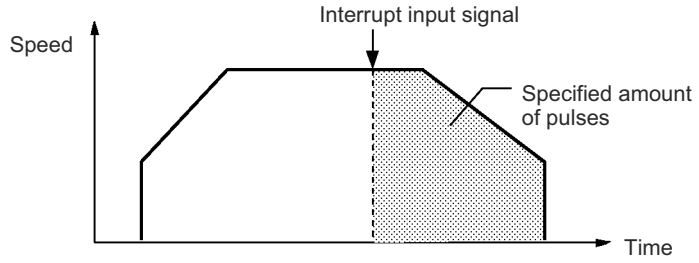

1-3-2 Speed Control

When a start is executed once, pulses are continuously output at a constant rate. The pattern depends on the completion code that is set for “memory operation” positioning sequences. To stop the sequence, use the STOP command.

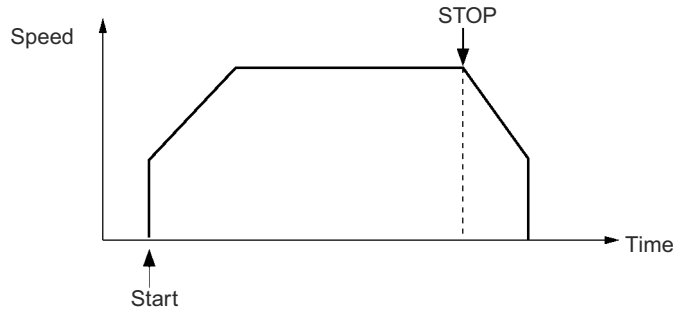

1-3-3 Other Operations

Origin Search

The origin search operation finds the origin for the designated axis.

Jogging

The jogging operation moves a specified axis at a designated speed and then stops it.

Teaching

The teaching operation takes the present position for the specified positioning sequence.

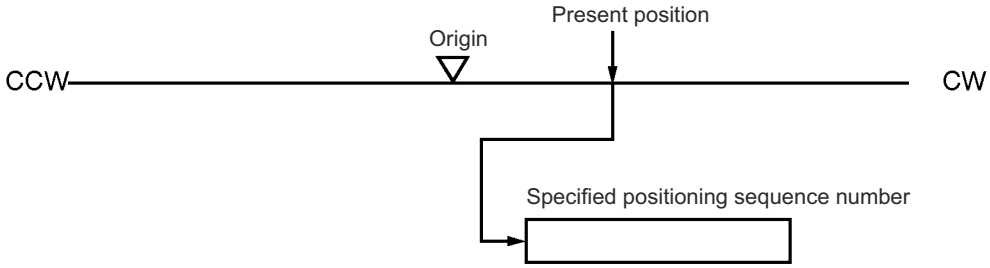

Override

When the override is enabled during positioning, the target speed is changed to the override speed.

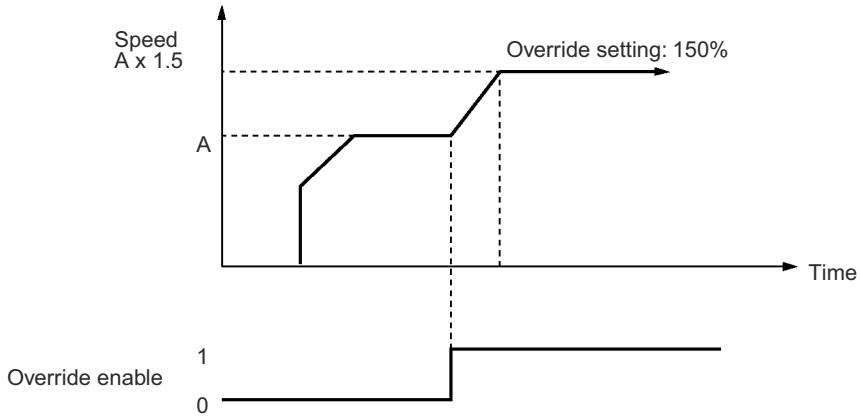

Changing the Present Position

The PRESENT POSITION PRESET command changes the present position to a specified position.

Backlash Compensation

This operation compensates for the amount of mechanical play, or “looseness,” present in gears.

Zones

A zone is a range of positions which can be defined so that flags are turned ON whenever the present position is within the range.

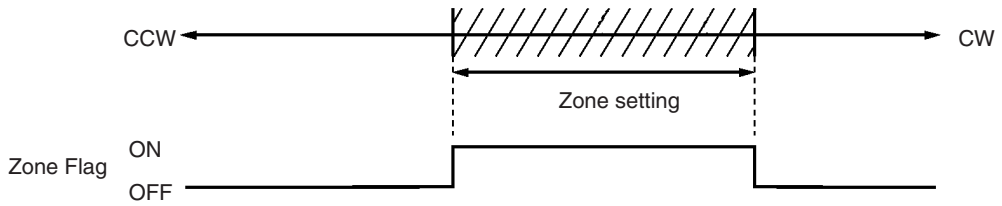

Deceleration Stop

The STOP command decelerates positioning to a stop.

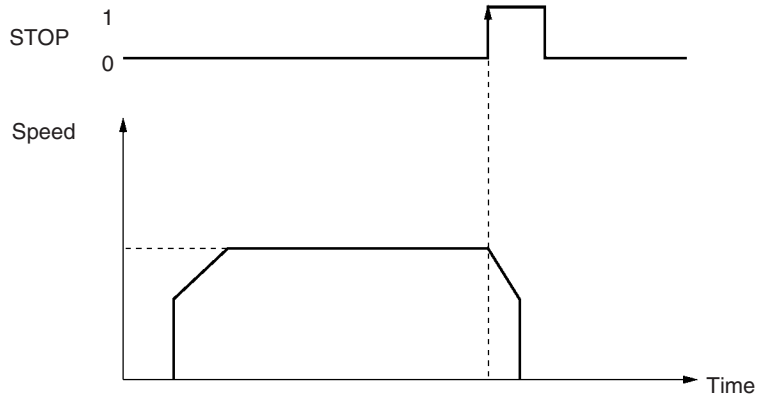

1-4 List of Functions

Group	Name	Function	Page
Origin determination	Origin search	Starts the motor and establishes the origin.	147
	Present position preset	Sets the position at which the motor is stopped to a specified value, and establishes the origin.	171
	Origin return	Returns the axis to the origin.	172
Direct operation	Absolute/relative movement	Designates position, speed, and acceleration/deceleration times, and carries out absolute or relative positioning.	178
	Interrupt feeding	Designates position, speed, and acceleration/deceleration times, and after the interrupt signal turns ON, moves a specified amount before stopping.	235
Memory operation	Absolute/relative movement	Continuously performs absolute or relative positioning according to positioning sequences previously set in the PCU.	196
	Linear interpolation	Continuously performs positioning by linear interpolation according to positioning sequences previously set in the PCU.	213
	Interrupt feeding	Performs interrupt feeding according to positioning sequences previously set in the PCU.	235
	Speed control	Outputs pulses at a fixed speed according to positioning sequences set in the PCU.	212
	Forced interrupt	Stops the positioning operation currently being performed and performs another positioning operation.	238
Data saving/transfer	High-speed transfer	Transfers data between the CPU Unit and the PCU in a short time using the IOWR and IORD instructions in the ladder program.	131, 138
	Batch transfer	Transfers a large amount of data in one operation between the CPU Unit and the PCU.	121, 126
	Saving	Saves parameters, position data, and speed data to non-volatile memory (flash memory) in the PCU.	142

Group	Name	Function	Page
Common to direct operation and memory operation	Jogging	Outputs pulses at a fixed speed in the CW or CCW direction.	231
	Teaching	Reads the currently stopped position as position data.	233
	Deceleration stop	Decelerates axes to a stop during positioning. Axes cannot be moved while the STOP Bit is ON.	240
	Override	Changes the axis speed during positioning.	246
	Error counter reset	Clears the error counter of the Servo Drive to 0.	249
	Backlash compensation	Increases positioning accuracy by compensating for play in the mechanical system.	252
	Software limit	In order to prevent damage to external devices due to unexpected positioning caused by malfunction, in addition to CW and CCW limit input signals, positioning is also monitored using the software.	254
	Zones	Notifies the CPU whether or not the position is within a set region. This function is used when interlocking or performing simultaneous control with peripheral devices.	104
	Acceleration/deceleration curve, acceleration/deceleration time designations	Performs acceleration/deceleration according to the basic trapezoidal curve, or an S-curve that greatly helps to reduce mechanical vibration. Specifies the method for setting the acceleration/deceleration times.	86
	Initial pulse	Starts pulse output in a short time in response to an operating command from the CPU Unit.	93
	Stop function	Detects an error either at the CPU Unit or the PCU and stops pulse output either with or without a deceleration curve.	257
	Release prohibit/error reset	Releases the pulse output prohibit status and at the same time clears the error code to 0.	335

1-5 Specifications

1-5-1 Basic Specifications

Item	Model		
	CS1W-NC113/133	**CS1W-NC213/233**	**CS1W-NC413/433**
Power supply voltage	5 VDC (for the PCU itself)		
	24 VDC (external power supply)		
	5 VDC (external power supply; line driver output only)		
Allowable power supply voltage range	4.75 to 5.25 VDC (for the PCU itself)		
	21.6 to 26.4 VDC (external power supply)		
	4.75 to 5.25 VDC (external power supply; line driver output only)		
Internal current consumption	250 mA max. at 5 VDC	250 mA max. at 5 VDC	360 mA max. at 5 VDC
Current consumption of external power supply	NC113: 30 mA max. at 24 VDC NC133: 10 mA max. at 24 VDC NC133: 60 mA max. at 5 VDC	NC213: 50 mA max. at 24 VDC NC233: 20 mA max. at 24 VDC NC233: 120 mA max. at 5 VDC	NC413: 90 mA max. at 24 VDC NC433: 30 mA max. at 24 VDC NC433: 220 mA max. at 5 VDC
External dimensions	130 (H) × 35 (W) × 101 (D) (all models)		
Weight	250 g max.	250 g max.	300 g max.
Safety standards	UL, CSA, EC (EMC Directive)		

Note Specifications not listed above conform to CS Series general specifications.

1-5-2 Performance Specifications

Item		Model		
		CS1W-NC113/133	**CS1W-NC213/233**	**CS1W-NC413/433**
Applicable PLC models		CS-series PLCs		
I/O requirements	Words	5 words	10 words	20 words
	Slots	1 slot		
Controlled driver		Pulse-train input-type Servo Drive or stepping motor driver NC113/213/413 models have open collector output. NC133/233/433 models have line driver output.		
Control	Control system	Open-loop control by pulse train output		
	Number of control axes	1 axis	2 axes	4 axes
Control unit		Pulse		
Positioning operations		Two types: memory operation and direct operation		
	Independent	1 axis	2 independent axes	4 independent axes
	Linear interpolation	None	2 axes max.	4 axes max.
	Speed control	1 axis	2 independent axes	4 independent axes
	Interrupt feeding	1 axis	2 independent axes	4 independent axes
Positions	Range	–1,073,741,823 to 1,073,741,823 pulses (See note.)		
	Data items	100/axis		
Speeds	Range	1 pps to 500 Kpps		
	Data items	100/axis		
Acceleration and deceleration times	Range	0 to 250 s, until maximum speed is reached.		
	Data items	9/axis for acceleration and deceleration each		
Functions and settings	Origin search	Origin proximity input signal: selectable (absent, N.O. or N.C. contact). Origin input signal: selectable (N.O. or N.C. contact) Origin compensation: –1,073,741,823 to 1,073,741,823 pulses Origin search speed: High-speed or proximity-speed can be set. Origin detection method: May be set to stop upon origin input signal after proximity input signal has turned ON, to stop upon origin input signal after proximity input signal has turned OFF, to stop upon origin input signal without using proximity input signal, or to stop upon origin input signal after limit input signal has turned OFF. N.O. = Normally open N.C. = Normally closed		
	Jogging	Jogging can be executed at a specified speed.		
	Dwell times	19/axis can be set from 0 to 9.99 s (unit: 0.01 s).		
	Acceleration/ deceleration curves	Trapezoidal or S-curve (Can be set separately for each axis.)		
	Zones	Zone Flag turns ON when present position is within a specified zone. Three zones can be set for each axis.		
	Software limits	Can be set within a range of –1,073,741,823 to 1,073,741,823 pulses.		
	Backlash compensation	0 to 9,999 pulses. Compensation speed can also be set.		
	Teaching	With a command from the PLC, the present position can be taken as the position data.		
	Deceleration stop	The STOP command causes positioning to decelerate to a stop according to the specified deceleration time.		
	Emergency stop	Pulse outputs are stopped by an external emergency stop command.		

Item		Model		
		CS1W-NC113/133	CS1W-NC213/233	CS1W-NC413/433
Functions and settings	Present position preset	The PRESENT POSITION PRESET command can be used to change the present position to a specified value.		
	Override	When the override enabling command is executed during positioning, the target speed is changed by applying the override coefficient. Possible to set to a value from 1 to 999% (by an increment of 1%)		
	Data saving	1) Saving to flash memory. (Can be written 100,000 times.) 2) Reading from PLC area by data reading instruction. 3) Reading by Support Tool and saving to personal computer hard disk or floppy disk.		
External I/O	Inputs	Prepare the following inputs for each axis: CW and CCW limit input signals, origin proximity input signal, origin input signal, emergency stop input signal, positioning completed signal, interrupt input signal		
	Outputs	Prepare the following outputs for each axis: Pulse outputs CW/CCW pulses, pulse outputs and direction outputs can be switched. Either error counter reset or origin-adjustment command outputs can be selected depending on the mode.		
Pulse output distribution period		1-axis operation: 4 ms Linear interpolation: 8 ms		
Response time		Refer to *Appendix A Performance Characteristics*.		
Self-diagnostic function		Flash memory check, memory loss check, CPU bus check		
Error detection function		Overtravel, CPU error, software limit over, emergency stop		

Note (1) The additional functions supported by Unit version 2.0 can be used only when the PCU is installed with a CS1-H CPU Unit (either CPU Unit Ver. 2.0 or Pre-Ver. 2.0 CPU Unit). These functions cannot be used if the PCU is installed with a CS1 CPU Unit (with -V1 suffix).
For details on Unit versions, refer to *Unit Versions of CS-series Position Control Units* on page vi. For details on additional functions supported for unit version 2.0, refer to *Unit Versions of CS-series Position Control Units* on page vi.

(2) When performing linear interpolation, the distances that can be moved will vary. For details, refer to *8-6 Linear Interpolation*.

1-6 Comparison with Existing Models

The differences between CS1W-NC113/133/213/233/413/433 and OMRON's C200HW-NC413/213/113 are given in the following table. When replacing the C200HW-NC413/213/113 with this model, refer to *Appendix D Replacing the C200HW-NC□13*.

Item	CS1W-NC4□3/2□3/1□3	C200HW-NC413/213/113
Unit number allocation	Allocate unit numbers in the range 0 to 95. 1-axis and 2-axis PCUs: One unit number allocated 4-axis PCUs: 2 unit numbers allocated	Allocate unit numbers in the range 0 to 15. 1-axis and 2-axis PCUs: One unit number allocated 4-axis PCUs: 2 unit numbers allocated
Pulse output type	2 types: open collector output and line driver output	Open collector output only
Format of data exchanged between PLC and PCU	Binary format (hexadecimal) Example: Present position is output to the PLC in 32-bit signed binary format.	BCD format Example: Present position is output to the PLC in BCD format.
Position designation range	–1,073,741,823 to 1,073,741,823 pulses	–9,999,999 to 9,999,999 pulses
Present position range	–2,147,483,647 to 2,147,483,647 pulses	–9,999,999 to 9,999,999 pulses
Zone range	–1,073,741,823 to 1,073,741,823 pulses	–9,999,999 to 9,999,999 pulses
Speed designation range	1 to 500,000 pps, set in pps units	1 to 500,000 pps, set in units of the smallest multiplication factor specified
CPU Unit scan timeover for END refresh	0.5 ms max. per PCU	2.6 to 4.5 ms per PCU
CPU Unit scan timeover due to IOWR/IORD instruction	1 ms max. per instruction	2.4 to 62 ms per instruction
Time between startup instruction from the ladder program and pulse output	2 ms max. (at optimum conditions)	7.51 ms max. (at optimum conditions)
Operating data area	The following 3 areas can be specified: DM Area words allocated to Special I/O Units, user-specified DM Area words, and user-specified EM Area words.	The following 2 areas can be specified: User-specified DM Area words and user-specified EM Area words. (The DM Area words allocated to Special I/O Units cannot be specified.)
Corresponding EM banks	Banks 0 to C	Bank 0 only
Clearing error codes	Possible	Not possible (only cleared to 0 when startup instruction is made)
Parameter setting	Settings only required for the axes being used.	Settings required for all axes.
Mounting on C200H Slave Rack (remote I/O)	Not possible	Possible
Support Software	CX-Position (Conversion of parameters and data created using the SYSMAC-NCT possible.)	SYSMAC-NCT

1-7 Control System Principles

1-7-1 Data Flow

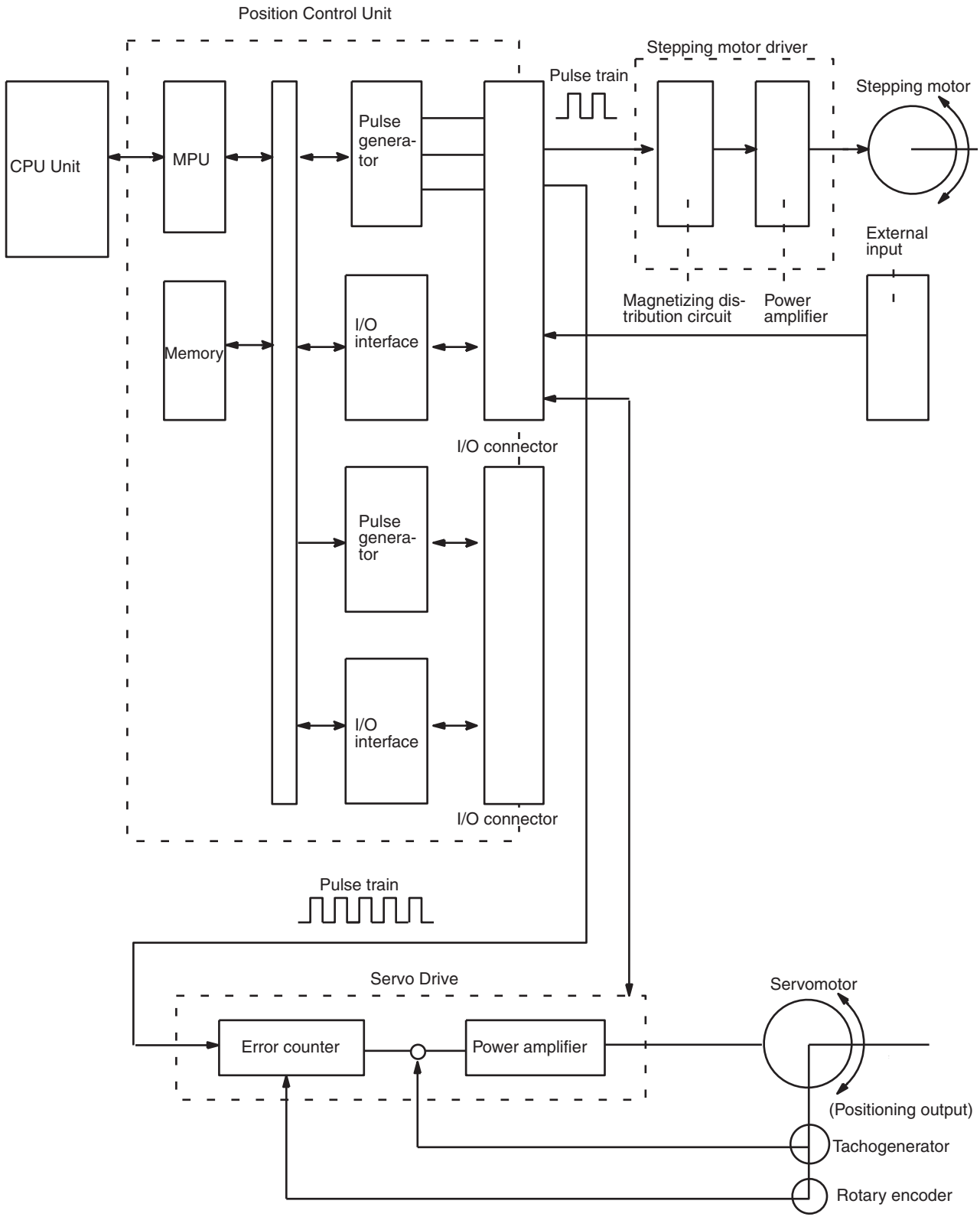

1-7-2 Control System Principles

Open-Loop System

In an open-loop system, positioning is controlled according to the number of input pulses that the motor receives, and no position feedback is provided. The PCUs all employ pulse-output-type open-loop systems, and the most commonly used motor for this type of control system is a stepping motor. The angle of rotation of a stepping motor can be controlled through the number of pulse signals supplied to the motor driver. The number of rotations of the stepping motor is proportional to the number of pulses supplied by the PCU, and the rotational speed of the stepping motor is proportional to the frequency of the pulse train.

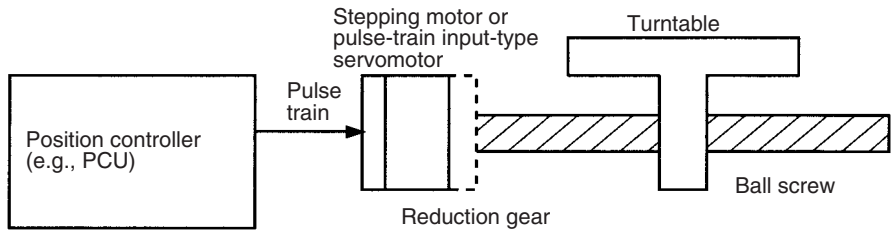

1-7-3 Basic Positioning System Design

The following diagram and parameters illustrate a simplified positioning system.

M: Reduction ratio
P: Feed screw pitch (mm/revolution)
V: Feed velocity of object being positioned (mm/s)
θ_s: Stepping angle per pulse (degree/pulse)

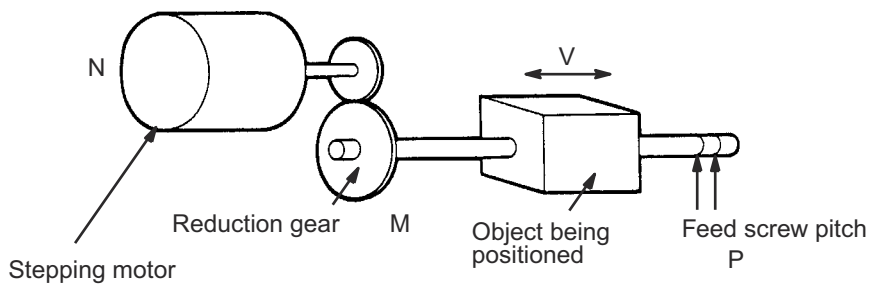

The travel distance per pulse sent to the motor driver is called the "pulse rate" and is calculated according to the following equation:

Pulse rate = P/(pulses per revolution x M)
= P/((360/ θ_s) x M))
= (P x θ_s)/(360 x M)

Using the pulse rate, the number of pulses required to move the object a distance L is given by the following calculation:

No. of pulses = Travel distance ÷ Pulse rate
= L ÷ Pulse rate
= L ÷ (P x θ_s)/(360 x M)
= (360 × M × L)/(P x θ_s)

The pulse speed required to move the object with a feed speed of V mm/s is given by the following calculation:

Pulse speed = Feed speed ÷ Pulse rate
= V ÷ Pulse rate
= V ÷ (P x θ_s)/(360 x M)
= (360 × M × V)/(P x θ_s)

The PCU performs positioning control by providing the number of pulses and the pulse speed in the form of position instructions and speed instructions.

SECTION 2
Basic Procedures

This section gives an overview of the procedures required to use the Position Control Unit.

2-1 Basic Operational Flow 16

2-1 Basic Operational Flow

The following table shows the basic flow of operation for the PCU.

	Flow of operation	Reference
Installation	START Mount the PCU. Set the unit number of the PCU.	*SECTION 3 Installation and Wiring* *3-2 Installation* *3-3 External I/O Circuitry*
Wiring	Connect the PCU to the external input device(s). Connect the motor and the motor driver. (See note 1.) Connect the motor driver and the PCU.	*3-4 Wiring*
---	Turn ON power to the CPU Unit. Create I/O tables for the PC. (See note 2.)	---
Setting the PCU	Set the common parameters for the PCU in the DM Area of the CPU Unit. (See note 3.) When operating according to the axis parameters in the CPU Unit's DM Area. Set the axis parameters for the PCU in the CPU Unit's DM Area. When operating according to the axis parameters saved in the PCU. Set the axis parameters saved in the PCU. Read the axis parameters saved in the PCU. Write the axis parameters to the PCU. Save the written axis parameters in the PCU. Enable the set parameters by either turning the power OFF and ON, or by restarting the PCU. (Continued on next page.)	*SECTION 4 Data Areas* *4-2 Common Parameter Area* *4-3 Axis Parameter Area* *SECTION 5 Transferring and Saving Data* *5-3 Reading Data with the READ DATA Bit* *5-5 Reading Data with IORD* *5-2 Writing Data with the WRITE DATA Bit* *5-4 Writing Data with IOWR* *5-6 Saving Data* *5-7 Transferring Data with CX-Position*

	Flow of operation	Reference
Programming and test operation	(Continued from previous page.) Establish the origin of the motor axis for operation. Directly set the target position and speed from the CPU Unit and start the motor. Record a positioning sequence (including positions and speeds) and operate the motor in accordance with this sequence. Read the sequence data saved in the PCU. Write the sequence data to the PCU. Save the written sequence data in the PCU. Execute other PCU functions, such as jogging or teaching.	*SECTION 6 Defining the Origin* *SECTION 7 Direct Operation* *SECTION 8 Memory Operation* *SECTION 9 Other Operations*
Debugging	Is there an error? Yes No Check the LED indicators on the front of the PCU. Read the PCU's error code. Remove the cause of the error and clear the error status.	*SECTION 11 Troubleshooting*
Operation	Start PC (and PCU) operation.	*SECTION 10 Program Examples*
Maintenance	Perform regular inspections. END	*SECTION 12 Maintenance and Inspection*

Note
1. Perform wiring according to instructions given in the motor and motor driver's operation manuals.
2. Refer to the operation manual for the CPU Unit.
3. Use the axis parameter designation setting in the common parameter area to specify whether for operation is performed according to axis parameters saved in the PCU or the axis parameters set in the CPU Unit's DM Area.

SECTION 3
Installation and Wiring

This section provides information on nomenclature and the function of each part, describes the procedures required for wiring and installation, and gives connection examples. Information on using Servo Relay Units is also provided.

3-1 Nomenclature and Functions 20
3-1-1 Area Allocation. 22
3-2 Installation. 22
3-2-1 System Configuration Considerations 22
3-2-2 Mounting the Unit. 23
3-2-3 Precautions When Handling the PCU. 24
3-2-4 Dimensions 25
3-3 External I/O Circuitry 26
3-3-1 Connector Pin Arrangement 26
3-3-2 External I/O Connector Arrangement. 29
3-3-3 I/O Circuitry 31
3-3-4 I/O Electrical Specifications 34
3-4 Wiring 35
3-4-1 Output Connection Examples 35
3-4-2 Connecting Input Signals 41
3-4-3 Connecting Origin and Positioning Completed Input Signals 42
3-4-4 Wiring Precautions 43
3-5 Connection Examples for Different Types of Motor Driver 45
3-6 Connection of Unused Axes 58
3-6-1 Using Only the X Axis and Not the Y Axis on the CS1W-NC213/NC233 (with Unit Version 2.1 or Later). 58
3-6-2 CS1W-NC213/NC233 – X Axis Only (Unit Versions Earlier Than 2.1) 59
3-7 Servo Relay Unit 59

3-1 Nomenclature and Functions

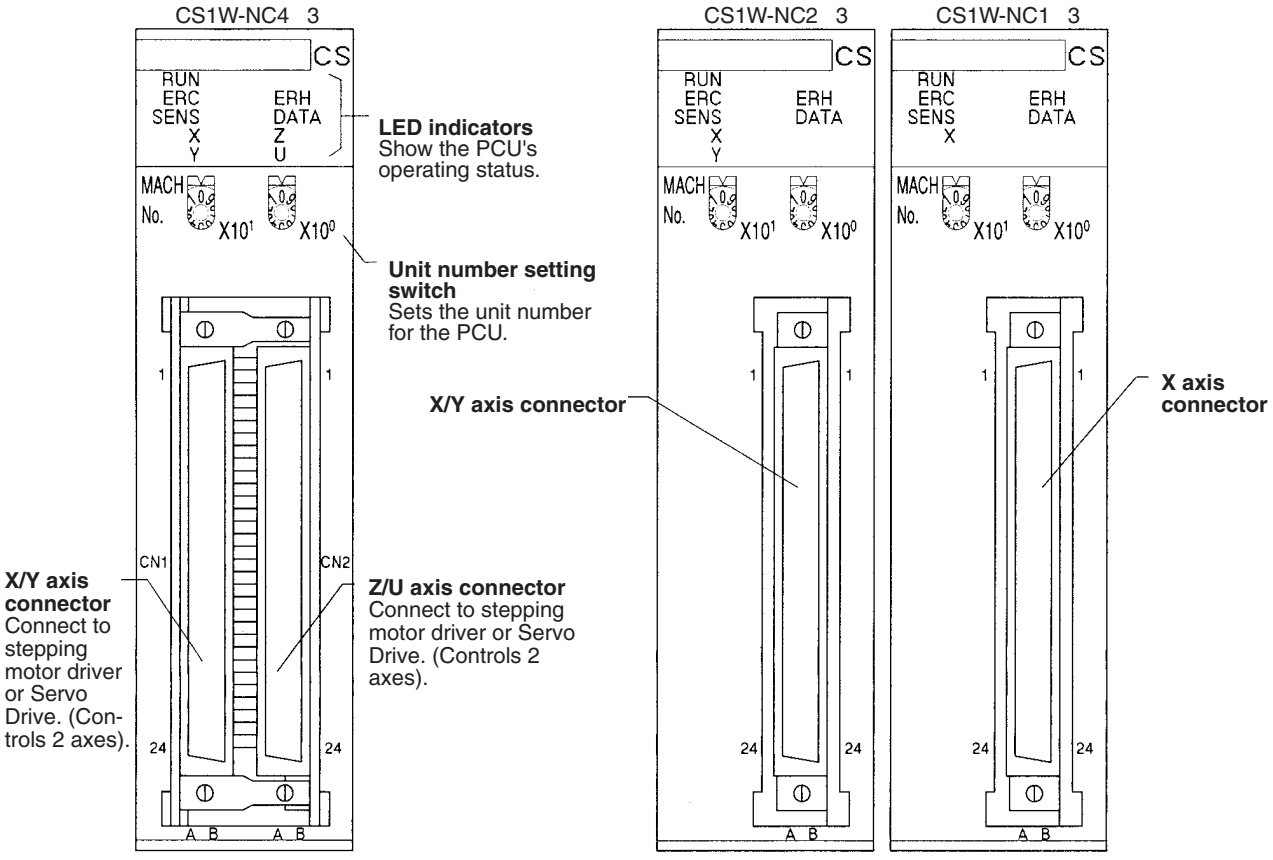

Note The orientation of connectors for 2-axis and 4-axis PCUs is the opposite to that of the C200HW-NC213/413 connectors.

LED Indicators

Name	Color	Status	Explanation
RUN	Green	Lit	Lit during normal operation.
		Not lit	Hardware error, or PLC notified of PCU error.
ERC	Red	Lit	An error has occurred.
		Not lit	No error has occurred.
ERH	Red	Lit	An error has occurred IN the CPU Unit.
		Not lit	No error has occurred at the CPU Unit.
SENS	Yellow	Lit	Either a CW/CCW limit signal or an emergency stop input signal is being input. At this time the LED indicator for the relevant axis (X to U) will flash.
		Flashing	Either a parameter loss, a data loss, or an operating data area designation error has occurred.
		Not lit	None of the above has occurred.
DATA	Yellow	Lit	Data is incorrect (e.g., the parameters or positions transferred are out of the permissible range). At this time the LED indicator for the relevant axis (X to U) will flash.
		Flashing	The check of all data (parameters, positions, etc.) following power up shows that data is lost or corrupted.
		Not lit	None of the above has occurred.
X	Orange	Lit	Pulses are being output to the X axis (either forward or reverse).
		Flashing	An error has occurred, such as incorrect cable type for the X axis or faulty data.
		Not lit	None of the above has occurred.
Y	Orange	Lit	Pulses are being output to the Y axis (either forward or reverse).
		Flashing	An error has occurred, such as incorrect cable type for the Y axis or faulty data.
		Not lit	None of the above has occurred.
Z	Orange	Lit	Pulses are being output to the Z axis (either forward or reverse).
		Flashing	An error has occurred, such as incorrect cable type for the Z axis or faulty data.
		Not lit	None of the above has occurred.
U	Orange	Lit	Pulses are being output to the U axis (either forward or reverse).
		Flashing	An error has occurred, such as incorrect cable type for the U axis or faulty data.
		Not lit	None of the above has occurred.

Note For details regarding errors, refer to *SECTION 11 Troubleshooting*.

- For the CS1W-NC113/NC133, this applies only to the X axis; for the CS1W-NC213/NC233, it applies only to the X and Y axes.
- When not all of the axes are used for the CS1W-NC213/NC233/ NC413/ NC433, either connect the CW/CCW limit inputs for the unused axes to the input power supply and turn them ON or set the contact logic to N.O. Connect the emergency stop to the input common and turn it ON. If it is not connected, the ERC indicator will light. Operation will be normal, however, for all axes that are used.

Unit Number Setting Switch

This switch sets the unit number (i.e., the machine number) for the PCU as a Special I/O Unit.

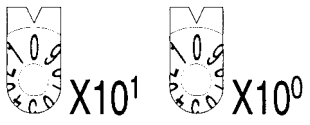

Memory is allocated to the PCU from the CPU Unit's Special I/O Unit Area according to the unit number setting.

CS1W-NC113/NC133/NC213/NC233 models are allocated 10 words and CS1W-NC413/NC433 models are allocated 20 words. The following unit number settings are possible:

- CS1W-NC113/NC133/NC213/NC233: 0 to 95
- CS1W-NC413/NC433: 0 to 94

As long as the unit number settings do not overlap with those of other Special I/O Units, any unit numbers in the ranges given above can be set.

⚠ **Caution** Be sure to turn OFF the power supply before making the settings.

3-1-1 Area Allocation

DM Area for Special I/O Units

CS1W-NC113/NC133/NC213/NC233 PCUs occupy 100 words each and CS1W-NC413/NC433 PCUs occupy 200 words each from D20000 to D29599 in the DM Area as shown below.

CS1W-NC113/NC133/NC213/NC233

Unit #0	D20000 to D20099
Unit #1	D20100 to D20199
Unit #2	D20200 to D20299
Unit #3	D20300 to D20399
:	:
Unit #93	D29300 to D29399
Unit #94	D29400 to D29499
Unit #95	D29500 to D29599

CS1W-NC413/NC433

Unit #0	D20000 to D20199
Unit #1	D20100 to D20299
Unit #2	D20300 to D20399
Unit #3	D20400 to D20499
:	:
Unit #93	D29300 to D29499
Unit #94	D29400 to D29599
Unit #95	Setting not possible.

Word address	Contents	
m to m+3	Common parameters	
m+4 to m+31	Axis parameters	For X axis
m+32 to m+59		For Y axis
m+60 to m+87		For Z axis
m+88 to m+115		For U axis

m: D20000+100 x unit number

Special I/O Unit Area

CS1W-NC113/NC133/NC213/NC233 PCUs occupy 10 words, and CS1W-NC413/NC433 PCUs occupy 20 words in the Special I/O Unit Area.

CS1W-NC113/NC133/NC213/NC233

Unit #0	CIO 2000 to CIO 2009
Unit #1	CIO 2010 to CIO 2019
Unit #2	CIO 2020 to CIO 2029
Unit #3	CIO 2030 to CIO 2039
:	:
Unit #93	CIO 2930 to CIO 2939
Unit #94	CIO 2940 to CIO 2949
Unit #95	CIO 2950 to CIO 2959

CS1W-NC113/NC133

I/O	Word address	Axis
Output	n to n+1	X axis
Input	n+2 to n+4	X axis

CS1W-NC213/NC233

I/O	Word address	Axis
Output	n to n+1	X axis
	n+2 to n+3	Y axis
Input	n+4 to n+6	X axis
	n+7 to n+9	Y axis

n: CIO 2000+10 x unit number

CS1W-NC413/NC433

Unit #0	CIO 2000 to CIO 2019
Unit #1	CIO 2010 to CIO 2029
Unit #2	CIO 2020 to CIO 2039
Unit #3	CIO 2030 to CIO 2049
:	:
Unit #93	CIO 2930 to CIO 2949
Unit #94	CIO 2940 to CIO 2959
Unit #95	Setting not possible.

CS1W-NC413/NC433

I/O	Word address	Axis
Output	n to n+1	X axis
	n+2 to n+3	Y axis
	n+4 to n+5	Z axis
	n+6 to n+7	U axis
Input	n+8 to n+10	X axis
	n+11 to n+13	Y axis
	n+14 to n+16	Z axis
	n+17 to n+19	U axis

Note

1. The CS1W-NC413/NC433 occupies the space for two unit numbers, i.e., the unit number that is set and also the following number.
2. Be sure to set the unit numbers so that they do not overlap with the unit numbers of other Special I/O Units.
3. Since the CS1W-NC413/433 occupies the space for two unit numbers, unit number 95 cannot be set.

3-2 Installation

3-2-1 System Configuration Considerations

- The additional functions supported by Unit version 2.0 can be used only when the PCU is installed with a CS1-H CPU Unit (either CPU Unit Ver. 2.0 or Pre-Ver. 2.0 CPU Unit). These functions cannot be used if the PCU is installed with a CS1 CPU Unit (with -V1 suffix).
  For details on Unit versions, refer to *Unit Versions of CS-series Position*

Control Units on page vi. For details on additional functions supported for unit version 2.0, refer to *Unit Versions of CS-series Position Control Units* on page vi.

- The I/O bits allocated to a particular Special I/O Unit are determined by the unit number that is set by the switch on the front panel of the Unit, and not by the slot in which the Unit is mounted.
- The PCU can be mounted to CS1W-BC□□3 CPU Backplanes or CS1W-BI□□3 Expansion Backplanes.

3-2-2 Mounting the Unit

Follow the procedure outlined below to mount the Position Control Unit.

1,2,3... 1. Hook the top of the PCU into the slot in the Backplane.

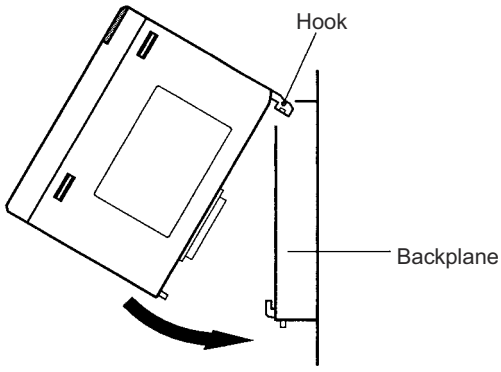

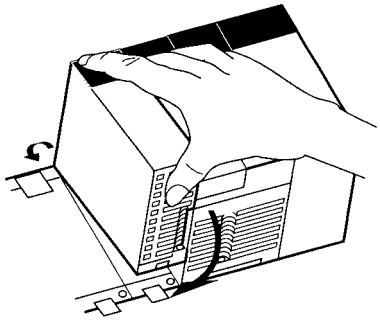

2. Carefully insert the PCU into the connector on the Backplane.
3. Tighten the screw on the bottom with a Phillips-head screwdriver. Provide enough space around the PCU to enable easy mounting and dismounting, and to ensure good ventilation as shown below.

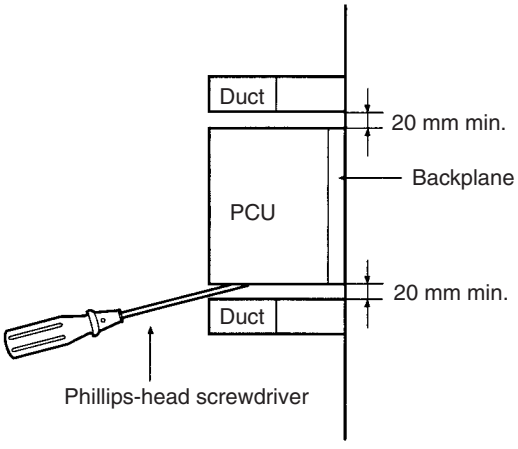

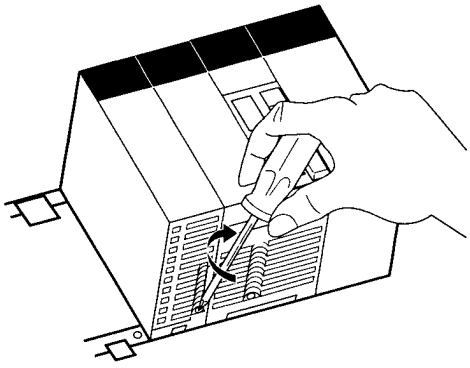

Note Tighten the screw at the bottom of the PCU to a torque of 0.4 N•m.

4. To remove the PCU, use a Phillips-head screwdriver to loosen the screw at the bottom of the PCU, and rotate the PCU upwards before dismounting.

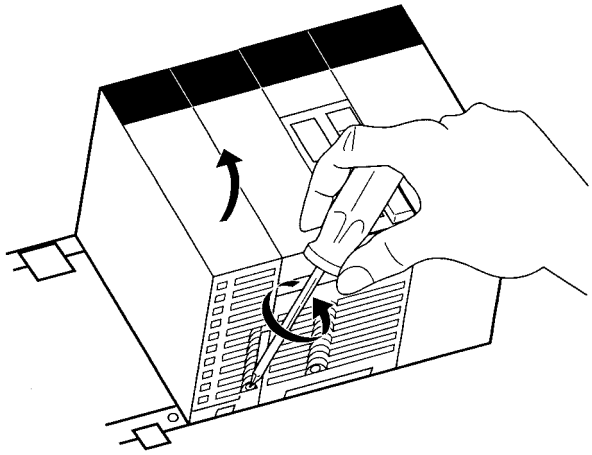

3-2-3 Precautions When Handling the PCU

- Before installing or disconnecting the PCU or connecting cable, be sure to first turn off both the Programmable Controller and the power supply.
- To minimize any influence from noise, place I/O wiring, high-voltage lines, and power lines in separate ducts.
- Wire clippings tend to get scattered around during wiring, so leave the label in place on top of the PCU to prevent any clippings from getting inside the PCU. Once the wiring has been completed, be sure to remove the label to provide ventilation.

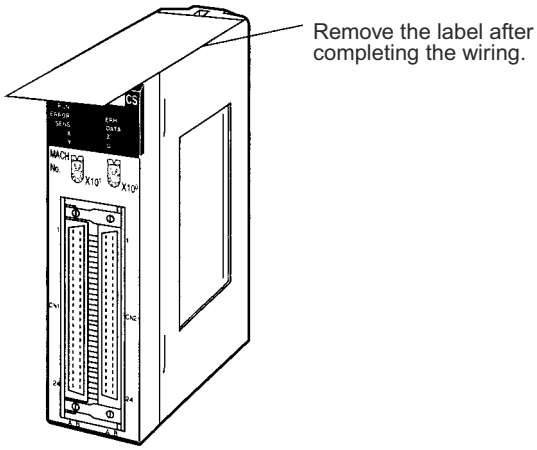

3-2-4 Dimensions

CS1W-NC113/NC133/NC213/NC233/NC413/NC433

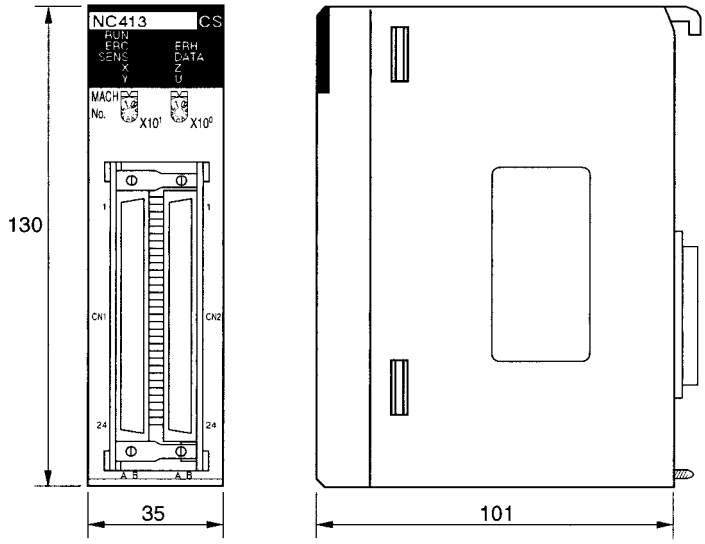

Note The above diagram is for the CS1W-NC413.

Mounted Dimensions

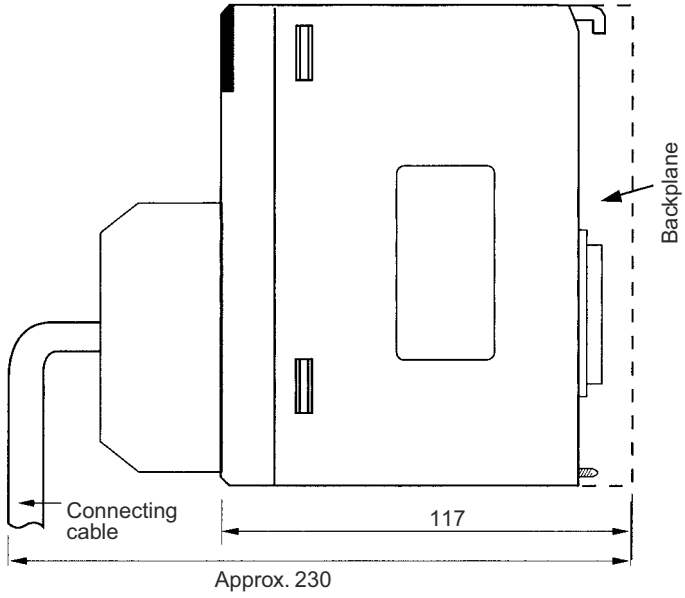

3-3 External I/O Circuitry

3-3-1 Connector Pin Arrangement

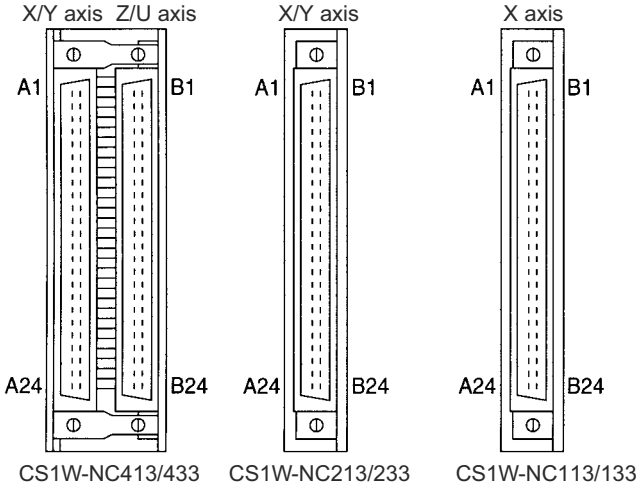

CS1W-NC113/213/413 (Pulse Open Collector Output)

Connector pin arrangement for X and Z axes			Connector pin arrangement for Y and U axes		
Pin No.	**I/O**	**Designation**	**Pin No.**	**I/O**	**Designation**
A1	IN	Output power supply, 24 VDC	B1	IN	Output power supply, 24 VDC
A2	IN	Output GND, 24 VDC	B2	IN	Output GND, 24 VDC
A3	---	Not used	B3	---	Not used
A4	---	Not used	B4	---	Not used
A5	OUT	CW pulse output	B5	OUT	CW pulse output
A6	OUT	CW pulse output with 1.6-kΩ resistance	B6	OUT	CW pulse output with 1.6-kΩ resistance
A7	OUT	CCW pulse/direction output	B7	OUT	CCW pulse/direction output
A8	OUT	CCW pulse/direction output with 1.6-kΩ resistance	B8	OUT	CCW pulse/direction output with 1.6-kΩ resistance
A9	---	Not used	B9	---	Not used
A10	OUT	Error counter reset output/origin-adjustment command output	B10	OUT	Error counter reset output/origin-adjustment command output
A11	OUT	Error counter reset output with 1.6-kΩ resistance Origin-adjustment command output with 1.6-kΩ resistance	B11	OUT	Error counter reset output with 1.6-kΩ resistance Origin-adjustment command output with 1.6-kΩ resistance
A12	IN	Positioning completed input signal	B12	IN	Positioning completed input signal
A13	---	Not used	B13	---	Not used
A14	IN	Origin common	B14	IN	Origin common
A15	IN	Origin input signal (24 V)	B15	IN	Origin input signal (24 V)
A16	IN	Origin input signal (5 V)	B16	IN	Origin input signal (5 V)
A17	---	Not used	B17	---	Not used
A18	---	Not used	B18	---	Not used
A19	IN	Interrupt input signal	B19	IN	Interrupt input signal
A20	IN	Emergency stop input signal	B20	IN	Emergency stop input signal
A21	IN	Origin proximity input signal	B21	IN	Origin proximity input signal
A22	IN	CW limit input signal	B22	IN	CW limit input signal
A23	IN	CCW limit input signal	B23	IN	CCW limit input signal
A24	IN	Input common	B24	IN	Input common

CS1W-NC133/233/433 (Line Driver Output)

Connector pin arrangement for X and Z axes			Connector pin arrangement for Y and U axes		
Pin No.	I/O	Designation	Pin No.	I/O	Designation
A1	IN	Output power supply, 24 VDC	B1	IN	Output power supply, 24 VDC
A2	IN	Output GND, 24 VDC	B2	IN	Output GND, 24 VDC
A3	IN	Pulse output GND, 5 VDC*	B3	IN	Pulse output GND, 5 VDC*
A4	IN	Pulse output power supply, 5 VDC*	B4	IN	Pulse output power supply, 5 VDC*
A5	OUT	CW pulse output (+)	B5	OUT	CW pulse output (+)
A6	OUT	CW pulse output (–)	B6	OUT	CW pulse output (–)
A7	OUT	CCW pulse/direction output (+)	B7	OUT	CCW pulse/direction output (+)
A8	OUT	CCW pulse/direction output (–)	B8	OUT	CCW pulse/direction output (–)
A9	---	Not used	B9	---	Not used
A10	OUT	Error counter reset output/origin-adjustment command output	B10	OUT	Error counter reset output/origin-adjustment command output
A11	OUT	Error counter reset output with 1.6-kΩ resistance Origin-adjustment command output with 1.6-kΩ resistance	B11	OUT	Error counter reset output with 1.6-kΩ resistance Origin-adjustment command output with 1.6-kΩ resistance
A12	IN	Positioning completed input signal	B12	IN	Positioning completed input signal
A13	---	Not used	B13	---	Not used
A14	IN	Origin common	B14	IN	Origin common
A15	IN	Origin input signal (24 V)	B15	IN	Origin input signal (24 V)
A16	IN	Origin input signal (5 V)	B16	IN	Origin input signal (5 V)
A17	---	Not used	B17	---	Not used
A18	---	Not used	B18	---	Not used
A19	IN	Interrupt input signal	B19	IN	Interrupt input signal
A20	IN	Emergency stop input signal	B20	IN	Emergency stop input signal
A21	IN	Origin proximity input signal	B21	IN	Origin proximity input signal
A22	IN	CW limit input signal	B22	IN	CW limit input signal
A23	IN	CCW limit input signal	B23	IN	CCW limit input signal
A24	IN	Input common	B24	IN	Input common

* Be sure to wire the 5-VDC pulse output power supply with the correct polarity.

Note

1. Use either the 24-V origin input signal or the 5-V origin input signal, but not both.
2. Use 24 ±10% VDC as the output power supply.
3. Use 5 ±5% VDC as the output power supply.
4. Do not use the 24-VDC output power supply or the 5-VDC pulse output power supply together with the power supply for another input or output.
5. Be sure to wire the 5-VDC pulse output power supply with the correct polarity. Wiring with the polarity reversed will result in damage to internal elements.
6. The leakage current must be less than 1.0 mA when two-wire-type sensors are used.
7. Be sure to connect a load to the output terminals. If the load is short-circuited, it will damage the PCU's internal components.
8. The 24-V output power supply (A1 and B1) and the 24-V output ground (A2 and B2) for all axes are connected in the PCU, and are shared by all axes.
9. The 5-V pulse output power supply (A4 and B4) and the 5-V pulse output ground (A3 and B3) for all axes are connected in the PCU, and are shared by all axes.

10. When installing connectors to the PCU, tighten the connector screws to a torque of 0.34 N·m.
    - The commons for all outputs are connected to the 24-V output ground.
    - The commons for all inputs except for the 24-V and 5-V origin input signals and positioning completed input signals are connected to the input common.
    - The common for the positioning completed input signal is connected to the 24-V output power supply via a diode.
    - Use the origin common as a pair with the 24-V origin input signal or the 5-V origin input signal.

3-3-2 External I/O Connector Arrangement

- The connectors that are included with this PCU are solder-type connectors.
- Use wires with cross-sectional areas of 0.2 mm^2 or less.
- Be careful not to short-circuit neighboring terminals when soldering.
- Cover the soldered part of the wire with insulation tubing.

Wiring Power Lines

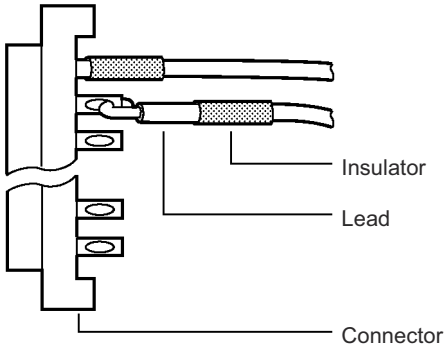

Connector Pin Numbers

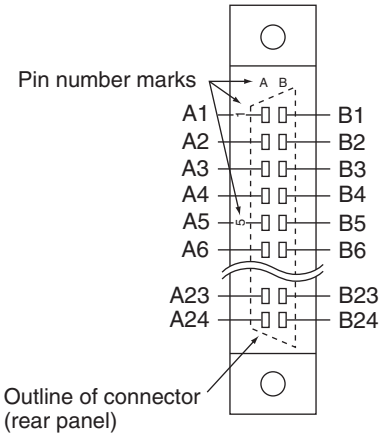

(Connector viewed from unit side.)

Assembling Connectors Supplied with the PCU

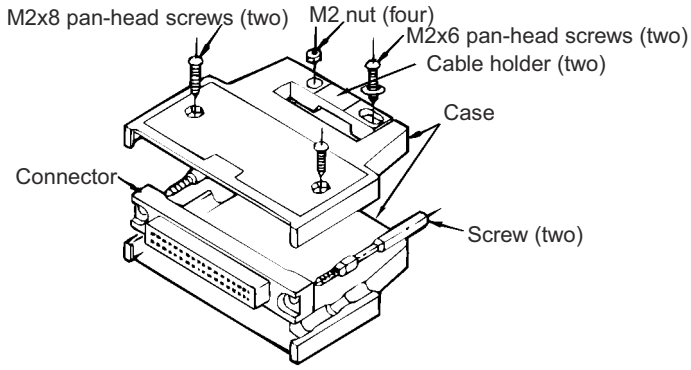

The following connectors (Fujitsu 360 Jack) can be used:

1,2,3...

1. FCN-361J048-AU (solder-type)
   FCN-360C048-D (connector cover)
2. FCN-363J048 (crimp-type housing)
   FCN-363J-AU/S (contact)
   FCN-360C048-D (connector cover)
3. FCN-367J048-AU (crimp type)

Cover Dimensions

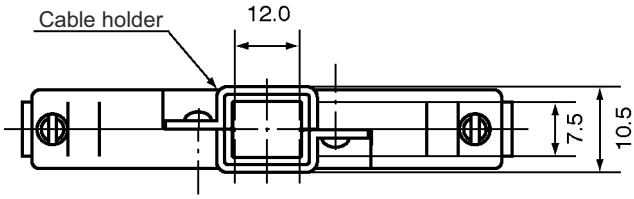

3-3-3 I/O Circuitry

Outputs (Open Collector Output)

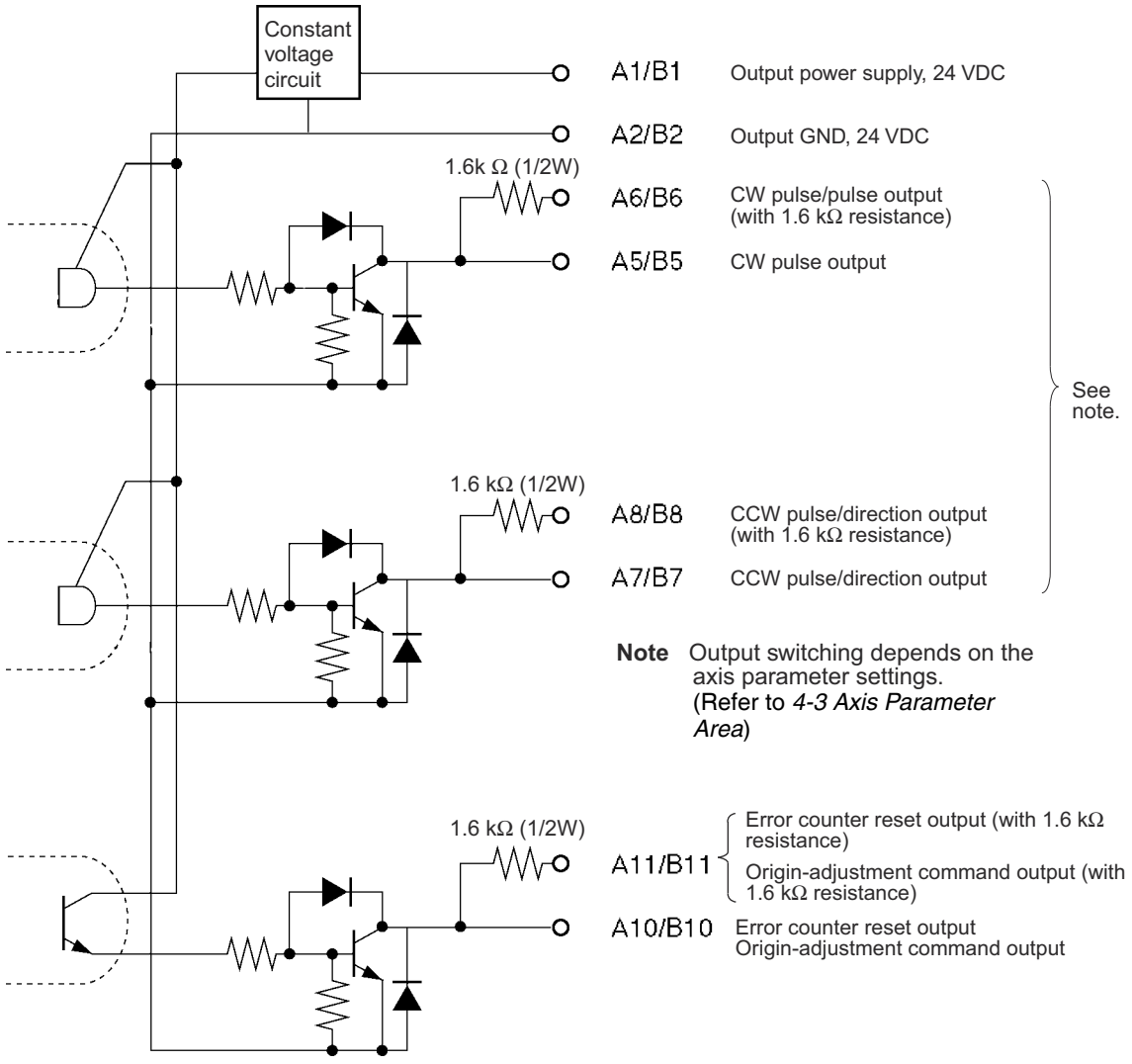

Note **Output Circuits:**
The pulse output and error counter reset circuitry of the PCU are provided with two types of terminals: terminals with 1.6 kΩ (1/2 W) limit resistance and terminals with no resistance. Select the terminals in accordance with the power requirements and the specifications of the motor driver to be used.

⚠ **Caution** Connect a load of 7 to 30 mA (or 7 to 16 mA for terminals with 1.6-kΩ limit resistance) to the output section. If a current greater than this is used, it will cause damage to the PCU's internal components. Also, be sure to use the CW/CCW output method when using pulse output terminals with limit resistance.

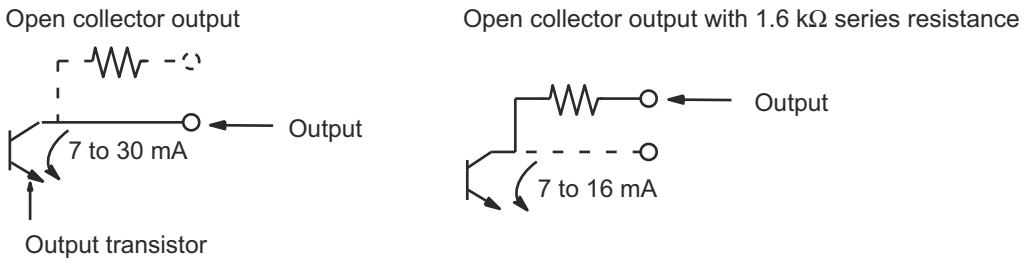

Add bypass resistance for loads less than 7 mA.

(Circuit example)

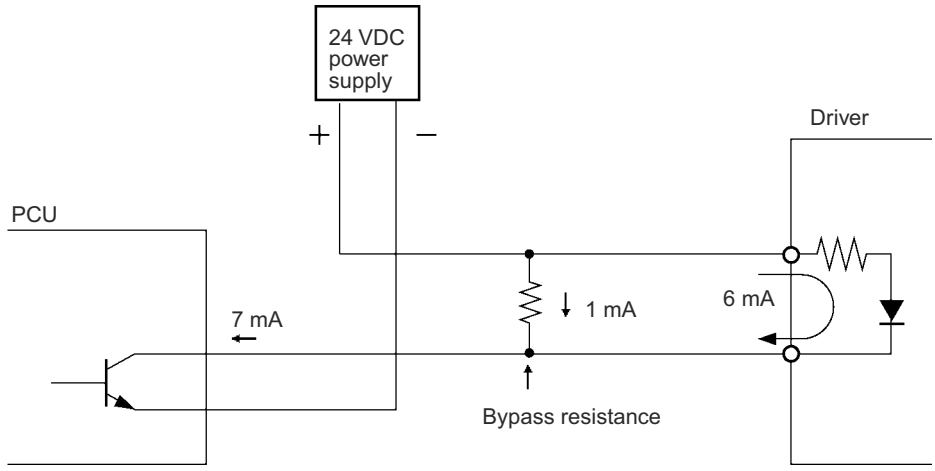

Outputs (Line Driver Output)

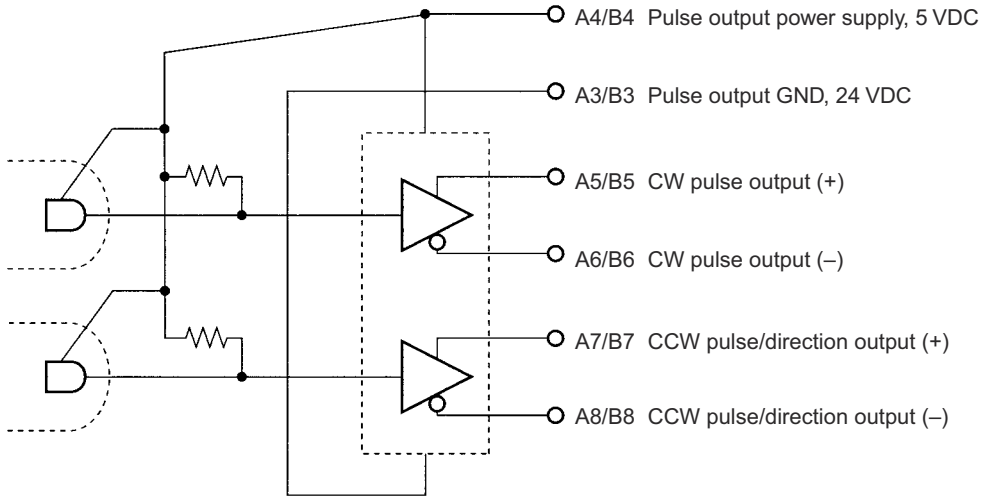

Note Error counter reset output is open collector output.

⚠ **Caution** Connect a load of 20 mA max. to the output section. If a current greater than this is used, it will cause damage to the PCU's internal components.

⚠ **Caution** Be sure to wire the 5-VDC pulse output power supply with the correct polarity. Wiring with the polarity reversed will result in damage to internal elements.

Inputs

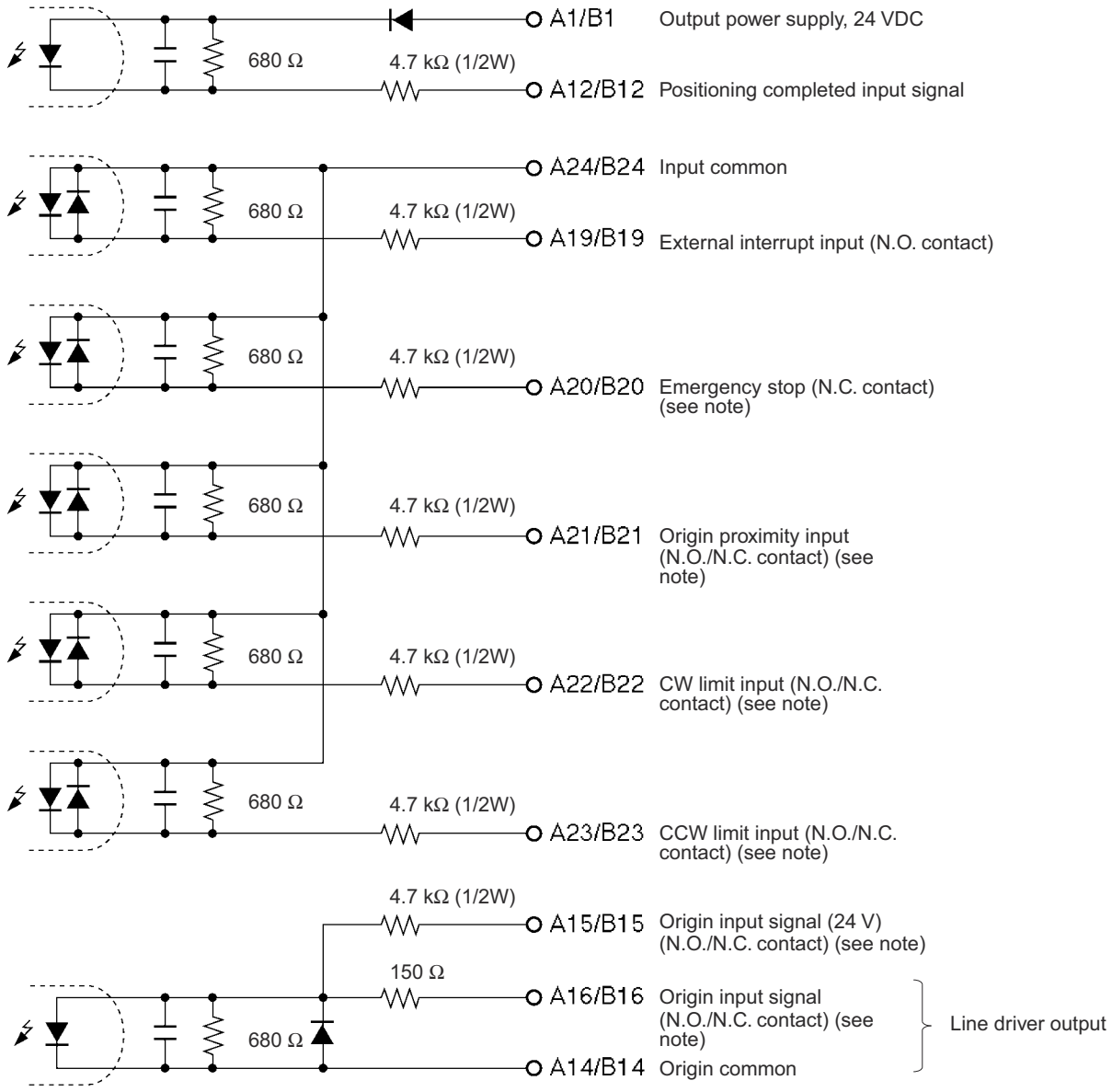

For details on connecting origin input signals, refer to 42.

⚠ **Caution** Use either the 24-VDC origin input signal or the 5-VDC origin input signal, but not both. If both are connected it will damage the internal circuitry.
Do not connect the 5-VDC origin input signal input to any output circuit except the line driver.

3-3-4 I/O Electrical Specifications

Input Specifications

Item	Specification
Voltage	24 VDC ±10%
Current	4.66 to 5.15 mA (at 24 V) typ.
ON voltage	17 VDC min.
OFF voltage	5.0 VDC max.
ON response time	1 ms max. (0.1 ms max.: Interrupt input and origin input)
OFF response time	1 ms max.

Origin-signal Input Specifications

Item	Connection Terminal		Specification	Response Time
External signal is open collector signal	X/Z Axis	A15 A14	Conform to above input specifications	N.O. contact: 0.1 ms max. N.C. contact: 1 ms max.
	Y/U Axis	B15 B14		
External signal is line driver signal	X/Z Axis	A16 A14	Signal is a line driver output signal corresponding to Am26LS31	N.O. contact: 0.1 ms max. N.C. contact: 1 ms max.
	Y/U Axis	B16 B14		

Output Specifications

Item		Specification
Open collector output	Maximum switching capacity	30 mA at 4.75 to 26.4 VDC (NPN open collector) (16 mA: Terminals with 1.6-kΩ limit resistance)
	Minimum switching capacity	7 mA at 4.75 to 26.4 VDC (NPN open collector)
	Leakage current	0.1 mA max.
	Residual voltage	0.6 V max. (pulse output) 1.0 V max. (error counter reset output)
Line driver output		Corresponds to Am26LS31. Maximum output current: 20 mA
External power supply		24 VDC ±10% NC413: 90 mA max. NC213: 50 mA max. NC113: 30 mA max. NC433: 30 mA max. NC233: 20 mA max. NC133: 10 mA max. 5 VDC±5% NC433: 220 mA max. NC233: 120 mA max. NC133: 60 mA max.

CW/CCW Pulse Output Specifications (Open Collector Output)

The minimum CW/CCW pulse widths are shown below.
The OFF and ON refer to the output transistor.
The output transistor is ON at level “L.”

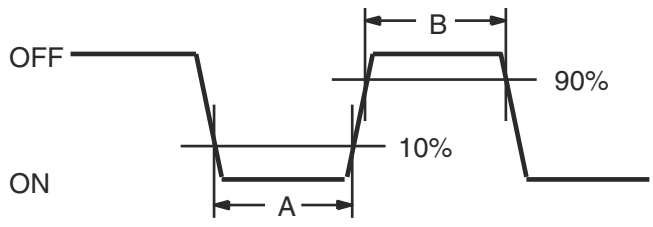

Pulse frequency	Open or close current / Loaded power-source voltage							
	7 mA/5 VDC±5%		30 mA/5 VDC±5%		7 mA/24 VDC±10% (1.6-kΩ resistance)		16 mA/24 VDC±10% (1.6-kΩ resistance)	
	A	B	A	B	A	B	A	B
50 Kpps	9.7 μs min.	9.7 μs min.	9.8 μs min.	9.8 μs min.	9.7 μs min.	9.7 μs min.	9.7 μs min.	9.7 μs min.
100 Kpps	4.7 μs min.	4.7 μs min.	4.8 μs min.	4.8 μs min.	4.7 μs min.	4.7 μs min.	4.8 μs min.	4.8 μs min.
200 Kpps	2.3 μs min.	2.3 μs min.	2.3 μs min.	2.3 μs min.	2.2 μs min.	2.2 μs min.	2.3 μs min.	2.3 μs min.
500 Kpps	0.76 μs min.	0.82 μs min.	0.77 μs min.	0.88 μs min.	0.74 μs min.	0.72 μs min.	0.76 μs min.	0.85 μs min.

Note
1. The load in the above table is the net resistance load, and the connecting cable impedance with the load is not considered.
2. Due to distortions in pulse waveforms as a result of connecting cable impedance, pulse widths during actual usage may be smaller than those shown in the above table.

3-4 Wiring

This section provides motor driver connection examples. When actually connecting a motor driver, be sure to first check the specifications of the motor driver to be used.

The maximum length of the wiring between the PCU and the motor driver is 2 m for open collector output models and 5 m for line driver output models.

3-4-1 Output Connection Examples

Pulses are not output when the output transistor in the pulse output section is OFF. (For direction output, OFF indicates CCW.)

Do not use a 24-VDC/5-VDC power supply for pulse output in common with the power supply for other I/O.

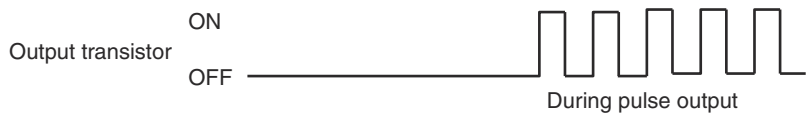

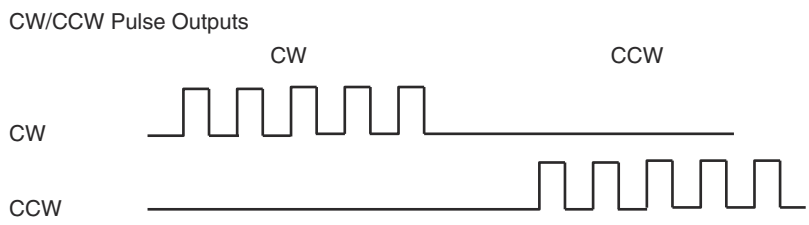

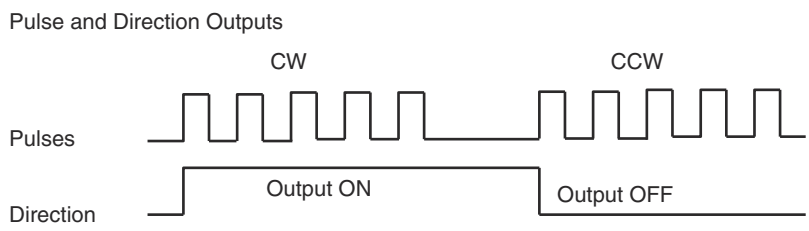

Outputting CW and CCW Pulses, Example 1

In this example, a 5-VDC photocoupler input motor driver is used for outputting CW and CCW pulses.

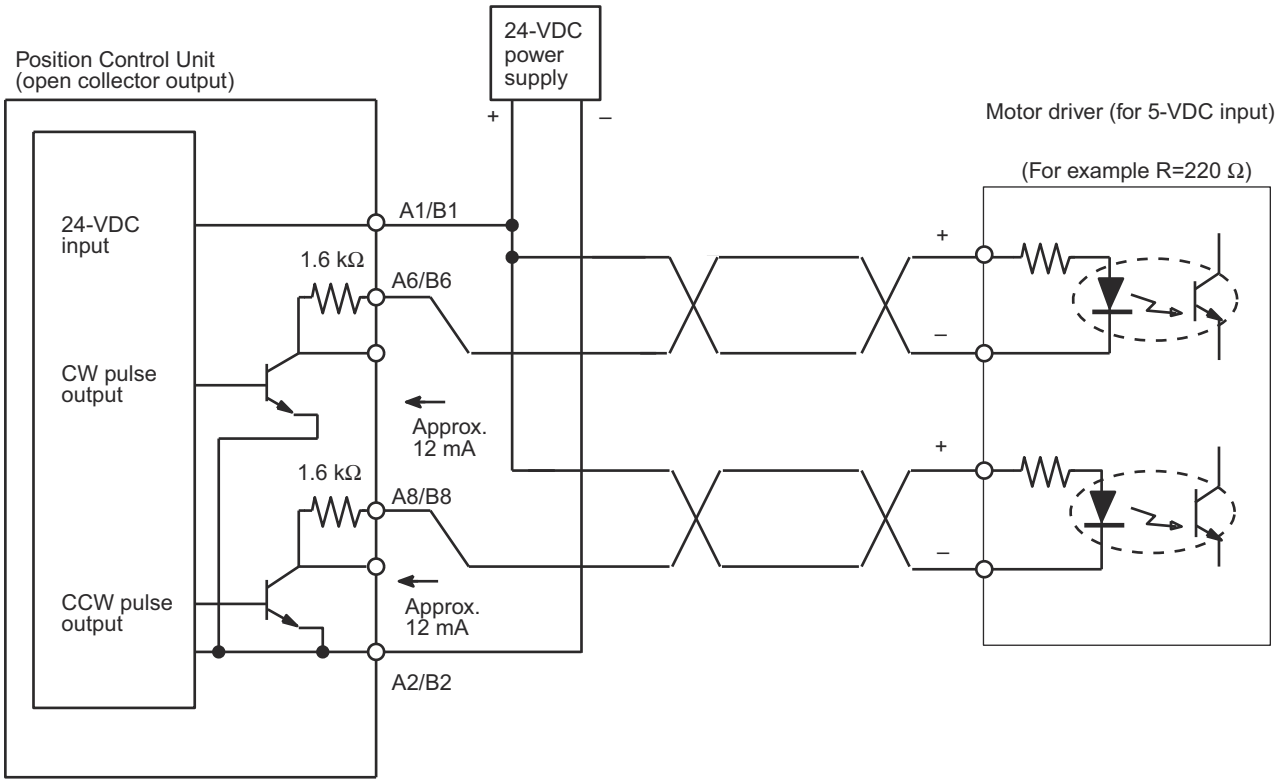

Note In this example, the 1.6 kΩ resistors of the PCU are used to allow a 24-VDC power supply to be used with a motor driver rated at 5 VDC.
When wiring your system, carefully note the current required by the motor driver in order to avoid damaging the input circuitry of the motor driver.

Outputting CW and CCW Pulses, Example2

In this example, a 5-VDC photocoupler input motor driver is used for outputting CW and CCW pulses.

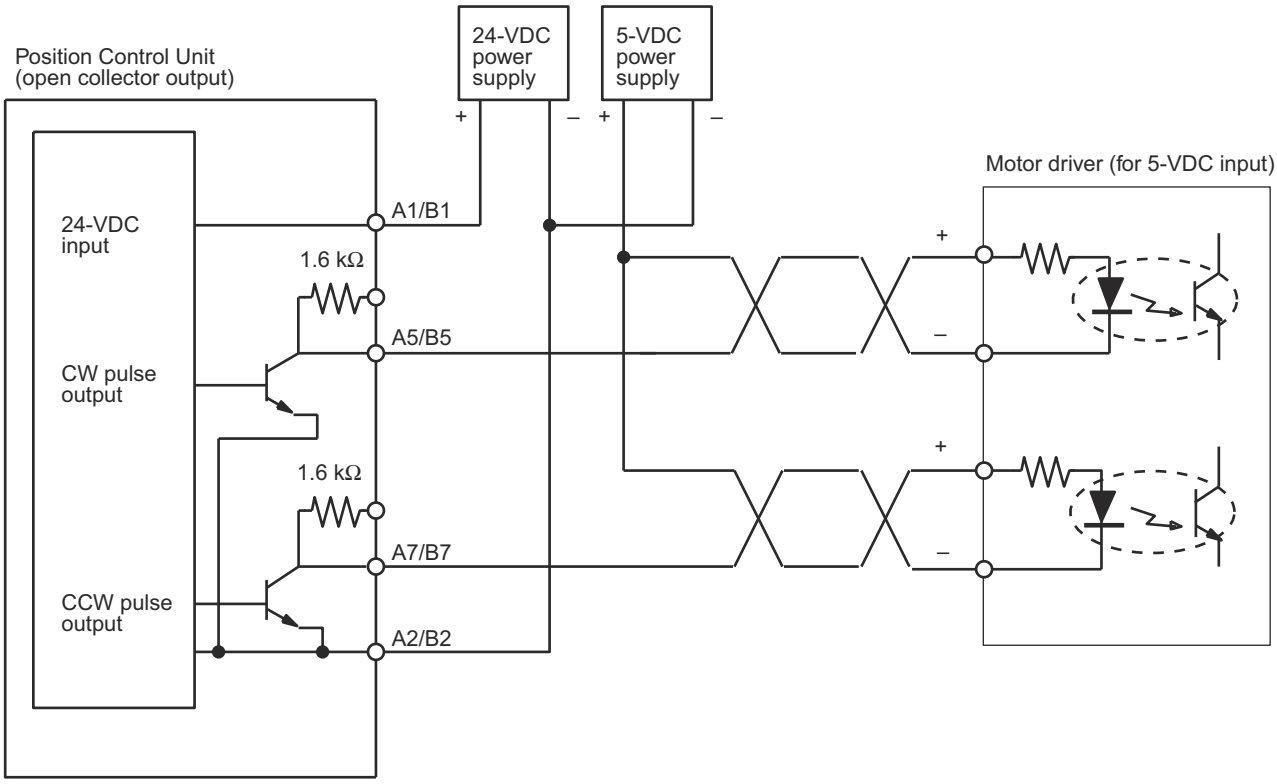

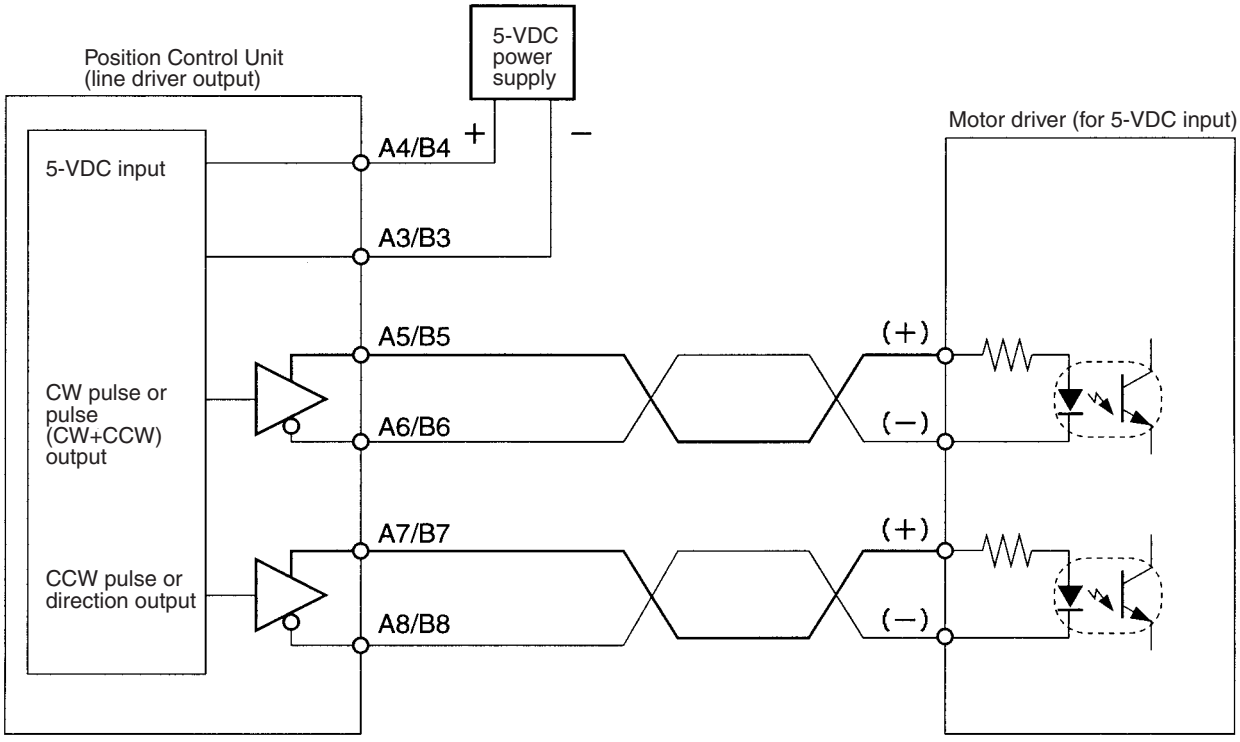

Outputting Pulse and Direction Signals

In this example, a 5-VDC input motor driver is used for outputting pulse and direction signals.

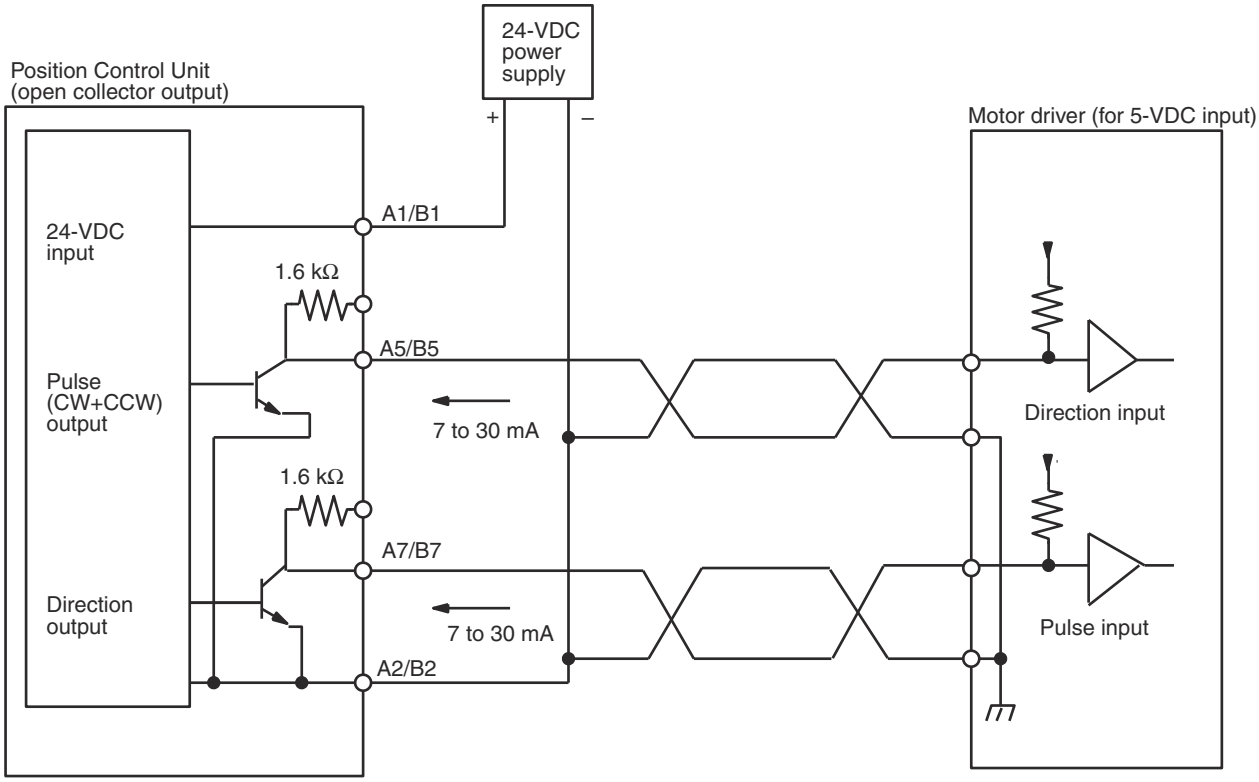

When voltage-level output is used, the level is L for output ON, and H for output OFF.

Outputting CW and CCW Pulses or Pulse and Direction Signals

In this example, a motor driver with a line receiver input is used and either CW and CCW pulses or pulse and direction signals are output.

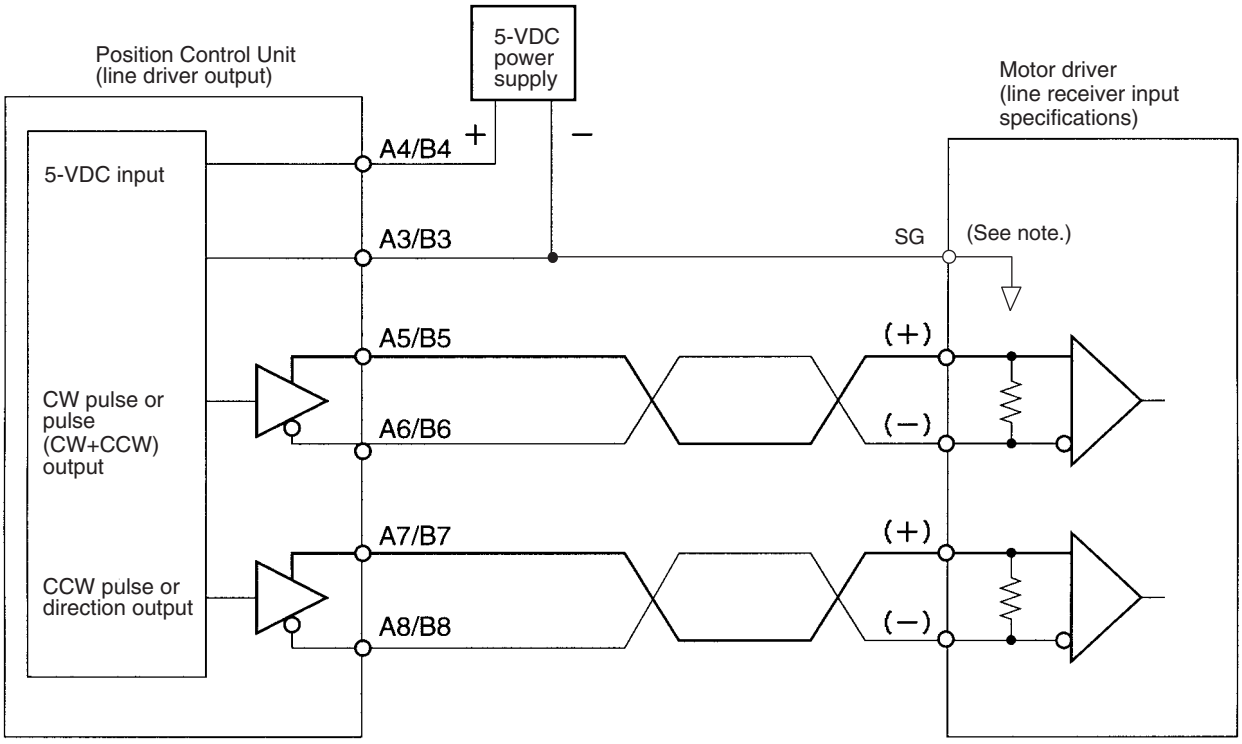

Note: When connecting a line receiver, connect the signal ground (SG) of the motor driver's line receiver input to the ground (GND) of the 5-VDC power supply.

⚠ **Caution** Be sure to wire the 5-VDC pulse output power supply with the correct polarity. Wiring with the polarity reversed will result in damage to internal elements.

Error Counter Reset Output

There is approximately 20 ms of output when origin search is completed in modes 1 or 2.

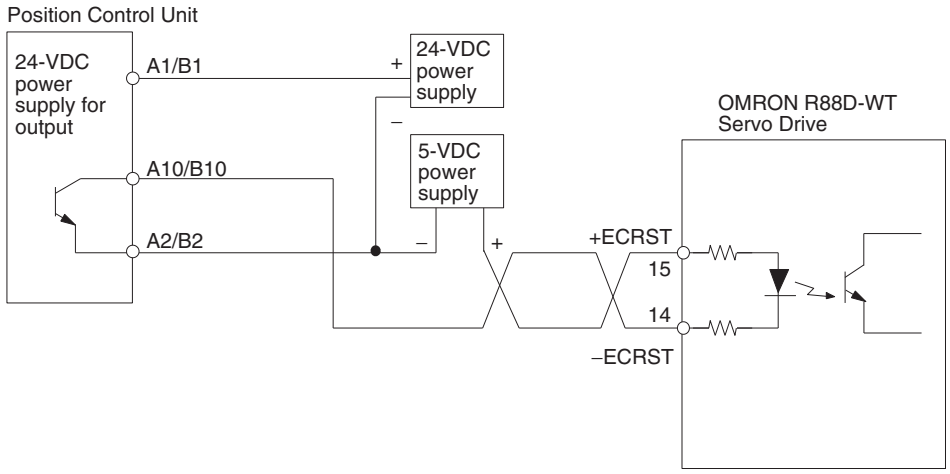

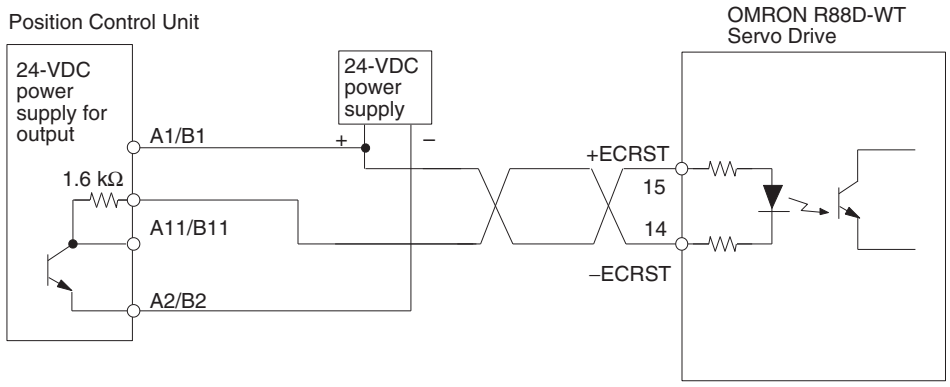

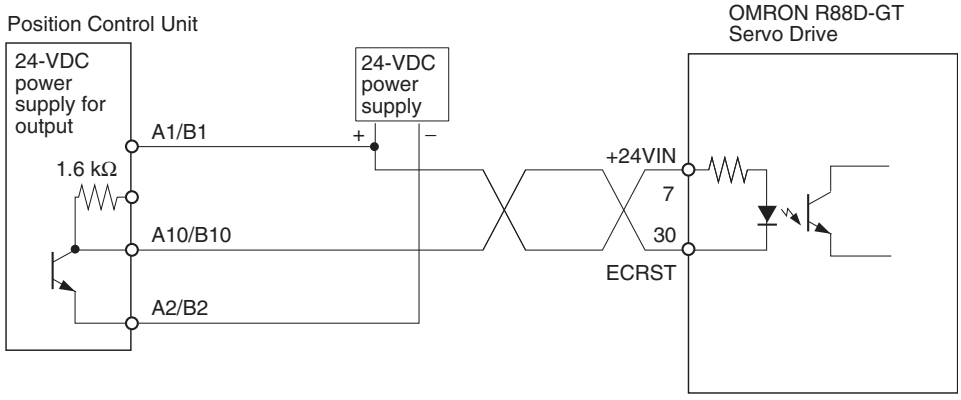

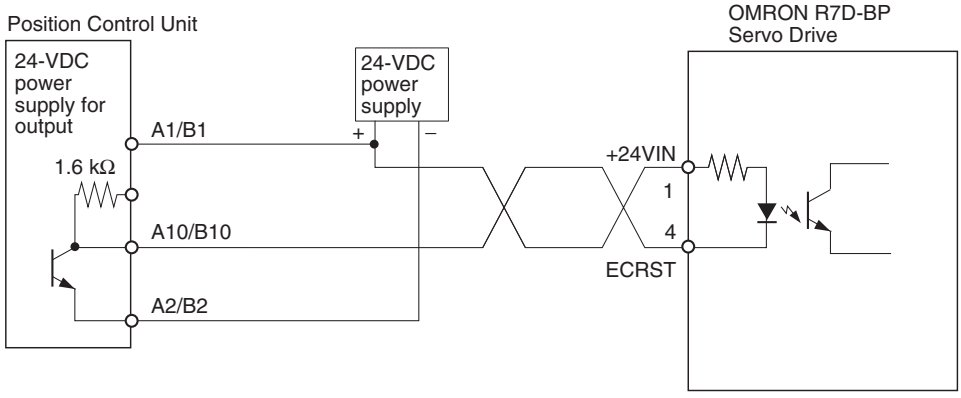

3-4-2 Connecting Input Signals

⚠ **Caution** If the switching capacity is too low it may cause damage to the switch. Connect a switch with a switching capacity of at least 5 mA for each input.

With N.C. inputs, be sure to connect a power supply for unused terminals and turn them on.

This section shows examples of connecting interrupt, emergency stop, and CW/CCW limit input signals.

The input section has both N.O. and N.C. inputs. Either can be used depending on the axis parameter settings. For details regarding axis parameters, refer to *4-3 Axis Parameter Area*.

Depending on the setting of the origin search operation pattern, the point at which the origin proximity signal or the CW/CCW limit signal changes from ON to OFF is used as the timing for origin signal detection. In this case, use a sensor with no chattering, such as a photoelectric sensor, for the input. Using a switch with contacts may cause the position of the origin to be displaced due to chattering. For details on setting operation patterns for origin searches, refer to 151.

Name	Connection type
External interrupt input signal	N.O.
Emergency stop input signal	N.C.
Origin proximity input signal	N.C. or N.O.
CW limit input signal	N.C. or N.O.
CCW limit input signal	N.C. or N.O.

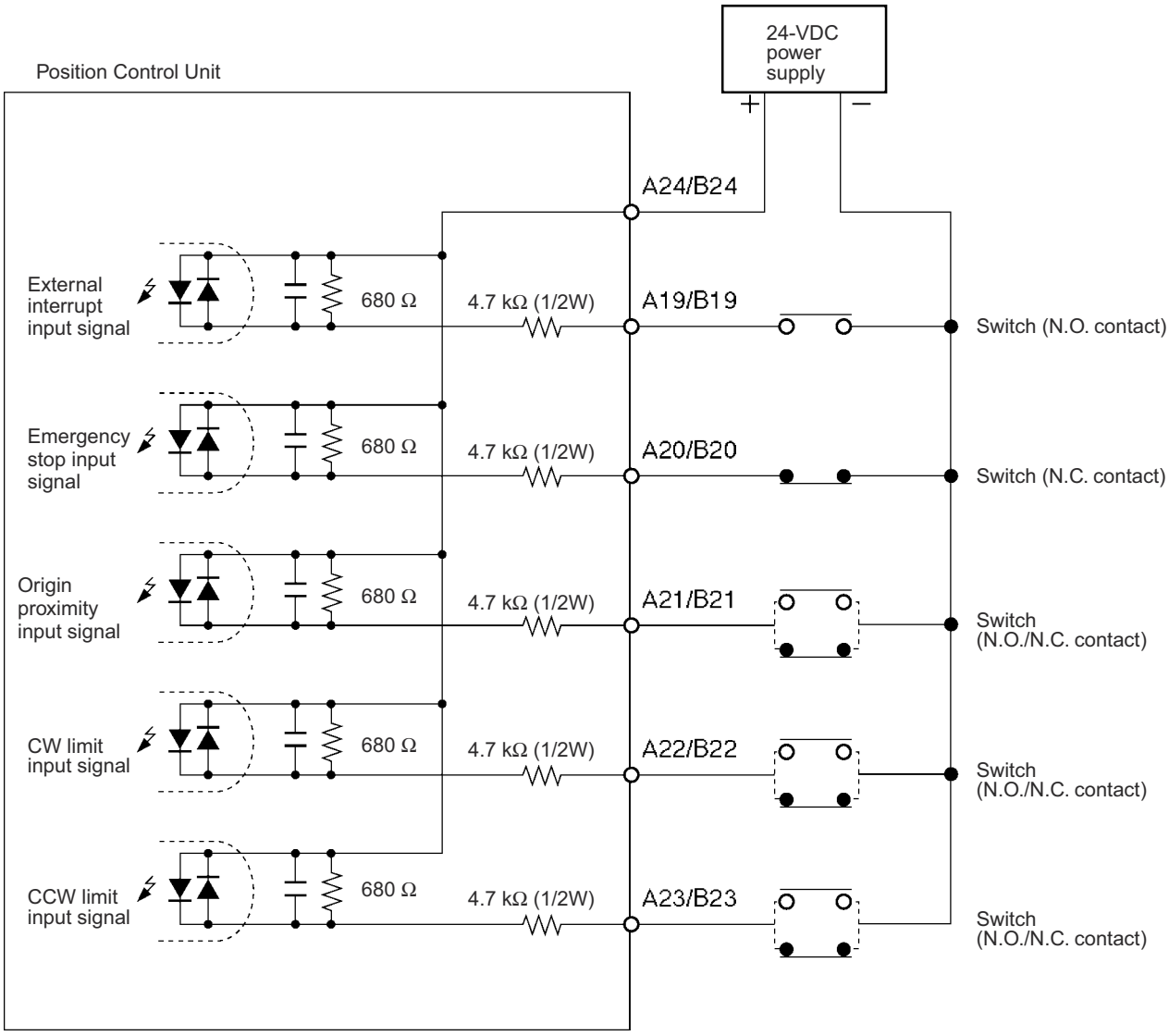

3-4-3 Connecting Origin and Positioning Completed Input Signals

The examples below show input connections when open collector sensor output and the encoder's Z-phase line driver output are used.

Use a sensor with no chattering, such as a photoelectric sensor, for the origin input signal.

⚠ **Caution** Connect a switch with a switching capacity of at least 5 mA to the 24-V origin input signal terminal.

⚠ **Caution** Do not connect the 5-VDC origin input signal input to any output circuit except the line driver.

⚠ **Caution** Use either the 24-V origin input signal or the 5-V origin input signal, but not both. Also, be sure not to connect them to the wrong terminal. Using both signals or connecting them to the wrong terminal will result in damage to internal circuitry.

Origin Input Signal (24 V)

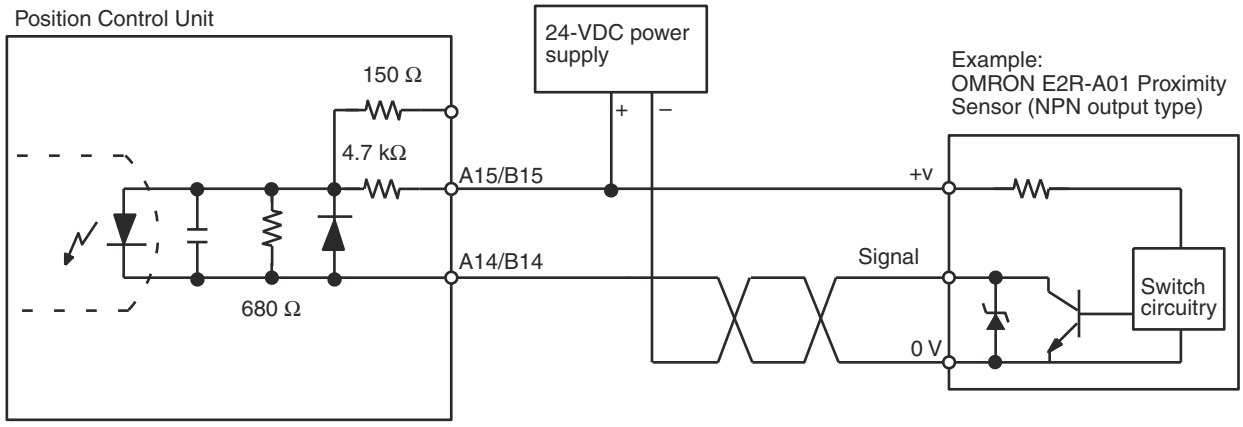

Origin Input Signal (5 V) (Line Driver Input)

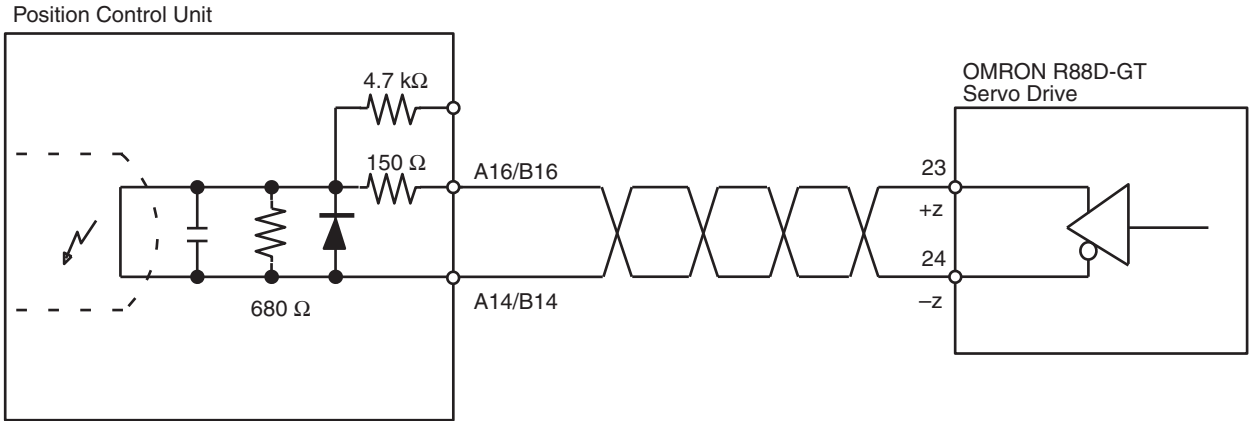

Positioning Completed Input Signal

The positioning completed input signal is also used as an origin search completed signal in modes 2 and 3. Adjust the setting of the Servo Drive so that this signal always turns off while the servomotor is operating, and on when the motor is stopped.

An origin search operation cannot be completed unless the positioning completed input signal turns ON after positioning has been completed.

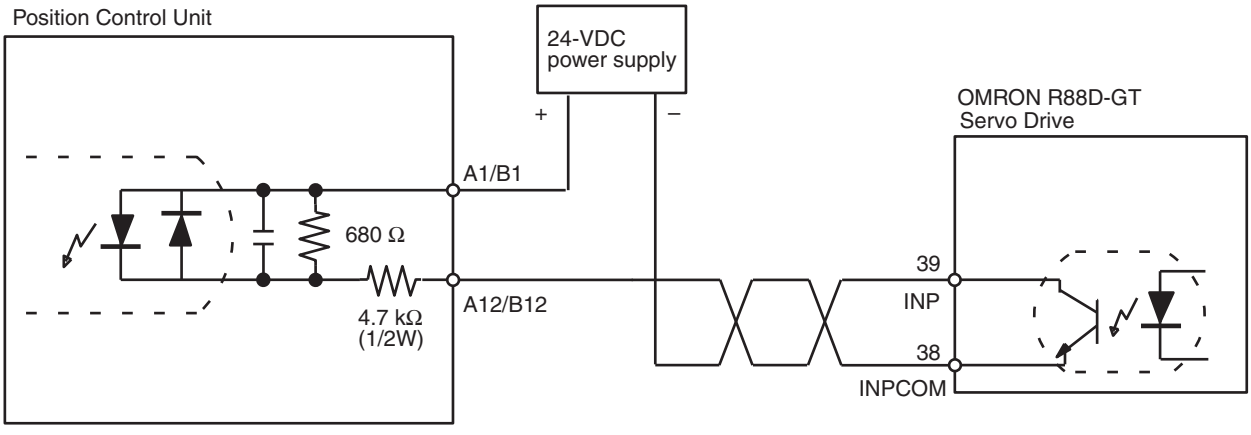

3-4-4 Wiring Precautions

Operational errors such as dislocation can occur in most electronic control devices if they are subjected to electronic noise from nearby power lines or loads. Recovery from such errors is usually very difficult and time consuming.

To avoid such noise-generated operational errors and improve system reliability, always observe the following precautions in wiring the system.

Be sure to use the sizes and materials indicated in the specifications when connecting power lines and cables.

Power lines (e.g., AC power supply, motor power line) and control lines (e.g., pulse output lines, external I/O signal lines) must be wired separately. Never put these lines into the same duct or make them into a single bundle.

- Attach a multi-layer ceramic capacitor of a thickness of less than 1 μF to the pulse output power supply to improve noise resistance.
- Do not use a 24-VDC or 5-VDC power supply for pulse output in common with the power supply for other I/O.
- Use shielded cable for control lines.
- Connect the shielded cable to the frame ground at both the PCU and the driver. Then, check noise levels and performance for the onsite installation conditions. If necessary, use a ground at only one end or take other noise countermeasures.
- Attach a surge absorber to all inductive loads, such as relays, solenoids, and solenoid valves.

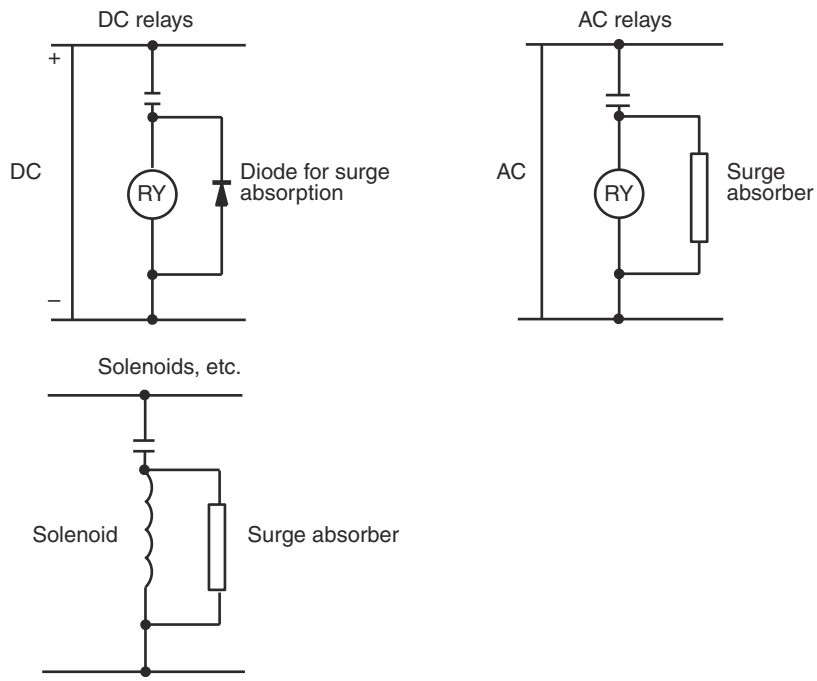

Note Connect the diode and surge absorber as close as possible to the relay. Use a diode capable of withstanding a voltage five times higher than the circuit voltage.

- Insert a noise filter into the power supply inlet if noise enters the power line (e.g., when it is connected to the same power supply as an electric welder or an electric spark machine or when there is any supply generating high frequency noise).
- Connect to a ground of 100 Ω or less and use the thickest possible wire, greater than 1.25 mm^2.
- Twisted-pair cable is recommended for power lines.

3-5 Connection Examples for Different Types of Motor Driver

This section provides examples of wiring the X and Y axes. If the Y and U axes are also to be used, check the connector pin numbers in *3-3 External I/O Circuitry* and wire them in the same way.

Note

1. Be sure to connect a power supply for unused N.C. input terminals and turn them on.
2. Use shielded wire for connecting to stepping motor drivers and Servo Drives. Connect the shielded cable to an FG at both the PCU and the driver.

Example 1: Mode 0 Connection

This example shows the use of a stepping motor with an external sensor signal connected to the origin input signal.

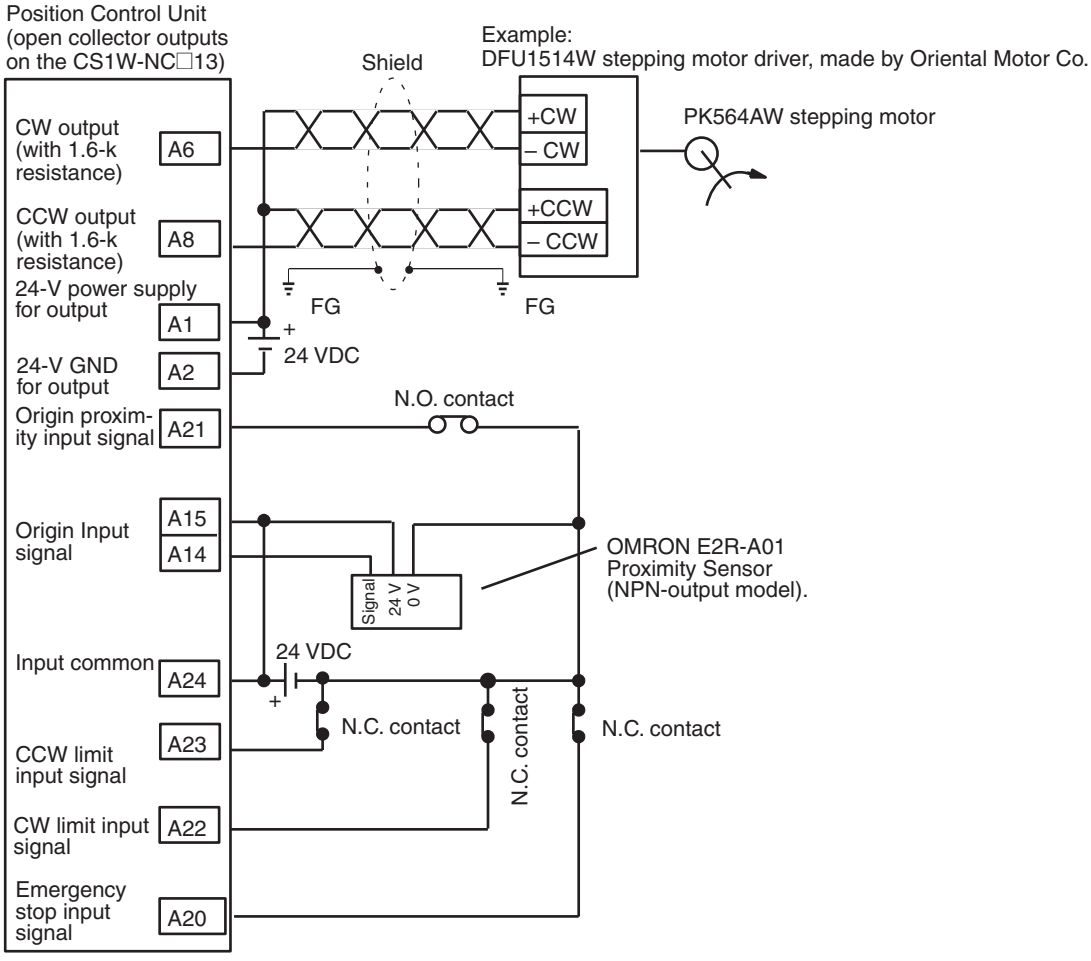

Parameter Setting Example

	15			0
m+4	0	0	6	0
m+5	0	1	0	0

Word	Bits	Setting	Contents
m+4	00	0	CW/CCW output
	01 to 03	0	---
	04	0	Limit input: N.C. contact
	05	1	Origin proximity input signal: N.O. contact
	06	1	Origin input signal: N.O. contact
	07	0	Pulse output stopped with emergency stop input signal.
	08 to 15	0	---
m+5	00 to 03	0	Mode 0
	04 to 07	0	Reverse mode 1
	08 to 11	1	Takes origin input signal after origin proximity input signal is received.
	12 to 15	0	Search direction: CW

Note “m” is the beginning DM word allocated when the unit number is set.

Origin Search Operation

The origin search operation is completed with the rising edge of the origin input signal after the rising edge of the origin proximity input signal.

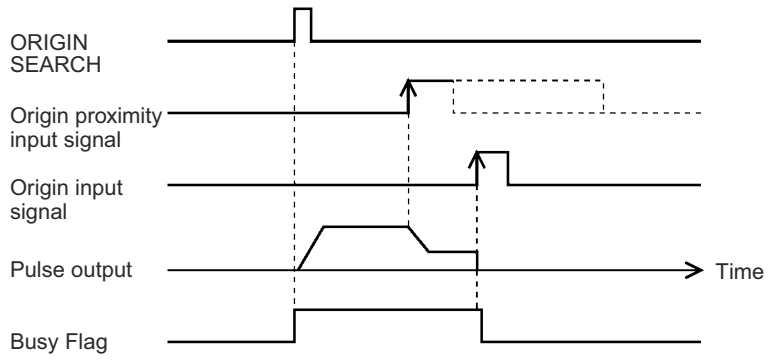

Example 2: Mode 1 Connection

In this example, a Servo Drive is employed and the Z-phase of the encoder is connected to the origin line driver input terminal and used as the origin input signal. An OMRON G-Series Servo Drive is used.

Open Collector Output (CS1W-NC113/NC213/NC413)

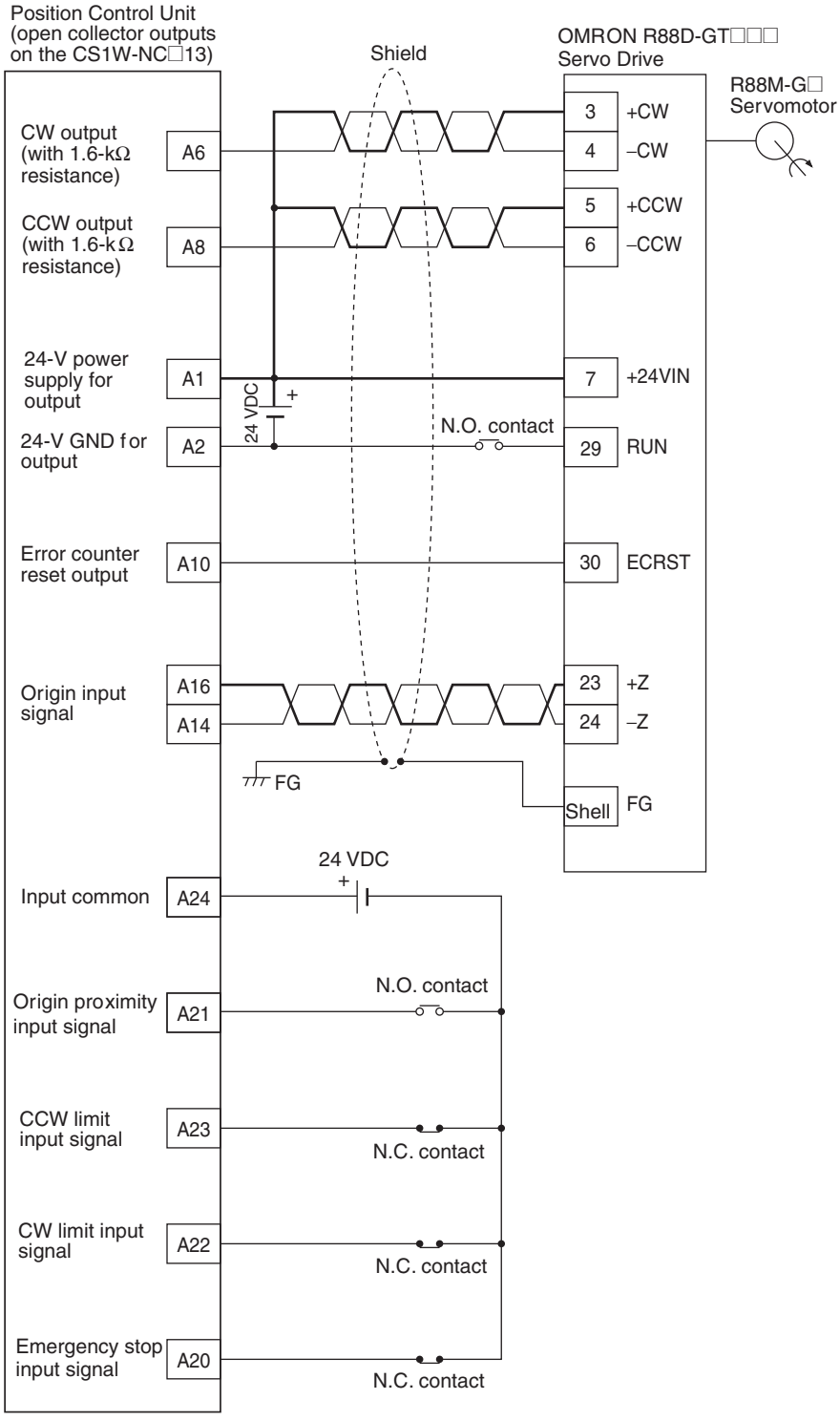

Parameter Setting Example

This example is explained in terms of the X axis. For more details, refer to *4-3 Axis Parameter Area*.

	15			0
m+4	0	0	E	0
m+5	0	0	0	1

Word	Bits	Setting	Contents
m+4	00	0	CW/CCW output
	01 to 03	0	---
	04	0	Limit input: N.C. contact
	05	1	Origin proximity: N.O. contact
	06	1	Origin input signal: N.O. contact
	07	1	Pulse output stopped by emergency stop input signal; error counter reset signal output.
	08 to 15	0	---
m+5	00 to 03	1	Mode 1
	04 to 07	0	Reverse mode 1
	08 to 11	0	Takes origin input signal after rising and falling edge of origin proximity signal.
	12 to 15	0	Motor direction: CW

Note “m” is the beginning DM word allocated when the unit number is set.

Origin Search Operation

The origin search operation stops on the rising edge of the first Z-phase signal after the origin proximity signal has turned from ON to OFF, and after deceleration has ended.

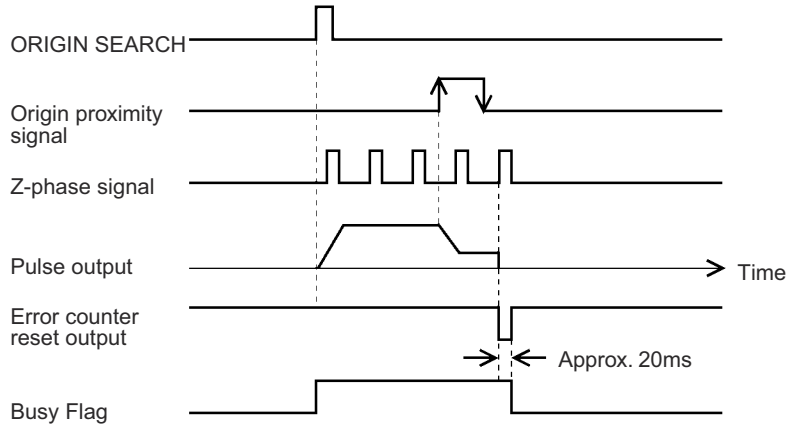

Line Driver Output (CS1W-NC133/NC233/NC433)

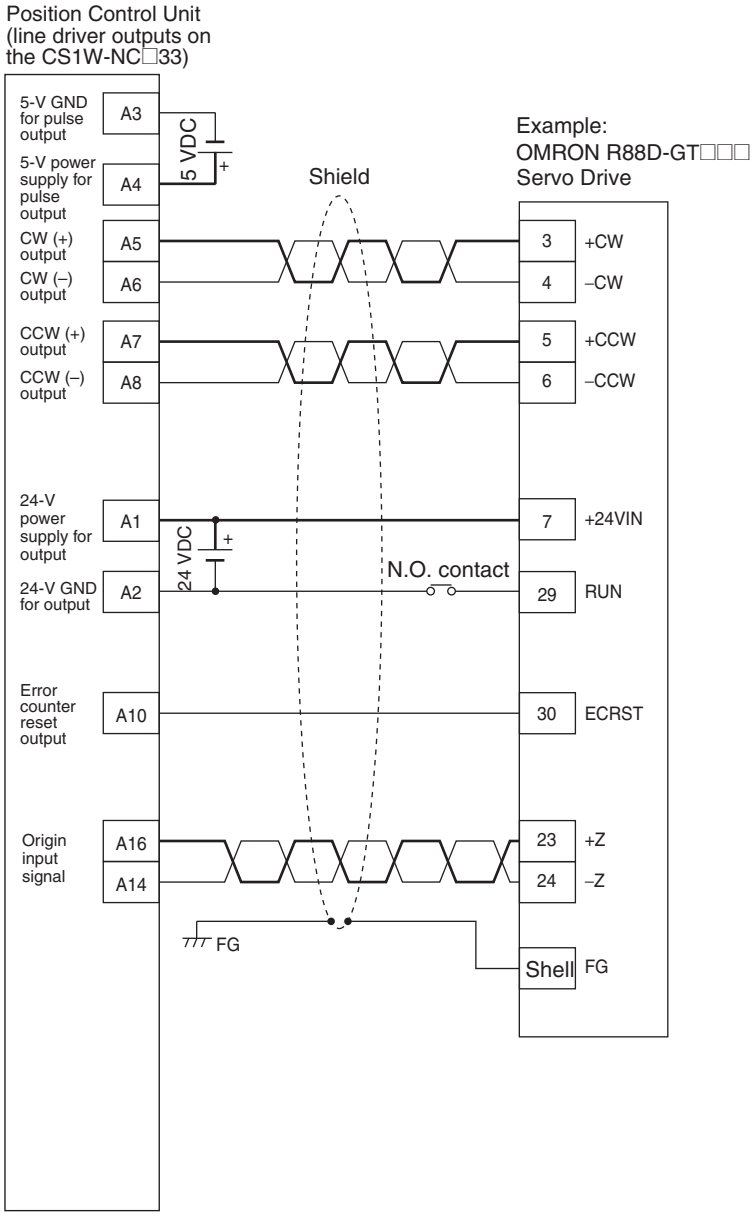

Example 3: Mode 2 Connection

In this example, as in example 2, a Servo Drive is employed and the Z-phase of the encoder is connected to the origin line driver input terminal and used as the origin input signal. OMRON Servo Drive are used.

In contrast to mode 1, the positioning completed signal (INP) of the Servo Drive serves as both the origin search completed and the positioning completed signals.

Set the Servo Drive so that the positioning completed signal turns OFF during motor operation and ON while the motor is stopped.

An origin search operation cannot be completed if the positioning completed input signal from the Servo Drive is not properly connected or set.

W-series Servo Drive (CS1W-NC113/NC213/NC413)

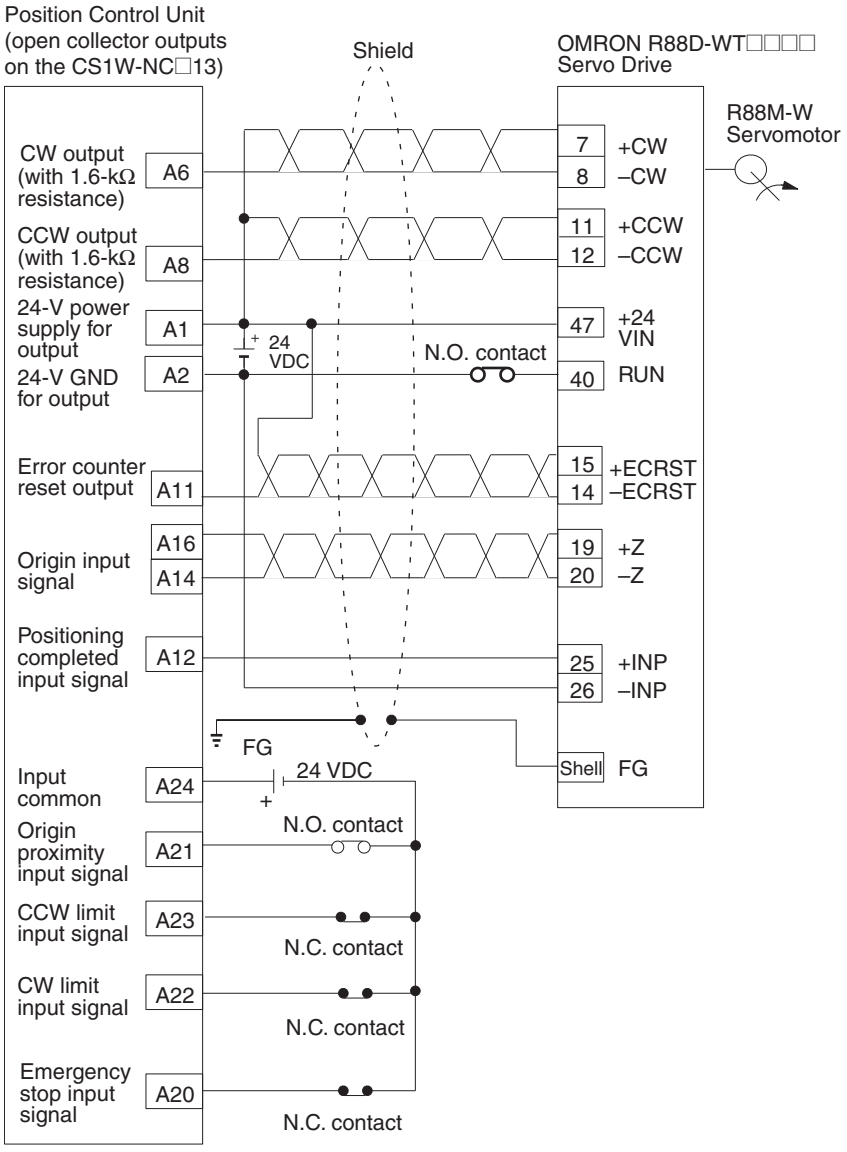

Parameter Setting Example

This example is explained in terms of the X axis. For more details, refer to *4-3 Axis Parameter Area*.

	15			0
m+4	0	0	E	0
m+5	0	0	0	2

Word	Bits	Setting	Contents
m+4	00	0	CW/CCW output
	01 to 03	0	---
	04	0	Limit input: N.C. contact
	05	1	Origin proximity: N.O. contact
	06	1	Origin input signal: N.O. contact
	07	1	Pulse output stopped by emergency stop input signal; error counter reset signal output.
	08 to 15	0	---
m+5	00 to 03	2	Mode 2
	04 to 07	0	Reverse mode 1
	08 to 11	0	Takes origin input signal after rising and falling edge of origin proximity input signal.
	12 to 15	0	Search direction: CW

Note “m” is the beginning DM word allocated when the unit number is set.

Origin Search Operation

The origin search operation stops on the rising edge of the first Z-phase signal after the origin proximity signal has turned from ON to OFF, and after deceleration has ended. The Busy Flag turns OFF with the positioning completed input signal.

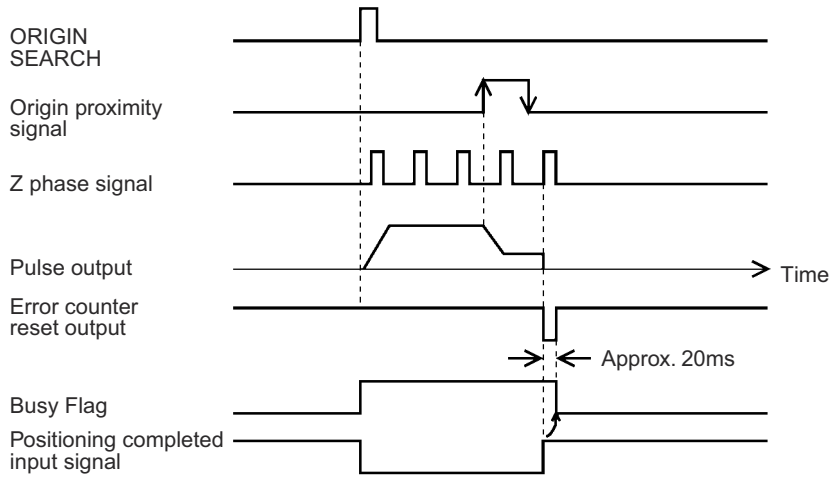

G-series or U-series Servo Drive (CS1W-NC113/NC213/NC413)

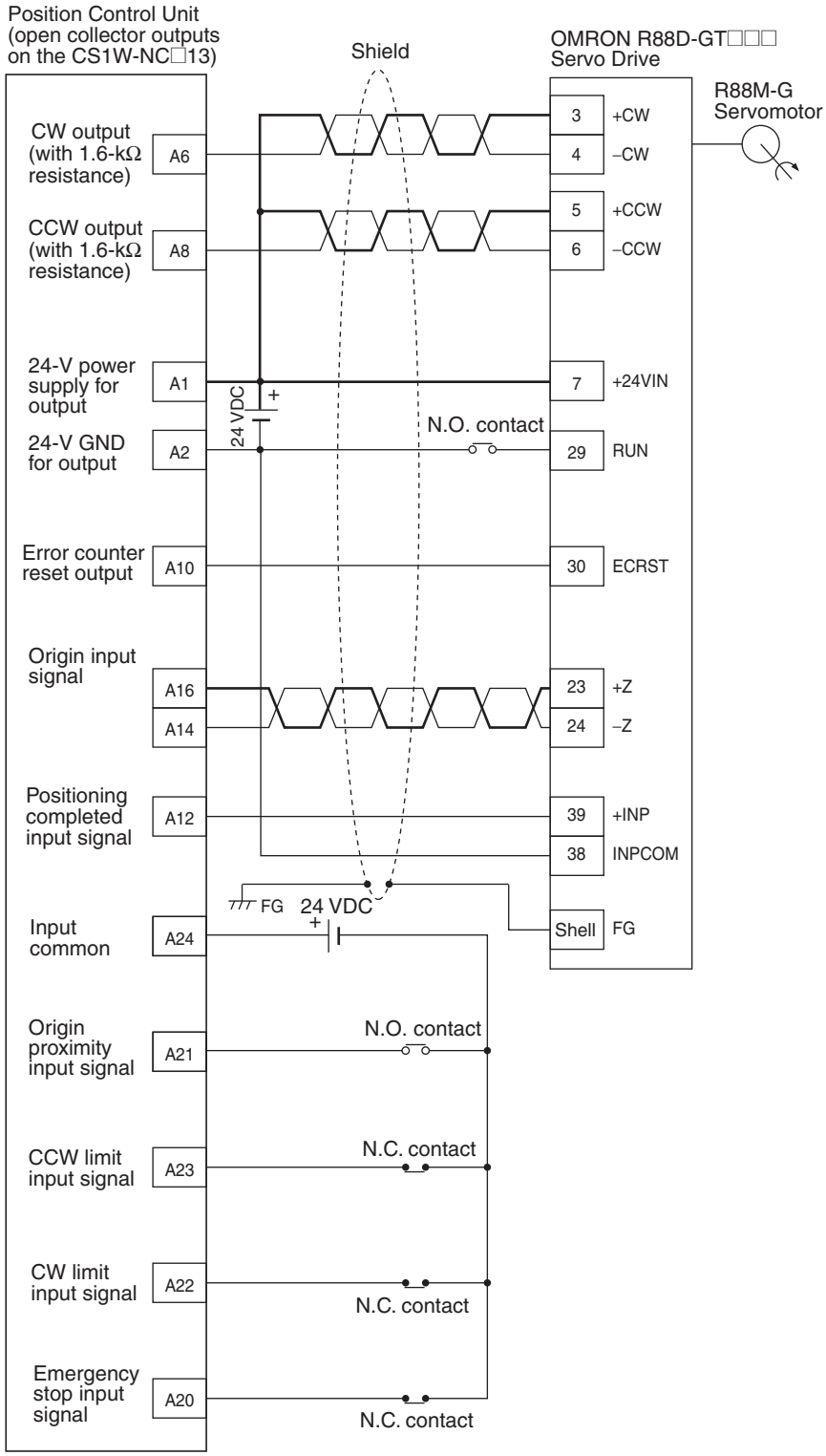

Connection to Line Driver (CS1W-NC133/NC233/NC433)

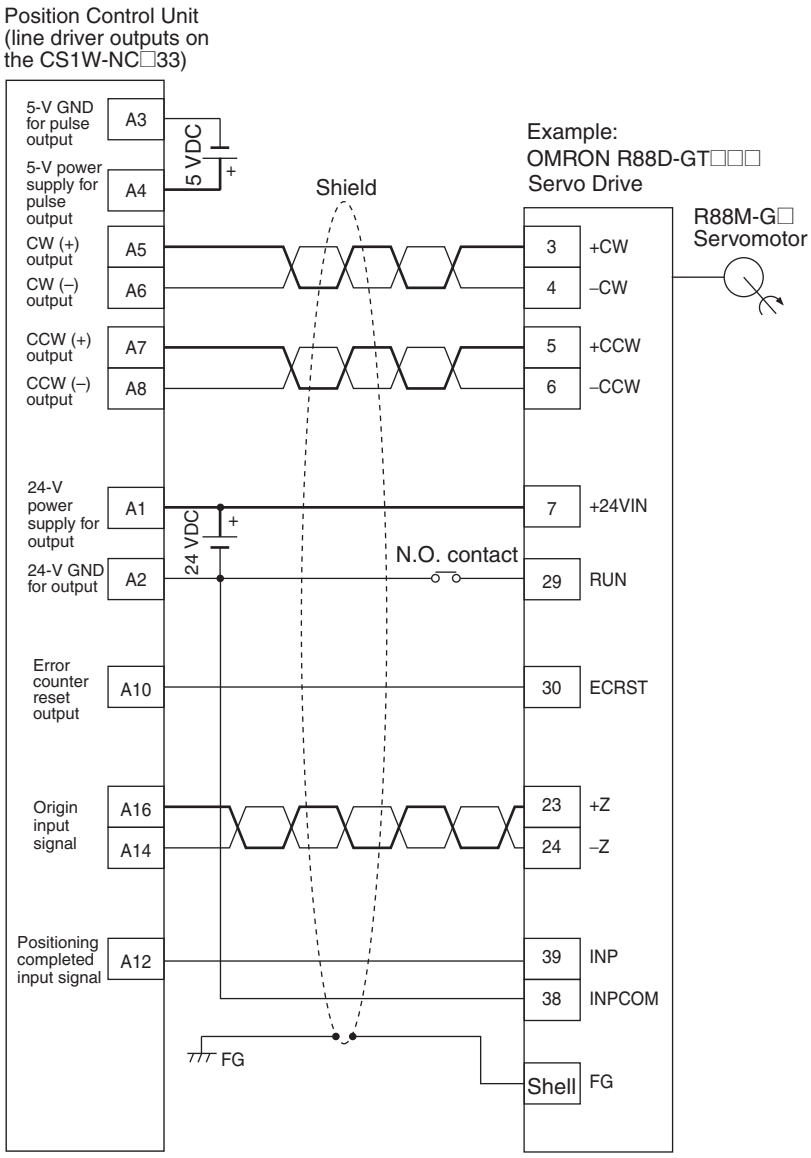

SMARTSTEP2-series or U-series Servo Drive (CS1W-NC113/NC213/NC413)

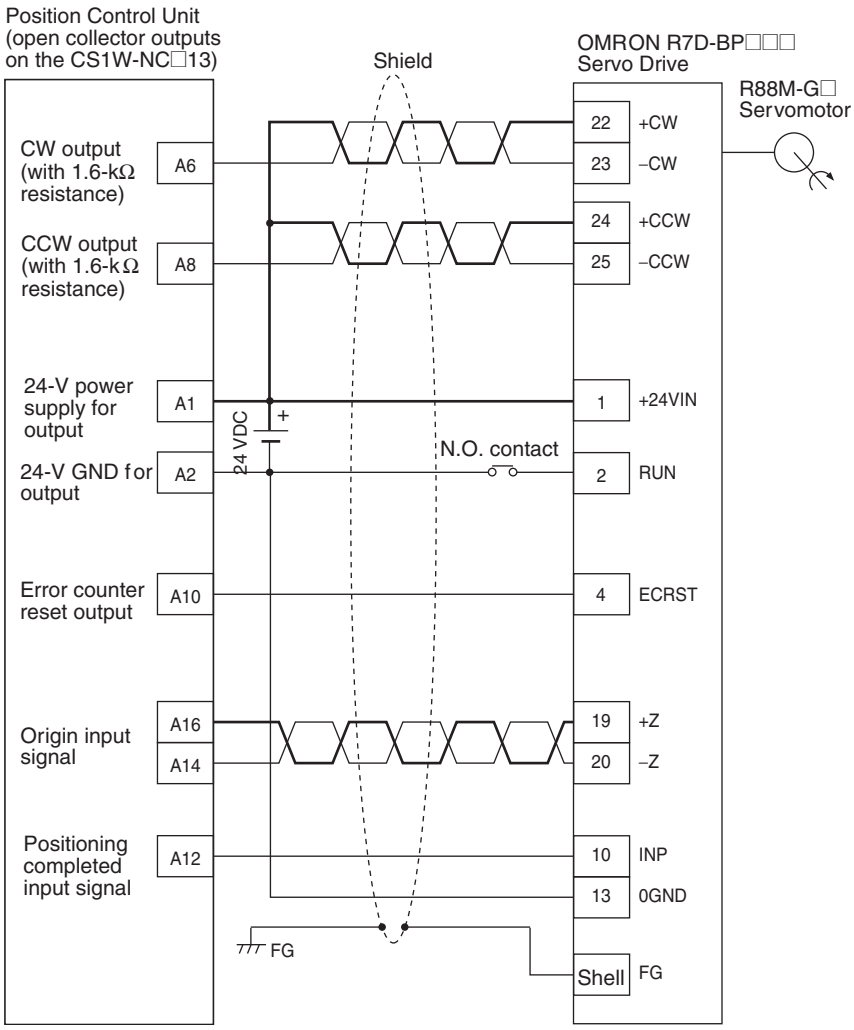

Connection to Line Driver (CS1W-NC133/NC233/NC433)

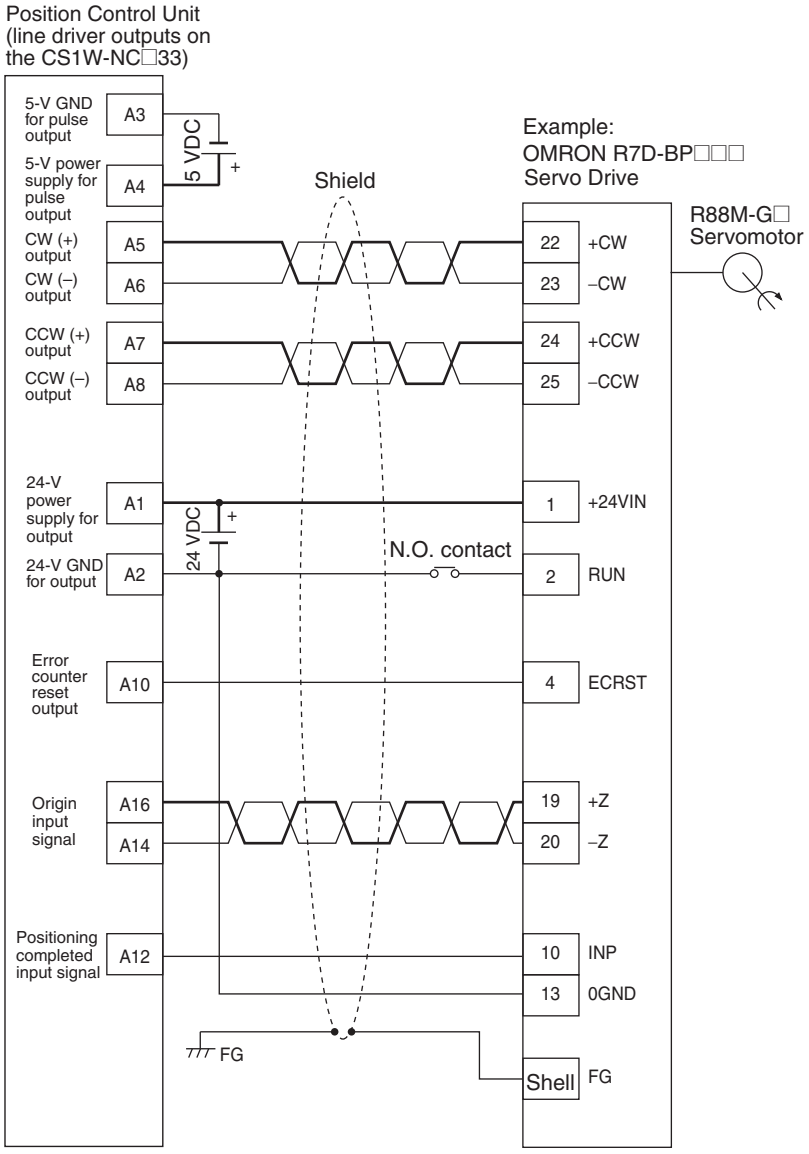

SMARTSTEP A-series Servo Drive (CS1W-NC113/NC213/NC413)

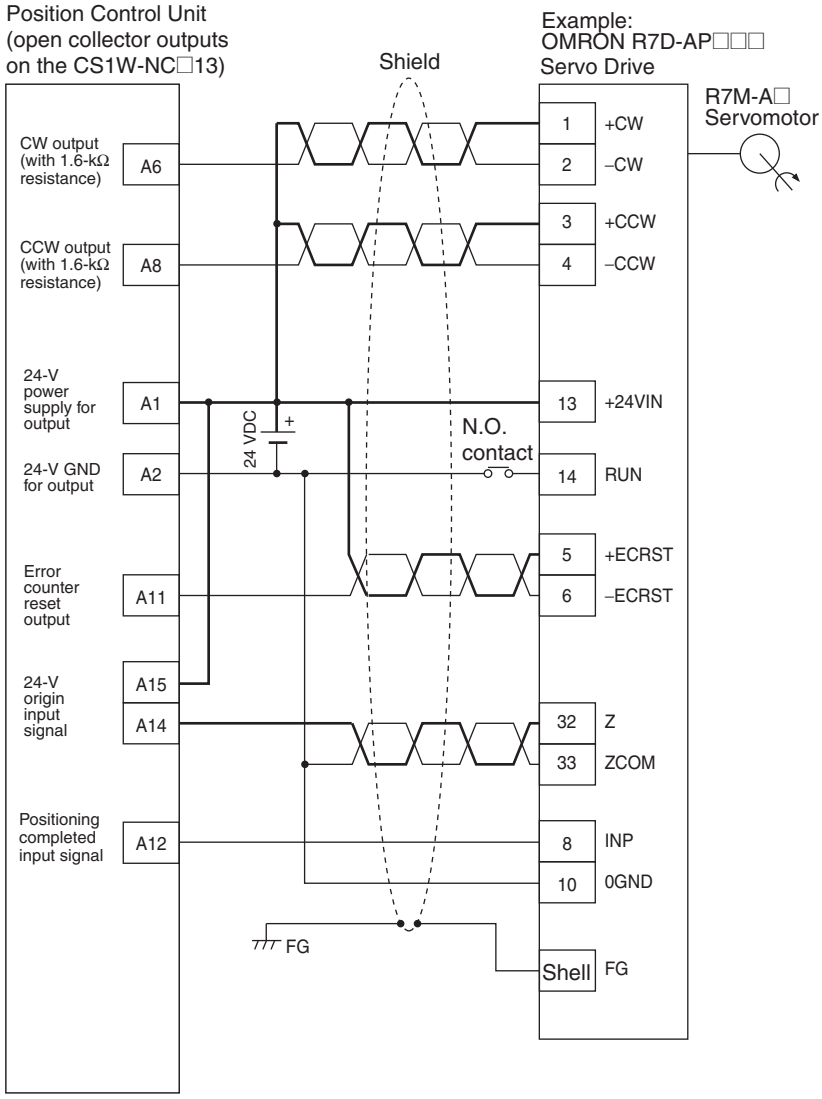

Connection to Line Driver (CS1W-NC133/NC233/NC433)

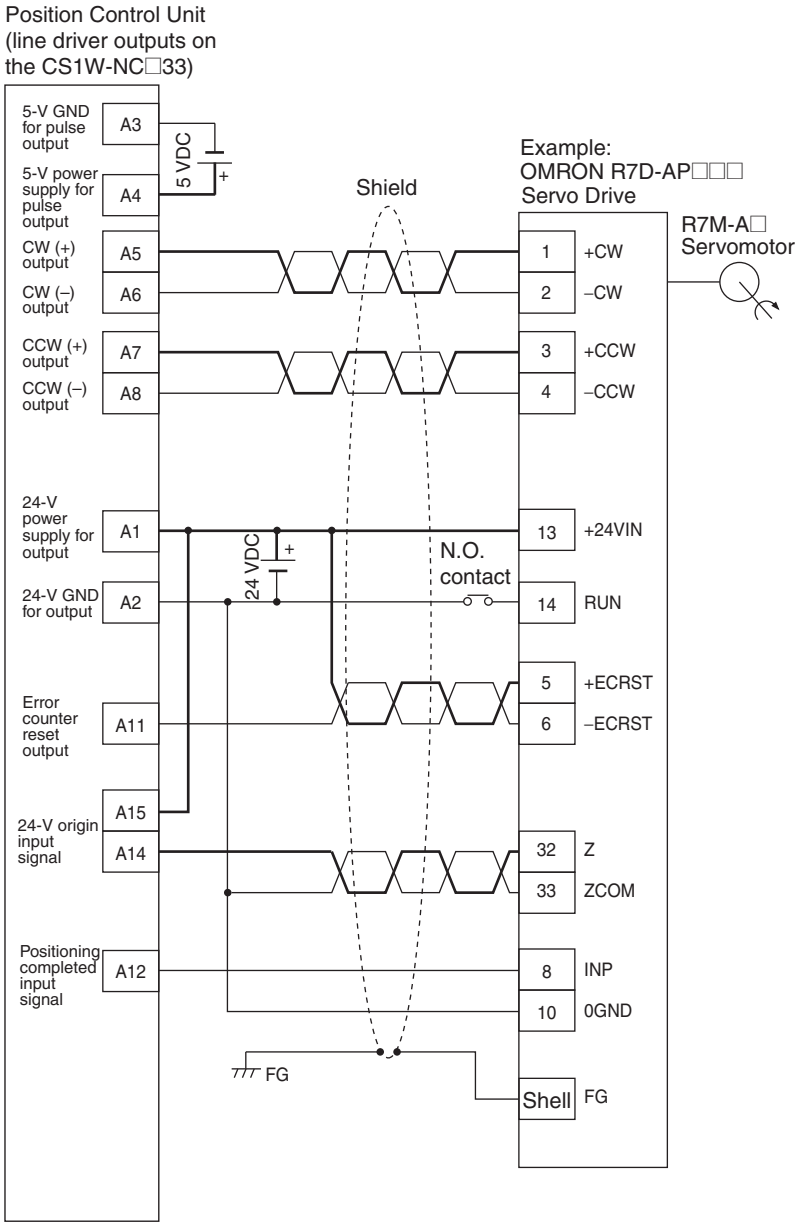

3-6 Connection of Unused Axes

This section provides connection examples for the CS1W-NC213, CS1W-NC233, CS1W-NC413, and CS1W-NC433 in applications where not all axes are used.

3-6-1 Using Only the X Axis and Not the Y Axis on the CS1W-NC213/NC233 (with Unit Version 2.1 or Later)

On PCUs with unit version 2.1 or later, wiring is not required for the CW/CCW limit input signal and the emergency stop input signal for specified unused axes.

The following figure, based on *Example 2: Mode 1 Connection in 3-5 Connection Examples for Different Types of Motor Driver*, shows an example of connecting external I/O when only the X axis and not the Y axis is used on the CS1W-NC213/NC233. The limit input signal for the X axis is assumed to be set as an N.C. connection.

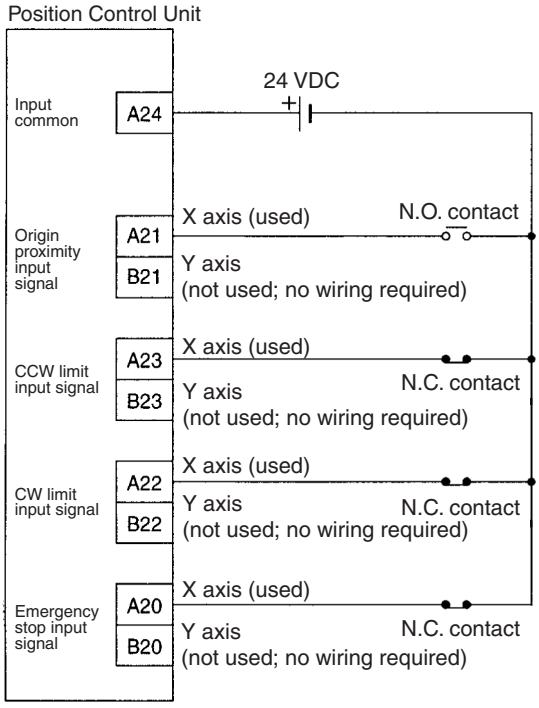

To set only the X axis as the axis to be used, set the number of unused axes to 01 in *Axis Parameter Designation* of *4-2 Common Parameter Area*.

The following table shows the relation for each Unit between the number of unused axes and the settings.

Setting	1-axis Unit	2-axis Unit	4-axis Unit
0	All axes used.	All axes used.	All axes used.
1	Error 0013 occurs.	Axis Y not used.	Axis U not used.
2	Error 0013 occurs.	Error 0013 occurs.	Axes Z and U not used.
3	Error 0013 occurs.	Error 0013 occurs.	Axes Y, Z, and U not used.

Making this setting eliminates the need to perform wiring for the Y axis.

If other parameters are used in their default settings, the CW/CCW limit input signal will be set to a N.C. contact input. Therefore, current will flow for the signal when the power supply for the inputs is connected.

3-6-2 CS1W-NC213/NC233 – X Axis Only (Unit Versions Earlier Than 2.1)

On PCUs with a unit version earlier than 2.1, unused axes require only the emergency stop input signal to be wired.

Based on *Example 2: Mode 1 Connection* on page 47, the following example shows the connections for the CS1W-NC213/NC233 when only the X axis (and not the Y axis) is used. In this example, the limit input signals for both axes are set to N.C. contacts. With the CS1W-NC413/NC433, if the Z axis is used and the U axis is not used, the connection will be the same with X and Y replaced by Z and U respectively.

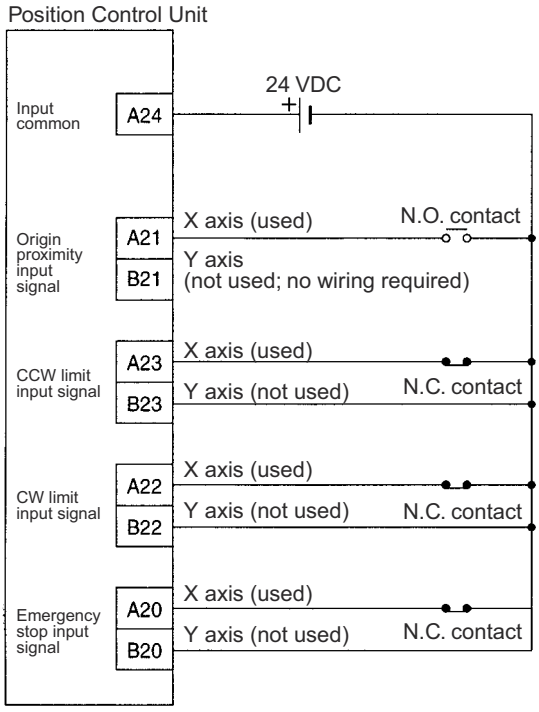

When there is an unused axis, connect the emergency stop input signal (N.C. contact) and the CW/CCW limit input signals (N.C./N.O. switchable) for that axis so that they are ON. If the parameters are at their default settings, the CW/CCW limit input signals are N.C. contact inputs and so connect an input power supply and keep power ON.

If the emergency stop input signal and the CW/CCW limit input signals for an unused axis are not ON, a sensor input error (error codes 6000, 6100, or 6101) will be generated for the axis, and the ERC and SENS indicators as well as the LED indicator for the axis will light or flash. The used axis, however, will continue to operate normally even if an error is generated for the unused axis.

Note If the CW/CCW limit input signals for the unused axis are set to N.O contacts using the parameter settings, it is not necessary to wire the CW/CCW limit inputs. For details, refer to *4-3 Axis Parameter Area*.

3-7 Servo Relay Unit

- Wiring requirements can be reduced by connecting Servo Drives and PCUs via a Servo Relay Unit, which provide a connector and a terminal block in one Unit.

- The connecting cable and the type of Servo Relay Unit required will depend on the Servo Drive model connected. Refer to the tables under *Connection Compatibility* given below.

Connections Diagram

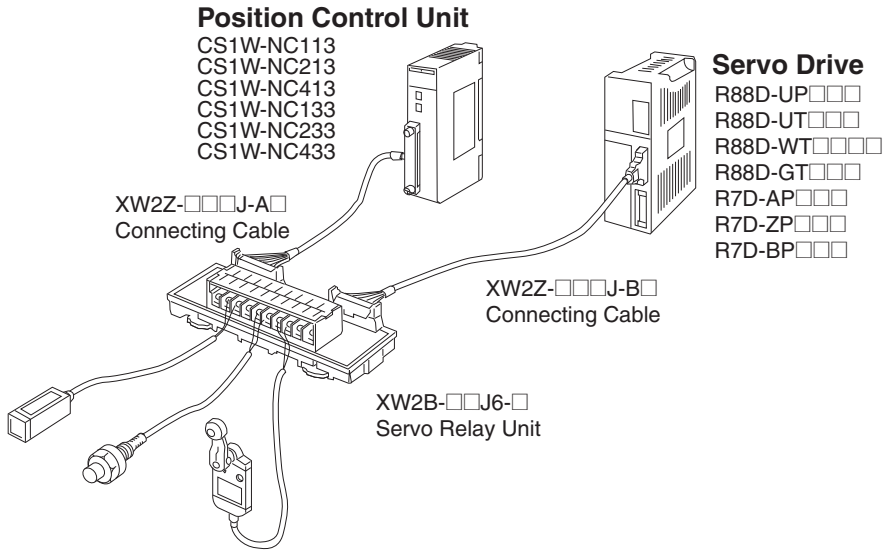

Connection Compatibility

CS1W-NC113/NC213/NC413

PCU	Cable connected to PCU	Servo Relay Unit	Cable connected to Servo Relay Unit	Servo Drive
CS1W-NC113	XW2Z-□□□J-A6	XW2B-20J6-1B	XW2Z-□□□J-B1	R88D-UP□□□
			XW2Z-□□□J-B4	R88D-UT□□□
				R88D-WT□□□□
			XW2Z-□□□J-B25	R88D-GT□□□
			XW2Z-□□□J-B29	R7D-BP□□□
	XW2Z-□□□J-A8	XW2B-20J6-1B	XW2Z-□□□J-B5	R7D-AP□□□
			XW2Z-□□□J-B17	R7D-ZP□□□
CS1W-NC213 CS1W-NC413	XW2Z-□□□J-A7	XW2B-40J6-2B	XW2Z-□□□J-B1	R88D-UP□□□
			XW2Z-□□□J-B4	R88D-UT□□□
				R88D-WT□□□□
			XW2Z-□□□J-B25	R88D-GT□□□
			XW2Z-□□□J-B29	R7D-BP□□□
	XW2Z-□□□J-A9	XW2B-40J6-2B	XW2Z-□□□J-B5	R7D-AP□□□
			XW2Z-□□□J-B17	R7D-ZP□□□
	XW2Z-□□□J-A9	XW2B-40J6-4A	XW2Z-□□□J-B7	R7D-AP□□□ (when using RS-422)

CS1W-NC133/NC233/NC433

PCU	Cable connected to PCU	Servo Relay Unit	Cable connected to Servo Relay Unit	Servo Drive
CS1W-NC133	XW2Z-□□□J-A10	XW2B-20J6-1B	XW2Z-□□□J-B1	R88D-UP□□□
			XW2Z-□□□J-B4	R88D-UT□□□
				R88D-WT□□□□
			XW2Z-□□□J-B25	R88D-GT□□□
			XW2Z-□□□J-B29	R7D-BP□□□
	XW2Z-□□□J-A12	XW2B-20J6-1B	XW2Z-□□□J-B5	R7D-AP□□□
			XW2Z-□□□J-B17	R7D-ZP□□□
CS1W-NC233 CS1W-NC433	XW2Z-□□□J-A11	XW2B-40J6-2B	XW2Z-□□□J-B1	R88D-UP□□□
			XW2Z-□□□J-B4	R88D-UT□□□
				R88D-WT□□□□
			XW2Z-□□□J-B25	R88D-GT□□□
			XW2Z-□□□J-B29	R7D-BP□□□
	XW2Z-□□□J-A13	XW2B-40J6-2B	XW2Z-□□□J-B5	R7D-AP□□□
			XW2Z-□□□J-B17	R7D-ZP□□□
	XW2Z-□□□J-A13	XW2B-40J6-4A	XW2Z-□□□J-B7	R7D-AP□□□ (when using RS-422)

- The cable length for PCU Connecting Cables is indicated in the "□□□".
  050: 0.5 m
  100: 1 m
- The cable length for Servo Drive Connecting Cables is indicated in the "□□□".
  100: 1 m
  200: 2 m
- When using the CS1W-NC413/433, 2 Servo Relay Units and 2 PCU Connecting Cables are required.
- When using in combination with the CS1W-NC213/NC233 (2-axis control), 2 Servo Drive Connecting Cables are required.
- When using in combination with the CS1W-NC413/NC433 (4-axis control), 4 Servo Drive Connecting Cables are required.

SECTION 4
Data Areas

This section provides an overview of the parameter and data settings used in Position Control Unit operation and provides information on memory allocation.

4-1 Overall Structure 64
4-1-1 Data Areas 66
4-2 Common Parameter Area 69
4-2-1 Outline 70
4-2-2 Details 70
4-3 Axis Parameter Area 74
4-3-1 Outline 74
4-3-2 Details 77
4-3-3 Operation Modes 80
4-4 Operating Memory Area 94
4-4-1 Outline 94
4-5 Operating Data Area 98
4-5-1 Outline 98
4-6 Memory Operation Data 101
4-6-1 Outline 101
4-7 Zone Data Area 104
4-7-1 Zone Function 104
4-7-2 Zone Data Settings 105
4-8 Examples of Parameter Settings 105
4-8-1 Setting Positioning Using Two Axes 105
4-8-2 Setting Positioning Using One Axis 107
4-8-3 Setting for Continuous Operation in the Same Direction for One Axis 109

4-1 Overall Structure

The PCU is used by exchanging data with the CPU Unit as shown below.

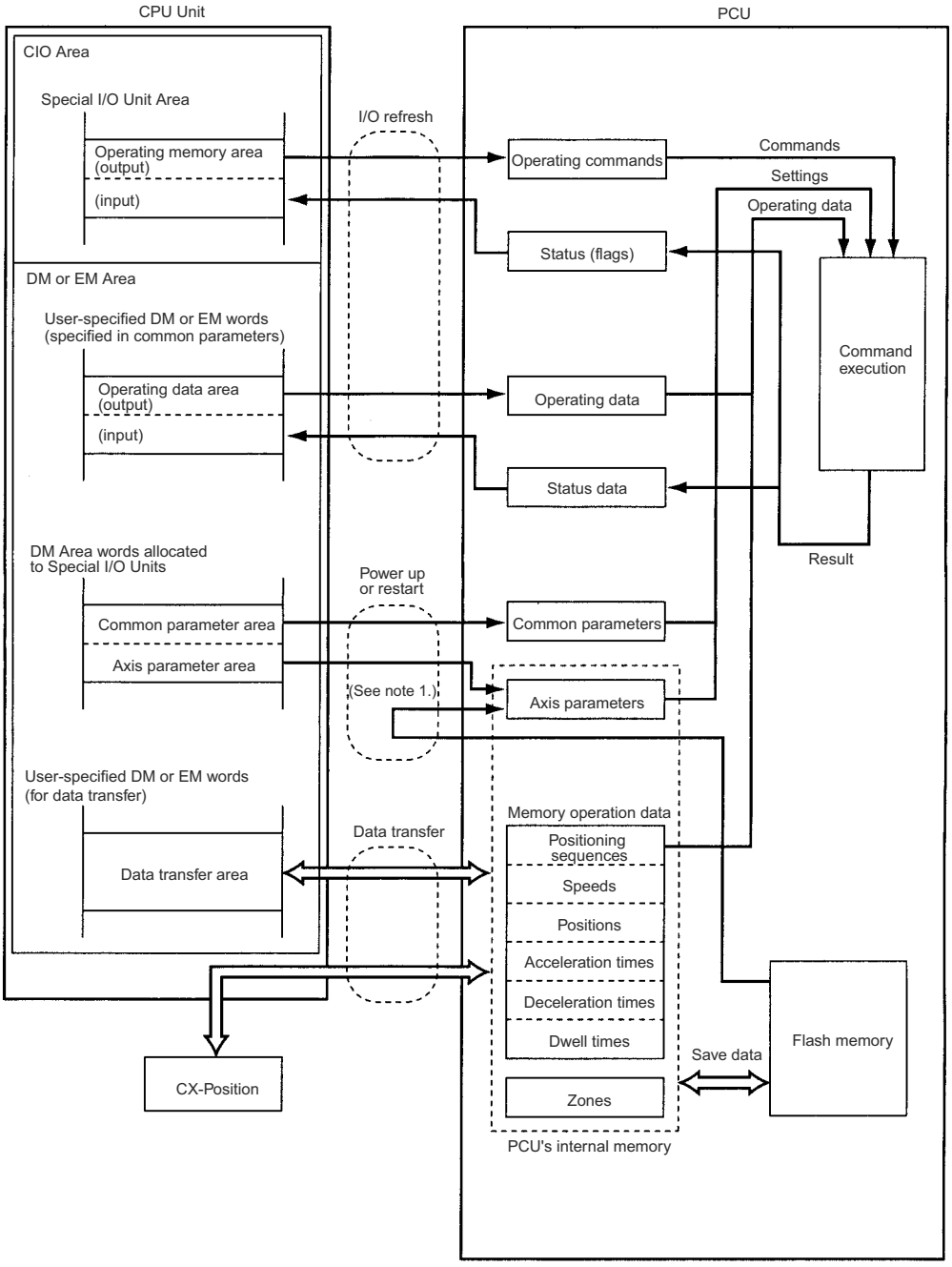

Note The user can select by means of a common parameters setting whether the axis parameters set in the CPU Unit's DM Area are to be transferred to the PCU for use, or whether the axis parameters saved in the PCU's flash memory are to be used.

The data handled by the PCU can be classified in the way shown below.

Data name	Contents	Setting area	Enable timing
Common parameter area (Refer to *4-2 Common Parameter Area*.)	This area contains the parameters for settings related to basic PCU operation, such as allocation of the operating memory area. The common parameters must be set when using the PCU.	DM Area words in the CPU Unit allocated to Special I/O Units	The settings are transferred from the CPU Unit to the PCU at power up or restart and enabled.
Axis parameter area (Refer to *4-3 Axis Parameter Area*.)	This area contains the parameters for settings related to axis operation, such as pulse output type, logic for input signals, operation modes, and maximum speed values.	DM Area words in the CPU Unit allocated to Special I/O Units PCU's flash memory (See note on previous page.)	These settings are transferred from the CPU Unit's DM Area or the PCU's flash memory to the PCU's internal memory at power up or restart and enabled.
Operating memory area (Refer to *4-4 Operating Memory Area*.)	Outputs for controlling PCU operation, such as for direct operation, memory operation, jogging, and origin search, are allocated to this area. Information (see note) relating to the status of the PCU, such as busy flags, error flags, and external input are input to this area.	CPU Unit's Special I/O Unit Area	Operating commands are sent from the CPU Unit to the PCU and status data is sent from the PCU to the CPU Unit with every I/O refresh.
Operating data area (Refer to *4-5 Operating Data Area*.)	This area is for settings such as positions, speeds, and acceleration/deceleration times for direct operation, origin searches and jogging, as well as positioning sequence numbers for memory operation. It also contains PCU status data (see note), such as present positions and the number of the currently executed positioning sequence.	CPU Unit's DM or EM area (determined by common parameter setting)	Data is updated with every I/O refresh. The set data is enabled and used with the startup of each operation.
Memory operation data (Refer to *4-6 Memory Operation Data*.)	This area is for settings related to memory operation, such as operation sequences, positions, speeds, and acceleration/deceleration times. The memory operation area contains the following six types of data: • Positioning sequences • Speeds • Positions • Acceleration times • Deceleration times • Dwell times	PCU's internal memory (can be saved to PCU's flash memory)	Data is read from the PCU's flash memory to the internal memory at power up or restart. Settings are updated when data is transferred. The set data is enabled and used with the startup of each memory operation.
Zone data (Refer to *4-7 Zone Data Area*.)	This data determines zones for the present positions of axes controlled by the PCU.	PCU's internal memory (can be saved to PCU's flash memory)	Data is read from the PCU's flash memory to the internal memory at power up or restart. Settings are updated when data is transferred.

Note Error codes are input to the operating memory area.

Using these settings, the PCU executes operation (1) using the data/parameter areas specified in the common parameters and axis parameters (2) according to the operating commands received from the operating memory area and (3) based on operating data, memory operation data, and zone data.

The common parameters and axis parameters are basic settings for the PCU and the axes to be controlled. It is necessary to make these settings when using the PCU. Make settings for operating data, memory operation data, and zone data according to the kind of operation required.

4-1-1 Data Areas

The following tables give the addresses (bit/word addresses in the CPU Unit and addresses in the PCU's internal memory) for the parameters and data handled by the PCU. For more details, refer to the relevant sections.

Note Do not write to unused areas in parameters and data. Doing so may cause, malfunctions.

Common Parameter Area (refer to page 69)

Beginning word of common parameter area, m = D20000 + 100 × unit number.

Word (same for all models)	Name	Data size
m	Operating data area designation	1 word
m+1	Beginning word of operating data area	1 word
m+2	Axis parameter designation	1 word
m+3	Not used	1 word

Axis Parameter Area (refer to page 74)

Word (address in PCU)				Name	Data size
X axis	Y axis	Z axis	U axis		
m+4 (0004)	m+32 (0020)	m+60 (003C)	m+88 (0058)	I/O settings	1 word
m+5 (0005)	m+33 (0021)	m+61 (003D)	m+89 (0059)	Operation mode selection	1 word
m+6 (0006)	m+34 (0022)	m+62 (003E)	m+90 (005A)	Maximum speed	2 words
m+8 (0008)	m+36 (0024)	m+64 (0040)	m+92 (005C)	Initial speed	2 words
m+10 (000A)	m+38 (0026)	m+66 (0042)	m+94 (005E)	Origin search high speed	2 words
m+12 (000C)	m+40 (0028)	m+68 (0044)	m+96 (0060)	Origin search proximity speed	2 words
m+14 (000E)	m+42 (002A)	m+70 (0046)	m+98 (0062)	Origin compensation	2 words
m+16 (0010)	m+44 (002C)	m+72 (0048)	m+100 (0064)	Backlash compensation	1 word
m+17 (0011)	m+45 (002D)	m+73 (0049)	m+101 (0065)	Backlash compensation speed	2 words
m+19 (0013)	m+47 (002F)	m+75 (004B)	m+103 (0067)	Acceleration/Deceleration curves, acceleration/deceleration time designations	1 word
m+20 (0014)	m+48 (0030)	m+76 (004C)	m+104 (0068)	Origin search acceleration time	2 words
m+22 (0016)	m+50 (0032)	m+78 (004E)	m+106 (006A)	Origin search deceleration time	2 words
m+24 (0018)	m+52 (0034)	m+80 (0050)	m+108 (006C)	Positioning monitor time	2 words
m+25 (0019)	m+53 (0035)	m+81 (0051)	m+109 (006D)	CCW software limit	2 words
m+27 (001B)	m+55 (0037)	m+83 (0053)	m+111 (006F)	CW software limit	2 words
m+31 (001F)	m+59 (003B)	m+87 (0057)	m+115 (0073)	Initial pulse designation	1 word

Operating Memory Area (refer to page 94)

Beginning word of operating memory area, n = 2000 + 100 × unit number.

Words							Bits	Operation
1 axis	2 axes		4 axes					
X axis	X axis	Y axis	X axis	Y axis	Z axis	U axis		
n	n	n+2	n	n+2	n+4	n+6	00	Sequence Number Enable
							01	START
							02	INDEPENDENT START
							03	ABSOLUTE MOVEMENT
							04	RELATIVE MOVEMENT
							05	INTERRUPT FEEDING
							06	ORIGIN SEARCH
							07	ORIGIN RETURN
							08	PRESENT POSITION PRESET
							09	JOG
							10	Direction designation
							11	TEACH
							12	RELEASE PROHIBIT/ERROR RESET
							13	Error counter reset output/origin-adjustment command output
							14	Override Enable
							15	STOP
n+1	n+1	n+3	n+1	n+3	n+5	n+7	00 to 07	Not used
							08	FORCED INTERRUPT
							09 to 11	Not used
							12	WRITE DATA
							13	READ DATA
							14	SAVE DATA
							15	Not used
n+2	n+4	n+7	n+8	n+11	n+14	n+17	00 to 03	Not used
							04	Waiting For Memory Operation Flag
							05	Positioning Completed Flag
							06	No Origin Flag
							07	Origin Stop Flag
							08	Zone 0 Monitor Flag
							09	Zone 1 Monitor Flag
							10	Zone 2 Monitor Flag
							11	Teaching Completed Flag
							12	Error Flag
							13	Busy Flag
							14	Data Transferring Flag
							15	Deceleration Stop Execution Flag

Words							Bits	Operation
1 axis	2 axes		4 axes					
X axis	X axis	Y axis	X axis	Y axis	Z axis	U axis		
n+3	n+5	n+8	n+9	n+12	n+15	n+18	00 to 07	Not used
							08	CW limit input signal
							09	CCW limit input signal
							10	Origin proximity input signal
							11	Origin input signal
							12	Interrupt input signal
							13	Emergency stop input signal
							14	Positioning completed signal
							15	Error counter reset output/origin-adjustment command output
n+4	n+6	n+9	n+10	n+13	n+16	n+19	00 to 15	Error code

Operating Data Area (refer to page 98)

Beginning word of operating data area, I = word specified in common parameters (m, m+1).

Words							Name	Data size
1 axis	2 axes		4 axes					
X axis	X axis	Y axis	X axis	Y axis	Z axis	U axis		
I	I		I				Number of write words	1 word
I+1	I+1		I+1				Write source area	1 word
I+2	I+2		I+2				Write source word	1 word
I+3	I+3		I+3				Write destination address	1 word
I+4	I+4		I+4				Number of read words	1 word
I+5	I+5		I+5				Read source address	1 word
I+6	I+6		I+6				Read destination area	1 word
I+7	I+7		I+7				Read destination word	1 word
I+8	I+8	I+20	I+8	I+20	I+32	I+44	Position	2 words
I+10	I+10	I+22	I+10	I+22	I+34	I+46	Speed	2 words
I+12	I+12	I+24	I+12	I+24	I+36	I+48	Acceleration time	2 words
I+14	I+14	I+26	I+14	I+26	I+38	I+50	Deceleration time	2 words
I+16	I+16	I+28	I+16	I+28	I+40	I+52	Positioning sequence	1 word
I+17	I+17	I+29	I+17	I+29	I+41	I+53	Override	1 word
I+18	I+18	I+30	I+18	I+30	I+42	I+54	Teaching address	1 word
I+19	I+19	I+31	I+19	I+31	I+43	I+55	Not used	1 word
I+20	I+32	I+36	I+56	I+60	I+64	I+68	Present position	2 words
I+22	I+34	I+38	I+58	I+62	I+66	I+70	Positioning sequence	1 word
I+23	I+35	I+39	I+59	I+63	I+67	I+71	Output code	1 word

Memory Operation Data (refer to page 101)

PCU internal address				Name	Data size
X axis	Y axis	Z axis	U axis		
1000	2000	3000	4000	Positioning sequence numbers 0 to 99	3 words
112C	212C	312C	412C	Speed numbers 0 to 99	2 words
11F4	21F4	31F4	41F4	Position numbers 0 to 99	2 words
12BE	22BE	32BE	42BE	Acceleration time numbers 1 to 9	2 words
12D2	22D2	32D2	42D2	Deceleration time numbers 1 to 9	2 words
12E5	22E5	32E5	42E5	Dwell time numbers 1 to 19	1 word

Zone Data Area (refer to page 104)

PCU internal address				Name	Data size
X axis	Y axis	Z axis	U axis		
12F8	22F8	32F8	42F8	Zone 0, CCW	2 words
12FA	22FA	32FA	42FA	Zone 0, CW	2 words
12FC	22FC	32FC	42FC	Zone 1, CCW	2 words
12FE	22FE	32FE	42FE	Zone 1, CW	2 words
1300	2300	3300	4300	Zone 2, CCW	2 words
1302	2302	3302	4302	Zone 2, CW	2 words

4-2 Common Parameter Area

The common parameter settings determine the areas used to set the operating data (the operating data area) and axis parameters (the axis parameter area) required for axis control. The common parameters must be set before using the PCU.

4-2-1 Outline

Memory from the area allocated to Special I/O Units in the CPU Unit's DM Area is allocated to the common parameters. The beginning word of the allocated area is determined by the unit number set for the PCU according to the following equation.

Beginning word of common parameter area, m = D20000 + 100 × unit number.

After the common parameter settings have been made, they will go into effect the next time the PCU is powered up or restarted.

The settings for the common parameters are explained below.

Word (same for all models)	Name	Configuration/Explanation	Page
m	Operating data area designation	Designate the memory area to which the operating data is to be set. Select one from the following. 0000: DM Area words allocated to Special I/O Units (fixed) 000D: User-specified DM Area words 0X0E: User-specified EM Area words (X: bank number)	70
m+1	Beginning word of operating data area	Designate the beginning word of the operating data area. If 000D (user-specified DM Area words) or 0X0E (user-specified EM Area words) is set for the operating data area designation, specify the beginning word of the area to be allocated as the operating data area in hexadecimal.	
m+2	Axis parameter designation	Designate the location of the data to be used as axis parameters. Select one from the following. • Axis parameter data saved in the PCU's flash memory. • Axis parameter data set in the CPU Unit's DM Area. • PCU's default setting. • Settings for unused axes (supported on PCUs with unit version 2.1 or later).	70
m+3	Not used	This area is not used. Leave set to 0000.	72

4-2-2 Details

The details of the common parameters settings are given below.

Designation and Beginning Word of Operating Data Area

Word Address and Enable Timing

The word addresses and enable timing for the beginning word of operating data area and operating data area designation settings are shown below.

Word			Name	Enable timing
NC1□3	NC2□3	NC4□3		
m			Operating data area designation	At power up or restart
m+1			Beginning word of operating data area	

Bit Configuration

The bit configurations for the word addresses in the above table are shown below.

	15 … 08	07 … 00
m	Bank designation	Area designation
m+1	Beginning word of operating data area (Hex)	

Settings

The following settings are available.

Word m: 0000, 000D, 0X0E (X = 0 to 9, A, B, or C)

Word m+1: 0000 to 7FXX Hex (settings possible for "XX" will depend on the model)

Explanation

The meanings of each of the settings are given below.

Area Designation (Word m, Bits 00 to 07)

Designate the area in CPU Unit memory to be used for setting operating data. The following settings are available.

00: DM Area Words Allocated to Special I/O Units
Memory from the area allocated to Special I/O Units in the CPU Unit's DM Area will be allocated according to the unit number set for the PCU. The following words will be allocated consecutively to common parameters and axis parameters.

NC1□3: m+32 to m+55
NC2□3: m+60 to m+99
NC4□3: m+116 to m+187

0D: User-specified DM Area Words
Words within the DM Area starting from the beginning word specified in word m+1 will be allocated.

0E: User-specified EM Area Words
Words within the EM Area starting from the beginning word specified in word m+1 will be allocated. Specify the bank number in the bank designation setting (word m, bits 08 to 15).

Bank Designation (Word m, Bits 08 to 15)

If user-specified EM Area words (0E) are designated as the location for the operating data area using the area designation setting (word m, bits 00 to 07), use this setting to designate a bank number. The following bank numbers can be designated: 0 (00) to 9 (09), A (0A), B (0B), C (0C). Do not, however, select a bank that is being used as PLC file memory. If the DM Area words allocated to Special I/O Units (00) or user-specified DM Area words (0D) are designated as the location of the operating memory area, set the bank designation to 0 (00). Any other setting will result in an operating data area specification error (error code 0010).

Note Do not set a bank number for a bank that is being used as PLC file memory. If a bank that is being used as PLC file memory is set, the operating data area settings will not be reflected in PCU operation and this will result in malfunction. When there are several PCUs mounted to the same PLC, be sure to set the operating data areas for the PCUs so that they do not overlap with each other. The PCU will not detect an error if operating data areas overlap, and this may result in malfunction.

For details on the EM Area banks and how to use them as PLC file memory, refer to the *SYSMAC CS/CJ Series Programmable Controllers Programming Manual* (W394).

Beginning Word of Operating Data Area (Word m+1)

If user-specified DM Area words (0D) or user-specified EM Area words (0E) are designated as the location for the operating data area using the area designation setting (word m, bits 00 to 07), use this setting to designate the beginning word of the operating data area. The beginning word is set in hexadecimal. The following settings are possible (varies with the model):

NC1□3: 0000 to 7FE8 Hex (0 to 32744)
NC2□3: 0000 to 7FD8 Hex (0 to 32728)
NC4□3: 0000 to 7FB8 Hex (0 to 32696)

If DM Area words allocated to Special I/O Units (00) are designated as the location for the operating data area, this setting will not be used.

Example 1

m	0	0	0	D
m+1	1	F	4	0

The area in the CPU Unit's DM Area beginning with word 1F40 Hex (8000) is designated as the operating data area. The following words are allocated (varies with the model):

NC1□3:D8000 to D8023
NC2□3:D8000 to D8039
NC4□3:D8000 to D8071

Example 2

m	0	2	0	E
m+1	3	A	9	8

The area in bank 2 of the CPU Unit's EM Area beginning with word 3A98 Hex (15000) is designated as the operating data area. The following words are allocated (varies with the model):

NC1□3: E2_15000 to E2_15023
NC2□3: E2_15000 to E2_15039
NC4□3: E2_15000 to E2_15071

Axis Parameter Designation

Word Address and Enable Timing

The word address and enable timing for the axis parameter designation setting is shown below.

Word			Name	Enable timing
NC1□3	NC2□3	NC4□3		
m+2			Axis parameter designation	At power up or restart

Bit Configuration

The bit configuration for the word address in the above table is shown below.

	15 – 12	11 – 08	07 – 00
m+2	Specified unused axes	Axis designation	Parameter designation

Settings

The following settings are available.

Word m+2: 0X00, 0X01 (X = 0 to 9, A to F)

Explanation

The meanings of each of the settings are given below.

Parameter Designation (Word m+2, Bits 00 to 07)

Specify the axis parameters to use during PCU operation. The following settings are available.

00: The PCU will operate according to the axis parameters saved in the PCU's flash memory.

01: The PCU will operate according to the axis parameters set in the DM Area words allocated to Special I/O Units (m+4 onwards).

Axis Designation (Word m+2, Bits 08 to 11)

If DM Area words allocated to Special I/O Units (01) are designated as the location of axis parameters in the parameter designation setting (bits 00 to 07), use this setting to designate the axes to be set from the DM Area.

11	10	09	08
U axis designation	Z axis designation	Y axis designation	X axis designation

On PCUs with unit version 2.1 or later, setting is not required for axes specified as unused in the unused axis setting.

The meanings of the individual axis settings are as follows:

0: The axis parameter settings in the DM Area words allocated to Special I/O Units will be used.

1: The default axis parameter settings will be used. The settings in the DM Area words allocated to Special I/O Units will not be used.

If the PCU's flash memory (00) is designated as the location of the axis parameters in the parameter designation setting, the above settings will not be used.

When using a 1-axis or 2-axis PCU, set 0 for the other axes (i.e., those not controlled by the PCU). Setting to a value other than 0 will result in a parameter designation error (error code 0013).

Note The settings in the DM Area words allocated to Special I/O Units will not be used for any axes that are set to 1. This means that when control is not required for all axes (e.g., when a 4-axis PCU is used to control 3 axes), if uncontrolled axes are set to 1, there is no need to make settings for those axes in the DM Area.

Specified Unused Axes (Word m+2, Bits 12 to 15; Supported for Unit Version 2.1 or Later)

This parameter is used to specify unused axes. Parameter setting and wiring (e.g., CW, CCW, and emergency stop) are not required for the specified unused axes.

Setting	1-axis Unit	2-axis Unit	4-axis Unit
00	All axes used.	All axes used.	All axes used.
01	Error 0013 occurs.	Axis Y not used.	Axis U not used.
02	Error 0013 occurs.	Error 0013 occurs.	Axes Z and U not used.
03	Error 0013 occurs.	Error 0013 occurs.	Axes Y, Z, and U not used.

Example 1

m+2	0	0	0	0

The PCU will operate according to the axis parameters saved in the PCU's flash memory.

Example 2

m+2	0	A	0	1	(when using a 4-axis PCU)

Operation for the X and Z axes will be performed according to the axis parameters set in the following DM Area words allocated to Special I/O Units.

X-axis parameter area: words m+4 to m+31
Z-axis parameter area: words m+60 to m+87

The default settings will be used for the Y and U axes.

4-3 Axis Parameter Area

The axis parameters are used for settings that include the pulse output type, input signal logic, and operation modes for axes subject to PCU control.

4-3-1 Outline

The axis parameter settings used will be selected from the following, according to the common parameter settings.

- The axis parameters saved in the PCU's non-volatile (flash) memory (when 00 is set for the parameter designation (word m+2, bits 00 to 07) in the common parameters)
- The axis parameters set in the DM Area words allocated to Special I/O Units
  (for axes for which the axis specification (word m+2, bits 08 to 11) is set to 0 when 01 is set for the parameter designation (m+2, bits 00 to 07) in the common parameters)
- The default axis parameters
  (for axes for which the axis specification (word m+2, bits 08 to 11) is set to 1 when 01 is set for the parameter designation (m+2, bits 00 to 07) in the common parameters)

The axis parameters are read into the PCU's internal memory at power up or restart. Also, by using data transfer, changes in the axis parameters other than the I/O settings and the operation mode can be reflected in subsequent operating commands.

When the axis parameters are set from the DM Area words allocated to Special I/O Units, the setting area (i.e., the axis parameter area) will follow on from the area used for the common parameters. The beginning word will depend on the unit number set for the PCU in the way shown below.

Beginning word of axis parameter area = m+4 (where m = D20000 + 100 × unit number)

The following tables list the data set by the axis parameters. The tables give the memory allocations for when the axis parameters in the DM Area words allocated to Special I/O Units are used as well as the addresses in the PCU's internal memory used for data transfer. For details on data transfer, refer to *SECTION 5 Transferring and Saving Data*. The DM Area word allocations and the PCU's internal memory addresses are the same for all models. There are,

however, no Y, Z, or U-axis parameters when using 1-axis PCUs, and no Z or U-axis parameters when using 2-axis PCUs.

Word (PCU internal address)				Name	Configuration/Explanation	Page
NC1□3	NC2□3	NC4□3				
X axis	Y axis	Z axis	U axis			
m+4 (0004)	m+32 (0020)	m+60 (003C)	m+88 (0058)	I/O settings	Specifies the following items related to I/O: • Output pulse selection (CW/CCW output, pulse/direction output) • Contact types (N.O./N.C.) for limit input signal, origin proximity input signal, and origin input signal • Error counter reset output control when emergency stop signal is input • Origin undefined designation when emergency stop signal or limit signal is input	77
m+5 (0005)	m+33 (0021)	m+61 (003D)	m+89 (0059)	Operation mode selection	Sets the operation mode used for the motor driver and specifies the origin detection method.	79
m+6 (0006) m+7 (0007)	m+34 (0022) m+35 (0023)	m+62 (003E) m+63 (003F)	m+90 (004A) m+91 (005B)	Maximum speed (rightmost word) (leftmost word)	Specifies the maximum speed for each of the axes.	82
m+8 (0008) m+9 (0009)	m+36 (0024) m+37 (0025)	m+64 (0040) m+65 (0041)	m+92 (005C) m+93 (005D)	Initial speed (rightmost word) (leftmost word)	Specifies the initial speed for each of the axes.	83
m+10 (000A) m+11 (000B)	m+38 (0026) m+39 (0027)	m+66 (0042) m+67 (0043)	m+94 (005E) m+95 (005F)	Origin search high speed (rightmost word) (leftmost word)	Specifies the origin search high speed for each of the axes.	83
m+12 (000C) m+13 (000D)	m+40 (0028) m+41 (0029)	m+68 (0044) m+69 (0045)	m+96 (0060) m+97 (0061)	Origin search proximity speed (rightmost word) (leftmost word)	Specifies the origin search proximity speed for each of the axes.	84
m+14 (000E) m+15 (000F)	m+42 (002A) m+43 (002B)	m+70 (0046) m+71 (0047)	m+98 (0062) m+99 (0063)	Origin compensation value (rightmost word) (leftmost word)	Specifies the amount of compensation after the origin input signal is detected by an origin search operation.	84
m+16 (0010)	m+44 (002C)	m+72 (0048)	m+100 (0064)	Backlash compensation	Specifies the number of pulses output for backlash compensation.	85
m+17 (0011) m+18 (0012)	m+45 (002D) m+46 (002E)	m+73 (0049) m+74 (004A)	m+101 (0065) m+102 (0066)	Backlash compensation speed (rightmost word) (leftmost word)	Specifies the speed for outputting the backlash compensation.	86

Word (PCU internal address)				Name	Configuration/Explanation	Page
NC1□3	NC2□3	NC4□3				
X axis	Y axis	Z axis	U axis			
m+19 (0013)	m+47 (002F)	m+75 (004B)	m+103 (0067)	Acceleration/Deceleration curve, acceleration/deceleration time designations	Specifies the curve to be used for acceleration and deceleration (trapezoid/S-curve). Specifies the acceleration/deceleration time as either of the following: • Specifies the time required to reach the maximum speed from the initial speed of each axis. • Specifies the time required to reach the target speed from the initial speed of each axis.	86
m+20 (0014) m+21 (0015)	m+48 (0030) m+49 (0031)	m+76 (004C) m+77 (004D)	m+104 (0068) m+105 (0069)	Origin search acceleration time (rightmost word) (leftmost word)	Specifies the time taken to go from initial speed to maximum speed during origin search.	90
m+22 (0016) m+23 (0017)	m+50 (0032) m+51 (0033)	m+78 (004E) m+79 (004F)	m+106 (006A) m+107 (006B)	Origin search deceleration time (rightmost word) (leftmost word)	Specifies the time taken to go from maximum speed to initial speed.	91
m+24 (0018)	m+52 (0034)	m+80 (0050)	m+108 (006C)	Positioning monitor time	Specifies the time to monitor for the positioning completed signal from the motor driver when positioning has been completed.	92
m+25 (0019) m+26 (001A)	m+53 (0035) m+54 (0036)	m+81 (0051) m+82 (0052)	m+109 (006D) m+110 (006E)	CCW software limit (rightmost word) (leftmost word)	Specifies the CCW software limit.	92
m+27 (001B) m+28 (001C)	m+55 (0037) m+56 (0038)	m+83 (0053) m+84 (0054)	m+111 (006F) m+112 (0070)	CW software limit (rightmost word) (leftmost word)	Specifies the CW software limit.	
m+29 (001D)	m+57 (0039)	m+85 (0055)	m+113 (0071)	Reserved for PCU	Set to 0.	---
m+30 (001E)	m+58 (003A)	m+86 (0056)	m+114 (0072)	Reserved for PCU	Set to 0.	---
m+31 (001F)	m+59 (003B)	m+87 (0057)	m+115 (0073)	Initial pulse designation	Specifies the speed of the first pulse after operation starts.	93

4-3-2 Details

I/O Settings

Word Address and Enable Timing

The word address and enable timing for the I/O settings are shown below.

Word (PCU internal address)				Name	Enable timing
NC1□3	NC2□3	NC4□3			
X axis	Y axis	Z axis	U axis		
m+4 (0004)	m+32 (0020)	m+60 (003C)	m+88 (0058)	I/O settings	At power up or restart

Bit Configuration

The bit configurations for the word addresses in the above table are shown below.

15							08	04			00
0	0	0	0	0	0	0	I/O settings	0	0	0	0

Default Setting

The default setting for I/O settings is 0060.

Explanation

These settings specify the output pulse selection, the limit input signal contacts, and so on. The meanings of each of the settings are given below.

Bits	Settings
00	Output pulse selection: Specifies the pulse method for outputs. 0: CW/CCW output; 1: pulse/direction output
01	CW/CCW pulse output direction selection (supported for unit version 2.2 or later) The direction of the CW/CCW pulse output can be switched. This is useful for applications using the same wiring but reversed coordinate systems. The following operations are performed using the combinations of output pulse selection.

CW/CCW pulse output direction selection (bit 01)	Output pulse selection (bit 00)	
	0: CW/CCW outputs	1: Pulse/direction outputs
0	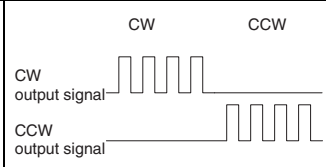	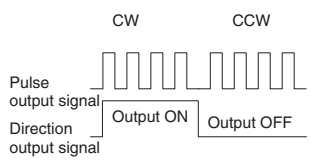
1	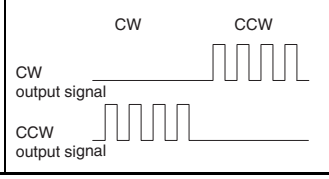	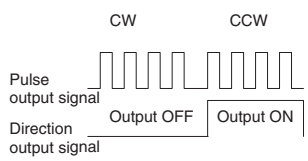

Note The CW output signal, CCW output signal, pulse output signal, and direction output signal are names of connector signals.

02 to 03	Not used

Bits	Settings
04	Limit input signal type: Specifies the limit input signal contact. 0: N.C. input; 1: N.O. input
05	Origin proximity input signal type: Specifies the origin proximity input signal contact. 0: N.C. input; 1: N.O. input
06	Origin input signal type: Specifies the origin input signal contact. 0: N.C. input; 1: N.O. input
07	Emergency stop input: Specifies the operation for when the emergency stop signal is input. 0: Only stop pulse output. 1: Stop pulse output and output the error counter reset signal (enabled for operation modes 1 and 2).
08	Origin undefined designation: This setting specifies whether or not the origin will be undefined when an emergency stop signal, CWW limit signal, or CW limit signal is input. 0: Stop pulse output and retain prior status. 1: Stop pulse output and forcibly change to origin undefined status.
09 to 15	Not used

The PCU constantly outputs the ON/OFF status of the input signals for each of the axes to the operating memory area. The following table shows the correspondence between these signals and the parameter settings.

Input signal	Signal contact	Status of I/O signal	
		Sensor energized (open)	Sensor not energized (closed)
CW/CCW limit input signal	N.C. (parameter set to 0)	1	0
	N.O. (parameter set to 1)	0	1
Origin proximity input signal	N.C. (parameter set to 0)	1	0
	N.O. (parameter set to 1)	0	1
Origin input signal	N.C. (parameter set to 0)	1	0
	N.O. (parameter set to 1)	0	1
Interrupt input signal	N.O. (no parameter)	0	1
Emergency stop input signal	N.C. (no parameter)	1	0
Positioning completed input signal	N.O. (no parameter)	0	1

Note Signal Contacts
N.C. contact: Normally in the energized state, turned “ON” by de-energizing.
N.O. contact: Normally in the de-energized state, turned “ON” by energizing.

Example

0	0	6	0	(default setting)

- Output pulse method: CW/CCW output
- Limit input signal type: N.C. contact
- Origin proximity input signal type: N.O. contact
- Origin input signal type: N.O. contact

- Emergency stop input: Only stop pulse output.
- Origin undefined designation: Stop pulse output and retain prior status.

Operation Mode Selection

Word Address and Enable Timing

The word address and enable timing for the operation mode selection settings are shown below.

Word (PCU internal address)				Name	Enable timing
NC1□3	NC2□3	NC4□3			
X axis	Y axis	Z axis	U axis		
m+5 (0005)	m+33 (0021)	m+61 (003D)	m+89 (0059)	Operation mode selection	With operation command

Bit Configuration

The bit configuration for the word addresses in the above table is shown below.

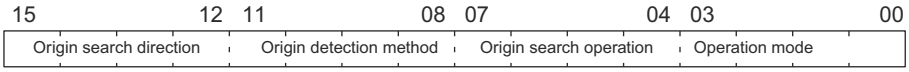

Default Setting

The default setting for operation mode selection is 0000.

Explanation

The data set in this word specifies the operation mode and the origin detection method. The meanings of each of the settings are given below.

Bits 00 to 03: Operation Mode Selection

Set the operation mode according to the motor driver and signal lines that are used.

Setting	Explanation
0 (Mode 0)	Uses stepping motor, and uses external sensor signal as origin input signal. In this mode, the error counter reset output and origin adjustment command output can be used as general-purpose outputs.
1 (Mode 1)	Uses Servo Drive, and uses encoder's Z-phase signal for origin input signal. Does not use positioning completed signal.
2 (Mode 2)	Same as Mode 1, but uses Servo Drive's positioning completed signal.
3 (Mode 3)	Uses a Servo Drive with an origin adjustment function. Origin search is completed by Servo Drive's origin adjustment command. Uses positioning completed signal.

Default setting: 0000

Bit 04 to 07: Origin Search Operation

This setting specifies the origin search operation.

Setting	Explanation
0	Reverse mode 1 Always detects origin in designated origin search direction. Reverses at limit input.
1	Reverse mode 2 Always detects origin in designated origin search direction. Error stop at limit input.

Setting	Explanation
2	Single-direction mode Detects origin while operating in designated origin search direction. (Does not reverse.) Error stop at limit input for designated origin search direction.
3	Reverse mode 3 (supported for unit version 2.2 or later) Basic functions are the same as with reverse mode 2. When the direction is reversed at the origin proximity input signal, however, the origin search operation will continue at the origin search proximity speed until the origin input signal. (In reverse mode 2, when the direction is reversed at the origin proximity input signal, operation continues by accelerating toward the origin search high speed.) Use this mode to reduce shock to mechanical systems.

Bit 08 to 11: Origin Detection Method

This setting specifies the origin detection method.

Setting	Explanation
0	Takes origin input signal after origin proximity input signal turns ON (↑) and OFF (↓).
1	Takes origin input signal after origin proximity input signal turns ON (↑).
2	Takes origin input signal without using origin proximity input signal.
3	Takes origin input signal after limit input signal turns ON (↑) and OFF (↓), or OFF (↓), without using origin proximity input signal. (Enabled only for single-direction mode.)

Bit 12 to 15: Origin Search Direction

This setting specifies the direction for detecting the origin input signal during an origin search.

Setting	Explanation
12	Origin search direction Use to specify the direction for detecting the origin input signal during an origin search. 0: CW, 1: CCW
13	Origin search preset (supported for unit version 2.2 or later) After the origin search has been executed and successfully completed, the present position can be set to any position. 0: Not set (default). Same function as previously. 1: Set. Set the position where the origin signal was detected to any desired position. The desired position is set in advance in the position parameter in the operating data area (for one axis, words l + 8 and l + 9).
14 to 15	Not used.

4-3-3 Operation Modes

The four operation modes are described below. The following abbreviations are used in the wiring diagrams:

DCRI: Error counter reset input
DCRO: Error counter reset output
IC: Input common
OACI: Origin adjustment command input
OACO: Origin adjustment command output
OPI: Origin proximity input
OS: Origin input signal
PCSI: Positioning completed signal input
PCSO: Positioning completed signal output

PCU: Position Control Unit
SMD: Stepping motor driver

Mode 0

Set mode 0 when using a stepping motor driver. A sensor is connected to the origin input signal (connector pin numbers A14/A15 and B14/B15). The response time for the origin input signal is 0.1 ms. (N.O. contact setting)

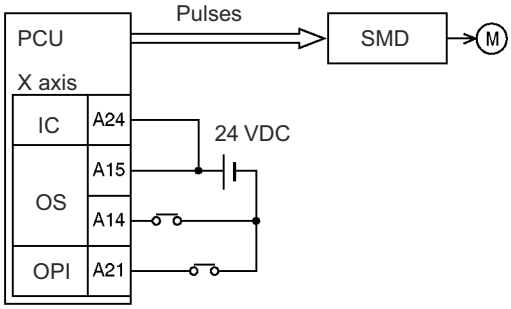

Mode 1

Set mode 1 when using a Servo Drive and connecting a line driver input and a error counter reset output without using a positioning completed signal. The response time for the origin line driver input is 0.1 ms. (N.O. contact setting)

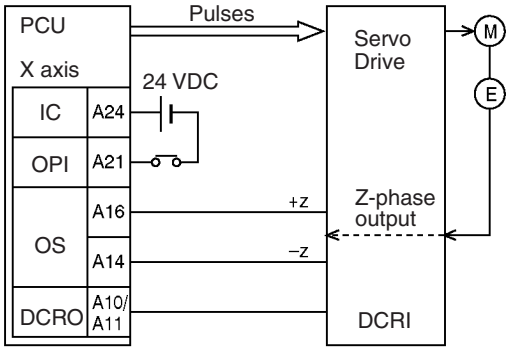

Mode 2

Set mode 2 when using a Servo Drive and connecting a line driver input and a error counter reset output just as in mode 1, but when also using a positioning completed signal.

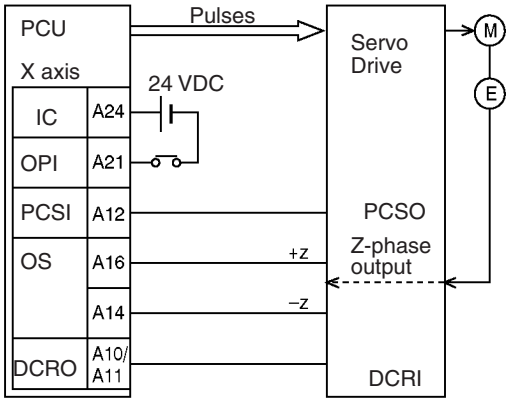

Mode 3

Set mode 3 when using the Servo Drive's origin adjustment command.

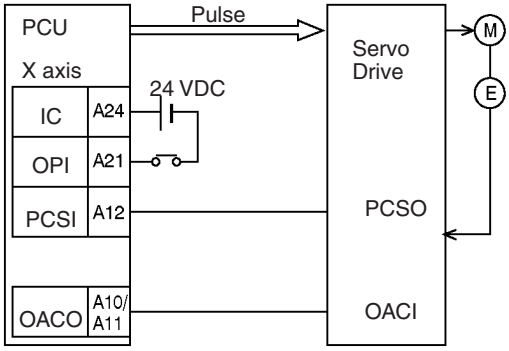

For details on operation mode settings, refer to *6-4 Origin Search Operation*.

Note In the wiring examples for modes 1 to 2, an OMRON R88D Servo Drive is used. Set the Servo Drive so that the Servo Drive's positioning completed signal is OFF during motor operation and ON while the motor is stopped. If this setting is not made, positioning may become impossible without the positioning completed signal in the operating memory area turning ON.

Maximum Speed

Word Address and Enable Timing

The word address and enable timing for the maximum speed setting is shown below.

Word (PCU internal address)				Name	Enable timing
NC1□3	NC2□3	NC4□3			
X axis	Y axis	Z axis	U axis		
m+6 (0006)	m+34 (0022)	m+62 (003E)	m+90 (005A)	Maximum speed (rightmost word)	With operating command
m+7 (0007)	m+35 (0023)	m+63 (003F)	m+91 (005B)	Maximum speed (leftmost word)	

Bit Configuration

The bit configuration for the word addresses in the above table is shown below.

15 00	15 00
Maximum speed (leftmost word) (Hex)	Maximum speed (rightmost word) (Hex)

Settings

The maximum speed can be set to any value in the following range:

00000001 to 0007A120 Hex (1 to 500,000 pps)

The default setting is 0007A120 (500,000).

Explanation

This setting specifies the maximum speed (in pps units) that can be output by the PCU for each axis. The maximum speed is set in the range 1 to 500,000 pps using two words (the leftmost word and the rightmost word) as 32-bit unsigned data. If a speed that exceeds this setting is designated during memory operation or direct operation, the axis will be operated at the maximum speed that is set here.

Note An error such as a speed data error (error codes 1500 to 1599) will be generated if the initial speed, origin search high speed, origin search proximity speed, or backlash compensation speed is set higher than the maximum speed set here.

Initial Speed

Word Address and Enable Timing

The word address and enable timing for the initial speed setting is shown below.

Word (PCU internal address)				Name	Enable timing
NC1□3	NC2□3	NC4□3			
X axis	Y axis	Z axis	U axis		
m+8 (0008)	m+36 (0024)	m+64 (0040)	m+92 (005C)	Initial speed (right-most word)	With operating command
m+9 (0009)	m+37 (0025)	m+65 (0041)	m+93 (005D)	Initial speed (left-most word)	

Bit Configuration

The bit configuration for the word addresses in the above table is shown below.

15 … 00	15 … 00
Initial speed (leftmost word) (Hex)	Initial speed (rightmost word) (Hex)

Settings

The initial speed can be set to any value in the following range:

00000000 to 0007A120 Hex (0 to 500,000 pps)

The default setting is 00000000 (0).

Explanation

This setting specifies the initial speed (in pps units) for each axis. The initial speed is set in the range 0 to 500,000 pps using two words (the leftmost word and the rightmost word) as 32-bit unsigned data.

Origin Search High Speed

Word Address and Enable Timing

The word address and enable timing for the origin search high speed setting is shown below.

Word (PCU internal address)				Name	Enable timing
NC1□3	NC2□3	NC4□3			
X axis	Y axis	Z axis	U axis		
m+10 (000A)	m+38 (0026)	m+66 (0042)	m+94 (005E)	Origin search high speed (rightmost word)	With origin search operation command
m+11 (000B)	m+39 (0027)	m+67 (0043)	m+95 (005F)	Origin search high speed (leftmost word)	

Bit Configuration

The bit configuration for the word addresses in the above table is shown below.

15 … 00	15 … 00
Origin search proximity speed (leftmost word) (Hex)	Origin search proximity speed (rightmost word) (Hex)

Settings

The origin search high speed can be set to any value in the following range:

00000001 to 0007A120 Hex (1 to 500,000 pps)

The default setting is 000061A8 (25,000).

Explanation

This setting specifies the origin search speed (in pps units) until the origin proximity input signal is received. The origin search high speed is set in the range 1 to 500,000 pps using two words (the leftmost word and the rightmost word) as 32-bit unsigned data. For details on origin search operation, refer to *6-4 Origin Search Operation*.

Origin Search Proximity Speed

Word Address and Enable Timing

The word address and enable timing for the origin search proximity speed setting is shown below.

Word (PCU internal address)				Name	Enable timing
NC1□3	NC2□3	NC4□3			
X axis	Y axis	Z axis	U axis		
m+12 (000C)	m+40 (0028)	m+68 (0044)	m+96 (0060)	Origin search proximity speed (rightmost word)	With origin search operation command
m+13 (000D)	m+41 (0029)	m+69 (0045)	m+97 (0061)	Origin search proximity speed (leftmost word)	

Bit Configuration

The bit configuration for the word addresses in the above table is shown below.

15 00	15 00
Origin search proximity speed (leftmost word) (Hex)	Origin search proximity speed (rightmost word) (Hex)

Settings

The origin search proximity speed can be set to any value in the following range:

00000001 to 0007A120 Hex (1 to 500,000 pps)

The default setting is 000009C4 (2,500).

Explanation

This setting specifies the origin search speed (in pps units) until the origin input signal is received. The origin search proximity speed is set in the range 1 to 500,000 pps using two words (the leftmost word and the rightmost word) as 32-bit unsigned data. For details on origin search operation, refer to *6-4 Origin Search Operation*.

Note Be sure to set the origin search proximity speed so that it is lower than the origin search high speed. If the origin search proximity speed is set equal to or higher than the origin search high speed, an origin search speed error (error code 1603) will be generated.

Origin Compensation Value

Word Address and Enable Timing

The word addresses and enable timing for the origin compensation value setting are shown below.

Word (PCU internal address)				Name	Enable timing
NC1□3	NC2□3	NC4□3			
X axis	Y axis	Z axis	U axis		
m+14 (000E)	m+42 (002A)	m+70 (0046)	m+98 (0062)	Origin compensation value (rightmost word)	With origin search operation command
m+15 (000F)	m+43 (002B)	m+71 (0047)	m+99 (0063)	Origin compensation value (leftmost word)	

Bit Configuration

The bit configuration for the word addresses in the above table is shown below.

15 … 00	15 … 00
Origin compensation value (leftmost word) (Hex)	Origin compensation value (rightmost word) (Hex)

Settings

The origin compensation value can be set to any value in the following range:

C0000001 to 3FFFFFFF Hex (±1,073,741,823 pulses)

The default setting is 00000000 (0).

Explanation

This setting specifies the amount of compensation (in pulse units) after the origin input signal is detected by an origin search operation. The origin compensation value is set in the range –1,073,741,823 to 1,073,741,823 pulses using two words (the leftmost word and the rightmost word) as 32-bit signed data. If the compensation is set to anything other than 0, the axis will be moved at the origin search proximity speed for the set amount of compensation after the origin input signal is detected. For details on origin compensation operation, refer to *SECTION 6 Defining the Origin*.

Backlash Compensation

Word Address and Enable Timing

The word address and enable timing for the backlash compensation is shown below.

Word (PCU internal address)				Name	Enable timing
NC1□3	NC2□3	NC4□3			
X axis	Y axis	Z axis	U axis		
m+16 (0010)	m+44 (002C)	m+72 (0048)	m+100 (0064)	Backlash compensation	With operating command

Bit Configuration

The bit configuration for the word addresses in the above table is shown below.

15 … 00
Backlash compensation (Hex)

Settings

The backlash compensation can be set to any value in the following range:

0000 to 270F Hex (0 to 9,999 pulses)

The default setting is 0000 (0).

Explanation

This setting specifies the amount of backlash compensation (in pulse units). The backlash compensation is set in the range 0 to 9,999 pulses as 16-bit unsigned data. If the backlash compensation is set to anything other than 0, backlash compensation will be performed by outputting the set number of pulses at the backlash compensation speed. For details on backlash compensation operation, refer to *9-8 Backlash Compensation*.

Backlash Compensation Speed

Word Address and Enable Timing

The word addresses and enable timing for the backlash compensation speed setting are shown below.

Word (PCU internal address)				Name	Enable timing
NC1□3	NC2□3	NC4□3			
X axis	Y axis	Z axis	U axis		
m+17 (0011)	m+45 (002D)	m+73 (0049)	m+101 (0065)	Backlash compensation speed (rightmost word)	With operating command
m+18 (0012)	m+46 (002E)	m+74 (004A)	m+102 (0066)	Backlash compensation speed (leftmost word)	

Bit Configuration

The bit configuration for the word addresses in the above table are shown below.

15 … 00	15 … 00
Backlash compensation speed (leftmost word) (Hex)	Backlash compensation speed (rightmost word) (Hex)

Settings

The backlash compensation speed can be set to any speed in the following range:

00000000 to 0007A120 Hex (0 to 500,000 pps)

The default setting is 00000000 (0).

Explanation

This setting specifies the speed for outputting the backlash compensation (in pps units). The backlash compensation speed is set in the range 0 to 500,000 pps using two words (the leftmost word and the rightmost word) as 32-bit unsigned data. If the backlash compensation is set to anything other than 0, and the backlash compensation speed is set to 0, backlash will be performed at the initial speed or 250 pps, whichever is the greater. For details on backlash compensation operation, refer to *9-8 Backlash Compensation*.

Acceleration/Deceleration Curve and Acceleration/Deceleration Time Designations

Word Address and Enable Timing

The word address and enable timing for the acceleration/deceleration curve and acceleration/deceleration time designation settings are shown below.

Word (PCU internal address)				Name	Enable timing
X axis	Y axis	Z axis	U axis		
m+19 (0013)	m+47 (002F)	m+75 (004B)	m+103 (0067)	Acceleration/deceleration curve Acceleration/deceleration time designations	With operating command

Bit Configuration

The bit configuration for the word addresses in the above table is shown below.

15 … 12	11 … 08	07 … 04	03 … 00
0	0	Acceleration/deceleration time designations	Acceleration/deceleration curve

Settings

0000, 0001, 0010, or 0011

The default setting is 0000.

Explanation

Bits 00 to 03

Acceleration/Deceleration Curve

These bits specify the curve to be used for acceleration and deceleration.

The acceleration/deceleration curve can be set to either a trapezoid or S-curve using the following settings.

0: Trapezoid
1: S-curve

Bits 04 to 07

Acceleration/Deceleration Time Designations

These bits specify the method to be used to set the acceleration and deceleration times.

0: The acceleration and deceleration times are set as the time between the initial speed and the maximum speed parameters for each axis. These parameters, along with the acceleration time and deceleration time data, determine the slope of acceleration/deceleration that is used for axis operation. The slope is then used to determine the acceleration/deceleration time until the target speed is reached.

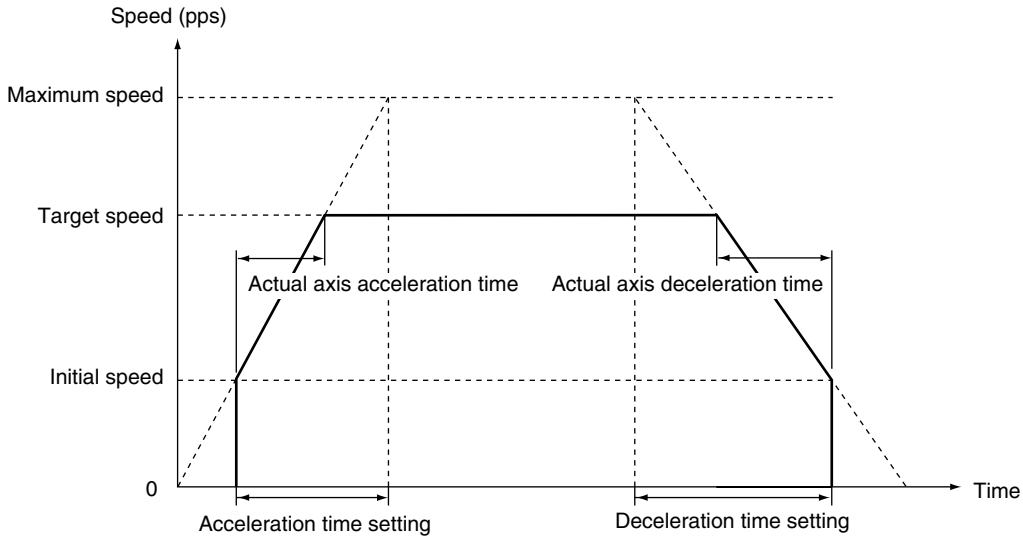

1: The acceleration and deceleration times are set as the time required to reach the target speed from the present speed.

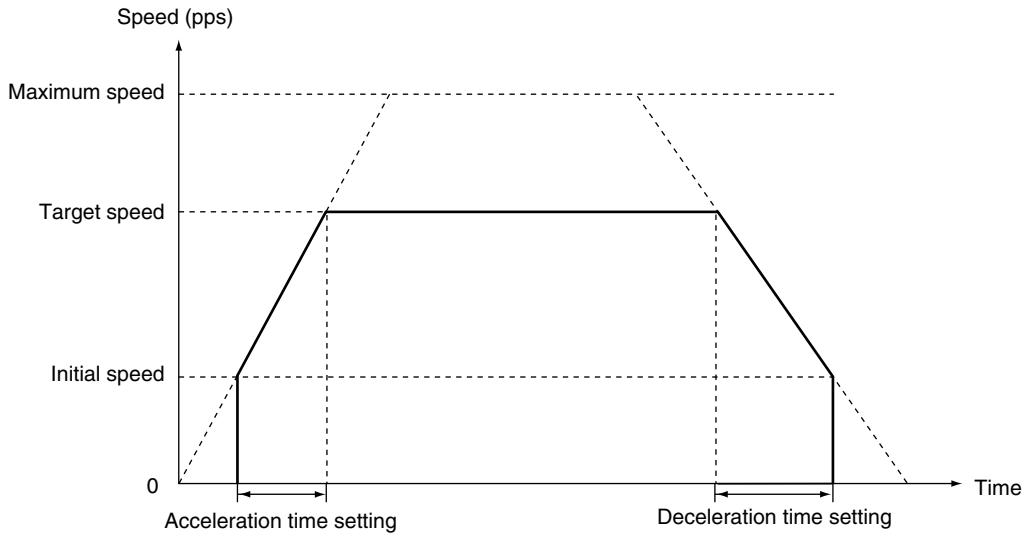

If the Acceleration/Deceleration Time Designation is set to 1, positioning may not reach the specified target speed. In this case, the target speed, acceleration time, and deceleration time are corrected as follows. This is called triangular control.

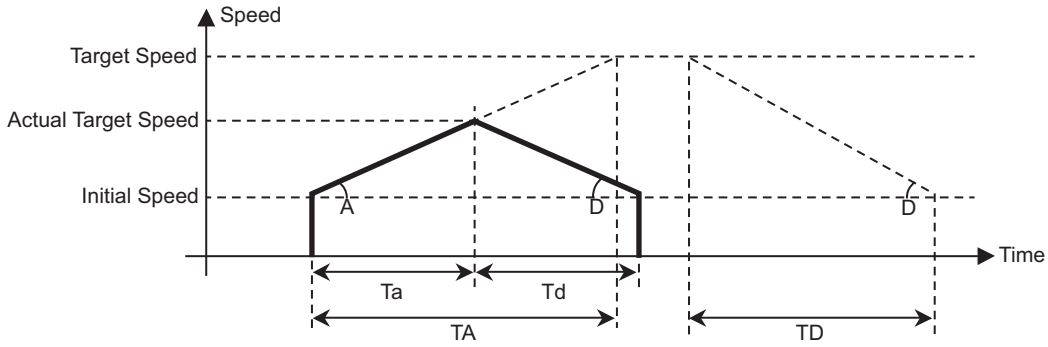

At Startup

TA: Acceleration time
Ta: Actual acceleration time
A: Acceleration rate

TD: Deceleration time
Td: Actual deceleration time
D: Rate of deceleration

If the Acceleration/Deceleration Time Designation is set to 1, deceleration stop due to deceleration stop relay or error occurs is performed in TD (deceleration time). Therefore, deceleration stop during triangular control may exceed the target position of the running operation. If you set the Acceleration/Deceleration Time Designation to 1, calculate the maximum stop distance and use it after ensuring safety. Also, be sure to install the limit input and use it after thorough debugging.

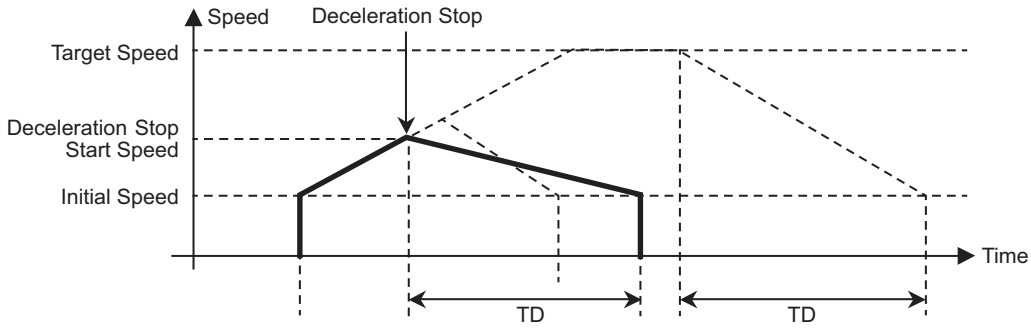

At Deceleration Stop
TD: Deceleration time

The acceleration and deceleration time data that is used for axis operation is determined by the operation executed as shown in the table below.

Axis operation	Data used for acceleration/deceleration time (in setting area)
Origin search	Origin search acceleration time and origin search deceleration time (axis parameters)
Direct operation (absolute/relative movements, interrupt feeding), jogging, and origin returns	Acceleration time and deceleration time (operating data area)
Memory operation	Acceleration times and deceleration times (numbers 1 to 9) (memory operation data saved in the PCU) If acceleration or deceleration time number 0 is set for, however, the origin search acceleration/deceleration time in the axis parameters will be used.

S-curve

With S-curve acceleration/deceleration, the acceleration/deceleration rate changes with time. If a smaller initial acceleration/deceleration rate is desired, the amount of mechanical vibration can be reduced using the S-curve setting and increasing the acceleration/deceleration rate. This is possible, however, only as long as the maximum acceleration/deceleration rate is not exceeded.

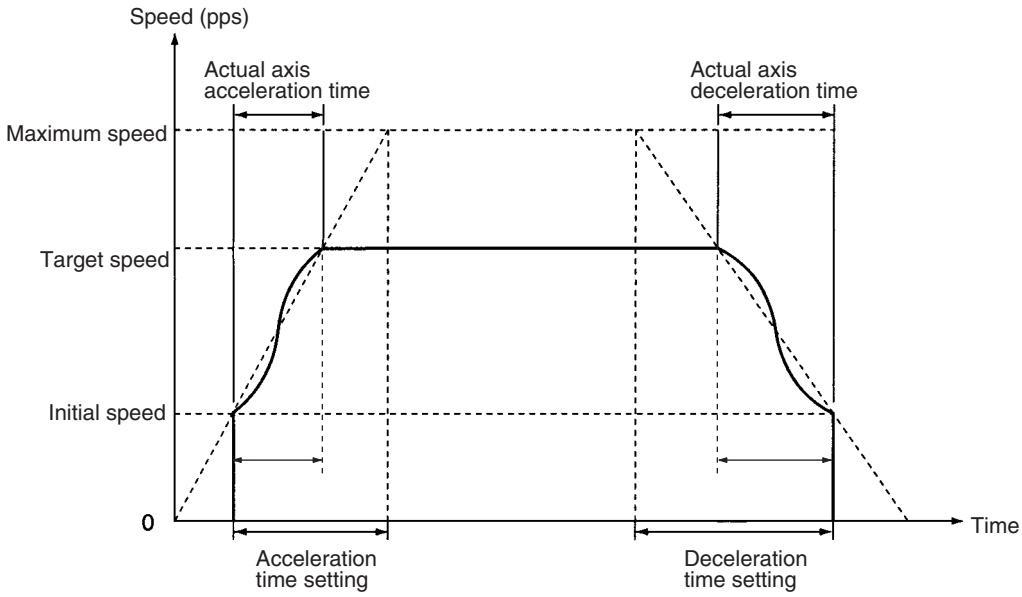

The S-curve used for the PCU is the tertiary curve that joins the initial speed and the target speed. If an S-curve is used, the maximum acceleration/deceleration will be 1.5 times that of the trapezoidal curve with the same acceleration/deceleration time.

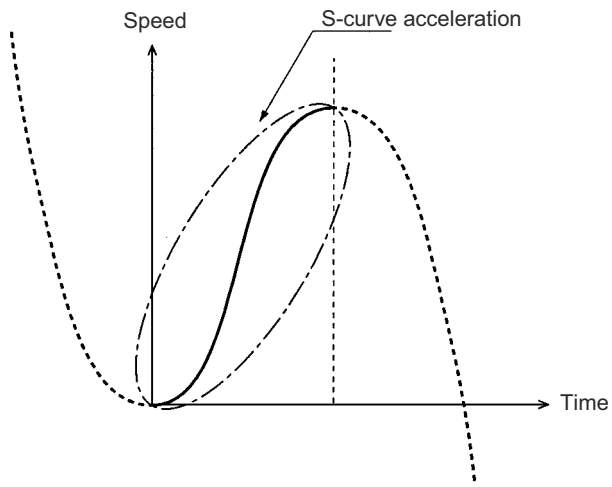

Origin Search Acceleration Time

Word Address and Enable Timing

The word addresses and enable timing for the origin search acceleration time setting are shown below.

Word (PCU internal address)				Name	Enable timing
NC1□3	NC2□3	NC4□3			
X axis	Y axis	Z axis	U axis		
m+20 (0014)	m+48 (0030)	m+76 (004C)	m+104 (0068)	Origin search acceleration time (rightmost word)	With origin search operation command (memory operation operating command)
m+21 (0015)	m+49 (0031)	m+77 (004D)	m+105 (0069)	Origin search acceleration time (leftmost word)	

Bit Configuration

The bit configuration for the word addresses in the above table is shown below.

15 00	15 00
Origin search acceleration time (leftmost word) (Hex)	Origin search acceleration time (rightmost word) (Hex)

Settings

The origin search acceleration time can be set to any time in the following range:

00000000 to 0003D090 Hex (0 to 250,000 ms)

The default setting is 00000064 (100).

Explanation

This setting specifies the time (in ms) taken to go from the initial speed to the maximum speed when performing origin search. The origin search acceleration time is set in the range 0 to 250,000 ms using two words (the leftmost word and the rightmost word) as 32-bit unsigned data. This acceleration is applied if acceleration time 0 is selected in memory operation. For details of the acceleration/deceleration settings, refer to the description of the acceleration/deceleration curve axis parameter on page 87.

Origin Search Deceleration Time

Word Address and Enable Timing

The word addresses and enable timing for the origin search deceleration time setting are shown below.

Word (PCU internal address)				Name	Enable timing
NC1□3	NC2□3	NC4□3			
X axis	Y axis	Z axis	U axis		
m+22 (0016)	m+50 (0032)	m+78 (004E)	m+106 (006A)	Origin search deceleration time (rightmost word)	With origin search operation command (memory operation operating command)
m+23 (0017)	m+51 (0033)	m+79 (004F)	m+107 (006B)	Origin search deceleration time (leftmost word)	

Bit Configuration

The bit configuration for the word addresses in the above table is shown below.

15 00	15 00
Origin search deceleration time (leftmost word) (Hex)	Origin search deceleration time (rightmost word) (Hex)

Settings

The origin search deceleration time can be set to any time in the following range:

00000000 to 0003D090 Hex (0 to 250,000 ms)

The default setting is 00000064 (100).

Explanation

This setting specifies the time (in ms) taken to go from the maximum speed to the initial speed when performing origin search. The origin search deceleration time is set in the range 0 to 250,000 ms using two words (the leftmost word and the rightmost word) as 32-bit unsigned data. This deceleration is applied if deceleration time 0 is selected in memory operation. For details of the acceleration/deceleration settings, refer to the description of the acceleration/deceleration curve axis parameter on page 87.

Positioning Monitor Time

Word Address and Enable Timing

The word addresses and enable timing for the positioning monitor time setting is shown below.

Word (PCU internal address)				Name	Enable timing
NC1□3	NC2□3	NC4□3			
X axis	Y axis	Z axis	U axis		
m+24 (0018)	m+52 (0034)	m+80 (0050)	m+108 (006C)	Positioning monitor time	With operating command

Bit Configuration

The bit configuration for the word addresses in the above table is shown below.

15	00
Positioning monitor time (Hex)	

Settings

The origin search positioning monitor time can be set to any time in the following range:

0000 to 270F Hex (0 to 9,999 ms)

The default setting is 270F (9,999).

Explanation

In operation mode 2 or 3 (using the motor driver's positioning completed signal), after positioning operation has been completed (i.e., after pulse output has been completed), the positioning completed signal will be monitored for the time specified here. If the motor driver's positioning completed signal does not turn ON within this time, a positioning timer timeout error (error code 8600) will be generated. The positioning monitor time is set in the range 0 to 9,999 ms as 16-bit unsigned data.

If the positioning monitor time is set to 0, operation will proceed in one of the following ways, depending on the kind of operation being performed.

- Origin search operation: Waits until positioning completed signal turns ON.
- Other operation (jogging, direct operation, etc.): Positioning completed signal ignored.

Software Limits

Word Address and Enable Timing

The word addresses and enable timing for the software limit settings are shown below.

Word (PCU internal address)				Name	Enable timing
NC1□3	NC2□3	NC4□3			
X axis	Y axis	Z axis	U axis		
m+25 (0019)	m+53 (0035)	m+81 (0051)	m+109 (006D)	CCW software limit (rightmost word)	With operating command
m+26 (001A)	m+54 (0036)	m+82 (0052)	m+110 (006E)	CCW software limit (leftmost word)	With operating command
m+27 (001B)	m+55 (0037)	m+83 (0053)	m+111 (006F)	CW software limit (rightmost word)	With operating command
m+28 (001C)	m+56 (0038)	m+84 (0054)	m+112 (0070)	CW software limit (leftmost word)	With operating command

Bit Configuration

The bit configurations for the word addresses in the above table are shown below.

15 … 00	15 … 00
CCW software limit (leftmost word) (Hex)	CCW software limit (rightmost word) (Hex)

15 … 00	15 … 00
CW software limit (leftmost word) (Hex)	CW software limit (rightmost word) (Hex)

Settings

The software limits can be set to any values in the following range:

C0000001 to 3FFFFFFF Hex (±1,073,741,823 pulses)

The default settings are C0000001 (–1,073,741,823) for the CCW software limit and 3FFFFFFF (1,073,741,823) for the CW software limit.

Explanation

These settings specify the CCW and CW software limits (in pulse units). The respective software limits are set in the range –1,073,741,823 to 1,073,741,823 pulses using two words (the leftmost word and the rightmost word) as 32-bit unsigned data. If the CW software limit is set to less than or equal to the CCW software limit, the software limit function be disabled and the present position will taken to be 0 when operation starts. For details on software limit operation, refer to *9-9 Software Limit*.

Pulse Designation

Word Address and Enable Timing

The word addresses and enable timing for the initial pulse designation are shown below.

Word (PCU internal address)				Name	Enable timing
NC1□3	NC2□3	NC4□3			
X axis	Y axis	Z axis	U axis		
m+31 (001F)	m+59 (003B)	m+87 (0057)	m+115 (0073)	Initial pulse designation	With operating command

Bit Configuration

The bit configuration for the word addresses in the above table is shown below.

15 … 00			
0	0	0	X (= 0 or 1)

Settings

The initial pulse designation can be set to either of the following:

0000: 250 pps
0001: Maximum speed specified with axis parameters

The default setting is 0000.

Explanation

This setting specifies the speed of the first pulse when operation starts. When axis operation starts, the speed of the first pulse based on the acceleration curve is calculated. If this speed is less than the speed specified with this parameter, the first pulse is automatically output with the speed specified here. This means that the time required until pulse output starts is reduced.

Note If the initial pulse speed is set to the maximum speed specified with axis parameters, set this maximum speed to a value less than the maximum input response frequency of the driver that runs the servomotor or the stepping motor. If it is set to a value greater than the maximum input response fre-

quency, then this will cause position errors (due to the driver miscounting pulses).

Example

The pulse output when performing jog operation with a parameter setting for maximum speed of 500 kpps (default setting), acceleration time set to 0 s, deceleration time set to 0 s, and speed set to 10 pps. The pulse-output waveforms are given for two cases: Case 1 is for when the initial pulse designation is set to 0 and case 2 is for when it is set to 1. Although, the time from the PCU receiving the startup instruction for jog operation from the CPU Unit until internal processing is performed will be the same for the two cases, the time for the first pulse will be reduced from 4 ms (250 pps) to 0.002 ms (500 kpps), in other words the time required will be reduced by just under 4 ms.

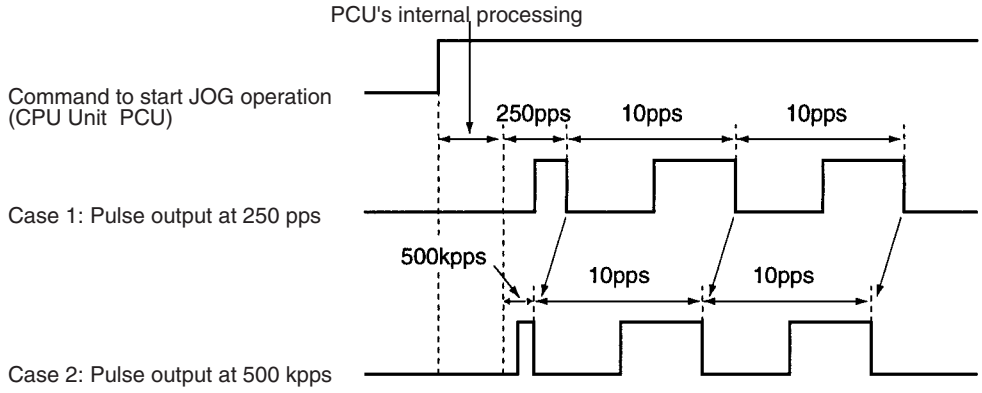

4-4 Operating Memory Area

The operating memory area is the area in the CIO Area allocated to the outputs used for sending commands to the PCU and the inputs used for monitoring PCU status.

4-4-1 Outline

The area allocated as the operating memory area is contained in the Special I/O Unit Area within the CPU Unit's CIO Area. The beginning word of the operating memory area is determined according to the unit number set for the PCU according to the following equation.

Beginning word of operating memory area, n = 2000 + 100 × unit number

The operating memory area is divided into outputs and inputs. Commands related to operations are allocated to the output memory area, and the commands are output to the Position Control Unit (PCU) when their respective bits are turned ON, or at the rising edge (↑) when the bits are turned ON. The PCU's status and the status of external I/O are input from the PCU to the operating memory area.

The memory allocation of the operating memory area is shown in the following table. For details such as operation timing, refer to the section for the relevant function.

Output

Model	Words				Bits	Name		Operation	Reference
	X axis	Y axis	Z axis	U axis					
NC4□3 NC2□3 NC1□3	n n n	n+2 n+2	n+4	n+6	00	Memory operation commands	Sequence Number Enable	In memory operation, this setting specifies whether the sequence number designated in the operating data area is enabled or disabled for beginning operation.	*SECTION 8 Memory Operation*
					01		START	At the rising edge (↑) when this bit turns ON, memory operation starts.	
					02		INDEPENDENT START	At the rising edge (↑) when this bit turns ON, memory operation starts. The completion code is treated as "terminating," except for when it is set to "bank end."	
					03	Direct operation commands	ABSOLUTE MOVEMENT	At the rising edge (↑) when this bit turns ON, direct operation is started with the position designated in the operating data area treated as an absolute position.	*SECTION 7 Direct Operation*
					04		RELATIVE MOVEMENT	At the rising edge (↑) when this bit turns ON, direct operation is started with the position designated in the operating data area treated as a relative position.	
					05		INTERRUPT FEEDING	At the rising edge (↑) when this bit turns ON, interrupt feeding begins for direct operation.	*9-3 Interrupt Feeding*
					06	Origin positioning commands	ORIGIN SEARCH	At the rising edge (↑) when this bit turns ON, an origin search is executed.	*SECTION 6 Defining the Origin*
					07		ORIGIN RETURN	At the rising edge (↑) when this bit turns ON, positioning returns to the origin.	
					08		PRESENT POSITION PRESET	At the rising edge (↑) when this bit turns ON, the present position is forcibly changed to the position set in the operating data area, and then the origin is established based on the changed present position.	
NC4□3 NC2□3 NC1□3	n n n	n+2 n+2	n+4	n+6	09	Commands for special functions	JOG (speed feeding)	When this bit turns ON, jogging (speed feeding) is executed.	*9-1 Jogging*
					10		Direction designation	This designates the direction for when JOG or INTERRUPT FEEDING are executed.	*9-3 Interrupt Feeding*
					11		TEACH	At the rising edge (↑) when this bit turns ON, the teaching operation is executed.	*9-2 Teaching*
					12		RELEASE PROHIBIT/ ERROR RESET	At the rising edge (↑) when this bit turns ON, the error status is cleared and the pulse output prohibition is released.	*11-6 Releasing Pulse Output Prohibition and Resetting After Errors*
					13		Error counter reset output/ origin-adjustment command output	When this bit turns ON, error counter reset output/origin-adjustment command output turns ON.	*9-7 Error Counter Reset Output and Origin Adjustment Command Output*
					14		Override enable	This bit enables or disables the override function.	*9-6 Override*
					15		STOP	At the rising edge (↑) when this bit turns ON, positioning is decelerated to a stop.	*9-5 Deceleration Stop*
NC4□3 NC2□3 NC1□3	n+1 n+1 n+1	n+3 n+3	n+5	n+7	00 to 07		Not used	---	---
					08		FORCED INTERRUPT	In memory operation, at the rising edge (↑) when this bit turns ON, forced interrupt is started.	*9-4 Forced Interrupt*
					09 to 11		Not used	---	---

Model	Words				Bits	Name		Operation	Reference
	X axis	Y axis	Z axis	U axis					
NC4□3 NC2□3 NC1□3	n+1 n+1 n+1	---	---	---	12	Data transfer commands	WRITE DATA	At the rising edge (↑) when this bit turns ON, data is written from the CPU Unit to the PCU.	*SECTION 5 Transferring and Saving Data*
					13		READ DATA	At the rising edge (↑) when this bit turns ON, data is read from the PCU to the CPU Unit.	
					14		SAVE DATA	At the rising edge (↑) when this bit turns ON, the contents of the PCU's internal memory are saved to its flash memory.	
					15		Not used	---	---

Input

Model	Words				Bits	Name		Operation	Reference
	X axis	Y axis	Z axis	U axis					
NC4□3 NC2□3 NC1□3	n+8 n+4 n+2	n+11 n+7	n+14	n+17	00 to 03	PCU status	Not used	---	---
					04		Waiting for memory operation	Turns ON during memory operation while waiting for operation to start.	*SECTION 8 Memory Operation*
					05		Positioning Completed Flag (see note 3.)	Turns ON when any of the following PCU operations (pulse output), made in response to a positioning command, are completed. Direct operation (ABSOLUTE MOVEMENT, RELATIVE MOVEMENT, INTERRUPT FEEDING), ORIGIN SEARCH, ORIGIN RETURN, memory operation (see note 1.)	
					06		No Origin Flag	ON when the origin is not established.	*SECTION 6 Defining the Origin*
					07		Origin Stop Flag	ON when stopped at the origin.	
					08		Zone 0 Monitor Flag	ON when within the zone 0 range.	*4-7 Zone Data Area*
					09		Zone 1 Monitor Flag	ON when within the zone 1 range.	
					10		Zone 2 Monitor Flag	ON when within the zone 2 range.	
					11		Teaching completed (see note 3.)	Turns ON when teaching is completed.	*9-2 Teaching*
					12		Error Flag (see note 3.)	Turns ON when an error occurs.	*SECTION 11 Troubleshooting*
					13		Busy Flag (see note 3.)	Turns ON during processing at the PCU. (see note 2.)	*SECTION 7 Direct Operation/SECTION 8 Memory Operation*
					14		Data Transferring Flag	Turns ON during data transfer operations.	*SECTION 5 Transferring and Saving Data*
					15		Deceleration Stop Execution Flag (see note 3.)	Turns ON when axis operation is stopped by an emergency stop input or a STOP command during axis operation.	*9-5 Deceleration Stop*

Model	Words				Bits	Name		Operation	Reference
	X axis	Y axis	Z axis	U axis					
NC4□3 NC2□3 NC1□3	n+9 n+5 n+3	n+12 n+8	n+15	n+18	00 to 07	External I/O status	Not used	---	---
					08		CW limit input signal	Reflect the status of the input and output signals for the axes. 1: Signal enabled 0: Signal disabled **Note** Here, "enabled" and "disabled" are not the same as electrical ON and OFF. For details, refer to *4-3 Axis Parameter Area*.	---
					09		CCW limit input signal		
					10		Origin proximity input signal		
					11		Origin input signal		
					12		Interrupt input signal		
					13		Emergency input signal		
					14		Positioning completed input signal		
					15		Error counter reset output/ origin-adjustment command output		
NC4□3 NC2□3 NC1□3	n+10 n+6 n+4	n+13 n+9	n+16	n+19	00 to 15	Error code	Error code (See note 3.)	Indicates the error code when an error occurs.	*SECTION 11 Troubleshooting*

Note (1) In memory operation, the operation of the Position Completion Flag depends on the completion code set for memory operation. For details, refer to *SECTION 8 Memory Operation*.

(2) The bit for the X-axis is also used as "Unit in Initial Processing".

(3) During memory operation, PCU status is input for the axis that started operation or the actual moving axis/axes specified by the axis designation. For details on which axis/axes status is input, refer to *8-1-2 Axis Designation and Flags*.

4-5 Operating Data Area

The operating data area is used for setting the data for operating commands output to the PCU.

When an operating command is output to the PCU from the operating memory area, the PCU executes the command based on the settings in the operating data area.

4-5-1 Outline

CPU Unit memory (in the DM Area or EM Area) is allocated as the operating data area according to the common parameter settings. (Refer to *4-2 Common Parameter Area*.) The beginning word of the operating data area is determined in the way shown below.

DM Area Words Allocated to Special I/O Units

If 0000 (DM Area words allocated to Special I/O Units) is set for the common parameter used for the operating data area designation (word m), the beginning word, l, of the operating data area will be as follows:

- NC1□3: l = m + 32 = D20000 + 100 × unit number + 32
- NC2□3: l = m + 60 = D20000 + 100 × unit number + 60

- NC4□3: I = m + 116 = D20000 + 100 × unit number + 116

User-specified DM/EM Area Words

If 000D (user-specified DM Area words) or 0X0E, where X = 0 to 9, A, B, or C (user-specified EM Area words) is set for the common parameter used for the operating data area designation (word m), the beginning word, I, of the operating data area will be determined by the setting of word m+1, which specifies the beginning word of operating data area.

Example 1:

m	0 0 0 D	
m+1	1 F 4 0	(1F40 Hex=8000)
	I=D8000	

Example 2:

m	0 2 0 E	
m+2	3 A 9 8	(3A98 Hex=15000)
	I=E2_15000	

The operating data area is divided into an area for data that is output from the CPU Unit to the PCU and an area for data that is input from the PCU to the CPU Unit. The memory allocation of the operating data area is shown in the following tables. For more details, refer to the section on the relevant function.

Operating Data Area

Common to All Axes

I/O	Words	Name		Operation	Reference
Output (CPU Unit to PCU)	I	Operating data for data transfer	Number of write words	Specifies the number of words written from the CPU Unit to the PCU.	*SECTION 5 Transferring and Saving Data*
	I+1		Write source area	Specifies the area containing the data to be written from the CPU Unit to the PCU.	
	I+2		Write source word	Specifies the beginning word of the data to be written from the CPU Unit to the PCU.	
	I+3		Write destination address	Specifies the address in the PCU to which the data is to be written.	
	I+4		Number of read words	Specifies the number of words to be read from the PCU to the CPU Unit.	
	I+5		Read source address	Specifies the address in the PCU from which the data is to be read.	
	I+6		Read destination area	Specifies the area used to output the data read from the PCU.	
	I+7		Read destination word	Specifies the word used to output the data read from the PCU.	

For Individual Axes

I/O	Model	Words				Name		Operation	Reference
		X axis	Y axis	Z axis	U axis				
Output (CPU Unit to PCU)	NC4□3 NC2□3 NC1□3	I+8 I+8 I+8	I+20 I+20	I+32	I+44	Operating data for direct operation	Position (rightmost) Position (leftmost)	Specifies the position for direct operation and PRESENT POSITION PRESET.	*SECTION 7 Direct Operation / 6-6 Present Position Preset*
	NC4□3 NC2□3 NC1□3	I+9 I+9 I+9	I+21 I+21	I+33	I+45				
	NC4□3 NC2□3 NC1□3	I+10 I+10 I+10	I+22 I+22	I+34	I+46		Speed (rightmost) Speed (leftmost)	Specifies the target speed for direct operation, JOG, and ORIGIN RETURN.	*SECTION 7 Direct Operation / 6-7 Origin Return / 9-1 Jogging*
	NC4□3 NC2□3 NC1□3	I+11 I+11 I+11	I+23 I+23	I+35	I+47				
	NC4□3 NC2□3 NC1□3	I+12 I+12 I+12	I+24 I+24	I+36	I+48		Acceleration time (rightmost) Acceleration time (leftmost)	Specifies the acceleration/ deceleration times for direct operation, JOG, and ORIGIN RETURN.	
	NC4□3 NC2□3 NC1□3	I+13 I+13 I+13	I+25 I+25	I+37	I+49				
	NC4□3 NC2□3 NC1□3	I+14 I+14 I+14	I+26 I+26	I+38	I+50		Deceleration time (rightmost) Deceleration time (leftmost)		
	NC4□3 NC2□3 NC1□3	I+15 I+15 I+15	I+27 I+27	I+39	I+51				
	NC4□3 NC2□3 NC1□3	I+16 I+16 I+16	I+28 I+28	I+40	I+52	Operating data for memory operation	Sequence number	Specifies the sequence number to be started in memory operation.	*SECTION 8 Memory Operation*
	NC4□3 NC2□3 NC1□3	I+17 I+17 I+17	I+29 I+29	I+41	I+53	Operating data for special functions	Override	Specifies the override rate.	*9-6 Override*
	NC4□3 NC2□3 NC1□3	I+18 I+18 I+18	I+30 I+30	I+42	I+54		Teaching address	Specifies the teaching address number.	*9-2 Teaching*
	NC4□3 NC2□3 NC1□3	I+19 I+19 I+19	I+31 I+31	I+43	I+55		Not used	---	---

I/O	Model	Words				Name		Operation	Reference
		X axis	Y axis	Z axis	U axis				
Input (PCU to CPU Unit)	NC4□3 NC2□3 NC1□3	I+56 I+32 I+20	I+60 I+36	I+64	I+68	PCU status data	Present position (rightmost) Present position (leftmost)	Indicates the present position of the axes controlled by the PCU. The position is indicated for the range –2,147,483,647 to 2,147,483,647 pulses as signed 32-bit hexadecimal data using two words. Indicated range: 80000001 to 7FFFFFFF Hex (–2,147,483,647 to 2,147,483,647)	
	NC4□3 NC2□3 NC1□3	I+57 I+33 I+21	I+61 I+37	I+65	I+69				
	NC4□3 NC2□3 NC1□3	I+58 I+34 I+22	I+62 I+38	I+66	I+70		Sequence number	In memory operation, indicates the number of the sequence currently being executed.	*SECTION 8 Memory Operation*
	NC4□3 NC2□3 NC1□3	I+59 I+35 I+23	I+63 I+39	I+67	I+71		Output code (See note.)	Indicates the output code when in memory operation.	

Note During memory operation, PCU status is input for the axis that started operation or the actual moving axis/axes specified by the axis designation. For details on which axis/axes status is input, refer to *8-1-2 Axis Designation and Flags*.

4-6 Memory Operation Data

The memory operation data is used for setting the data for memory operation commands output to the PCU. The memory operation data settings must be made in the PCU's internal memory before commands are sent.

When a memory operation command (START, INDEPENDENT START) is sent to the PCU from the operating memory area, the PCU executes the command based on the memory operation data settings.

Settings for memory operation data can be saved to flash memory.

4-6-1 Outline

Memory operation data consists of the following six types of data. Settings for this data can be written from the CPU Unit to the PCU using data transfer.

1,2,3...

1. Positioning sequences
2. Speeds
3. Positions
4. Acceleration times
5. Deceleration times
6. Dwell times

For details of memory operation and the correlation between the different types of data, refer to *SECTION 8 Memory Operation*.

The address allocation of the memory operation data is shown in the following tables. The addresses shown in the table are the PCU's internal addresses. When writing data, specify the destination address as appropriate. For details on performing data transfer, refer to *SECTION 5 Transferring and Saving Data*.

Address				Name	Configuration/Explanation	Default setting
NC1□3	NC2□3	NC4□3				
X axis	Y axis	Z axis	U axis			
1000 1001 1002	2000 2001 2002	3000 3001 3002	4000 4001 4002	Sequence #0 (00 Hex) (3 words)	Example: X axis 15 12 11 08 07 04 03 00 1000 Axis designation | Output code | Position designation | Completion code 1001 Dwell time No. | Acceleration time No. | Deceleration time No. 1002 Initial speed No. | Target speed No. Axis designation: Set the bits for active axes to "1." Bit 15: U axis; 14: Z axis; 13: Y axis; 12: X axis Output code: 00 to 0F Hex Position designation: Specify whether the position data for each of the axes is the absolute position or relative position. Bit 7: U axis; 6: Z axis; 5: Y axis; 4: X axis 0: absolute position; 1: relative position Completion code: 00 to 06 Hex (0 to 6) Dwell time No. 00 to 13 Hex (0 to 19) Acceleration time No. 0 to 9 Hex (0 to 9) Deceleration time No. 00 to 09 Hex (0 to 09) Initial/Target speed No.: 00 to 63 Hex (0 to 99)	0000 0000 0000
1003 1004 1005	2003 2004 2005	3003 3004 3005	4003 4004 4005	Sequence #1 (01 Hex)	The settings are the same as for sequence #0.	
to	to	to	to	to	---	
1126 1127 1128	2126 2127 2128	3126 3127 3128	4126 4127 4128	Sequence #98 (62 Hex)	The settings are the same as for sequence #0.	
1129 112A 112B	2129 212A 212B	3129 312A 312B	4129 412A 412B	Sequence #99 (63 Hex)	The settings are the same as for sequence #0.	
112C 112D	212C 212D	312C 312D	412C 412D	Speed #0 (00 Hex) rightmost word Speed #0 (00 Hex) left- most word (2 words)	15 00 15 00 Speed #0 (leftmost word) | Speed #1 (rightmost word) Sets speed #0 (in pps units). The speed can be set in the range 1 to 1,000,000 pps as unsigned 32-bit hexadecimal data using 2 words. Setting range: 00000001 to 000F4240 Hex (1 to 1,000,000)	0000 0000
112E 112F	212E 212F	312E 312F	412E 412F	Speed #1 (01 Hex)	The settings are the same as for speed #0.	
to	to	to	to	to	---	
11F0 11F1	21F0 21F1	31F0 31F1	41F0 41F1	Speed #98 (62 Hex)	The settings are the same as for speed #0.	
11F2 11F3	21F2 21F3	31F2 31F3	41F2 41F3	Speed #99 (63 Hex)	The settings are the same as for speed #0.	
11F4 11F5	21F4 21F5	31F4 31F5	41F4 41F5	Position #0 (00 Hex) rightmost word Position #0 (00 Hex) left- most word (2 words)	15 00 15 00 Position #0 (leftmost word) | Position #1 (rightmost word) Sets position #0 (in pulse units). The position can be set in the range –1,073,741,823 to 1,073,741,823 pulses as signed 32-bit hexadecimal data using 2 words. Setting range: C0000001 to 3FFFFFFF Hex (–1,073,741,823 to 1,073,741,823)	0000 0000
11F6 11F7	21F6 21F7	31F6 31F7	41F6 41F7	Position #1 (01 Hex)	The settings are the same as for position #0.	
to	to	to	to	to	---	
12B8 12B9	22B8 22B9	32B8 32B9	42B8 42B9	Position #98 (62 Hex)	The settings are the same as for position #0.	
12BA 12BB	22BA 22BB	32BA 32BB	42BA 42BB	Position #99 (63 Hex)	The settings are the same as for position #0.	

Address				Name	Configuration/Explanation	Default setting
NC1□3	NC2□3	NC4□3				
X axis	Y axis	Z axis	U axis			
12BC 12BD	22BC 22BD	32BC 32BD	42BC 42BD	Not used	Not used. Leave set to 0000.	0000 0000
12BE 12BF	22BE 22BF	32BE 32BF	42BE 42BF	Acceleration time #1 (1 Hex) rightmost word Acceleration time #1 (1 Hex) leftmost word (2 words)	15 00 15 00 Acceleration #1 (leftmost word) | Acceleration #1 (rightmost word) Sets acceleration time #1 (in ms units). The acceleration time can be set in the range 0 to 250,000 ms as unsigned 32-bit hexadecimal data using 2 words. (See note.) Setting range: 00000000 to 0003D090 Hex (0 to 250,000)	0000 0000
12C0 12C1	22C0 22C1	32C0 32C1	42C0 42C1	Acceleration time #2 (2 Hex)	The settings are the same as for acceleration time #1.	0000 0000
to	to	to	to	to	---	
12CC 12CD	22CC 22CD	32CC 32CD	42CC 42CD	Acceleration time #8 (8 Hex)	The settings are the same as for acceleration time #1.	
12CE 12CF	22CE 22CF	32CE 32CF	42CE 42CF	Acceleration time #9 (9 Hex)	The settings are the same as for acceleration time #1.	
12D0 12D1	22D0 22D1	32D0 32D1	42D0 42D1	Not used	Not used. Leave set to 0000.	0000 0000
12D2 12D3	22D2 22D3	32D2 32D3	42D2 42D3	Deceleration time #1 (1 Hex) rightmost word Deceleration time #1 (1 Hex) leftmost word (2 words)	15 00 15 00 Deceleration #1 (leftmost word) | Deceleration #1 (rightmost word) Sets deceleration time #1 (in ms units). The deceleration time can be set in the range 0 to 250,000 ms as unsigned 32-bit hexadecimal data using 2 words. (See note.) Setting range: 00000000 to 0003D090 Hex (0 to 250,000)	0000 0000
12D4 12D5	22D4 22D5	32D4 32D5	42D4 42D5	Deceleration time #2 (2 Hex)	The settings are the same as for deceleration time #1.	
to	to	to	to	to	---	
12E0 12E1	22E0 22E1	32E0 32E1	42E0 42E1	Deceleration time #8 (8 Hex)	The settings are the same as for deceleration time #1.	
12E2 12E3	22E2 22E3	32E2 32E3	42E2 42E3	Deceleration time #9 (9 Hex)	The settings are the same as for deceleration time #1.	
12E4	22E4	32E4	42E4	Not used	Not used. Leave set to 0000.	0000
12E5	22E5	32E5	42E5	Dwell time #1 (01 Hex) (1 word)	15 00 Dwell time #1 Sets dwell time #1 (in 0.01-s units). The dwell time can be set in the range 0.00 to 9.99 s as unsigned 16-bit hexadecimal data. Setting range: 0000 to 03E7 Hex (0.00 to 9.99)	0000
12E6	22E6	32E6	42E6	Dwell time #2 (02 Hex)	The settings are the same as for dwell time #1.	
to	to	to	to	to	---	
12F6	22F6	32F6	42F6	Dwell time #18 (12 Hex)	The settings are the same as for dwell time #1.	
12F7	22F7	32F7	42F7	Dwell time #19 (13 Hex)	The settings are the same as for dwell time #1.	

Note Specify the acceleration/deceleration time as either of the following settings using the acceleration/deceleration curve and the acceleration/deceleration

time designations settings. The setting range for the acceleration/deceleration time is different for each setting.

- Set the time required to reach the maximum speed from the initial speed of each axis.
- Set the time required to reach the target speed from the initial speed of each axis

4-7 Zone Data Area

The zone data area is used to make zone settings for the present positions of the axes controlled by the PCU.

By setting zone data to the PCU's internal memory, it is possible to monitor whether the present positions for the axes are within the set zones using the Zone Monitor Flags in the operating memory area.

Zone data settings can be saved to the CPU's flash memory.

4-7-1 Zone Function

The zone function is used to notify the CPU Unit whether or not the position of the machine being controlled by the PCU is within a set region. Notification is made to the CPU Unit using the Zone Monitor Flags.

This function is mainly used when performing interlocks with peripheral devices or simultaneous control, in response to the present position of the machine.

There are 3 Zone Monitor Flags for each axis. The zones that are monitored using these flags can be set separately (i.e., zones 0, 1, and 2). To use the zone function, it is necessary to set both a CW-side value and a CCW-side value for each zone used, as shown in the following diagram. These values are the "zone data." Once the settings have been made, operation will proceed in the following way, regardless of whether an origin has been established or not.

Zone Monitor Flag ON (1): CCW-side value ≤ Present position ≤ CW-side value

Zone Monitor Flag OFF (0): Any status other than the above.

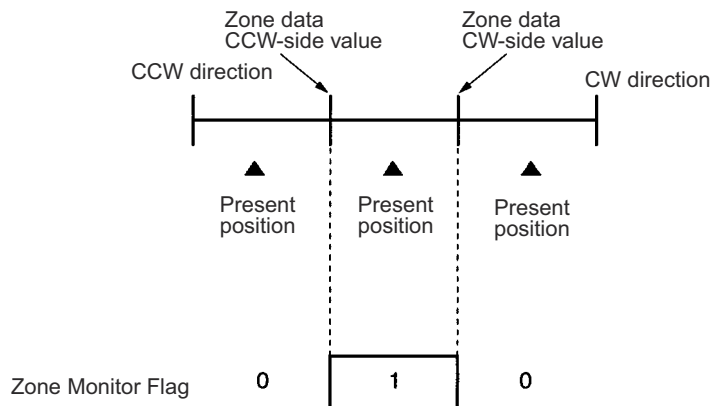

If the zone function is not required, set the zone data so that the following is satisfied:

CCW-side value ≥ CW-side value

For example, setting both the CCW-side value and the CW-side value to 0 would be sufficient to disable the zone function.

4-7-2 Zone Data Settings

Zone data is set by writing the settings to the PCU's internal memory using data transfer.

The individual zone data settings are shown in the following table. The addresses shown in the table are the PCU's internal addresses. When transferring data, specify the destination address as appropriate. For details on performing data transfer, refer to *SECTION 5 Transferring and Saving Data*.

Address				Name	Configuration/Explanation	Default setting
NC1□3	NC2□3	NC4□3				
X axis	Y axis	Z axis	U axis			
12F8 12F9	22F8 22F9	32F8 32F9	42F8 42F9	Zone #0, CCW side (rightmost word) Zone #0, CCW side (leftmost word) (2 words)	CCW side: 15 … 00 15 … 00 [Zone #0, CCW side (leftmost word)	Zone #0, CCW side (rightmost word)] CW side: 15 … 00 15 … 00 [Zone #0, CW side (leftmost word)	Zone #0, CW side (rightmost word)] Sets the CCW/CW-side values for zone #0 (in pulse units). The values can be set in the range –1,073,741,823 to 1,073,741,823 pulses as signed 32-bit hexadecimal data using 2 words. Setting range: C0000001 to 3FFFFFFF Hex (–1,073,741,823 to 1,073,741,823)	0000 0000
12FA 12FB	22FA 22FB	32FA 32FB	42FA 42FB	Zone #0, CW side (rightmost word) Zone #0, CW side (leftmost word) (2 words)		
12FC 12FD	22FC 22FD	32FC 32FD	42FC 42FD	Zone #1, CCW side (rightmost word) Zone #1, CCW side (leftmost word)	The settings are the same as for zone #0.	
12FE 12FF	12FE 22FF	32FE 32FF	42FE 42FF	Zone #1, CW side (rightmost word) Zone #1, CW side (leftmost word)		
1300 1301	2300 2301	3300 3301	4300 4301	Zone #2, CCW side (rightmost word) Zone #2, CCW side (leftmost word)	The settings are the same as for zone #0.	
1302 1303	2302 2303	3302 3303	4302 4303	Zone #2, CW side (rightmost word) Zone #2, CW side (leftmost word)		

4-8 Examples of Parameter Settings

This section shows examples of parameter settings for Position Control Units. The descriptions in the examples focus on parameters that must be changed from their default settings.

4-8-1 Setting Positioning Using Two Axes

Conditions

- The CS1W-NC233 is used.
- The unit number for the PCU is set to 0.
- The origin proximity signal, origin signal, CW/CCW limit input signal, and emergency stop input signal are wired for two axes.
- The parameters for the PCU are set in the DM Area in the CPU Unit.

- The operating data area is allocated to the area following the parameter described above.
- The two axes are controlled.
- A Servo Drive is used for each axis.
- The pulse output method for the two axes is set to CW/CCW output (i.e., default setting).
- The two axes operate within the same operating range (1,000 to 1,000,000 pulses).
- The origin proximity signal and origin signal use N.O. contacts (i.e., default setting).
- The CW/CCW limit input signals uses N.C. contacts (i.e., default setting).

Parameter Settings

- Set the default settings using the CX-Programmer.
- Make the following settings for the X axis. Make the same settings for the Y axis.
- With the following settings, jog operation and direct operation can be performed from the CPU Unit.
- When performing an origin search, make the settings and adjustments according to each system.

  m = D20000 + 100 x unit number

  = D20000 + 100 x 0 = D20000

Default Settings and Set Values: Parameters for which individual bits have specific applications are expressed in hexadecimal (e.g., 0000H).

Category	Word	Name	Default setting	Set value	Remarks
Common Parameters	m	Operating data area designation	---	0000H	The operating data area is allocated between m+60 and m+99.
	m + 1	Beginning word of operating data area	---	0000H	
	m + 2	Axis parameter designation	---	0001H	Parameters m m+4 to m+59 are used.
	m + 3	Not used.	---	0000H	

Category	Word	Name	Default setting	Set value	Remarks
Axis Parameters	m + 4	X axis I/O settings	0060H		
	m + 5	Operation mode selection	0000H	0002H	A Servo Drive is used.
	m + 6 to m + 7	Maximum speed	500000		
	m + 8 to m + 9	Initial speed	0		
	m + 10 to m + 11	Origin search high speed	25000		
	m + 12 to m + 13	Origin search proximity speed	2500		
	m + 14 to m + 15	Compensation data	0		
	m + 16	Backlash data	0		
	m + 17 to m + 18	Backlash compensation speed	0		
	m + 19	Acceleration/deceleration curve, acceleration/deceleration time designation	0		
	m + 20 to m + 21	Origin search acceleration time	100		
	m + 22 to m + 23	Origin search deceleration time	100		
	m + 24	Positioning monitor time	9999		
	m + 25 to m + 26	CCW software limit	–1073741823	–1000	The operating range is set.
	m + 27 to m + 28	CW software limit	1073741823	1000000	
	m + 29	Not used.	0		
	m + 30	Not used.	0		
	m + 31	Initial pulse designation	0		
	m + 32 to m + 59	(Y axis parameter area)	(Same as for the X axis.)	(Same as for the X axis.)	
Operation	m + 60 to m + 99	Operating data area (Refer to *4-5 Operating Data Area*.)	---		

4-8-2 Setting Positioning Using One Axis

Conditions

- The CS1W-NC233 with unit version 2.2 or later is used. (See note.)
- The unit number for the PCU is set to 0.
- The following are wired for the X axis only: origin proximity signal, origin signal, CW/CCW limit input signal, and emergency stop input signal.
- The parameters for the PCU are set in the DM Area in the CPU Unit.
- The operating data area is allocated to the area following the parameter described above.
- Only one axis is controlled.
- A Servo Drive is used.
- The pulse output method for the two axes is set to CW/CCW output (i.e., default setting).
- Operation is performed in the same operating range (-1,000 to 1,000,000 pulses).
- The origin proximity signal and origin signal use N.O. contacts (i.e., default setting).
- The CW/CCW limit input signals use N.C. contacts (i.e., default setting).

Note Operation will be performed for PCUs with unit version 2.1 or earlier. The emergency stop for the Y axis, however, requires wiring. Some parameter settings will also vary.

Parameter Settings

- Set the default settings using the CX-Programmer.
- Make the following settings for the X axis.
- With the following settings, jog operation and direct operation can be performed from the CPU Unit.
- When performing an origin search, make the settings and adjustments according to each system.

  m = D20000 + 100 x unit number

  = D20000 + 100 x 0 = D20000

Default Settings and Set Values: Parameters for which individual bits have specific applications are expressed in hexadecimal (e.g., 0000H).

Category	Word	Name	Default setting	Set value	Remarks
Common Parameters	m	Operating data area designation	---	0000H	The operating data area is allocated between to m+60 and m+99.
	m + 1	Beginning word of operating data area	---	0000H	
	m + 2	Axis parameter designation	---	1001H	Only the X axis is used. The operating data area is allocated between m+4 and m+59.
	m + 3	Not used.	---	0000H	

Category	Word	Name	Default setting	Set value	Remarks
Axis Parameters	m + 4	X axis I/O settings	0060H		
	m + 5	Operation mode selection	0000H	0002H	A Servo Drive is used.
	m + 6 to m + 7	Maximum speed	500000		
	m + 8 to m + 9	Initial speed	0		
	m + 10 to m + 11	Origin search high speed	25000		
	m + 12 to m + 13	Origin search proximity speed	2500		
	m + 14 to m + 15	Compensation data	0		
	m + 16	Backlash data	0		
	m + 17 to m + 18	Backlash compensation speed	0		
	m + 19	Acceleration/deceleration curve, acceleration/deceleration time designation	0		
	m + 20 to m + 21	Origin search acceleration time	100		
	m + 22 to m + 23	Origin search deceleration time	100		
	m + 24	Positioning monitor time	9999		
	m + 25 to m + 26	CCW software limit	–1073741823	–1000	The operating range is set.
	m + 27 to m + 28	CW software limit	1073741823	1000000	
	m + 29	Not used.	0		
	m + 30	Not used.	0		
	m + 31	Initial pulse designation	0		
	m + 32 to m + 59	(Y axis parameter area)	---	(Not set.)	
Operation	m + 60 to m + 99	Operating data area (Refer to *4-5 Operating Data Area*.)	---		

4-8-3 Setting for Continuous Operation in the Same Direction for One Axis

Conditions

- The CS1W-NC233 with unit version 2.2 or later is used. (See note.)
- The unit number for the PCU is set to 0.
- The emergency stop input signal for the X axis is wired.
- The parameters for the PCU are set in the DM Area in the CPU Unit.
- The operating data area is allocated to the area following the parameter described above.
- Only one axis is controlled.
- A Servo Drive is used.
- The pulse output method is set to CW/CCW output (i.e., default setting).
- Operation is performed without specifying the operating range. (Disable the software limit function.)
- The origin proximity signal and origin signal are not used (i.e., default setting).
- The CW/CCW limit input signals are not used.

Note Operation will be performed for PCUs with version 2.1 or earlier. The emergency stop for the Y axis, however, requires wiring. Some parameter settings will also vary.

Parameter Settings

- Set the default settings using the CX-Programmer.
- Make the following settings for the X axis.
- With the following settings, jog operation and direct operation can be performed from the CPU Unit.
- The present position is set to 0 every time the axis is started.
  Take into consideration that the software limits will not operate and the present position will be lost.

  m = D20000 + 100 x unit number

  = D20000 + 100 x 0 = D20000

Default Settings and Set Values: Parameters for which individual bits have specific applications are expressed in hexadecimal (e.g., 0000H).

Category	Word	Name	Default setting	Set value	Remarks
Common Parameters	m	Operating data area designation	---	0000H	The operating data area is allocated between m+60 and m+99.
	m + 1	Beginning word of operating data area	---	0000H	
	m + 2	Axis parameter designation	---	1001H	Only the X axis is used. Parameters m+4 to m+59 are used.
	m + 3	Not used.	---	0000H	

Category	Word	Name	Default setting	Set value	Remarks
Axis Parameters	m + 4	X axis I/O settings	0060H	0070H	The CW/CCW limit input signals are not used.
	m + 5	Operation mode selection	0000H	0002H	A Servo Drive is used.
	m + 6 to m + 7	Maximum speed	500000		
	m + 8 to m + 9	Initial speed	0		
	m + 10 to m + 11	Origin search high speed	25000		
	m + 12 to m + 13	Origin search proximity speed	2500		
	m + 14 to m + 15	Compensation data	0		
	m + 16	Backlash data	0		
	m + 17 to m + 18	Backlash compensation speed	0		
	m + 19	Acceleration/deceleration curve, acceleration/deceleration time designation	0		
	m + 20 to m + 21	Origin search acceleration time	100		
	m + 22 to m + 23	Origin search deceleration time	100		
	m + 24	Positioning monitor time	9999		
	m + 25 to m + 26	CCW software limit	–1073741823	–1000	The operating range is not set. (The software limits are disabled.)
	m + 27 to m + 28	CW software limit	1073741823	1000000	
	m + 29	Not used.	0		
	m + 30	Not used.	0		
	m + 31	Initial pulse designation	0		
	m + 32 to m + 59	(Y axis parameter area)	---	(Not set.)	
Operation	m + 60 to m + 99	Operating data area (Refer to *4-5 Operating Data Area*.)	---		

SECTION 5
Transferring and Saving Data

This section explains how to transfer and save parameters and data using the data transfer bits, the IOWR and IORD instructions, and CX-Position.

5-1 Transferring and Saving Data 114
5-1-1 Transferring Data 114
5-1-2 Saving Data. 115
5-1-3 Data that Can be Saved and/or Transferred 116
5-1-4 Data Addresses 116
5-1-5 Data Checking 117
5-1-6 Data Transfer Priority 119
5-2 Writing Data with the WRITE DATA Bit 121
5-2-1 Outline 122
5-2-2 Data Writing Procedure 122
5-2-3 Data Settings Required for Writing Data 123
5-2-4 Timing Chart for Writing Data 124
5-2-5 Example of a Write Data Program 125
5-3 Reading Data with the READ DATA Bit 126
5-3-1 Outline 126
5-3-2 Data Settings Required for Reading Data. 127
5-3-3 Timing Chart for Reading Data 128
5-3-4 Data Reading Program Example 129
5-4 Writing Data with IOWR 131
5-4-1 Outline 131
5-4-2 IOWR: INTELLIGENT I/O WRITE 132
5-4-3 Error Code Treatment for IOWR 133
5-4-4 Flags 133
5-4-5 Precautions when Using IOWR 134
5-4-6 IOWR Program Example 137
5-5 Reading Data with IORD 138
5-5-1 Outline 138
5-5-2 READ DATA Procedure 138
5-5-3 IORD: INTELLIGENT I/O READ 138
5-5-4 Error Code Treatment for IORD. 139
5-5-5 Flags 140
5-5-6 Precautions when Using IORD. 140
5-5-7 IORD Program Example. 141
5-6 Saving Data 142
5-6-1 Flash Memory. 142
5-6-2 Data Saving Procedure 143
5-6-3 Timing Chart for Saving Data. 144
5-7 Transferring Data with CX-Position 144

5-1 Transferring and Saving Data

5-1-1 Transferring Data

Parameters and data can be transferred between the CPU Unit and the PCU using one of the 3 methods explained below. The different types of data can be classified into the following groups (it is possible to send only parts of these groups):

Positioning sequences, speeds, positions, acceleration times, deceleration times, dwell times, and zones

1,2,3... 1. Writing and reading data to and from the PCU using a data transfer bit. (Refer to *5-2 Writing Data with the WRITE DATA Bit* and *5-3 Reading Data with the READ DATA Bit*.)

Large amounts of data can be changed and data can be read by turning ON a data transfer bit using, for example, OUT in the ladder program.

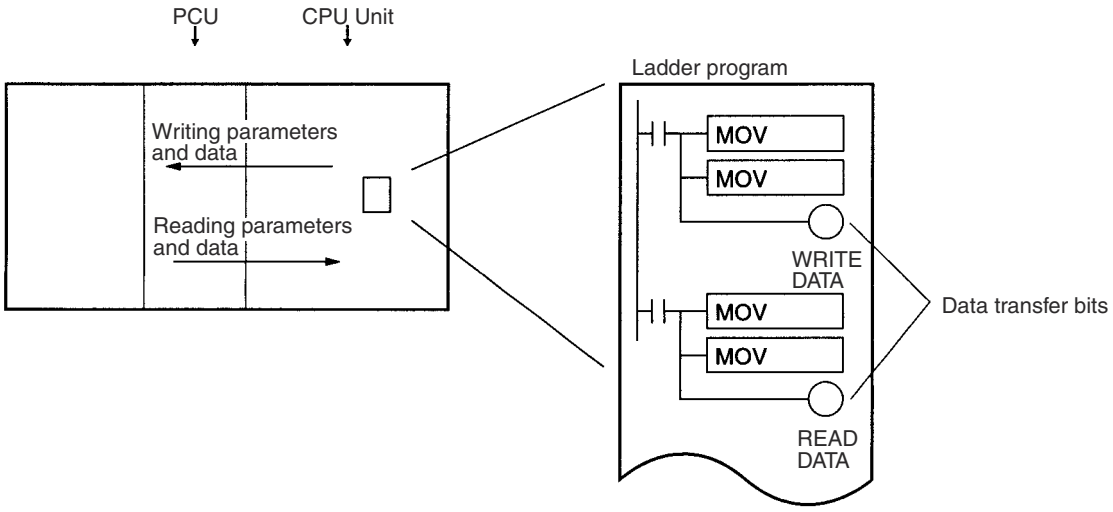

2. Writing and reading data to and from the PCU using the IOWR and IORD instructions. (Refer to *5-4 Writing Data with IOWR* and *5-5 Reading Data with IORD*.)

During CPU Unit operation, small amounts of data can be changed at high speed and data can be read using the IOWR and IORD instructions from the ladder program.

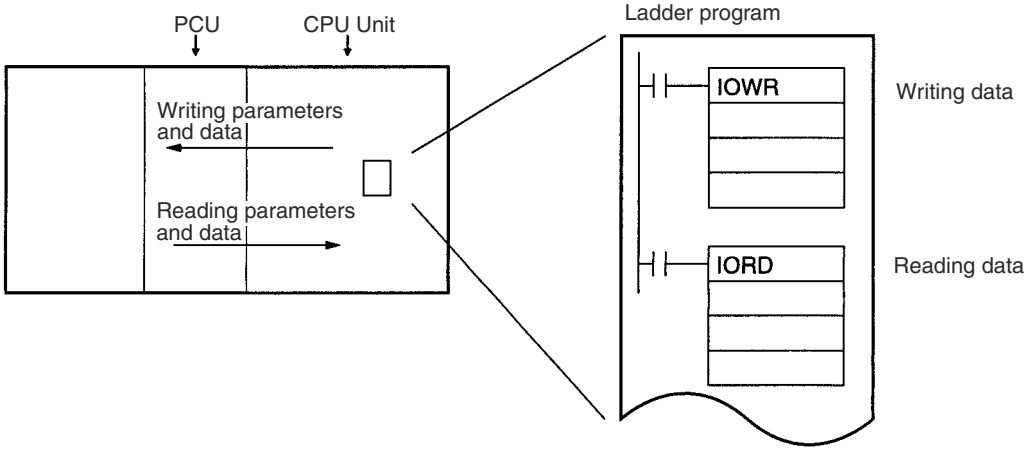

3. Downloading and uploading using CX-Position. (Refer to *5-7 Transferring Data with CX-Position*.)

Parameters and data created with CX-Position, as well as the PCU's internal data, can be uploaded/downloaded between the PCU and CX-Position.

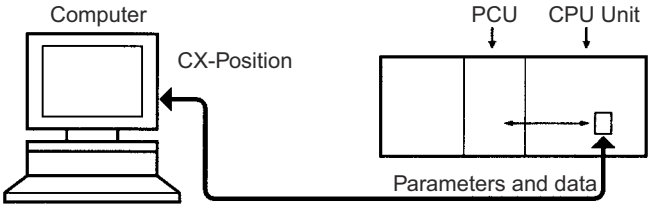

Note Be sure to use only parameters and data for which correct operation is possible.

5-1-2 Saving Data

The transferred data is written to the PCU's memory, but it will be lost if the power is turned OFF or if the PCU is restarted from the CPU Unit. To keep the transferred data permanently in the PCU, it is necessary to save it to the PCU's flash memory using the operating memory area. For details on saving data to flash memory, refer to *5-6 Saving Data*. Once saved, the data is kept in the flash memory of the PCU, and is used the next time the power is turned ON or the PCU is restarted. If the data is merely transferred without being saved, when the power is turned OFF or the PCU is restarted, the contents of the memory will revert to whatever was saved previously.

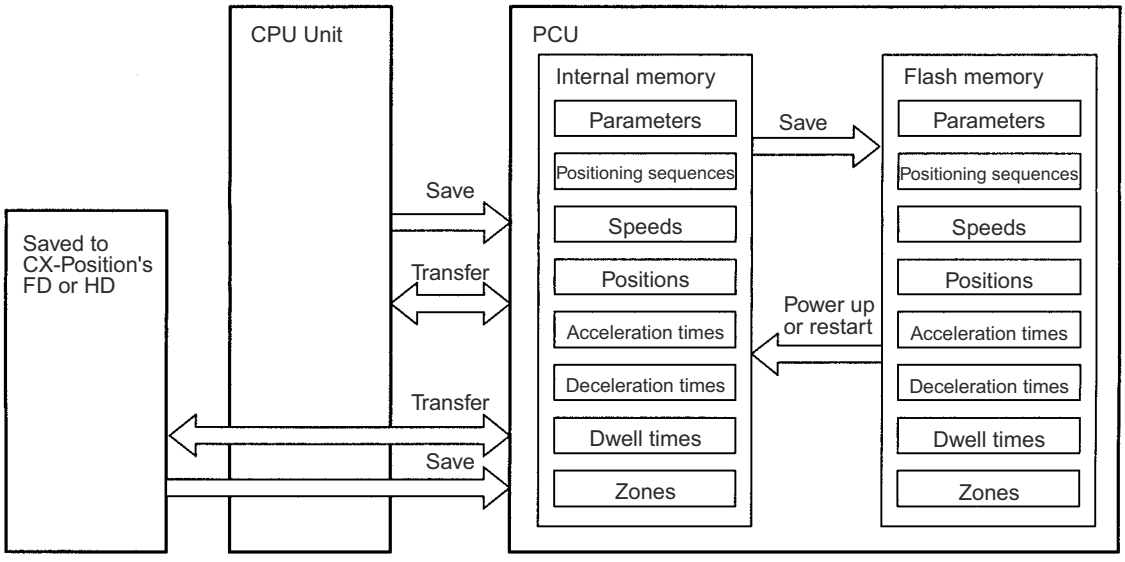

Note

1. Data saved to flash memory is automatically read to the internal memory at power up or restart. The axis parameters that are read to the internal memory can be set to either the axis parameters saved in flash memory or to the axis parameter settings in the CPU Unit's DM Area.
2. Do not turn OFF the power or restart the PCU while the data is being saved. It can cause a fault in the PCU's internal flash memory. Saving data may take up to 30 seconds.
3. Data cannot be saved while a data transfer is in progress or while the PCU is busy. Any attempt to execute a save will result in a multiple start error (error code 8000).

4. There is a limit on the number of times you can read something using the flash memory. Set this so that up to 100,000 data saving operations can be performed.

5-1-3 Data that Can be Saved and/or Transferred

All the following data used by the PCU can be read, written, and saved to the flash memory. The timing with which transferred data is enabled varies according to the type of data. For details on the enable timing of the axis parameters, refer to *4-3 Axis Parameter Area*. Data other axis parameters (e.g., positioning sequences and positions) will be enabled immediately after it is transferred.

Note The following types of data can be saved together in the flash memory.

- Axis parameters (see note)
- Positioning sequences
- Speeds
- Positions
- Acceleration times
- Deceleration times
- Dwell times
- Zones

Note When the power is turned ON or when the PCU is restarted, a choice is available by using the axis parameter designation setting in the DM Area common parameters (refer to *4-2 Common Parameter Area*) between sending the axis parameters automatically from the DM Area to the PCU or using the axis parameters saved in the PCU.

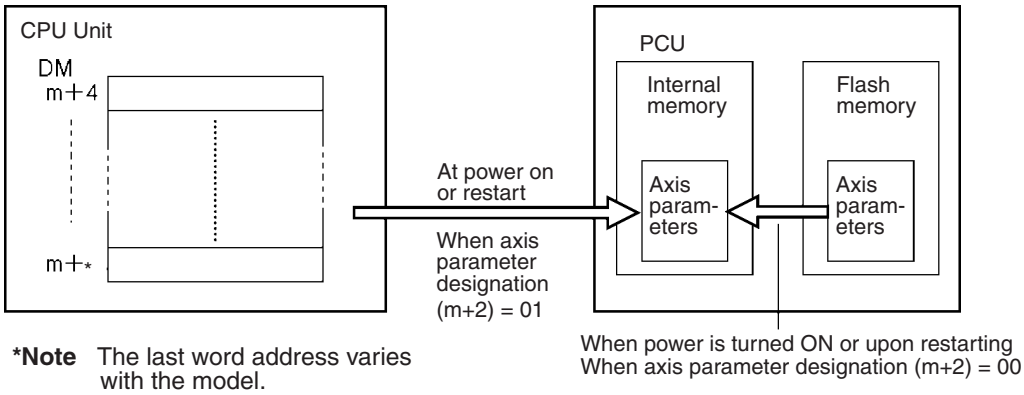

***Note** The last word address varies with the model.

5-1-4 Data Addresses

Each data item has its own address in the PCU, and this address is used to identify the write destination and read source when data is transferred. One word (16 bits) is used to designate each address. It is not possible to transfer data extending across axis parameters and data for the X, Y, Z and U axes.

Note When transferring an item of data, transfer the data for all the words allocated to that item. For details of the word configurations for data, refer to *Section 4-2 Common Parameter Area*.

Address	NC1□3		NC2□3		NC4□3	
0004 to 0073	Axis parameters (one axis)		Axis parameters (two axes)		Axis parameters (four axes)	
1000 to 112B	For X Axis	Positioning sequences	For X Axis	Positioning sequences	For X Axis	Positioning sequences
112C to 11F3		Speeds		Speeds		Speeds
11F4 to 12BB		Positions		Positions		Positions
12BC to 12CF		Acceleration times		Acceleration times		Acceleration times
12D0 to 12E3		Deceleration times		Deceleration times		Deceleration times
12E4 to 12F7		Dwell times		Dwell times		Dwell times
12F8 to 1303		Zones		Zones		Zones
2000 to 212B			For Y Axis	Positioning sequences	For Y Axis	Positioning sequences
212C to 21F3				Speeds		Speeds
21F4 to 22BB				Positions		Positions
22BC to 22CF				Acceleration times		Acceleration times
22D0 to 22E3				Deceleration times		Deceleration times
22E4 to 22F7				Dwell times		Dwell times
22F8 to 2303				Zones		Zones
3000 to 312B					For Z Axis	Positioning sequences
312C to 31F3						Speeds
31F4 to 32BB						Positions
32BC to 32CF						Acceleration times
32D0 to 32E3						Deceleration times
32E4 to 32F7						Dwell times
32F8 to 3303						Zones
4000 to 412B					For U Axis	Positioning sequences
412C to 41F3						Speeds
41F4 to 42BB						Positions
42BC to 42CF						Acceleration times
42D0 to 42E3						Deceleration times
42E4 to 42F7						Dwell times
42F8 to 4303						Zones

5-1-5 Data Checking

1,2,3...

1. When data is transferred (written) to the PCU, it is first copied to the PCU's internal receive buffer.
2. A check is then performed on all of the values in the receive buffer.
3. If a checked value is within the acceptable range, it is written to the appropriate parameter or data area.

   If a value is found to be outside the acceptable range, the appropriate error code (in the range 1000 to 4019) is output to the operating memory area and, at the same time, all of the data in the buffer is annulled. (In this case, the transferred parameter or data is not written to its respective parameter or data area.)

Example:

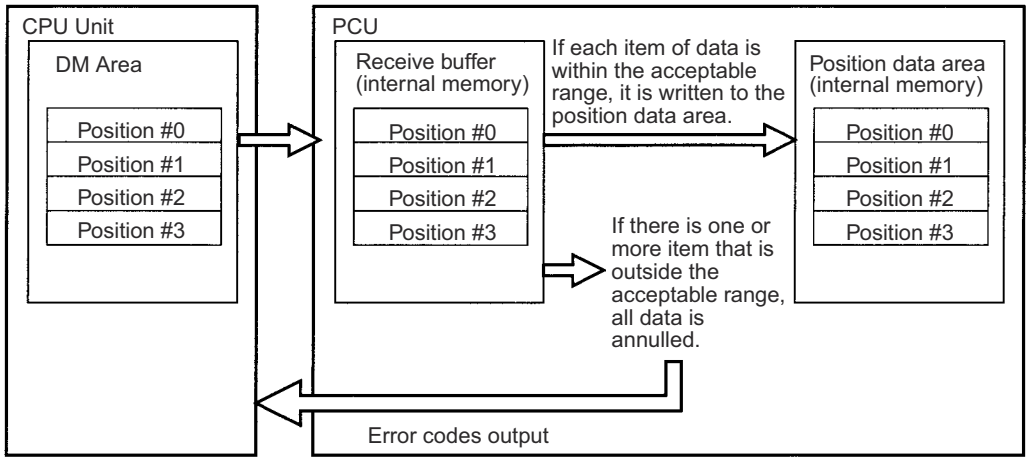

- If an error is detected by the data check, the correct data should be sent again.
- If data transfer is completed successfully, the error is cleared.
- If the data is stored or the instruction to activate is executed without the correct data being re-sent, the error will be cleared but the data after the error will not be transmitted. In this situation, an abnormal operation may result.

⚠ **Caution** The Intelligent I/O Write (IOWR) and Intelligent I/O Read (IORD) instructions transfer all data indiscriminately at execution. For this reason, if the IOWR or IORD instructions are executed consecutively within the same cycle, an error occurring at data transfer execution may not be output to the operating memory area, in the way shown below.

Example:

Transfer Error Output to CPU Unit

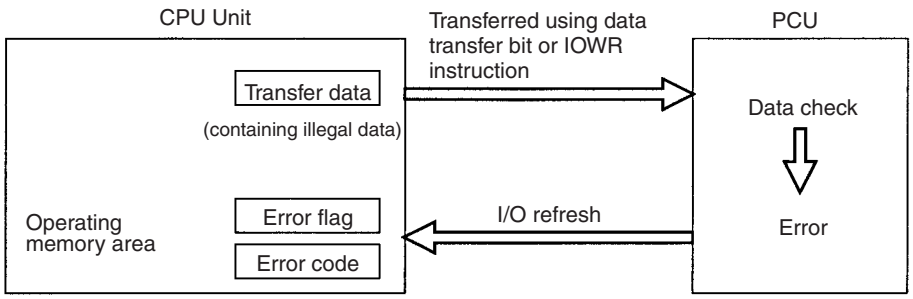

Transfer Error Not Output to CPU Unit

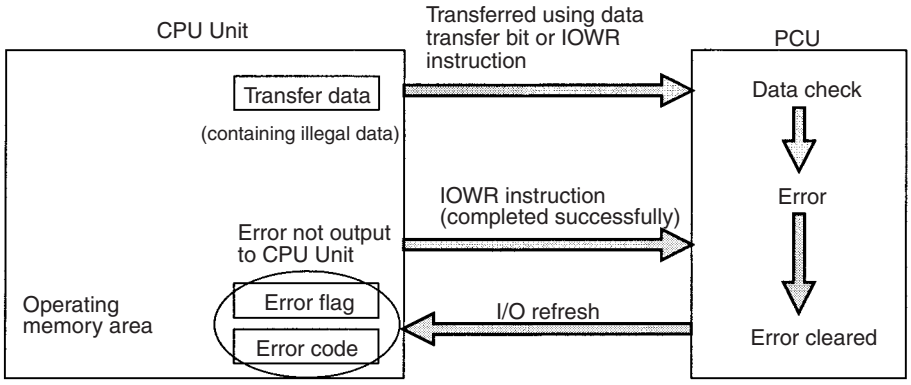

5-1-6 Data Transfer Priority

As mentioned in *5-1-1 Transferring Data*, parameters and data can be transferred to the PCU using the 3 methods shown below. If these 3 methods are used in combination, a situation where data transfer is impossible may occur. The following table indicates the operation of the PCU when data is transferred using different combinations of the 3 methods.

Executed / Status		IORD/IOWR instruction		Data transfer bit			CX-Position		
		IORD	IOWR	READ DATA	WRITE DATA	SAVE DATA	Upload	Download	Save
IORD/IOWR instruction	**During IORD execution**	---	---	---	---	---	---	---	---
	During IOWR execution	OK	Busy	OK	OK	OK	OK	Busy	Busy
Data transfer bit	**During read**	OK	OK	Error	Error	Error	OK	Busy	Busy
	During write	OK	Busy	Error	Error	Error	OK	Busy	Busy
	During save	Busy	Busy	Error	Error	Error	OK	Busy	Busy
CX-Position	**During upload**	OK	OK	OK	OK	OK	OK	OK	OK
	During download	OK	Busy	Error	Error	Error	OK	Busy (see note)	Busy (see note)
	During save	Busy	Busy	Error	Error	Error	OK	Busy (see note)	Busy (see note)

Note For when more than one CX-Position is used for one PCU.

Explanation

The above table shows the operation that results when a data transfer function is executed (the “executed” row in the table) on the data for one axis from the CPU Unit or CX-Position while a data transfer function is being executed (the “status” column in the table) on the data for another axis from the CPU Unit or CX-Position. (If data transfer functions are executed from the CPU Unit at the same time, depending on the processing in the PCU, it may be necessary to transpose rows and columns in the above table to identify the kind of operation that will be performed.)

“---” in the table indicates a combination of functions that does not exist. (The IORD instruction reads all data in one operation. The status “during IORD instruction” does not exist.)

“OK” in the above table indicates that the functions will be executed. The second function will be executed after execution of the first function has been completed. However, if reading and writing (in whichever order) are performed for the same data, depending on the timing of the PCU’s internal processing, the values that are read may either be the values before writing or after writing. (See the diagram below.)

In order to avoid this element of uncertainty, do not execute a read function during the execution of a write function.

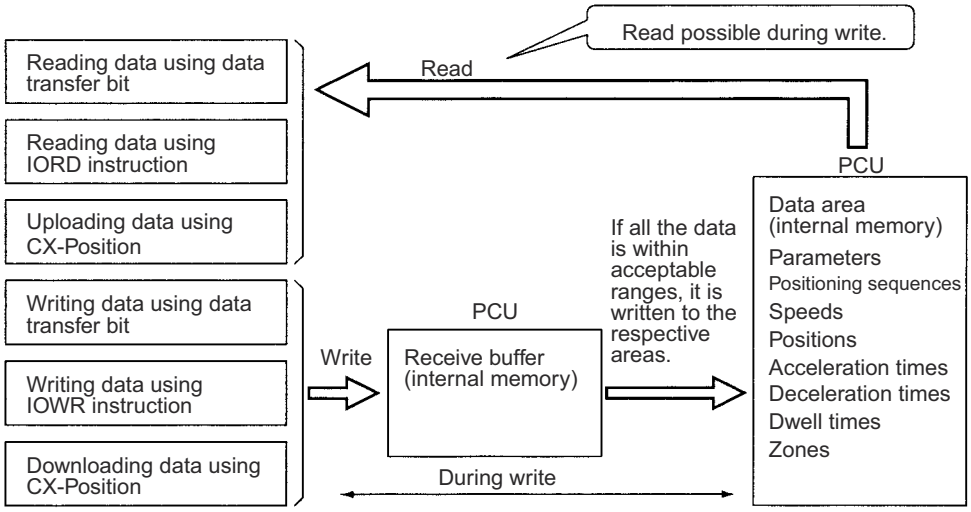

"Busy" in the table indicates that the function cannot be executed. If the method used was the IOWR/IORD instruction, it will be necessary to execute it again. For details, refer to *5-4 Writing Data with IOWR* and *5-5 Reading Data with IORD*.

"Error" in the table indicates that the function cannot be executed and a multiple start error (error code 8000) is generated.

5-2 Writing Data with the WRITE DATA Bit

This section explains the procedures for writing to the PCU data allocated to the operating memory area using WRITE DATA (word n+1 bit 12). A program example is also provided.

Note

1. Take care not to turn OFF the power supply or restart the PCU while a data transfer is in progress. The PCU will not operate normally unless all data is transferred. If there is an interruption, the data should be re-sent.
2. It is possible to write data while pulses are being output, but not while data is being read or stored. If attempted, it will result in a multiple start error (error code 8000).
3. When transferring data using WRITE DATA, the data must be transferred in data units. Data transfer should not start or end part-way through the data. For example, with X-axis sequence #0, the data unit becomes three words consisting of addresses from 1000 to 1002. If transfer is started or ended part-way through, a write transfer words error (error code 8310) or write destination address error (error code 8312) will be generated.
4. When writing the origin search high speed or origin search proximity speed parameters, write the parameters for both of these settings at the same time. If only one of them is written, a write transfer words error (error code 8310) will be generated.

5-2-1 Outline

The following example of positioning sequences summarizes how to write data to the PCU.

When the WRITE DATA Bit (word n+1, bit 12) in the operating memory area is turned ON, data in the PLC's DM or EM Area is written to consecutive addresses in the PCU according to the number of write words, the write source area, the write source word, and the write destination address designated in the operating data area.

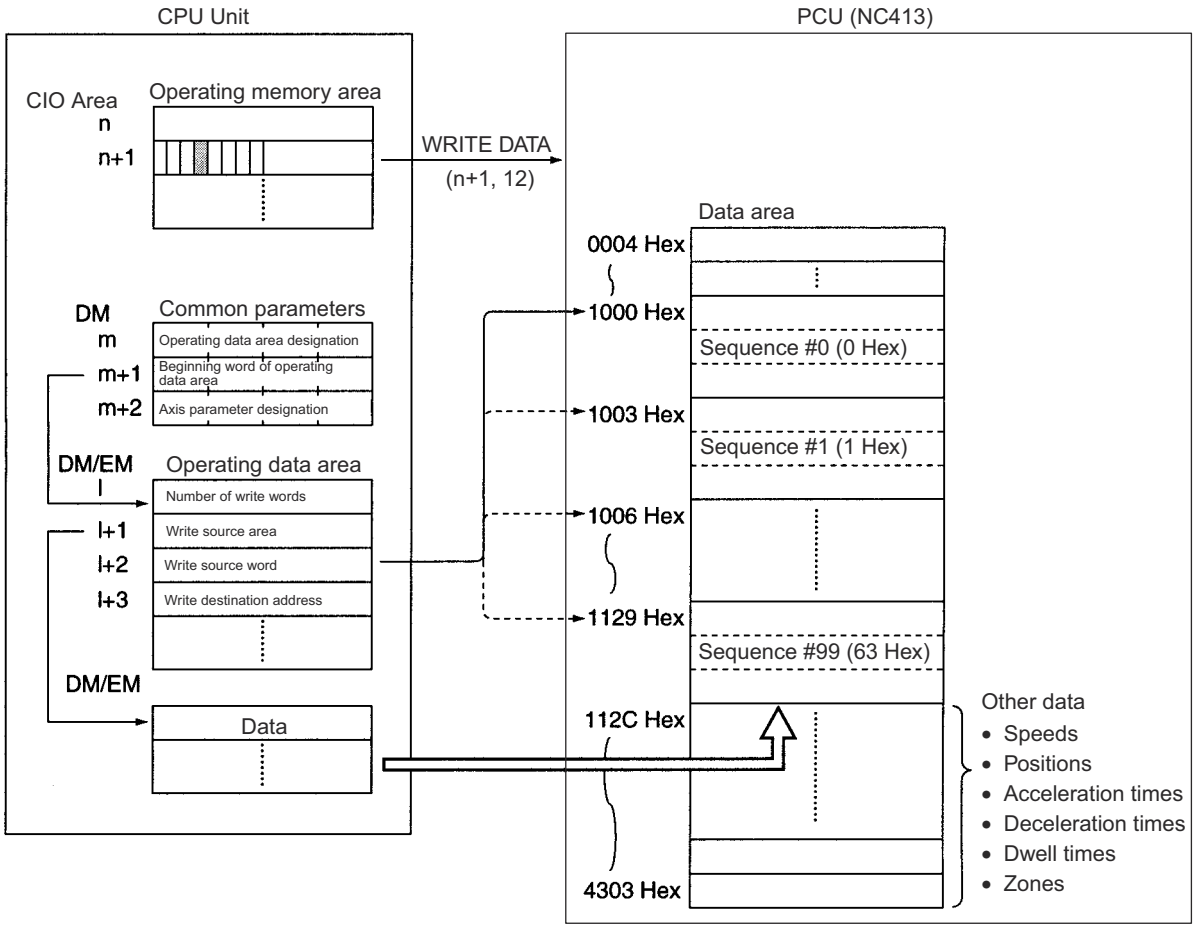

The "n" in the CIO Area is the beginning word of the operation memory area and is determined when the unit number is specified.

The "m" in the DM Area is the beginning word of the common parameter area and is determined when the unit number is specified.

The "I" in the EM or DM Area is the beginning word of the operating data area specified by the common parameters and is also the beginning word of the operating data that determines data transfer.

With data writing, 772 words of data in consecutive addresses can be sent at once.

5-2-2 Data Writing Procedure

1,2,3...

1. Set the common parameters. (Refer to *4-2 Common Parameter Area*.)
   - m: Set the operating data area either to DM or to EM.
   - m+1: Set the beginning word of the operating data area (I).
   - m+2: Designate the axis parameters.

2. Power up again or restart.
   The data for the common parameters set in 1 above is enabled.
3. Set the operating data area.
   - I: Total number of words (Hex) for the data to be written to the PCU.
   - I+1: The area in the CPU Unit (DM/EM) where the data is set.
   - I+2: Beginning word address (Hex) of the area in the CPU Unit's DM or EM area where the data is set.
   - I+3: Beginning address (Hex) of PCU data area where data is to be stored.
4. Set data.
   Set data to be written to the PCU in the area (in the DM or EM Area) specified by words I to I+2.
5. Execute WRITE DATA.
   Turn the WRITE DATA Bit (word n+1, bit 12) from OFF to ON.

The operations in (1) and (2) above are required when using the PCU for the first time or when modifying the common parameter settings.

5-2-3 Data Settings Required for Writing Data

Beginning Words of Operating Memory Area, Operating Data Area, and Parameter Areas

The beginning words of the operating memory area, the operating data area and common parameter area used for a PCU are determined (or set) according to the following.

- Beginning word of the operating memory area, n = CIO 2000 + 10 × unit number
- Beginning word of the common parameter area, m = D20000 + 100 × unit number
- Beginning word of the operating data area, l, is specified in m and m+1.

Word	Name	Bit	Reference
m	Operating data area designation	00 to 15	*SECTION 4*
m+1	Beginning word of operating data area	00 to 15	
m+2	Axis parameter designation	00 to 15	

Operating Memory Area

Name	Model	Operating memory area	Bit	Contents
WRITE DATA	NC4□3 NC2□3 NC1□3	n+1 n+1 n+1	12	Starts writing data at the rising edge.
Data Transferring Flag	NC4□3 NC2□3 NC1□3	n+8 n+4 n+2	14	1: Data is being transferred 0: Power up or restart; transfer completed; transfer unsuccessful

Operating Data Area

Name	Model	Operating data area	Bit	Contents
Number of write words	Same for all models	I	00 to 15	15 … 00 Specifies the number of words to be written to the PCU. Setting range: 0001 to 0304 Hex (1 to 772 words)
Write source area		I+1	00 to 15	15 … 08 | 07 … 00 EM bank designation | DM/EM designation Specifies the area where the parameters and data written to the PCU are set. DM/EM designation: 0D: Designates DM Area 0E: Designates EM Area EM bank designation: Specifies the EM Area bank number if the EM Area is designated in bits 00 to 07. Setting range: 00 to 0C (banks 0 to C)
Write source word		I+2	00 to 15	15 … 00 Specifies the beginning word of the area in the DM or EM Area used for setting parame ters and data. Setting range: 0000 to 7FFF Hex (Word 0 to 32767)
Write destination address		I+3	00 to 15	15 … 00 Specifies the beginning address of the area in the PCU to which parameters and data are written. For details of the PCU's internal addresses, refer to *SECTION 4 Data Areas*.

5-2-4 Timing Chart for Writing Data

Writing data is possible even during axis operation.
It is not possible to write data and read data at the same time.
The following diagram is a timing chart for writing data to a 4-axis PCU.

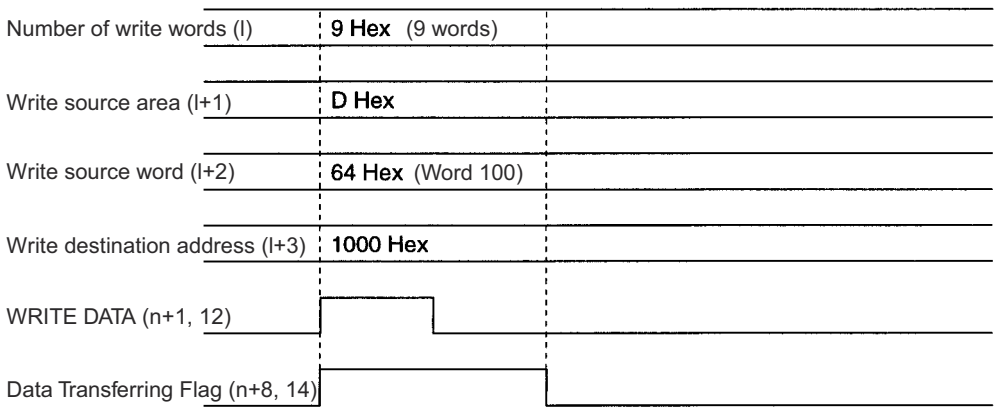

When the data writing operation is completed, the Data Transferring Flag (word n+8, bit 14) is turned from ON to OFF. If an error occurs during data transfer, the Error Flag (word n+8, bit 12) is turned ON and the error code is output to n+10 in the operating memory area. Check this error code to determine the cause of the error and correct it.

5-2-5 Example of a Write Data Program

A sample program is given below for writing the following speed data to the PCU. The PCU to be used will be an NC413 designated unit number 0.

Allocation of Areas

The common parameter area is from D20000 to D20002.
The operating memory area is from CIO 2000 to CIO 2019.
The beginning word of the operating data area is D00400.

Speeds to be Transferred

The beginning word address for the data transfer area is D00500, and the data to be sent is as follows:

Data	Address (transfer destination)	DM (transfer source)	Setting
Speed #0	112C 112D	00500 00501	03E8 0000 (1,000 pps)
Speed #1	112E 112F	00502 00503	157C 0000 (5,500 pps)

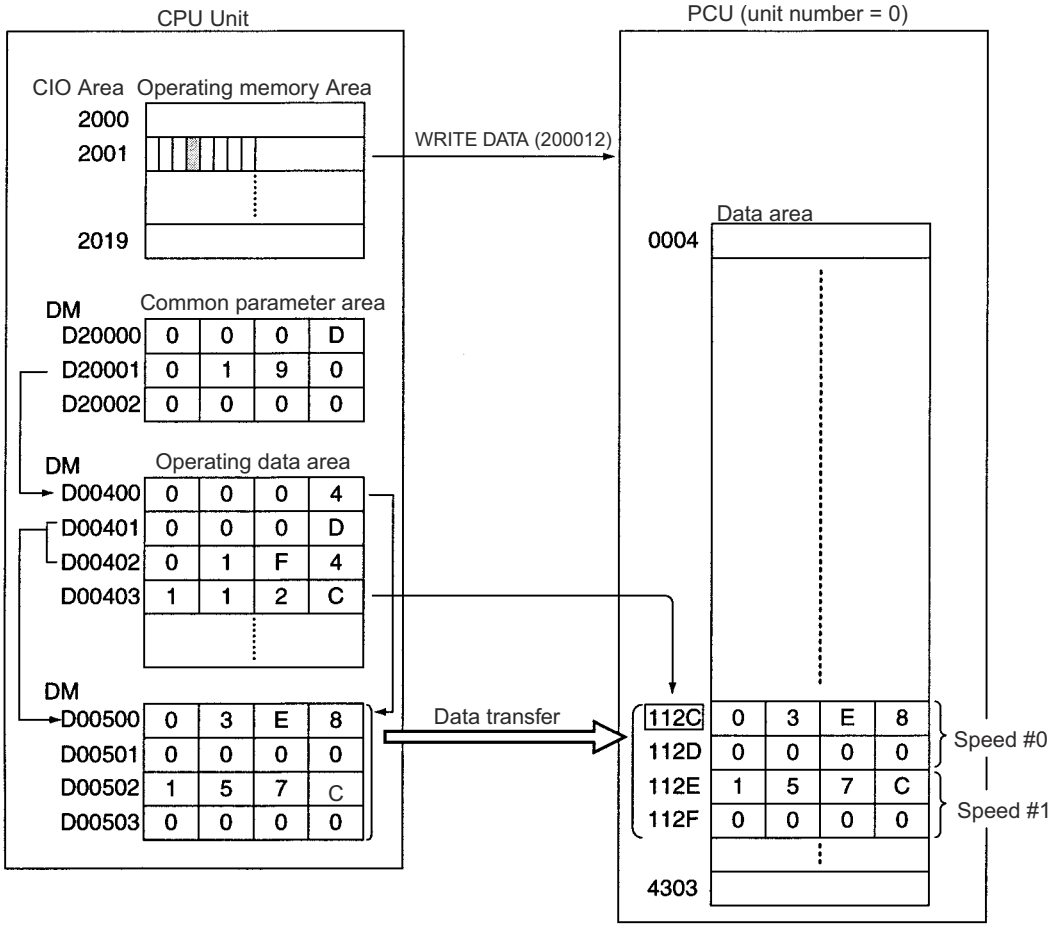

Program Example The work bit R1 is used to begin writing.

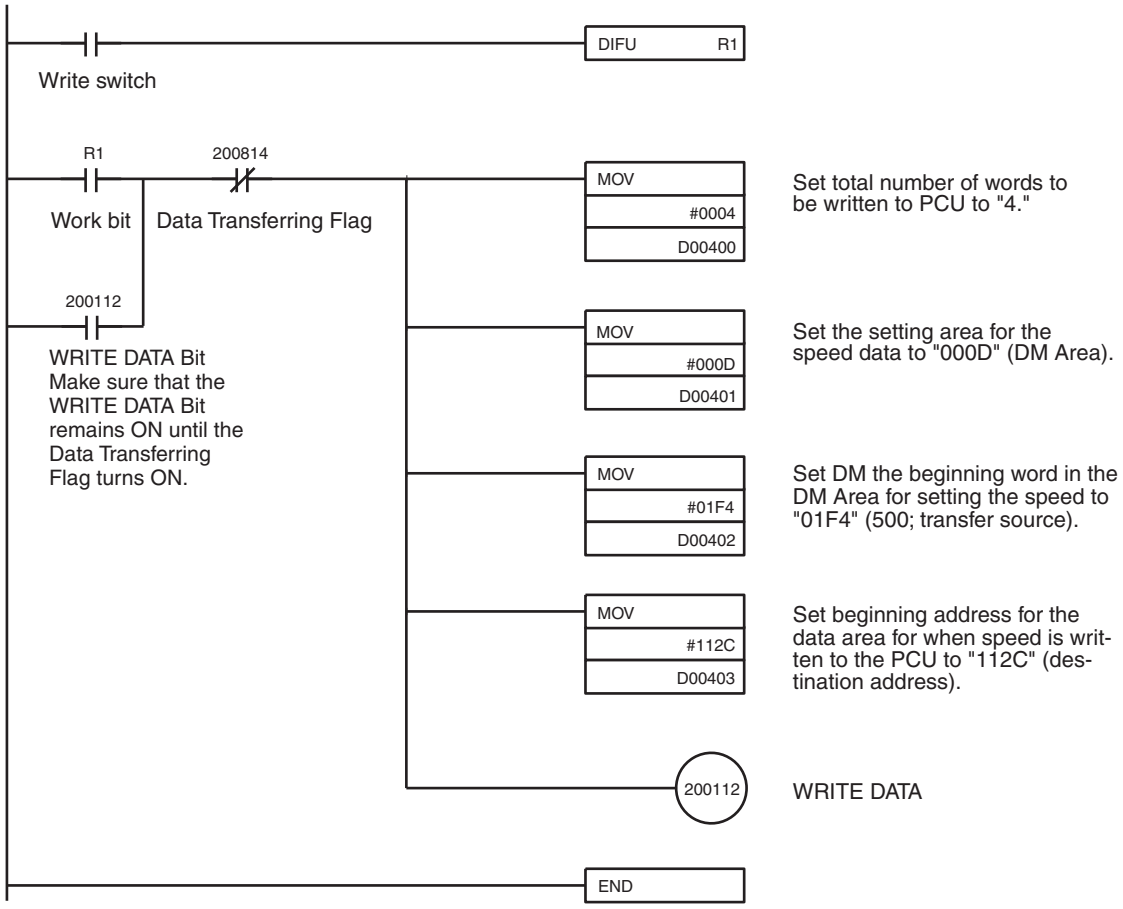

5-3 Reading Data with the READ DATA Bit

This section explains the procedures for reading data allocated to the operating memory area from the PCU using the READ DATA Bit (word n+1, bit 13). A program example is also provided.

Note

1. Data can be read while pulses are being output, but not while data is being written or saved. If attempted, it will result in a multiple start error (error code 8000).
2. When transferring data using READ DATA, the data must be transferred in data units. Data transfer should not start or end part-way through the data. For example, with X axis sequence #0, the data unit becomes three words, in addresses 1000 to 1002. If the transfer is started or ended part-way through, a read transfer words error (error code 8320) or read transfer source address error (error code 8321) will be generated.

5-3-1 Outline

When the READ DATA Bit (word n+1, bit13) in the operating memory area is turned ON, consecutive addresses data is read from the CPU to the DM or EM Area according to the number of read words, the read source address, the read destination area, and the read destination word designated in the operating data area.

For an outline, refer to *5-2 Writing Data with the WRITE DATA Bit*. With data reading, 772 words of data in consecutive addresses can be read at one time.

READ DATA Procedure

1,2,3...

1. Set common parameters. (Refer to *4-2 Common Parameter Area.)*
   m: Set the operating data area either to DM or to EM.
   m+1: Set the beginning word of the operating data area (l).
   m+2: Set the axis parameter designation.
2. Powering up again or restart.
   The data for the common parameters set in 1 above will be enabled.
3. Set the operating data area.
   l+4: Total number of words to be read from the PCU (Hex)
   l+5: Beginning address of PCU's data area (Hex).
   l+6: The area in the CPU Unit (DM/EM) where the data will be stored.
   l+7: Beginning word address (Hex) of CPU Unit's DM or EM area where read data will be stored.
4. Execute READ DATA.
   Turn the READ DATA Bit (word n+1, bit 13) from OFF to ON.

The operations in (1) and (2) above are required when using the PCU for the first time or when modifying the data in the common parameter area.

5-3-2 Data Settings Required for Reading Data

Beginning Words of Operating Memory Area, Operating Data Area, and Parameter Areas

The beginning words of the operating memory area, the operating data area and common parameter area used for a PCU are determined (or set) according to the following.

- Beginning word of the operating memory area, n = CIO 2000 + 10 × unit number
- Beginning word of the common parameter area, m = D20000 + 100 × unit number
- Beginning word of the operating data area, l, is specified in m and m+1.

Word	Name	Bit	Reference
m	Operating data area designation	00 to 15	*SECTION 4*
m+1	Beginning word of operating data area	00 to 15	
m+2	Axis parameter designation	00 to 15	

Operating Memory Area

Name	Model	Operating memory area	Bit	Contents
WRITE DATA	NC4□3 NC2□3 NC1□3	n+1 n+1 n+1	13	Starts reading data at the rising edge.
Data Transferring Flag	NC4□3 NC2□3 NC1□3	n+8 n+4 n+2	14	1: Data is being transferred 0: Power up or restart; transfer completed; transfer unsuccessful

Operating Data Area

Name	Model	Operating data area	Bit	Contents
Number of read words	Same for all models	I+4	00 to 15	15 … 00 Specifies the number of words to be read to the CPU Unit. Setting range: 0001 to 0304 Hex (1 to 772 words)
Read source address		I+5	00 to 15	15 … 00 Specifies the beginning address of the area in the PCU from which parameters and data are read. For details of the PCU's internal addresses, refer to *SECTION 4 Data Areas*.
Read destination area		I+6	00 to 15	15 … 08 | 07 … 00 EM bank designation | DM/EM designation Specifies the area where the parameters and data read from the PCU are stored. DM/EM designation: 0D: Designates DM Area 0E: Designates EM Area EM bank designation: Specifies the EM Area bank number if the EM Area is designated in bits 00 to 07. Setting range: 00 to 0C (banks 0 to C)
Read destination word		I+7	00 to 15	15 … 00 Specifies the beginning word of the area in the CPU Unit's DM or EM Area in which parameters and data are stored. Setting range: 0000 to 7FFF Hex (Words 0 to 32767)

5-3-3 Timing Chart for Reading Data

Reading data is possible even during axis operation.
It is not possible to write and read data at the same time.
The following diagram is a timing chart for reading data from a 4-axis PCU.

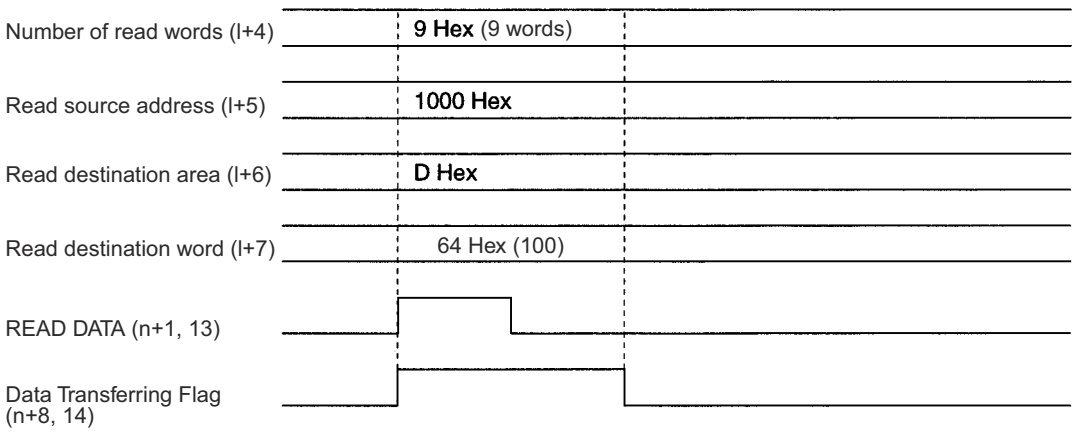

After the data reading operation has been completed, the Data Transferring Flag (word n+8, bit 14) is turned from ON to OFF. If an error occurs during data transfer, the Error Flag (word n+8, bit 12) will be turned ON and the error code will be output to n+10 in the operating memory area. Check this error code to determine the cause of the error and correct it.

5-3-4 Data Reading Program Example

In this example, speeds #0 and #1 written in *5-2 Writing Data with the WRITE DATA Bit* are read. The conditions to be set are the same as those for the data writing example. The beginning word of the DM Area, where the read data is to be stored, is D00500.

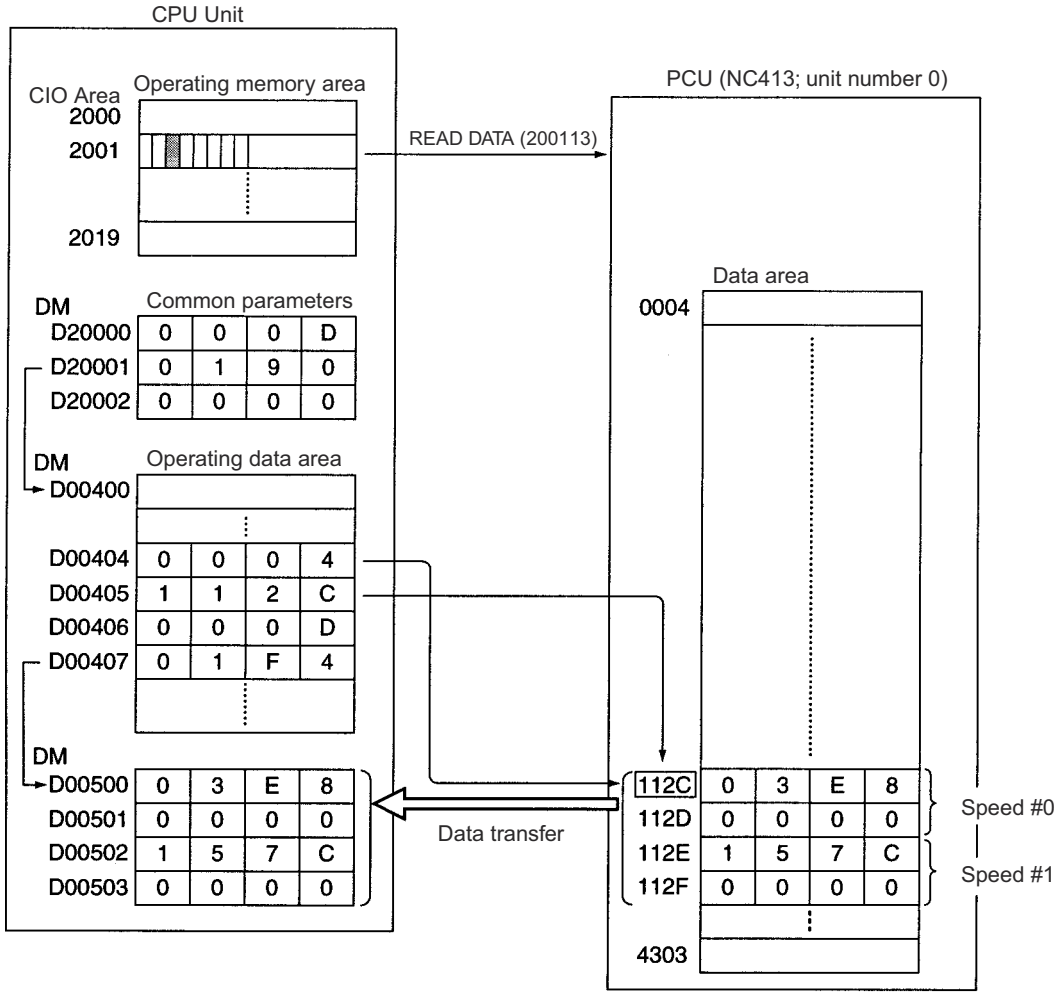

Program Example The work bit R1 is used to begin reading.

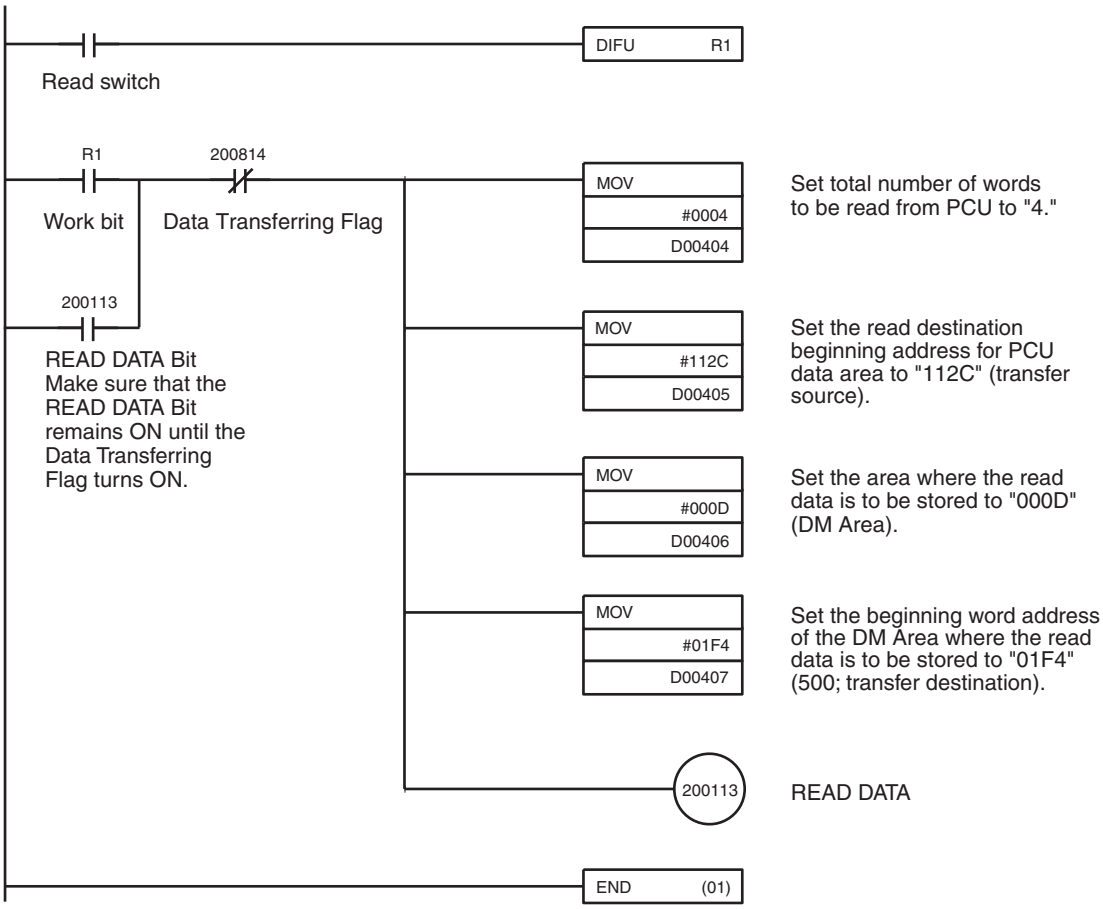

Contents of DM Area after read is completed.

D00500	0	3	E	8	Speed #0
D00501	0	0	0	0	
D00502	1	5	7	C	Speed #1
D00503	0	0	0	0	

5-4 Writing Data with IOWR

5-4-1 Outline

The following diagram outlines the way in which positioning sequences are written to the PCU.

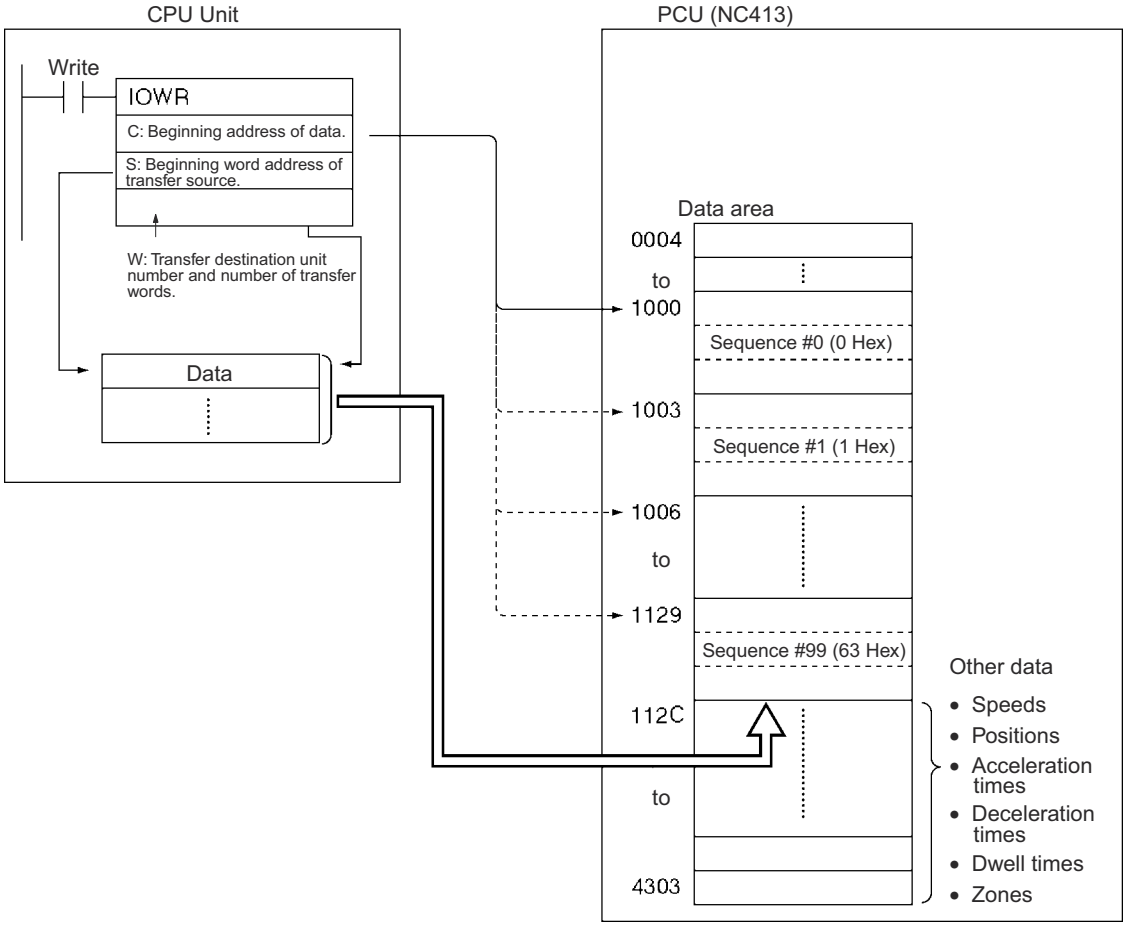

Data Writing Procedure

Refer to *5-4-2 IOWR: INTELLIGENT I/O WRITE* or CS/CJ-series Programmable Controllers Instruction Reference Manual (W340) for details on how to set the operands for the IOWR instruction.

1,2,3...

1. Set IOWR.
   - C: Beginning address of the data area in the PCU where the data is to be stored.
   - S: Beginning word address of the area in the CPU Unit in which the data has been set.
   - W: Unit number of the PCU which is the transfer destination, and the total number of words to be read.
2. Set the data.
   Set the data in the area designated by S.
3. Write the data.
   Execute IOWR.

5-4-2 IOWR: INTELLIGENT I/O WRITE

An explanation of how to use the IOWR instruction is given here.

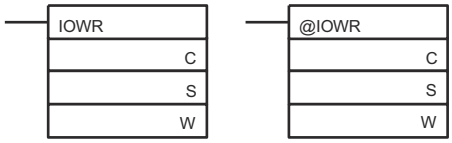

C: Control code, S: First source word, D: Destination unit number and total number of words written

Operand	Description
C	PCU address (Hex) Specifies the address (Hex) in the PCU to which data will be written.
S	First source word Specifies the first word in the CPU Unit from which data is to be transferred. The following areas can be specified as the source start word. Refer to the CPU Unit manuals for details on each address.

Area	Range
CIO Area	0000 to 6143
Work Area	W000 to 511
Holding Bit Area	H000 to 511
Auxiliary Area	A000 to 959
Timer Area	T0000 to 4095
Counter Area	C0000 to 4095
DM Area	D00000 to 32767
EM Area	E00000 to 32767
EM Area with bank designation	En_00000 to 32767 (n=0 to C)
Indirect DM/EM address, binary	@D00000 to 32767 @E00000 to 32767 @En_00000 to 32767 (n=0 to C)
Indirect DM/EM address, BCD	*D00000 to 32767 *E00000 to 32767 *En_00000 to 32767 (n=0 to C)

W	W+1	W
	Total number of words transferred (Hex)	Destination unit number (Hex)

Specify the destination unit number to which data will be transferred and the total number of words to transfer. The settable ranges are as follows:

W+1: 0001 to 0080 Hex (128 words) (Refer to *Precautions when Using IOWR below.)*

W: NC113/133 0000 to 005F Hex (unit numbers: 0 to 95)
NC213/233 0000 to 005F Hex (unit numbers: 0 to 95)
NC413/433 0000 to 005E Hex (unit numbers: 0 to 94)

Example: Transferring 10 words of data to unit number 3

#00090003 (total number of words to transfer: 0009 (9 words), unit number: 0003 (No. 3))

5-4-3 Error Code Treatment for IOWR

The following operation will occur when data is correctly set in the Position Control Unit using the IORW instruction.

- If pulse output from the Position Control unit is being prohibited, none of the current error codes will be changed and the operation will end.
- In all other cases, the error codes for all axes will be cleared to all zeros and the operation will end.

If the settings could not be made in the Position Control Unit because illegal data was written by IOWR, the error codes for all axes will be cleared to all zeros, errors codes will be output to the relevant axes, and the operation will end. If an IOWR format error (8701) occurs when IOWR is executed, however, the 8701 error code will be output for the X axis only.

As described above, if IOWR is executed when error codes already exist, the error codes will be cleared, so care is required if error codes are being used by the program, e.g., for interlocks.

5-4-4 Flags

When data is transferred using IOWR, the Error Flag (word n+8, bit 12), the ER Flag, and the Equals Flag can be used to check whether the transfer has been completed successfully. If the Error Flag (word n+8, bit 12) is ON, an error code will be output to word n+10 in the operating memory area. Check this error code to determine the cause of the error and correct it.

Flag	ON Condition	OFF Condition
ER	• The number of transfer words set in W is outside the range 0001 to 0080 Hex. • The unit number set in W is outside the range 0000 to 005F Hex. • A Special I/O Unit that is not compatible with the IOWR instruction has been specified. • A Special I/O Unit for which a setting error has been made or an error is being generated has been specified.	Anything else.
=	The transfer has been completed without error.	• The address set in C, or the area specified with this address and the number of write words setting, corresponds to only some, and not all, of the words used to store an item of data. For example, the Equals Flag would turn ON if the destination address set for a speed, which is stored in 2 words, was set to an address that corresponded to only the second word. • The address set in C, or the area specified with this address and the number of transfer words setting, is outside the range of PCU addresses. • The number of transfer words is set to 0. • Another write process is being executed. (Data is being written for a Data Transfer Bit, data is being written from the CX-Position, or data is being written using IOWR method 2.) • Data is being saved to flash memory. (Data is being saved for a SAVE DATA bit or data is being saved from the CX-Position.) • The has just been turned ON or restarted and is still performing initial processing.

5-4-5 Precautions when Using IOWR

IOWR is an instruction which transfers all specified data with a single execution. Therefore, it increases the cycle time for the ladder program by the time required to transfer the data.

Refer to *Appendix A Performance Characteristics* for details on the times required for transferring positioning sequences. Use them as reference values for setting cycle time monitoring time.

When using IOWR, be sure to transfer data in complete units, and do not start or end transfer in the middle of data. For example, with X-axis sequence #0, the data unit consists of three words (addresses: 1000 to 1002 Hex). If the transfer is started or ended part-way through, an IOWR format error (error code 8701) will be generated.

When transferring the origin search high speed or the origin search proximity speed, be sure to send both of these items together. If only one of these items is transferred, an IOWR format error (error code 8701) will be generated.

Up to 128 words of consecutive data can be transferred with the IOWR instruction. According to the PCU's internal processing conditions, however, there area two possible methods with which this data is written to the respective data area within the PCU. The method that is used will be determined automatically; it does not have to be specified in the ladder program.

<table>
<tr><th>Method</th><th>Outline</th><th>Characteristics</th></tr>
<tr><td>Method 1</td><td>The transferred data is immediately written to the data area.</td><td>The data specified with the IOWR instruction is written to the data area within one cycle. The number of items (words) that can be transferred with one IOWR instruction is limited as follows:
<table>
<tr><th></th><th>Data name</th><th>Number/Size</th></tr>
<tr><td rowspan="16">Parameter</td><td>I/O setting</td><td>1 (1 word)</td></tr>
<tr><td>Operation mode selection</td><td>1 (1 word)</td></tr>
<tr><td>Maximum speed</td><td>1 (2 words)</td></tr>
<tr><td>Initial speed</td><td>1 (2 words)</td></tr>
<tr><td>Origin search high speed/proximity speed</td><td>2 (4 words)</td></tr>
<tr><td>Origin compensation</td><td>1 (2 words)</td></tr>
<tr><td>Backlash compensation</td><td>1 (1 word)</td></tr>
<tr><td>Backlash compensation speed</td><td>1 (2 words)</td></tr>
<tr><td>Acceleration/deceleration curve</td><td>1 (1 word)</td></tr>
<tr><td>Origin search acceleration time</td><td>1 (2 words)</td></tr>
<tr><td>Origin search deceleration time</td><td>1 (2 words)</td></tr>
<tr><td>Positioning monitor time</td><td>1 (1 word)</td></tr>
<tr><td>CCW software limit</td><td>1 (2 words)</td></tr>
<tr><td>CW software limit</td><td>1 (2 words)</td></tr>
<tr><td>Pulse rate numerator</td><td>1 (1 word)</td></tr>
<tr><td>Pulse rate denominator</td><td>1 (1 word)</td></tr>
<tr><td>Initial one pulse speed</td><td>1 (1 word)</td></tr>
<tr><td rowspan="7">Data</td><td>Sequence data</td><td>1 (3 words)</td></tr>
<tr><td>Speed data</td><td>6 (12 words)</td></tr>
<tr><td>Position data</td><td>6 (12 words)</td></tr>
<tr><td>Acceleration times</td><td>12 (12 words)</td></tr>
<tr><td>Deceleration times</td><td>12 (12 words)</td></tr>
<tr><td>Dwell times</td><td>12 (12 words)</td></tr>
<tr><td>Zones</td><td>3 (12 words)</td></tr>
</table>
When changing position data and executing memory operation, it is possible to transfer the data to the PCU and send the instruction to start operation within one cycle.</td></tr>
<tr><td>Method 2</td><td>The data is written to the data area only after it has all been received in a receive buffer.</td><td>Up to 128 words of data can be transferred in one operation. If the number of words to be transferred is greater than the limits for method 1 listed above, method 2 will be used automatically.
With this method, because data is written to the data area only after it has all been received in the receive buffer, if the IOWR instruction is used more than once in the ladder program, it may take 2 or more cycles for transfer to be completed. (See the following example.) This is different from method 1, where data transfer is completed within one cycle.
If the IOWR instruction is used only once in the ladder program, it is possible to transfer the data to the PCU and send the instruction to start operation within one cycle, in the same way as method 1.</td></tr>
</table>

Example: Sending 200 Words of Speed and Position Data and Starting Operation

The following ladder program can be used to transfer 100 words (50 items) of speed data and 100 words (50 items) of position data using the IOWR instruction and start operation.

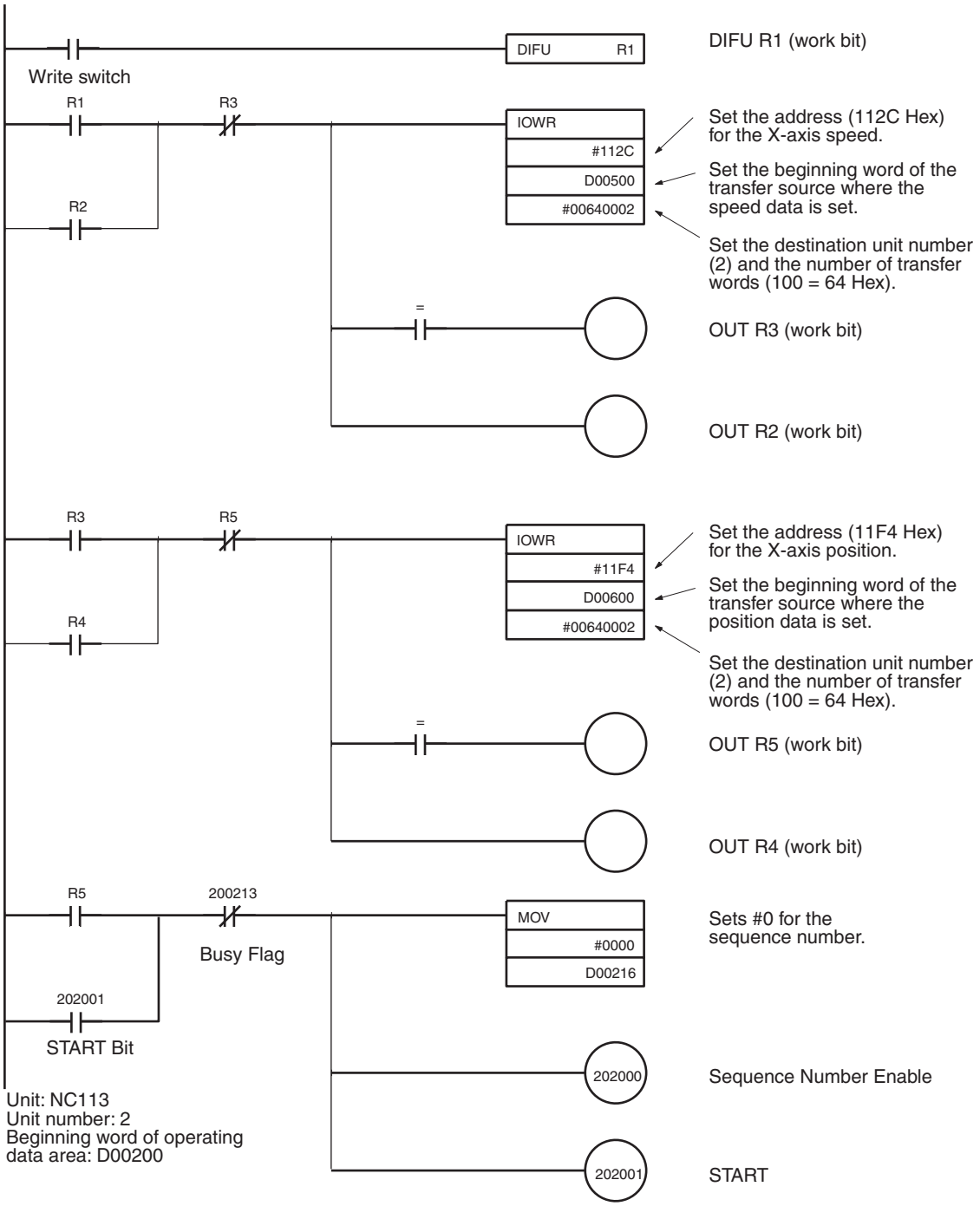

In the above ladder diagram, when the first IOWR instruction is executed, the Equals Flag turns ON and, at the same time, the data is transferred to the PCU. At the PCU, this data is first stored in the receive buffer. After this, the next IOWR instruction is executed. Because the data in the receive buffer has not been processed (i.e., to check that the data items are within the respective ranges and write the data to the data area), the Equals Flag, which is the completion flag for the IOWR instruction, does not turn ON. Therefore, the

second IOWR instruction is executed once more in the next cycle. Execution of this second instruction is repeated until all the data in the receive buffer has been processed. For this reason, it takes at least two cycles for transfer of all the data to be completed and the instruction to start to be output.

Note Depending on the timing of IOWR instructions, transfer errors may not be reflected in the CPU Unit. (For details, refer to *5-1 Transferring and Saving Data*.)

5-4-6 IOWR Program Example

A sample program is provided below for writing the indicated speed data to the PCU. The beginning word address of the transfer data is to be D00500, and the other settings are as indicated. The data will be transferred to the PCU designated as unit number 2.

Data	Address (transfer destination)	DM (transfer source)	Setting
Speed #0	112C 112D	00500 00501	03E8 (1,000 pps) 0000
Speed #1	112E 112F	00502 00503	157C (5,500 pps) 0000

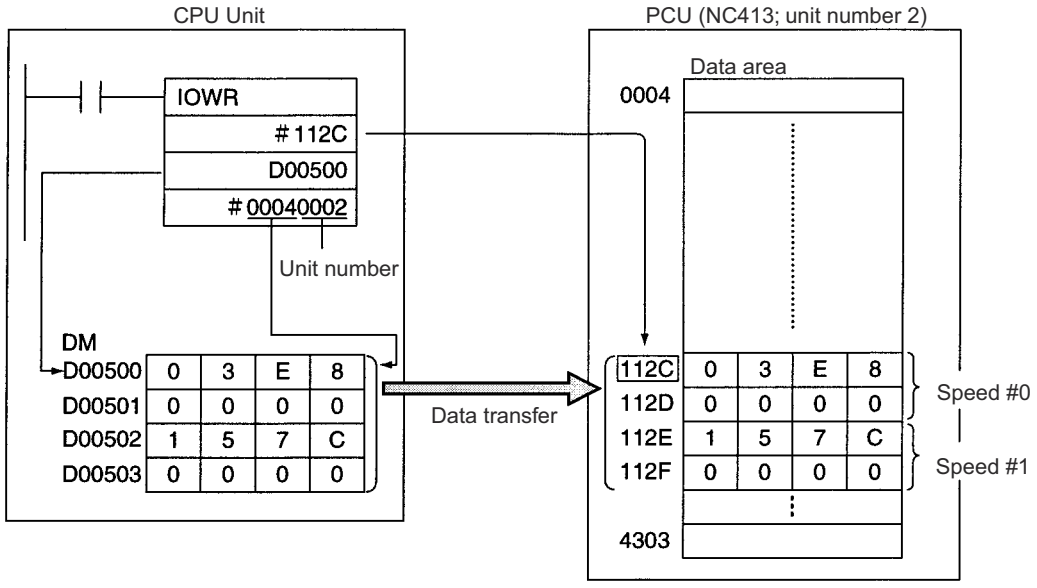

Program example

Work bit R1 is used to start writing. When debugging, it is a good idea to create a ladder program that refers to the ER Flag and Error Flag (word n+8, bit12).

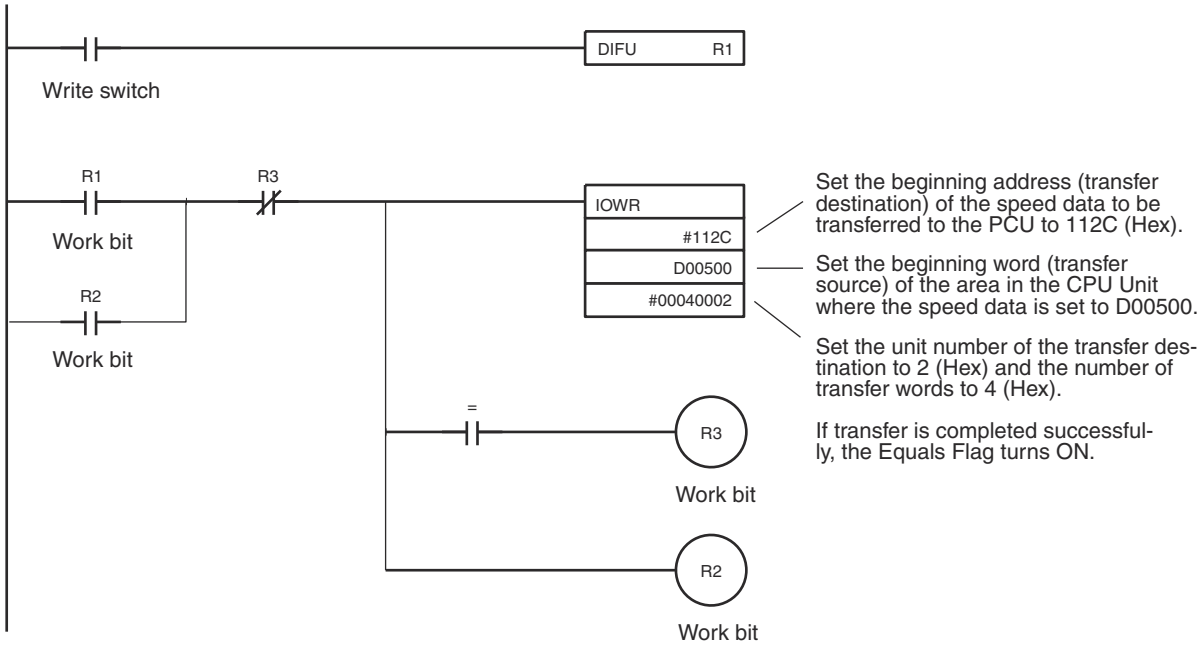

5-5 Reading Data with IORD

5-5-1 Outline

This section outlines how to read positioning sequences from a PCU. Using IORD, 128 words of data in consecutive addresses can be read at one time. Refer to *5-4 Writing Data with IOWR* for an outline.

5-5-2 READ DATA Procedure

Refer to *5-5-3 IORD: INTELLIGENT I/O READ* or CS/CJ-series Programmable Controllers Instruction Reference Manual (W340) for details on how to set the operands for IORD.

1,2,3...

1. Set IORD.
   - C: Beginning address of the PCU data area.
   - W: Unit number of the PCU reading the data and the total number of words to be read.
   - D: Beginning word address of the area in the CPU Unit where the read data will be stored.
2. Read the data.
   Execute IORD.

5-5-3 IORD: INTELLIGENT I/O READ

An explanation of how to use the IORD instruction is given here.

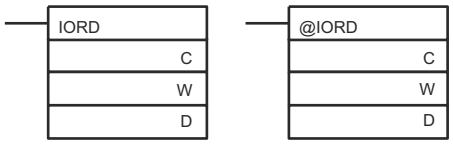

C: Control code, W: Source unit number and total number of data words read, D: First destination word

<table>
<tr><th>Operand</th><th>Description</th></tr>
<tr><td>C</td><td>PCU address (Hex)
Specifies the address in the PCU address to be read in hexadecimal.</td></tr>
<tr><td>W</td><td>W+1: Total number of words transferred (Hex)
W: Destination unit number (Hex)

Specifies the destination unit number from which data will be read and the total number of words that will be read. The settable ranges are as follows:
W+1: 0001 to 0080 Hex (128 words)
W: NC113/133 0000 to 005F Hex (unit numbers: 0 to 95)
NC213/233 0000 to 005F Hex (unit numbers: 0 to 95)
NC413/433 0000 to 005E Hex (unit numbers: 0 to 94)
Example: Reading 9 words of data from unit number 3
#00090003 (total number of words transferred: 0009 (9 words), unit number: 0003 (3)</td></tr>
<tr><td>D</td><td>First destination word
Specifies the first word of the CPU Unit to store the data that will be read.
Refer to the CPU Unit manuals for more details.
<table>
<tr><th>Area</th><th>Range</th></tr>
<tr><td>CIO Area (I/O Area etc.)</td><td>0000 to 6143</td></tr>
<tr><td>Work Area</td><td>W000 to 511</td></tr>
<tr><td>Holding Bit Area</td><td>H000 to 511</td></tr>
<tr><td>Auxiliary Area</td><td>A448 to 959</td></tr>
<tr><td>Timer Area</td><td>T0000 to 4095</td></tr>
<tr><td>Counter Area</td><td>C0000 to 4095</td></tr>
<tr><td>DM Area</td><td>D00000 to 32767</td></tr>
<tr><td>EM Area</td><td>E00000 to 32767</td></tr>
<tr><td>EM Area with bank designation</td><td>En_00000 to 32767 (n=0 to C)</td></tr>
<tr><td>Indirect DM/EM address, binary</td><td>@D00000 to 32767
@E00000 to 32767
En_00000 to 32767 (n=0 to C)</td></tr>
<tr><td>Indirect DM/EM address, BCD</td><td>*D00000 to 32767
*E00000 to 32767
*En_00000 to 32767 (n=0 to C)</td></tr>
</table></td></tr>
</table>

5-5-4 Error Code Treatment for IORD

The following operation will occur when data is correctly read from the Position Control Unit using the IORD instruction.

- If error code 8700 already exists, the 8700 error codes will be cleared and the operation will end.
- If any other error code exists, none of the current error codes will be changed and the operation will end.

If an IORD format error (8700) occurs when IORD is executed, the 8700 error code will be output for the X axis only.

5-5-5 Flags

When data is transferred using IORD, the Error Flag (word n+8, bit 12), the ER Flag and the Equals Flag can be used to check whether the transfer has been completed successfully. If the Error Flag (word n+8, bit 12) is ON, an error code will be output to n+10 in the operating memory area. Check this error code to determine the cause of the error and correct it.

Flag	ON Condition	OFF Condition
ER	• The number of transfer words set in W is outside the range 0001 to 0080 Hex. • The unit number set in W is outside the range 0000 to 005F Hex. • A Special I/O Unit that is not compatible with the IORD instruction has been specified. • A Special I/O Unit for which a setting error has been made or an error is being generated has been specified.	Anything else.
=	The transfer has been completed without error.	• The address set in C, or the area specified with this address and the number of transfer words setting, corresponds to only some, and not all, of the words used to store an item of data. For example, the Equals Flag would turn ON if the destination address set for a speed, which is stored in 2 words, was set to an address that corresponded to only the second word. • The address set in C, or the area specified with this address and the number of transfer words setting, is outside the range of PCU addresses. • The number of transfer words is set to 0. • Another write process is being executed. • Data is being saved to flash memory. (Data is being saved for a SAVE DATA bit or data is being saved from the CX-Position.) • The has just been turned ON or restarted and is still performing initial processing.

5-5-6 Precautions when Using IORD

IORD is an instruction which transfers all specified data with a single execution. Therefore, it increases the cycle time for the ladder program by the time required to transfer the data.

Refer to *Appendix A Performance Characteristics* for details on the times required for transferring positioning sequences. Use them as reference values for setting cycle time monitoring time.

When using IORD, be sure to transfer data in complete units, and do not start or end transfer in the middle of data. For example, with X axis sequence #0, the data unit consists of three words (addresses: 1000 to 1002). If the transfer

is started or ended part-way through, an IORD format error (error code 8700) will be generated.

Using IORD, a maximum of 128 words of data in consecutive addresses can be transferred at one time.

5-5-7 IORD Program Example

In this example, speeds #0 and #1 written in *5-4 Writing Data with IOWR* are read. The conditions to be set are the same as those used in the example of writing the data. The beginning word for the DM Area where the read data is to be stored is set at D00500.

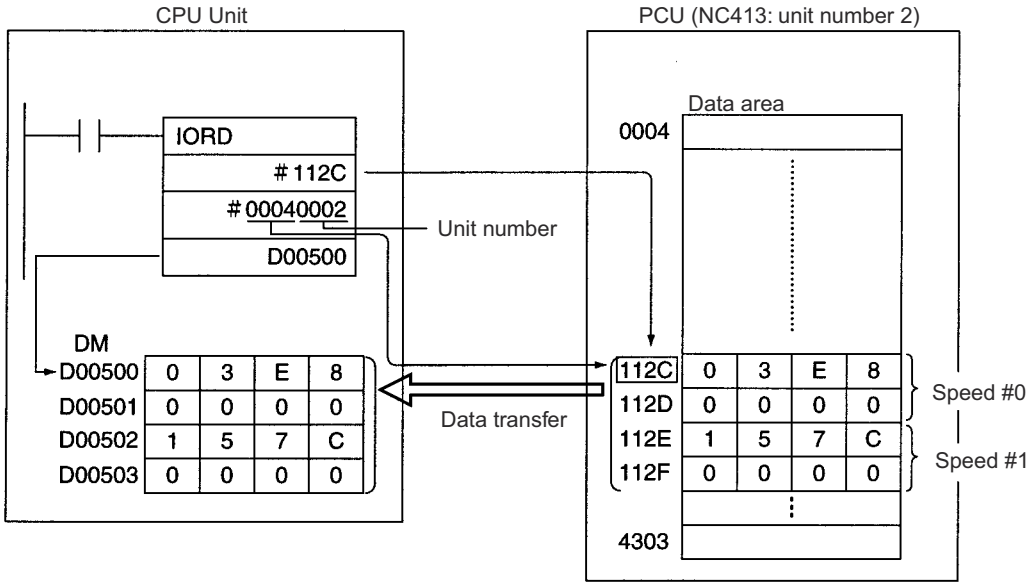

Note Depending on the timing of IORD instructions, transfer errors may not be reflected in the CPU Unit. (For details, refer to *5-1 Transferring and Saving Data*.)

Program Example

The work bit R1 is used to begin reading. When debugging, it is a good idea to create a ladder program that refers to the ER Flag and Error Flag (word n+8, bit12).

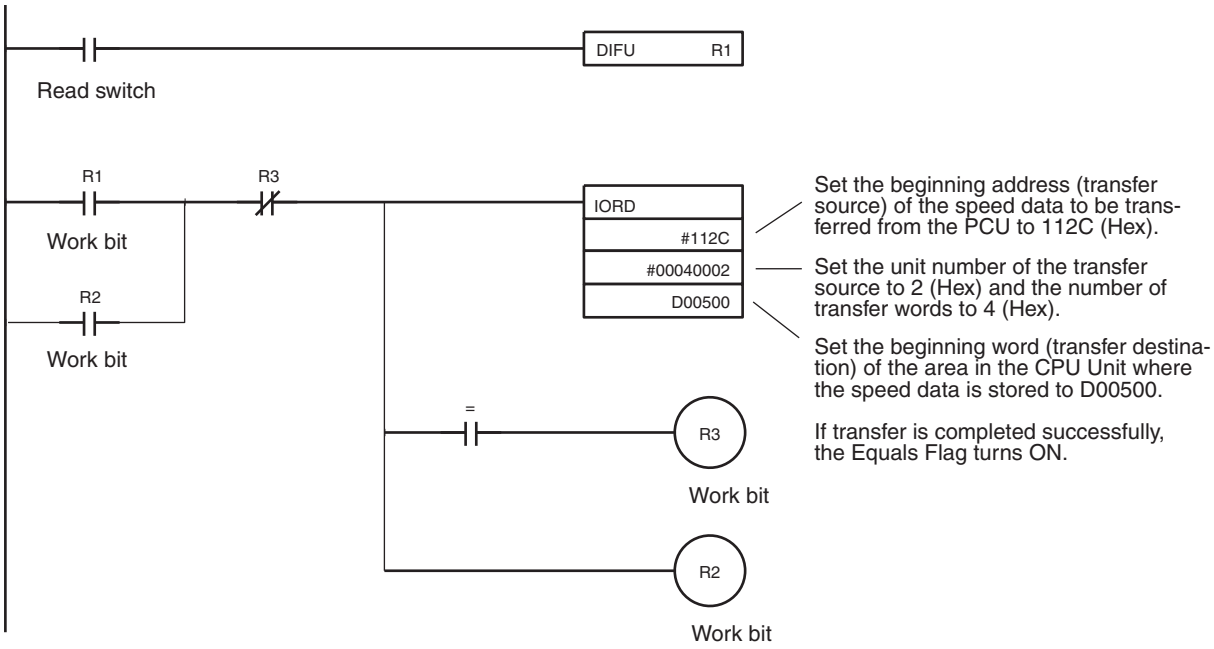

Contents of DM Area after read is completed.

D00500	0	3	E	8	Speed #0
D00501	0	0	0	0	
D00502	1	5	7	C	Speed #1
D00503	0	0	0	0	

5-6 Saving Data

Data transferred to the PCU will be erased either when the power to the Programmable Controller is turned OFF or when the PCU is restarted. To preserve the data that has been transferred, it must be saved in the PCU's flash memory. Once it has been saved, it can be read out and used the next time the power to the PCU is turned on or restarted. When the data is saved, all data including parameters existing at that point in time are saved.

Note

1. Do not turn OFF the power or restart the PCU while data is being saved. It may cause a failure in the PCU's internal flash memory, or cause the PCU to operate abnormally.
2. If a failure does occur in the flash memory, a flash memory error (error code 9300) will be generated when data is saved. Saving data can take as long as 30 seconds.
3. Only save data when all axes are stopped and no other commands are being executed. Otherwise the data will not be saved, and a multiple start error (error code 8000) will result.

5-6-1 Flash Memory

The contents of the PCU's internal memory are lost when the power supply is turned OFF or when the PCU is restarted. By saving the contents of the internal memory to the flash memory, parameters and other data can be retained.

The following types of data can be saved in the flash memory:

- Axis parameters
- Positioning sequences
- Speeds
- Acceleration and deceleration times
- Dwell times
- Zones

Note The data for the number of axes for the particular PCU being used is all saved at once.

Parameters and other data that have been saved to flash memory are read to the PCU's internal memory when the PCU is powered up or restarted. If the parameters or other data are corrupted at that time, a parameter destruction error (error code 0001) or data destruction error (error code 0002) will be generated and the PCU will be started up using the initial values (i.e., the factory settings) or the parameters and data that had been saved prior to the last save to flash memory.

If parameters or data are lost, no operation other than data transfer or data saved can be received. After transferring the data, save the data and turn the power OFF and then ON again, or restart the PCU.

5-6-2 Data Saving Procedure

Data can be saved using either the SAVE DATA Bit in the operating memory area or using CX-Position. For details of saving data using CX-Position, refer to the CX-Position Operation Manual (W433).

Beginning Words of Operating Memory Area, Operating Data Area, and Parameter Areas

The beginning words of the operating memory area, the operating data area and common parameter area used for a PCU are determined (or set) according to the following.

- Beginning word of the operating memory area, n = CIO 2000 + 10 × unit number
- Beginning word of the common parameter area, m = D20000 + 100 × unit number
- Beginning word of the operating data area, l, is specified in m and m+1.

Word	Name	Bit	Reference
m	Operating data area designation	00 to 15	*SECTION 4*
m+1	Beginning word of operating data area	00 to 15	
m+2	Axis parameter designation	00 to 15	

Operating Memory Area

When the SAVE DATA Bit (word n+1, bit 14) is turned from OFF to ON, all parameters and data are saved to flash memory.

Name	Model	Operating memory area	Bit	Contents
SAVE DATA	NC4□3 NC2□3 NC1□3	n+1 n+1 n+1	14	Starts saving data at the rising edge.
Data Transferring Flag	NC4□3 NC2□3 NC1□3	n+8 n+4 n+2	14	1: Data is being saved 0: Power up or restart; saving completed; saving unsuccessful

5-6-3 Timing Chart for Saving Data

Data cannot be saved and transferred at the same time. Attempting to do so will result in a multiple start error (error code 8000). It is also not possible to save data while pulses are being output. The following diagram is a timing chart for saving data.

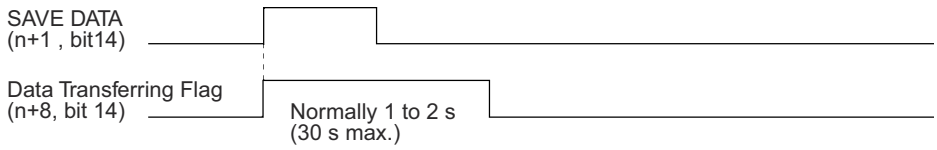

When the data saving operation has been completed, the Data Transferring Bit (word n+8, bit14) is turned from ON to OFF.

5-7 Transferring Data with CX-Position

It will be possible to use the CX-Position Support Software to read, write and save data, and to monitor the operating status of the PCU.

Outline

CX-Position is software that can be used for setting all kinds of data used by a PCU as well as for monitoring the operating status of the PCU.

Creating and Transferring Data

Refer to the CX-Position Operation Manual (W433) for details on its operation. While CX-Position is used to download data, or to save data to flash memory, the Data Transferring Flag will be ON.

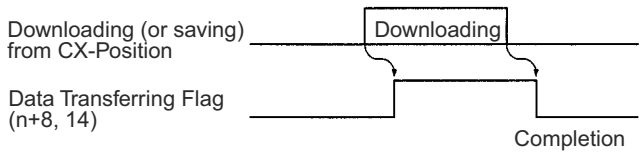

Note Do not carry out transfer operations from more than one CX-Position for the same PCU at the same time. There is a probability of the data transfer not being completed successfully, and of abnormal operation resulting.

SECTION 6
Defining the Origin

This section explains the origin search and origin return operations. With memory operation, if positions are designated by absolute values, or if the ABSOLUTE MOVEMENT command is executed by direct operation, it will be essential to execute an origin search and establish the origin before positioning.

Origin return is used to return the axis to the origin from any given location. Any location can be made the origin by using the PRESENT POSITION PRESET command to change the present position to 0. Refer to *6-6 Present Position Preset* for information on resetting the present position.

6-1 Outline 146
6-2 Origin Search Procedure 147
6-3 Data Settings Required for Origin Search 148
6-3-1 Beginning Words of Operating Memory Area, Operating Data Area, and Parameter Areas 148
6-3-2 Axis Parameter Area 149
6-3-3 Operating Memory Area 150
6-3-4 Allocation of Operating Data Areas (Supported for Unit Version 2.2 or Later) 151
6-4 Origin Search Operation 151
6-4-1 Operation Pattern Settings for Origin Search 151
6-4-2 Details of Parameters 151
6-4-3 Operation Mode Settings 155
6-4-4 Origin Search Operation and Origin Detection Direction Settings . 160
6-4-5 Operation Pattern With Origin Compensation 165
6-5 Origin Search Timing Charts 166
6-5-1 Without Origin Compensation 166
6-5-2 With Origin Compensation 167
6-5-3 Origin Search Deceleration Stop 169
6-5-4 Emergency Stop of Origin Search 170
6-6 Present Position Preset 171
6-6-1 Outline of Operation 171
6-6-2 Beginning Words of Operating Memory Area, Operating Data Area, and Parameter Areas 171
6-6-3 Operating Memory Area Allocation and Operating Data Area Settings 171
6-6-4 Timing Chart 172
6-7 Origin Return 172
6-7-1 Allocation of Operating Memory Area and Setting of Operating Data Area 172
6-7-2 Timing Chart 173
6-8 Z-phase Margin 174
6-8-1 Description 174
6-8-2 Calculating the Z-phase Margin (Example) 174

6-1 Outline

When performing positioning for a system in terms of absolute positions in that system, it is first necessary to define the origin. For example, in the X-Y plane shown below, before positioning to (X,Y) = (100 mm,200 mm), it necessary to establish where the origin is, i.e., it is necessary to determine the origin.

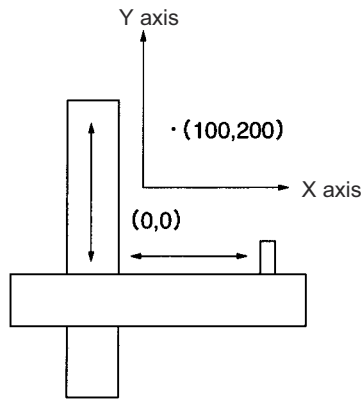

With the PCU, the origin can be defined in the two ways given below.

Name	Description
ORIGIN SEARCH	Using this method, the motor controlling movement is actually operated and the origin is determined using limit input signals, an origin proximity input signal, and an origin input signal. A photoelectric sensor or the Z-phase signal from an encoder can be used as the origin input signal.
PRESENT POSITION PRESET	The origin can be determined by forcibly setting the position at which the motor is stopped to the desired value.

In addition, the PCU also features the following origin reset function, which can be used to reset the position to the origin set with the above methods.

Name	Description
ORIGIN RETURN	With the motor stopped, the position is reset to the origin set by the origin search or present position preset functions.

The motor can be operated without determining the origin (although origin return cannot be used). Operation will, however, proceed in the way described below.

Function		Operation
JOG (speed feeding)		Before pulses are output, the present position is taken to be 0.
ORIGIN RETURN		Cannot be used. If an attempt to use this function is made, a present position unknown error (error code 5040) will be generated.
Direct operation	ABSOLUTE MOVEMENT	Cannot be used. If an attempt to use this function is made, a present position unknown error (error code 5040) will be generated.
	RELATIVE MOVEMENT	Before pulses are output, the present position is taken to be 0. The specified number of pulses are then output.
	INTERRUPT FEEDING	Before pulses are output, the present position is taken to be 0. If an interrupt input signal is subsequently input, the position at that point in time is taken to be 0, and the specified number of pulses are output.
Memory operation		With memory operation, JOG, ABSOLUTE MOVEMENT, RELATIVE MOVEMENT, and INTERRUPT FEEDING can be operated in combination but positioning cannot be performed for an absolute position. If an attempt to perform absolute positioning is made, a present position unknown error (error code 5040) will be generated.

Note If an attempt to execute TEACH is made, a present position unknown error (error code 5040) will be generated.

6-2 Origin Search Procedure

The data settings required to perform origin search for the X axis are given here as an example.

1,2,3...

1. Set the common parameters. (Refer to *4-2 Common Parameter Area*.)
   m: Set the operating data area either to DM or to EM.
   m+1: Set the beginning word of the operating data area (I).
   m+2: Designate the axis parameters.
2. Set the axis parameters.
   Set the I/O settings, operation mode selection, origin search operation, origin detection method, initial speed, origin search high speed, origin search proximity speed, origin compensation, origin search direction, origin search acceleration time, origin search deceleration time, and origin search preset (supported for unit version 2.2 or later).
3. Power up again or restart.
   The data for the common parameters set in 1 above is enabled.
4. Execute ORIGIN SEARCH.
   Turn ON the ORIGIN SEARCH Bit in the operating memory area. Alternatively, set the position to be preset and then turn ON the ORIGIN SEARCH Bit in the operating memory area (supported for unit version 2.2 or later).

Note The origin search acceleration time set with the parameters is the time taken to reach the maximum speed also set with the parameters. Similarly, the origin search deceleration time set with the parameters is the time taken to go

from the maximum speed until output of the designated speed has been completed.

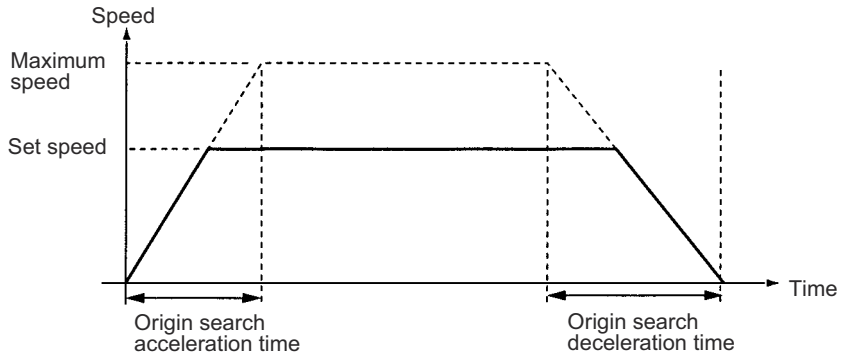

6-3 Data Settings Required for Origin Search

A simple explanation of the axis parameter and operating memory area settings that are used when ORIGIN SEARCH is executed are given here. For more details of the settings and setting methods, refer to *4-3 Axis Parameter Area*.

6-3-1 Beginning Words of Operating Memory Area, Operating Data Area, and Parameter Areas

The beginning words of the operating memory area, operating data area, and common parameter area used for a Position Control Unit (PCU) are determined (or set) according to the following.

- Beginning word of the operating memory area, n = CIO 2000 + 10 × unit number
- Beginning word of the common parameter area, m = D20000 + 100 × unit number
- Beginning word of the operating data area, l, is specified in m and m+1.

Set the beginning words of the operating data area and designate the axis parameters used with the common parameters as shown below.

Word	Name	Bit	Reference
m	Operating data area designation	00 to 15	*SECTION 4*
m+1	Beginning word of operating data area	00 to 15	
m+2	Axis parameter designation	00 to 15	

6-3-2 Axis Parameter Area

Name	Word (in axis parameter area)				Bit	Details
	NC1□3	NC2□3	NC4□3			
	X axis	Y axis	Z axis	U axis		
I/O setting	m+4	m+32	m+60	m+88	04 to 06	08 03 Limit input signal type 0: N.C. input, 1: N.O. input Origin proximity input signal type 0: N.C. input, 1: N.O. input Origin input signal type 0: N.C. input, 1: N.O. input
Operation mode Origin search operation Origin detection method Origin search direction Origin search preset (supported for unit version 2.2 or later)	m+5	m+33	m+61	m+89	00 to 03 04 to 07 08 to 11 12 to 15	15 00 Operation mode 0 to 3: Modes 0 to 3 Origin search operation 0: Reverse mode 1 1: Reverse mode 2 2: Single-direction mode 3: Reverse mode 3 Origin detection method 0: With origin proximity input signal reversal 1: Without origin proximity input signal reversal 2: Origin proximity input signal not used 3: Limit input signal used instead of origin proximity input signal Bit 12: Origin search direction (0: CW direction; 1: CCW direction) Bit 13: Origin search preset (0: Not set; 1: Set)
Maximum speed	m+6	m+34	m+62	m+90	00 to 15 (rightmost)	15 Leftmost 00 15 Rightmost 00 Set range: 0 to 7A120 Hex (0 to 500,000 pps) Only the initial speed can be set to 0.
	m+7	m+35	m+63	m+91	00 to 15 (leftmost)	
Initial speed	m+8	m+36	m+64	m+92	00 to 15 (rightmost)	
	m+9	m+37	m+65	m+93	00 to 15 (leftmost)	
Origin search high speed	m+10	m+38	m+66	m+94	00 to 15 (rightmost)	
	m+11	m+39	m+67	m+95	00 to 15 (leftmost)	
Origin search proximity speed	n+12	m+40	m+68	m+96	00 to 15 (rightmost)	
	n+13	m+41	m+69	m+97	00 to 15 (leftmost)	

Name	Word (in axis parameter area)				Bit	Details
	NC1□3	NC2□3	NC4□3			
	X axis	Y axis	Z axis	U axis		
Origin compensation	m+14	m+42	m+70	m+98	00 to 15 (rightmost)	15 Leftmost 00 15 Rightmost 00 Set range: C0000001 to 3FFFFFFF Hex (–1,073,741,823 to 1 073 741 823
	m+15	m+43	m+71	m+99	00 to 15 (leftmost)	
Origin search acceleration time	m+20	m+48	m+76	m+104	00 to 15 (rightmost)	15 Leftmost 00 15 Rightmost 00 Set range: 0 to 3D090 Hex (0 to 250,000 ms)
	m+21	m+49	m+77	m+105	00 to 15 (leftmost)	
Origin search deceleration time	m+22	m+50	m+78	m+106	00 to 15 (rightmost)	
	m+23	m+51	m+79	m+107	00 to 15 (leftmost)	

Note

1. Set the origin search proximity speed to 10 kpps or below.
   (Origin input signal type: N.O. input: 10 kpps max.; N.C. input: 1 kpps max.)
   If a higher value is set, it may not be possible to stop at the origin accurately.
2. When setting using the IOWR instruction, set both the origin search high speed and origin search proximity speed at the same time. It is not possible to set only one of these settings.

6-3-3 Operating Memory Area

The origin search is started when the ORIGIN SEARCH Bit is turned ON.

Name	Model	Operating memory area				Bit	Details
		NC113	NC213	NC413			
		X axis	Y axis	Z axis	U axis		
ORIGIN SEARCH	NC413 NC213 NC113	n n n	n+2 n+2	n+4	n+6	06	↑ : ORIGIN SEARCH start
No Origin Flag	NC413	n+8	n+11	n+14	n+17	06	1: No origin, 0: Origin
Origin Stop Flag	NC213	n+4	n+7			07	1: Stopped at origin, 0: Other
Position Completed Flag	NC113	n+2				05	↑ : Positioning completed
Busy Flag						13	1: Busy

6-3-4 Allocation of Operating Data Areas (Supported for Unit Version 2.2 or Later)

To set the position where the origin search is completed to a desired position, enable the origin search preset function (e.g., bit 13 in word m+5 for the X axis) and set the position data.

Name	Model	Operating memory area				Bit	Details
		X axis	Y axis	Z axis	U axis		
Positioning command	NC4□3 NC2□3 NC1□3	I+8 I+9 I+8 I+9 I+8 I+9	I+20 I+21 I+20 I+21	I+32 I+33	I+44 I+45	00 to 15 (rightmost) 00 to 15 (leftmost)	15 Leftmost 00 15 Rightmost 00 Setting range: C0000001 to 3FFFFFFF Hex (–1,073,741,823 to 1,073,741,823)

6-4 Origin Search Operation

6-4-1 Operation Pattern Settings for Origin Search

Operation patterns when determining the origin using origin search are determined by the settings of 5 of the parameters described in *6-3 Data Settings Required for Origin Search*.

1,2,3...

1. Operation mode:
   - Set the optimum operation mode for the driver (servomotor, stepping motor) used.
   - Set to mode 0 for a stepping motor and set to modes 1, 2, or 3 for a Servo Drive. (See note.)
2. Mode for origin search operation:
   Set the movement of the motor during origin search.
3. Origin detection method:
   Set the method used for detecting the origin.
4. Origin search direction:
   Set the direction for origin search.
5. Origin compensation data:
   If fine adjustment is required after the origin has been determined (e.g., if there is inaccuracy in the position at which the proximity sensor turns ON or if the motor has been changed), set the amount of compensation (the origin compensation value) required.

   Note There are drivers for stepping motors that can output positioning completed signals in the same way as Servo Drives. It is possible to set modes 1 or 2 if this kind of driver is used.

6-4-2 Details of Parameters

The settings for the 5 parameters that determine the operation pattern for origin search are given here. For data configurations for each of the parameters, refer to *4-3 Axis Parameter Area*.

Operation Mode

The origin mode parameters determined the I/O signals used for origin search. The I/O signals used for each mode are given in the following table.

<table>
<tr><th rowspan="2">Operation mode</th><th colspan="3">I/O signals</th><th rowspan="2">Operation when origin is detected during deceleration from origin search high speed</th></tr>
<tr><th>Origin input signal (selected using the origin detection method parameter)</th><th>Error counter reset output</th><th>Positioning completed input</th></tr>
<tr><td>0</td><td rowspan="3">Origin is determined by detecting the rising edge of the origin input signal.</td><td>Not used.</td><td rowspan="2">Not used.
After the origin has been detected, origin search operation is terminated.</td><td>The origin input signal during deceleration is detected. An origin input signal error (error code 6202) will be generated, and operation will decelerate to a stop.</td></tr>
<tr><td>1</td><td rowspan="2">Turns ON for 20 ms when origin is detected.</td><td rowspan="2">The origin input signal during deceleration is not detected. Operation is stopped and the origin is determined when the origin input signal is received after the origin search proximity speed has been reached.</td></tr>
<tr><td>2</td><td rowspan="2">After the origin has been detected, origin search operation will not be terminated until a positioning completed input signal has been received from the driver. (The Busy Flag will stay ON during this time.)</td></tr>
<tr><td>3</td><td>The origin is detected at the driver using the Servo Drive's origin adjustment function. The origin input signal at the PCU is not used. Mode 3 cannot be used with drivers that do not have the origin adjustment function.</td><td>Used as output for the origin adjustment command.</td><td>Because origin detection is not carried out at the PCU, this situation does not arise.</td></tr>
</table>

Note Specify mode 3 when using a Servo Drive with an origin adjustment function.

Set the operation according to the driver used and the application.

Driver	Explanation	Operation mode
Stepping motor driver		0
Servo Drive (see note)	Use this mode to reduce the operating time applications where a high degree of positioning accuracy is not required. (The positioning completed signal at the Servo Drive is not used.)	1
	Use this mode for a high degree of positioning accuracy. (The positioning completed signal at the Servo Drive is not used.)	2
	Use this mode for a Servo Drive with an origin adjustment function.	3

Note There are drivers for stepping motors that can output positioning completed signals in the same way as Servo Drives. It is possible to set modes 1 or 2 if this kind of driver is used.

Origin Search Operation

The following 4 modes are available for origin search operation.

- Origin search operation
  - Reverse modes - - - - - - - - - - - - There are two patterns possible for origin search operation: the origin search direction and the opposite direction.
    - Reverse mode 1 - - - - - - Direction reversed when input is received from the limit signal in the origin search direction.
    - Reverse mode 2 - - - - - - Operation is stopped and an error is generated when input is received from the limit signal in the origin search direction.
    - Reverse mode 3 - - - - - - Basic functions are the same as with reverse mode 2. When the direction is reversed at the origin proximity input signal, however, shock to mechanical systems is reduced.
  - Single-direction mode - - - Origin search is performed in one direction only.

The origin search operation settings are as follows:

0: Reverse mode 1
1: Reverse mode 2
2: Single-direction mode
3: Reverse mode 3

Origin Detection Method

The origin detection method specifies settings related to the origin proximity input signal. Depending on the setting of the axis parameter, the following 4 patterns can be selected.

Setting	Origin detection method	Origin input signal detection	Notes
0	With origin proximity input signal reversal	Origin input signal detected after OFF→ON→OFF of origin proximity input signal.	---
1	Without origin proximity input signal reversal	Origin input signal detected after OFF→ON of origin proximity input signal.	---
2	Origin proximity input signal not used	The origin proximity input signal is not used.	Origin search is performed at origin search proximity speed only. (Refer to the following diagrams.)
3	Limit input signal used instead of origin proximity input signal	Origin input signal detected after ON→OFF of limit input signal in opposite direction to origin search direction.	Only possible in single-direction mode. If executed in reverse modes 1 or 2, an origin detection method error (error code 1607) is generated and settings are not possible.

Note Use a sensor with no chattering, such as a photoelectric sensor, for the origin proximity input signal when the origin detection method is set to 0 (with origin proximity input signal reversal) and for the limit signal input in the opposite direction to the origin search direction when the origin detection method is set to 3 (limit input signal used instead of origin proximity input signal). Using a switch with contacts may cause the position of the origin to be displaced due to chattering.

When origin search is executed, the operation will differ according to whether or not origin proximity signal is used in the way shown below.

With an Origin Proximity Input Signal

There is no deceleration when stopping from the origin search proximity speed with the origin input signal.

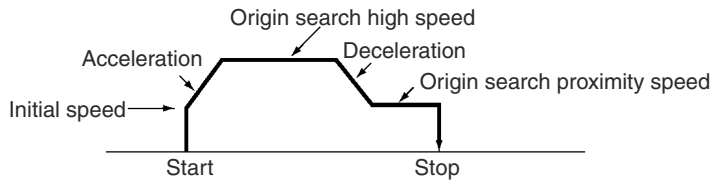

Without an Origin Proximity Input Signal

The origin search is conducted at low speed (the origin search proximity speed). There is no deceleration when stopping with the origin input signal.

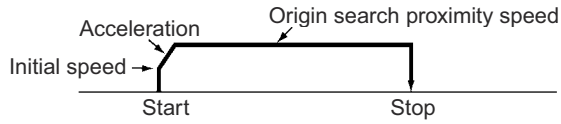

If the origin search proximity speed is less than or equal to the initial speed, there will be no acceleration.

Origin Search Direction

This setting determines the direction when detecting the origin input signal. During origin search, the origin input signal in the direction of the origin search direction is always being detected.

0: CW direction
1: CCW direction

Origin Compensation Value

The origin compensation value setting determines the amount of adjustment that is applied when adjustment is necessary after the origin has been determined (e.g., if there is inaccuracy in the position at which the proximity sensor turns ON or if the motor has been changed). After the origin is initially detected using origin search, the number of pulses specified with this setting are output, the present position is set to 0, and at the same time, the origin is established (the No Origin Flag turns OFF).

Setting range: C0000001 to 3FFFFFFF Hex (–1,073,741,823 to 1,073,741,823)

The operation patterns that are determined by the above settings are illustrated on the following pages.

6-4-3 Operation Mode Settings

Mode 0

An open collector output signal such as a sensor is connected to the origin input signal, and the origin input signal response time is 0.1 ms. (N.O. contact setting)

In this mode, an origin input signal error (error code 6202) will be generated if an origin input signal is input during the deceleration from origin search high speed to origin search proximity speed which is initiated by the input of an origin proximity input signal (or a limit input signal if the origin detection method is set to 3).

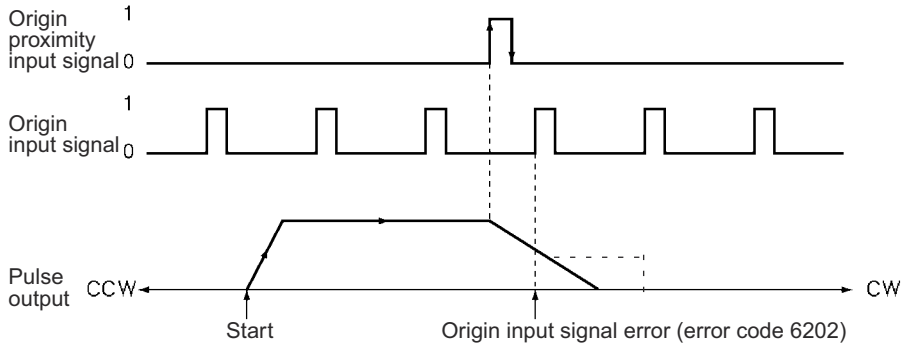

Mode 1

The Z-phase signal from the Servo Drive is connected to an origin input signal. An origin input signal is input and, within an interval of approximately 20 ms after the stop, a error counter reset signal is output.

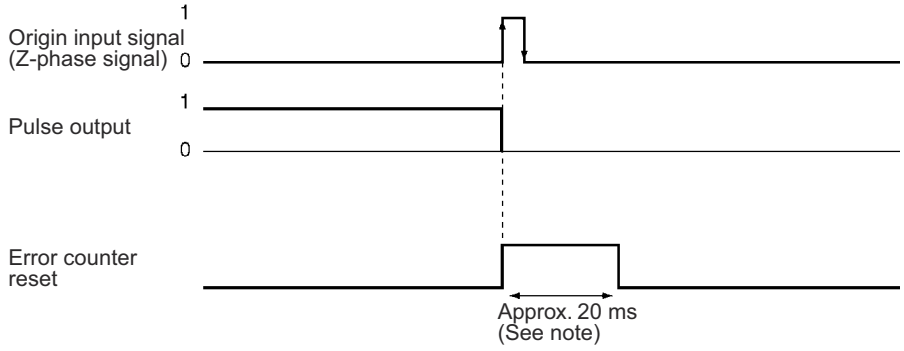

In this mode, if an origin input signal is input during the deceleration from origin search high speed to origin search proximity speed which is initiated by

the input of an origin proximity input signal, positioning will be stopped by the first origin input signal after the deceleration has been completed.

Note During error counter reset output, if the origin input signal turns ON again, the Servo Drive's error counter reset function is deemed to have been used, and the error counter reset output is turned OFF. In this case, the output time of the error reset counter will be less than 20 ms.

Origin Detection Method: 0

When the deceleration time is short, such as in cases where positioning begins from within the origin proximity area, an origin input signal will be detected immediately after the falling edge of the origin proximity input signal. Be sure that the origin proximity input signal dog is long enough (i.e., more than the deceleration time).

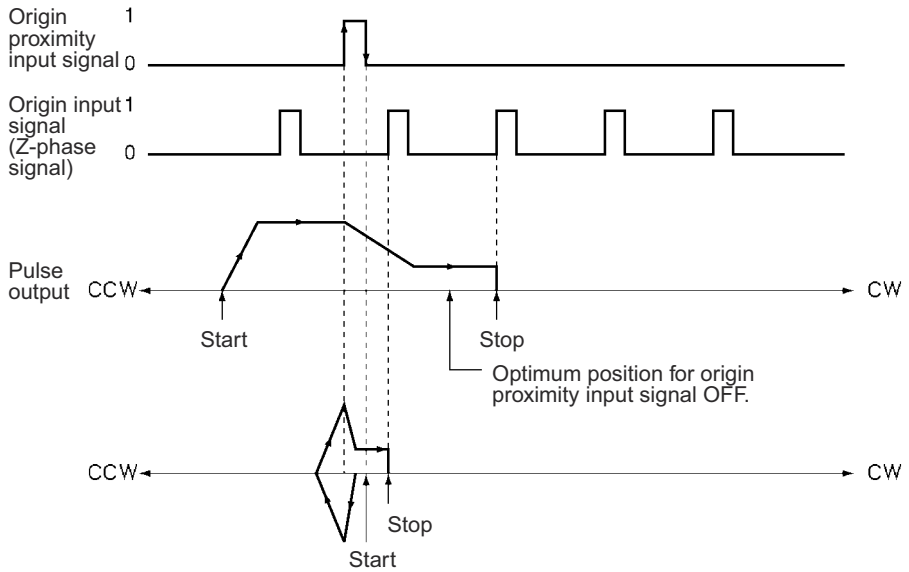

Origin Detection Method: 1

If an origin proximity input signal is input during deceleration, the stop position will vary according to the length of the deceleration time.

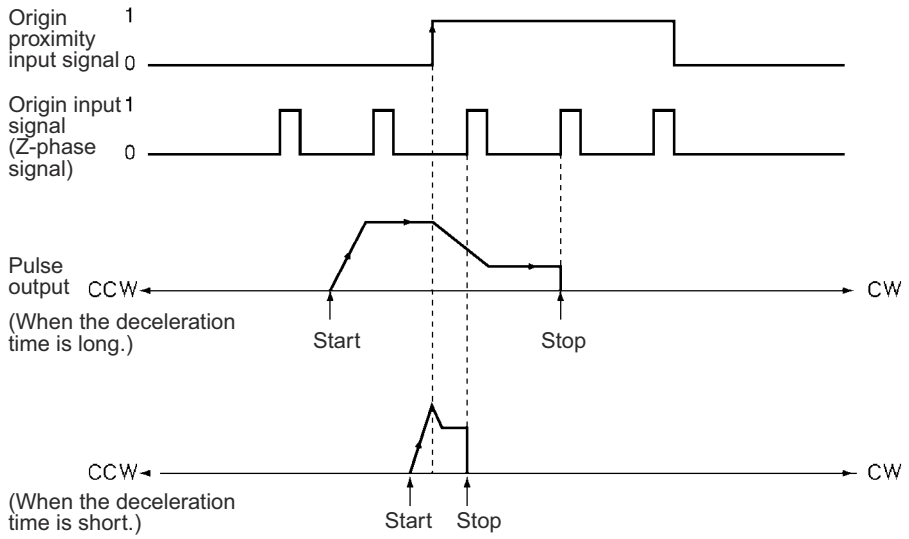

Mode 2

This mode is similar to mode 1, except that the positioning completed input signal (INP) is also used. The positioning completed input signal from the Servo Drive is connected to the positioning completed input of the PCU's external I/O connector.

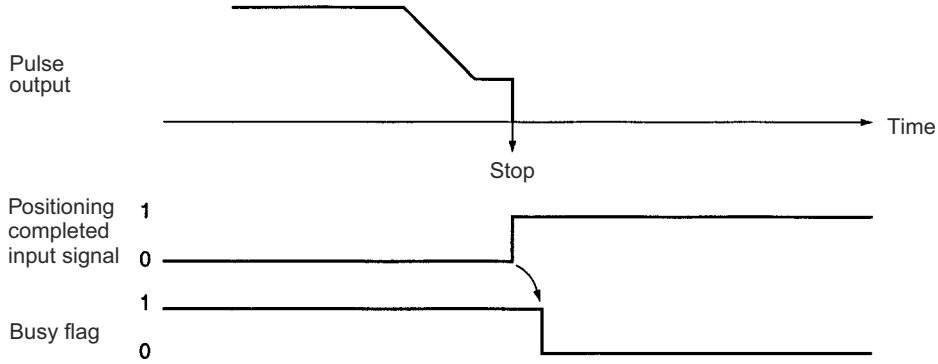

Mode 3

Use this mode for a Servo Drive with an origin adjustment function. It also uses the Servo Drive's positioning completed input signal (INP) as the origin search completed signal. Do not use a Z-phase, or error counter reset signal.

Origin Detection Method: 0

Deceleration starts on the rising edge of the origin proximity input signal and the origin adjustment command is output on the falling edge. Positioning stops on the rising edge of the positioning completed input signal from the Servo Drive.

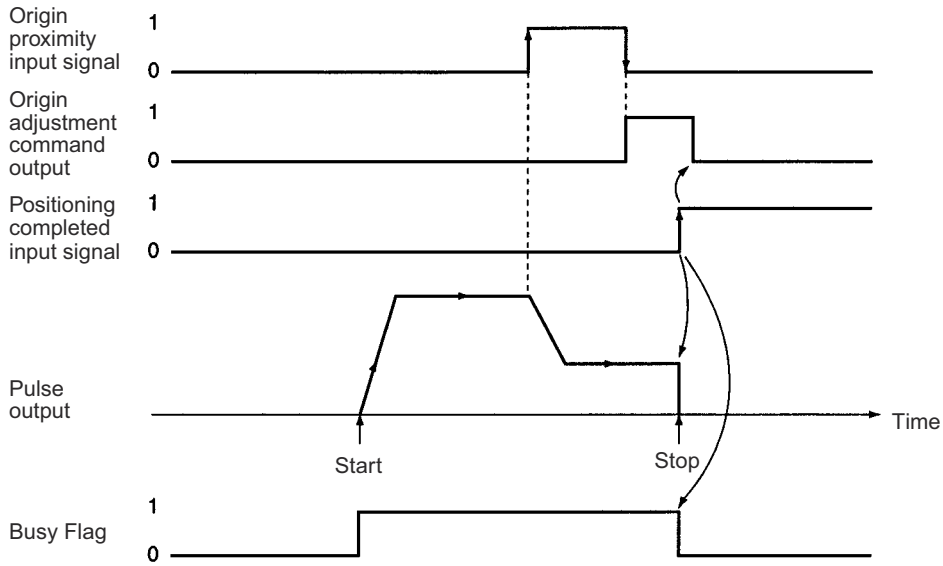

Note When the origin search is completed in Mode 2 or Mode 3, the Servo Drive's positioning completed input signal is used. The positioning completed input signal waits for the positioning monitor time (axis parameter). If the monitor time is set to "0," the signal waits until the positioning completed input signal turns ON. Therefore, if a problem exists in the positioning completed input signal wiring or if the servo gain is set to a large value, the busy state continues without completing the positioning.

When the origin adjustment command (H-RET) is received by the Servo Drive, the internal error counter is reset by the Z-phase of the encoder and positioning stops.

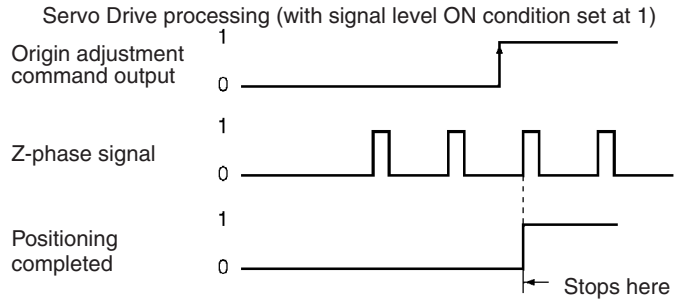

The stop position is the same in Mode 1 and Mode 2. For an operation where the start location of the origin search is different or where the deceleration time is short, refer to the previously-described *Mode 1*. In Mode 3, if deceleration is not completed when the origin proximity input signal is turned ON and then turned OFF, an origin adjustment signal will be output after deceleration is completed.

Origin Detection Method: 1

Deceleration starts on the rising edge of the origin proximity input signal, and an origin adjustment command is output when deceleration is completed.

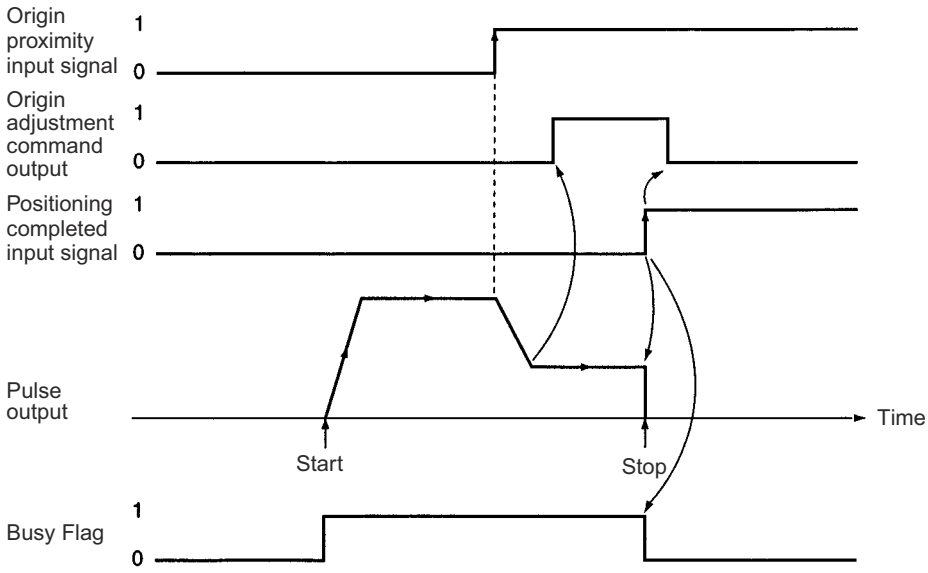

If there is a Z-phase signal during deceleration, the stop position will vary according to the deceleration time.

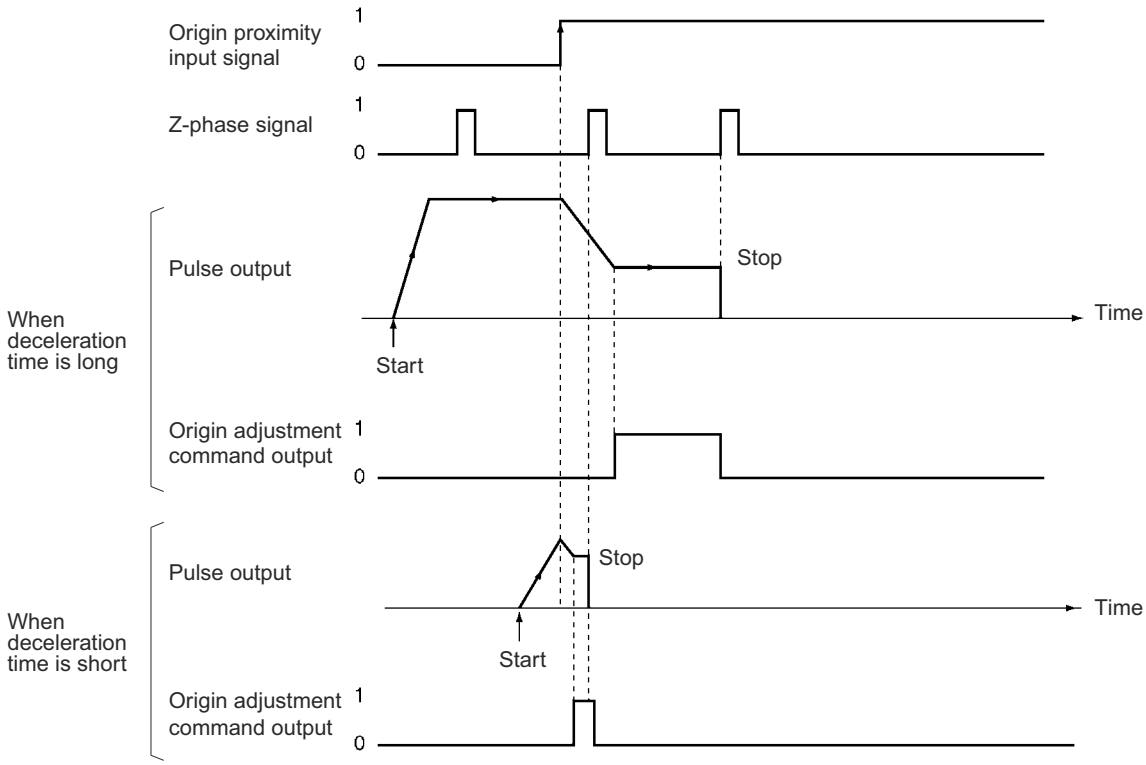

Origin Detection Method: 3

Deceleration starts on the rising edge of the limit input signal. After the signal turns OFF, an origin adjustment command output turns ON. If the deceleration is insufficient while the limit input signal is ON, there will be an error.

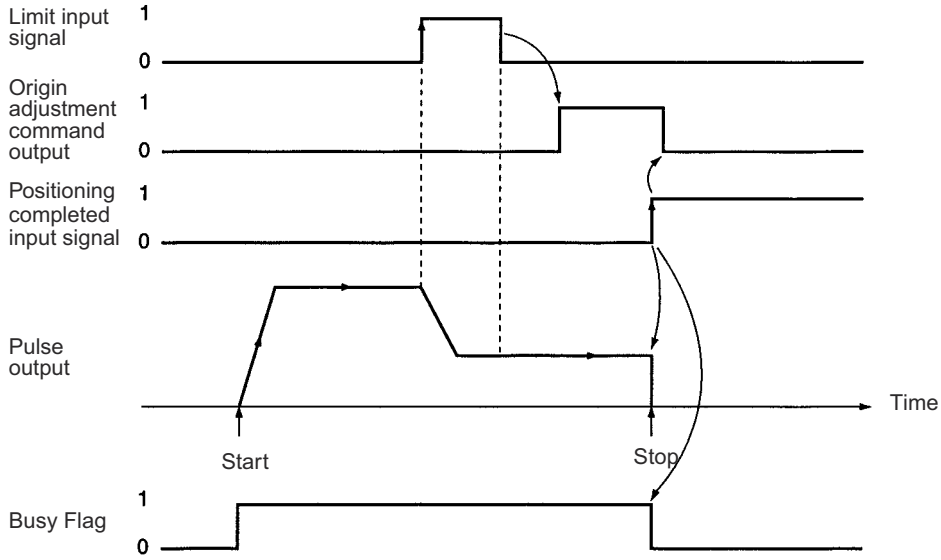

6-4-4 Origin Search Operation and Origin Detection Direction Settings

This section provides information about how operation patterns vary according to origin detection methods and the settings in the origin search operation. For the purposes of this explanation, the origin search is conducted in the CW direction. If origin search is conducted in the CCW direction, the search direction and limit input directions will be reversed.

Origin detection method	Origin search operation 0: Reverse mode 1
0: Takes origin signal after origin proximity signal turns ON (↑) and OFF (↓).	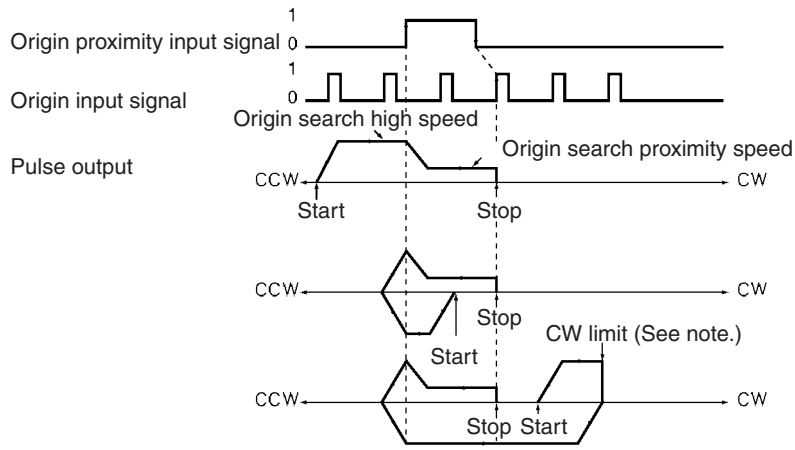 **Note** If a reversal is initiated by a limit signal, a stop without deceleration will occur, and acceleration will occur after reversing.
1: Takes origin signal after origin proximity signal turns ON (↑).	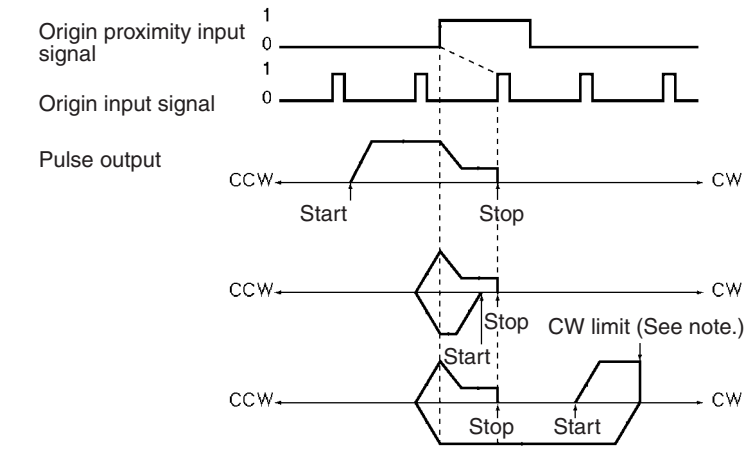 **Note** If a reversal is initiated by a limit signal, a stop without deceleration will occur, and acceleration will occur after reversing.

Origin detection method	Origin search operation 0: Reverse mode 1
2: Origin proximity input signal not used	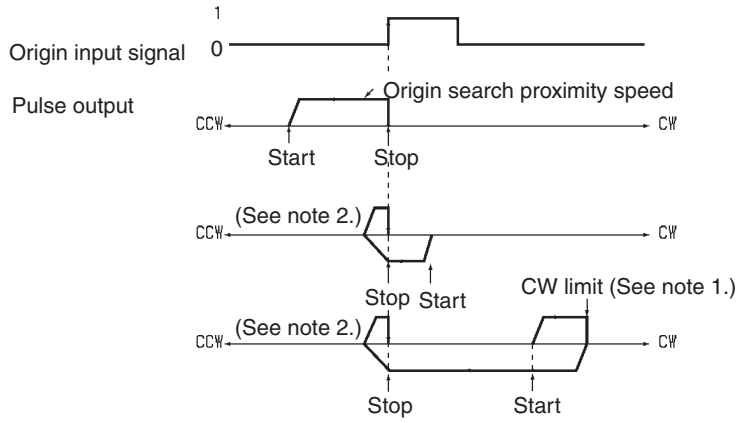 **Note 1:** If the direction of operation is reversed, the reverse will be sudden, without deceleration or acceleration. **Note 2:** If the origin input signal changes from 0 to 1 within about 8ms after reversing at the origin input signal, the rising edge may not be caught. Set the "Origin Search Proximity Speed > Initial Speed" and set the Origin Search Deceleration Time and the Origin Search Acceleration Time to a large value so that the rising edge of the origin input signal is delayed.
3: Limit input signal used instead of origin proximity input signal	An origin detection method error (error code 1607) is generated and settings are not possible.

Origin detection method	Origin search operation 1: Reverse mode 2
0: Takes origin signal after origin proximity signal turns ON (↑) and OFF (↓).	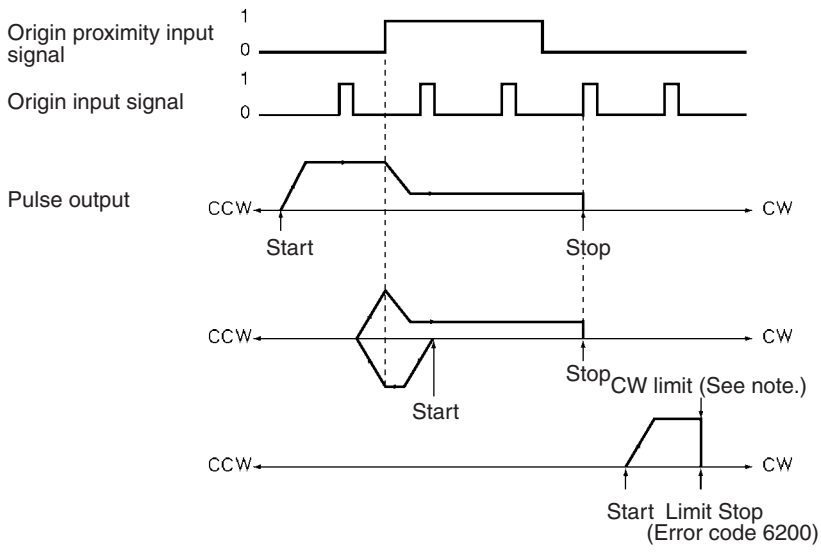 **Note** A limit signal is input and operation is stopped without deceleration.

Origin detection method	Origin search operation 1: Reverse mode 2
1: Takes origin signal after origin proximity signal turns ON (↑).	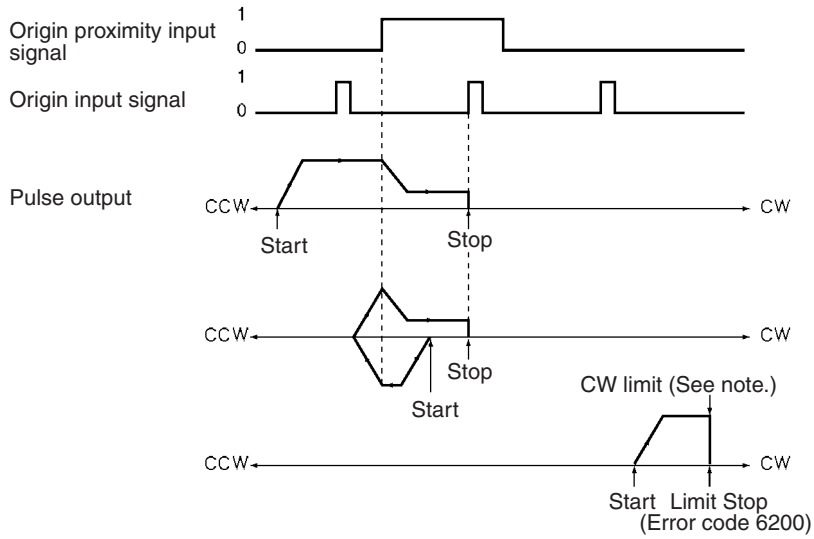 **Note** A limit signal is input and operation is stopped without deceleration.
2: Origin proximity input signal not used	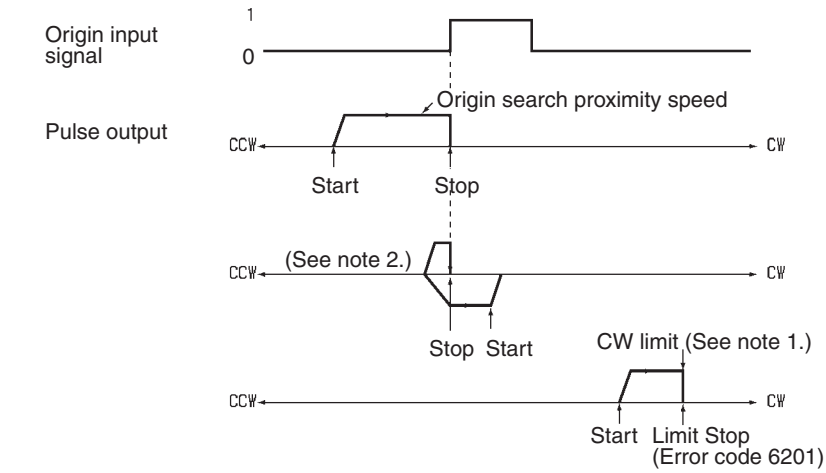 **Note 1:** A limit signal is input and a stop without deceleration will occur as a result. **Note 2:** If the origin input signal changes from 0 to 1 within about 8ms after reversing at the origin input signal, the rising edge may not be caught. Set the "Origin Search Proximity Speed > Initial Speed" and set the Origin Search Deceleration Time and the Origin Search Acceleration Time to a large value so that the rising edge of the origin input signal is delayed.
3: Limit input signal used instead of origin proximity input signal	An origin detection method error (error code 1607) is generated and settings are not possible.

Origin detection method	Origin search operation 2: Single-direction mode
0: Takes origin signal after origin proximity signal turns ON (↑) and OFF (↓).	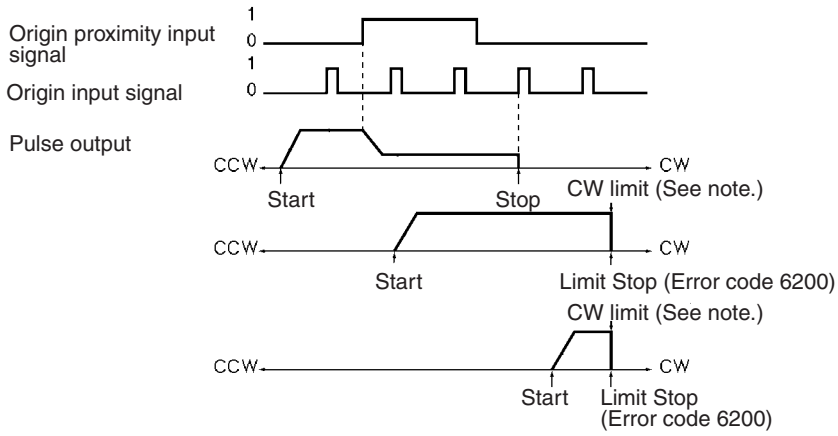 **Note** A limit signal is input and operation is stopped without deceleration.
1: Takes origin signal after origin proximity signal turns ON (↑).	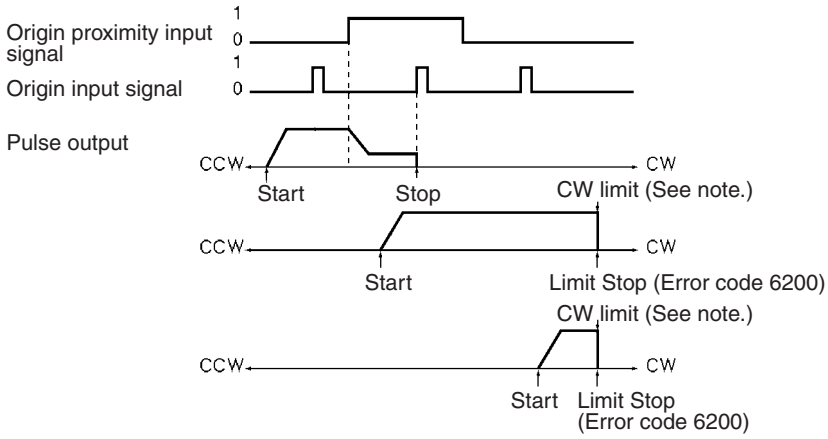 **Note** A limit signal is input and operation is stopped without deceleration.
2: Origin proximity input signal not used	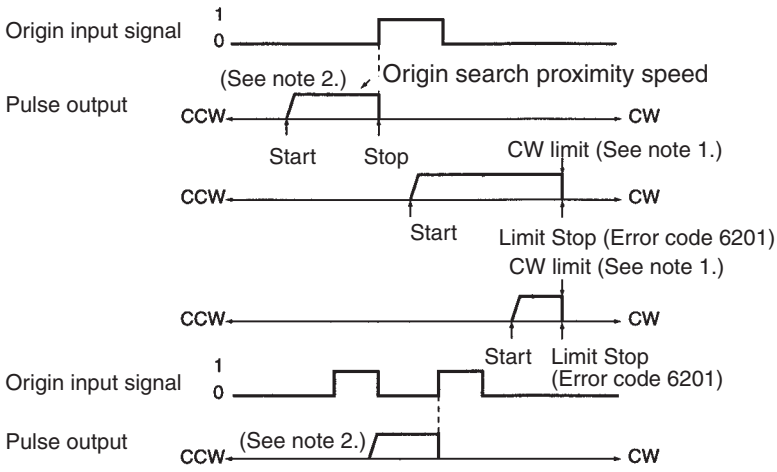 **Note 1:** A limit signal is input and operation is stopped without deceleration. **Note 2:** If the origin input signal changes from 0 to 1 within about 8ms after the pulse output starts, the rising edge may not be caught.

Origin detection method	Origin search operation 2: Single-direction mode
3: Limit input signal used instead of origin proximity input signal	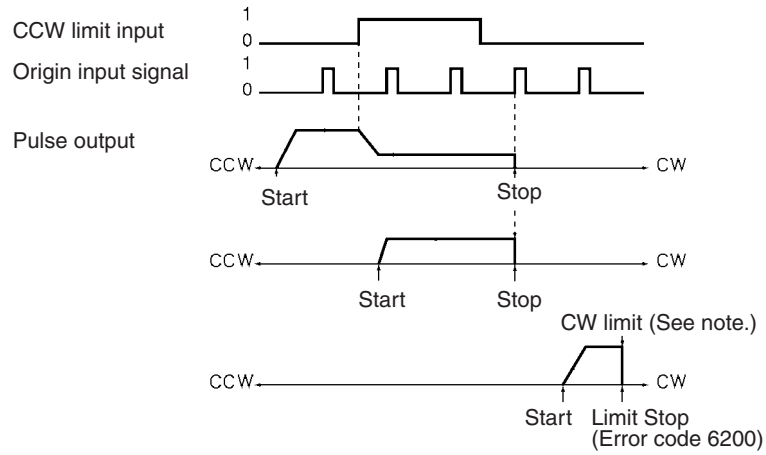 **Note** A limit signal is input and operation is stopped without deceleration.

Origin detection method	Origin search operation 3: Reverse mode 3
0: Takes origin signal after origin proximity signal turns ON (↑) and OFF (↓).	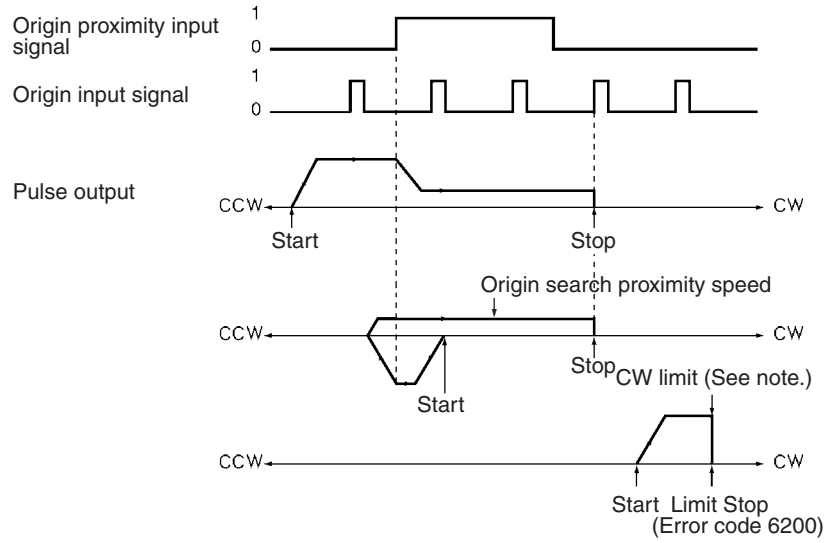 **Note** A limit signal is input and operation is stopped without deceleration.
1: Takes origin signal after origin proximity signal turns ON (↑).	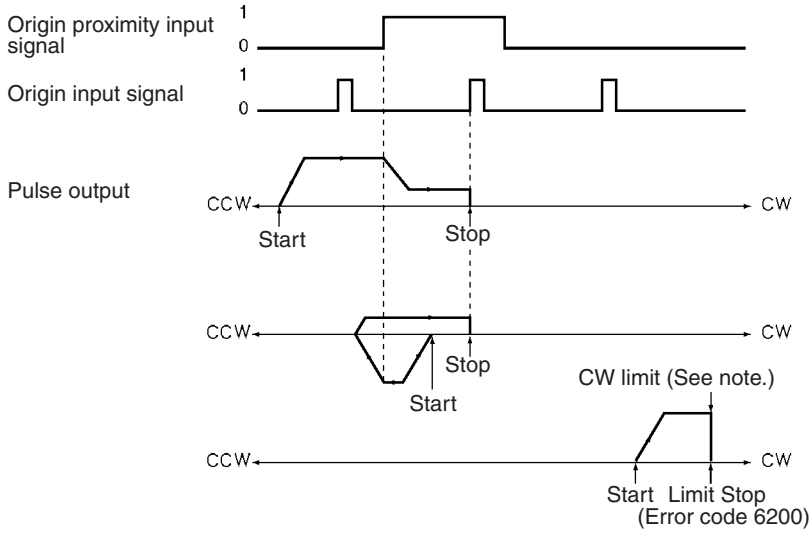 **Note** A limit signal is input and operation is stopped without deceleration.

6-4-5 Operation Pattern With Origin Compensation

An origin compensation value can be set so that the axis is moved by that amount after the origin input signal is detected. That origin compensation movement will be executed at the origin search proximity speed.

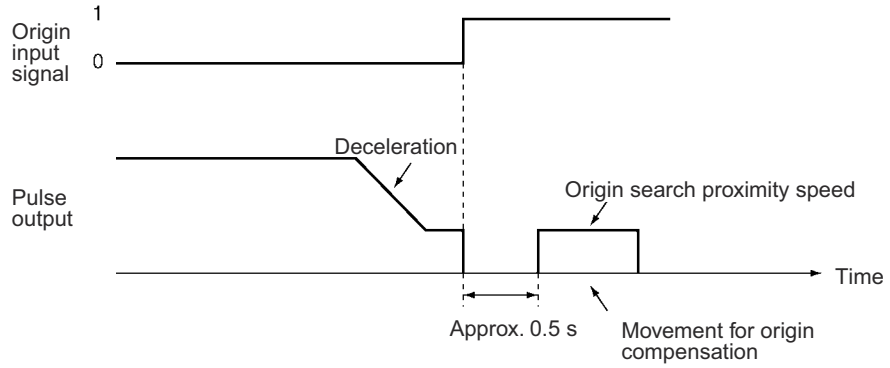

Note If the speed at the time of the compensation is below the initial speed, there will be no acceleration or deceleration for the compensation pulse output. If that speed is at least equal to the initial speed, there will be acceleration and deceleration.

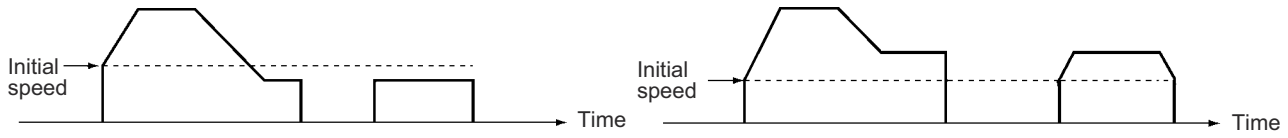

The override is not enabled with respect to pulse output during origin search, but it is enabled with respect to the amount of pulse output set for origin compensation.

In this case, the origin search proximity speed corresponds to an override setting of 100%. Therefore, if the override is set to 200%, pulse output for the origin compensation value is made at twice the speed of the origin search proximity speed, as shown below.

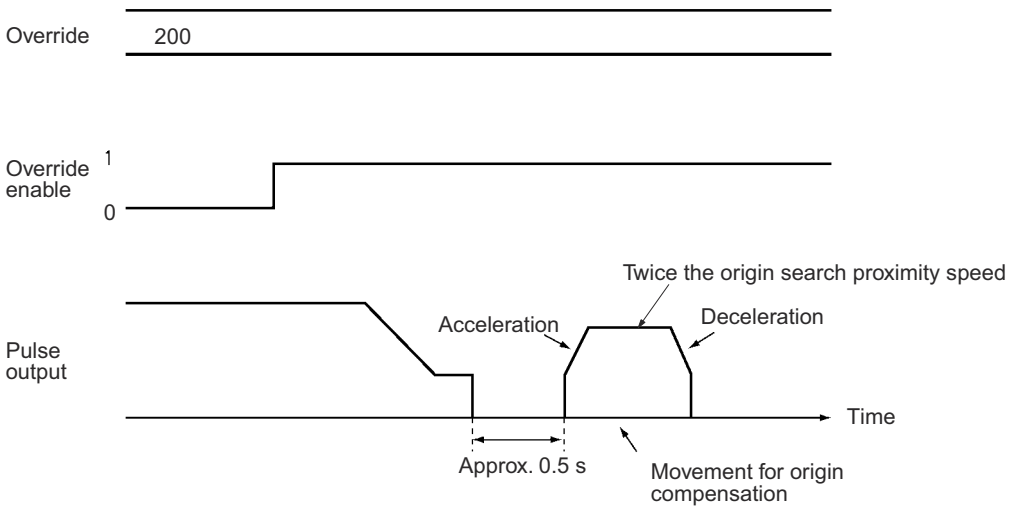

Note If the speed during movement for compensation is greater than the initial speed as a result of the override, there will be acceleration and deceleration with respect to the pulse output.

6-5 Origin Search Timing Charts

6-5-1 Without Origin Compensation

When Using an Origin Proximity Input Signal

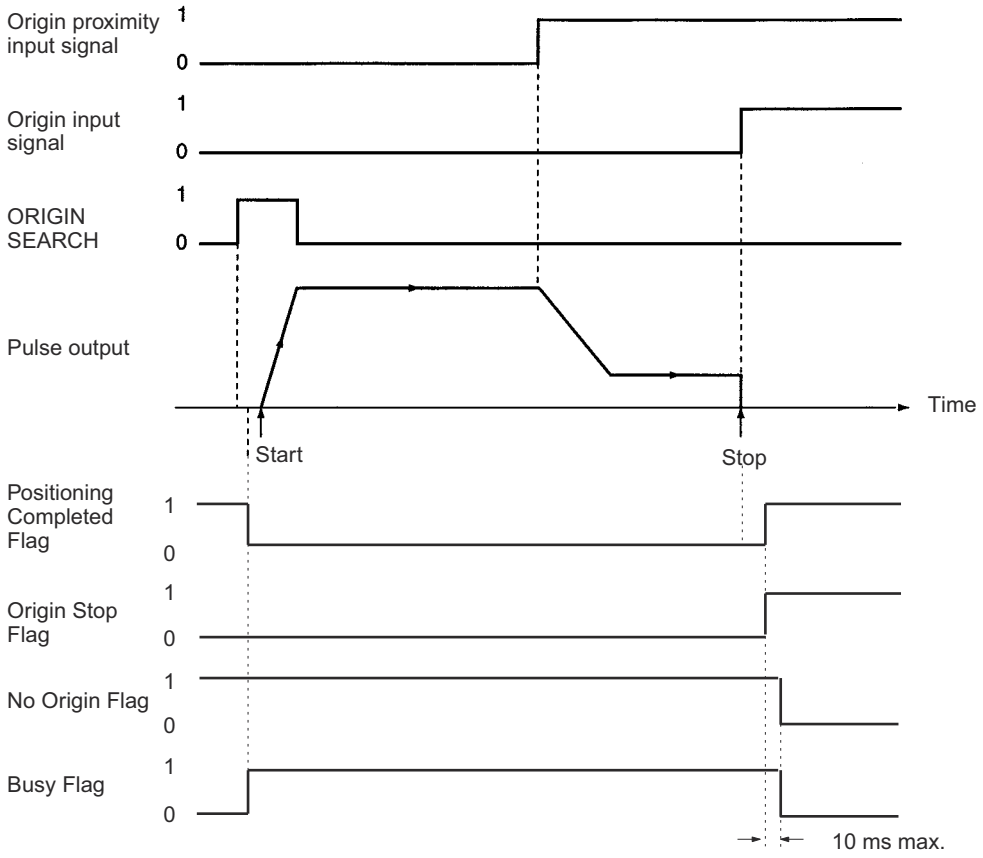

When Not Using an Origin Proximity Input Signal

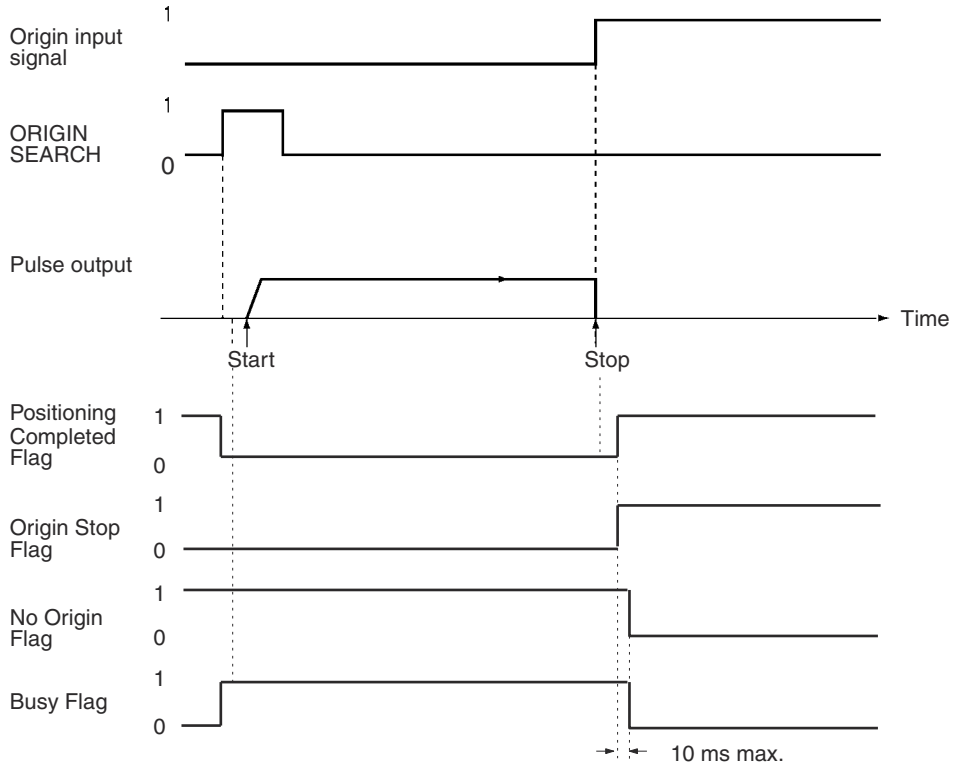

6-5-2 With Origin Compensation

When Using an Origin Proximity Input Signal

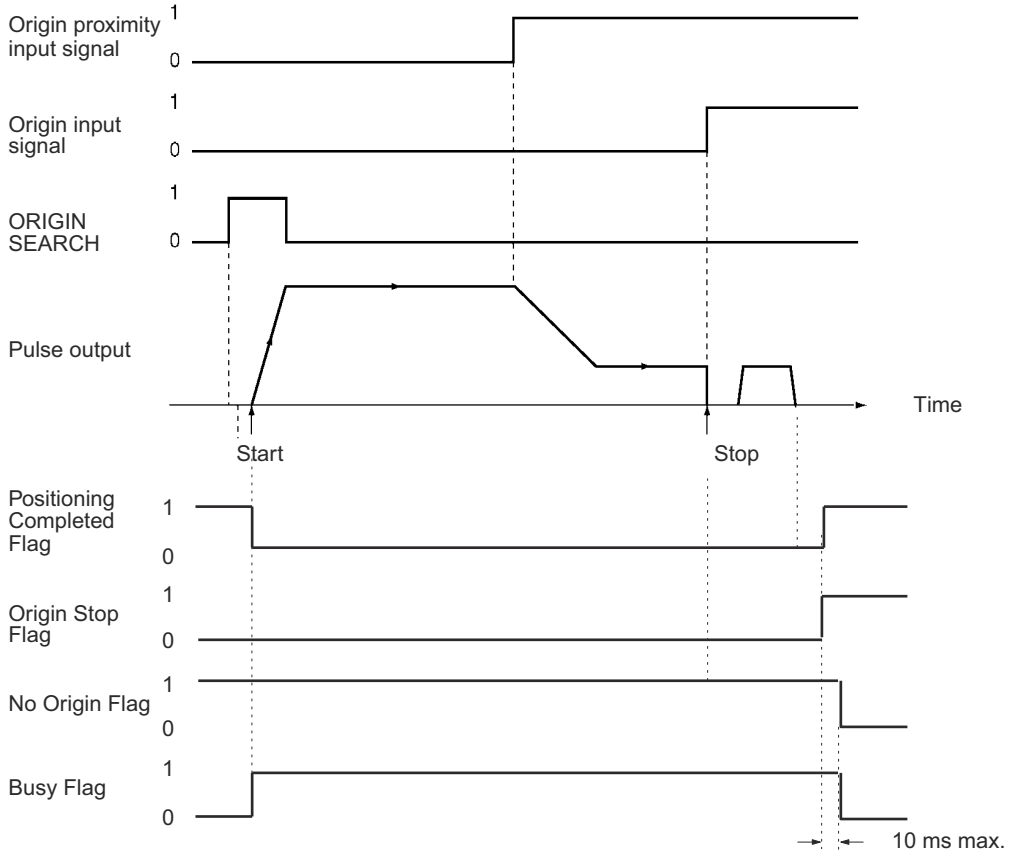

When Not Using an Origin Proximity Input Signal

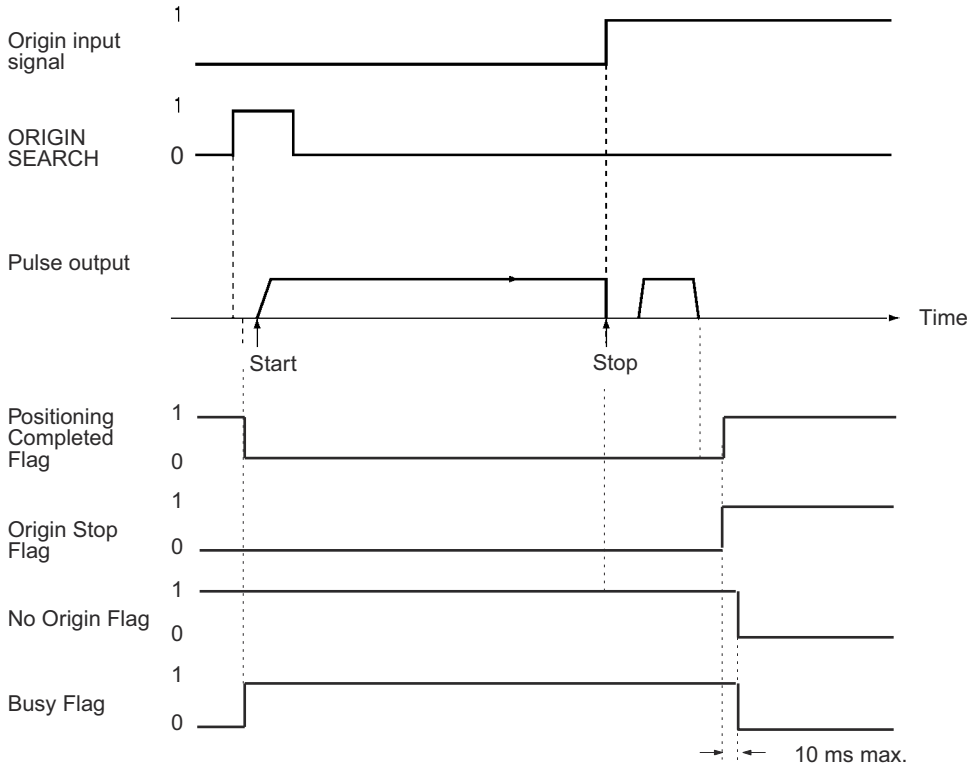

6-5-3 Origin Search Deceleration Stop

When a deceleration stop is executed during an origin search, the origin search is canceled. The following diagram shows an example of a deceleration stop during an origin search when there is an origin proximity input signal reversal.

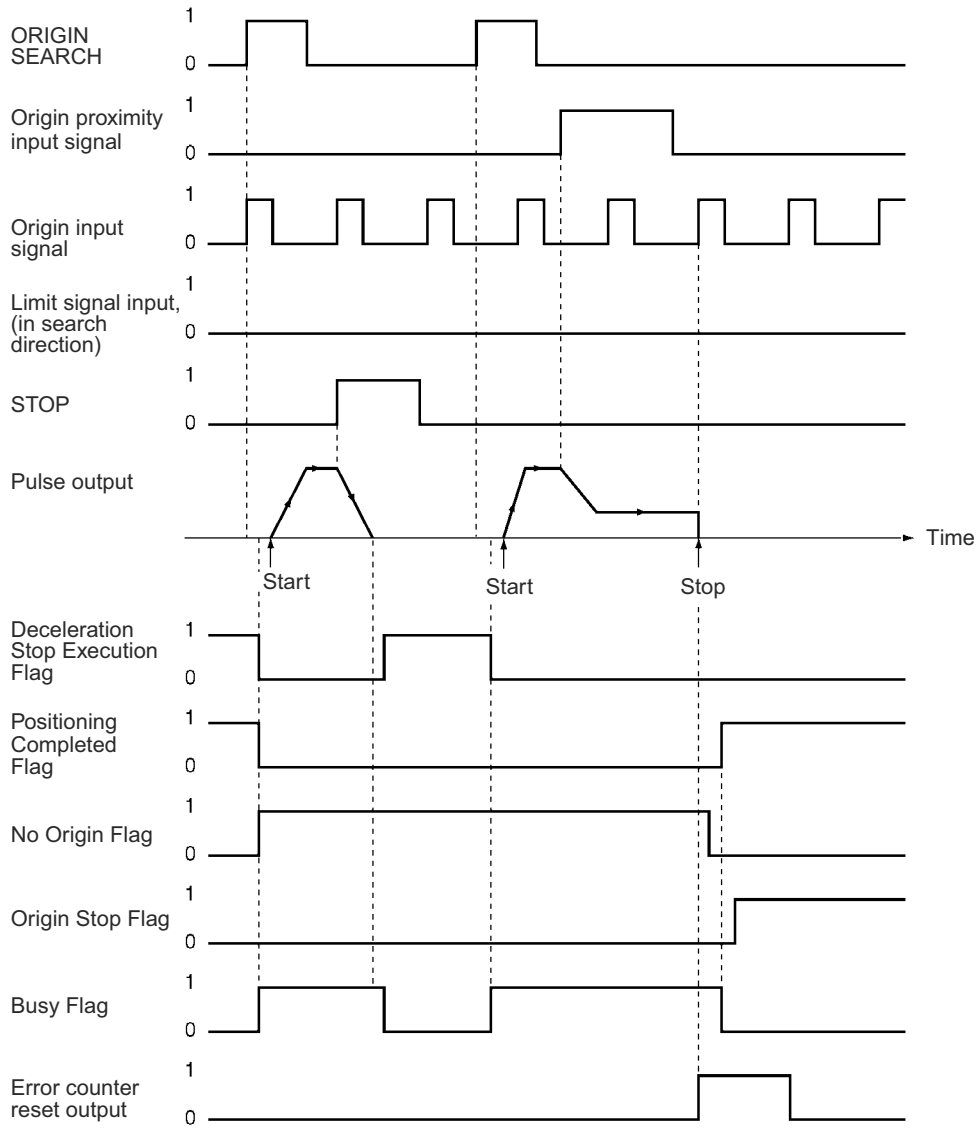

6-5-4 Emergency Stop of Origin Search

The origin search will be interrupted if the emergency stop input signal is input while the origin search is being executed. To execute the origin search again, first release the pulse output prohibition.

The following diagram shows an example of an emergency stop during an origin search when there is an origin proximity input signal reversal.

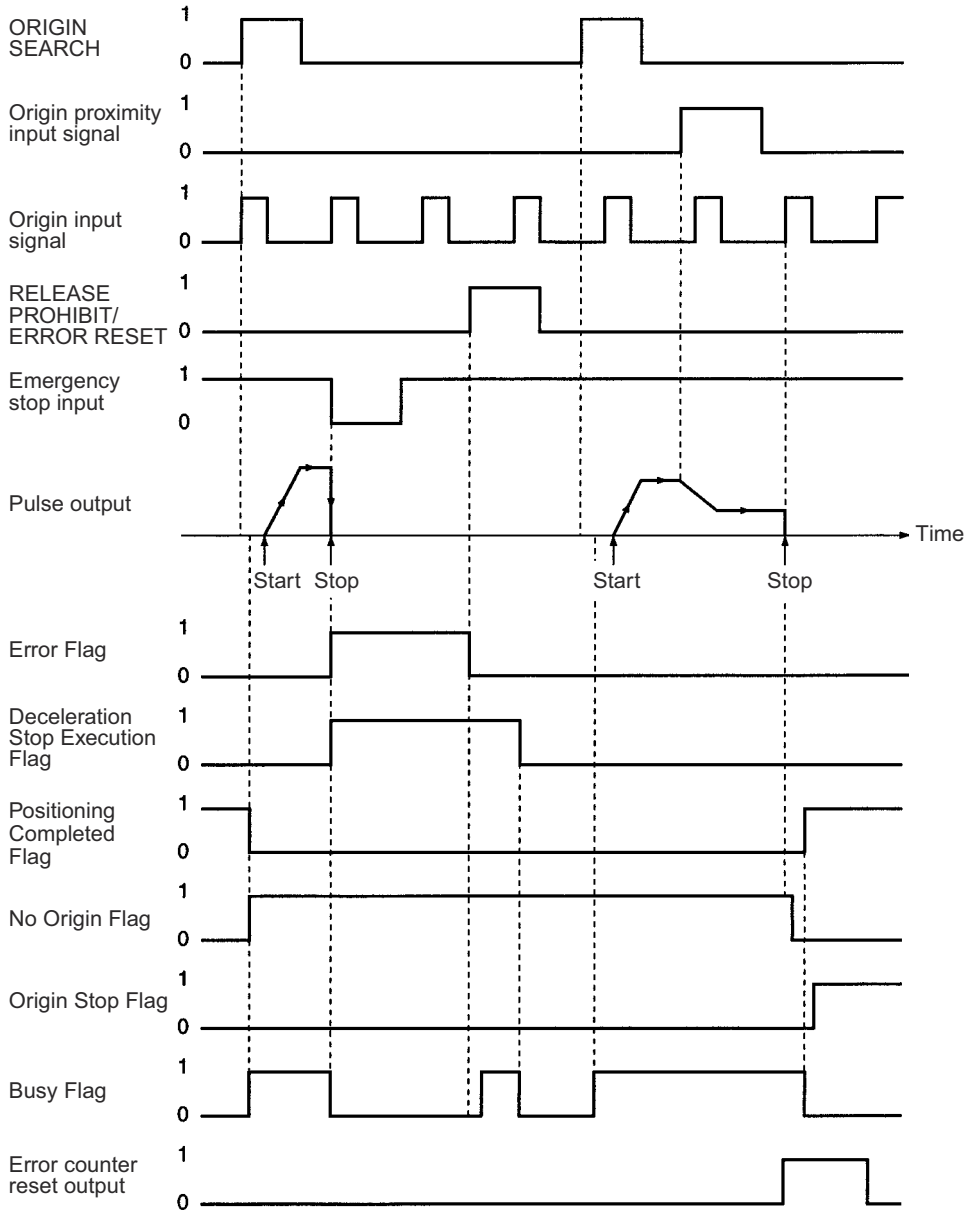

6-6 Present Position Preset

PRESENT POSITION PRESET changes the present position to any value.

6-6-1 Outline of Operation

When the PRESENT POSITION PRESET Bit is turned ON, the present position is changed to the value set in the operating data area. During present position preset, the Busy Flag will be ON (1 cycle min.). The Busy Flag turns OFF to indicate that preset operation has been completed. After this, the origin is established. If the present position is changed to “0,” then that position will become the origin.

6-6-2 Beginning Words of Operating Memory Area, Operating Data Area, and Parameter Areas

The beginning words of the operating memory area, operating data area, and common parameter area used for a Position Control Unit (PCU) are determined (or set) according to the following.

- Beginning word of the operating memory area, n = CIO 2000 + 10 × unit number
- Beginning word of the common parameter area, m = D20000 + 100 × unit number
- Beginning word of the operating data area, l, is specified in m and m+1.

Set the beginning words of the operating data area and designate the axis parameters used with the common parameters as shown below.

Word	Name	Bit	Reference
m	Operating data area designation	00 to 15	*SECTION 4*
m+1	Beginning word of operating data area	00 to 15	
m+2	Axis parameter designation	00 to 15	

6-6-3 Operating Memory Area Allocation and Operating Data Area Settings

Operating Memory Area

Name	Model	Operating memory area				Bit	Details
		X axis	Y axis	Z axis	U axis		
PRESENT POSITION PRESET	NC4□3 NC2□3 NC1□3	n n n	n+2 n+2	n+4	n+6	08	↑ : Start present position preset
No Origin Flag	NC4□3 NC2□3 NC1□3	n+8 n+4 n+2	n+11 n+7	n+14	n+17	06	1: No origin 0: Origin established
Busy Flag						13	1: Busy

Operating Data Area

Name	Model	Operating data area				Bit	Details
		X axis	Y axis	Z axis	U axis		
Position	NC4□3	I+8 I+9	I+20 I+21	I+32 I+33	I+44 I+45	00 to 15 (rightmost) 00 to 15 (leftmost)	15 Leftmost 00 15 Rightmost 00 Setting range: C0000001 to 3FFFFFFF Hex (–1,073,741,823 to 1,073,741,823)
	NC2□3	I+8 I+9	I+20 I+21				
	NC1□3	I+8 I+9					

6-6-4 Timing Chart

In the following timing chart, the X-axis present position for a 4-axis PCU is changed to “0.” When the present position is changed to “0” it becomes the origin, so the Origin Stop Flag is turned ON. There will be no change in the status of the Positioning Completed Flag.

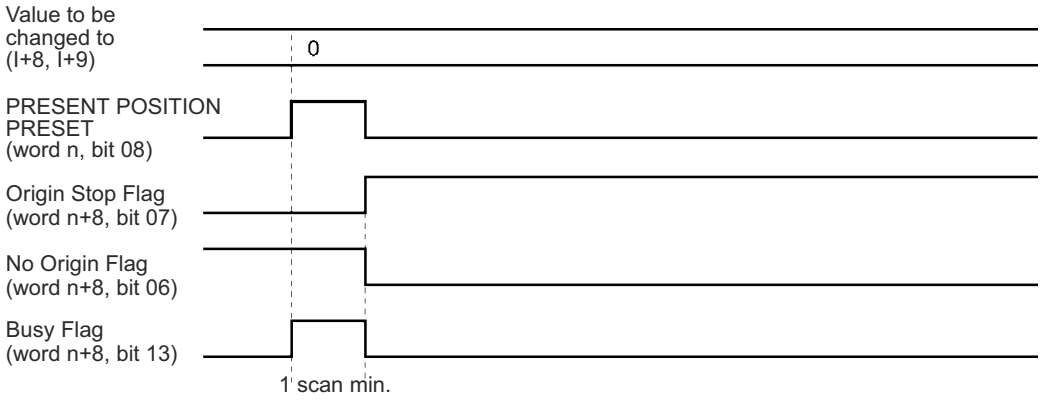

6-7 Origin Return

The origin return operation is used to return the axis to the origin from any position. It is executed by the rising edge of the ORIGIN RETURN command.

Note Execute ORIGIN RETURN when the origin has been established. If the origin has not been established, a present position unknown error (error code 5040) will be generated.

6-7-1 Allocation of Operating Memory Area and Setting of Operating Data Area

Operating Memory Area

Name	Model	Operating memory area				Bit	Details
		X axis	Y axis	Z axis	U axis		
ORIGIN RETURN	NC4□3	n	n+2	n+4	n+6	07	↑ : Start of origin return
	NC2□3	n	n+2				
	NC1□3	n					
Origin Stop Flag	NC4□3	n+8	n+11	n+14	n+17	07	1: Stopping at origin; 0: Other
	NC2□3	n+4	n+7				
Busy Flag	NC1□3	n+2				13	1: Busy

Operating Data Area

Name	Model	Operating memory area				Bit	Details
		X axis	Y axis	Z axis	U axis		
Speed	NC4□3 NC2□3 NC1□3	I+10 I+11 I+10 I+11 I+10 I+11	I+22 I+23 I+22 I+23	I+34 I+35	I+46 I+47	00 to 15 (rightmost) 00 to 15 (leftmost)	15 Leftmost 00 15 Rightmost 00 Setting range: 1 to 7A120 Hex (1 to 500,000 pps)
Deceleration time	NC4□3 NC2□3 NC1□3	I+12 I+13 I+12 I+13 I+12 I+13	I+24 I+25 I+24 I+25	I+36 I+37	I+48 I+49	00 to 15 (rightmost) 00 to 15 (leftmost)	15 Leftmost 00 15 Rightmost 00 Setting range: 0 to 3D090 Hex (0 to 250,000 ms)
Deceleration time	NC4□3 NC2□3 NC1□3	I+14 I+15 I+14 I+15 I+14 I+15	I+26 I+27 I+26 I+27	I+38 I+39	I+50 I+51	00 to 15 (rightmost) 00 to 15 (leftmost)	

The origin return will not operate if the software limit function has been disabled by setting the axis parameters so that the CW software limit is less than or equal to the CCW software limit. (At the time of the command, the present position is “0.”)

6-7-2 Timing Chart

A timing chart for executing an origin return on the X axis looks like this:

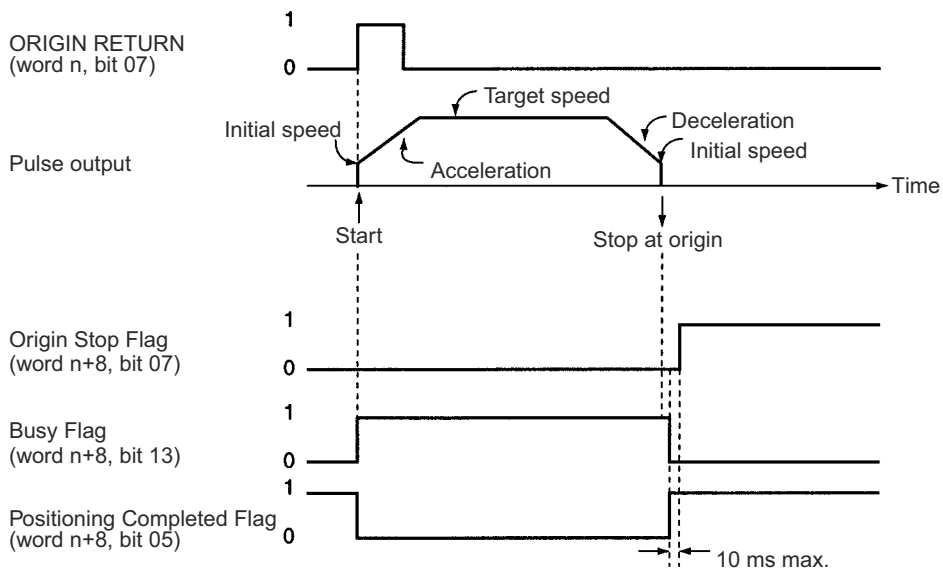

Note The Origin Stop Flag turns ON when all of the following conditions are satisfied.

- When an origin is established (the No Origin Flag is OFF).
- When pulse output has stopped (Busy Flag is OFF).
- When the present position is 0.

Therefore, the Origin Stop Flag will not turn ON when the present position passes through 0, such as occurs when positioning from –100 pulses to 100 pulses.

6-8 Z-phase Margin

6-8-1 Description

Although there will be some variations for different settings, the PCU origin search basically works by stopping pulse output with the first encoder Z-phase after confirming ON/OFF for the origin proximity signal, outputting error counter reset, and determining that position as the origin.

In cases where the time (distance) from when the origin proximity signal changes from OFF to ON until the first Z-phase is detected is extremely short or is almost the same as the time taken for one rotation, the position at which the Z-phase is detected may be displaced by one phase due to discrepancies in the ON response of the origin proximity sensor or the Servo Drive speed.

This displacement is avoided by confirming the "Z-phase margin." The Z-phase margin indicates in pulses the amount by which the motor rotated during the time from when the origin proximity signal changed from ON to OFF until the Z-phase was detected. If this value is close to 0 or close to one motor rotation, there is a possibility of origin displacement during origin search. A simple way of reducing the probability of this is to adjust the motor's mounting angle and the origin proximity sensor's mounting position so that this value is approximately half a rotation.

Origin Search Operation

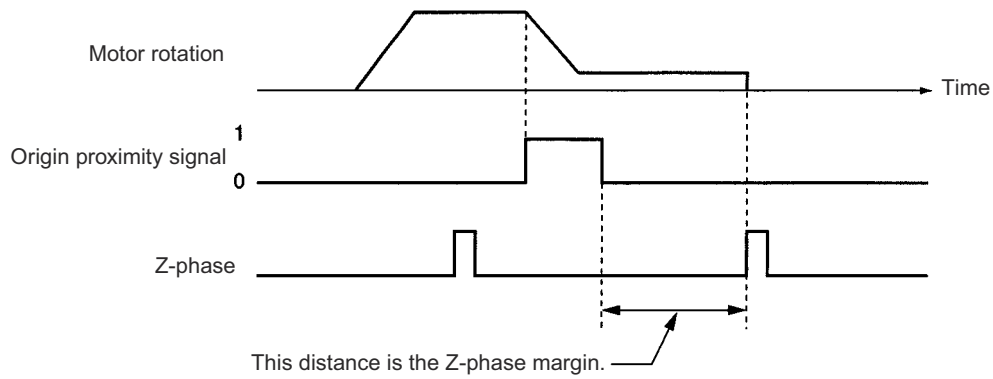

6-8-2 Calculating the Z-phase Margin (Example)

One way of obtaining the Z-phase margin is to, after origin search, perform jogging in the opposite direction to origin search, stop operation at the point where the origin proximity signal changes from OFF to ON, and read the value of the present position at that point. The value of this present position will be equal to the Z-phase margin. If the speed at the point where the origin proximity signal changes from OFF to ON is fast, there will be some inaccuracy in the value read for the Z-phase margin. Try to reduce the speed of the jog feeding in the neighborhood of the point where the origin proximity signal changes from OFF to ON. By adjusting mounting positions and angles so that this position corresponds to approximately half the distance moved for one rotation of the motor.

Calculation of Z-phase Margin

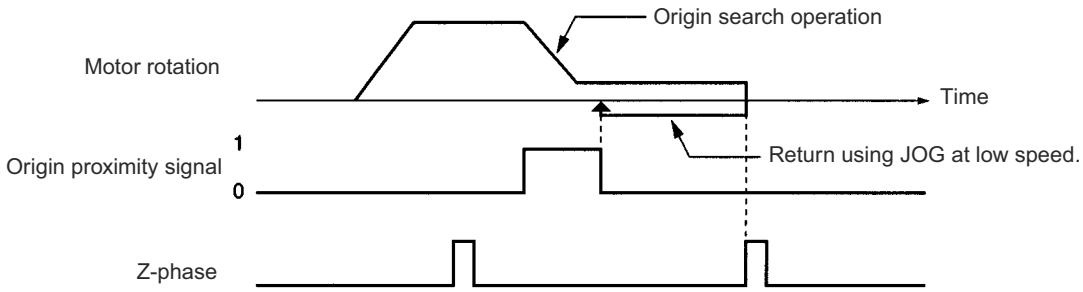

SECTION 7
Direct Operation

This section provides an overview of direct operation, describes the parameter and data settings required to perform direct operation, and gives sample programs.

7-1 Outline 178
7-2 Direct Operation Procedure 179
7-3 Setting Data for Direct Operation 179
7-3-1 Beginning Words of Operating Memory Area, Operating Data Area, and Parameter Areas 179
7-3-2 Axis Parameter Area 180
7-3-3 Operating Memory Area 180
7-3-4 Operating Data Area 180
7-4 Operations With Direct Operation 181
7-4-1 Starting Direct Operation 181
7-4-2 Direct Operation and the Operating Data Area 181
7-4-3 Multiple Starts With Direct Operation 181
7-4-4 Multiple Start Operating Patterns 182
7-4-5 Starting Direct Operation During Memory Operation 184
7-5 Direct Operation Timing Charts 184
7-6 Acceleration/Deceleration 186
7-6-1 Calculation of Basic Acceleration/Deceleration Times 186
7-6-2 Calculation of Acceleration/Deceleration Times for Continuous Positioning 187
7-6-3 Calculation of Acceleration/Deceleration Times when the Speed is Changed During Operation 188
7-7 Sample Program 189
7-7-1 Details of Operation 189
7-7-2 Setting Conditions and Details 190
7-7-3 Sample Program 190
7-7-4 Program Using Function Blocks 192

7-1 Outline

Position control is carried out by setting positions, speeds, and acceleration/deceleration times each time in the operating data area specified by the common parameters.

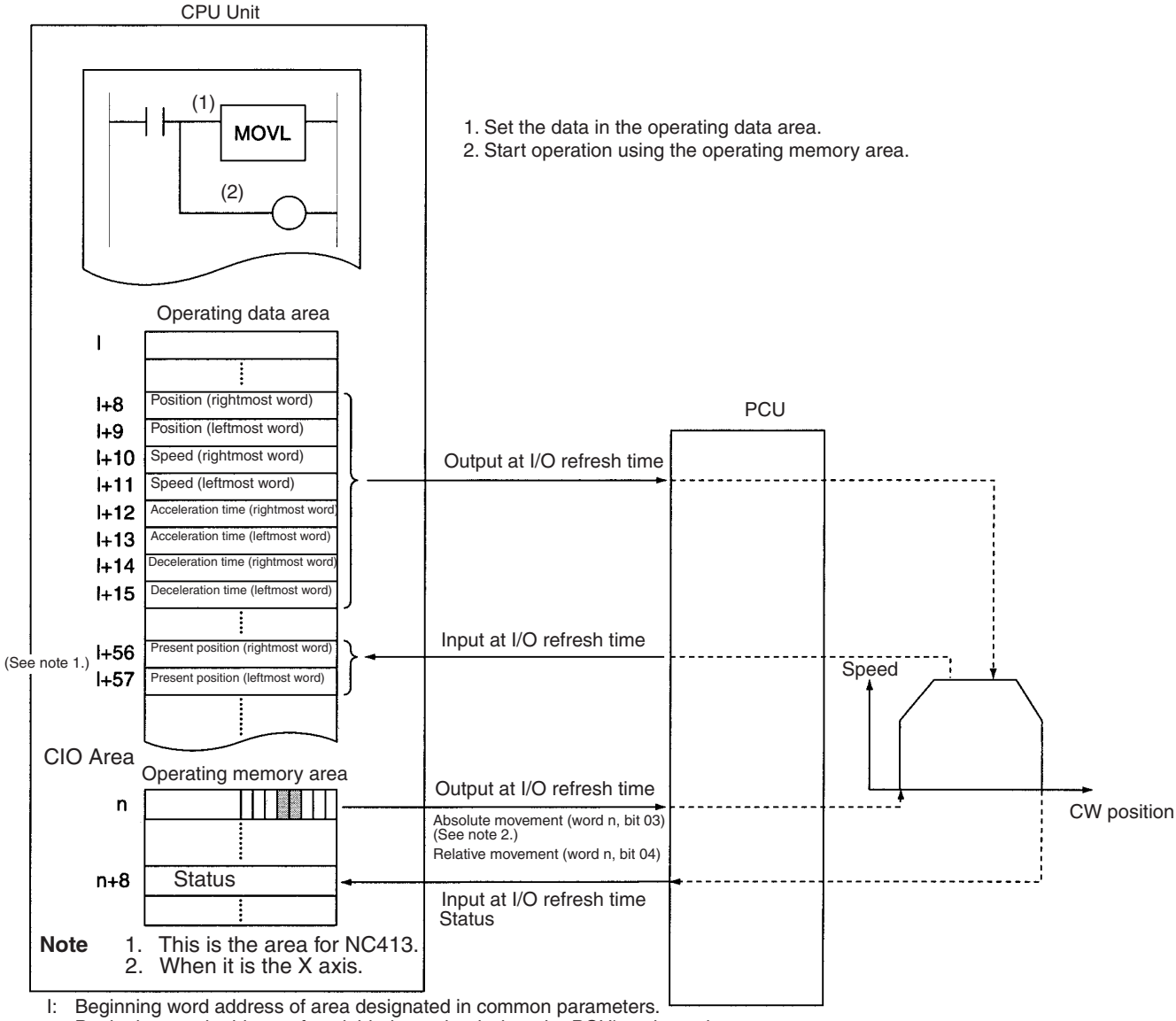

I: Beginning word address of area designated in common parameters.
n: Beginning word address of work bit determined when the PCU's unit number was set.

The positions and speeds set in the operating data area by the MOVL instruction are output to the Position Control Unit (PCU) automatically at I/O refresh time. Data transfer is not required.

Start is executed by the ABSOLUTE MOVEMENT command (for the X axis: word n, bit 03) allocated to the operating memory area (in the CIO Area) or when the RELATIVE MOVEMENT command (for the X axis: word n, bit 04) is turned ON.

- The ABSOLUTE MOVEMENT command determines the position from the absolute position in relation to the origin. With the ABSOLUTE MOVEMENT command, a present position unknown error (error code 5040) will be generated if the origin has not been established.
- With the RELATIVE MOVEMENT command, position control is based on the amount of relative movement from the present position. Relative movement moves the axis by a relative amount from the start position. It can be executed even when the origin has not been established.

- When the software limit function has been disabled by the axis parameters (i.e., CW software limit equal to or less than the CCW software limit) the position will be determined by the amount of relative movement even if an absolute position is specified. (At that time, the present position is set to "0.")

7-2 Direct Operation Procedure

The procedures for setting data for direct operation are explained below using the X axis as an example.

1,2,3...

1. Set the common parameters. (Refer to *4-2 Common Parameter Area*.)
   m: Set the operating data area either to DM or to EM.
   m+1: Set the beginning word of the operating data area (I).
   m+2: Designate the axis parameters.
2. Power up again or restart.
   The data in the common parameter area set in (1) above is enabled.
3. Set the operating data area (Refer to *4-5 Operating Data Area*.)
   Set the position in I+8 and I+9.
   Set the speed in I+10 and I+11.
   Set the acceleration time in I+12 and I+13
   Set the deceleration time in I+14 and I+15
4. Execute absolute movement or relative movement.
   Turn the ABSOLUTE MOVEMENT command bit (word n, bit 03) or the RELATIVE MOVEMENT command bit (word n, bit 04) from OFF to ON.

The operations in (1) and (2) above are required when using a PCU for the first time, or when modifying the data in the common parameter area.

7-3 Setting Data for Direct Operation

A simple explanation of the axis parameter area, operating memory area, and operating data area settings that are used when executing direct operation is given below.

For setting methods and other details, refer to *4-3 Axis Parameter Area*, *4-4 Operating Memory Area*, and *4-5 Operating Data Area*.

7-3-1 Beginning Words of Operating Memory Area, Operating Data Area, and Parameter Areas

The beginning words of the operating memory area, operating data area, and common parameter area used for a Position Control Unit (PCU) are determined (or set) according to the following.

- Beginning word of the operating memory area, n = CIO 2000 + 10 × unit number
- Beginning word of the common parameter area, m = D20000 + 100 × unit number
- Beginning word of the operating data area, l, is specified in m and m+1.

Set the beginning words of the operating data area and designate the axis parameters used with the common parameters as shown below.

Word	Name	Bit	Reference
m	Operating data area designation	00 to 15	*SECTION 4*
m+1	Beginning word of operating data area	00 to 15	
m+2	Axis parameter designation	00 to 15	

7-3-2 Axis Parameter Area

Item	Parameter area for each axis				Bit	Details
	NC113	NC213	NC413			
	X axis	Y axis	Z axis	U axis		
Initial speed	m+8 m+9	m+36 m+37	m+64 m+65	m+92 m+93	00 to 15 (rightmost) 00 to 15 (leftmost)	15 Leftmost 00 15 Rightmost 00 Setting range: 0 to 7A120 Hex (0 to 500,000 pps)

7-3-3 Operating Memory Area

Item	Model	Operating memory area				Bit	Details
		X axis	Y axis	Z axis	U axis		
ABSOLUTE MOVEMENT	NC4□3 NC2□3 NC1□3	n n n	n+2 n+2	n+4	n+6	03	↑ : Absolute movement starts.
RELATIVE MOVEMENT						04	↑ : Relative movement starts.
INTERRUPT FEEDING						05	↑ : Interrupt feeding starts.
Positioning Completed Flag	NC4□3 NC2□3 NC1□3	n+8 n+4 n+2	n+11 n+7	n+14	n+17	05	↑ : Positioning is completed.
Busy Flag						13	1: Busy

7-3-4 Operating Data Area

Item	Model	Operating data area				Bit	Details
		X axis	Y axis	Z axis	U axis		
Position	NC4□3 NC2□3 NC1□3	I+8 I+9 I+8 I+9 I+8 I+9	I+20 I+21 I+20 I+21	I+32 I+33	I+44 I+45	00 to 15 (rightmost) 00 to 15 (leftmost)	15 Leftmost 00 15 Rightmost 00 Setting range: C0000001 to 3FFFFFFF (–1,073,741,823 to1,073,741,823 pulses)
Speed	NC4□3 NC2□3 NC1□3	I+10 I+11 I+10 I+11 I+10 I+11	I+22 I+23 I+22 I+23	I+34 I+35	I+46 I+47	00 to 15 (rightmost) 00 to 15 (leftmost)	15 Leftmost 00 15 Rightmost 00 Setting range: 1 to 7A120 Hex (1 to 500,000 pps)
Acceleration time	NC4□3 NC2□3 NC1□3	I+12 I+13 I+12 I+13 I+12 I+13	I+24 I+25 I+24 I+25	I+36 I+37	I+48 I+49	00 to 15 (rightmost) 00 to 15 (leftmost)	15 Leftmost 00 15 Rightmost 00 Setting range: 0 to 3D090 Hex (0 to 250,000 pps)
Deceleration time	NC4□3 NC2□3 NC1□3	I+14 I+15 I+14 I+15 I+14 I+15	I+26 I+27 I+26 I+27	I+38 I+39	I+50 I+51	00 to 15 (rightmost) 00 to 15 (leftmost)	

7-4 Operations With Direct Operation

7-4-1 Starting Direct Operation

There are two ways of starting direct operation.

1,2,3...

1. Turn the ABSOLUTE MOVEMENT command from OFF to ON (↑)
2. Turn the RELATIVE MOVEMENT command from OFF to ON (↑)

When Executed by ABSOLUTE MOVEMENT Command

Positions to the location arrived at by designating the position for the operating data area as absolute.

When Executed by RELATIVE MOVEMENT Command

Positions to the location arrived at by designating the position for the operating data area as relative.

Interrupt feeding and jogging (speed feeding) are available to start direct operation. See *9-1 Jogging* and *9-3 Interrupt Feeding* for details about these operations and how to use them.

7-4-2 Direct Operation and the Operating Data Area

Positioning operations using direct operation are determined by data set in the operating data area.

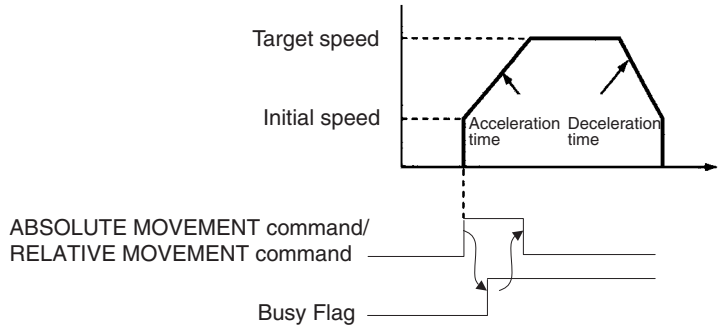

Note Keep the ABSOLUTE MOVEMENT command or RELATIVE MOVEMENT command ON until the Busy Flag for the designated axis turns ON.

7-4-3 Multiple Starts With Direct Operation

During direct operation, relative or absolute movements can be carried out by setting new positions, speeds, acceleration, and deceleration in the operating data area. In this event, the positioning currently being executed is cancelled and the axis is moved towards the newly designated position.

The Busy Flag does not need to be checked when a multiple start is used. Also, depending on the conditions or timing, a multiple start may not be valid. Refer to Multiple Start Operating Patterns, below, for details.

Note If data in the operating data area is changed during direct operation, position data will become effective when the next direct operation is designated. Speed data goes into effect as soon as it is written to the operating data area, unrelated to any other commands.
The value specified at the first startup can be used for acceleration/deceleration data.

With Ver. 2.0 or later, the value specified for each multiple start is used for acceleration. The value set for the first start is used for deceleration.

7-4-4 Multiple Start Operating Patterns

Operation Patterns for Absolute Movement

When a reversal is specified by the ABSOLUTE MOVEMENT command, positioning will first decelerate at the deceleration time that has been set and then accelerate in the reverse direction at the acceleration time that has been set. Multiple reversals may not be possible if they are generated while a reversal operation is already being performed.

Without Reversal

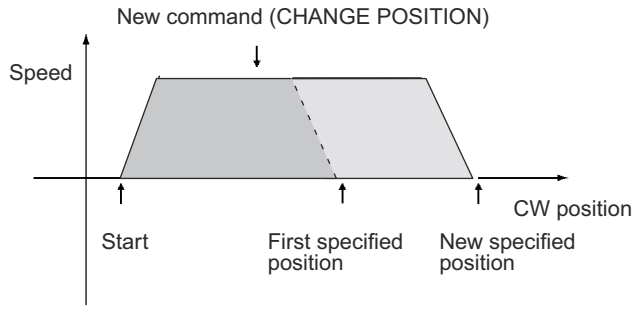

With Reversal

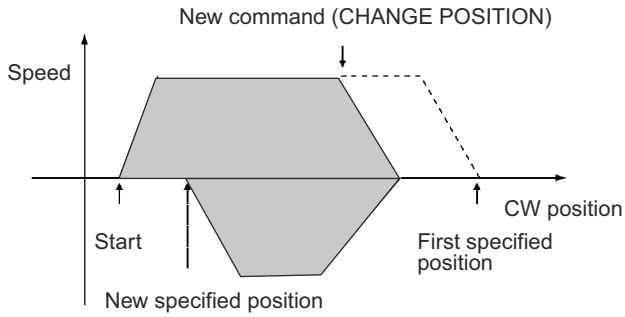

Operation Patterns for Relative Movement

If the value of the RELATIVE MOVEMENT command causes a reverse, an emergency reverse will occur when the command is received.

Without Reversal

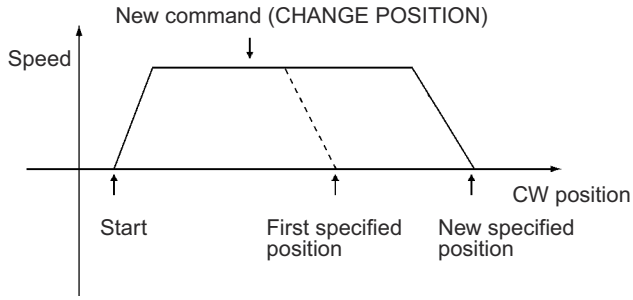

With Reversal

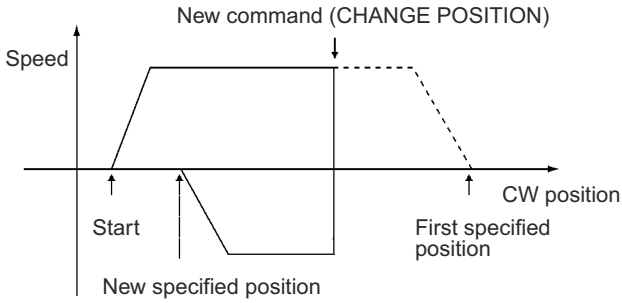

Multiple Start Validity

A multiple start is intended for applications that require changing the target position during operation. Therefore, to ensure that the multiple start is executed, avoid activating the multiple start right before stopping. If the multiple start is activated within 16 ms of stopping, as shown in the following figure, all the immediately preceding position command values will be output and the specified position will be reached. Newly specified position command values, however, may become invalid.

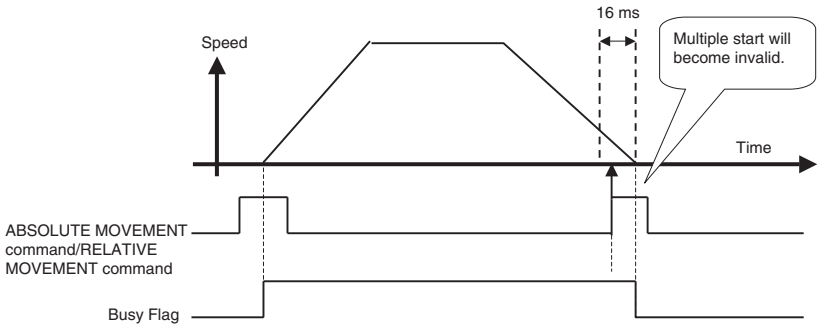

If a multiple start must be activated in this time period as required by an application, turn ON the start bit for a specified time as shown in the following figure. This case will be treated as starting the next operation rather than as a multiple start. The Busy Flag will therefore change from OFF to ON.

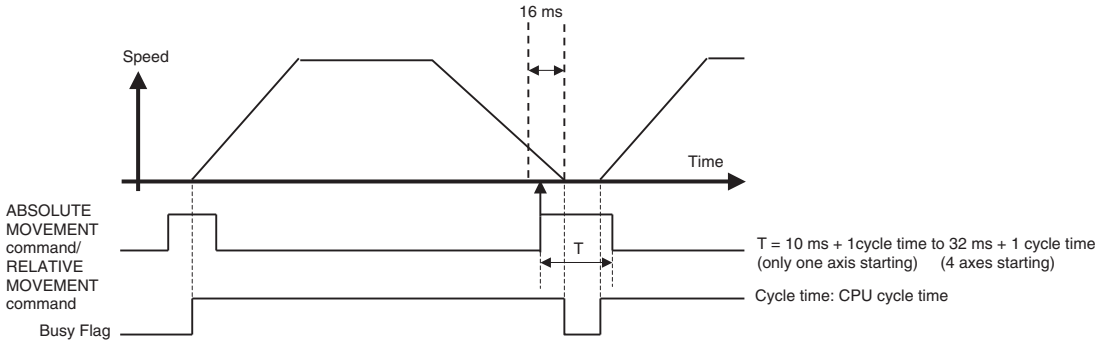

If the following operations are performed during pulse output, the pulse output will stop immediately.

- Pulse output will stop if 0 is specified for a relative positioning operation with the origin not established.
- Pulse output will stop if 0 is specified for either an absolute or relative positioning operation when the software limit function is disabled.

The present position at this time (i.e., when pulse output stops) will be equal to the number of pulses actually output. If any of the above operations are performed after pulse output has stopped, the present position will be taken to be 0.

7-4-5 Starting Direct Operation During Memory Operation

Direct operation can be used even during memory operation, by bringing the active axis to a decelerated stop. The interrupted sequence number will be retained as long as new sequence numbers are not set and provided an origin search or an origin return is not executed, or the present position is reset.

When memory operation is restarted, the interrupted sequence number will be executed. Positioning in memory operation after direct operation has been used will vary according to the absolute and relative positions in the position data.

Absolute Movement Memory Operation

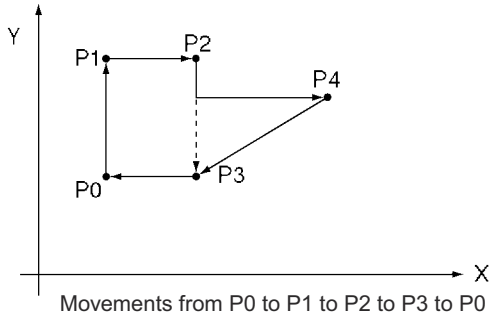

Movements from P0 to P1 to P2 to P3 to P0 are all executed with absolute position data.

While moving from P2 to P3, stop with a deceleration stop and move to P4 in a direct operation.

When memory operation is re-started, the movements are from P4 to P3 to P0.

Relative Movement Memory Operation

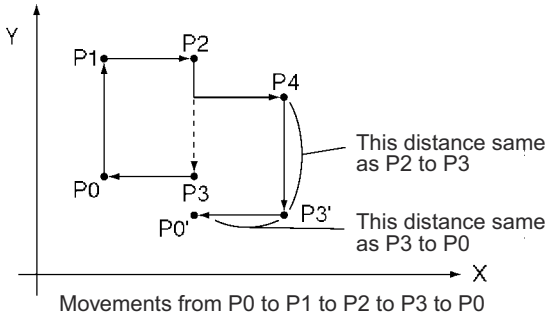

Movements from P0 to P1 to P2 to P3 to P0 are all executed with relative position data.

While moving from P2 to P3, stop with a deceleration stop and move to P4 in a direct operation.

When memory operation is re-started, the movements are from P4 to P3' to P0'.

7-5 Direct Operation Timing Charts

This section provides timing charts showing ABSOLUTE MOVEMENT command and RELATIVE MOVEMENT command execution. The X axis is used as an example.

Timing Charts

Example 1: Moving to absolute position at 10,000 pulses

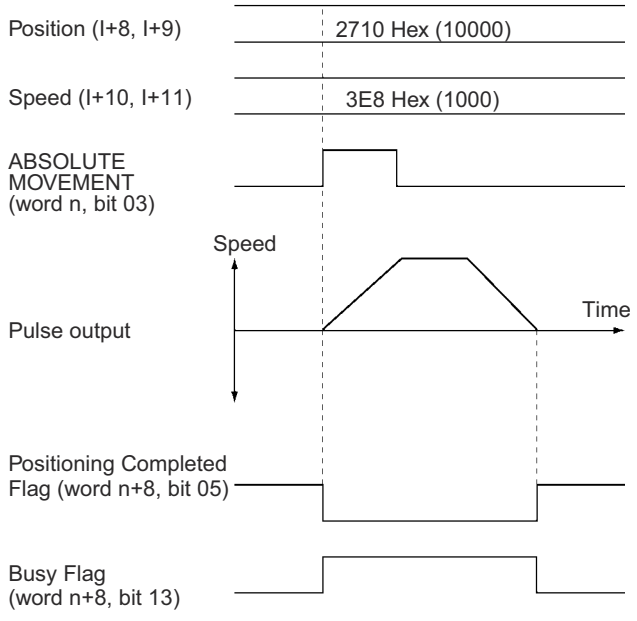

Example 2: Changing target position to absolute position at –10,000 pulses while moving to absolute position at 10,000 pulses

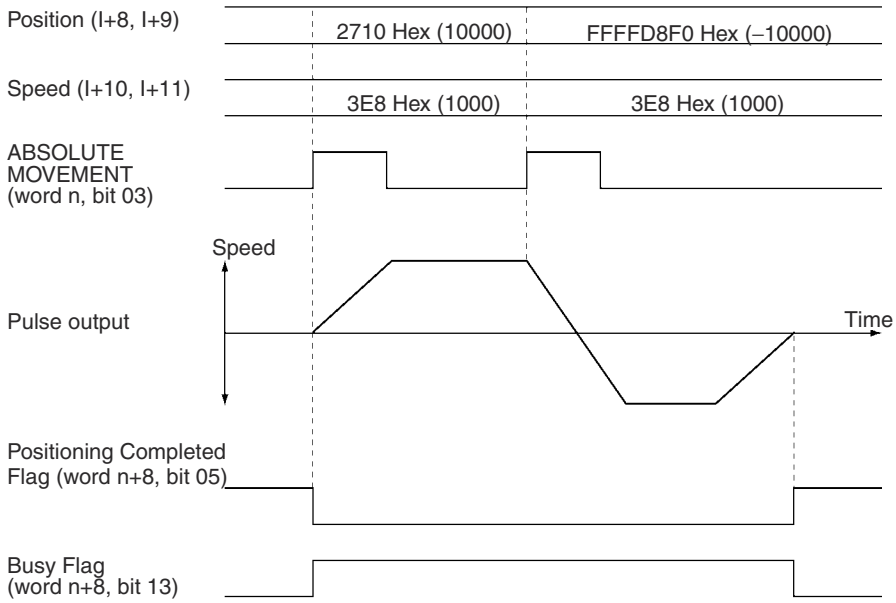

Example 3: Moving to relative position at 10,000 pulses

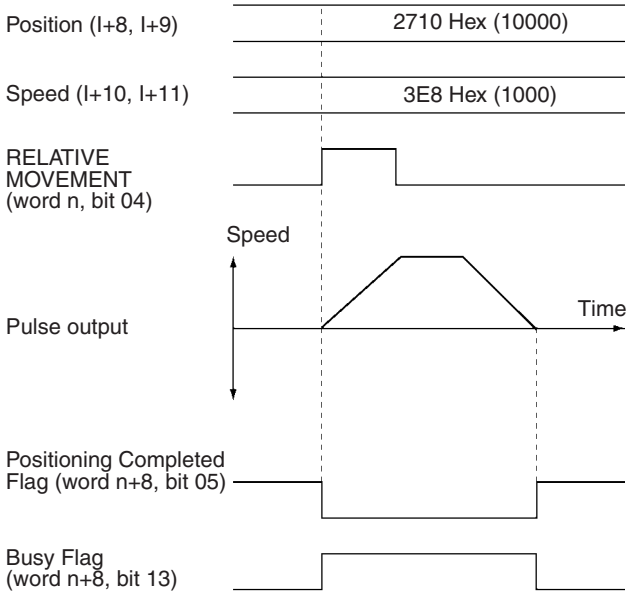

Example 4: Changing the target position to relative position at –10,000 pulses while moving to relative position at 10,000 pulses

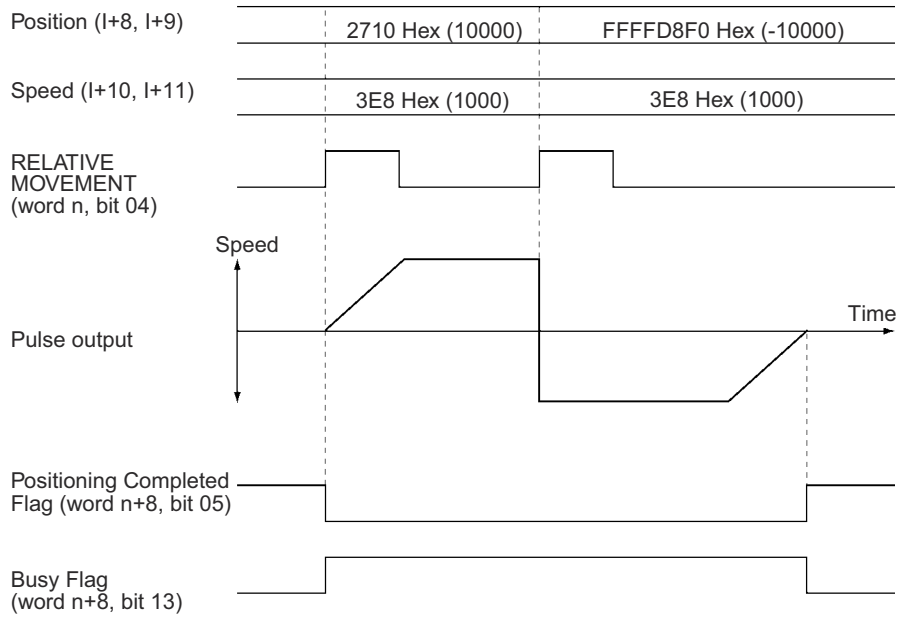

Note

(1) If the speed is changed during direct operation, the motor will be accelerated or decelerated to the new speed.

(2) If an absolute move command to the present position or a relative move command with position data of 0 is executed (i.e., when a linear movement is made with a travel distance of 0), the Busy Flag will be turned ON for one cycle at startup.

7-6 Acceleration/Deceleration

If the acceleration/deceleration time designation is set to 0 in an axis parameter area in the operating data area for direct operation, the acceleration time is the time it takes to reach the maximum speed from the initial speed (which is also set in the axis parameter area). Similarly, the deceleration time is the time it takes to go from the maximum speed to the initial speed. If the acceleration/deceleration time designation is set to 1, the acceleration or deceleration time is directly set as the time from the present speed to the target speed.

This section describes the acceleration and deceleration times when operation is performed using a speed command specified for direct operation with the acceleration/deceleration time designation set to 0.

7-6-1 Calculation of Basic Acceleration/Deceleration Times

The actual acceleration time T_1, and actual deceleration time T_2 are determined according to the following equations.

Actual acceleration time, $T_1 = (V_1 - V_0)/(V_{MAX} - V_0) \times Ta$

Actual deceleration time, $T_2 = (V_1 - V_0)/(V_{MAX} - V_0) \times Td$

- The following axis parameter settings are used:
  - Maximum speed, V_{MAX} (pps)
  - Initial speed, V_0 (pps)
- The following operating data area settings are used:
  - Position

- Speed, V_1 (pps)
- Acceleration time, Ta (ms)
- Deceleration time, Td (ms)

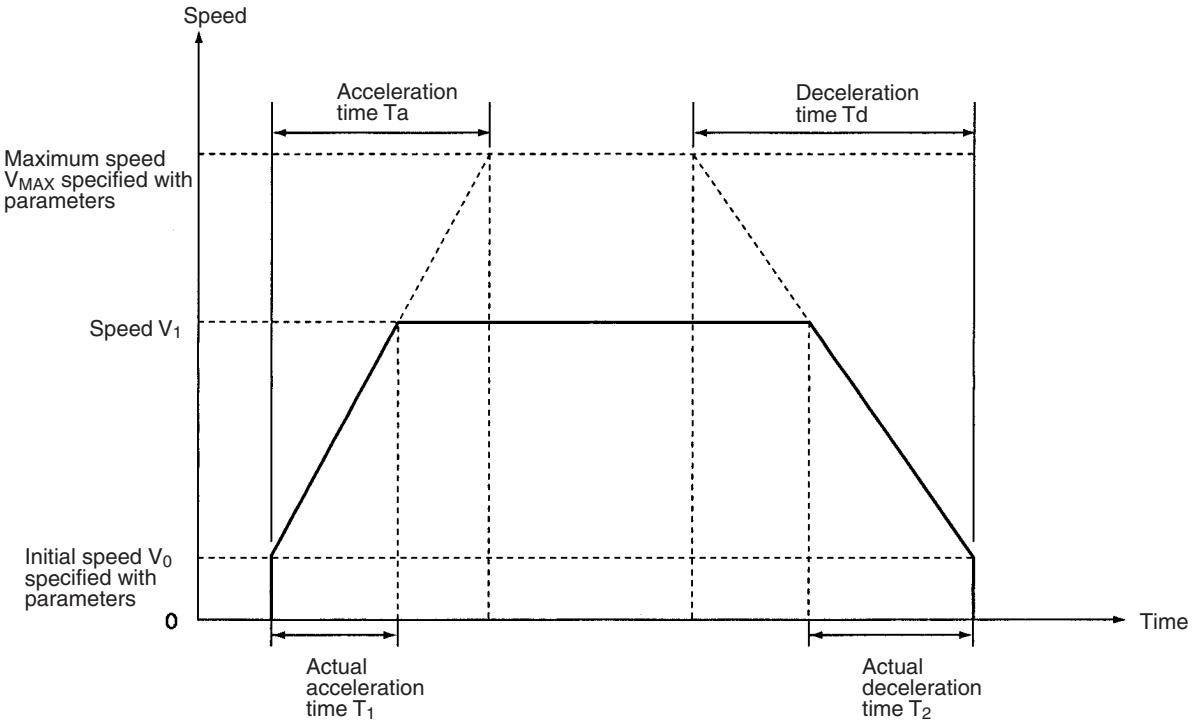

Note If override is enabled (i.e., the Override Enable Bit is ON), the speed will be as follows:
Speed = Operating data area's speed setting × Operating data area's override setting ÷ 100.

7-6-2 Calculation of Acceleration/Deceleration Times for Continuous Positioning

The actual acceleration and deceleration times when a command for a new positioning operation is made during direct operation can be calculated in the way shown below.

Case 1: Speed for the Next Positioning Operation is Faster

Actual acceleration time, $T_1 = (V_1 - V_0)/(V_{MAX} - V_0) \times Ta$
Actual acceleration time, $T_2 = (V_2 - V_1)/(V_{MAX} - V_0) \times Ta$
Actual deceleration time, $T_3 = (V_2 - V_0)/(V_{MAX} - V_0) \times Td$

- The following axis parameter settings are used:
  - Maximum speed, V_{MAX} (pps)
  - Initial speed, V_0 (pps)
- The following operating data area settings are used:

  First Command
  - Position
  - Speed, V_1 (pps)
  - Acceleration time, Ta (ms)
  - Deceleration time, Td (ms)

Next Command

- Position
- Speed, V_2 (pps)

Note When the designations for the next positioning operation are given during operation, T_2 and T_3 are calculated using the acceleration time Ta and deceleration time Td specified at the time operation started from the stopped position. It is not necessary to specify new acceleration and deceleration times.

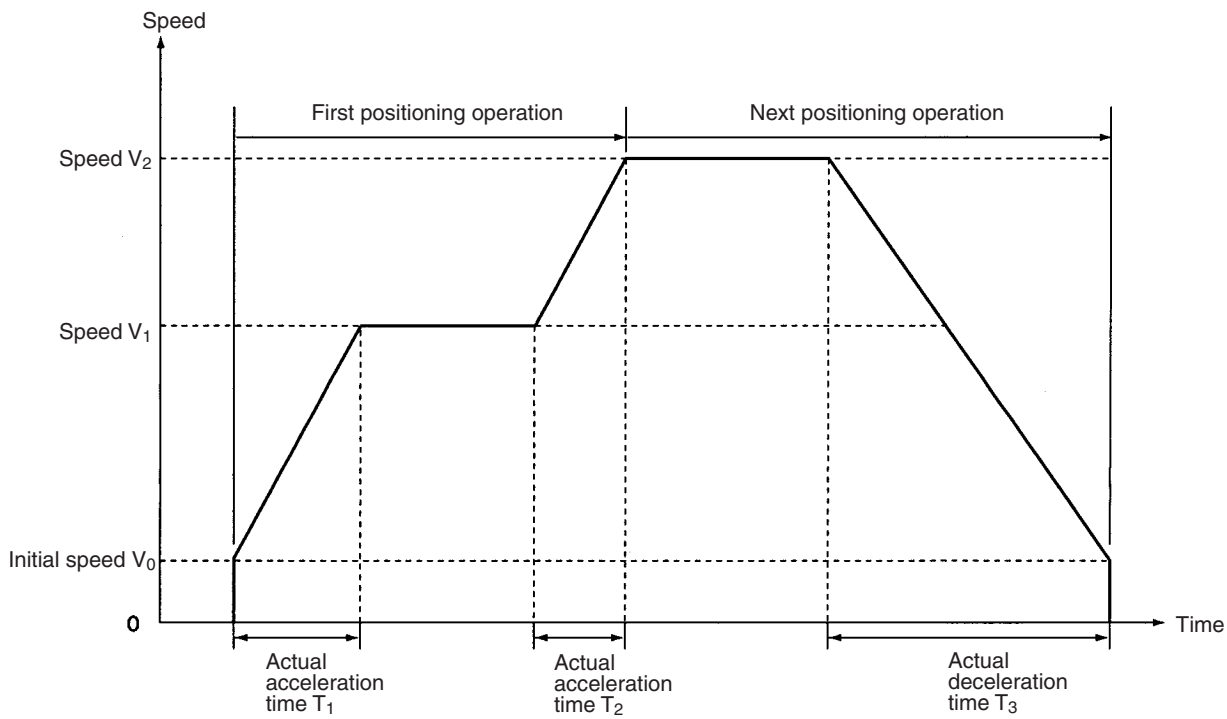

Case 2: Speed for the Next Positioning Operation is Slower

In this case ($V_1 > V_2$), the calculations will be the same as before except for T_2, which is determined according to the following equation.

Actual acceleration time $T_2 = (V_1 - V_2)/(V_{MAX} - V_0) \times Td$

7-6-3 Calculation of Acceleration/Deceleration Times when the Speed is Changed During Operation

If the speed or the override setting is changed during direct operation, the motor will be accelerated or decelerated to the new speed. The actual acceleration and deceleration times for this kind of operation can be calculated in the way shown below.

Case 1: Next Speed is Faster

Actual acceleration time, $T_1 = (V_1 - V_0)/(V_{MAX} - V_0) \times Ta$

Actual acceleration time, $T_2 = (V_2 - V_1)/(V_{MAX} - V_0) \times Ta$

Actual deceleration time, $T_3 = (V_2 - V_0)/(V_{MAX} - V_0) \times Td$

- The following axis parameter settings are used:
  - Maximum speed, V_{MAX} (pps)
  - Initial speed, V_0 (pps)
- The following operating data area settings are also used:

  First Positioning Operation

- Position
- Speed, V_1 (pps)
- Acceleration time, Ta (ms)
- Deceleration time, Td (ms)

Next Positioning Operation

- Speed, V_2 (pps)

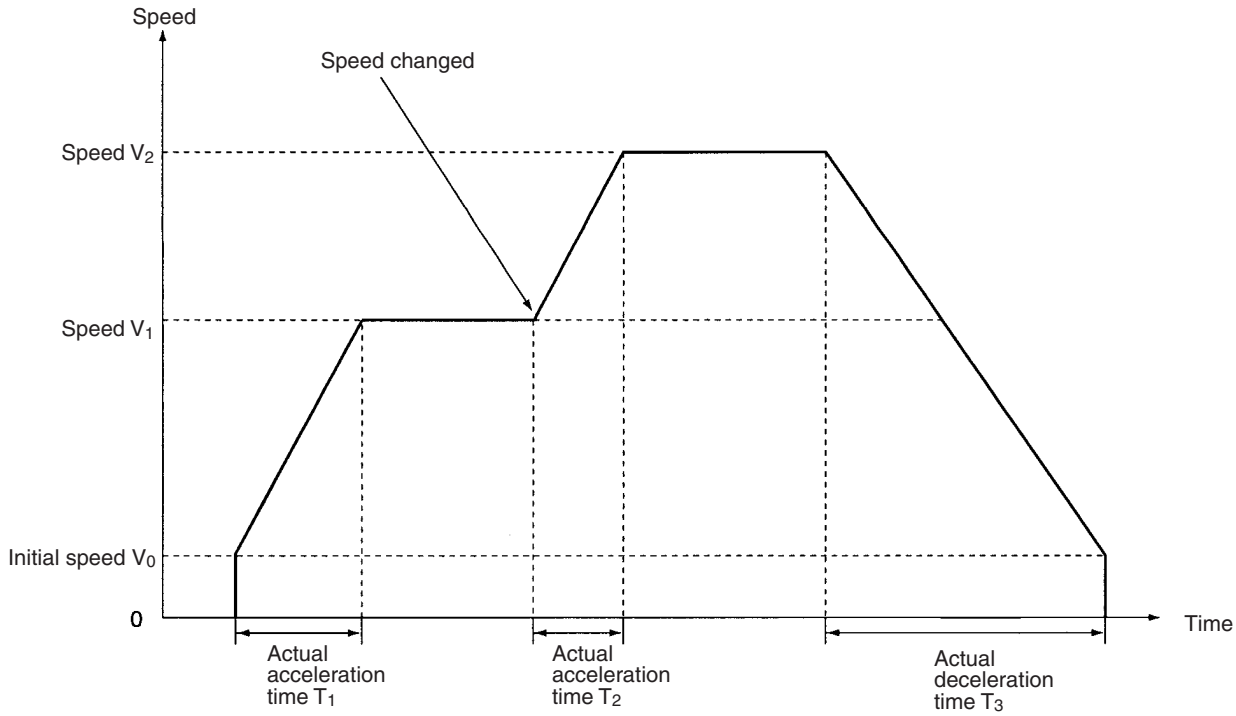

Case 2: Next Speed is Slower

In this case ($V_1 > V_2$), the calculations will be the same as above except for T_2, which is determined according to the following equation.

Actual acceleration time $T_2 = (V_1 - V_2)/(V_{MAX} - V_0) \times Td$

7-7 Sample Program

This section provides a sample program for operating the axes. The PCU used is an NC113.

The default settings in the PCU are used for the axis parameters. If the values have been modified by data transfer, for example, the results achieved will vary from those given below.

7-7-1 Details of Operation

The X axis is moved by relative movement at a speed of 15,000 pps to the position at 135,000 pulses. The speed is not modified by override.

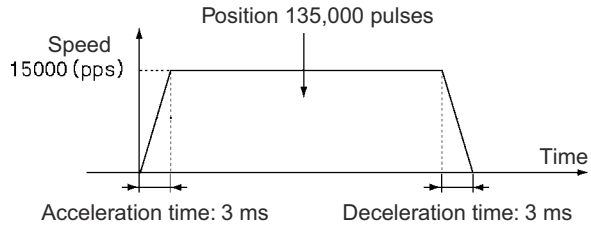

The values set for the acceleration and deceleration times and the actual acceleration and deceleration times are related to the values set for the actual target speeds and maximum speeds for the axis parameter area. For details, refer to *Appendix B Estimating Times and Pulses for Acceleration/Deceleration*.

7-7-2 Setting Conditions and Details

The following table shows details of settings and conditions.

Item	Details
Unit number of PCU	Set to unit #3. Common parameter area: D20300 through D20302. Operating memory area: CIO 2030 through CIO 2034. The above areas are allocated automatically by setting the unit number.
Operating data area designation	D20300 [0][0][0][D] D20301 [0][1][F][4] - - - - D00500
Axis parameter designation	D20302 [0][0][0][0] - - - - Use the PCU's existing parameters.

7-7-3 Sample Program

For details on the operating data area, refer to *4-5 Operating Data Area*.

Data Configuration and Operating Data Area Set by the Program

Name	Configuration	DM	Contents
Position	Leftmost 15 I+9 00 / Rightmost 15 I+8 00 Setting range: C0000001 to 3FFFFFFF Hex (–1,073,741,823 to 1,073,741,823 pulses)	00508 00509	0F58 0002
Speed	Leftmost 15 I+11 00 / Rightmost 15 I+10 00 Setting range: 1 to 7A120 Hex (1 to 500,000 pps)	00510 00511	3A98 0000

Name	Configuration	DM	Contents
Acceleration time	Leftmost: 15 I+13 00 Rightmost: 15 I+12 00 Setting range: 0 to 3D090 Hex (0 to 250,000 ms)	00512 00513	0064 0000
Deceleration time	Leftmost: 15 I+15 00 Rightmost: 15 I+14 00 Setting range: 0 to 3D090 Hex (0 to 250,000 ms)	00514 00515	0064 0000

Program Example In the following example, W030 is used as a work bit.

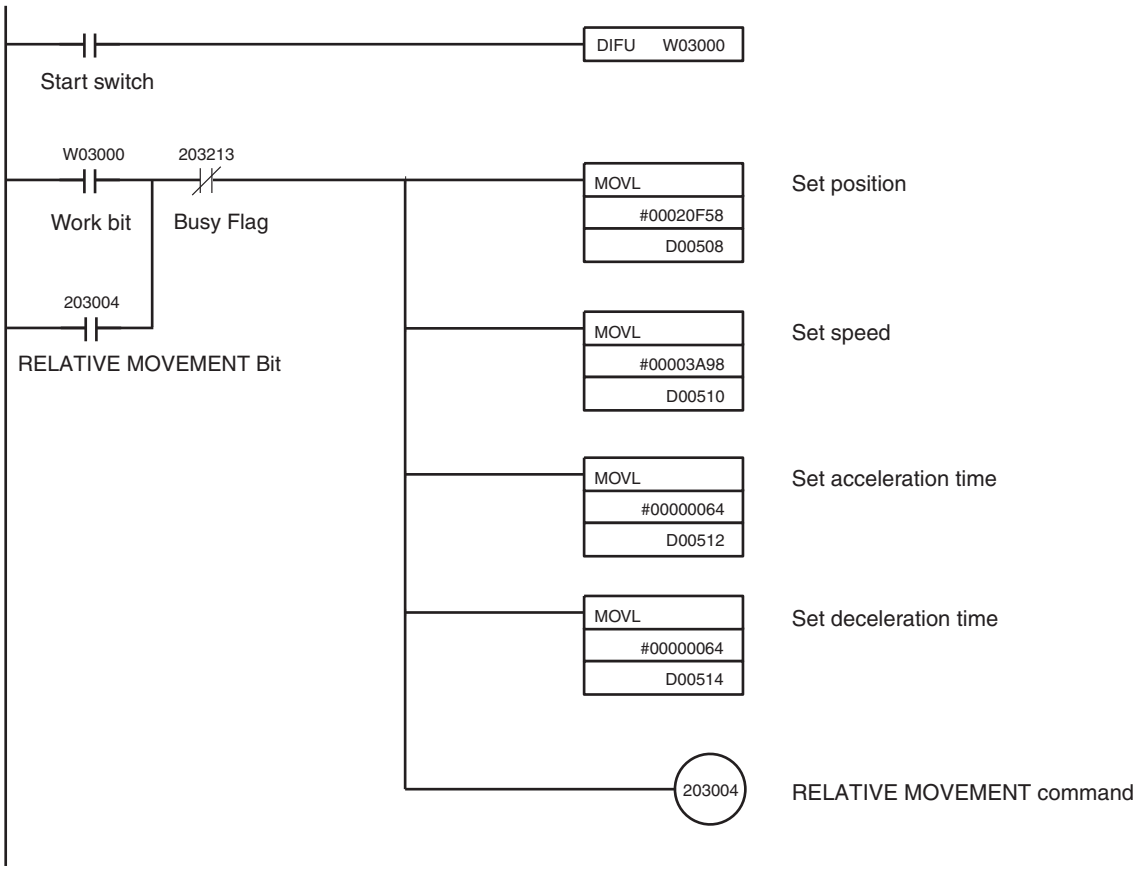

7-7-4 Program Using Function Blocks

The following example shows function blocks for the ABSOLUTE MOVEMENT command.

Use of function blocks provides the following advantages.

- Bits for commands and address calculations for data areas that depend on the unit number and axis number are automatically calculated in the function block, reducing the work required to perform calculations.
- Acceleration times, deceleration times, position command values, speed command values, and other settings can be easily made.
- Function blocks can be freely named, simplifying program management.

Refer to the following documentation for details on function blocks.

- Using Function Blocks for the First Time
  Function Block Introduction Guide (R133)
- Using Function Blocks for Each Associated Device
  OMRON FB Library Start-up Guide (R123)
  OMRON FB Library Reference Manual (W442)

When the starting trigger is changed from OFF to ON, the servomotor (axis 1) connected to the Position Control Unit for unit number 0 is operated using the ABSOLUTE MOVEMENT command.

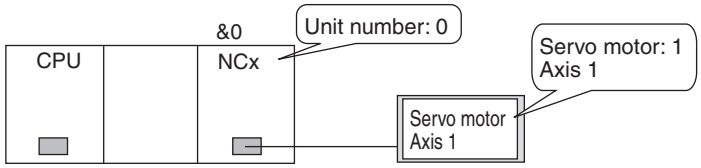

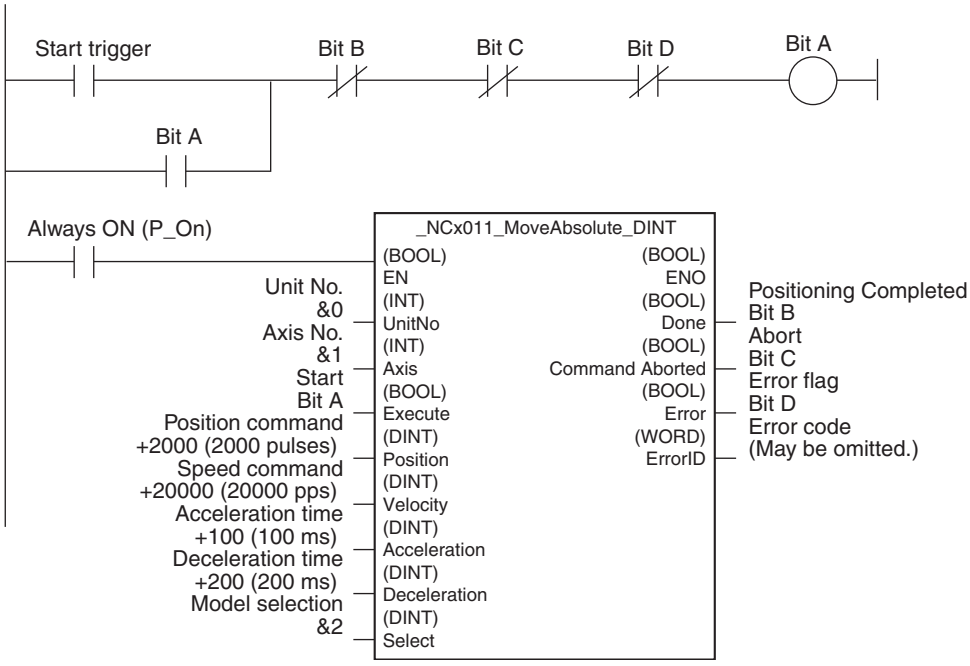

SECTION 8
Memory Operation

This section provides an overview of memory operation, describes the parameter and data settings required to perform memory operation, and gives sample programs.

8-1 Outline . . . 196
- 8-1-1 Axis Designation . . . 197
- 8-1-2 Axis Designation and Flags . . . 197

8-2 Memory Operation Procedure . . . 199

8-3 Setting Data for Memory Operation . . . 200
- 8-3-1 Beginning Words of Operating Memory Area, Operating Data Area, and Parameter Areas . . . 200
- 8-3-2 Axis Parameter Area . . . 201
- 8-3-3 Operating Memory Area . . . 202
- 8-3-4 Operating Data Area . . . 202

8-4 Positioning Sequences . . . 202
- 8-4-1 Sequence Format . . . 203
- 8-4-2 Axis Designation . . . 204
- 8-4-3 Output Code . . . 204
- 8-4-4 Position Designation . . . 205
- 8-4-5 Completion Code . . . 206
- 8-4-6 Dwell Time Number . . . 207
- 8-4-7 Acceleration and Deceleration Time Numbers . . . 208
- 8-4-8 Initial Speed and Target Speed Numbers . . . 209

8-5 Completion Codes . . . 209
- 8-5-1 Starting Memory Operation . . . 209
- 8-5-2 Memory Operation In Accordance With Positioning Sequences . . . 209

8-6 Linear Interpolation . . . 213
- 8-6-1 Using Continuous Completion with Linear Interpolation . . . 215

8-7 Transferring Positioning Sequences . . . 217
- 8-7-1 PCU's Internal Addresses . . . 217
- 8-7-2 Transferring 100 Positioning Sequences from the CPU Unit to the PCU 218

8-8 Timing Chart for Memory Operation . . . 219
- 8-8-1 Busy Flag . . . 219
- 8-8-2 Sequence Number Enable Bit . . . 220
- 8-8-3 Timing Chart for INDEPENDENT START . . . 220
- 8-8-4 Timing Chart for START . . . 221
- 8-8-5 Timing of Data Changes during Memory Operation . . . 222

8-9 Acceleration/Deceleration . . . 223
- 8-9-1 Calculation of Basic Acceleration/Deceleration Times . . . 223
- 8-9-2 Calculation of Acceleration/Deceleration Times for Continuous Positioning . . . 224

8-10 Sample Program . . . 226
- 8-10-1 Operation . . . 226
- 8-10-2 Conditions and Details of Settings . . . 227
- 8-10-3 Setting Data . . . 227
- 8-10-4 Program Example . . . 228

8-1 Outline

During memory operation, positioning sequence data such as positions and speeds are transferred to the internal memory of the Position Control Unit (PCU) in advance, and positioning is carried out by following the positioning sequences according to commands from the Programmable Controller.

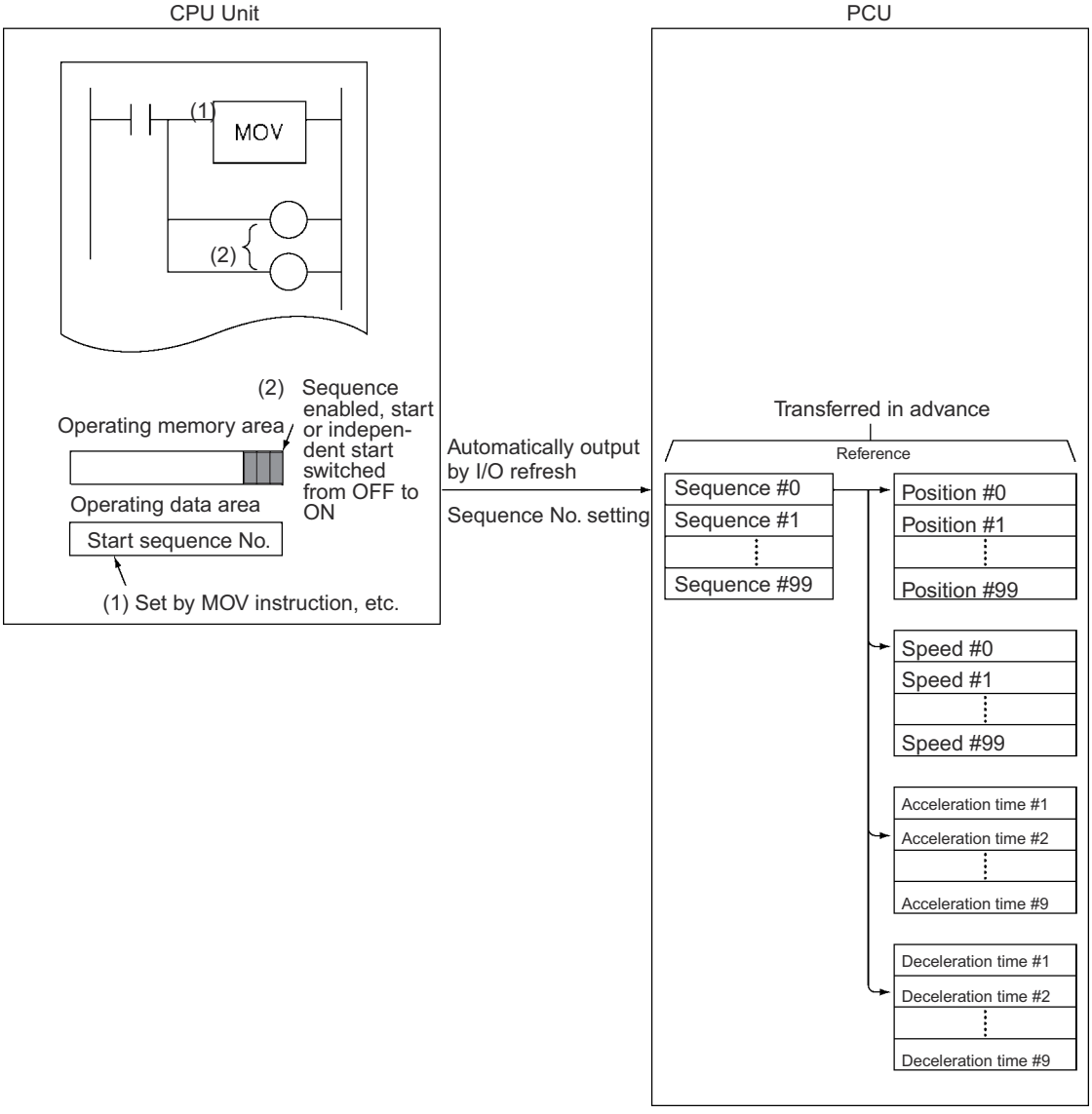

The positioning sequences are sent in advance by data transfer to the PCU. After the sequence numbers to be used have been set in the operating memory area, the Sequence Number Enable Bit is switched ON.

Start is executed when the start or independent start allocated to the operating memory area (CIO Area) is turned ON.

The PCU carries out positioning using the speeds, acceleration times, deceleration times and dwell times set in the designated sequence numbers. The positions have the same numbers as the positioning sequences.

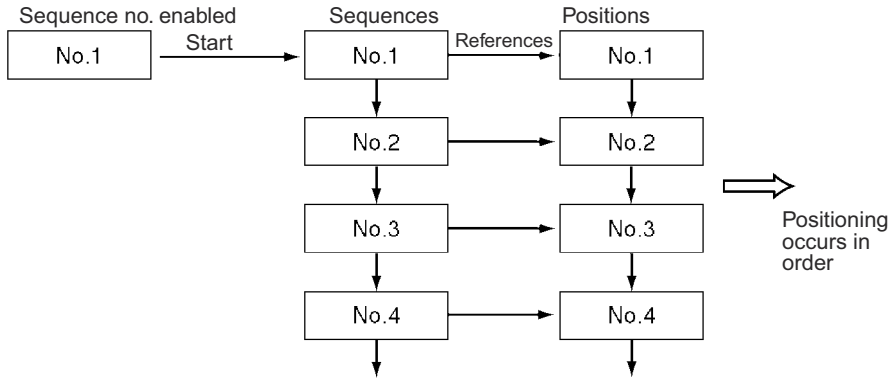

Note

- Since the sequence number is saved in the PCU, the PCU is capable of executing the subsequent sequence after being stopped with the deceleration stop. However, if the origin search, origin return, or present position preset is executed, this sequence number will be lost. Therefore, the sequence number needs to be set to “enable” and the PCU must be restarted.
- Sequence #0 is executed after sequence #99.

8-1-1 Axis Designation

Which axis is to be positioned with the positioning sequence is specified by the axis designation within the positioning sequence. The positions used are those for the axes designated by the axis designation. For data other than position data, the data of the axis that started operation is used as the data to be designated in the sequence data.

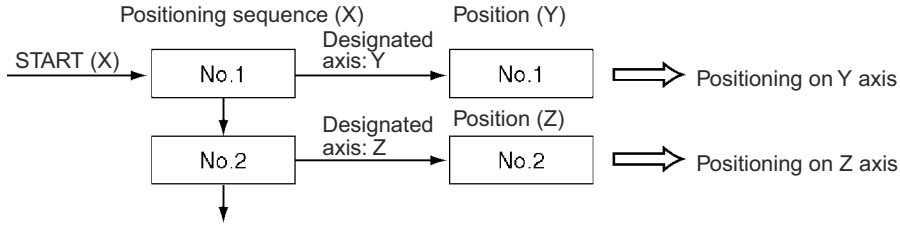

If several axes are designated by the axis designation, interpolated operation will be executed for the designated axes.

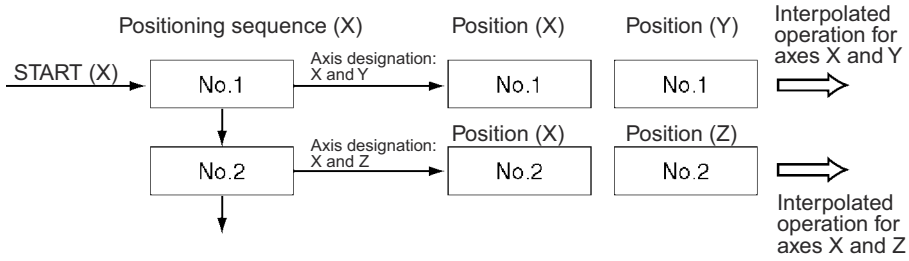

8-1-2 Axis Designation and Flags

The status and present position allocated to the operating memory area and operating data area are input for the “starting axis” (i.e. the axis whose positioning sequence is used to start operation) and for the “designated axis/axes”

(i.e., the axis/axes specified in the axis designation of the positioning sequence).

Starting Axis

Operating Memory Area

Model	Word				Bit	Name
	X axis	Y axis	Z axis	U axis		
NC4□3	n+8	n+11	n+14	n+17	04	Waiting For Memory Operation Flag
NC2□3	n+4	n+7			05	Positioning Completed Flag
NC1□3	n+2				11	Teaching Completed Flag
					12	Error Flag (See note)
					14	Data Transferring Flag (X axis only)

Operating Data Area

Model	Word				Bit	Name
	X axis	Y axis	Z axis	U axis		
NC4□3	n+59	n+63	n+67	n+71	00 to 15	Output code
NC2□3	n+35	n+39				
NC1□3	n+23					

Designated Axis

Operating Memory Area

Model	Word				Bit	Name
	X axis	Y axis	Z axis	U axis		
NC4□3	n+8	n+11	n+14	n+17	06	No Origin Flag
NC2□3	n+4	n+7			07	Origin Stop Flag
NC1□3	n+2				08	Zone 0 Monitor Flag
					09	Zone 1 Monitor Flag
					10	Zone 2 Monitor Flag
					12	Error Flag (See note)
					13	Busy Flag
					15	Deceleration Stop Execution Flag

Operating Data Area

Model	Word				Bit	Name
	X axis	Y axis	Z axis	U axis		
NC4□3	n+56 n+57	n+60 n+61	n+64 n+65	n+68 n+69	00 to 15 00 to 15	Present position (rightmost) Present position (leftmost)
NC2□3	n+32 n+33	n+36 n+37				
NC1□3	n+20 n+21					

Note The Error Flag is input for either the starting axis or the designated axis, depending on the type of error.

In the following example, the Y axis is specified by the axis designation when starting from the X axis.

PCU Model: NC413
Sequence #0 (X)

Designated Axis: Y
Completion Code: Terminating

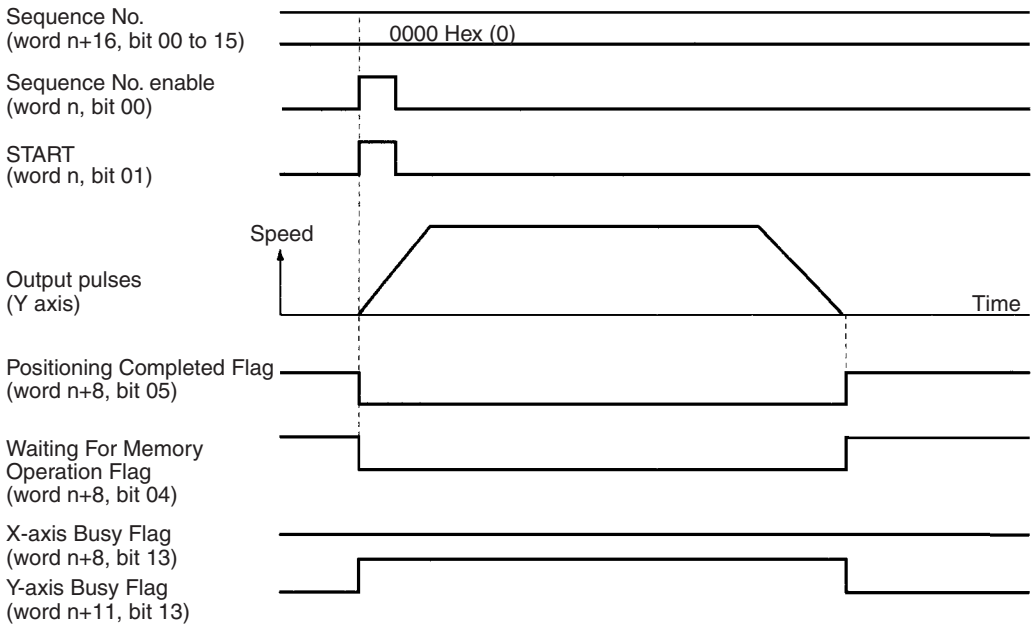

- A multiple start error (error code 8000) will occur if the axis designated in one axis designation in the positioning sequence is overlapped by another positioning sequence.
- A multiple start error (error code 8000) will occur if a command other than a memory operation command (such as origin search) is made for the axis for which start has been executed for memory operation.

Example:

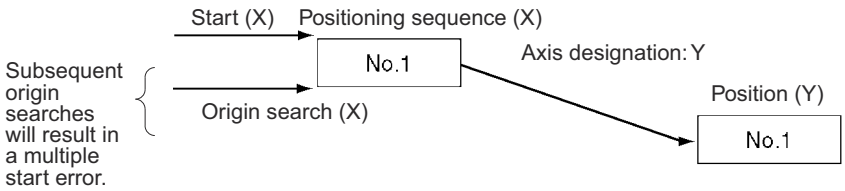

Therefore, for memory operation, commands for the active axis are treated as multiple starts.

8-2 Memory Operation Procedure

The procedures for setting data for memory operation are explained below using the X axis as an example.

1,2,3...

1. Set the common parameters. (Refer to *4-2 Common Parameter Area*.)
   m: Set the operating data area either to DM or to EM.
   m+1: Set the beginning word of the operating data area (I).
   m+2: Designate the axis parameters.
2. Power up again or restart.
   The data in the common parameter area set in (1) above is enabled.
3. Transfer the data. (Refer to *SECTION 5 Transferring and Saving Data*.)
   Transfer the data set for the common parameters and for the axes to the PCU.

4. Execute START.
   Set the sequence number for beginning operation (word n+16, bits 00 to 15).
   Turn ON the Sequence Number Enable Bit (word n, bit 00).
   Turn START (word n, bit 01) or INDEPENDENT START (word n, bit 02) from OFF to ON.

The operations in (1) and (2) above are required when using a PCU for the first time, or when modifying the data in the common parameter area.

The procedure given in step 4 is also used to start sequence number 0.

8-3 Setting Data for Memory Operation

A simple explanation of the axis parameter area and operating memory area settings that are used when executing memory operation is given below.

For setting methods and other details, refer to *4-3 Axis Parameter Area* and *4-4 Operating Memory Area*.

8-3-1 Beginning Words of Operating Memory Area, Operating Data Area, and Parameter Areas

The beginning words of the operating memory area, operating data area, and common parameter area used for a Position Control Unit (PCU) are determined (or set) according to the following.

- Beginning word of the operating memory area, n = CIO 2000 + 10 × unit number
- Beginning word of the common parameter area, m = D20000 + 100 × unit number
- Beginning word of the operating data area, l, is specified in m and m+1.

Set the beginning words of the operating data area and designate the axis parameters used with the common parameters as shown below.

Word	Name	Bit	Reference
m	Operating data area designation	00 to 15	*SECTION 4*
m+1	Beginning word of operating data area	00 to 15	
m+2	Axis parameter designation	00 to 15	

8-3-2 Axis Parameter Area

Item	Axis parameter area				Bits	Contents
	NC1□3	NC2□3	NC4□3			
	X axis	Y axis	Z axis	U axis		
I/O settings	m+4	m+32	m+60	m+88	04 to 06	08 03 Limit input signal type 0: N.C. input; 1: N.O. input Origin proximity input signal type 0: N.C. input; 1: N.O. input Origin proximity input signal type 0: N.C. input; 1: N.O. input
Operation mode Origin search operation Origin detection method Origin search direction Origin search preset (supported for unit version 2.2 or later)	m+5	m+33	m+61	m+89	00 to 03 04 to 07 08 to 11 12 to 15	15 00 Operation mode 0 to 3: Modes 0 to 3 Origin search operation 0: Reverse mode 1 1: Reverse mode 2 2: Single-direction mode 3: Reverse mode 3 Origin detection method 0: With origin proximity input signal reversal 1: Without origin proximity input signal reversal 2: Origin proximity input signal not used 3: Limit input signal used instead of origin proximity input signal Bit 12: Origin search direction (0: CW direction; 1: CCW direction) Bit 13: Origin search preset (0: Not set; 1: Set)
Acceleration time	m+20 m+21	m+48 m+49	m+76 m+77	m+104 m+105	00 to 15 (Rightmost) 00 to 15 (Leftmost)	15 Leftmost 00 15 Rightmost 00 Setting range: 0 to 3D090 Hex (0 to 250,000 ms)
Deceleration time	m+22 m+23	m+50 m+51	m+78 m+79	m+106 m+107	00 to 15 (Rightmost) 00 to 15 (Leftmost)	

Note The speed data specified for initial speed #2 in the sequence data is used as the initial speeds for memory operation. The initial speed in the axis parameters are not used.

8-3-3 Operating Memory Area

Item	Model	Operating memory area				Bits	Contents
		X axis	Y axis	Z axis	U axis		
START	NC413 NC213 NC113	n n n	n+2 n+2	n+4	n+6	01	↑ : Start begins
INDEPENDENT START						02	↑ : Independent start begins
Sequence Number Enable						00	1: Enable, 0: disable
Waiting For Memory Operation	NC413 NC213 NC113	n+8 n+4 n+2	n+11 n+7	n+14	n+17	04	1: Waiting for memory operation 0: Other than above
Positioning Completed Flag						05	↑ : Positioning operation completed ↓ : When starting
Busy Flag						13	1: Busy (See note)

Note The Busy Flag will turn ON at the following times during memory operation:

- During pulse output
- While waiting for the dwell time to elapse
- While waiting for positioning completed status to be confirmed
- During linear interpolation

8-3-4 Operating Data Area

Item	Model	Operating memory area				Bits	Contents
		X axis	Y axis	Z axis	U axis		
Sequence number	NC413 NC213 NC113	I+16 I+16 I+16	I+28 I+28	I+40	I+52	00 to 15	Specifies the sequence number in hexadecimal.
Output code	NC413 NC213 NC113	I+59 I+35 I+23	I+63 I+39	I+67	I+71	00 to 15	The output code (0 to F) set in the positioning sequence is output in hexadecimal.

Note

1. When positioning is executed with positions designated as absolute, a present position unknown error (error code 5040) will be generated if the origin has not been established.
2. If the software limit function set with the axis parameters is disabled (CW limit equal to or less than CCW limit), and if the designation is made while the origin is established (No Origin Flag OFF), positioning will be carried out by a relative amount, even with absolute position data. (At the start of operation, present position is set to “0.”)

8-4 Positioning Sequences

This section explains in detail the format and settings of positioning sequences. Positioning sequences are designated from the CPU Unit when memory operation is started, and they set data required for positioning, such as the target speed number, acceleration/deceleration number, and so on.

Note With previous PCUs, data such as the target speed, acceleration/deceleration time, and so on, was set for “positioning actions,” which were the basic unit of positioning. With this PCU, however, position data is set independently. These PCUs are designed so that the position number used is the same as the number of the sequence that is started. For example, if START is executed with

sequence #50 designated, positioning will be carried out using the position data set for position #50. This positioning sequence can be used again with only the position changed, and with the other data settings left unchanged.

8-4-1 Sequence Format

Each positioning sequence is configured of three words, as shown below. Up to 100 of these sequences can be set for each axis, and transferred to the PCU and saved.

15 – 12	11 – 08	07 – 04	03 – 00
Axis designation	Output code	Position designation	Completion code
Dwell time number		Accel. time number	Decel. time number
Initial speed number		Target speed number	

The data that is used when performing memory operation using positioning sequences is as follows.

One Axis Operation

- The data (dwell time, acceleration time, deceleration time, initial speed, target speed) for the starting axis (the axes from which memory operation is started) is used.
- The acceleration/deceleration curve set for the axis specified by the axis designation will be used.
- The position set for the axis specified by the axis designation will be used.
- The initial pulse designation for the axis specified by the axis designation will be used.

Operation for Two Axes or More

- The data (dwell time, acceleration time, deceleration time, initial speed, target speed) for the starting axis is used.
- Out of the acceleration/deceleration curves set for the axes specified by the axis designation, the curve for the axis with the highest priority will be used. The X axis has the highest priority and the U axis has the lowest.
- The positions set for the axes specified by the axis designation will be used.
- Out of the initial pulse designations for the axes specified by the axis designation, the slowest will be used.

The data that is used in 1-axis operation and 2-axis operation is shown in the following table.

Operation		Bit, parameter, or data used	
		Example 1: X-axis operation started from the X axis	**Example 2: Y and Z-axis operation started from the X axis**
Starting axis		X axis	X axis
Axis from which positioning sequences are used		X axis (starting axis)	X axis (starting axis)
Axis or axes specified in positioning sequence		X axis	Y axis, Z axis
Axis parameters used	Acceleration/ deceleration curve designation	X axis (axis designation)	Y axis (determined by priority)
	Initial pulse designation	X axis (axis designation)	The initial pulse designation for the axis with the slowest setting
Axis data used	Position	X axis (axis designation)	Y axis, Z axis (axis designation)
	Speed	X axis (starting axis)	X axis (starting axis)
	Acceleration time	X axis (starting axis)	X axis (starting axis)
	Deceleration time	X axis (starting axis)	X axis (starting axis)
	Dwell time	X axis (starting axis)	X axis (starting axis)

8-4-2 Axis Designation

To designate the axes to be started (operated), set the bits for those axes to “1.” The configuration is as follows:

Bit 15	14	13	12
U axis	Z axis	Y axis	X axis

For example, to start only the X axis, set these bits to “0001.” To start the X and Z axes for linear interpolation, set these bits to “0101.”

For details on linear interpolation, refer to *8-6 Linear Interpolation*.

8-4-3 Output Code

The “output code” setting specifies an output code from 0 to F (hexadecimal) to be output when positioning is completed with memory operation.

Name	Model	Operating memory area				Bits
		X axis	**Y axis**	**Z axis**	**U axis**	
Output code	NC413	I+59	I+63	I+67	I+71	00 to 15
	NC213	I+35	I+39			
	NC113	I+23				

The output code is “0” only when memory operation is started (by START or INDEPENDENT START) with the Sequence Number Enable Bit set to “1.”

Example
Sequence #0: Continuous completion (output code: 2)
Sequence #1: Terminating completion (output code: 4)

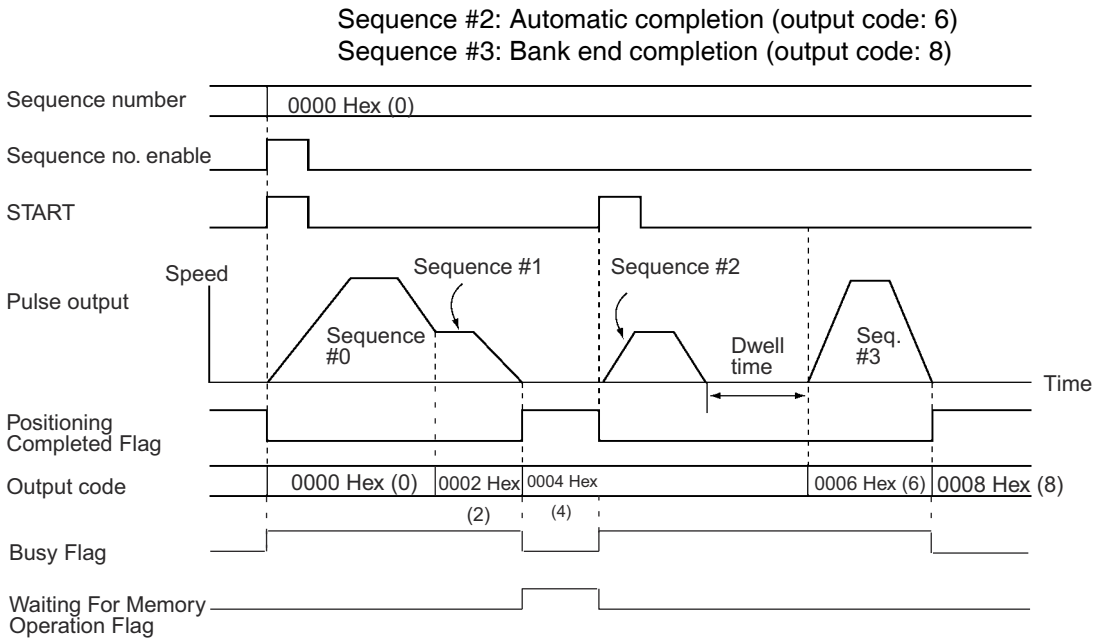

8-4-4 Position Designation

When performing positioning, specify whether to perform relative (incremental) positioning or absolute positioning. When setting positions, it is not possible to specify whether that position is to be used for relative positioning or absolute positioning within the position setting itself. With the position designation setting, specify whether the position used in the positioning sequence is to be used for relative positioning or absolute positioning.

The configuration is as follows:

0: Absolute positioning

1: Relative positioning

Bit	07	06	05	04
	U axis	Z axis	Y axis	X axis

For example, if the axis designation is set to 0111 and the position designation is set to 0001, relative positioning will be performed for the X axis and absolute positioning will be performed for the Y and Z axes.

⚠ **Caution** When positioning to a position determined using the teaching function, set the position designation setting in the positioning sequence to absolute positioning. If it is set to relative positioning, positioning will be performed to a position other than the one obtained with the teaching function.

8-4-5 Completion Code

The seven completion codes are described below.

Code	Name	Description	Operation
0	Terminating	The sequence is executed, and then positioning is stopped until START is executed for the next sequence.	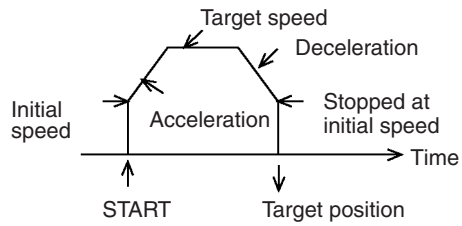
1	Automatic	The sequence is executed, and then positioning is paused for the duration of the dwell time before the next sequence is started automatically. (See note.)	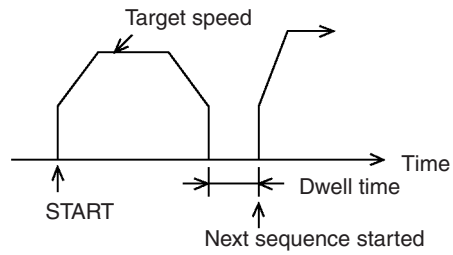
2	Continuous	The sequence is executed, and then positioning continues with the next sequence without stopping at the target position. (See note.) (If a dwell time is set, however, then positioning will pause for the duration of the dwell time.)	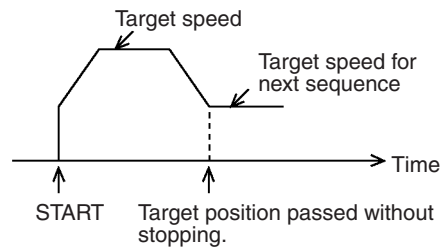
3	Bank end	Positioning is stopped after completion. When START is next executed, positioning starts again with the designated sequence when the Sequence Number Enable Bit turns ON.	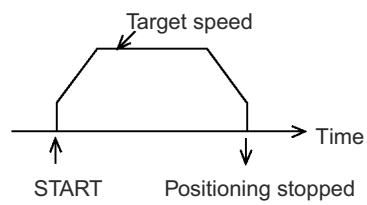
4	Speed control	Pulse output is maintained at the speed set for the sequence. The present position is calculated even during continuous output. The direction of the pulse output is determined by the “sign” set for the position data. To stop this pulse output, use the STOP command.	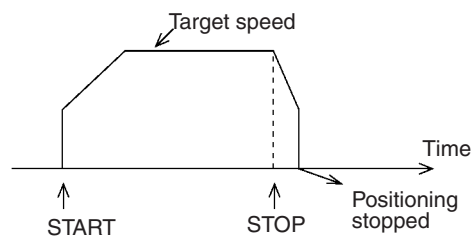 **Note** The initial speed is used at the end.

Code	Name	Description	Operation
5	Interrupt feeding (forward direction)	Pulse output is maintained at the speed set for the sequence. The direction of the pulse output is determined by the “sign” set for the position data. Following an interrupt input, the axis is moved from the input position by a specified amount in the same direction as the pulse output, and then stopped.	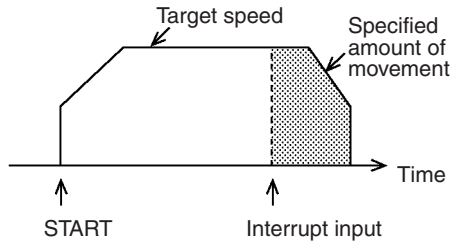
6	Interrupt feeding (reverse direction)	Following an interrupt input, the axis is moved from the input position by a specified amount in the direction opposite to the original pulse output, and then stopped. The rest of this operation is the same as for interrupt feeding in the forward direction (described above).	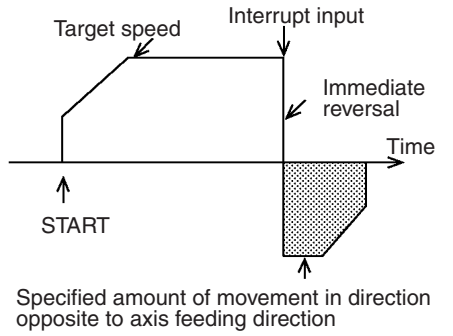

Note Sequence #0 is executed after sequence #99.

8-4-6 Dwell Time Number

This setting specifies the dwell time number, from 00 to 19 in hexadecimal (00 to 13 Hex). The contents of the settings are as follows:

00: Dwell time not used.
01 to 13 Hex: Designate dwell time numbers 1 to 19.

The dwell time can be set from 0.01 s to 9.99 s (unit: 0.01 s). The timing of the next start following the elapse of the dwell time differs depending on which operation mode is used.

Operation Mode 0 or 1

The next operation is enabled when the designated dwell time elapses following the completion of pulse output.

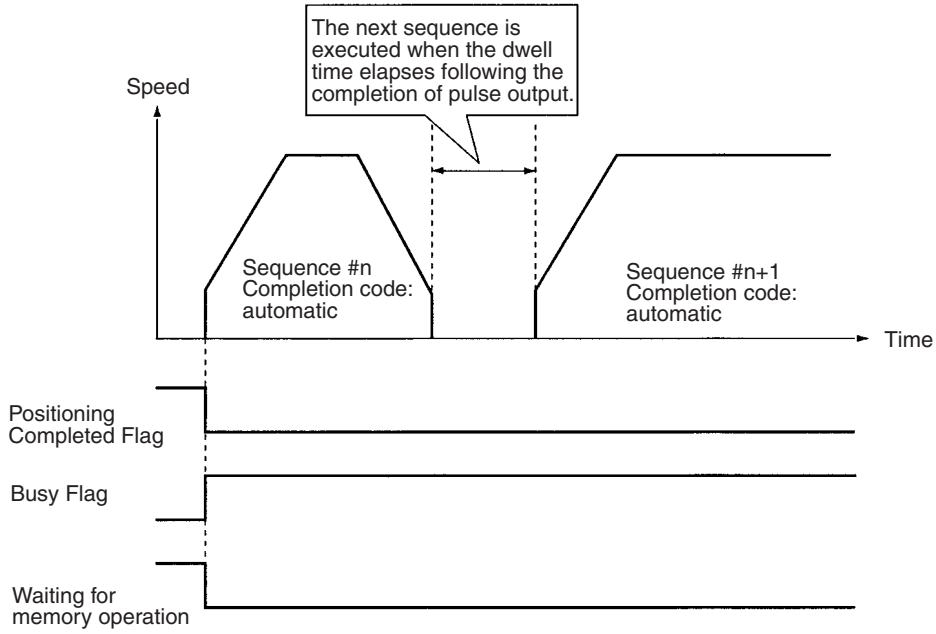

Operation Mode 2 or 3

The next operation is enabled when the designated dwell time elapses after the Servo Drive's positioning completed signal turns ON following the completion of pulse output.

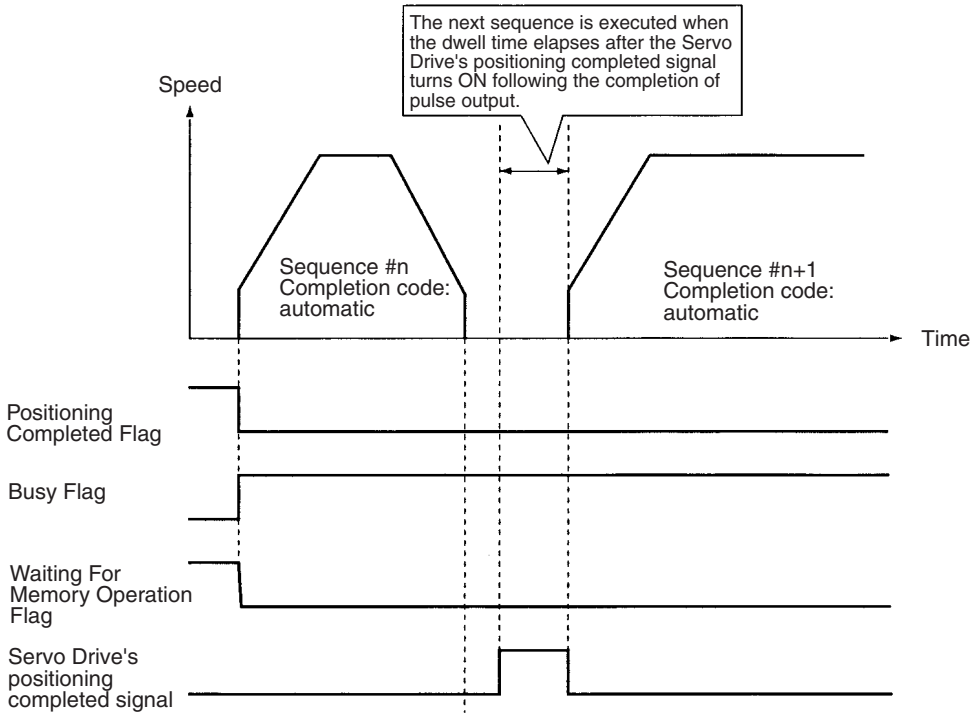

8-4-7 Acceleration and Deceleration Time Numbers

These settings specify the acceleration and deceleration times for pulse output, by setting acceleration/deceleration time numbers from 1 to 9 (Hex). When either of these is set to "0," the acceleration/deceleration time set in the axis parameter area is used.

8-4-8 Initial Speed and Target Speed Numbers

These settings specify the initial speed and target speed for pulse output, by setting speed numbers from 00 to 99 in hexadecimal (00 to 63 Hex). To set an initial speed of 0, set the speed designated with the initial speed number to 0.

8-5 Completion Codes

The following positioning can be carried out according to the positioning sequence settings.

8-5-1 Starting Memory Operation

There are two ways of starting memory operation, as follows:

1. Turn the START Bit from OFF to ON (↑).
2. Turn the INDEPENDENT START Bit from OFF to ON (↑).

Note When performing memory operation for the first time, or changing the positioning sequence used in memory operation, it is necessary to turn ON the Sequence Number Enable Bit.

When Executed by START Executes the same number position as the positioning sequence, according to the completion code in the positioning sequence.

When Executed by INDEPENDENT START Does not comply with the completion code in the positioning sequence, but always works as a terminating completion. A bank end completion (completion code 3), however, still works as a bank end operation.

8-5-2 Memory Operation In Accordance With Positioning Sequences

Positioning with memory operation is controlled by data set for the positioning sequences.

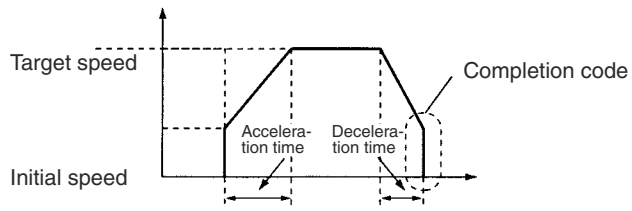

Terminating Completion (Code 0) With terminating completion, positioning is executed using the position with the same number as this positioning sequence, followed by waiting for memory operation status. Then, when the next START or INDEPENDENT START command is received, the next positioning sequence (n+1) is executed.

If a dwell time (numbers 1 to 19) has been set, the positioning sequence is terminated after the dwell time has elapsed.

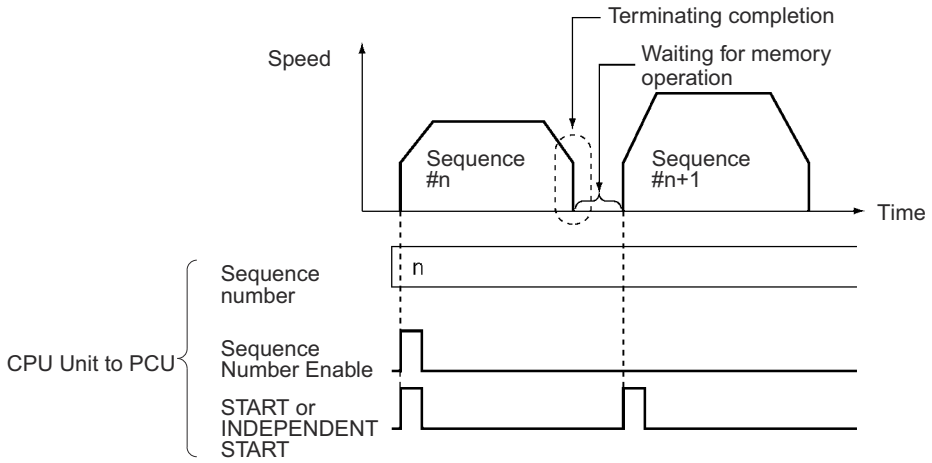

Automatic Completion (Code 1)

With automatic completion, the position with the same number as this positioning sequence is executed and positioning is paused for the duration of the dwell time. Then the position with the same number as the next (+1) positioning sequence is executed.

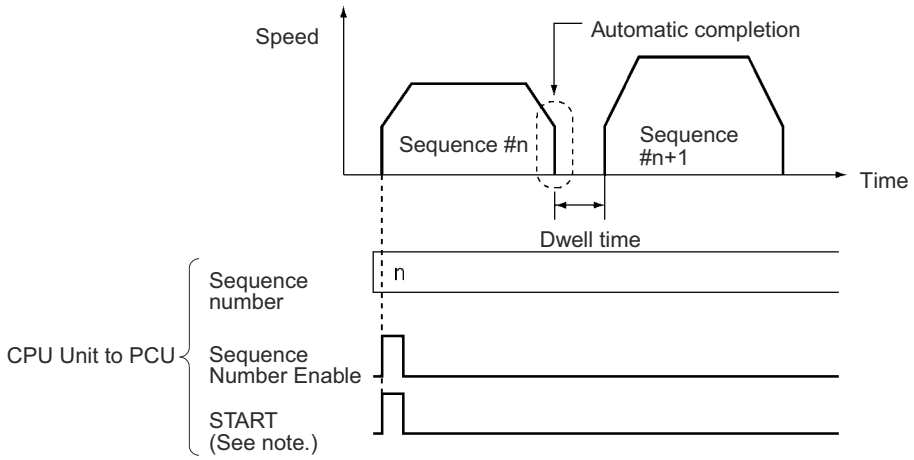

Note If INDEPENDENT START is executed, a terminating completion, and not an automatic completion, will result. If the dwell time is used here, a terminating completion will result at the completion of the dwell time.

Continuous Completion (Code 2)

With continuous completion, the position with the same number as this positioning sequence is executed. When the target position is reached, the target speed changes to the target speed for the next positioning sequence (n+1), and the position with the same number as that positioning sequence is executed.

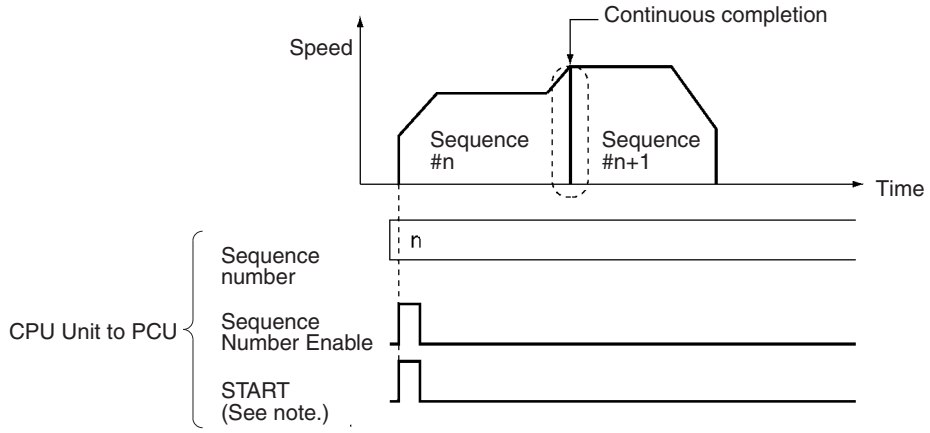

Note If INDEPENDENT START is executed, a terminating completion, and not a continuous completion, will result.

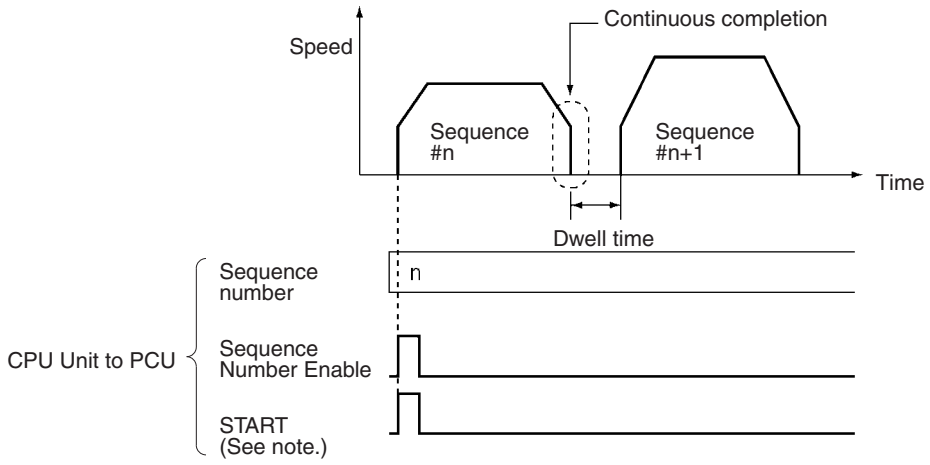

Note If a dwell time has been set, the position is executed and then there is a pause for the duration of the dwell time before the next positioning sequence (n+1) is executed.

Even if the completion code is continuous, operations can be executed in which the positioning direction is reversed. In that event, the positioning will be as follows regardless of the target speeds, absolute positions, or relative positions for the respective sequences.

If a dwell time (numbers 1 to 19) has been set, operation will be the same as that for automatic completion, not continuous completion.

Example

With sequence # n (continuous) and sequence # n+1 (bank end), there will be an immediate reversal when reversing from sequence # n to sequence # n+1, with no acceleration or deceleration.

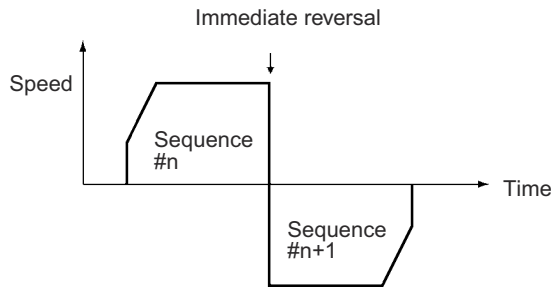

Bank End Completion (Code 3)

With bank end completion, the position with the same number as this positioning sequence is executed and then positioning is stopped. The next positioning sequence started is the one designated by the previous sequence number enable.

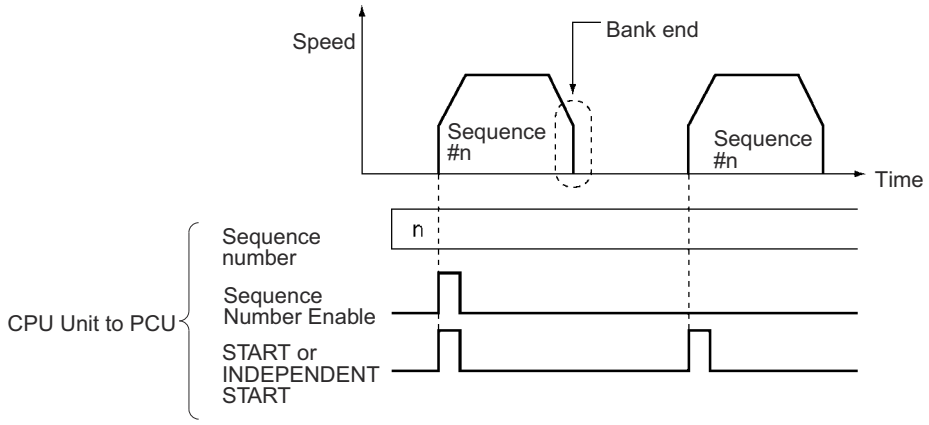

Speed Control Completion (Code 4)

With speed control completion, pulse output is supported at the target speed in this positioning sequence. The present position can be calculated even during continuous output. The direction of the pulse output is set by the sign for the position data of the same number. Therefore, depending on the desired direction, make the following settings for the position:

- For the CCW direction: FFFFFFFF Hex (–1) or any other negative value.
- For the CW direction: 00000000 Hex (0) or any other positive value.

To stop speed control, execute the STOP command.

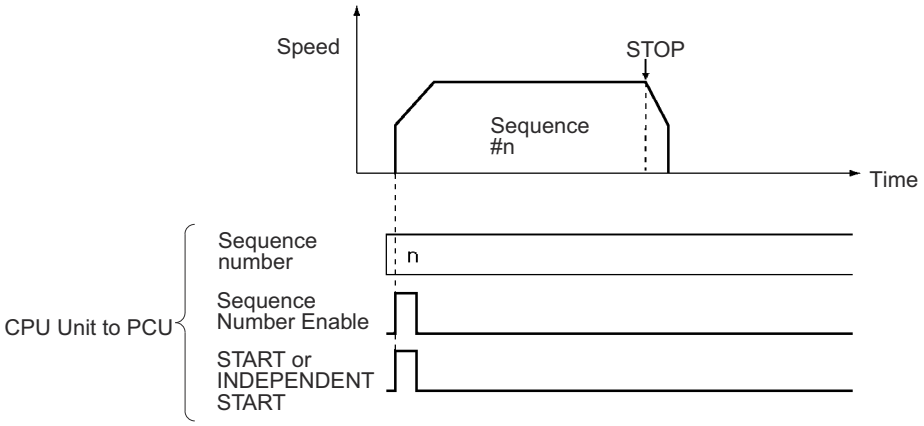

Interrupt Feeding Completion (Codes 5 and 6)

With interrupt feeding completion, pulse output is supported at the target speed in this positioning sequence. The present position can be calculated even during continuous output. The direction of the pulse output is set by the sign for the position data of the same number. When an interrupt signal is input, positioning is carried out according to the position data that is set. The positioning direction depends on the completion code. The next sequence (sequence number +1) will be executed when the next START or INDEPENDENT START command is received.

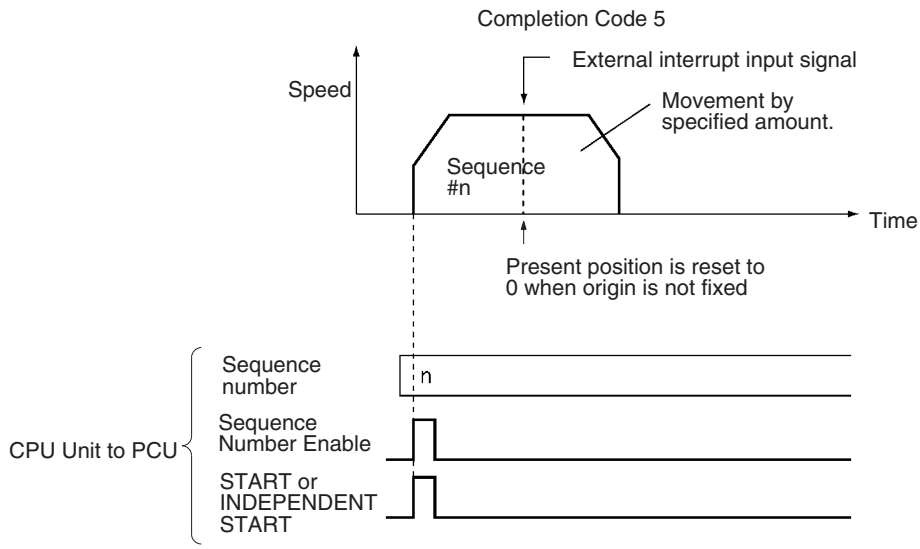

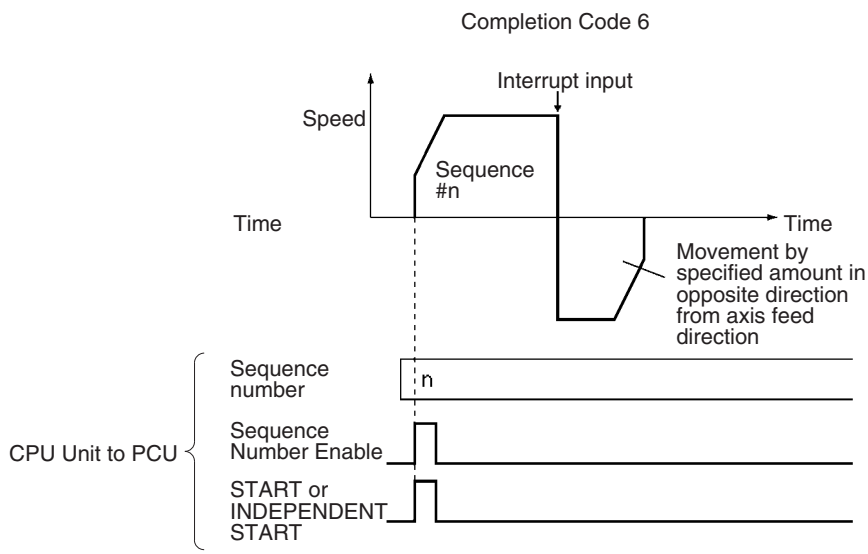

8-6 Linear Interpolation

Two or more axes can be designated for linear interpolation work. Use the axis designation in the positioning sequence to designate the axes for linear interpolation operations. The target speed set in the positioning sequence for the starting axis will become the interpolation speed.

For details regarding positioning sequence settings, refer to *8-4 Positioning Sequences*.

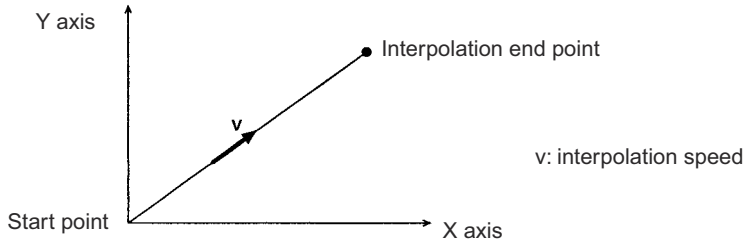

The speeds of the axes during linear interpolation are determined according to the following equations. (The same equations can also be applied for 2 or 3-axis operation.)

Example: Linear interpolation for simultaneous 4-axis operation

X-axis speed = Interpolation speed × Movement of X axis ÷ Total movement
Y-axis speed = Interpolation speed × Movement of Y axis ÷ Total movement
Z-axis speed = Interpolation speed × Movement of Z axis ÷ Total movement
U-axis speed = Interpolation speed × Movement of U axis ÷ Total movement

$$\text{Total movement} = \sqrt{(\text{Movement of X axis})^2 + (\text{Movement of Y axis})^2 + (\text{Movement of Z axis})^2 + (\text{Movement of U axis})^2}$$

When the interpolation speed is separated in the way shown above, if the speed for any axis is greater than its maximum speed setting, the interpolation speed is automatically lowered so that the speed for that axis (or axes) is equal to the maximum speed setting.

With this PCU, the interpolation speed can be set up to 1,000 pps so as to allow each axis to move simultaneously at its maximum speed (500 pps) whilst operating according to linear interpolation. If a value exceeding 1,000 pps is set, a speed error (error codes 1500 to 1599) will be generated.

The maximum distance the can be moved in one linear interpolation operation (i.e., for one sequence) is 2,147,483,520 (7FFFFFF80 Hex) pulses. If a linear interpolation operation that exceeds this value is specified, an overflow error (error code 8601) will be generated. For example, moving from the point (X, Y) = (–1073741823, 0) to the point (X, Y) = (1073741823, 1) would, using the above equations, entail moving a total distance of 2,147,483,647 (7FFFFFFF Hex) pulses. This value exceeds 2,147,483,520 and so if an operation to move between these 2 points using linear interpolation was specified, an overflow error (error code 8601) would be generated.

8-6-1 Using Continuous Completion with Linear Interpolation

When an axis is started with linear interpolation with the completion code set to continuous (completion code 2), the following points need to be observed.

Axis Designation Precautions

When executing linear interpolation with the completion code set to continuous (completion code 2), the axis designation must match the following sequence.

If a positioning sequence different from the designated axis is executed continuously (completion code 2), it is possible that all axes with interpolation will temporarily stop at an intermediate point. The stop period will be approximately 8 ms. There will be no acceleration/deceleration when there is a temporary stop at the intermediate point.

Example:

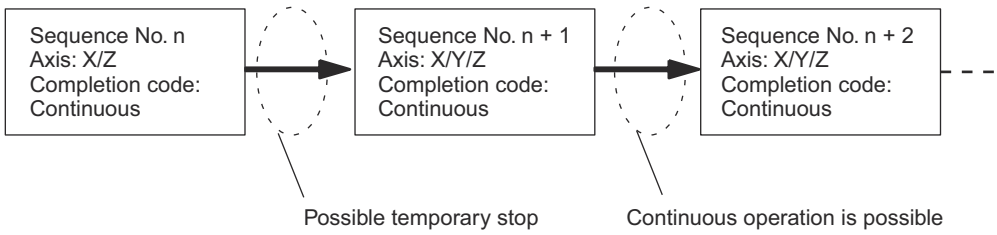

When Using a Stepping Motor

When using a stepping motor for continuous linear interpolation, use the automatic completion code (completion code 1). Interpolation is started with the target speed and acceleration/deceleration time of the active axis, so the pulses may suddenly become high or stop suddenly if the continuous completion code (completion code 2) is used. As a result, the motor may not be able to follow the variations in the pulses and may malfunction.

For example, suppose that a two-axis (axes X and Y) linear interpolation operation has been executed by starting the X axis. The movement on the Y axis from point A to point B will be 0.

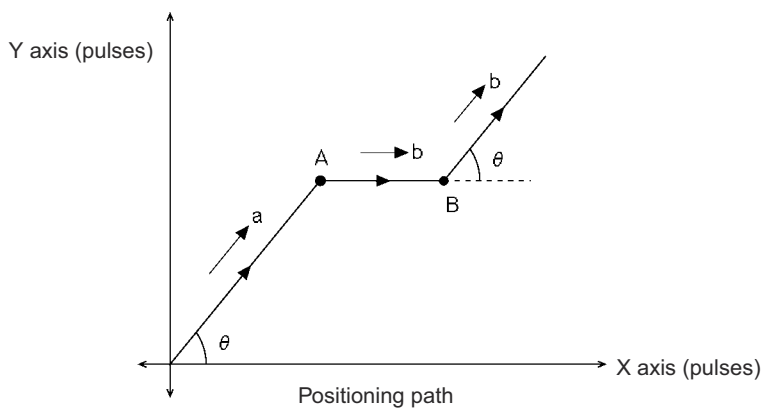

Now, suppose that the interpolation speed to point A is “a,” and the interpolation speed to point B and below is “b.” Then, when the completion code is continuous, the interpolation speed and the speeds of the X and Y axes are as

shown below, with the pulses being output suddenly and stopped suddenly.

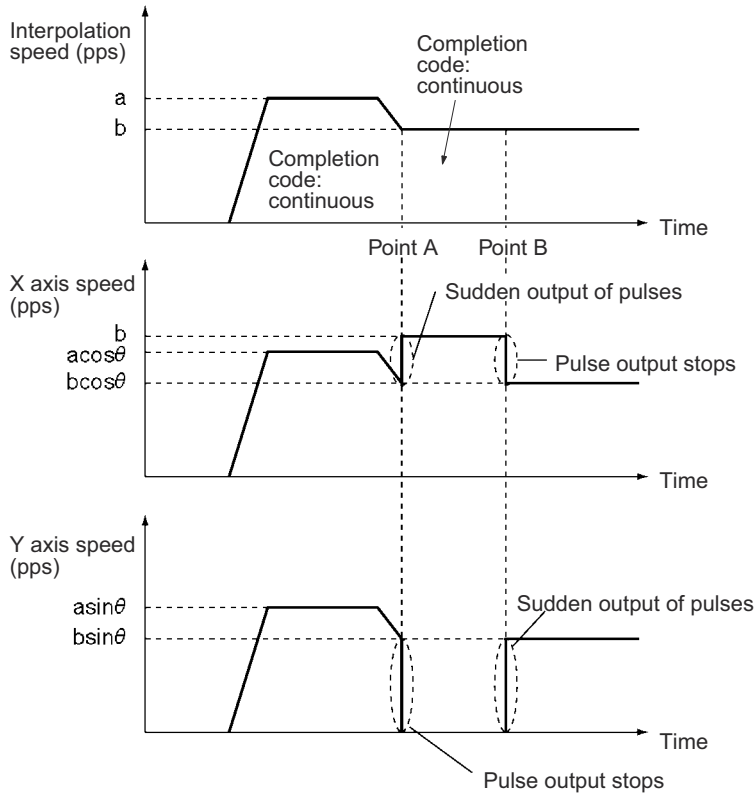

Reversal in Axis Operation

If an axis with interpolation reverses at the intermediate point when executing linear interpolation with the completion code set to continuous (completion code 2), all axes with interpolation will temporarily stop at the intermediate points. When reversing the operation direction of an axis, the same period of time will be taken for other axes with interpolation.

Acceleration/Deceleration will not occur for a temporary stop at intermediate points. When this operation is executed, therefore, set the completion code to automatic (completion code 1).

The following example shows the linear interpolation of the X and Y axes starting at the X axis. At point “A” the direction of movement at the Y axis is reversed.

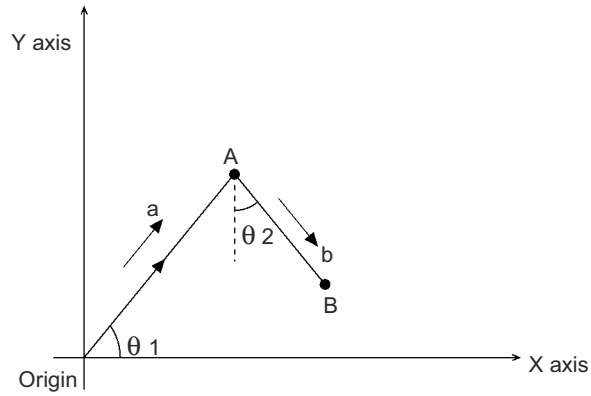

In this example the interpolation speed to point “A” is given as “a,” and the interpolation speed to point “B” is given as “b.” With a continuous completion code, the pulse output temporarily stops at point “A” as shown below. The stop time is approximately 8 ms.

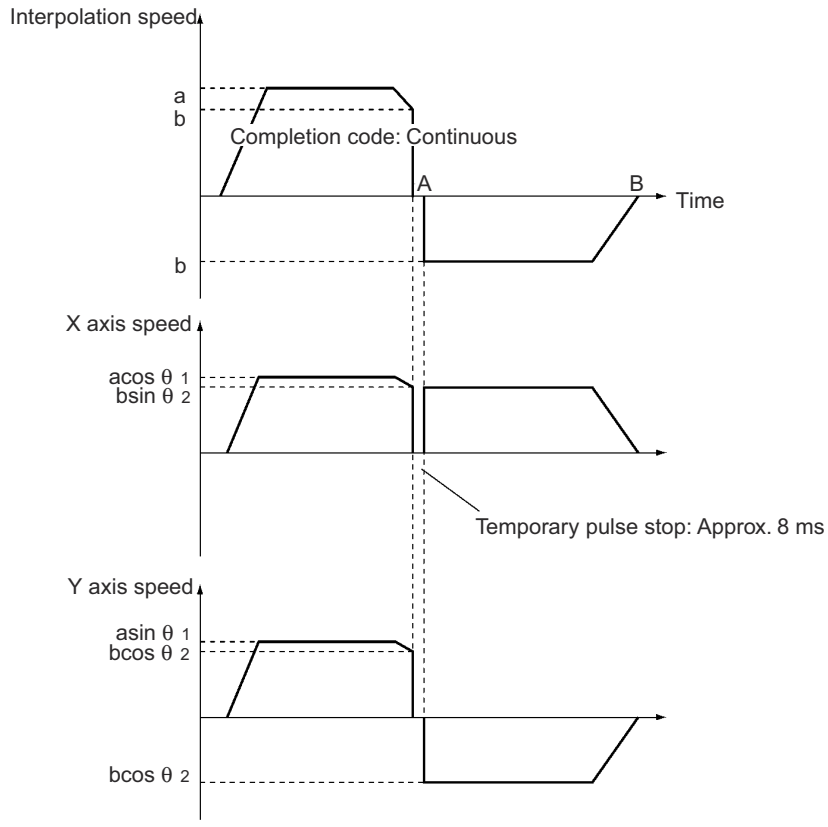

8-7 Transferring Positioning Sequences

When performing memory operation, it is necessary to write memory operation data (positioning sequences, speeds, positions, acceleration times, deceleration times, and dwell times) to the PCU's internal buffer (RAM) in advance. The data can be written to the PCU using either of the following methods.

- First, save the memory operation data to the PCU's flash memory using CX-Position, and then write this data from the flash memory at startup.
- Save the data to the DM or EM Area of the CPU Unit, and then, using the data transfer function, transfer this data to the PCU where it is written to the buffer.

A simple example of the procedure for transferring positioning sequences to the PCU using the second method is explained here. The same method can be used for data other than positioning sequences. For further details on transferring data, refer to *SECTION 5 Transferring and Saving Data*.

8-7-1 PCU's Internal Addresses

- When transferring data to the PCU, it is necessary to specify an internal PCU address.
- The PCU's internal addresses are shown in the following table. For details, refer to *5-1 Transferring and Saving Data*.

Address	NC1□3		NC2□3		NC4□3	
0004 to 0073	Axis parameters (1 axis)		Axis parameters (2 axes)		Axis parameters (4 axes)	
1000 to 112B	X axis data	Positioning sequences	X axis data	Positioning sequences	X axis data	Positioning sequences
112C to 11F3		Speeds		Speeds		Speeds
11F4 to 12BB		Positions		Positions		Positions
12BC to 12CF		Acceleration times		Acceleration times		Acceleration times
12D0 to 12E3		Deceleration times		Deceleration times		Deceleration times
12E4 to 12F7		Dwell times		Dwell times		Dwell times
12F8 to 1303		Zones		Zones		Zones
2000 to 212B	---		Y axis data	Positioning sequences	Y axis data	Positioning sequences
212C to 21F3	---			Speeds		Speeds
21F4 to 22BB	---			Positions		Positions
22BC to 22CF	---			Acceleration times		Acceleration times
22D0 to 22E3	---			Deceleration times		Deceleration times
22E4 to 22F7	---			Dwell times		Dwell times
22F8 to 2303	---			Zones		Zones
3000 to 312B	---		---		Z axis data	Positioning sequences
312C to 31F3	---		---			Speeds
31F4 to 32BB	---		---			Positions
32BC to 32CF	---		---			Acceleration times
32D0 to 32E3	---		---			Deceleration times
32E4 to 32F7	---		---			Dwell times
32F8 to 3303	---		---			Zones
4000 to 412B	---		---		U axis data	Positioning sequences
412C to 41F3	---		---			Speeds
41F4 to 42BB	---		---			Positions
42BC to 42CF	---		---			Acceleration times
42D0 to 42E3	---		---			Deceleration times
42E4 to 42F7	---		---			Dwell times
42F8 to 4303	---		---			Zones

8-7-2 Transferring 100 Positioning Sequences from the CPU Unit to the PCU

This example is based on the following conditions:

- The PCU used is an NC413 with the unit number set to 0.
- The beginning word of the operating data area is set to D00500.
- The data for sequence numbers 0 to 99 is set in EM bank 0 from word 0.

Ladder Program

The work bit R1 is used to start write.

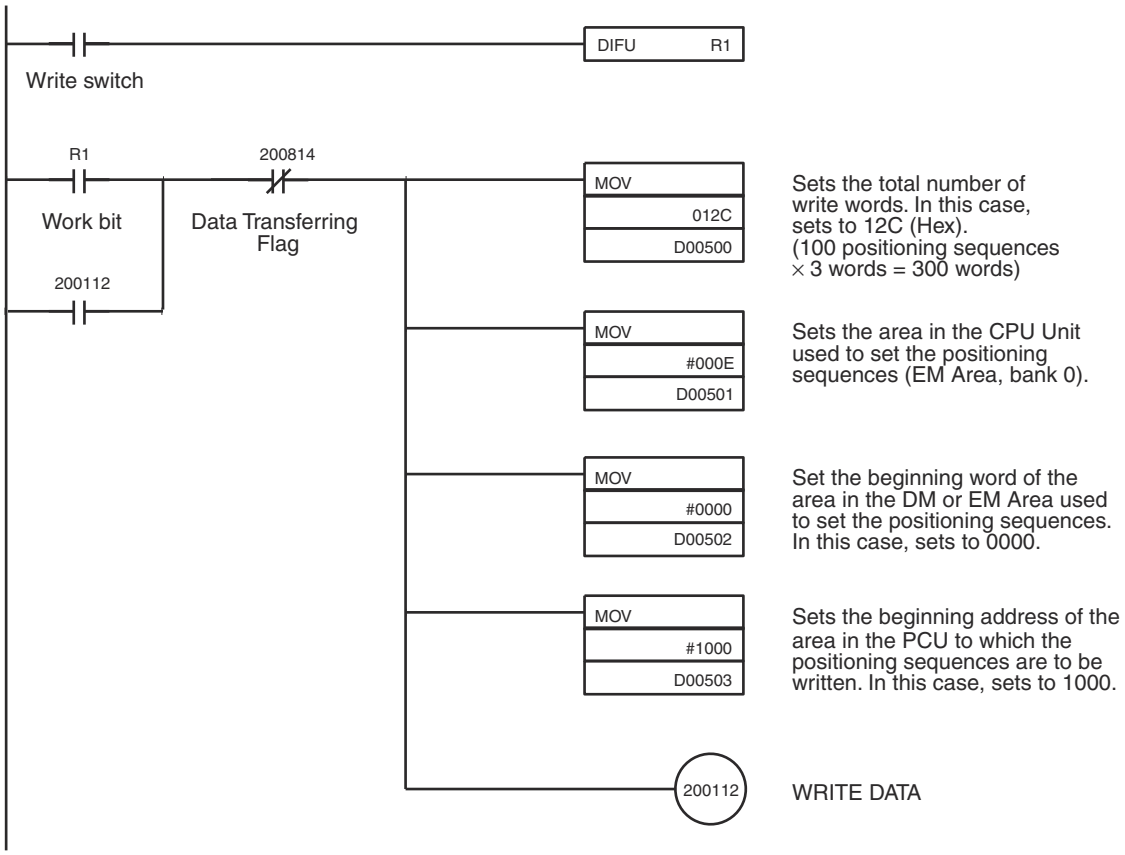

Operating data area

D00500	012C	← Number of write words
D00501	000E	← Write source area
D00502	0000	← Write source word
D00503	1000	← Write destination address

Positioning sequences (set in EM Area, bank 0)

E00000 E00001 E00002	Sequence #0 (3 words)
: E00297 E00298 E00299	: Sequence #99 (3 words)

8-8 Timing Chart for Memory Operation

This section provides timing charts showing START and INDEPENDENT START execution. The X axis is used as an example. It is first necessary to understand the functions of the Busy Flag and the Sequence Number Enable Bit.

8-8-1 Busy Flag

Turns ON while axes are outputting pulses. Turns OFF when execution is completed. No new start can be executed while the Busy Flag is ON.

Note In an absolute move command to the present position or a relative move command with position data of 0 is executed (i.e., when a linear movement is made with a travel distance of 0), the Busy Flag will be turned ON for one cycle at startup.

8-8-2 Sequence Number Enable Bit

The Sequence Number Enable Bit is used when designating the sequence number for starting operation. Execution begins from the specified sequence number when START or INDEPENDENT START is turned ON after a sequence number has been designated and the Sequence Number Enable Bit turned ON.

In the following timing chart the completion codes for the positioning sequences are as follows, using X-axis operation for a 4-axis PCU as an example:

Sequence #10, Sequence #20: Continuous
Sequence #11, Sequence #21: Bank end

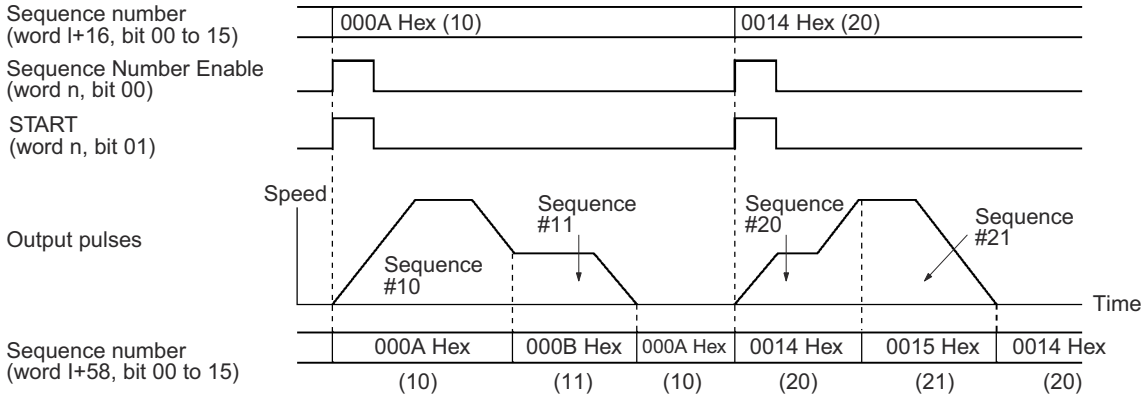

8-8-3 Timing Chart for INDEPENDENT START

INDEPENDENT START is used for stopping at each positioning sequence. An INDEPENDENT START operation is treated as a “terminating” positioning sequence, stopping after a single start regardless of the completion code. A bank end operation completion code, however, will still generate a bank end operation.

In the following timing chart the completion codes for the positioning sequences are as follows, using X-axis operation for a 4-axis PCU as an example:

Sequence #0, Sequence #10: Continuous
Sequence #1: Automatic
Sequence #11: Bank end

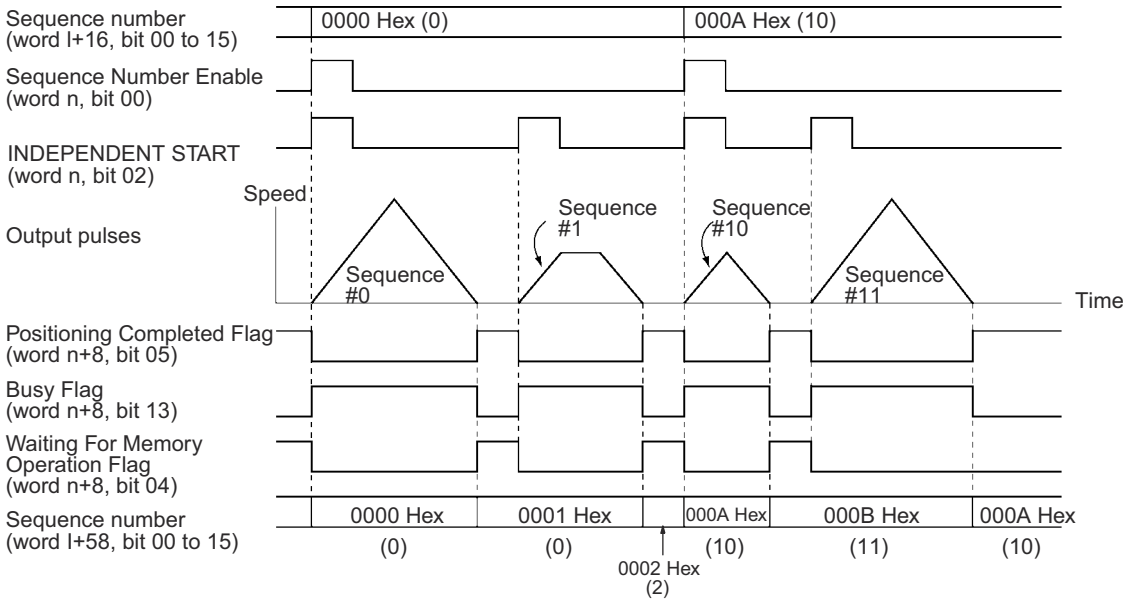

Note If the INDEPENDENT START Bit is turned from OFF to ON while the Sequence Number Enable Bit is OFF following a powerup or a restart, the sequence number error (error code 8101) will be generated.

When INDEPENDENT START is re-executed while the Sequence Number Enable Bit is OFF, the sequence numbers executed will be as follows:

Prior condition		INDEPENDENT START from OFF to ON when Sequence Number Enable Bit is OFF
Start	**Completion code**	
Independent start	Terminating Continuous Automatic	Previously executed sequence number +1
	Bank end	Sequence number when previous Sequence Number Enable is ON.
Start	Terminating	Previously executed sequence number +1
	Continuous Automatic	Will not stop when completion code is continuous or automatic.
	Bank end	Sequence number when previous Sequence Number Enable is ON.
Deceleration stop Input CW/CCW limit.		Re-executes interrupted sequence number

8-8-4 Timing Chart for START

START begins execution from any sequence number in accordance with the completion code set for each positioning sequence. When a sequence number with its completion code set to terminating or bank end is executed, pulse output stops when positioning is completed, and then waits for START.

In the following timing chart the completion codes for the positioning sequences are as follows, using X-axis operation for a 4-axis PCU as an example:

Sequence #0, Sequence #3: Continuous
Sequence #1: Terminating
Sequence #2: Automatic
Sequence #4: Bank end

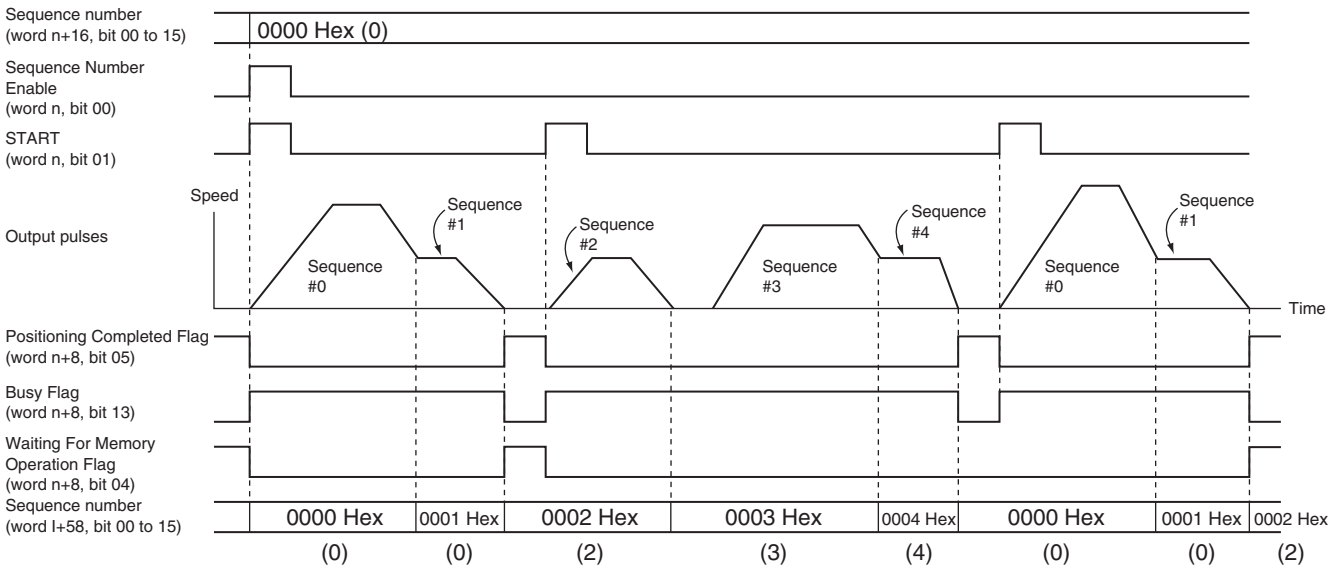

Note If START is turned from OFF to ON when the Sequence Number Enable Bit is OFF after a power-up or a restart, the sequence number error (error code 8101) will be generated.

When START is re-executed while the Sequence Number Enable Bit is OFF, the sequence numbers executed will be the same as those for INDEPENDENT START.

8-8-5 Timing of Data Changes during Memory Operation

It is possible to change positioning sequences and the data used in positioning sequences, such as speeds, positions, and acceleration times, during memory operation. When performing positioning with the completion code set to continuous, however, there will be a delay in the timing with which data changes are reflected in operation.

When positioning sequences with completion codes set to continuous are being executed continuously, the PCU reads up to 3 positioning sequences at the start of memory operation. This means that if changes to data for a positioning sequence are not made during execution of the positioning sequence at least 3 sequences before, these changes will not be reflected in operation.

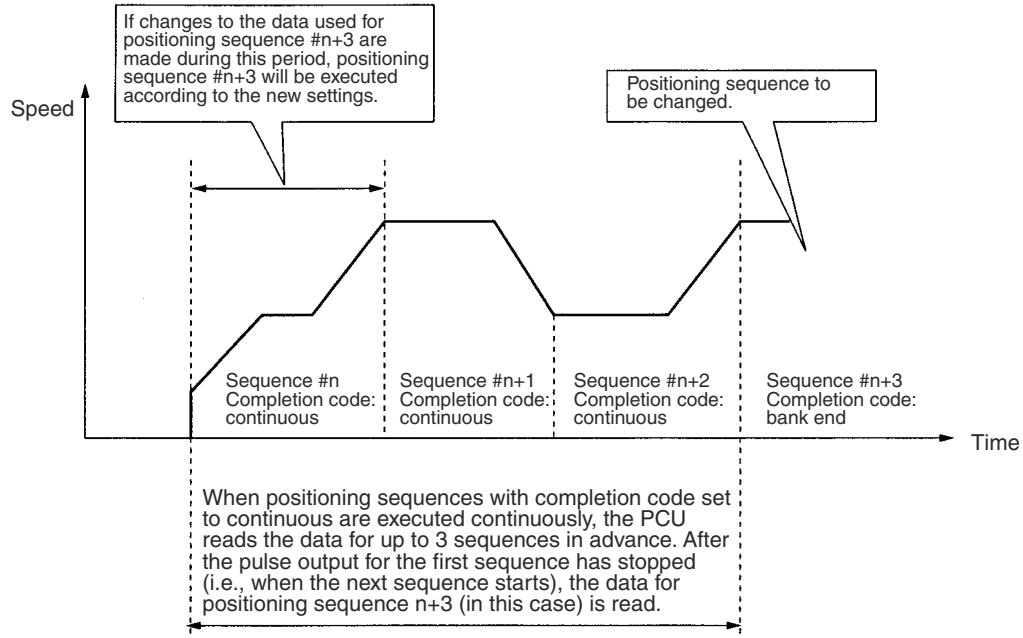

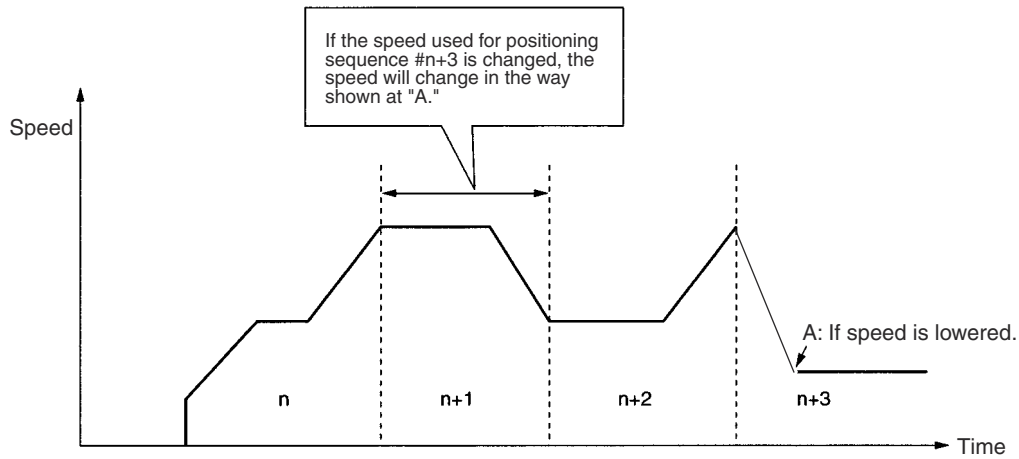

8-9 Acceleration/Deceleration

If the acceleration/deceleration time designation is set to 0 in sequence data used for memory operation, the acceleration time is the time it takes to reach the maximum speed from the initial speed (which is also set in the axis parameter area). Similarly, the deceleration time is the time it takes to go from the maximum speed to the initial speed. If the acceleration/deceleration time designation is set to 1, the acceleration or deceleration time is directly set as the time from the present speed to the target speed.

This section describes the acceleration/deceleration time when operation is performed using a speed command specified for memory operation with the acceleration/deceleration time designation set to 0.

8-9-1 Calculation of Basic Acceleration/Deceleration Times

The method for calculating actual acceleration and deceleration times when performing INDEPENDENT START operation or operation where the comple-

tion code of the positioning sequence is terminating, speed control, or interrupt feeding is given below.

The actual acceleration time T_1, and actual deceleration time T_2 are determined according to the following equations.

Actual acceleration time, $T_1 = (V_1 - V_0)/(V_{MAX} - V_0) \times Ta$

Actual deceleration time, $T_2 = (V_1 - V_0)/(V_{MAX} - V_0) \times Td$

- The following axis parameter settings are used:
  - Maximum speed, V_{MAX} (pps)
- The following data, specified by data number in the positioning sequence, is used:
  - Position
  - Initial speed, V_0 (pps)
  - Speed, V_1 (pps)
  - Acceleration time, Ta (ms)
  - Deceleration time, Td (ms)

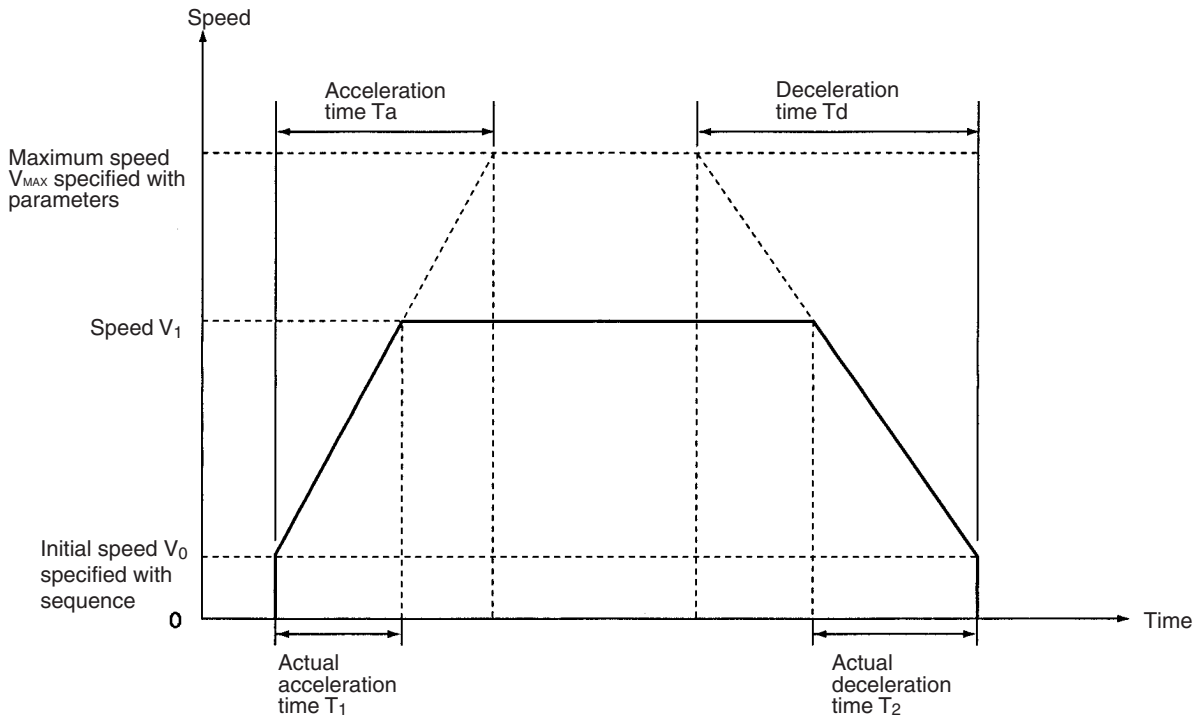

Note If override is enabled (i.e., the Override Enable Bit is ON), the speed will be as follows:
Speed designation = Positioning sequence's speed setting × Operating data area's override setting ÷ 100.

8-9-2 Calculation of Acceleration/Deceleration Times for Continuous Positioning

The method for calculating actual acceleration and deceleration times when performing continuous operation where the completion codes of the positioning sequences are set to continuous is given below.

As an example, the actual acceleration and deceleration times for positioning sequences 0 to 2 shown in the diagram below are calculated.

Actual acceleration time, $T_1 = (V_1 - V_0)/(V_{MAX} - V_0) \times Ta_1$
Actual acceleration time, $T_2 = (V_2 - V_1)/(V_{MAX} - V_0) \times Ta_1$
Actual deceleration time, $T_3 = (V_2 - V_3)/(V_{MAX} - V_0) \times Td_2$
Actual deceleration time, $T_4 = (V_3 - V_0)/(V_{MAX} - V_0) \times Td_3$

- The following axis parameter settings are used:
  - Maximum speed, V_{MAX} (pps)
- The following data, specified in each positioning sequence, is used:

No. 0

- Position
- Initial speed, V_0 (pps)
- Speed, V_1 (pps)
- Acceleration time, Ta_1 (ms)
- Deceleration time, Td_1 (ms)

No. 1

- Position
- Initial speed, V_0 (pps)
- Speed, V_2 (pps)
- Acceleration time, Ta_2 (ms)
- Deceleration time, Td_2 (ms)

No. 2

- Position
- Initial speed, V_0 (pps)
- Speed, V_3 (pps)
- Acceleration time, Ta_3 (ms)
- Deceleration time, Td_3 (ms)

As can be seen from the equations above, the acceleration and deceleration time settings for the current sequence are used until the next sequence starts.

If the speed for the next sequence is faster, the acceleration time is used, and if the speed for the next sequence is slower, the deceleration time is used.

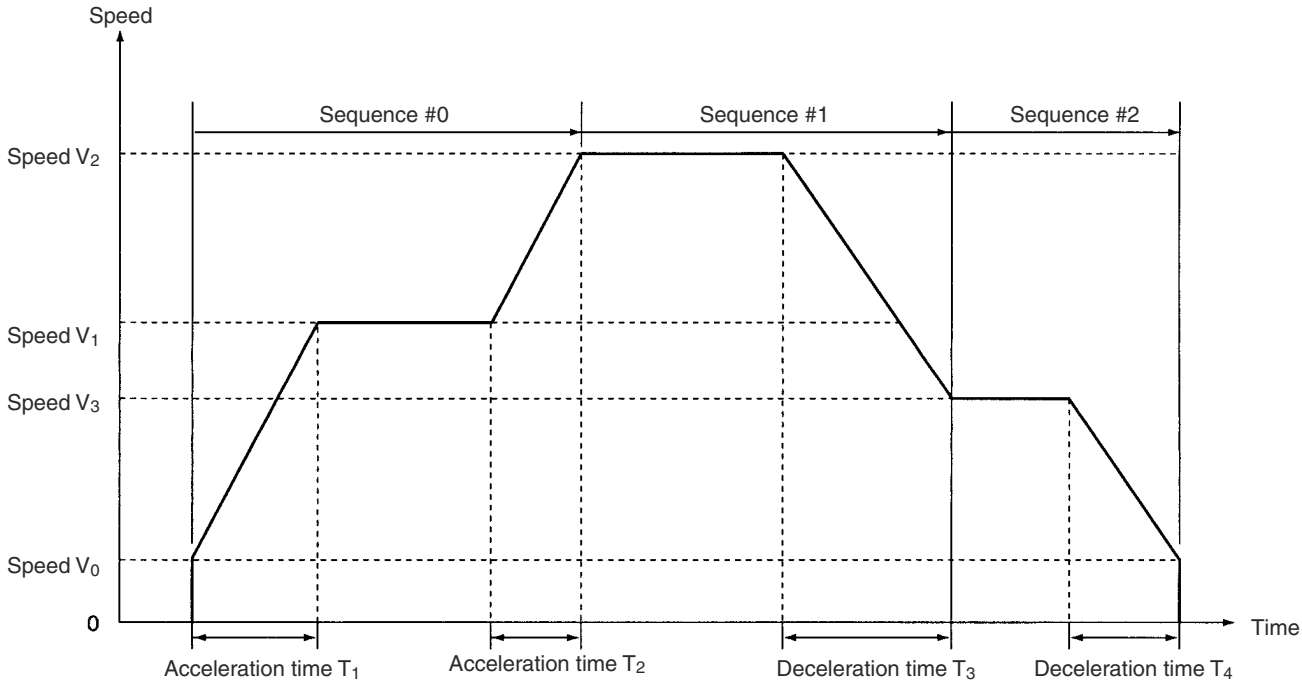

8-10 Sample Program

This section provides a sample program for starting the X axis. The PCU used is an NC113.

8-10-1 Operation

Positioning is executed as shown in the following diagram.

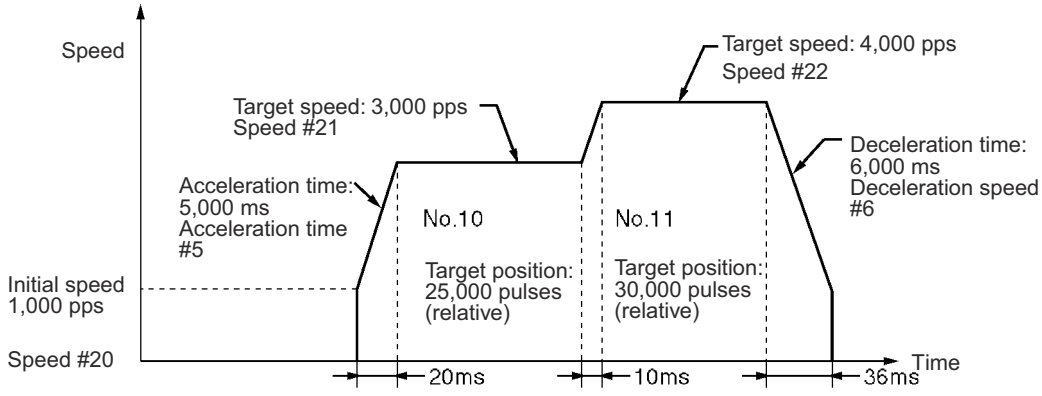

The values set for the acceleration and deceleration times and the actual acceleration and deceleration times are related to the values set for actual target speeds and the maximum speeds in the axis parameter area. For details, refer to *Appendix B Estimating Times and Pulses for Acceleration/Deceleration*.

Details of Positioning Sequences

Data	Settings	
	Sequence #10	Sequence #11
Axis designation	1 (X axis)	1 (X axis)
Output code	0	0
Position designation	1 (X axis, relative positioning)	1 (X axis, relative positioning)
Completion code	2 (Continuous)	3 (Bank end)
Dwell time number	00	00
Acceleration time number	5	5
Deceleration time number	6	6
Initial speed number	14	14
Target speed number	15	16

8-10-2 Conditions and Details of Settings

The following table shows the settings under various conditions.

Item		Details
Unit number of PCU		Unit 1: Common parameter area: D20100 to D20102 Operating memory area: CIO 2010 to CIO 2014 (words) (The above areas are allocated automatically according to the unit number set.)
Common parameters	Operating data area designation	D20100 | 0 | 0 | 0 | D | - - - DM Area
	Beginning word of operating data area	D20101 | 0 | 0 | C | 8 | - - - D00200
	Axis parameter designation	D20102 | 0 | E | 0 | 0 | - - - Use parameters saved in PCU. (Default settings used for Y, Z, and U axes.)

8-10-3 Setting Data

Apart from the settings given below, the default settings should be used. When settings other than the default settings are used, operations may vary from those shown.

Refer to *SECTION 5 Transferring and Saving Data* for information on how to write data to the PCU.

Positioning Sequences

Data	Data configuration	Value set (Hex)	Address (Hex)
Sequence #10	15 12 11 08 07 04 03 00 Axis designation | Output code | Position designation | Completion code Dwell time number | Acceleration time number | Deceleration time number Initial speed number | Target speed number	1012 0056 1415	101E 101F 1020
Sequence #11		1013 0056 1416	1021 1022 1023

Speeds

Data	Data configuration	Setting (pps)	Value set (Hex)	Address (Hex)
Speed data #20	15 Leftmost 00 15 Rightmost 00 Speed data (pps) Unsigned 32-bit binary data Setting range: 1 to 7A120 Hex (1 to 500,000 pps)	1000	03E8 0000	1154 1155
Speed data #21		3000	0BB8 0000	1156 1157
Speed data #22		4000	0FA0 0000	1158 1159

Positions

Data	Data configuration	Setting (pulse)	Value set (Hex)	Address (Hex)
Position #10	15 Leftmost 00 15 Rightmost 00 Position data (pulses) Unsigned 32-bit binary data Setting range: C0000001 to 3FFFFFFF Hex (–1,073,741,823 to 1,073,741,823 pulses)	25000	61A8 0000	1208 1209
Position #11		30000	7530 0000	120A 120B

Acceleration/Deceleration Times

Data	Data configuration	Setting (ms)	Value set (Hex)	Address (Hex)
Acceleration time #5	15 Leftmost 00 15 Rightmost 00 Acceleration, deceleration time (ms) Unsigned 32-bit binary data Setting range: 0 to 3D090 Hex (ms) (0 to 250,000 ms)	5000	1388 0000	12C6 12C7
Deceleration time #6		6000	1770 0000	12DC 12DD

8-10-4 Program Example

W030 is used as a work bit.

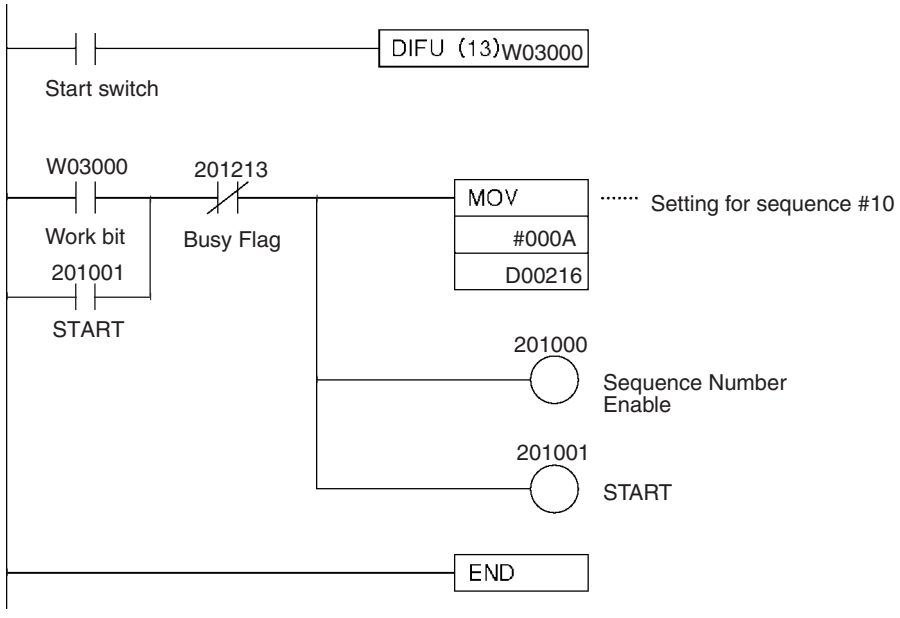

SECTION 9
Other Operations

This section describes the following operations: jogging, teaching, interrupt feeding, forced interrupt, deceleration stop, override, error counter reset output/origin-adjustment command output, backlash compensation, and software limits.

9-1 Jogging 231
9-1-1 Outline of Operation 231
9-1-2 Procedure for Executing JOG 231
9-1-3 Beginning Words of Operating Memory Area, Operating Data Area, and Parameter Areas 231
9-1-4 Operating Memory Area Allocation and Operating Data Area Settings 231
9-1-5 Timing Chart 232
9-2 Teaching 233
9-2-1 Outline of Operation 233
9-2-2 Procedure for Teaching 233
9-2-3 Beginning Words of Operating Memory Area, Operating Data Area, and Parameter Areas 233
9-2-4 Operating Memory Area Allocation and Operating Data Area Settings 234
9-2-5 Timing Chart 234
9-3 Interrupt Feeding 235
9-3-1 Outline of Operation 235
9-3-2 Procedure for Memory Operation 235
9-3-3 Procedure for Direct Operation 236
9-3-4 Beginning Words of Operating Memory Area, Operating Data Area, and Parameter Areas 236
9-3-5 Operating Memory Area Allocation and Operating Data Area Settings 236
9-3-6 Timing Chart 237
9-4 Forced Interrupt 238
9-4-1 Beginning Words of Operating Memory Area, Operating Data Area, and Parameter Areas 239
9-4-2 Operating Memory Area Allocation and Operating Data Area Settings 239
9-4-3 Timing Chart 240
9-5 Deceleration Stop 240
9-5-1 Outline of Operation 240
9-5-2 Beginning Words of Operating Memory Area, Operating Data Area, and Parameter Areas 242
9-5-3 Operating Memory Area Allocation 242
9-5-4 Deceleration Stop During Positioning 243
9-5-5 Timing Chart 245
9-6 Override 246
9-6-1 Outline of Operation 246
9-6-2 Beginning Words of Operating Memory Area, Operating Data Area, and Parameter Areas 247
9-6-3 Operating Memory Area Allocation and Operating Data Area Settings 248
9-6-4 Timing Chart 248

9-7 Error Counter Reset Output and Origin Adjustment Command Output 249
9-7-1 Outline of Operation 249
9-7-2 Beginning Words of Operating Memory Area, Operating Data Area, and Parameter Areas 249
9-7-3 Operating Memory Area Allocation and External I/O Connector Pin Arrangement 250
9-7-4 Timing Chart 250
9-8 Backlash Compensation. 252
9-8-1 Outline of Operation 252
9-8-2 Beginning Words of Operating Memory Area, Operating Data Area, and Parameter Areas 253
9-8-3 Setting Axis Parameters 253
9-8-4 Backlash Compensation Operation 253
9-8-5 Backlash Compensation With Linear Interpolation 254
9-9 Software Limit 254
9-9-1 Outline 254
9-9-2 Beginning Words of Operating Memory Area, Operating Data Area, and Parameter Areas 255
9-9-3 Setting Axis Parameters 256
9-9-4 Operation Timing 256
9-10 Stop Function. 257
9-10-1 Outline 257
9-10-2 Stop Methods. 258
9-11 Easy Backup Function (Ver. 2.0 or later). 258
9-11-1 Introduction 258
9-11-2 Applications 259
9-11-3 Operating Procedures 260

9-1 Jogging

This section describes the JOG operation and the data needed for performing it.

9-1-1 Outline of Operation

While JOG is ON, axis operation is started using the designated direction, speed, and acceleration time. When it is turned OFF, positioning decelerates with the designated deceleration time and then stops. The JOG operation can be executed even when the origin has not been established.

9-1-2 Procedure for Executing JOG

1,2,3...

1. Set the operating data area using the parameters.
2. Set the speed and acceleration/deceleration times in the operating data area.
3. Designate the start direction in the operating memory area.
4. Turn ON the JOG Bit. If the initial speed is set in the parameters, it will be in effect.

9-1-3 Beginning Words of Operating Memory Area, Operating Data Area, and Parameter Areas

The beginning words of the operating memory area, operating data area, and common parameter area used for a Position Control Unit (PCU) are determined (or set) according to the following.

- Beginning word of the operating memory area, n = CIO 2000 + 10 × unit number
- Beginning word of the common parameter area, m = D20000 + 100 × unit number
- Beginning word of the operating data area, l, is specified in m and m+1.

Set the beginning words of the operating data area and designate the axis parameters used with the common parameters as shown below.

Word	Name	Bit	Reference
m	Operating data area designation	00 to 15	*SECTION 4*
m+1	Beginning word of operating data area	00 to 15	
m+2	Axis parameter designation	00 to 15	

9-1-4 Operating Memory Area Allocation and Operating Data Area Settings

Operating Memory Area

Name	Model	Operating memory area				Bit	Details
		X axis	Y axis	Z axis	U axis		
JOG	NC4□3	n	n+2	n+4	n+6	09	1: Execute JOG; 0: Stop
Direction designation	NC2□3	n	n+2			10	1: CCW direction; 0: CW direction
	NC1□3	n					
Busy Flag	NC4□3	n+8	n+11	n+14	n+17	13	1: Busy
	NC2□3	n+4	n+7				
	NC1□3	n+2					

If the software limit has been disabled (CW limit equal to or less than CCW limit) by the axis parameters, even if JOG is executed with the origin established, the result will be the same as if the origin were not established. The present position becomes “0” when operation starts.

Operating Data Area

Name	Model	Operating data area				Bit	Details
		X axis	Y axis	Z axis	U axis		
Speed	NC4□3 NC2□3 NC1□3	I+10 I+11 I+10 I+11 I+10 I+11	I+22 I+23 I+22 I+23	I+34 I+35	I+46 I+47	00 to 15 (rightmost) 00 to 15 (leftmost)	15 Leftmost 00 15 Rightmost 00 Setting range: 1 to 7A120 Hex (1 to 500,000 pps)
Acceleration time	NC4□3 NC2□3 NC1□3	I+12 I+13 I+12 I+13 I+12 I+13	I+24 I+25 I+24 I+25	I+36 I+37	I+48 I+49	00 to 15 (rightmost) 00 to 15 (leftmost)	15 Leftmost 00 15 Rightmost 00 Setting range: 0 to 3D090 Hex (0 to 250,000 ms)
Deceleration time	NC4□3 NC2□3 NC1□3	I+14 I+15 I+14 I+15 I+14 I+15	I+26 I+27 I+26 I+27	I+38 I+39	I+50 I+51	00 to 15 (rightmost) 00 to 15 (leftmost)	

If speed is changed during a JOG operation the operation will be carried out using the changed data. If the acceleration/deceleration time is changed, the changes will be effective with the next JOG command.

If the acceleration/deceleration time is changed with Ver. 2.0 or later, operations are performed using the new values. The acceleration/deceleration speed can also be changed during acceleration/deceleration to a specified speed, except when decelerating for a JOG stop or deceleration stop.

9-1-5 Timing Chart

The following is an example of a timing chart for a JOG operation on the X axis with a 4-axis PCU.

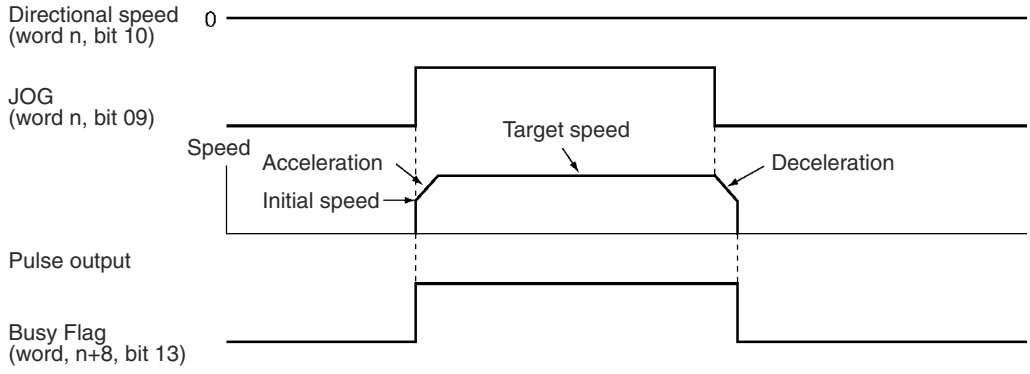

9-2 Teaching

This section describes the teaching operation and the data needed for performing it.

9-2-1 Outline of Operation

The present position is taken as the designated position number (teaching address). The position data is taken in when TEACH is turned ON.

Note Before executing TEACH, first establish the origin. If the origin is not first established, a present position unknown error (error code 5040) will be generated.

When TEACH is executed, values will be written in the position data area in the internal memory of the PCU. Since this data will be erased when the power is turned OFF or when the PCU is restarted, perform data saving operation to preserve the data. Refer to *5-6 Saving Data*.

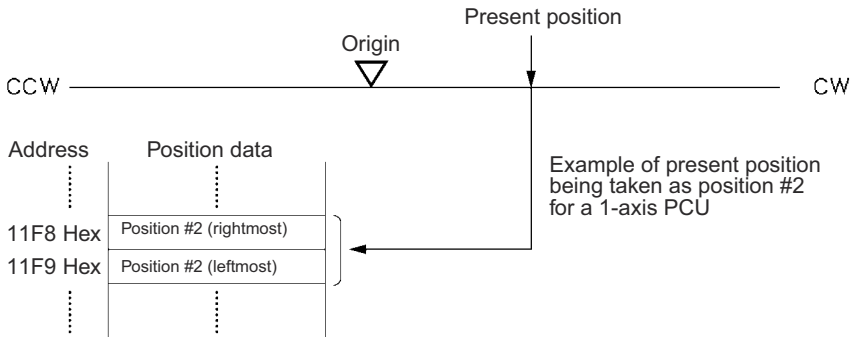

⚠ **Caution** When positioning to a position determined using the teaching function, set the position designation setting in the positioning sequence to absolute positioning. If it is set to relative positioning, positioning will be performed to a position other than the one obtained with the teaching function.

9-2-2 Procedure for Teaching

1,2,3...

1. Set the operating data area using the parameters.
2. Move the axis to the teaching position (e.g., using JOG).
3. Set the teaching address in the operating data area.
4. Stop the axis, and then turn the TEACH Bit from OFF to ON.

9-2-3 Beginning Words of Operating Memory Area, Operating Data Area, and Parameter Areas

The beginning words of the operating memory area, operating data area, and common parameter area used for a Position Control Unit (PCU) are determined (or set) according to the following.

- Beginning word of the operating memory area, n = CIO 2000 + 10 × unit number
- Beginning word of the common parameter area, m = D20000 + 100 × unit number
- Beginning word of the operating data area, l, is specified in m and m+1.

Set the beginning words of the operating data area and designate the axis parameters used with the common parameters as shown below.

Word	Name	Bit	Reference
m	Operating data area designation	00 to 15	*SECTION 4*
m+1	Beginning word of operating data area	00 to 15	
m+2	Axis parameter designation	00 to 15	

9-2-4 Operating Memory Area Allocation and Operating Data Area Settings

Operating Memory Area

Name	Model	Operating memory area				Bit	Details
		X axis	Y axis	Z axis	U axis		
TEACH	NC4□3 NC2□3 NC1□3	n n n	n+2 n+2	n+4	n+6	11	↑ : Start of teaching
Teaching completed	NC4□3 NC2□3 NC1□3	n+8 n+4 n+2	n+11 n+7	n+14	n+17	11	↑ : Teaching completed ↓ : At start
Busy Flag						13	1: Busy

Operating Data Area

Name	Model	Operating memory area				Bit	Details
		X axis	Z axis	Y axis	U axis		
Teaching address	NC4□3 NC2□3 NC13	I+18 I+18 I+18	I+30 I+30	I+42	I+54	00 to 15	15 00 Teaching address Specify a position #00 to #99 in hexadecimal. (0000 to 0063 Hex).

9-2-5 Timing Chart

The following timing chart shows an example of teaching on the X axis for a 4-axis PCU, taking the present position as position #2.

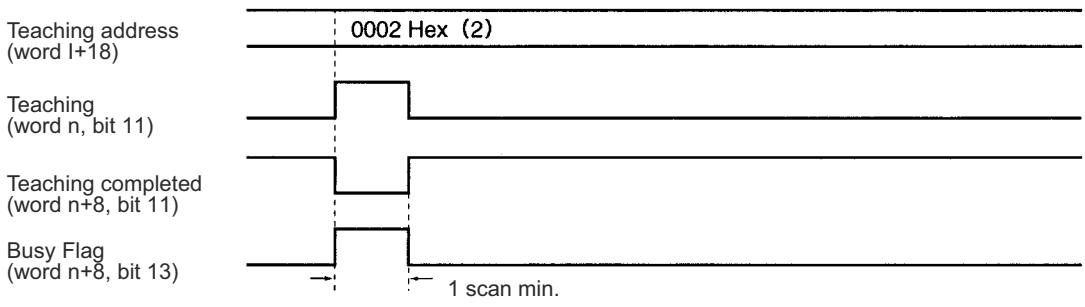

9-3 Interrupt Feeding

This section describes the interrupt feeding operation and the data needed for performing it.

9-3-1 Outline of Operation

Interrupt feeding is a positioning operation that moves the axis by a specified amount from the position at which the external interrupt signal was input, either in the same direction as the direction of travel or in the opposite direction. It can be started either from memory operation or from direct operation. The present position will be set to “0” if an interrupt input signal is input when the origin is not fixed.

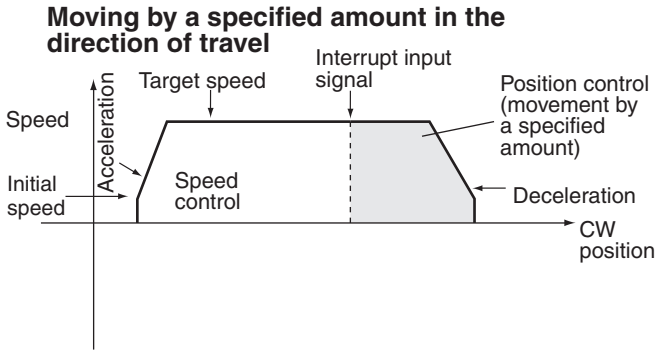

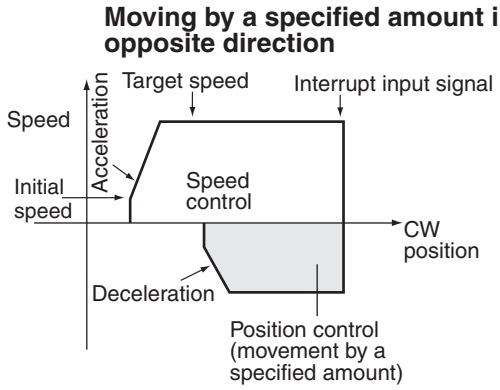

Note There will be no acceleration or deceleration if there is a reversal as a result of an interrupt input signal for a movement opposite to the direction of travel.

The initial speed when operation is started using memory operation is determined by the settings in the sequence data. The initial speed when operation is started using direct operation is determined by the settings in the axis parameters.

9-3-2 Procedure for Memory Operation

With memory operation, the positioning sequence completion code is set to interrupt feeding (5 or 6) and then this sequence number is started and the interrupt input signal is awaited.

1,2,3...

1. Set the positioning sequence completion code to 5 (interrupt feeding in direction of travel) or 6 (interrupt feeding in opposite direction) and write it to the PCU.
2. In the positioning sequence, set the speed data number and acceleration/deceleration time number, and set the amount of movement for the interrupt feeding in the position with the same number as the positioning sequence. The sign for the position will then become the pulse direction for speed control. The direction will become CW if it is positive and CCW if it is negative.
3. Execute START or INDEPENDENT START for the sequence number set in (1) above.
4. When an interrupt signal is input externally, interrupt feeding will be executed.

9-3-3 Procedure for Direct Operation

When the Interrupt Feeding Bit is turned ON, positioning is started with speed control and an interrupt input signal is awaited.

1,2,3...

1. Set the operating data area using the parameters.
2. Set the amount of interrupt feeding movement (position, speed, acceleration/deceleration time number) in the operating data area. The sign of the position at this point becomes the direction of travel after the input of the interrupt signal. "+" means interrupt feeding in the direction of travel, while "–" means interrupt feeding in the opposite direction.
3. Set the direction of the speed control with the direction designation, and then turn the Interrupt Feeding Bit from OFF to ON.
4. When the external interrupt signal is input, interrupt feeding will be executed.

9-3-4 Beginning Words of Operating Memory Area, Operating Data Area, and Parameter Areas

The beginning words of the operating memory area, operating data area, and common parameter area used for a Position Control Unit (PCU) are determined (or set) according to the following.

- Beginning word of the operating memory area, n = CIO 2000 + 10 × unit number
- Beginning word of the common parameter area, m = D20000 + 100 × unit number
- Beginning word of the operating data area, l, is specified in m and m+1.

Set the beginning words of the operating data area and designate the axis parameters used with the common parameters as shown below.

Word	Name	Bit	Reference
m	Operating data area designation	00 to 15	*SECTION 4*
m+1	Beginning word of operating data area	00 to 15	
m+2	Axis parameter designation	00 to 15	

9-3-5 Operating Memory Area Allocation and Operating Data Area Settings

For details regarding positioning sequences in memory operation, see *8-4 Positioning Sequences*. Refer to *SECTION 8 Memory Operation* for how to set and execute the operating data area and operating memory area when the program has been started from memory operation.

Operating Memory Area

Name	Model	Operating memory area				Bit	Details
		X axis	Y axis	Z axis	U axis		
Interrupt feeding	NC4□3 NC2□3 NC1□3	n n n	n+2 n+2	n+4	n+6	05	↑ : Start of interrupt feeding
Direction designation						10	1: CCW; 0: CW
Positioning Completed Flag	NC4□3 NC2□3 NC1□3	n+8 n+4 n+2	n+11 n+7	n+14	n+17	05	↑ : Positioning completed
Busy Flag						13	1: Busy

Operating Data Area

Name	Model	Operating data area				Bit	Details
		X axis	Y axis	Z axis	U axis		
Position	NC4□3 NC2□3 NC1□3	I+8 I+9 I+8 I+9 I+8 I+9	I+20 I+21 I+20 I+21	I+32 I+33	I+45 I+45	00 to 15 (rightmost) 00 to 15 (leftmost)	15 Leftmost 00 15 Rightmost 00 Setting range: C0000001 to 3FFFFFFF Hex (–1,073,741,823 to 1,073,741,823)
Speed	NC4□3 NC2□3 NC1□3	I+10 I+11 I+10 I+11 I+10 I+11	I+22 I+23 I+22 I+23	I+34 I+35	I+46 I+47	00 to 15 (rightmost) 00 to 15 (leftmost)	15 Leftmost 00 15 Rightmost 00 Setting range: 1 to 7A120 Hex (1 to 500,000 pps)
Acceleration time	NC4□3 NC2□3 NC1□3	I+12 I+13 I+12 I+13 I+12 I+13	I+24 I+25 I+24 I+25	I+36 I+37	I+48 I+49	00 to 15 (rightmost) 00 to 15 (leftmost)	15 Leftmost 00 15 Rightmost 00 Setting range: 0 to 3D090 Hex (0 to 250,000 ms)
Deceleration time	NC4□3 NC2□3 NC1□3	I+14 I+15 I+14 I+15 I+14 I+15	I+26 I+27 I+26 I+27	I+38 I+39	I+50 I+51	00 to 15 (rightmost) 00 to 15 (leftmost)	

If the speed is changed before the interrupt signal is input, the operation will be performed using the new speed. However, changes in the acceleration/deceleration times will be effective from the next interrupt feed. The acceleration/deceleration times set for the first start will be used whenever there is a speed change. The deceleration time set for the first start will be used after an interrupt signal is input.

(With Ver. 2.0 or later, if the acceleration/deceleration times are changed before the interrupt signal is input, the operation will be performed using the new times. The times can be changed regardless of changes in speed. The deceleration time set when the interrupt signal is input will be used after the interrupt input.)

9-3-6 Timing Chart

The following timing chart illustrates interrupt feeding under direct operation, using the X axis for a 4-axis PCU as an example. There is a movement of 10,000 pulses in the direction of travel.

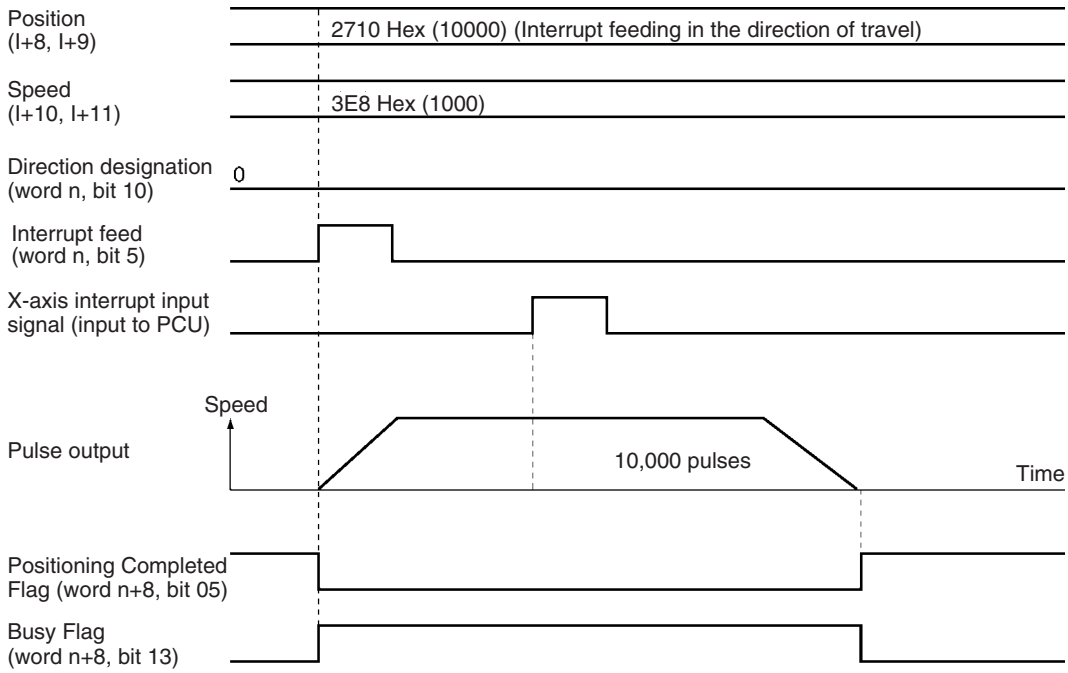

9-4 Forced Interrupt

FORCED INTERRUPT is a command which is only enabled during memory operation. It is used for taking emergency evasive action from the current operation under memory operation.

Outline of Operation

When a sequence number with the forced interrupt operation set is specified and the FORCED INTERRUPT Bit is turned ON, the pulse output of the memory operation currently being executed is stopped (without deceleration) and positioning is executed from the specified sequence number. There is no need to turn ON the Sequence Number Enable Bit.

The forced interrupt operation will depend on the startup method at the time of the interrupt. For operation started with INDEPENDENT START, operation will follow terminating completion. For any other kind of startup method, operation will be determined by the completion code in the positioning sequence.

Note A sequence number error (error code 8101) will be generated in the following cases.

- If forced interrupt is executed at power up or restart, or after execution of origin search, origin return, or present position preset.
- If forced interrupt is executed at bank end.

Procedure for Using Forced Interrupt

1,2,3...

1. Set the forced interrupt action in the positioning sequence and transfer it to the PCU.
2. When a forced interrupt is required, specify the sequence number set in (1) and FORCED INTERRUPT from OFF to ON.

9-4-1 Beginning Words of Operating Memory Area, Operating Data Area, and Parameter Areas

The beginning words of the operating memory area, operating data area, and common parameter area used for a Position Control Unit (PCU) are determined (or set) according to the following.

- Beginning word of the operating memory area, n = CIO 2000 + 10 × unit number
- Beginning word of the common parameter area, m = D20000 + 100 × unit number
- Beginning word of the operating data area, l, is specified in m and m+1.

Set the beginning words of the operating data area and designate the axis parameters used with the common parameters as shown below.

Word	Name	Bit	Reference
m	Operating data area designation	00 to 15	*SECTION 4*
m+1	Beginning word of operating data area	00 to 15	
m+2	Axis parameter designation	00 to 15	

9-4-2 Operating Memory Area Allocation and Operating Data Area Settings

Refer to *8-4 Positioning Sequences* for information about positioning sequences under memory operation.

Operating Memory Area

Name	Model	Operating memory area				Bit	Details
		X axis	Y axis	Z axis	U axis		
FORCED INTERRUPT	NC4□3 NC2□3 NC1□3	n+1 n+1 n+1	n+3 n+3	n+5	n+7	08	↑ : FORCED INTERRUPT execution
Busy Flag	NC4□3 NC2□3 NC1□3	n+8 n+4 n+2	n+11 n+7	n+14	n+17	13	1: Busy

Operating Data Area

Name	Model	Operating memory area				Bit	Details
		X axis	Y axis	Z axis	U axis		
Positioning sequence	NC4□3 NC2□3 NC1□3	l+16 l+16 l+16	l+28 l+28	l+40	l+52	00 to 15	15 00 Positioning sequence Specify the number of the positioning sequence to be executed by the forced interrupt in the range 0000 to 0063 Hex (00 to 99).

9-4-3 Timing Chart

In the following timing chart, the completion codes for the various positioning sequence are as shown below, using X-axis operation for a 4-axis PCU as an example.

Sequence #10 and Sequence #20: Continuous
Sequence #11 and Sequence #21: Bank end
The example shows how to execute a forced interrupt for sequence #20 while sequences #10 to #11 are being executed.

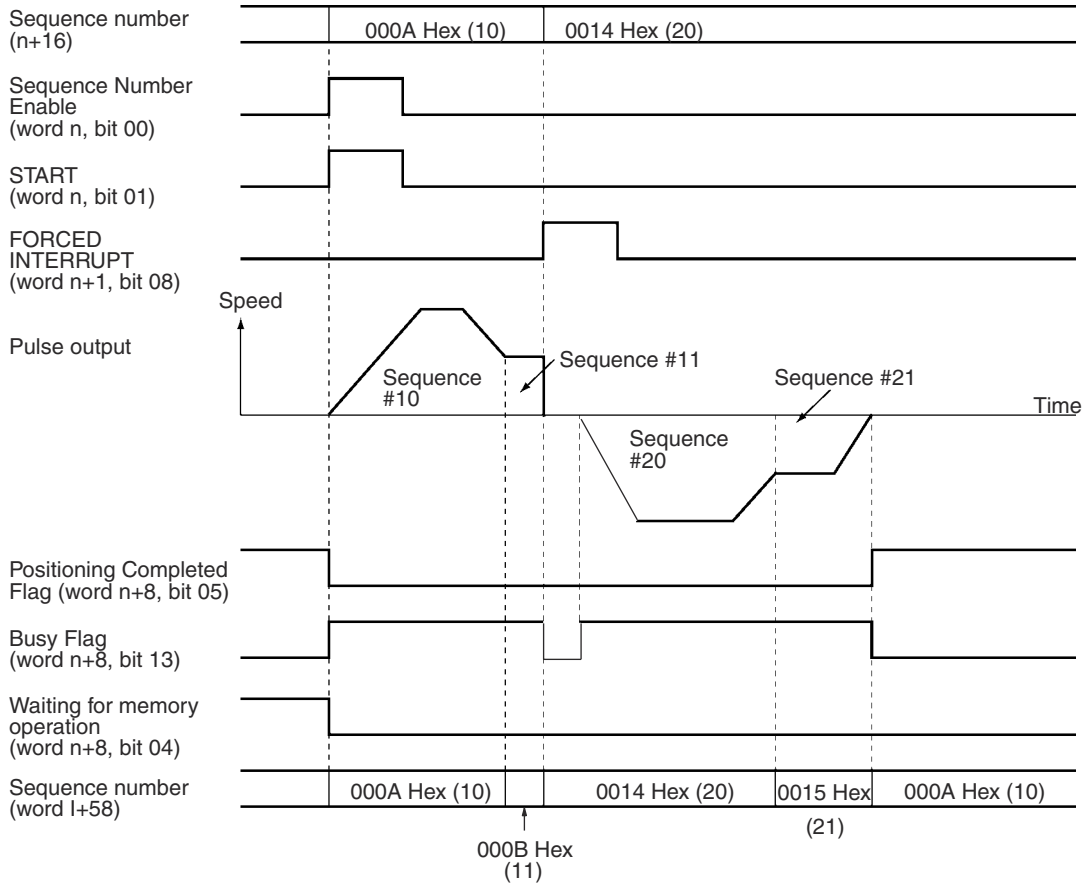

9-5 Deceleration Stop

The STOP command brings an active axis to a decelerated stop.

9-5-1 Outline of Operation

The deceleration stop operation is executed when the STOP Bit is turned ON. When a deceleration stop is executed during memory operation, the stop occurs with a deceleration time that can be calculated from the deceleration time set for the positioning sequence (see *8-9 Acceleration/Deceleration*). When a deceleration stop is executed at any other time, the stop occurs with a deceleration time that can be calculated from the deceleration time set in the operating memory area (see *7-6 Acceleration/Deceleration*).

The commands that cannot be used when the STOP Bit is ON are shown in the following table.

Command		Executable while STOP Bit is ON
Memory operation	START	No
	INDEPENDENT START	No
	FORCED INTERRUPT	No
Direct operation	ABSOLUTE MOVEMENT	No
	RELATIVE MOVEMENT	No
	INTERRUPT FEEDING	No
Other	ORIGIN SEARCH	No
	ORIGIN RETURN	No
	PRESENT POSITION PRESET	Yes
	JOG	No
	TEACH	Yes
	RELEASE PROHIBIT/ ERROR RESET	Yes
	Error counter reset output, origin adjustment command output	Yes
	Override enable	Yes
Data transfer	WRITE DATA	Yes
	READ DATA	Yes
	SAVE DATA	Yes

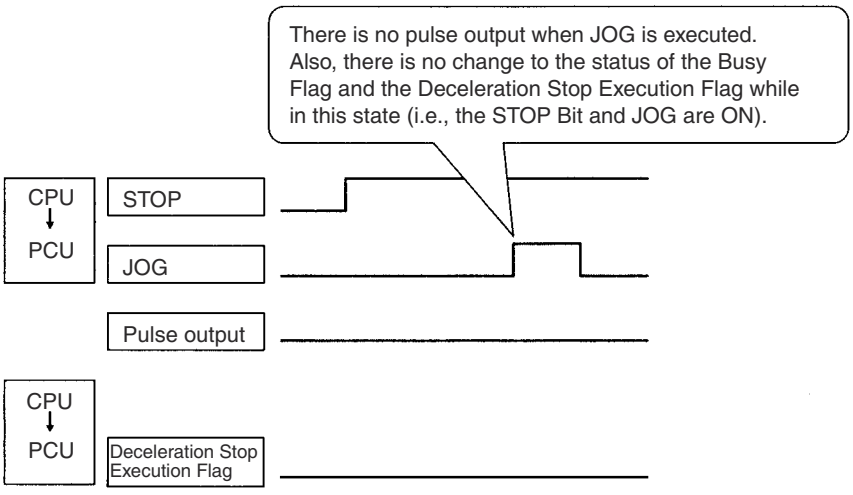

Note When deceleration stop is turned ON while outputting the pulse for the backlash compensation data, a deceleration stop is not executed immediately but a stop is executed after output of the pulse for the backlash compensation data is completed. Be careful if a large value will be set for the backlash compensation data.

9-5-2 Beginning Words of Operating Memory Area, Operating Data Area, and Parameter Areas

The beginning words of the operating memory area, operating data area, and common parameter area used for a Position Control Unit (PCU) are determined (or set) according to the following.

- Beginning word of the operating memory area, n = CIO 2000 + 10 × unit number
- Beginning word of the common parameter area, m = D20000 + 100 × unit number
- Beginning word of the operating data area, l, is specified in m and m+1.

Set the beginning words of the operating data area and designate the axis parameters used with the common parameters as shown below.

Word	Name	Bit	Reference
m	Operating data area designation	00 to 15	*SECTION 4*
m+1	Beginning word of operating data area	00 to 15	
m+2	Axis parameter designation	00 to 15	

9-5-3 Operating Memory Area Allocation

Name	Model	Operating memory area				Bit	Details
		X axis	Y axis	Z axis	U axis		
STOP	NC4□3 NC2□3 NC1□3	n n n	n+2 n+2	n+4	n+6	15	↑ : Starting decelerated stop
Deceleration Stop Execution Flag	NC4□3 NC2□3 NC1□3	n+8 n+4 n+2	n+11 n+7	n+14	n+17	15	↑ : STOP completed (See note) ↓ : When operation starts
Busy Flag						13	1: Busy

Note During pulse output, the Deceleration Stop Execution Flag turns ON when the STOP Bit is turned ON. When there is no pulse output, the Deceleration Stop Execution Flag does not turn ON when the STOP Bit is turned ON.

9-5-4 Deceleration Stop During Positioning

Deceleration Stop During Positioning with Absolute Positions

When a deceleration stop has occurred before the target position has been reached, the positioning can be resumed by executing START.

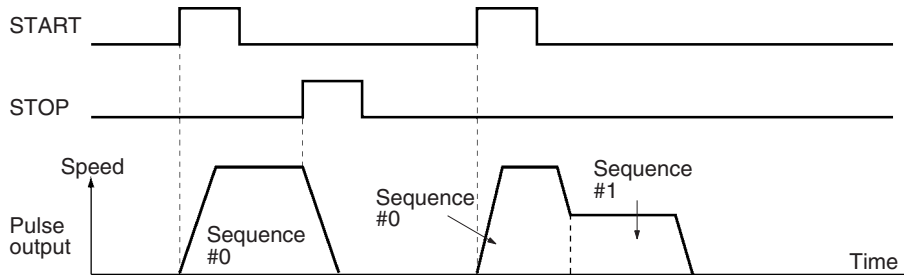

If the completion code of the stopped positioning action is anything other than continuous, when a deceleration stop occurs after the target position has been passed it is possible to resume positioning by executing START.

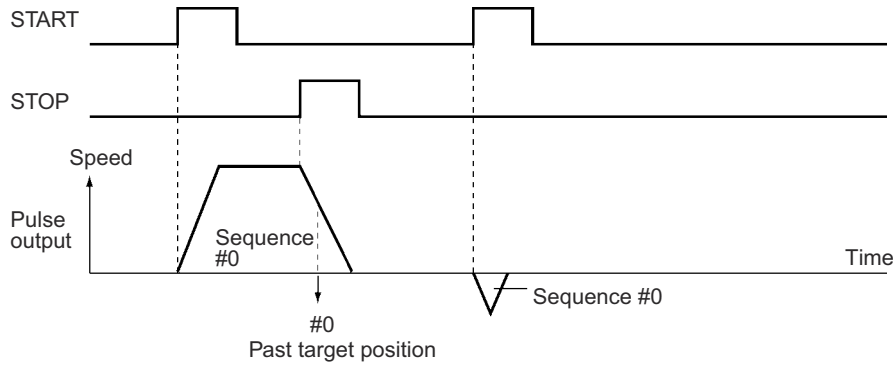

If the completion code is continuous, positioning returns to the target position of sequence #0 and an immediate reversal is executed without deceleration. Then positioning is executed for sequence #1.

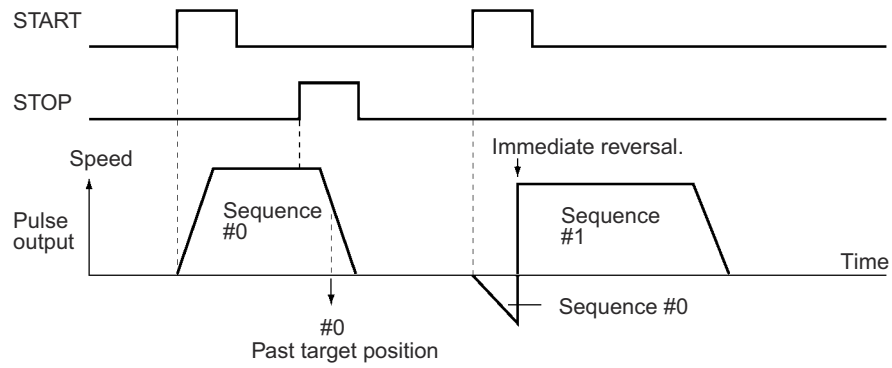

Deceleration Stop During Positioning with Relative Positions

When positioning is stopped by a deceleration stop, the sequence that was stopped is re-executed by starting positioning again.

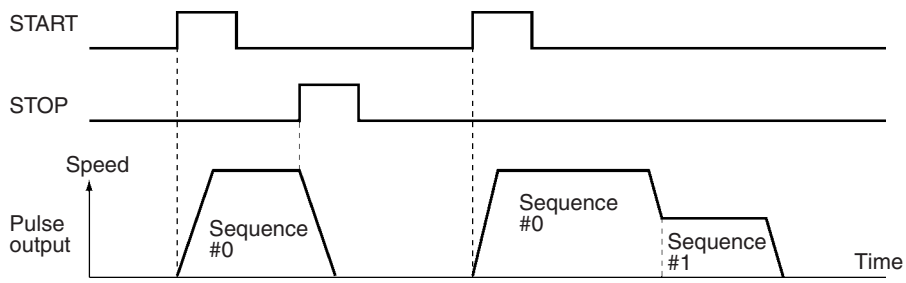

Deceleration Stop with Linear Interpolation

A deceleration stop with linear interpolation is executed by the STOP Bit of the axis for which the START Bit (to start memory operation) is turned ON. After deceleration has been completed, the Deceleration Stop Execution Flag is turned ON. The STOP Bits of other axes are disabled.

For example, when executing linear interpolation for X-axis data with the X and Y axes, deceleration stop can only be executed by the Deceleration Stop Bit of the X axis. When deceleration stop is executed during interpolation operation, both the X and Y axes stop from deceleration.

When positioning is restarted, the target position will vary, as shown below, according to whether the positions for each active axis are relative or absolute. In this example, linear interpolation is executed for the X and Y axes.

When X Axis Position is Relative and Y Axis is Absolute

When positioning is stopped by a deceleration stop, the sequence that was stopped can be re-executed by restarting X-axis positioning. Positioning will be resumed for the Y axis.

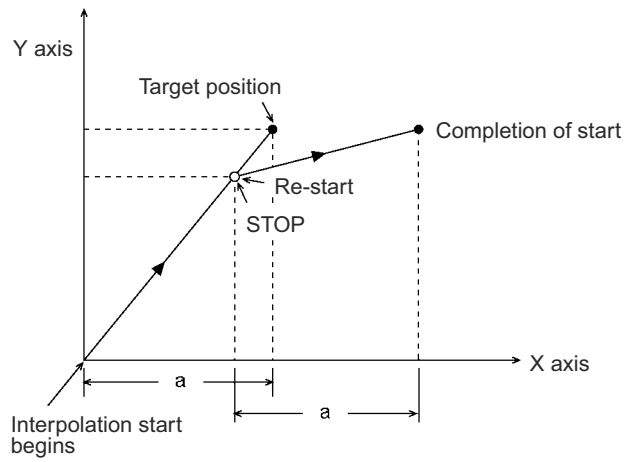

When the X axis position is absolute and the Y axis position is relative, the X axis and Y axis operate in the opposite way from that illustrated above.

When the X Axis and Y Axis Positions are Both Absolute

When a decelerated stop is executed before the target position has been reached, positioning is resumed for both axes by restarting.

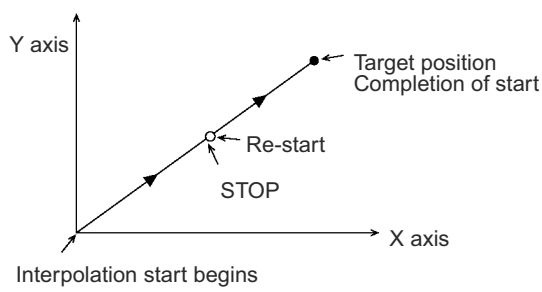

For details regarding operation when the target position has been passed for an axis with an absolute position, refer to *Deceleration Stop During Positioning with Absolute Positions* on page 243.

When the X Axis and Y Axis Positions are Both Relative

When positioning is stopped by a deceleration stop, the stopped sequences for both axes are re-executed by restarting positioning.

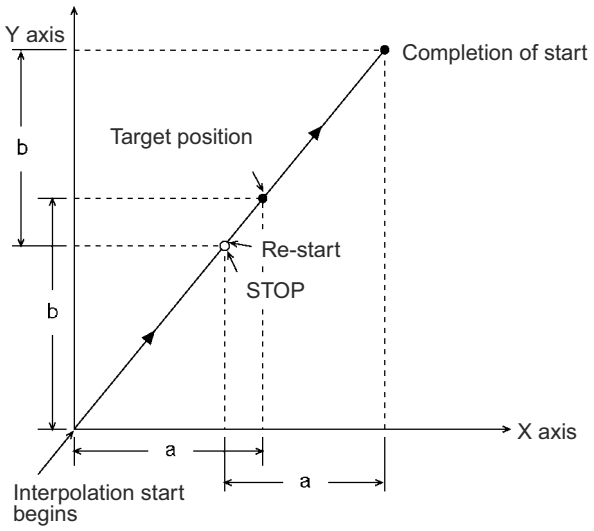

9-5-5 Timing Chart

In the following timing chart, X-axis positioning with a 4-axis PCU for an ABSOLUTE MOVEMENT command is stopped by a deceleration stop.

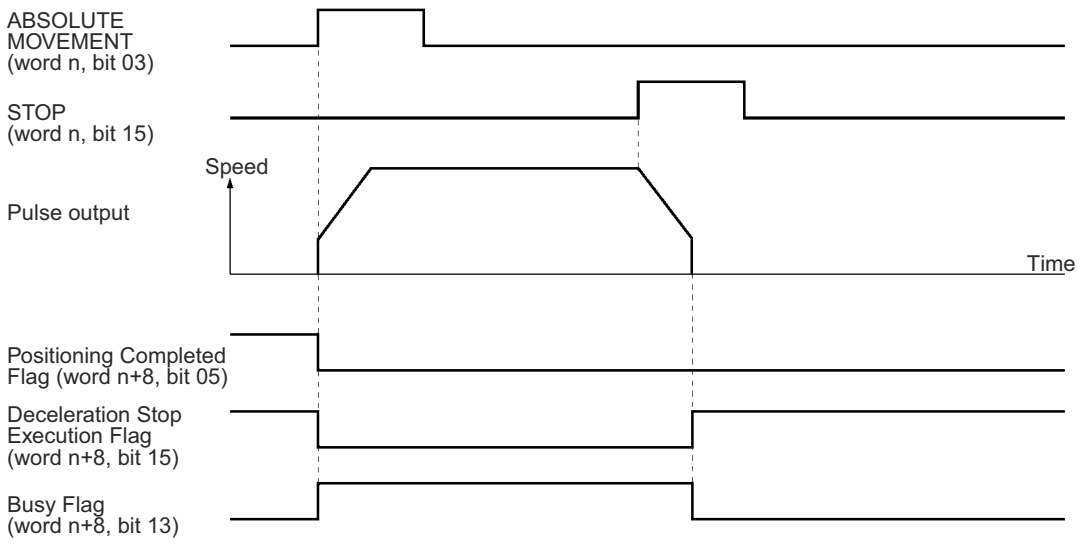

If the STOP Bit is turned ON during memory operation, the Deceleration Stop Execution Flag for axes for which pulse output is being made will turn ON after those axes are decelerated to a stop. For example, when memory operation (started from the X axis) is being performed for the X, Y, and Z axes, if the STOP Bit for the X axis is turned ON, the Deceleration Stop Execution Flags for each of the axes will turn ON after all 3 axes have decelerated to a stop.

9-6 Override

The override operation is used for changing the speed of an active axis.

9-6-1 Outline of Operation

While the Override Enable Bit is ON, the target speed is changed by applying the override value that is set in the operating data area. The override can be set from 0 to 999%. The speeds set for memory operation, direct operation, jogging, and so on, are taken to be 100%.

Target speed = Speed setting x Override/100

If the override is greater than the maximum speed for an axis, the target speed will be the maximum speed.

Override is not enabled for pulse output during origin search. It is enabled, however, for the pulse output for the amount of compensation when origin compensation is used.

Normally, override operates immediately. Depending on the function being used, however, there may be cases where there is a time lag before it operates, or cases where it does not operate at all.

Note

1. During override, the acceleration and deceleration times are automatically adjusted so that the acceleration and deceleration rates are kept constant. For details on calculating the actual acceleration and deceleration times, refer to *7-6 Acceleration/Deceleration* and *8-9 Acceleration/Deceleration*.
2. If the Override Enable Bit is turned OFF, the override value returns to 100%.

Memory Operation when Completion Code is not "Continuous"

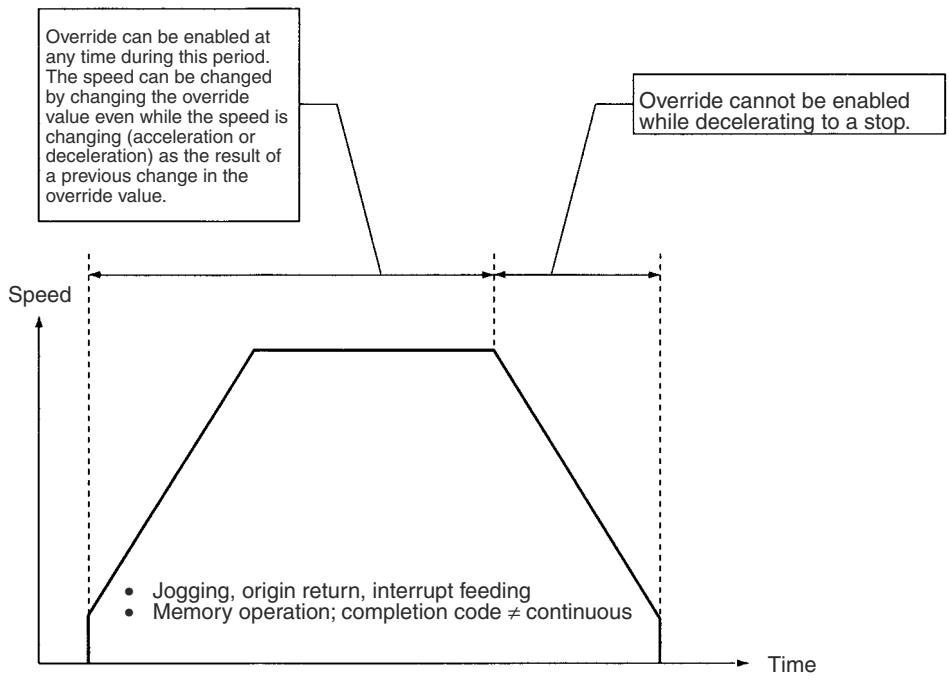

Memory Operation when Completion Code is "Continuous"

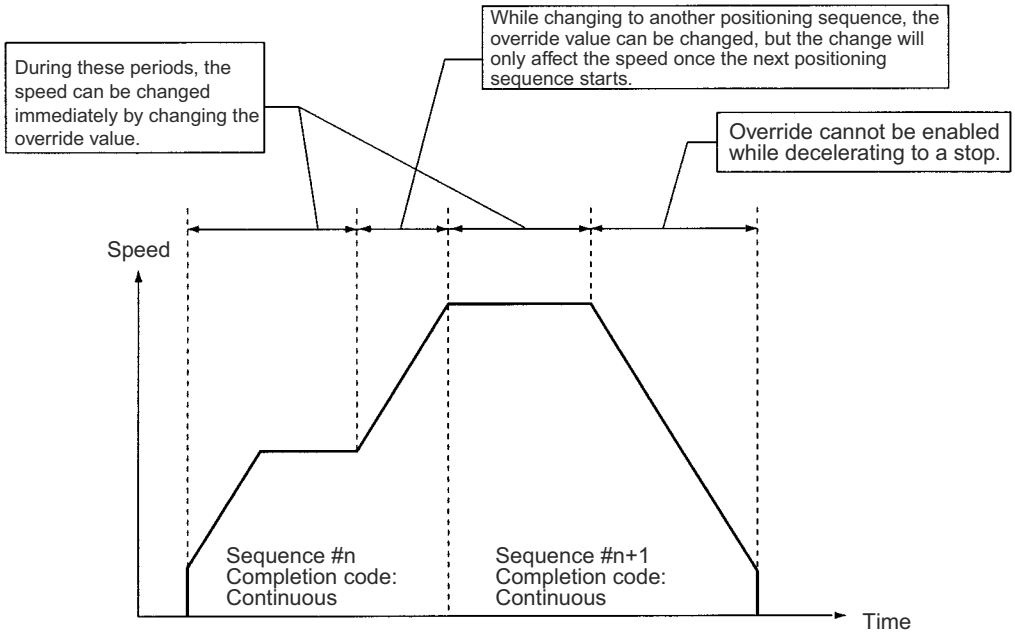

Note A 0% override cannot be specified. If 0% is specified, an override error (error code 8500) is generated when the Override Enable Bit is turned ON.

9-6-2 Beginning Words of Operating Memory Area, Operating Data Area, and Parameter Areas

The beginning words of the operating memory area, operating data area, and common parameter area used for a Position Control Unit (PCU) are determined (or set) according to the following.

- Beginning word of the operating memory area, n = CIO 2000 + 10 × unit number
- Beginning word of the common parameter area, m = D20000 + 100 × unit number
- Beginning word of the operating data area, l, is specified in m and m+1.

Set the beginning words of the operating data area and designate the axis parameters used with the common parameters as shown below.

Word	Name	Bit	Reference
m	Operating data area designation	00 to 15	*SECTION 4*
m+1	Beginning word of operating data area	00 to 15	
m+2	Axis parameter designation	00 to 15	

9-6-3 Operating Memory Area Allocation and Operating Data Area Settings

Operating Memory Area

Name	Model	Operating memory area				Bit	Details
		X axis	Y axis	Z axis	U axis		
Override Enable Bit	NC4□3 NC2□3 NC1□3	n n n	n+2 n+2	n+4	n+6	14	1: Enable; 0: Disable

Operating Data Area

Name	Model	Operating data area				Bit	Data configuration
		X axis	Y axis	Z axis	U axis		
Speed	NC4□3 NC2□3 NC1□3	I+10 I+11 I+10 I+11 I+10 I+11	I+22 I+23 I+22 I+23	I+34 I+35	I+46 I+47	00 to 15 (rightmost) 00 to 15 (leftmost)	15 Leftmost 00 15 Rightmost 00 Setting range: 1 to 7A120 Hex (1 to 500,000 pps)
Override	NC4□3 NC2□3 NC1□3	I+17 I+17 I+17	I+29 I+29	I+41	I+53	00 to 15	15 00 Override (%) Set the override in the range 0001 to 03E7 Hex (1 to 999%).

9-6-4 Timing Chart

In the following timing chart, the target speed is changed by the override while jogging the X axis for a 4-axis PCU.

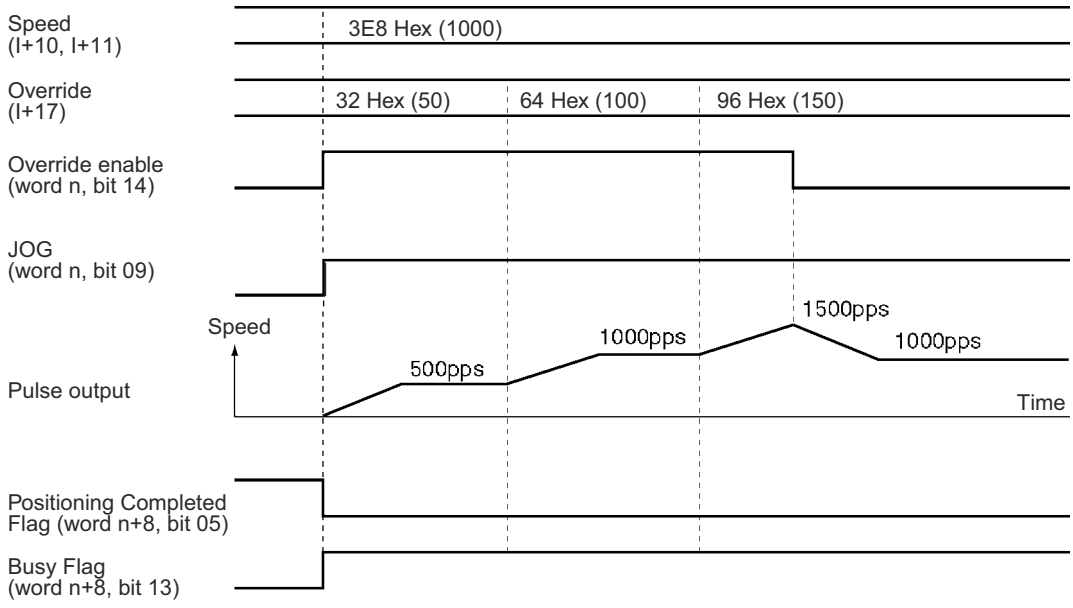

9-7 Error Counter Reset Output and Origin Adjustment Command Output

9-7-1 Outline of Operation

Error counter reset output and origin adjustment command output are used as the following kinds of signals, depending on the operation mode, and they control the ON/OFF status of the error counter reset output/origin adjustment command output from the external I/O connectors.

- General purpose output (mode 0)
- Error counter reset output (modes 1 and 2)
- Origin adjustment command output (mode 3)

Operation mode	Explanation
0	Can be used as general purpose output. This bit's ON/OFF status can be output to external I/O connector just as it is. This bit can be always ON or OFF regardless of the PCU's status.
1, 2	Used as error counter output. External I/O connectors error counter reset output and origin adjustment command output are connected to the Servo Drive's error counter reset. For origin search, the error counter reset output is automatically output for approximately 20 ms upon completion. When this bit is turned ON, the error counter reset signal is output. The following processing is executed: 1) Pulse output is stopped. 2) The origin determination is released. 3) The error counter reset outputs are output (ON). While this bit is ON, if operations such as direct operation, memory operation, origin search, or jogging are executed, an error counter reset or origin adjustment command output error (error code 8400) will be generated. Make sure this bit is OFF before executing the operation. Do not turn this bit ON during an origin search. If it is turned ON during an origin search (while busy), an error counter reset or origin adjustment command output error (error code 8400) will be generated.
3	Used for wiring check and output of origin adjustment command signal. Connect the error counter reset output/origin-adjustment command output from the external I/O connector to the origin adjustment command on the Servo Drive. When this bit is turned ON, the output of the origin adjustment command is output (ON). While this bit is ON, if operations such as direct operation, memory operation, origin search, or jogging are executed, an error counter reset or origin adjustment command output error (error code 8400) will be generated. The bit can only be turned ON while pulse outputs are stopped. If it is turned ON during pulse output, an error counter reset or origin adjustment command output error (error code 8400) will be generated.

9-7-2 Beginning Words of Operating Memory Area, Operating Data Area, and Parameter Areas

The beginning words of the operating memory area, operating data area, and common parameter area used for a Position Control Unit (PCU) are determined (or set) according to the following.

- Beginning word of the operating memory area, n = CIO 2000 + 10 × unit number

- Beginning word of the common parameter area, m = D20000 + 100 × unit number
- Beginning word of the operating data area, l, is specified in m and m+1.

Set the beginning words of the operating data area and designate the axis parameters used with the common parameters as shown below.

Word	Name	Bit	Reference
m	Operating data area designation	00 to 15	*SECTION 4*
m+1	Beginning word of operating data area	00 to 15	
m+2	Axis parameter designation	00 to 15	

9-7-3 Operating Memory Area Allocation and External I/O Connector Pin Arrangement

Operating Memory Area

Name	Model	Operating memory area				Bit	Details
		X axis	Y axis	Z axis	U axis		
Error counter reset output and origin adjustment command output	NC4□3 NC2□3 NC1□3	n n n	n+2 n+2	n+4	n+6	13	1: ON; 0: OFF
Busy Flag	NC4□3 NC2□3 NC1□3	n+8 n+4 n+2	n+11 n+7	n+14	n+17	13	1: Busy

Pin Arrangement

Pin number	Name
A10 (X/Z axis)/B10 (Y/U axis)	Error counter reset output or origin adjustment command output (24 v)
A11 (X/Z axis)/B11 (Y/U axis)	Error counter reset output or origin adjustment command output (5 v)

9-7-4 Timing Chart

In the following timing chart, operation modes 0 to 2 are used, with the X axis for a 4-axis PCU taken as an example.

Example 1: Used as general outputs in mode 0

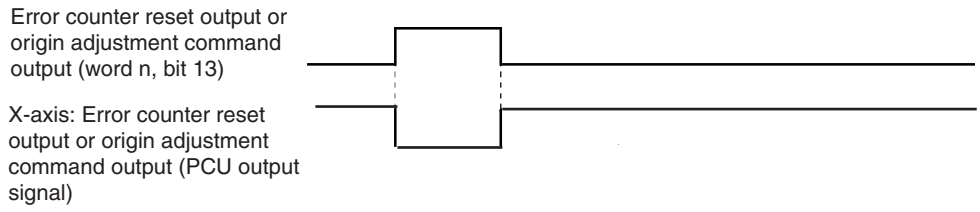

Example 2; Error counter reset output turned ON during an ABSOLUTE MOVEMENT command in operation mode 1

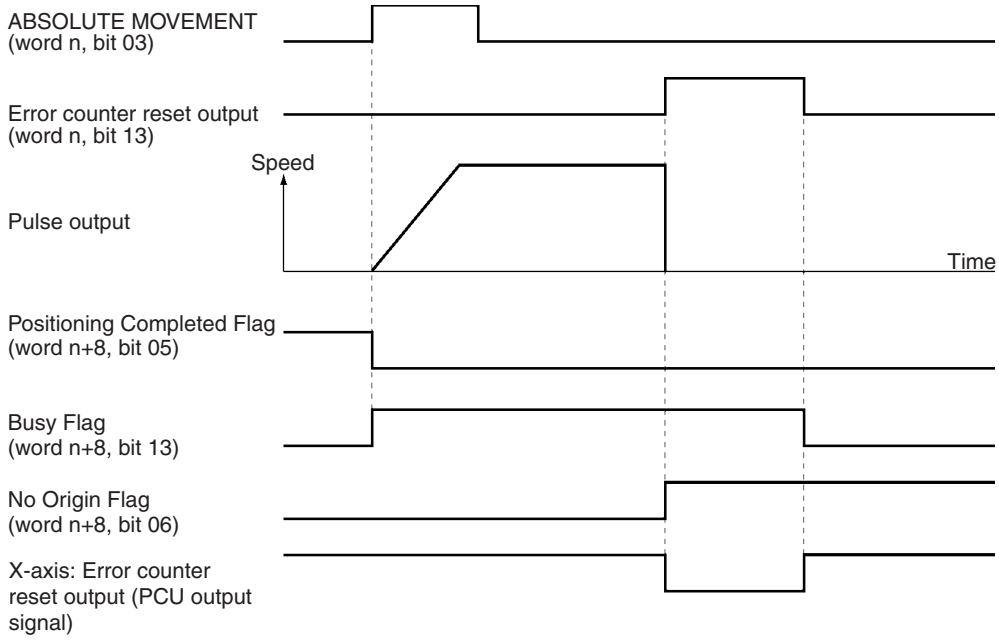

Example 3: Error counter reset output turned ON during memory operation in mode 2

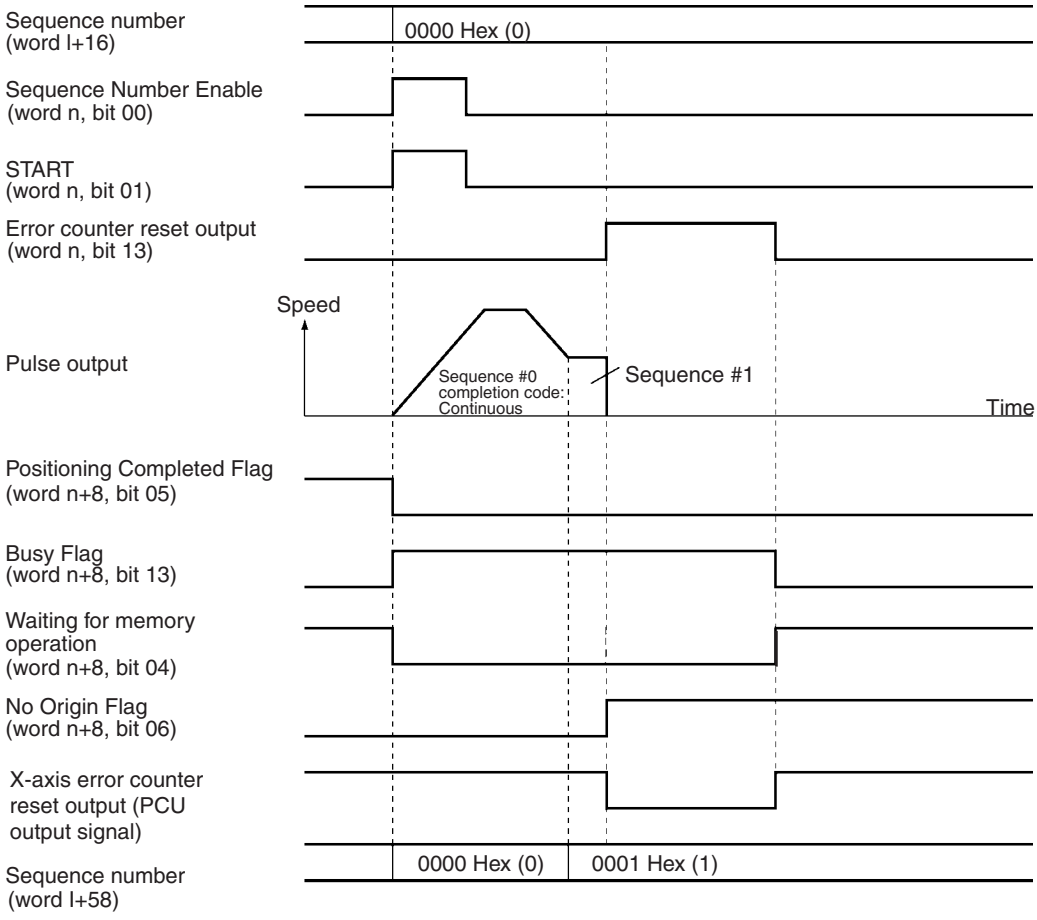

Example 4: Origin adjustment command output turned ON in operating mode 3 (only while pulses stopped)

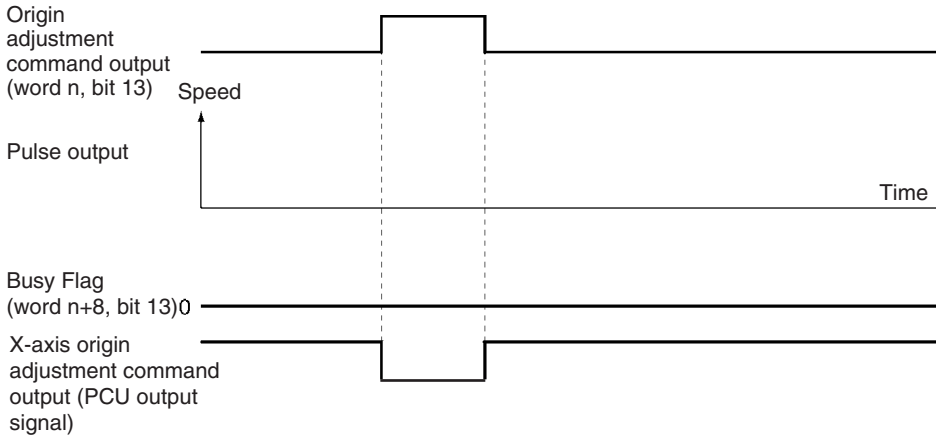

9-8 Backlash Compensation

9-8-1 Outline of Operation

"Backlash" means the play between the driving axis and the mechanical system being driven. If there is backlash in positioning from the positive or negative direction it will cause a discrepancy of the same magnitude in the positioning. Backlash compensation is used to make this discrepancy as small as possible.

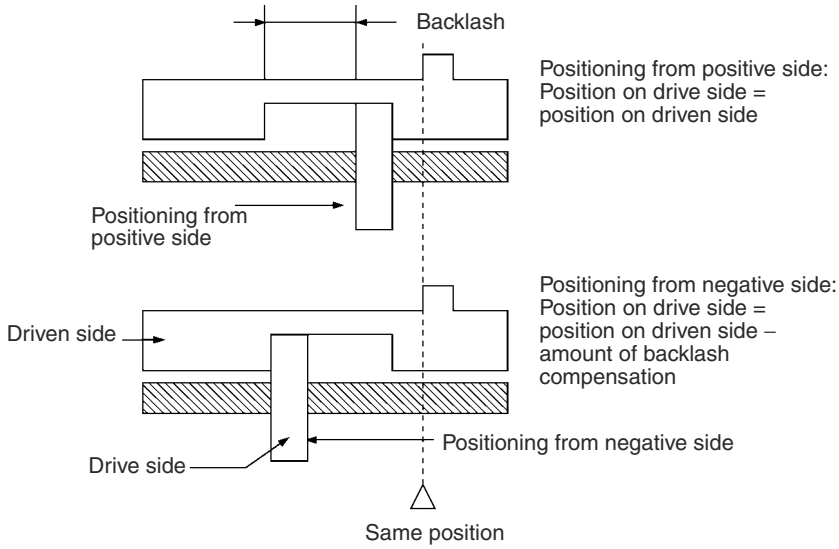

In the above diagram, after positioning from the positive side, backlash is compensated for up to the amount of the output of pulses set for the backlash compensation either when positioning in the negative direction or when the positioning direction (pulse output direction) is reversed.

With this PCU, the backlash compensation and backlash compensation speed can be designated by parameters.

The backlash compensation operation is used after the origin has been established. If the backlash compensation speed is set to "0," compensatory output is made at the initial speed. If the initial speed is below 250 pps, the compensatory speed is output at 250 pps.

9-8-2 Beginning Words of Operating Memory Area, Operating Data Area, and Parameter Areas

The beginning words of the operating memory area, operating data area, and common parameter area used for a Position Control Unit (PCU) are determined (or set) according to the following.

- Beginning word of the operating memory area, n = CIO 2000 + 10 × unit number
- Beginning word of the common parameter area, m = D20000 + 100 × unit number
- Beginning word of the operating data area, l, is specified in m and m+1.

Set the beginning words of the operating data area and designate the axis parameters used with the common parameters as shown below.

Word	Name	Bit	Reference
m	Operating data area designation	00 to 15	*SECTION 4*
m+1	Beginning word of operating data area	00 to 15	
m+2	Axis parameter designation	00 to 15	

9-8-3 Setting Axis Parameters

Data	Parameter area for each axis				Bit	Data Configuration
	NC113	NC213	NC413			
	X axis	Y axis	Z axis	U axis		
Backlash compensation	m+16	m+44	m+72	m+100	00 to 15	15 … 00 Backlash compensation Setting range: 0000 to 270F Hex (0000 to 9,999 pulses)
Backlash compensation speed	m+17 m+18	m+45 m+46	m+73 m+74	m+101 m+102	00 to 15 (rightmost) 00 to 15 (leftmost)	15 Leftmost … 00 15 Rightmost … 00 Backlash compensation speed Setting range: 00000000 to 0007A120 Hex (0 to 500,000 pps)

9-8-4 Backlash Compensation Operation

Reciprocating Operation on One Axis

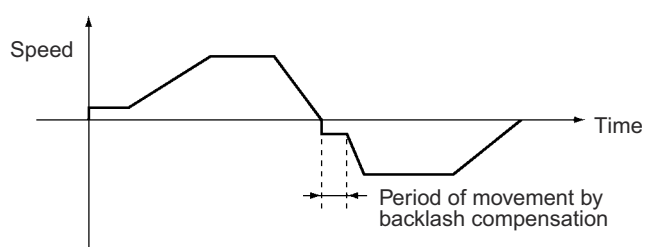

9-8-5 Backlash Compensation With Linear Interpolation

Backlash compensation can be set separately for each axis when two or more axes are used for interpolation operations. While backlash compensation pulses are being output, pulse outputs for all other interpolation operations are stopped.

Example: Linear interpolation using the X and Y axes

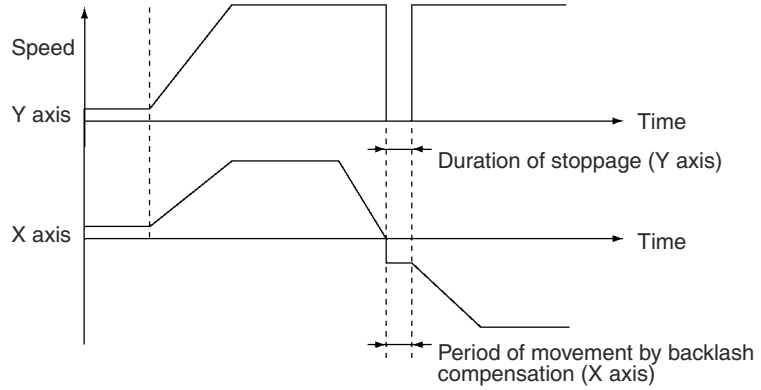

If the backlash compensation setting is different for each axis in an interpolation operation, during the period that interpolation is being executed for both axes simultaneously, the axes will wait for the compensation to be completed and then accelerate.

Example: Linear interpolation using the X and Y axes

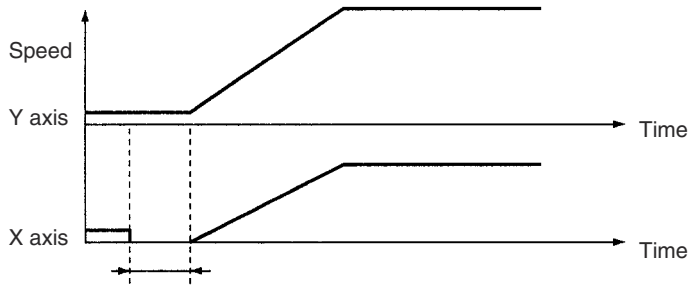

Note When deceleration stop is turned ON while outputting the pulse for the backlash compensation data, a deceleration stop is not executed immediately but a stop is executed after output of the pulse for the backlash compensation data is completed. Be careful if a large value will be set for the backlash compensation data.

9-9 Software Limit

9-9-1 Outline

In order to prevent damage to external devices due to unexpected positioning operation when there is a malfunction, in addition to the CW and CCW limit input signals, the PCU also has a function that monitors the position at a software level. This function is called the “software limit” function. The range in which the software limit function monitors the position is determined by the values of two settings: the CW software limit and the CCW software limit. Normally, positioning is only possible within the range determined by these settings.

The relationship between the CW and CCW limit input signals, the software limits, and the mechanical stoppers used in the system, is shown below.

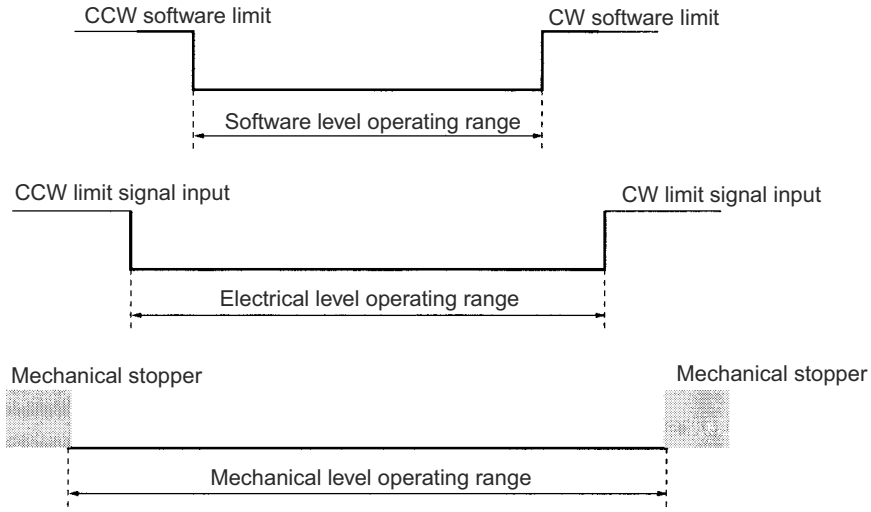

The software limit function is enabled if an origin has been established (i.e., the No Origin Flag is OFF) and the CW software limit setting is greater than the CCW software limit setting. In any other situation, the software limit function will be disabled and operation for the present position will proceed as follows.

- From the stopped state, before pulse output is started, the present position is set to 0.
- During pulse output, the present position will be changed as long as the position does not go outside the following upper and lower limits:
  For pulse output in CW direction: 2,147,483,647 pulses (7FFFFFFF Hex)
  For pulse output in CCW direction: –2,147,483,647 pulses (80000001 Hex)

9-9-2 Beginning Words of Operating Memory Area, Operating Data Area, and Parameter Areas

The beginning words of the operating memory area, operating data area, and common parameter area used for a Position Control Unit (PCU) are determined (or set) according to the following.

- Beginning word of the operating memory area, n = CIO 2000 + 10 × unit number
- Beginning word of the common parameter area, m = D20000 + 100 × unit number
- Beginning word of the operating data area, l, is specified in m and m+1.

Set the beginning words of the operating data area and designate the axis parameters used with the common parameters as shown below.

Word	Name	Bit	Reference
m	Operating data area designation	00 to 15	*SECTION 4*
m+1	Beginning word of operating data area	00 to 15	
m+2	Axis parameter designation	00 to 15	

9-9-3 Setting Axis Parameters

Data	Parameter area for each axis				Data Configuration
	NC1□3	NC2□3	NC4□3		
	X axis	Y axis	Z axis	U axis	
CCW software limit	m+25 (rightmost) m+26 (leftmost)	m+53 (rightmost) m+54 (leftmost)	m+81 (rightmost) m+82 (leftmost)	m+109 (rightmost) m+110 (leftmost)	Both the CCW and CW software limits have the configuration shown below 15 Leftmost 00 15 Rightmost 00 Setting range: C0000001 to 3FFFFFFF Hex (–1,073,741,823 to 1,073,741,823 pulses) If the CCW software limit is greater than or equal to the CW software limit, the software limit function will be disabled.
CW software limit	m+27 (rightmost) m+28 (leftmost)	m+55 (rightmost) m+56 (leftmost)	m+83 (rightmost) m+84 (leftmost)	m+111 (rightmost) m+112 (leftmost)	

9-9-4 Operation Timing

The timing with which the software limit function operates will depend on the type of positioning performed.

1,2,3...

1. In the axis parameter area, set the software limits so that CCW software limit < CW software limit.
2. Establish the origin using origin search or present position preset (the No Origin Flag turns OFF). The software limit function is disabled during origin search.
3. After the origin has been established, there are two times at which checks are made: before positioning (pulse output is stopped) and during positioning (during pulse output). The timing of the checks varies with the operation as shown in the following table.

Positioning operation		Check before positioning: Is the position setting within the software limits?		Check during positioning
		Within range	Outside range	
Direct operation	Absolute positioning or relative positioning	OK	Operation not possible.	No check is performed unless the position setting is changed during operation. If the position setting is changed during operation and the new position is outside the software limit range, operation decelerates to a stop to a position within the software limit range.
	Interrupt feeding	OK	OK	If the total number of pulses (the position) output during speed control is outside the software limit range, operation decelerates to a stop to a position outside the software limit range. If the sum of the specified amount of movement after the interrupt input and the number of pulses output until the interrupt input is received is outside the software limit range, operation decelerates to a stop to a position outside the software limit range.
Memory operation	1-axis or linear interpolation positioning	OK	Operation not possible.	No check is performed unless the position setting is changed with the start of the forced interrupt. If the position setting is changed with the start of forced interrupt, and the new position is outside the software limit range, operation decelerates to a stop to a position within the software limit range.
	Speed control	OK	OK	If the total number of pulses (the position) output is outside the software limit range, operation decelerates to a stop to a position outside the software limit range.
	Interrupt feeding	OK	OK	Same operation as interrupt feeding in direct operation.
Direct operation or memory operation	Origin return	OK	Operation not possible.	Not checked
	Jogging	OK	OK	If the total number of pulses (the position) output is outside the software limit range, operation decelerates to a stop to a position outside the software limit range.

Note
1. Origin return is not possible if 0 is outside the software limit range. For example, if the software limits are 100 and 200 respectively, origin return is not possible.
2. When the software limit function operates, an error related to the software limit function, such as manual CW limit error (error code 5070), will be generated.

9-10 Stop Function

9-10-1 Outline

Pulse output is stopped by the PCU for a variety of problems or situations that can arise during positioning. The situations that will result in the PCU stopping pulse output are related to one of the following 3 areas.

- The PLC as a whole (or some other part of the PLC)

- Internal PCU operation
- Input signals

Operation can be stopped either according to the deceleration curve or immediately.

9-10-2 Stop Methods

The following table shows the stopping methods for the 3 areas listed above. For more details, and for information on restoring operation, refer to *SECTION 11 Troubleshooting*.

Area		Stopping method	Status category
Internal PCU operation (when an error has occurred, e.g., because the present position is outside the software limit range)		Operation is stopped according to the deceleration curve.	Error
Input signal	CW/CCW limit input signal turns ON.	Operation is stopped immediately.	Error
	Emergency stop input signal turns ON.		
CPU Unit	A command to the operating memory area (e.g., STOP command).	Operation is stopped according to the deceleration curve.	Normal operation
	Operation is stopped (by changing to PROGRAM mode from RUN mode or MONITOR mode).		
	Load is turned OFF.	Error counter reset output and origin adjustment command output is turned OFF. Operation is stopped according to the deceleration curve. If the load is turned ON again, operation is restored.	Normal operation
	WDT error (PLC error)	Error counter reset output and origin adjustment command output is turned OFF. If a fatal error is generated by the FALS instruction, the status of outputs will not change. Operation is stopped immediately.	Error
	Bus error		
	Stop error (PLC error)		

9-11 Easy Backup Function (Ver. 2.0 or later)

9-11-1 Introduction

An easy operation for backing up PLC data is available when a PCU (CS1W-NC113/213/413/133/233/433) version 2.0 or later is used under a CS1-H CPU Unit. The function can simultaneously and automatically back up and restore the following data from/to flash memory in the PCU at the same time as CPU Unit data using a Memory Card in the CPU Unit. It can also compare the data.

- Parameters for each axis
- Sequence data
- Speed data
- Acceleration/deceleration time data
- Dwell timer data

- Zone data

  Note Data for all Unit axes is stored at the same time.

When data from flash memory in the PCU is written to a Memory Card using the easy backup operation, the data is backed up on the Card as a Unit/Board backup file using the following file name.

File name: BACKUP□□.PRM

Note □□ is the PCU's unit address, that is the unit number + 10 hex.

This is also the file that is read from Memory Card and used for data comparison.

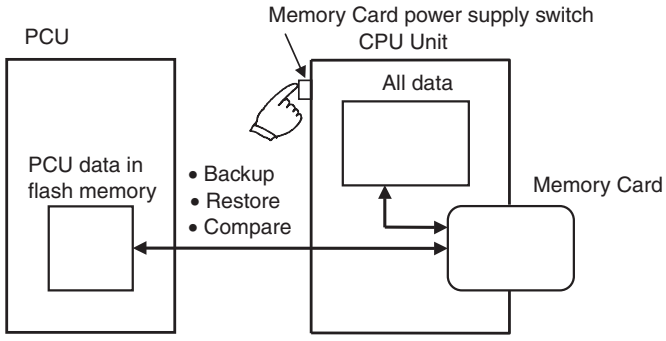

Note (1) This function is available only for the Unit combinations marked *Yes* in the following table.

CPU Unit	PCU	
	CS1W-NC113/133/213/233/413/433 Ver. 2.0 or later	**CS1W-NC113/133/213/233/413/433 Ver. 1.0**
CS1-H CPU Unit	Yes	No
CS1 CPU Unit	No	No

(2) Do not try to store data in PCU flash memory while data is being backed up. Otherwise the data will not be backed up correctly and a parameter corrupted error (error code: 0001) will be displayed when you try to restore the data (i.e., read it from Memory Card).

(3) Data in flash memory can be backed up even if it is corrupted. However, a parameter corrupted error (error code: 0001) will be displayed when you try to restore the data (i.e., read it from Memory Card).

9-11-2 Applications

Use the easy backup function to back up data for the entire PLC, including the CPU Unit, MC Units, DeviceNet Units, and Serial Communications Units/Boards, or to prepare backup data when Units are being replaced.

9-11-3 Operating Procedures

Backing Up PCU Data Files on Memory Card

Set the DIP switch on the front of the CPU Unit as shown in the following table, and then press and hold the Memory Card power supply switch for three seconds.

DIP switch pins on the CPU Unit	
SW7	**SW8**
ON	OFF

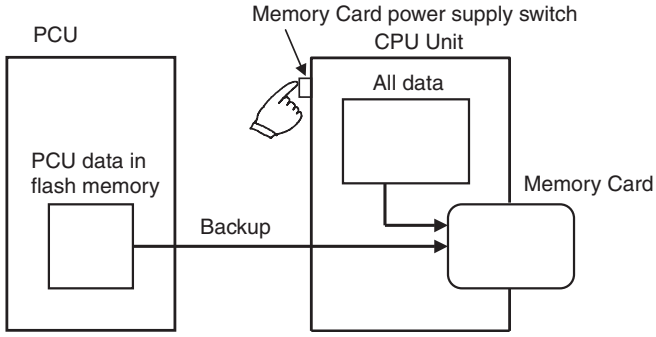

This creates a PCU data file and writes this files along with other backup files to the Memory Card. When the power supply switch is pressed, the MCPWR indicator on the front of the CPU Unit will flash once and then remain lit while data is being written. The indicator will go out after all data has been written to the Card.

Restoring PCU Data Files from Memory Card (Reading Data and Writing It to the Unit)

Set the DIP switch on the front of the CPU Unit as shown in the following table, and turn ON the PLC.

DIP switch pins on CPU Unit	
SW7	**SW8**
ON	OFF

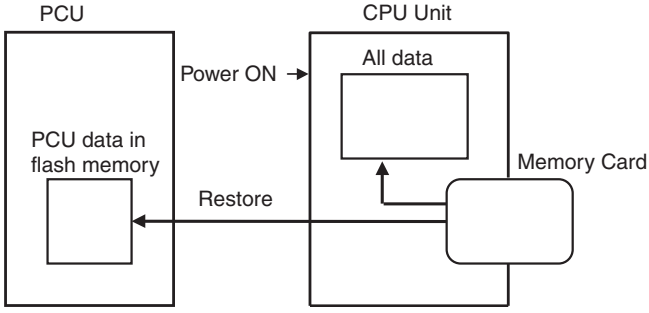

This reads the PCU data file on Memory Card and restores the data to the PCU.

Note When data is restored, it is read from Memory Card to PCU RAM where it is checked. If the check ends successfully, the data is automatically written to flash memory. If the check fails, then a parameter corrupted error (error code: 0001) will be displayed, the RAM will be initialized and nothing will be written to flash memory.

When power is turned ON, the MCPWR indicator on the front of the CPU Unit will light, flash once, and then remain lit while data is being written. The indicator will go out after all data has been written to the Card.

Comparing Data with PCU Data Files on Memory Card

Set the DIP switch on the front of the CPU Unit as shown in the following table, and then press and hold the Memory Card power supply switch for three seconds.

DIP switch pins on the CPU Unit	
SW7	**SW8**
OFF	OFF

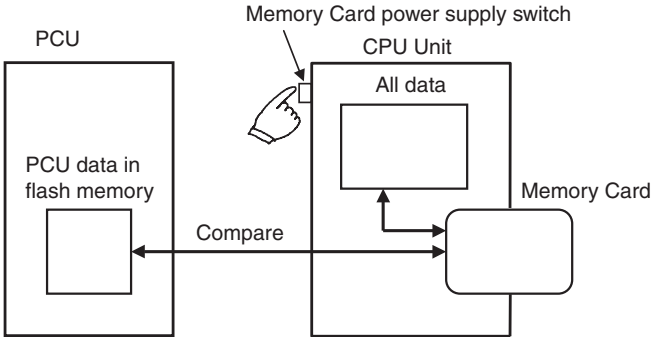

This compares data from PCU flash memory with data in PCU data file on the Memory Card. When the power supply switch is pressed, the MCPWR indicator on the front of the CPU Unit will flash once and then will remain lit while data is being compared. The indicator will go out after the comparison has been completed as long as the data matches.

SECTION 10
Program Examples

This section provides examples of programs for using the Position Control Unit.

10-1 Operating Procedures for Program Examples 264
10-2 Memory Operation 266
10-2-1 Checking Positioning Operations 266
10-2-2 Repeat Operation 271
10-2-3 Cancelling Positioning 275
10-3 Direct Operation 281
10-3-1 Positioning with Positions in the DM Area 281
10-3-2 Inching 284
10-4 Linear Interpolation. 287
10-4-1 Two-axis Linear Interpolation 287
10-5 Origin Search 293
10-5-1 Origin Search Using Limit Input 293
10-6 Override. 296
10-6-1 Changing Speed During Pulse Output 296
10-7 Transferring and Saving Data 299
10-7-1 Copying Data 299

10-1 Operating Procedures for Program Examples

The following explanations describe some procedures for using test equipment to check the operation of the program examples introduced in this section. Refer to the various relevant sections for more information on particular procedures.

Startup Procedures

1,2,3...

1. Preparing the Equipment to be Used
   The following devices are the minimum required for positioning with a Position Control Unit (PCU).

Model	Notes
Position Control Unit	CS1W-NC113/NC133/NC213/NC233/NC413/NC433
SYSMAC CS-series CPU Unit	CS1G/H-CPU□□□
Power Supply Unit	C200HW-PA204/PA204S/PA204R/PD024/PA209R
Backplane	CS1W-BC□□3
Motor driver	The following are required: Servomotor, driver, and cabling between the motor and driver. Stepping motor, driver, and cabling between the motor and driver. Control cable between the PCU and driver.
24-VDC power supply	Direct current
Tools	CS-series tools (such as C200H-PRO27)
Personal computer	Required when using the CX-Programmer and the NC Support Tool (CX-Position) (A connecting cable for the CPU Unit is also required separately)

2. Mounting the Units
   The CPU Unit, PCU and Power Supply Unit are mounted on a Backplane. The following settings are needed for the PCU.

Item	Setting
Special I/O Unit number	NC1□3/2□3: 0 to 95 NC4□3: 0 to 94

3. Connections and Circuitry (Refer to *SECTION 3 Installation and Wiring*.)
   Wire the power supplies with the motor and driver, and with the PCU and driver. If the following minimum wiring requirements are not met, an error will be generated and the PCU will not operate.

Terminals	Wiring
24-V power supply for output (A1/B1)	+24 VDC (24-VDC power supply positive terminal)
Output power supply 0 V (A2/B2)	0 V (24-VDC ground for power supply)
Common input (A24/B24)	+24 VDC (24-VDC power supply positive terminal)
CW limit input (A22/B22)	Connected to the ground of the power supply used as the common input through the N.C. contact switch. (Can be changed to an N.O. contact in the common parameters.)
CCW limit input (A23/B23)	Connected to the ground of the power supply used as the common input through the N.C. contact switch. (Can be changed to an N.O. contact in the common parameters.)
Emergency stop input (A20/B20)	Connected to the ground of the power supply used as the common input through the N.C. contact switch.

Note When using the NC2□3/NC4□3, make the above connections as a minimum, even for unused axes. If this wiring is not done, an error will be generated and the PCU will not operate.
Also be sure to use separate power supplies for the 24-VDC output power supply and the common input power supply.

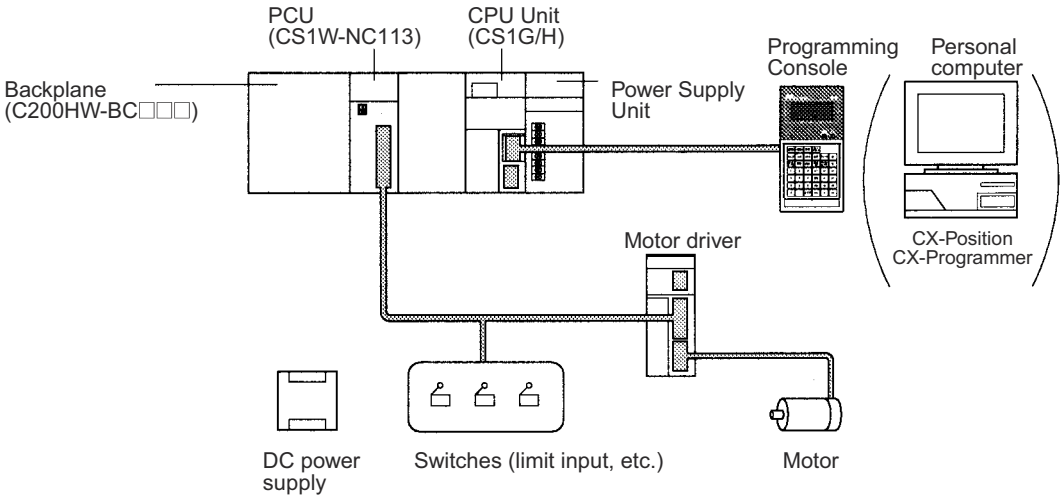

4. Data Memory Settings (Refer to *SECTION 4 Data Areas* and *SECTION 5 Transferring and Saving Data*.)
   Refer to the data memory settings for each program example and then set the values for the DM Area. When the settings have been completed, enable the settings by re-connecting the power or restarting.
5. Setting the Data (Refer to *SECTION 4 Data Areas* and *SECTION 5 Transferring and Saving Data*.)
   Refer to the data settings for each program example and then set values for the parameters, sequences, speeds, positions, acceleration and deceleration, dwell times and zones.
6. Inputting the Program
   Refer to the program in each program example and then use tools such as

the CX-Programmer, Programming Console and so on to input the ladder program to the CPU Unit.

7. Checking
   Check the operation of each program example.

List of Program Examples

Name		Page
Memory operation	Checking positioning operations	266
	Repeat operation	271
	Cancelling positioning	275
Direct operation	Positioning with positions in the DM Area	281
	Inching	284
Linear interpolation	Two-axis linear interpolation	287
Origin search	Origin search using limit input	293
Override	Changing speed during pulse output	296
Transferring and saving data	Copying data	299

10-2 Memory Operation

10-2-1 Checking Positioning Operations

Overview

- The operation of each positioning sequence can be tested using INDEPENDENT START under memory operation.
- Positioning is executed one positioning sequence at a time with INDEPENDENT START, according to the contents of each sequence.
- When using INDEPENDENT START, positioning is stopped after the completion of each positioning sequence, without reference to the completion code set for that sequence.

Operation Examples

The following examples show positioning tests on positioning sequences with completion codes set either to automatic or continuous.

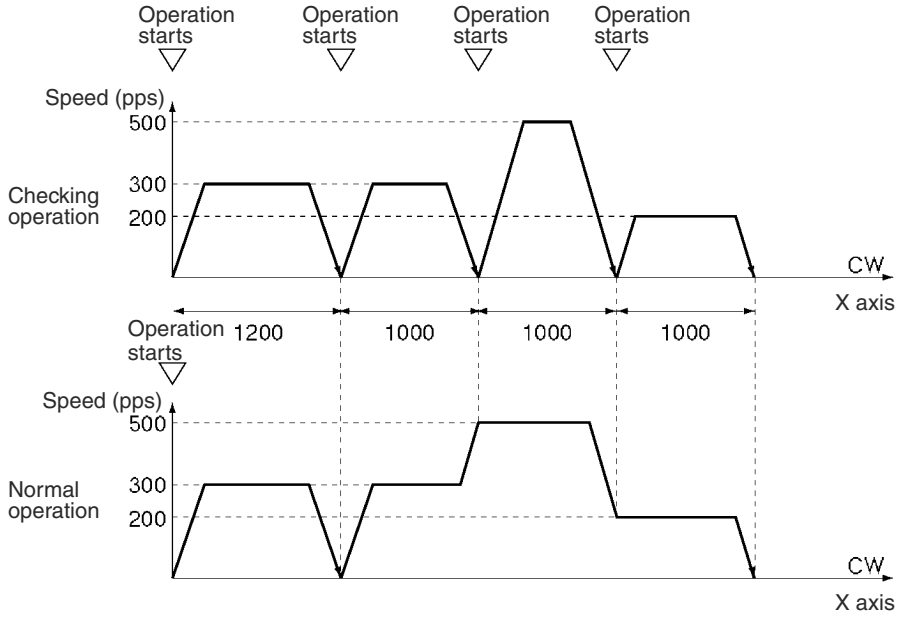

When the Operation Checking Switch is ON

1,2,3...

1. When the operation start switch is turned ON, the program outputs 1,200 pulses CW on the X axis and stops.
2. When the operation start switch is turned ON, the program outputs 1,000 pulses CW on the X axis and stops.
   When the operation start switch is again turned ON, the program outputs 1,000 pulses CW on the X axis and stops.
   When the operation start switch is again turned ON, the program outputs 1,000 pulses CW on the X axis and stops.

When the Operation Checking Switch is OFF

1,2,3...

1. When the operation start switch is turned ON, the program outputs 1,000 pulses CW on the X axis and stops, and immediately moves to the positioning in the next step (2, below). (Automatic)
2. Using continuous positioning, the program outputs 3000 pulses CW on the X axis and stops. (Continuous)

Setting the CPU

Unit number: Unit #0
PCU used: NC113

Data Memory Settings

DM	Setting	Contents of setting	DM	Setting	Contents of setting
D20000	000D	Sets the operating data area to D00500 (1F4 Hex) onwards.	D20016	0000	Backlash compensation (default setting)
D20001	01F4		D20017	0000	Backlash compensation speed (default setting)
D20002	0001	Specifies that the axis parameters in the area starting from D20004 will be used for all axes.	D20018	0000	
D20003	0000	Reserved	D20019	0000	Acceleration/Deceleration curve: trapezoid (default setting)
D20004	0060	I/O settings (default setting)	D20020	000A	Origin search acceleration time (0 to maximum speed): 10 ms (A Hex)
D20005	000#	Operation mode (see note)	D20021	0000	
D20006	01F4	Maximum speed: 500 pps (1F4 Hex)	D20022	000A	Origin search deceleration time (maximum speed to 0): 10 ms (A Hex)
D20007	0000		D20023	0000	
D20008	0000	Initial speed (default setting)	D20024	270F	Positioning monitor time (default setting)
D20009	0000		D20025	0001	CCW software limit (default setting)
D20010	01F4	Origin search high speed: 500 pps (1F4 Hex)	D20026	C000	
D20011	0000		D20027	FFFF	CW software limit (default setting)
D20012	0064	Origin search proximity speed: 100 pps (64 Hex)	D20028	3FFF	
D20013	0000		D20029	0000	Reserved
D20014	0000	Origin compensation (default setting)	D20030	0000	Reserved
D20015	0000		D20031	0000	Initial pulse designation (default setting)

Note Set the operation mode (by setting an appropriate value for # in the table above) according to the driver used.

Designation of the Operating Data Area

The operating data area is allocated to D00500 through D00523 according to the data memory settings.

Data Settings

Axis Parameters

The values for D20004 onwards are transferred when the power is turned ON (or at restart).

Positioning Sequences

Address	Setting	Contents of setting	
1000	1011	Sequence #0	X axis designation Output code: 0 Position designation: relative Completion code: automatic Dwell time #0 Acceleration time #0 Deceleration time #0 Initial speed #3 Target speed #1
1001	0000		
1002	0301		
1003	1012	Sequence #1	X axis designation Output code: 0 Position designation: relative Completion code: continuous Dwell time #0 Acceleration time #0 Deceleration time #0 Initial speed #3 Target speed #1
1004	0000		
1005	0301		
1006	1012	Sequence #2	X axis designation Output code: 0 Position designation: relative Completion code: continuous Dwell time #0 Acceleration time #0 Deceleration time #0 Initial speed #3 Target speed #2
1007	0000		
1008	0302		
1009	1013	Sequence #3	X axis designation Output code: 0 Position designation: relative Completion code: bank end Dwell time #0 Acceleration time #0 Deceleration time #0 Initial speed #3 Target speed #0
100A	0000		
100B	0300		

Note Addresses other than the above should be set to their default settings (0).

Speed

Address	Setting	Contents of setting	
112C	00C8	Speed #0	200 pps (C8 Hex)
112D	0000		
112E	012C	Speed #1	300 pps (12C Hex)
112F	0000		
1130	01F4	Speed #2	500 pps (1F4 Hex)
1131	0000		
1132	0000	Speed #3	0 pps (0 Hex)
1133	0000		

Note Addresses other than the above should be set to their default settings (0).

Positions

Address	Setting	Contents of setting	
11F4	04B0	Position #0	1,200 pulses (4B0 Hex)
11F5	0000		
11F6	03E8	Position #1	1,000 pulses (3E8 Hex)
11F7	0000		
11F8	03E8	Position #2	1,000 pulses (3E8 Hex)
11F9	0000		
11FA	03E8	Position #3	1,000 pulses (3E8 Hex)
11FB	0000		

Note Addresses other than the above should be set to their default settings (0).

Acceleration and Deceleration Times

The origin search acceleration and deceleration times will be used for acceleration and deceleration and so this data needs to be set completely to the default settings (0).

Dwell Times

Dwell times are not used in these programs, so this data area needs to be set completely to the default settings (0).

Zones

Zones are not used in these programs, so this data area needs to be set completely to the default settings (0).

Program

W030 is used as a work word.

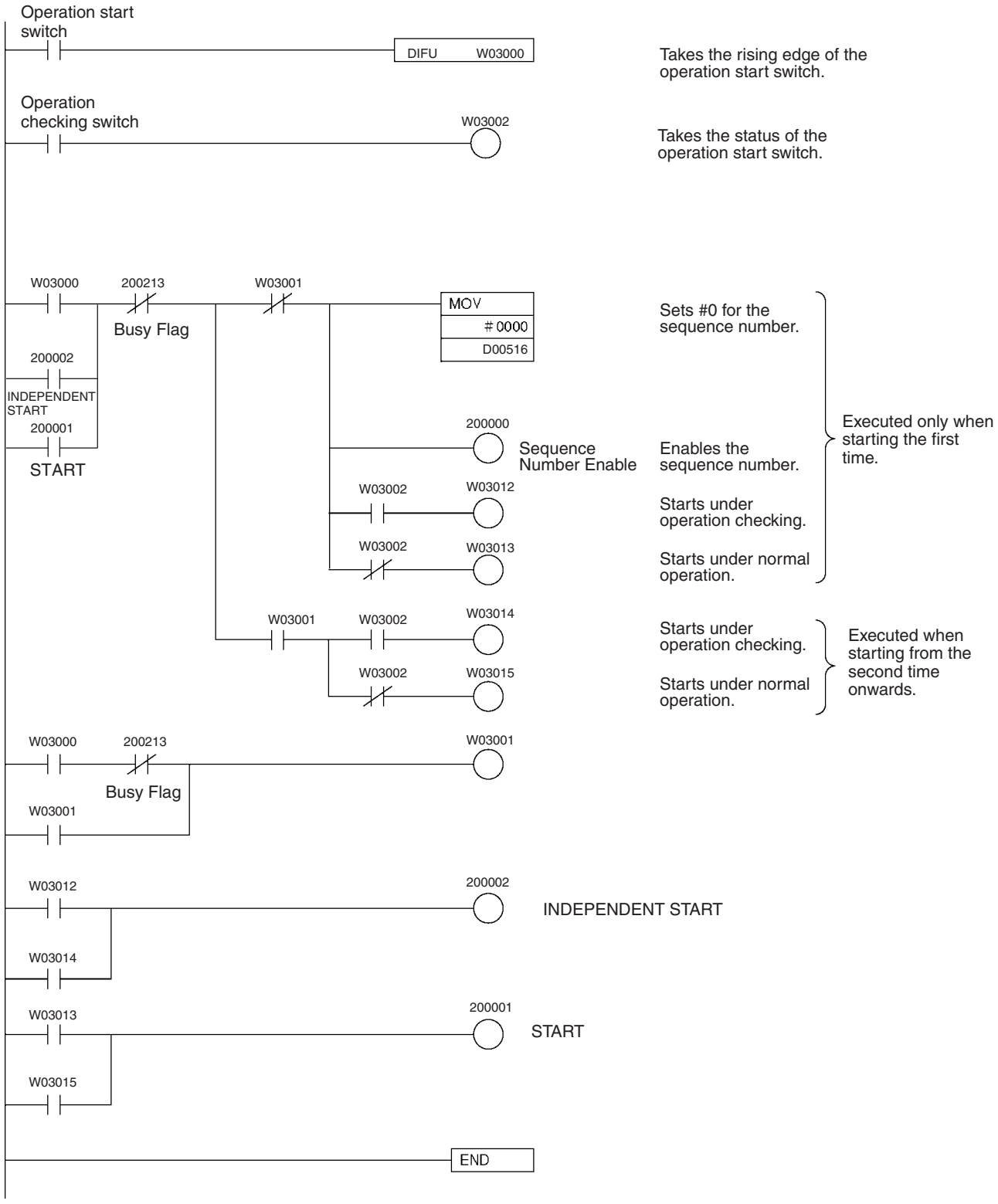

10-2-2 Repeat Operation

Overview

- Any operation can be executed repeatedly under memory operation using the bank end completion code.
- When the completion code of any positioning sequence is set to bank end, positioning is stopped after the operation for that sequence has been completed.
- When operation is started again, it returns to the sequence number that was previously enabled and executes the positioning.

Operation Example

The following is an example of repeating a particular operation.

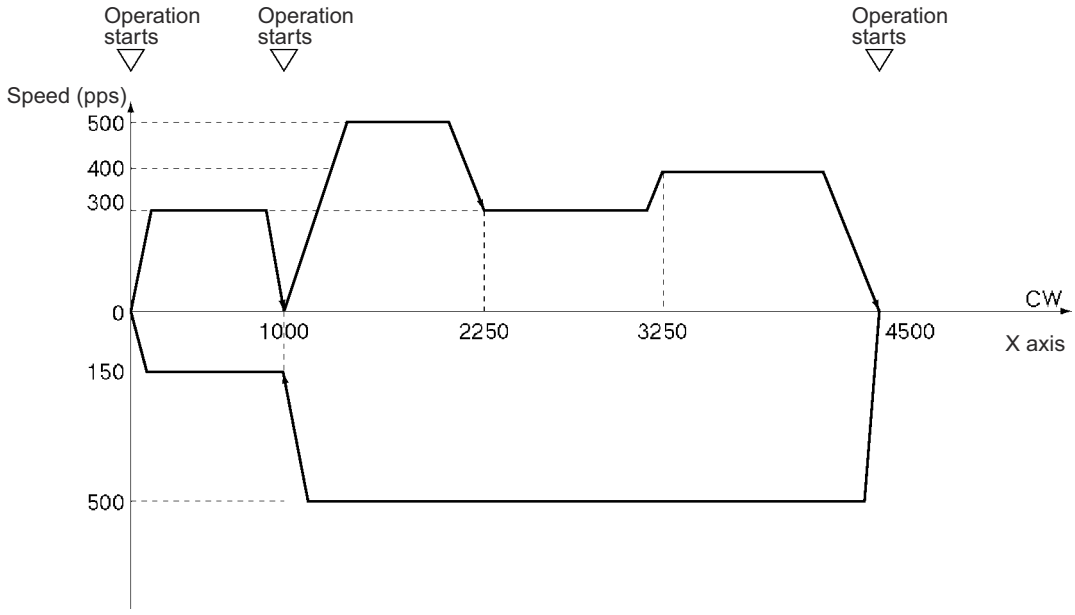

1,2,3...

1. When the operation start switch is turned ON at the origin, the program outputs 1,000 pulses CW on the X axis and stops. (Independent)
   (First, set the origin to “0” either by performing an origin search or by executing PRESENT POSITION PRESET.)
2. When the operation start switch turns ON, positioning is executed using the continuous completion code, and the program positions to 4,500 pulses CW on the X axis and stops.
3. When the operation start switch turns ON, positioning is executed using the continuous completion code. The program positions to the X axis origin and stops.
4. When the operation start switch turns ON, the operations in steps 1 to 3 above are repeated.

Setting the PCU

Unit number: Unit #0
PCU used: NC113

Data Memory Settings

DM	Setting	Contents of setting	DM	Setting	Contents of setting
D20000	000D	Sets the operating data area to D00500 (1F4 Hex) onwards.	D20016	0000	Backlash compensation (default setting)
D20001	01F4		D20017	0000	Backlash compensation speed (default setting)
D20002	0001	Specifies that the axis parameters in the area starting from D20004 will be used for all axes.	D20018	0000	
D20003	0000	Reserved	D20019	0000	Acceleration/Deceleration curve: trapezoid (default setting)
D20004	0060	I/O settings (default settings)	D20020	000A	Origin search acceleration time (0 to maximum speed): 10 ms (A Hex)
D20005	000#	Operation mode (see note)	D20021	0000	
D20006	01F4	Maximum speed: 500 pps (1F4 Hex)	D20022	000A	Origin search acceleration time (maximum speed to 0): 10 ms (A Hex)
D20007	0000		D20023	0000	
D20008	0000	Initial speed (default setting)	D20024	270F	Positioning monitor time (default setting)
D20009	0000		D20025	0001	CCW software limit (default setting)
D20010	01F4	Origin search high speed: 500 pps (1F4 Hex)	D20026	C000	
D20011	0000		D20027	FFFF	CW software limit (default setting)
D20012	0064	Origin search proximity speed: 100 pps (64 Hex)	D20028	3FFF	
D20013	0000		D20029	0000	Reserved
D20014	0000	Origin compensation (default setting)	D20030	0000	Reserved
D20015	0000		D20031	0000	Initial pulse designation (default setting)

Note Set the operation mode (by setting an appropriate value for # in the table above) according to the driver used.

Designation of the Operating Data Area

The operating data area is allocated to D00500 through D00523 by the data memory settings.

Data Settings

Axis Parameters

The values for D20004 onwards are transferred when the power is turned ON (or at restart).

Positioning Sequences

Address	Setting	Contents of settings	
1000	1000	Sequence #0	X axis designation Output code: 0 Position designation: absolute Completion code: terminating Dwell time #0 Acceleration time #1 Deceleration time #1 Initial speed #4 Target speed #1
1001	0011		
1002	0401		
1003	1002	Sequence #1	X axis designation Output code: 0 Position designation: absolute Completion code: continuous Dwell time #0 Acceleration time #2 Deceleration time #2 Initial speed #4 Target speed #3
1004	0022		
1005	0403		
1006	1002	Sequence #2	X axis designation Output code: 0 Position designation: absolute Completion code: continuous Dwell time #0 Acceleration time #2 Deceleration time #2 Initial speed #4 Target speed #1
1007	0022		
1008	0401		
1009	1000	Sequence #3	X axis designation Output code: 0 Position designation: absolute Completion code: terminating Dwell time #0 Acceleration time #2 Deceleration time #2 Initial speed #4 Target speed #2
100A	0022		
100B	0402		
100C	1002	Sequence #4	X axis designation Output code: 0 Position designation: absolute Completion code: continuous Dwell time #0 Acceleration time #1 Deceleration time #1 Initial speed #4 Target speed #3
100D	0011		
100E	0403		
100F	1003	Sequence #5	X axis designation Output code: 0 Position designation: absolute Completion code: bank end Dwell time #0 Acceleration time #1 Deceleration time #1 Initial speed #4 Target speed #0
1010	0011		
1011	0400		

Note Addresses other than the above should be set to their default settings (0).

Speeds

Address	Setting	Contents of setting	
112C	0096	Speed #0	150 pps (96 Hex)
112D	0000		
112E	012C	Speed #1	300 pps (12C Hex)
112F	0000		
1130	0190	Speed #2	400 pps (190 Hex)
1131	0000		
1132	01F4	Speed #3	500 pps (1F4 Hex)
1133	0000		
1134	0000	Speed #4	0 pps (0 Hex)
1135	0000		

Note Addresses other than the above should be set to their default settings (0).

Positions

Address	Setting	Contents of settings	
11F4	03E8	Position #0	1,000 pulses (3E8 Hex)
11F5	0000		
11F6	08CA	Position #1	2,250 pulses (8CA Hex)
11F7	0000		
11F8	0CB2	Position #2	3,250 pulses (CB2 Hex)
11F9	0000		
11FA	1194	Position #3	4,500 pulses (1194 Hex)
11FB	0000		
11FC	03E8	Position #4	1,000 pulses (3E8 Hex)
11FD	0000		
11FE	0000	Position #5	0 pulses (0 Hex)
11FF	0000		

Note Addresses other than the above should be set to their default settings (0).

Acceleration and Deceleration Times

Address	Setting	Contents of settings	
12BE	0005	Acceleration time #1	5 ms (5 Hex)
12BF	0000		
12C0	0014	Acceleration time #2	20 ms (14 Hex)
12C1	0000		
12D2	0005	Deceleration time #1	5 ms (5 Hex)
12D3	0000		
12D4	0014	Deceleration time #2	20 ms (14 Hex)
12D5	0000		

Note Addresses other than the above should be set to their default settings (0).

Dwell Times

Dwell times are not used in these programs, so this data area needs to be set completely to the default settings (0).

Zones

Zones are not used in these programs, so this data area needs to be set completely to the default settings (0).

Program

W030 is used as a work word.

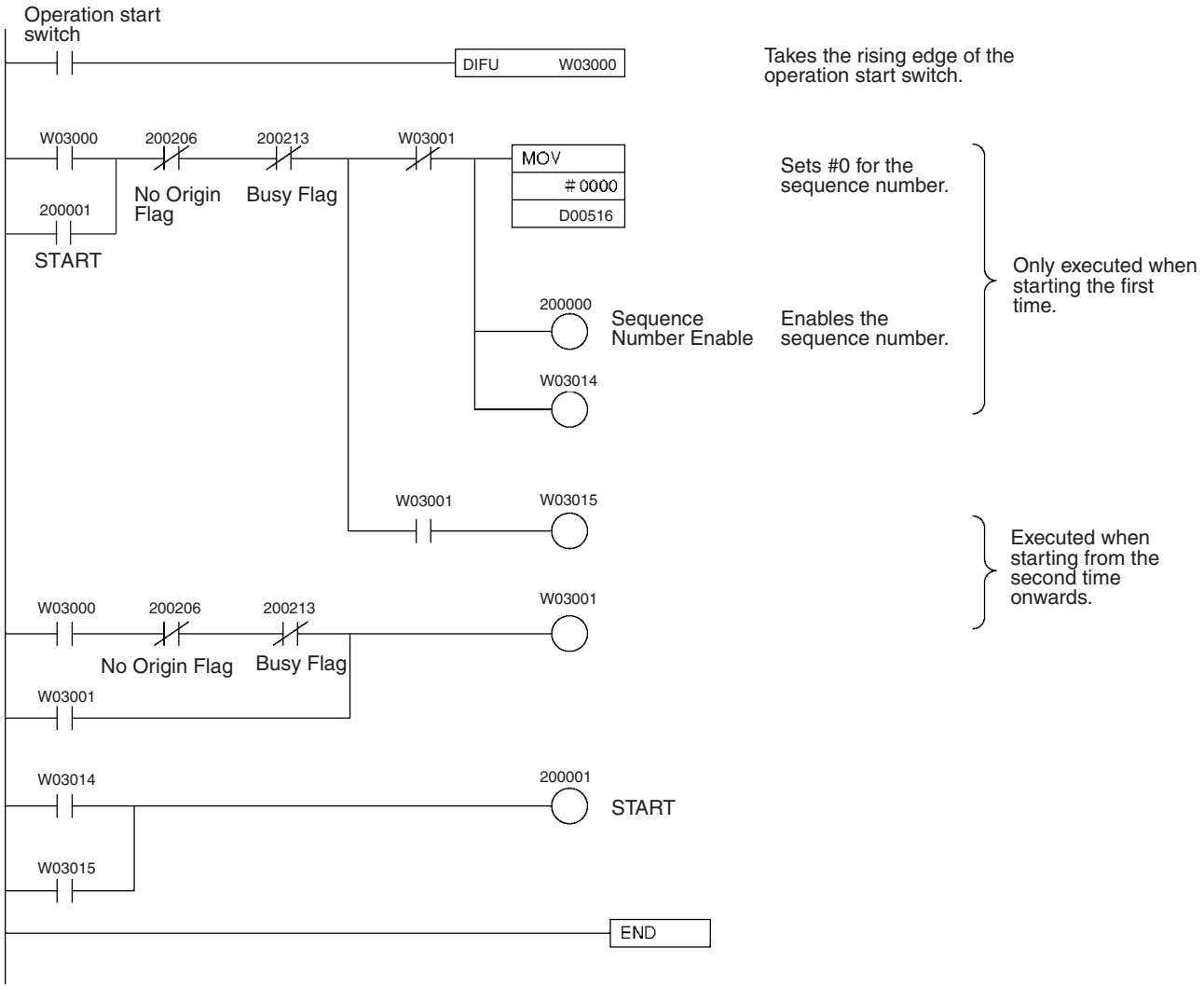

10-2-3 Cancelling Positioning

Overview

- A forced interrupt can be used during memory operation to cancel the current positioning and perform a circumvention in case of an emergency.
- This operation forcibly cancels the current positioning operation and executes positioning from the designated sequence number.
- The pulses currently being output are stopped immediately without deceleration.

Operation Example

In the following example, a forced interrupt is used during positioning to execute a sequence for returning to the origin.

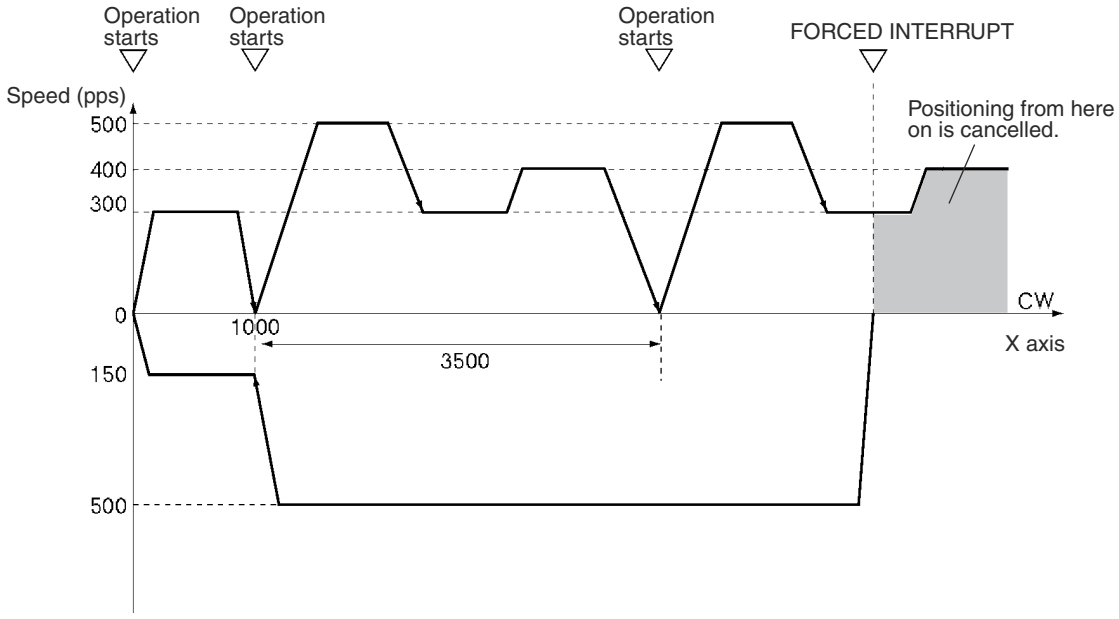

1,2,3...

1. When the operation start switch is turned ON at the origin, the program outputs 1,000 pulses CW on the X axis and stops. (Independent)
   (First, set the origin to "0" either by performing an origin search operation or by executing PRESENT POSITION PRESET.)
2. When the operation start switch turns ON, positioning is executed using the continuous completion code. The program outputs 3,500 pulses CW on the X axis and stops.
3. When the operation start switch is turned ON, the procedure in 2 above is repeated.
4. When the FORCED INTERRUPT switch is turned ON during the above positioning operation, that operation is immediately canceled and positioning is executed to the absolute-coordinates origin.

Setting the PCU

Unit number: Unit #0
PCU used: NC113

Data Memory Settings

DM	Setting	Contents of setting	DM	Setting	Contents of setting
D20000	000D	Sets the operating data area to D00500 (1F4 Hex) onwards.	D20016	0000	Backlash compensation (default setting)
D20001	01F4		D20017	0000	Backlash compensation speed (default setting)
D20002	0001	Specifies that the axis parameters in the area starting from D20004 will be used for all axes.	D20018	0000	
D20003	0000	Reserved	D20019	0000	Acceleration/Deceleration curve: trapezoid (default setting)
D20004	0060	I/O settings (default settings)	D20020	000A	Origin search acceleration time (0 to maximum speed): 10 ms (A Hex)
D20005	000#	Operation mode (see note)	D20021	0000	
D20006	01F4	Maximum speed: 500 pps (1F4 Hex)	D20022	000A	Origin search acceleration time (maximum speed to 0): 10 ms (A Hex)
D20007	0000		D20023	0000	
D20008	0000	Initial speed (default setting)	D20024	270F	Positioning monitor time (default setting)
D20009	0000		D20025	0001	CCW software limit (default setting)
D20010	01F4	Origin search high speed: 500 pps (1F4 Hex)	D20026	C000	
D20011	0000		D20027	FFFF	CW software limit (default setting)
D20012	0064	Origin search proximity speed: 100 pps (64 Hex)	D20028	3FFF	
D20013	0000		D20029	0000	Reserved
D20014	0000	Origin compensation (default setting)	D20030	0000	Reserved
D20015	0000		D20031	0000	Initial pulse designation (default setting)

Note Set the operation mode (by setting an appropriate value for # in the table above) according to the driver used.

Designation of the Operating Data Area

The operating data area is allocated to D00500 through D00523 by the data memory settings. No prior settings are required for the operating data area because the data is be set in the program.

Data Settings

Axis Parameters

The values for D20004 onwards are transferred when the power is turned ON (or at restart).

Positioning Sequences

Address	Setting	Contents of setting	
1000	1000	Sequence #0	X axis designation Output code: 0 Position designation: absolute Completion code: terminating Dwell time #0 Acceleration time #1 Deceleration time #1 Initial speed #4 Target speed #1
1001	0011		
1002	0401		
1003	1012	Sequence #1	X axis designation Output code: 0 Position designation: relative Completion code: continuous Dwell time #0 Acceleration time #2 Deceleration time #2 Initial speed #4 Target speed #3
1004	0022		
1005	0403		
1006	1012	Sequence #2	X axis designation Output code: 0 Position designation: relative Completion code: continuous Dwell time #0 Acceleration time #2 Deceleration time #2 Initial speed #4 Target speed #1
1007	0022		
1008	0401		
1009	1013	Sequence #3	X axis designation Output code: 0 Position designation: relative Completion code: bank end Dwell time #0 Acceleration time #2 Deceleration time #2 Initial speed #4 Target speed #2
100A	0022		
100B	0402		
100C	1002	Sequence #4	X axis designation Output code: 0 Position designation: absolute Completion code: continuous Dwell time #0 Acceleration time #1 Deceleration time #1 Initial speed #4 Target speed #3
100D	0011		
100E	0403		
100F	1003	Sequence #5	X axis designation Output code: 0 Position designation: absolute Completion code: bank end Dwell time #0 Acceleration time #1 Deceleration time #1 Initial speed #4 Target speed #0
1010	0011		
1011	0400		

Note Addresses other than the above should be set to their default settings (0).

Speed

Address	Setting	Contents of setting	
112C	0096	Speed #0	150 pps (96 Hex)
112D	0000		
112E	012C	Speed #1	300 pps (12C Hex)
112F	0000		
1130	0190	Speed #2	400 pps (190 Hex)
1131	0000		
1132	01F4	Speed #3	500 pps (1F4 Hex)
1133	0000		
1134	0000	Speed #4	0 pps (0 Hex)
1135	0000		

Note Addresses other than the above should be set to their default settings (0).

Positions

Address	Setting	Contents of settings	
11F4	03E8	Position #0	1,000 pulses (3E8 Hex)
11F5	0000		
11F6	05DC	Position #1	1,500 pulses (5DC Hex)
F11F7	0000		
11F8	03E8	Position #2	1,000 pulses (3E8 Hex)
11F9	0000		
11FA	03E8	Position #3	1,000 pulses (3E8 Hex)
11FB	0000		
11FC	03E8	Position #4	1,000 pulses (3E8 Hex)
11FD	000		
11FE	000	Position #5	0 pulses (0 Hex)
11FF	000		

Note Addresses other than the above should be set to their default settings (0).

Acceleration and Deceleration Times

Address	Setting	Contents of settings	
12BE	0005	Acceleration time #1	5 ms (5 Hex)
12BF	0000		
12C0	0014	Acceleration time #2	20 ms (14 Hex)
12C1	0000		
12D2	0005	Deceleration time #1	5 ms (5 Hex)
12D3	0000		
12D4	0014	Deceleration time #2	20 ms (14 Hex)
12D5	0000		

Note Addresses other than the above should be set to their default settings (0).

Dwell Times

Dwell times are not used in these programs, so this data area needs to be set completely to the default settings (0).

Zones

Zones are not used in these programs, so this data area needs to be set completely to the default settings (0).

Program

W030 is used as a work word.

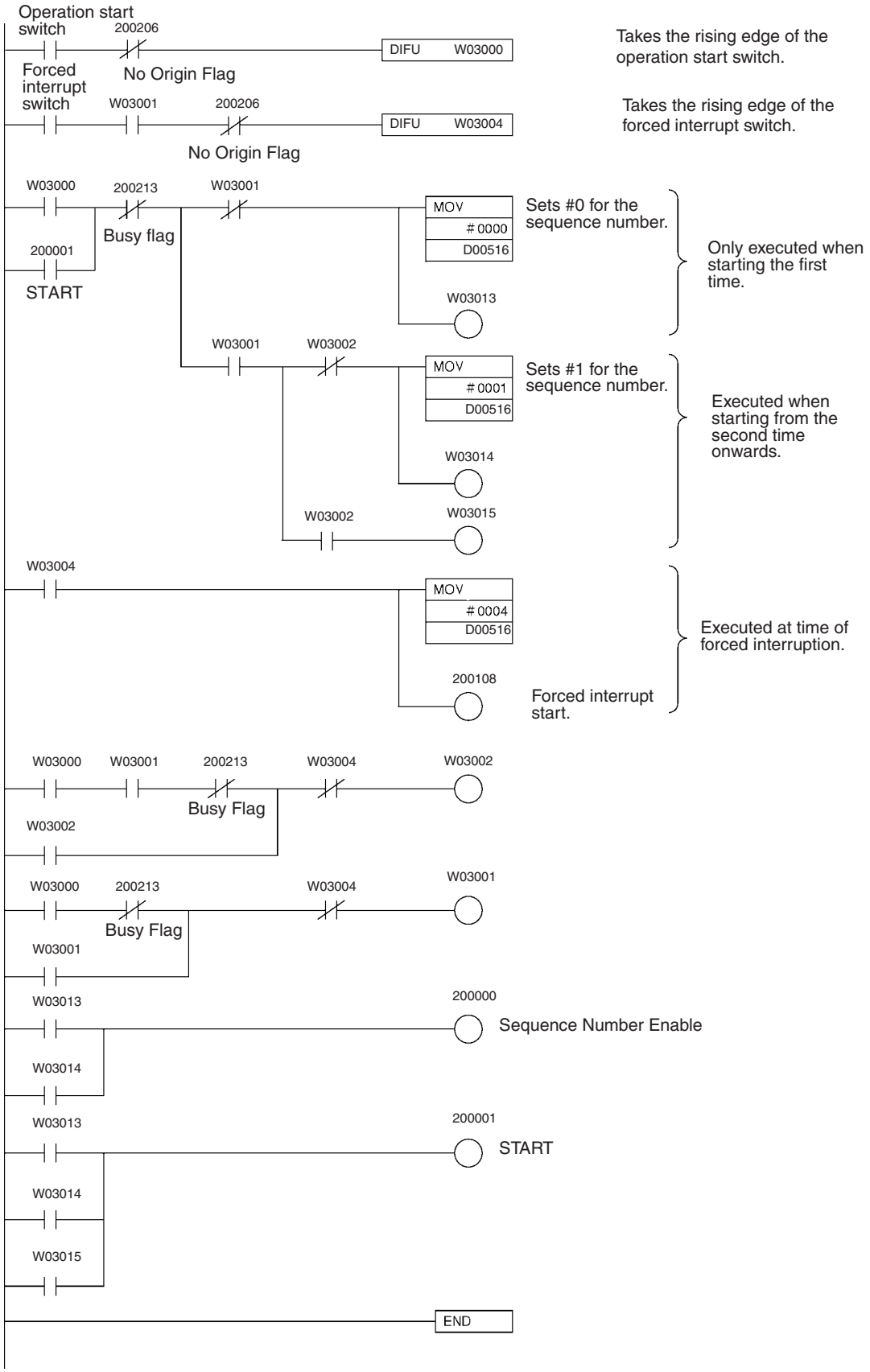

10-3 Direct Operation

10-3-1 Positioning with Positions in the DM Area

Overview

- A series of positioning operations can be executed by sequential transmission of DM data with direct operation.
- Positioning is executed according to the designations set in the operating data area.
- Whether positions that have been set are regarded as absolute or relative is determined by whether positioning is started by the ABSOLUTE MOVEMENT bit or the RELATIVE MOVEMENT bit.

Operation Example

The following example shows positioning by ABSOLUTE MOVEMENT command using positions on the DM.

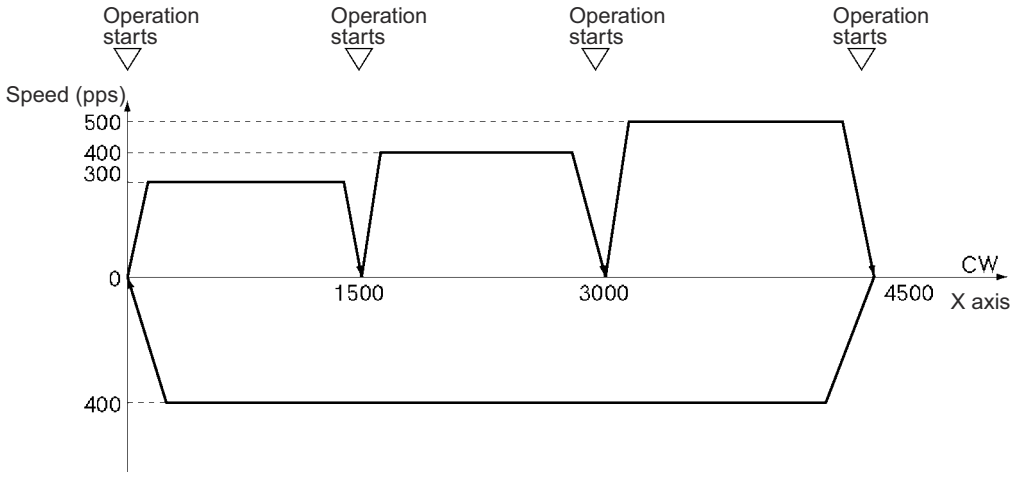

1,2,3...

1. When the operation start switch is turned ON at the origin, positioning is executed to 1500 in the CW direction on the X axis.
2. Subsequently, as the switch turns ON each time, positioning is executed to 3000 in the CW direction on the X axis and then to 4500 in the CW direction on the X axis, and then returns to the origin and stops. (First, set the origin to “0” either by performing an origin search or by executing PRESENT POSITION PRESET.)

Setting the PCU

Unit number: Unit #0
PCU used: NC113

Data Memory Settings

DM	Setting	Contents of setting	DM	Setting	Contents of setting
D20000	000D	Sets the operating data area to D00500 (1F4 Hex) onwards.	D20016	0000	Backlash compensation (default setting)
D20001	01F4		D20017	0000	Backlash compensation speed (default setting)
D20002	0001	Specifies that the axis parameters in the area starting from D20004 will be used for all axes.	D20018	0000	
D20003	0000	Reserved	D20019	0000	Acceleration/Deceleration curve: trapezoid (default setting)
D20004	0060	I/O settings (default settings)	D20020	000A	Origin search acceleration time (0 to maximum speed): 10 ms (A Hex)
D20005	000#	Operation mode (see note)	D20021	0000	
D20006	01F4	Maximum speed: 500 pps (1F4 Hex)	D20022	000A	Origin search acceleration time (maximum speed to 0): 10 ms (A Hex)
D20007	0000		D20023	0000	
D20008	0000	Initial speed (default setting)	D20024	270F	Positioning monitor time (default setting)
D20009	0000		D20025	0001	CCW software limit (default setting)
D20010	01F4	Origin search high speed: 500 pps (1F4 Hex)	D20026	C000	
D20011	0000		D20027	FFFF	CW software limit (default setting)
D20012	0064	Origin search proximity speed: 100 pps (64 Hex)	D20028	3FFF	
D20013	0000		D20029	0000	Reserved
D20014	0000	Origin compensation (default setting)	D20030	0000	Reserved
D20015	0000		D20031	0000	Initial pulse designation (default setting)

Note Set the operation mode (by setting an appropriate value for # in the table above) according to the driver used.

Designation of the Operating Data Area

The operating data area is allocated to D00500 through D00523 by the data memory settings. No prior settings are required for the operating data area because the data is be set in the program.

Data Settings

Axis Parameters The values for D20004 onwards are transferred when the power is turned ON (or at restart).

Positioning Sequences This data area is not used with direct operation. It should be left entirely at the default settings (0).

Speeds This data area is not used with direct operation. It should be left entirely at the default settings (0).

Positions This data area is not used with direct operation. It should be left entirely at the default settings (0).

Acceleration and Deceleration Times This data area is not used with this program example. It should be left entirely at the default settings (0).

Dwell Times Dwell times are not used in these programs, so this data area needs to be set completely to the default settings (0).

Zones Zones are not used in these programs, so this data area needs to be set completely to the default settings (0).

DM Area

D00000 through D00031 are used in this program example, and the following positions are set in this area.

DM	Setting	Contents of setting	DM	Setting	Contents of setting
D00000	05DC	Position: 1,500 pulses (5DC Hex)	D00016	1194	Position: 4,500 pulses (1194 Hex)
D00001	0000		D00017	0000	
D00002	012C	Speed: 300 pps (12C Hex)	D00018	01F4	Speed: 500 pps (1F4 Hex)
D00003	0000		D00019	0000	
D00004	0005	Acceleration time: 5 ms (5 Hex)	D00020	0005	Acceleration time: 5 ms (5 Hex)
D00005	0000		D00021	0000	
D00006	0005	Deceleration time: 5 ms (5 Hex)	D00022	0005	Deceleration time: 5 ms (5 Hex)
D00007	0000		D00023	0000	
D00008	0BB8	Position: 3,000 pulses (BB8 Hex)	D00024	0000	Position: 0 pulses (0 Hex)
D00009	0000		D00025	0000	
D00010	0190	Speed: 400 pps (190 Hex)	D00026	0190	Speed: 400 pps (190 Hex)
D00011	0000		D00027	0000	
D00012	0005	Acceleration time: 5 ms (5 Hex)	D00028	0014	Acceleration time: 20 ms (14 Hex)
D00013	0000		D00029	0000	
D00014	0005	Deceleration time: 5 ms (5 Hex)	D00030	0014	Deceleration time: 20 ms (14 Hex)
D00015	0000		D00031	0000	

Program

W030 is used as a work word.

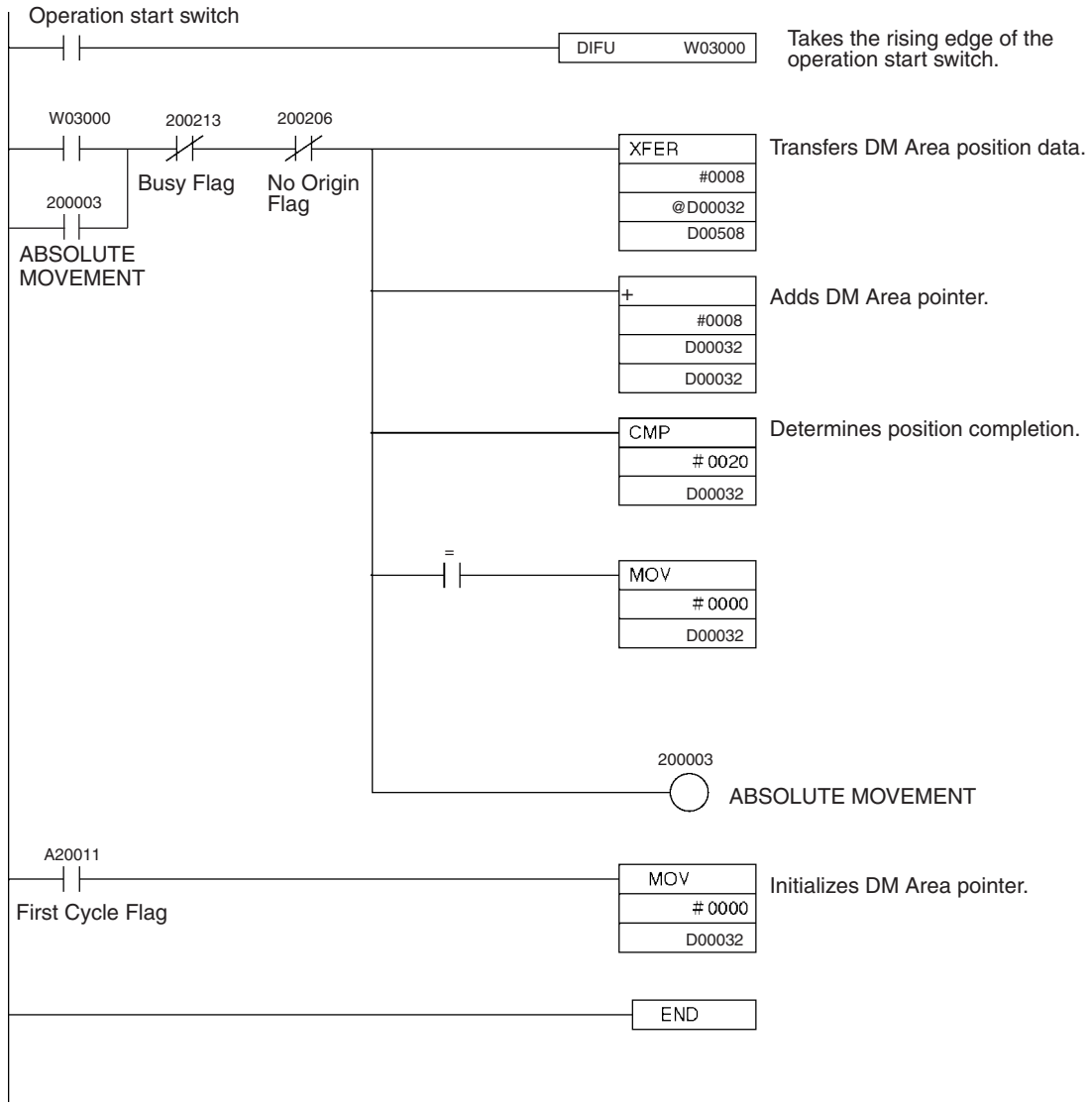

10-3-2 Inching

Overview

- Can be applied to manual operation (inching) using Relative Movement under direct operation.
- Direct operation sets the data required for each positioning operation and starts the positioning, so this simplifies positioning commands from the PLC ladder program.

Operation Example

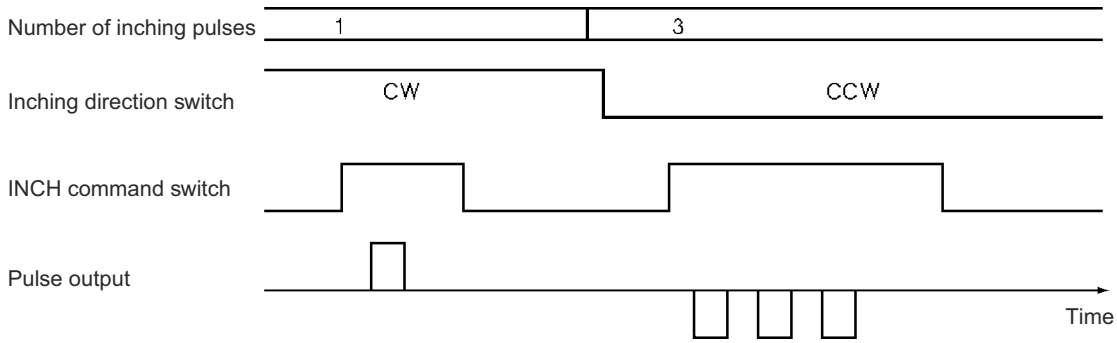

1,2,3...

1. Set the number of inching pulses and the inching direction.
2. When the INCH command switch is turned ON, the designated number of pulses are output in the specified direction on the X axis, and the positioning is stopped.
   (The pulse output speed at this time is the speed specified for direct operation.)

Setting the PCU

Unit number: Unit #0
PCU used: NC113

Data Memory Settings

DM	Setting	Contents of setting	DM	Setting	Contents of setting
D20000	000D	Sets the operating data area to D00500 (1F4 Hex) onwards.	D20016	0000	Backlash compensation (default setting)
D20001	01F4		D20017	0000	Backlash compensation speed (default setting)
D20002	0001	Specifies that the axis parameters in the area starting from D20004 will be used for all axes.	D20018	0000	
D20003	0000	Reserved	D20019	0000	Acceleration/Deceleration curve: trapezoid (default setting)
D20004	0060	I/O settings (default settings)	D20020	000A	Origin search acceleration time (0 to maximum speed): 10 ms (A Hex)
D20005	000#	Operation mode (see note)	D20021	0000	
D20006	01F4	Maximum speed: 500 pps (1F4 Hex)	D20022	000A	Origin search acceleration time (maximum speed to 0): 10 ms (A Hex)
D20007	0000		D20023	0000	
D20008	0000	Initial speed (default setting)	D20024	270F	Positioning monitor time (default setting)
D20009	0000		D20025	0001	CCW software limit (default setting)
D20010	01F4	Origin search high speed: 500 pps (1F4 Hex)	D20026	C000	
D20011	0000		D20027	FFFF	CW software limit (default setting)
D20012	0064	Origin search proximity speed: 100 pps (64 Hex)	D20028	3FFF	
D20013	0000		D20029	0000	Reserved
D20014	0000	Origin compensation (default setting)	D20030	0000	Reserved
D20015	0000		D20031	0000	Initial pulse designation (default setting)

Note Set the operation mode (by setting an appropriate value for # in the table above) according to the driver used.

Designation of the Operating Data Area

The operating data area is allocated to D00500 through D00523 by the data memory settings. No prior settings are needed for the operating data area because the data is set in the program.

Data Settings

Axis Parameters

The values for D20004 onwards are transferred when the power is turned ON (or at restart).

Positioning Sequences

This data area is not used with direct operation. It should be left entirely at the default settings (0).

Speeds

This data area is not used with direct operation. It should be left entirely at the default settings (0).

Positions

This data area is not used with direct operation. It should be left entirely at the default settings (0).

Acceleration and Deceleration Times

This data area is not used with direct operation. It should be left entirely at the default settings (0).

Dwell Times

Dwell times are not used in these programs, so this data area needs to be set completely to the default settings (0).

Zones

Zones are not used in these programs, so this data area needs to be set completely to the default settings (0).

Program

W030 is used as a work word.

D00000 and D00001: Inching pulses in CW direction (set positive value)
D00002 and D00003: Inching pulses in CCW direction (set negative value)

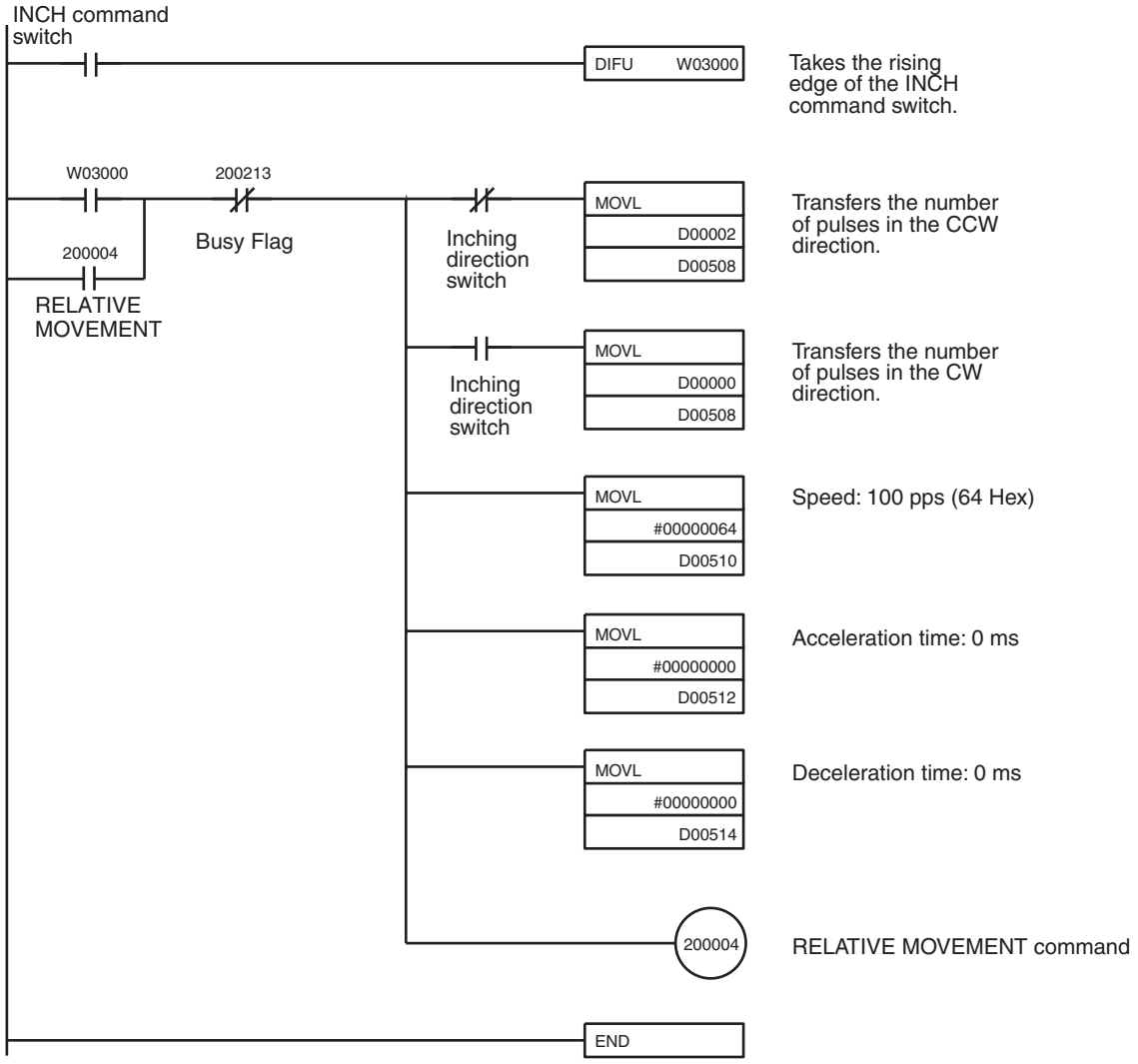

10-4 Linear Interpolation

10-4-1 Two-axis Linear Interpolation

Overview

- Used for carrying out positioning on multiple active axes.
- The only interpolation method available is linear interpolation.
- The positioning sequence for the active axis designates the axes to be used in interpolation.

Operation Example

In the following example, the program carries out an automatic interpolation operation, then returns to the origin and stops.

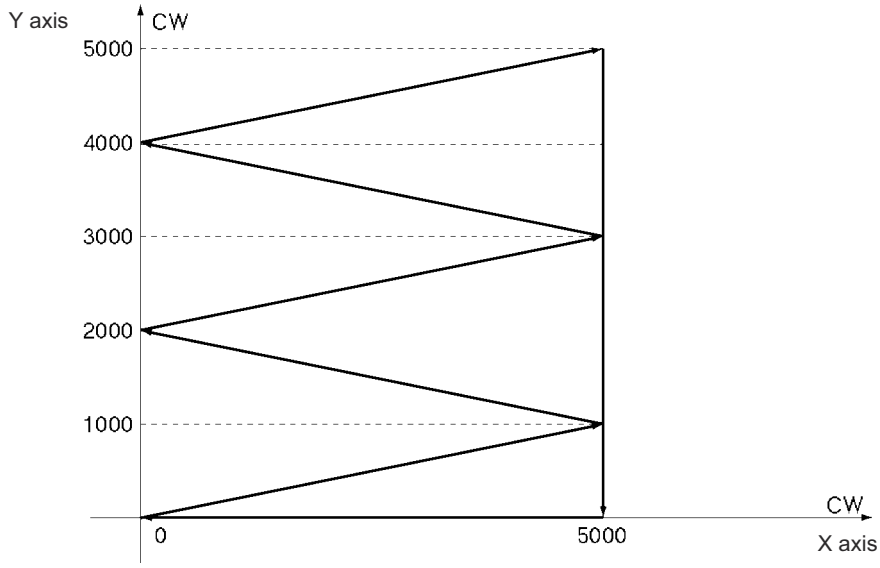

When the operation start switch is turned ON, the following positioning is automatically executed in the given order, using linear interpolation, and then positioning is stopped.

(X,Y) = (5000, 1000) → (0, 2000) → (5000, 3000) → (0, 4000) → (5000, 5000) → (5000, 0) → (0, 0)

The interpolation speed at this time is 500 pps.
(Set the origin of both the X and Y axes beforehand to “0” by either conducting an origin search or executing PRESENT POSITION PRESET).

Setting the PCU

Unit number: Unit #0
PCU used: NC213

Data Memory Settings

DM	Setting	Contents of setting	DM	Setting	Contents of setting
D20000	000D	Sets the operating data area to D00500 (1F4 Hex) onwards.	D20032	0060	I/O settings (default settings)
D20001	01F4		D20033	0000	Operation mode
D20002	0001	Specifies that the axis parameters in the area starting from D20004 will be used for all axes.	D20034	01F4	Maximum speed: 500 pps (1F4 Hex)
D20003	0000	Reserved	D20035	0000	
D20004	0060	I/O settings (default settings)	D20036	0000	Initial speed (default setting)
D20005	000#	Operation mode (see note)	D20037	0000	
D20006	01F4	Maximum speed: 500 pps (1F4 Hex)	D20038	01F4	Origin search high speed: 500 pps (1F4 Hex)
D20007	0000		D20039	0000	
D20008	0000	Initial speed (default setting)	D20040	0064	Origin search proximity speed: 100 pps (64 Hex)
D20009	0000		D20041	0000	
D20010	01F4	Origin search high speed: 500 pps (1F4 Hex)	D20042	0000	Origin compensation (default setting)
D20011	0000		D20043	0000	
D20012	0064	Origin search proximity speed: 100 pps (64 Hex)	D20044	0000	Backlash compensation (default setting)
D20013	0000		D20045	0000	Backlash compensation speed (default setting)
D20014	0000	Origin compensation (default setting)	D20046	0000	
D20015	0000		D20047	0000	Acceleration/Deceleration curve: trapezoid (default setting)
D20016	0000	Backlash compensation (default setting)	D20048	000A	Origin search acceleration time (0 to maximum speed): 10 ms (A Hex)
D20017	0000	Backlash compensation speed (default setting)	D20049	0000	
D20018	0000		D20050	000A	Origin search acceleration time (maximum speed to 0): 10 ms (A Hex)
D20019	0000	Acceleration/Deceleration curve: trapezoid (default setting)	D20051	0000	
D20020	000A	Origin search acceleration time (0 to maximum speed): 10 ms (A Hex)	D20052	270F	Positioning monitor time (default setting)
D20021	0000		D20053	0001	CCW software limit (default setting)
D20022	000A	Origin search acceleration time (maximum speed to 0): 10 ms (A Hex)	D20054	C000	
D20023	0000		D20055	FFFF	CW software limit (default setting)
D20024	270F	Positioning monitor time (default setting)	D20056	3FFF	
D20025	0001	CCW software limit (default setting)	D20057	0000	Reserved
D20026	C000		D20058	0000	Reserved
D20027	FFFF	CW software limit (default setting)	D20059	0000	Initial pulse designation (default setting)
D20028	3FFF				
D20029	0000	Reserved			
D20030	0000	Reserved			
D20031	0000	Initial pulse designation (default setting)			

Note Set the operation mode (by setting an appropriate value for # in the table above) according to the driver used.

Designation of the Operating Data Area

The operating data area is allocated to D00500 through D00539 by the data memory settings. In this program example, the operating data area is not set because it is not used.

Data Settings

Axis Parameters

The values for D20004 onwards are transferred when the power is turned ON (or at restart)

Positioning Sequences

Address	Setting	Contents of setting
1000	3001	Sequence #0 X, Y axis designation Output code: 0 Position designation for X axis: absolute Position designation for Y axis: absolute Completion code: automatic Dwell time #0/Acceleration time #0/ deceleration time #0 Initial speed #1/Target speed #0
1001	0000	
1002	0100	
1003	3001	Sequence #1 X, Y axis designation Output code: 0 Position designation for X axis: absolute Position designation for Y axis: absolute Completion code: automatic Dwell time #0 Acceleration time #0 Deceleration time #0 Initial speed #1 Target speed #0
1004	0000	
1005	0100	
1006	3001	Sequence #2 X, Y axis designation Output code: 0 Position designation for X axis: absolute Position designation for Y axis: absolute Completion code: automatic Dwell time #0 Acceleration time #0 Deceleration time #0 Initial speed #1 Target speed #0
1007	0000	
1008	0100	
1009	3001	Sequence #3 X, Y axis designation Output code: 0 Position designation for X axis: absolute Position designation for Y axis: absolute Completion code: automatic Dwell time #0 Acceleration time #0 Deceleration time #0 Initial speed #1 Target speed #0
100A	0000	
100B	0100	
100C	3001	Sequence #4 X, Y axis designation Output code: 0 Position designation for X axis: absolute Position designation for Y axis: absolute Completion code: automatic Dwell time #0 Acceleration time #0 Deceleration time #0 Initial speed #1 Target speed #0
100D	0000	
100E	0100	

Address	Setting	Contents of setting	
100F	3001	Sequence #5	X, Y axis designation Output code: 0 Position designation for X axis: absolute Position designation for Y axis: absolute Completion code: automatic Dwell time #0 Acceleration time #0 Deceleration time #0 Initial speed #1 Target speed #0
1010	0000		
1011	0100		
1012	3003	Sequence #6	X, Y axis designation Output code: 0 Position designation for X axis: absolute Position designation for Y axis: absolute Completion code: bank end Dwell time #0 Acceleration time #0 Deceleration time #0 Initial speed #1 Target speed #0
1013	0000		
1014	0100		

Note Addresses other than the above should be set to their default settings (0).

Speeds

Address	Setting	Contents of setting	
112C	01F4	Speed #0	500 pps (1F4 Hex)
112D	0000		
112E	0000	Speed #1	0 pps (0 Hex)
112F	0000		

Note Addresses other than the above should be set to their default settings (0).

Positions

Address	Setting	Contents of setting	
11F4	1388	Position #0	5000 pulses (1388 Hex)
11F5	0000		
11F6	0000	Position #1	0 pulses (0 Hex)
11F7	0000		
11F8	1388	Position #2	5000 pulses (1388 Hex)
11F9	0000		
11FA	0000	Position #3	0 pulses (0 Hex)
11FB	0000		
11FC	1388	Position #4	5000 pulses (1388 Hex)
11FD	0000		
11FE	1388	Position #5	5000 pulses (1388 Hex)
11FF	0000		
1200	0000	Position #6	0 pulses (0 Hex)
1201	0000		

Note Addresses other than the above should be set to their default settings (0).

Address	Setting	Contents of setting	
21F4	03E8	Position #0	1000 pulses (3E8 Hex)
21F5	0000		
21F6	07D0	Position #1	2000 pulses (7D0 Hex)
21F7	0000		
21F8	0BB8	Position #2	3000 pulses (BB8 Hex)
21F9	0000		
21FA	0FA0	Position #3	4000 pulses (FA0 Hex)
21FB	0000		
21FC	1388	Position #4	5000 pulses (1388 Hex)
21FD	0000		
21FE	0000	Position #5	0 pulses (0 Hex)
21FF	0000		
2200	0000	Position #6	0 pulses (0 Hex)
2201	0000		

Note Addresses other than the above should be set to their default settings (0).

Acceleration and Deceleration Times The origin search acceleration and deceleration times will be used for acceleration and deceleration and so this data needs to be set completely to the default settings (0).

Dwell Times Dwell times are not used in these programs, so this data area needs to be set completely to the default settings (0).

Zones Zones are not used in these programs, so this data area needs to be set completely to the default settings (0).

Program

W030 is used as a work word.

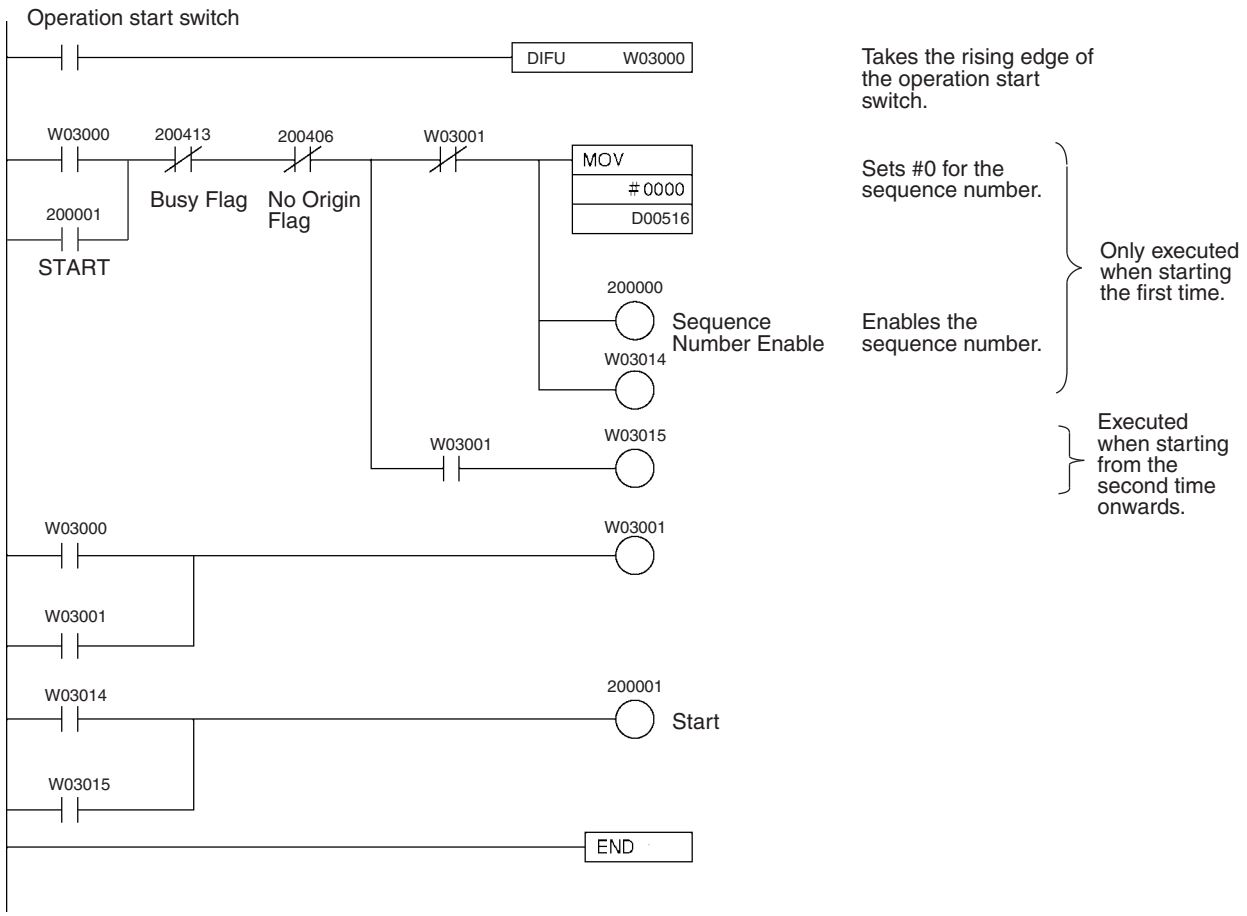

10-5 Origin Search

10-5-1 Origin Search Using Limit Input

Overview

- An origin search can be carried out in single-direction mode using the CW/CCW limit input signal as an origin proximity input signal.
- The origin is established by the first origin input signal after the CW or CCW limit input switch is turned from ON to OFF.

Operation Example

The following example is an origin search operation in single-direction mode using the CCW limit input signal. In this example, the CCW limit input is an N.C. contact. With an N.O. contact, the logic is reversed.

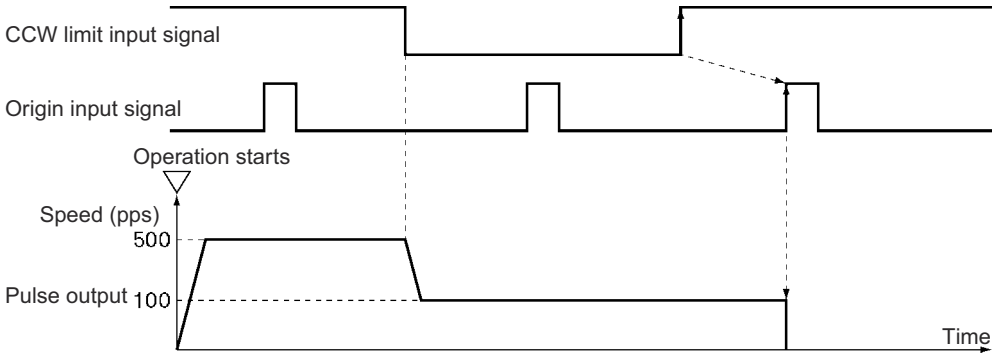

1,2,3...

1. When the operation start switch is turned ON, the origin search starts with an origin search high speed of 500 pps in the CW direction on the X axis.
2. When the CCW limit input signal is turned OFF, the program decelerates to an origin search proximity speed of 100 pps.
3. When the first origin input signal is turned on after the CCW limit input signal is turned ON, the pulse output is stopped and the origin is established.

Setting the PCU

Unit number: Unit #0
PCU used: NC113

Data Memory Settings

DM	Setting	Contents of setting	DM	Setting	Contents of setting
D20000	000D	Sets the operating data area to D00500 (1F4 Hex) onwards.	D20016	0000	Backlash compensation (default setting)
D20001	01F4		D20017	0000	Backlash compensation speed (default setting)
D20002	0001	Specifies that the axis parameters in the area starting from D20004 will be used for all axes.	D20018	0000	
D20003	0000	Reserved	D20019	0000	Acceleration/Deceleration curve: trapezoid (default setting)
D20004	0060	I/O settings (default setting)	D20020	0005	Origin search acceleration time (0 to maximum speed): 5 ms (5 Hex)
D20005	0321	CW limit input used/single-direction mode/mode 1	D20021	0000	
D20006	01F4	Maximum speed: 500 pps (1F4 Hex)	D20022	0005	Origin search deceleration time (maximum speed to 0): 5 ms (5 Hex)
D20007	0000		D20023	0000	
D20008	0000	Initial speed (default setting)	D20024	270F	Positioning monitor time (default setting)
D20009	0000		D20025	0001	CCW software limit (default setting)
D20010	01F4	Origin search high speed: 500 pps (1F4 Hex)	D20026	C000	
D20011	0000		D20027	FFFF	CW software limit (default setting)
D20012	0064	Origin search proximity speed: 100 pps (64 Hex)	D20028	3FFF	
D20013	0000		D20029	0000	Reserved
D20014	0000	Origin compensation (default setting)	D20030	0000	Reserved
D20015	0000		D20031	0000	Initial pulse designation (default setting)

Designation of the Operating Data Area

The operating data area is allocated to D00500 through D00523 by the data memory settings. No prior settings are needed for the operating data area because data is set during programming.

Data Settings

Axis Parameters

The values for D20004 onwards are transferred when the power is turned ON (or at restart).

Positioning Sequences

This data area is not used for origin search. It should be left entirely at the default settings (0).

Speeds

This data area is not used for origin search. It should be left entirely at the default settings (0).

Positions

This data area is not used for origin search. It should be left entirely at the default settings (0).

Acceleration and Deceleration Times

This data area is not used for origin search. It should be left entirely at the default settings (0).

Dwell Times

Dwell times are not used for origin search, so this data area needs to be set completely to the default settings (0).

Zones

Zones are not used for origin search, so this data area needs to be set completely to the default settings (0).

Program

W030 is used as a work word.

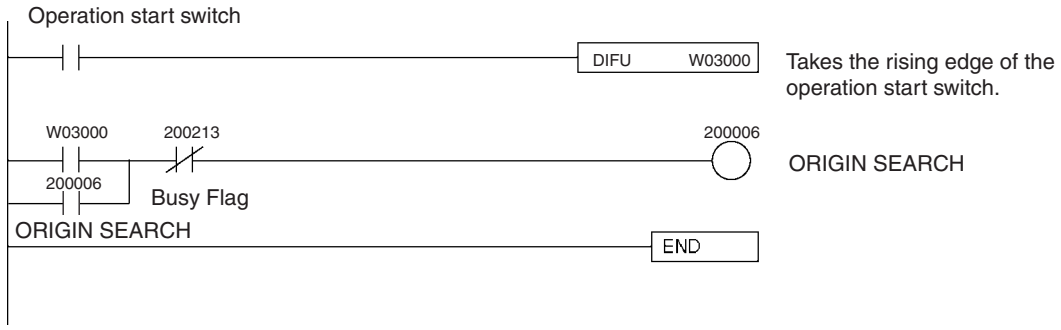

10-6 Override

10-6-1 Changing Speed During Pulse Output

Overview

- Override can be used to change the speed during pulse output.
- The target speed is determined by the override coefficient set in the operating data area.
- In order to use the actual target speed that has been set, either disable the override or set it to 100%.

Operation Example

The following is an example of changing the speed with override during continuous operation.

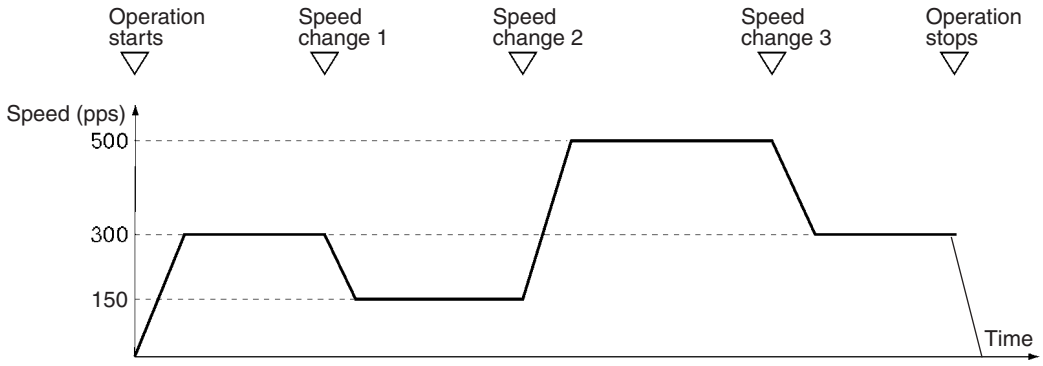

1,2,3...

1. When the operation start switch is turned ON, pulse output is executed at a speed of 300 pps CW on the X axis.
2. When speed change switch 1 is turned ON, the pulse output decelerates to a speed of 150 pps.
3. When speed change switch 2 is turned ON, the pulse output accelerates to a speed of 500 pps.
4. When speed change switch 3 is turned ON, the pulse output decelerates to a speed of 300 pps.
5. When the operation start switch is turned OFF, the output of X axis stops.

Setting the PCU

Unit number: Unit #0
PCU used: NC113

Data Memory Settings

DM	Setting	Contents of setting	DM	Setting	Contents of setting
D20000	000D	Sets the operating data area to D00500 (1F4 Hex) onwards.	D20016	0000	Backlash compensation (default setting)
D20001	01F4		D20017	0000	Backlash compensation speed (default setting)
D20002	0001	Specifies that the axis parameters in the area starting from D20004 will be used for all axes.	D20018	0000	
D20003	0000	Reserved	D20019	0000	Acceleration/Deceleration curve: trapezoid (default setting)
D20004	0060	I/O settings (default setting)	D20020	000A	Origin search acceleration time (0 to maximum speed): 10 ms (A Hex)
D20005	000#	Operation mode (see note)	D20021	0000	
D20006	01F4	Maximum speed: 500 pps (1F4 Hex)	D20022	000A	Origin search deceleration time (maximum speed to 0): 10 ms (A Hex)
D20007	0000		D20023	0000	
D20008	0000	Initial speed (default setting)	D20024	270F	Positioning monitor time (default setting)
D20009	0000		D20025	0001	CCW software limit (default setting)
D20010	01F4	Origin search high speed: 500 pps (1F4 Hex)	D20026	C000	
D20011	0000		D20027	FFFF	CW software limit (default setting)
D20012	0064	Origin search proximity speed: 100 pps (64 Hex)	D20028	3FFF	
D20013	0000		D20029	0000	Reserved
D20014	0000	Origin compensation (default setting)	D20030	0000	Reserved
D20015	0000		D20031	0000	Initial pulse designation (default setting)

Note Set the operation mode (by setting an appropriate value for # in the table above) according to the driver used.

Designation of the Operating Data Area

The operating data area is allocated to D00500 through D00523 by the data memory settings. No prior settings are required for the operating data area because the data is set in the program.

Data Settings

Axis Parameters

The values for D20004 onwards are transferred when the power is turned ON (or at restart).

Positioning Sequences

This data area is not used with direct operation. It should be left entirely at the default settings (0).

Speeds

This data area is not used with direct operation. It should be left entirely at the default settings (0).

Positions

This data area is not used with direct operation. It should be left entirely at the default settings (0).

Acceleration and Deceleration Times

This data area is not used with direct operation. It should be left entirely at the default settings (0).

Dwell Times

Dwell times are not used in these programs, so this data area needs to be set completely to the default settings (0).

Zones

Zones are not used in these programs, so this data area needs to be set completely to the default settings (0).

Program

W030 is used as a work word.

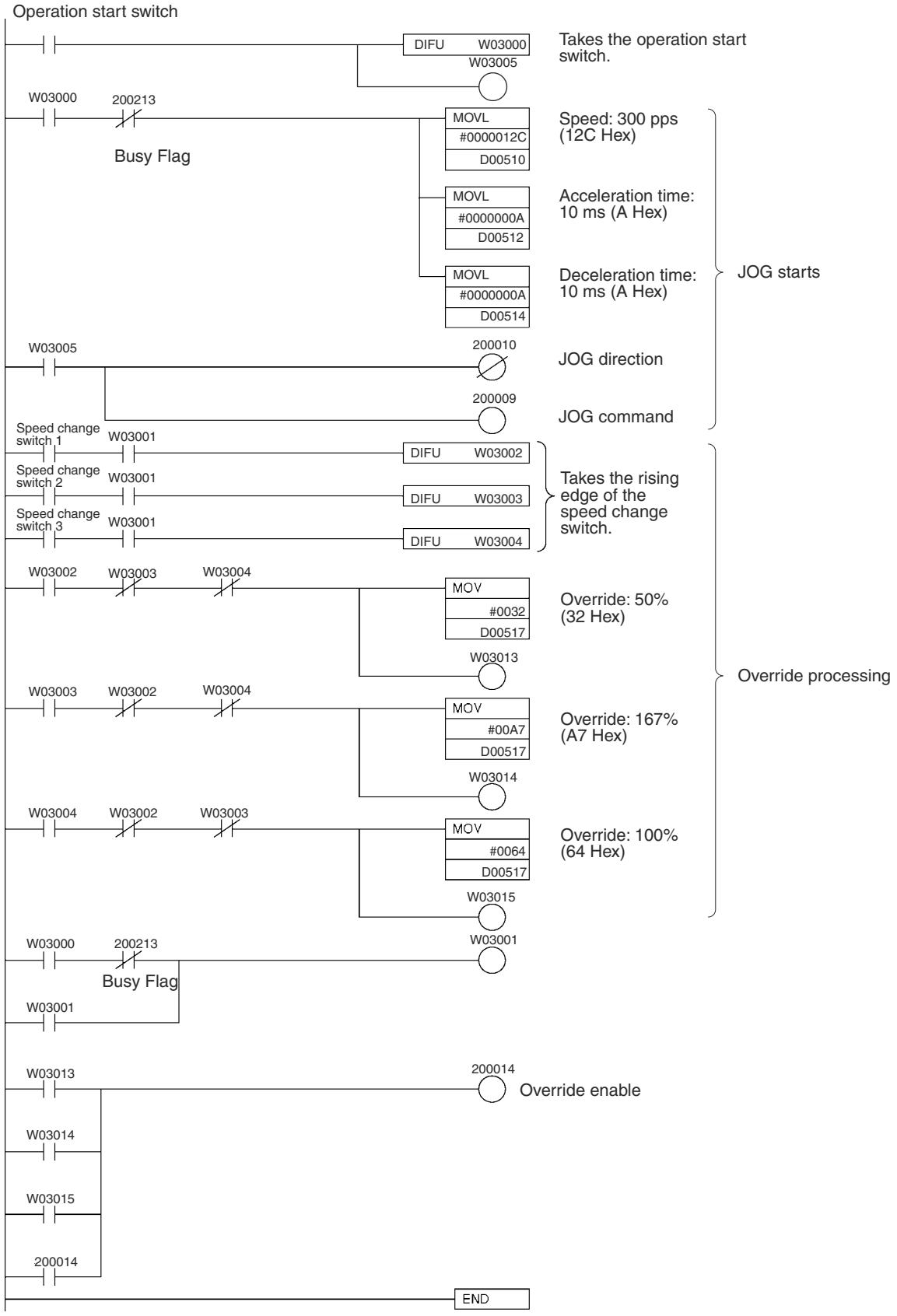

10-7 Transferring and Saving Data

10-7-1 Copying Data

Overview

- Reading and writing data is carried out according to the number of transfer words, the transfer source area, the transfer source word, and the transfer destination address set in the operating data area.
- This operation can also be used for reading data from a PCU to which data has already been transferred, and for backing the data up or copying it to another PCU.

Operation Example

X-axis operating data from an NC213 PCU which has already transferred the operating data for two axes is read into the DM Area. The operating data set for the DM Area is written to an NC113 PCU and saved. By combining these two operations, the NC213's X-axis data can be copied to the NC113.

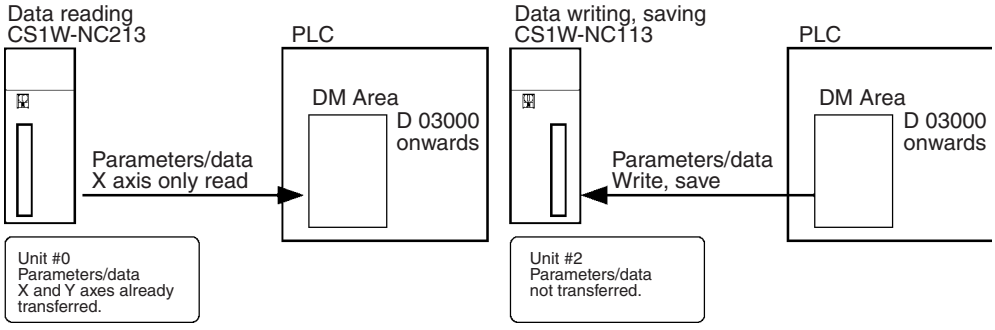

READ DATA

1,2,3...

1. Mount the NC213 (Unit #0) to the Programmable Controller's CPU Rack. Make sure that the data and parameters for both the X and Y axes needed for the operation of the NC213 (Unit #0) are all transferred.
2. When the operation start switch is turned ON, the parameters and data for the X axis of the NC213 are read into D03000 through D03799 at the PLC.
3. When work bit W03010 turns ON the read operation is completed.

WRITE DATA and SAVE DATA

1,2,3...

1. Mount the NC113 (Unit #2) to the Programmable Controller's CPU Rack. Set the parameters and data for the X axis of the NC113 in D03000 through D03799 of the PLC.
2. When the operation start switch is turned ON, the parameters and data in D03000 through D03799 are written to the NC113 and then saved.
3. When work bit W03014 turns ON, the WRITE DATA and SAVE DATA operations are completed.

Setting the PCU

READ DATA	Unit number:	Unit #0
	PCU used:	NC213
WRITE DATA and SAVE DATA	Unit number:	Unit #2
	PCU used:	NC113

Data Memory Settings

READ DATA
NC213

DM	Setting	Contents of setting
D20000	000D	Sets the operating data area to D00500 onwards.
D20001	01F4	
D20002	0000	Parameters read from PCU's internal flash memory.

The parameters for each axis are read from the flash memory of the PCU. Transfer them in advance to the PCU and then save them.

WRITE DATA and SAVE DATA
NC113

DM	Setting	Contents of setting
D20200	000D	Set the operating data area to D00600 onwards.
D20201	0258	
D20202	0000	Parameters read from PCU's internal flash memory.

Designation of the Operating Data Area

The operating data area is set during programming and therefore no setting is necessary beforehand.

Data Settings

READ DATA

- Axis Parameters
- Positioning Sequences
- Speeds
- Positions
- Acceleration and Deceleration Times
- Dwell Times
- Zones

Transfer the data needed for the operation beforehand to the PCU for both the X and Y axes, and save it in the flash memory.

WRITE DATA and SAVE DATA

The data in D03000 through D03799 is transferred to the PCU, so set all the data such as the axis parameters, positioning sequences, speeds and so on, in this DM Area.

Program

W030 and W031 are used as work words.

READ DATA

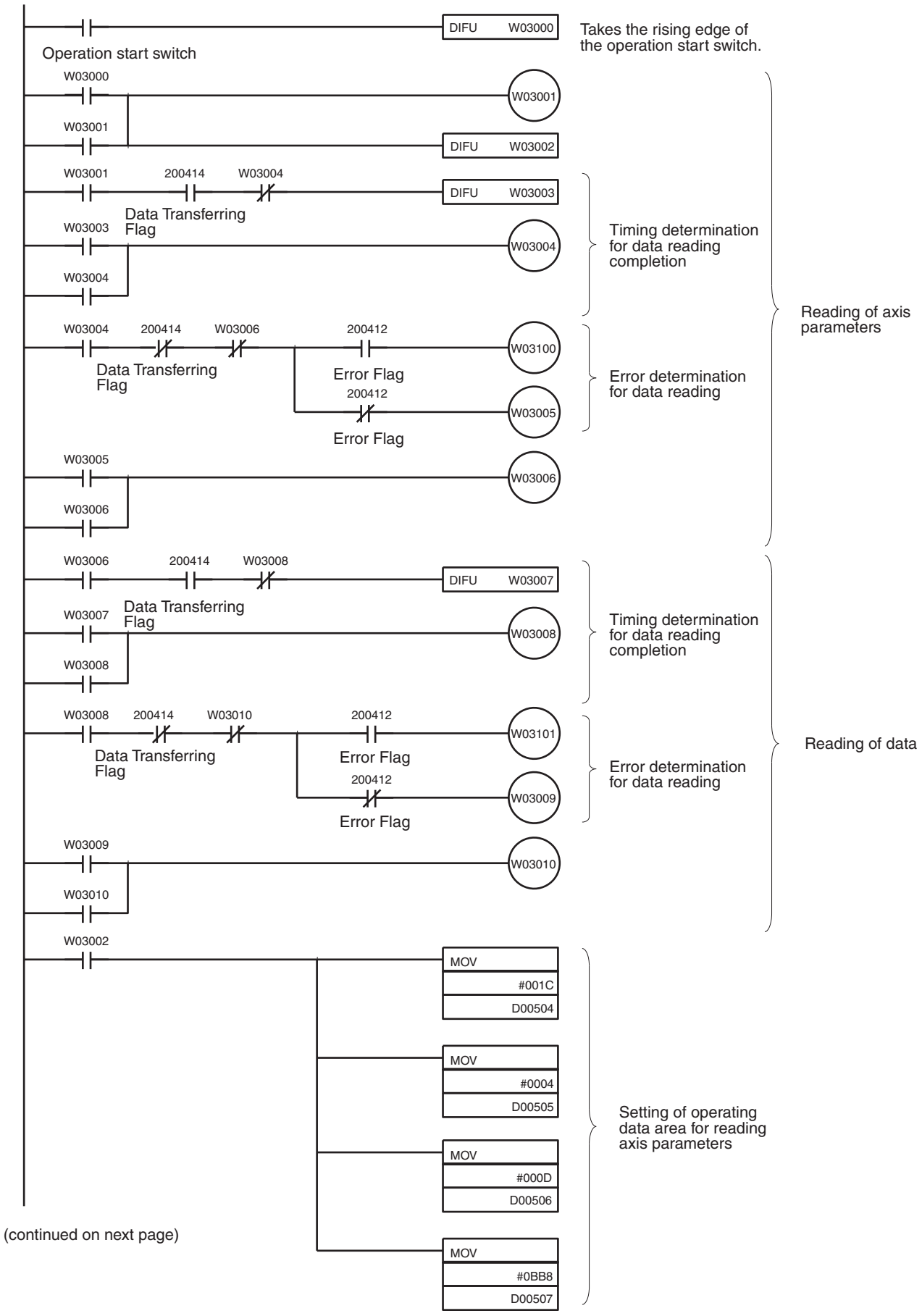

(continued on next page)

(continued from previous page)

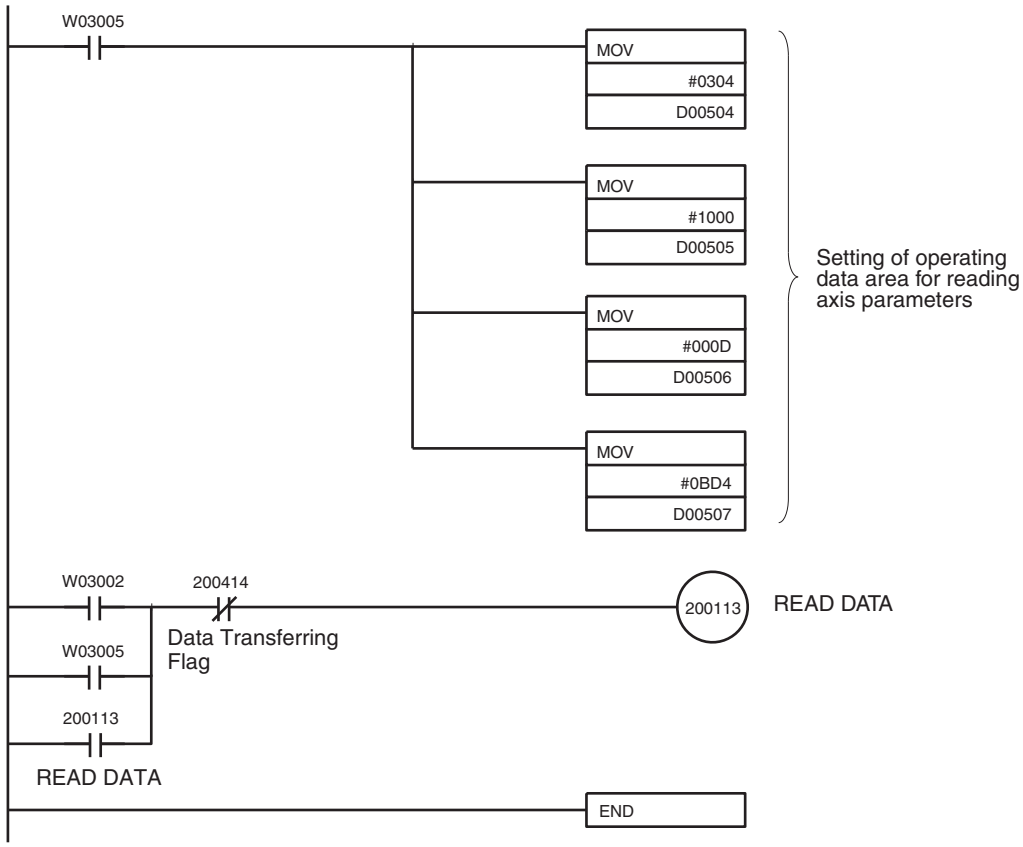

WRITE DATA and SAVE DATA

W030 and W031 are used as work words.

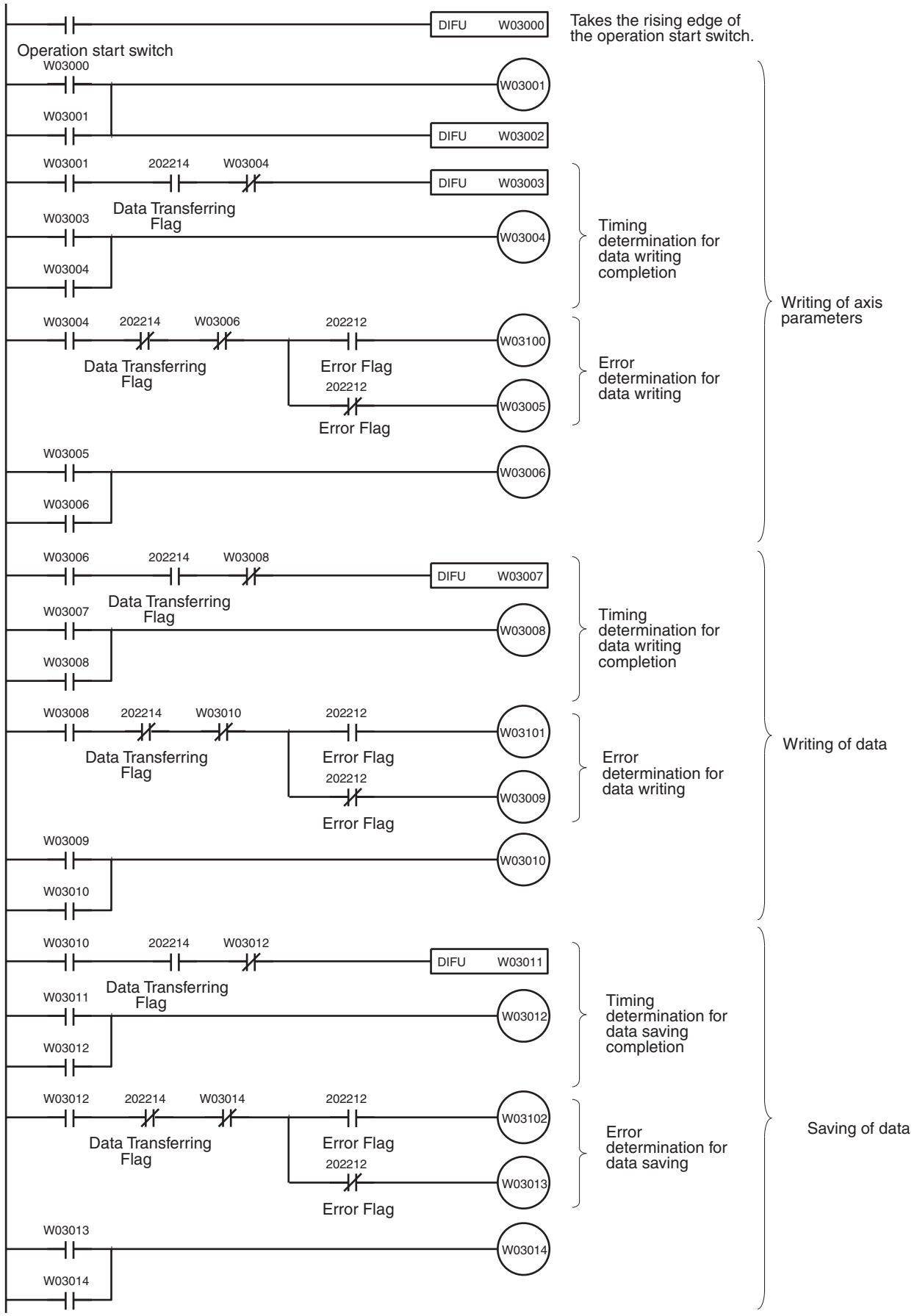

(continued on next page)

(continued from previous page)

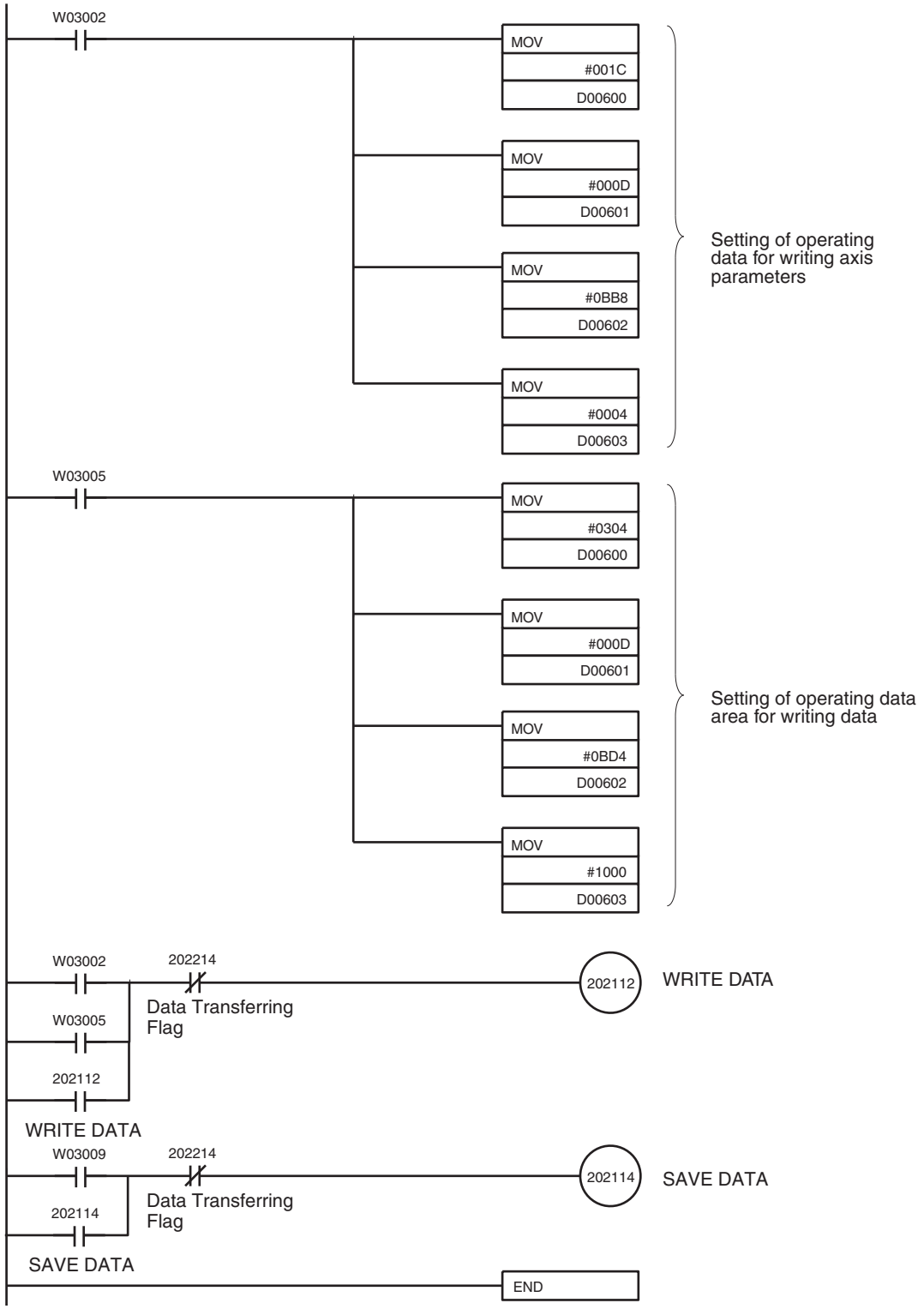

SECTION 11
Troubleshooting

This section describes how to diagnose and correct errors that can occur during operation.

11-1 Troubleshooting Tables 306
11-1-1 Items to Check First 306
11-1-2 Problems and Countermeasures 307
11-2 Introduction 313
11-3 LED Error Indicators 314
11-4 Reading Error Codes 317
11-5 Error Code Lists 318
11-5-1 Data Check at Startup 318
11-5-2 Command Execution Check 322
11-6 Releasing Pulse Output Prohibition and Resetting After Errors 335
11-6-1 Outline 335
11-6-2 Beginning Words of Operating Memory Area, Operating Data Area, and Parameter Areas 336
11-6-3 Operating Memory Area Allocation 337
11-6-4 Timing Chart 337
11-7 Error Display at the CPU 338
11-8 Reading Error Information with CX-Position 338

11-1 Troubleshooting Tables

This section provides tables to refer to when a particular problem arises. The tables provide a general description of the nature of various potential problems, the probable cause, items to check, and suggested countermeasures.

For more detailed explanations, refer to sections *11-2* onwards.

11-1-1 Items to Check First

If a problem has developed, check the following items first.

No.	Category	Items to check	Checked
1	Installation environment	Is the environment dusty?	
2		Are there conducting materials (such as metals, carbon, etc.) in the environment that could get into the equipment?	
3		Is the ambient temperature higher than the level shown in the specifications?	
4		Is there excessive moisture (from humidity, water usage, etc.)?	
5		Are there corrosive materials in the environment (acid, salt, sulphur, etc.)?	
6		Is there a source of noise nearby (such as a welding machine or inverter)?	
7	Wiring	Are signal lines and power lines placed in separate ducts?	
8		Is there proper grounding?	
9		Does the power supply have a noise filter?	
10	Recent changes	Has there been recent construction (involving welding, and so on)?	
11		Has a power supply been added recently?	
12		Have there been changes or additions to the system (including programs)?	
13	Errors	Was there any lightning nearby?	
14		Was there any interruption caused by a fuse or breaker?	
15		Is the power OFF?	

11-1-2 Problems and Countermeasures

- If any errors occur that are not covered in the following tables, print out the contents of the PLC Interface Area and related DM Area words from the CX-Programmer or other Programming Device and provide them to your OMRON representative.
- If unexpected operation has occurred, it is possible that parameters or operating data was not saved when they were transferred or not saved in flash memory. If the CX-Position is being used, upload the parameters and operating data from the PCU and open the file and check to be sure that the data was transferred and saved properly. If the CX-Position is not being used, check the parameters and operating data in the DM Area.
- If unexpected operation has occurred, it is possible that data or flags have not been exchanged properly between the ladder program and the PCU. Use the CX-Programmer data trace function to check whether the data is being exchanged at the correct timing.

No.	Problem	Probable causes	Items to check	Remedy
1	The CPU Unit's RUN indicator does not light when the power is turned ON.	Power supply lines are wired incorrectly.	Check the power supply wiring.	Correct the power supply wiring.
2		The power supply voltage is low.	Check the power supply voltage.	Check the power supply capacity and correct the power supply.
3		An internal fuse has blown.	Check the fuses.	Replace the fuse and determine what caused it to blow. (Refer to the troubleshooting section in the applicable CPU Unit operation manual.)
4		The power supply is defective.	Check the power supply.	Replace the power supply.
5	Only the PCU's RUN indicator fails to light when the power is turned ON.	The power supply capacity is insufficient.	Add up the power supply capacity for all of the Units mounted to the same Rack, including the CPU Unit, and compare that to the power supply capacity of the Power Supply Unit. If the combined capacity of the Units is greater than that of the Power Supply Unit, then they cannot be properly used.	Increase the power supply capacity Change the configuration so that the power supply capacity at the Backplane is not exceeded.
6		The PCU is defective.	---	Follow the steps given in sections *11-3* onwards.
7	The motor does not lock.	Operating command has not been output from the Output Unit to the Servo Drive.	Check the wiring between the Output Unit and the Servo Drive with a tester. Check that an operating command has been included in the ladder program.	Correct the wiring. Correct the ladder program.
8		Servo Drive setting error.	Check the settings for the Servo Drive.	Correct the settings for the Servo Drive.

No.	Problem	Probable causes	Items to check	Remedy
9	The motor is not turning.	The servo is not locked.	Refer to 7 and 8.	Refer to 7 and 8.
10		The wiring is incorrect between the PCU and the Servo Drive.	Check the wiring with a tester. Change the connecting cables.	Correct the wiring.
11		A run prohibit input, such as POT or NOT, is OFF (when Cn-01 bits 2 and 3 are 0).	Check the run prohibit inputs.	Turn ON the Servo Drive run prohibit input. Make the setting so that the Servo Drive run prohibit inputs will not be used.
12		The Servo Drive is in the internally set speed control mode (and is not receiving PCU speed referenced).	Check the Servo Drive setting.	Correct the Servo Drive setting.
13		A Servo Drive alarm has been generated.	Check the contents of the Servo Drive alarm.	If there is an alarm, then follow the instructions.
14		The mechanical axis is locked.	Check whether there is a mechanical limit or lock in effect.	Manually release the mechanical lock.
15		The PCU is defective.	---	Replace the PCU.
16	Origin search cannot be executed.	An error or warning has been generated.	Check the contents of the error or warning.	If there is an error or warning, then follow the instructions.
17		The PCU's origin proximity input is wired incorrectly.	Use the Teaching Box's input signal monitor function to check whether the sensors are turning ON and OFF normally.	Correct the wiring.
18		The origin input signal is incorrectly wired to the PCU.	Check the wiring for the origin input signal.	Correct the wiring.
19		The direction of rotation does not match the direction of the limit input.	If axis rotation is reaching the mechanical limit without reversing direction, check whether the limit inputs in the operating memory area are turning ON and OFF normally.	Correct the limit input wiring.
20		The limit input is wired incorrectly.	Check the limit input wiring.	Correct the limit input wiring.
21		The positioning completed signal does not turn ON.	Check that the Servo Drive's gain is not set too low. Check that the in-position width of the Servo Drive is not too small.	Increase the Servo Drive's gain. Increase the Servo Drive's in-position width.
22		The origin search proximity speed is too fast.	Check the origin search proximity speed.	Decrease the origin search proximity speed.
23		The parameters are set incorrectly.	Check the CX-Position or DM Area parameters. If the single-direction mode is specified for a system in which limits are set for both sides, for example, an error will occur and operation will stop when a limit is detected.	Set the parameters correctly, transfer them to the PCU, and write them to flash memory.
24		The PCU is defective.	---	Replace the PCU.

No.	Problem	Probable causes	Items to check	Remedy
25	The origin established by the origin search sometimes changes.	There is some looseness in couplings or other mechanical connections.	Check whether there is any deviation from the markings at the couplings between the motor and axes, or at any other connections.	Tighten up the loose connections.
26		There is no Z-phase margin. There is no margin for the origin input signal.	Check the Z-phase margin using the procedure given in *6-8 Z-phase Margin*. If the value is near one rotation (the number of pulses in one rotation), or near zero, a deviation of one motor revolution may occur at the time of the origin search due to minute changes in the timing of sensor inputs.	Remove the motor coupling and adjust it by about a 1/4 turn, so that the Z-phase margin pulses will be equivalent to about half of a Servomotor rotation, and then try executing the origin search again.
27	Motor rotation is unstable.	The Servo Motor power lines and encoder lines are wired incorrectly.	Check the Servo Motor power lines and encoder lines.	Correct the wiring.
28		There is eccentricity in the couplings connecting the motor axis and the mechanical system. There may be loose screws or load torque fluctuation due to the meshing of pulley gears.	Check the machinery. Try turning the motor with no load (i.e., with the machinery removed from the coupling).	Adjust the machinery.
29		The gain adjustment is insufficient.	---	Execute Servomotor autotuning. Manually adjust the Servomotor gain.
30		The wrong Servomotor is selected (so it cannot be adjusted).	Check the torque and inertia ratings and select another Servomotor.	Change to a suitable Servomotor.
31		The Servomotor bearings are damaged.	Turn OFF the Servo Drive power. If the Servomotor has a brake, turn ON the brake power supply and release the brake, and then manually turn the motor's output axis with the motor's power line disconnected (because the dynamic brake may be applied).	Replace the Servomotor.
32		The Servomotor windings are disconnected.	With a tester, check resistance between the Servomotor's U, V, and W power lines. There should be a proper balance between the line resistances.	Replace the Servomotor.

No.	Problem	Probable causes	Items to check	Remedy
33	Rotation is reversed.	The Servo Drive is set for reverse rotation.	If JOG operation is executed and the direction is the opposite of the JOG direction, check whether the Servo Drive is set for reverse rotation. Also, check that the feedback signals (A-phase/B-phase) are not reversed and that operation is not set for reverse in the parameters.	Correct the setting for the direction of Servo Drive rotation.
34		The CW and CCW pulse output signals are reversed.	Check the wiring for the CW and CCW pulse output signals.	Correct the wiring.
35		During an origin search the origin proximity sensor polarity does not match the parameter setting (in the PCU) for the origin proximity input polarity.	Check the parameter setting and the sensor polarity.	Correct the parameter setting.
36		During an origin search, the origin proximity input wiring is faulty.	Check the that the origin proximity input signal in the operating memory area is turning ON and OFF.	Correct the origin proximity input wiring.
37	The positioning completed signal is not output or is delayed. (The next operation cannot be started.)	The Servo Drive's in-position width set in the PCU parameters is too narrow, and the axis is not in the in-position range. (If it is not in the in-position range, the next operation cannot be started because the preceding operation is not completed.)	---	Increase the in-position width set in the PCU parameters.
38		The wiring for the Servo Drive's positioning completed signal is faulty.	Check the that the positioning completed signal in the operating memory area is turning ON and OFF.	Correct the wiring for the positioning completed signal.
39		The servo speed reference is incorrect.	---	Adjust the Servo Drive's gain.
40		The axis is not in the in-position range due to external pressure applied when positioning stopped.	Using the Servo Drive's monitoring functions, monitor the error counter and check whether the axis is in the in-position range.	If positioning is stopped outside of the in-position range due to external pressure, it is possible to forcibly position in the in-position range using error counter reset output. Doing this, however, will result in an non-established origin state and so it is necessary to re-establish the origin by repeating origin search or by performing present position preset.

No.	Problem	Probable causes	Items to check	Remedy
41	There are unusual noises.	The machinery is vibrating.	Check for foreign objects in the machinery's moving parts, and inspect for damage, deformation, and looseness.	Make any necessary repairs.
42		The speed loop gain is insufficient. (The gain is too high.)	---	Perform autotuning. Manually adjust (decrease) the gain.
43		The wrong Servomotor is selected (so it cannot be adjusted).	Check the torque and inertia ratings and select another Servomotor.	Change to a suitable Servomotor.
44		There is eccentricity in the couplings connecting the Servomotor axis and the mechanical system.	---	Adjust the mounting of the Servomotor and machinery.
45	Vibration is occurring at the same frequency as the application frequency.	Inductive noise is being generated.	Check whether the Servo Drive control signals are too long. Check whether the control signal lines and power lines are bundled together.	Shorten the control signals. Separate the control signal lines and the power lines. Use a low-impedance power supply for the control signal lines.
46		The control signals are not properly grounded.	Check whether the control signal shield is properly grounded at the Servo Drive. Check whether the control signal lines are in contact with the ground.	Correct the wiring.
47		Twisted-pair or shielded cable is not being used between the PCU and the Servo Drive.	Check whether twisted-pair cables are used for the pulse signals, and whether the cables are shielded.	Use twisted-pair and shielded cable as in the wiring examples.
48	The motor axis is vibrating unsteadily.	The gain adjustment is insufficient. (The gain is too low.)	---	Perform autotuning. Manually adjust (increase) the gain.
49		The gain cannot be adjusted because the mechanical rigidity is too weak.	This particularly tends to occur in systems with vertical axes, scalar robots, palletizers, and so on, which place a torsion load on the axes.	Increase the mechanical rigidity. Re-adjust the gain.
50		The mechanical structure is producing stick slip (high-viscosity statical friction).	---	Perform autotuning. Manually adjust the gain.
51		The wrong Servomotor is selected (so it cannot be adjusted).	Check the torque and inertia ratings and select another Servomotor.	Change to a suitable Servomotor.
52		The Servomotor or the Servo Drive is defective.	---	Replace the Servomotor or the Servo Drive.

No.	Problem	Probable causes	Items to check	Remedy
53	There is slippage in positioning.	The slippage is not constant. Malfunction due to noise.	Is shielded cable being used?	Use shielded cable.
54		There was already slippage in the position of the origin before positioning was performed.	Refer to 25 and 26.	Refer to 25 and 26.
55		The shield is not properly grounded at the Servo Drive.	Check the ground wiring.	Correct the wiring.
56		The PCU's output power supply is not separated from other power supplies.	Check whether the PCU's output power supply is separated from other power supplies.	Separate the PCU's output power supply from other power supplies.
57				Install a noise filter at the primary side of the PCU's output power supply.
58				Ground the PCU's output power supply.
59		The cable between the PCU and the Servo Drive is too long.	---	The maximum cable length is two meters for open collector output models and five meters for line driver output models.
60		Twisted-pair cable is not being used for the pulse outputs.	Check whether twisted-pair cable is being used for the pulse outputs.	Use twisted-pair cable for pulse outputs.
61		The cable between the PCU and the Servo Drive is not separated from other power lines.	Check whether the cable is separated from other power lines.	Separate the cable from other power lines.
62		There is malfunctioning due to noise from a welding machine, inverter, etc.	Check whether there is a device such as a welding machine or inverter nearby.	Separate the Unit from the noise source.
63		Output for operating commands turns OFF during operation.	Check whether the Servo Drive's operating command output signals are turning OFF during operation.	Turn ON the operating command output signals with the correct timing.
64		There is slippage in the mechanical system.	Check for slippage by marking the mechanical connections.	Tighten the connections.
65	Speeds drops (or operation stops) during continuous operation	The minimum operating time (10 ms min.) is not achieved.	Calculate the movement time by dividing the amount of movement by the speed to check whether operation is longer than the minimum operating time.	Add the minimum operating time and other factors, and adjust the target distance and speed so that the movement time will be greater than this total.
66	When memory operation is temporarily stopped and then restarted, it starts from the beginning again (not from where operation was temporarily stopped)	When operation is restarted, the Sequence Number Enable Bit is ON at the point when the START Bit is turned ON.	Check the ladder program and data trace.	Change the ladder program so that the Sequence Number Enable Bit is turned OFF when the START Bit is turned on to resume operation.

11-2 Introduction

The errors detected by the Position Control Unit (PCU) can be divided broadly into the following categories.

Startup Errors

The following checks are performed when the PCU is turned ON or restarted.

- Hardware check
- CPU Unit communications check
- Common parameters check
- Flash memory check
- Axis parameters check

The error status is retained when an error occurs. Refer to the tables for the error-clearing procedure and clear the error.

When two or more errors have occurred, the next error will be detected when the first error is cleared. Repeat the error-clearing procedure until all of the errors have been cleared. When an error hasn't been cleared, all commands will be invalid except for the all-axis data transfer (write and read) and data save operations.

Instruction Execution Errors

An error check is performed when a command is executed or a data irregularity is detected during operation. An error check is also performed when a software limit, emergency stop, or limit signal is detected.

Refer to the tables in *11-5 Error Code Lists* for details on the Unit operation when an error has occurred. If an emergency stop or limit signal error is detected when an error has occurred, an emergency stop or limit signal error will be output. Refer to the tables for the error-clearing procedure and clear the error.

Note A command such as START can be performed after removing the cause of the command execution error. Errors occurring during data transfers from CX-Position or using the IOWR instruction can be cleared (to 0) only when there were no errors in the write data and write was completed normally. When error code 8700 is output, errors can be cleared (to 0) if IORD was completed normally.

Troubleshooting Flowcharts

Error type	Flowchart	Reference
Error at power up or restart	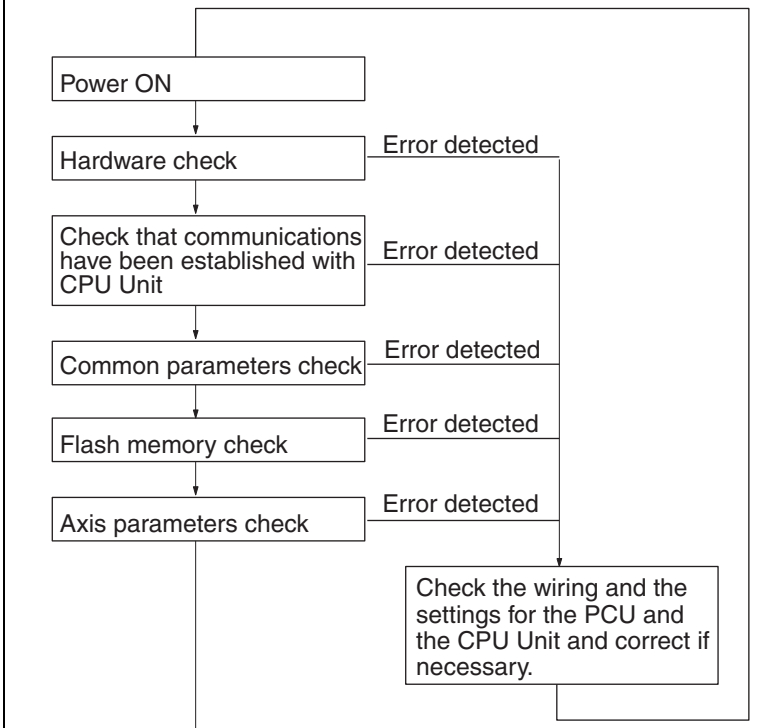	*11-3 LED Error Indicators* *11-5 Error Code Lists*
Instruction execution error	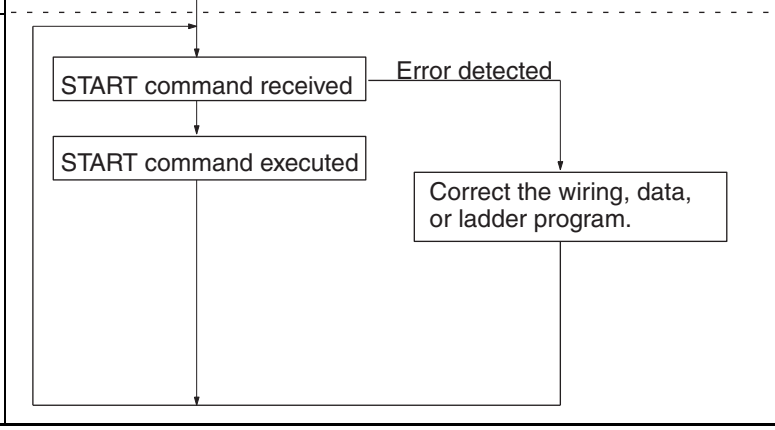	

11-3 LED Error Indicators

The status of the LED indicators on the front of the PCU can be used to diagnose errors as shown in the following table.

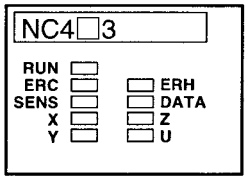

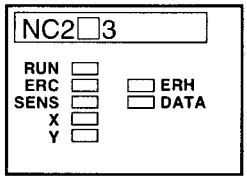

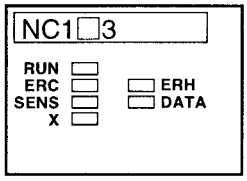

The status of the LED indicators on the front of the PCU can be used to diagnose errors as shown in the following table. The status of the indicators is as follows:

❍:ON
☆:Flashing
●:OFF
---: • When a data error or an external sensor input error occur, the indicator for the corresponding axis will flash.
• In normal operation, the indicator will be lit during pulse output, and be unlit while pulse output is stopped.

LED									Error	Cause	Remedy
RUN	ERC	ERH	SENS	DATA	X	Y	Z	U			
●	●	●	●	●	●	●	●	●	PLC power supply OFF	The PLC's power supply is OFF.	Turn ON the PLC's power supply.
									Not mounted to Backplane	The PCU is not mounted securely to the PLC Backplane.	Mount the PCU to the Backplane securely.
									Watchdog timer error	The watchdog timer for the PCU turned ON.	Mount the PCU to the Backplane securely and reset the power supply.
									CPU Unit power interruption	An interruption in the power supply was detected at the CPU Unit.	Remove the cause of the power interruption and reset the power supply.
●	●	❍	●	●	●	●	●	●	Setting error	The unit number set for the PCU is outside the acceptable range.	Set the unit number for each of the Units to a setting within the acceptable range, reset the power supply, and create an I/O table from the CPU Unit.
										The unit number set for the PCU is the same as the unit number set for another Unit (unit number duplication).	Change the unit number setting, reset the power supply, and create an I/O table from the CPU Unit.
										I/O table has not been created.	Create an I/O table from the CPU Unit.
										Communications with the CPU Unit are not possible.	Mount the Unit to the Backplane securely.
●	❍	●	●	●	●	●	●	●	PCU error	Unexpected operation occurred at the PCU.	Replace the PCU.
●	❍	❍	●	●	●	●	●	●	Unit type error	There is a fault in a component of an I/O card or bus ASIC in the PCU.	Replace the PCU.
●	❍	●	❍	❍	●	●	●	●	System software error	The system software for the Unit has been destroyed.	Replace the PCU.
●	❍	●	❍	❍	❍	●	●	●	RAM error	There is a fault in the PCU's RAM.	Replace the PCU.

LED									Error	Cause	Remedy
RUN	ERC	ERH	SENS	DATA	X	Y	Z	U			
❍	●	❍	●	●	●	●	●	●	CPU error	The CPU Unit has stopped because the watchdog timer turned ON.	Check that the Backplane, CPU Unit, and PCU are all mounted securely, and reset the power supply. If the same error occurs repeatedly, replace the Backplane, CPU Unit, or PCU.
										A CPU bus error has been detected.	
										The CPU Unit did not perform END refresh processing within the cyclic service monitor time.	In the system settings for the CPU Unit, check that the END refresh has not been disabled. If it has been disabled, enable it, and reset the power supply. Increase the CPU Unit's cycle monitor time, and reset the power supply again. Even if this error is detected, it will not affect PCU operation. Also, once END refresh is enabled, the ERH LED indicator will turn OFF.
										A fatal error occurred in the CPU Unit.	Remove the cause of the error at the CPU Unit. Once the cause is removed, normal status will be restored, and the ERH LED indicator will turn OFF.
❍	❍	●	☆	☆	☆	●	●	●	Parameters destruction	When using the axis parameters saved in the PCU, the parameters saved in flash memory have been lost. It is possible that, while saving to flash memory, the PCU's power supply was interrupted, there was noise, or there was an error in flash memory.	In this condition, only the data transfer (read and write) and data save operations can be performed. The PCU's axis parameters and data are all returned to their default values. After transferring the parameters again for all axes, save the parameters and either reset the power supply or restart the PCU. If the error persists, replace the PCU.
❍	❍	●	☆	☆	●	●	●	●	Data destruction	The following data saved in flash memory has been lost: Zones, positioning sequences, speeds, acceleration/deceleration times, positions, dwell times. It is possible that, while saving to flash memory, the PCU's power supply was interrupted, there was noise, or there was an error in flash memory.	

LED									Error	Cause	Remedy
RUN	ERC	ERH	SENS	DATA	X	Y	Z	U			
❍	❍	●	☆	●	●	●	●	●	Operating data area designation error	The designation for operating data area (m) is incorrect. • Area designation: Set to a setting other than 00, 0D, or 0E. • Bank designation: Set to a setting not in the range 00 to 0C, when 0E is set for the area designation.	In this condition, only the data save operations can be performed. The PCU's axis parameters and data are all returned to their default values. After correcting the common parameters (refer to *SECTION 4*), either reset the power supply or restart the PCU.
									Response timeout	The axis parameters set in the PLC could not be read to the PCU.	Increase the cycle monitor time set with CX-Programmer and either reset the power supply or restart the PCU. If this error occurs again despite increasing the cycle monitor time, it is possible that there is a fault in the PCU or somewhere in the PLC. Contact your OMRON representative.
❍	❍	●	●	●	●	●	●	●	Operating data area address specification error	The beginning word designation for the operating data area (m+1) is outside the settable range.	In this condition, only the data save operations can be performed. The PCU's axis parameters and data are all returned to their default values. After correcting the common parameters (refer to *SECTION 4*), either reset the power supply or restart the PCU.
❍	●	●	●	●	–	–	–	–	Normal operation	---	---
❍	❍	●	●	●	–	–	–	–	Error occurred	An error other than a data error occurred during external sensor input.	Check the error code and correct the error.
❍	❍	●	❍	●	–	–	–	–	External sensor input	An emergency stop input or CCW/CW limit input signal was received.	Check the error code, verify that it is safe to proceed, and correct the error.
❍	❍	●	●	❍	–	–	–	–	Data error	A data inconsistency such as an out-of-range parameter occurred.	Check the error code and correct the error.
❍	❍	●	❍	❍	–	–	–	–	External sensor input data error	An external sensor input and data error occurred simultaneously.	The last error that was detected will be output for the error code.

11-4 Reading Error Codes

When an error has occurred, an error flag will be turned ON in the operating memory area and the error code will be input in the operating data area. Check this code before proceeding with error processing.

The following tables show the allocation of bits for error flags and words for error codes.

Operating Memory Area

Name	Model	Operating memory area				Bit	Contents
		X axis	Y axis	Z axis	U axis		
Error Flag	NC4□3 NC2□3 NC1□3	n+8 n+4 n+2	n+11 n+7	n+14	n+17	12	1: Error occurred 0: No error
Error Code	NC4□3 NC2□3 NC1□3	n+10 n+6 n+4	n+13 n+9	n+16	n+19	00 to 15	Error code (A code of 0000 indicates normal operation.)

11-5 Error Code Lists

11-5-1 Data Check at Startup

The following table shows the errors checked when power is turned ON.

Group	Name	Code	Cause	Remedy
Data destruction	Parameters corrupted	0001	• Power turned ON normally When using the axis parameters saved in the PCU, the parameters saved in flash memory are lost. It is possible that, while saving to flash memory, the PCU's power supply was interrupted, there was noise, or there was an error in flash memory. • Restoring operation The data in the Memory Card was corrupted, or data from a different model or version was restored.	In this condition, only the data transfer (read and write) and data save operations can be performed. In this case, the PCU's axis parameters and data are all returned to their default values if the unit version of the PCU is earlier than version 2.3. If the unit version of the PCU is version 2.3 or later, only parameters and data for which an error has been detected will be returned to their default values. After transferring the parameters again for all axes, save the parameters and either reset the power supply or restart the Unit. If the error persists, it is possible that there is a fault in flash memory, and so it may be necessary to replace the PCU.
	Data corrupted	0002	The following data saved in flash memory will be lost: Zones, positioning sequences, speeds, acceleration/deceleration data, positions, and dwell times. It is possible that, while saving to flash memory, the PCU's power supply was interrupted, there was noise, or there was an error in flash memory.	
	F-ROM check data destruction	0003	The flash memory error data saved in flash memory is lost (OMRON maintenance data is lost). It is possible that, while saving to flash memory, the PCU's power supply was interrupted, there was noise, or there was an error in flash memory.	When this error occurs, operation can be continued by performing error reset. Execute the next operation after performing error reset.

Group	Name	Code	Cause	Remedy
Common parameters	Operating data area designation error	0010	The operating data area designation (m) is incorrect. • Area designation: Set to a setting other than 00, 0D, or 0E. • Bank designation: Set to a setting not in the range 00 to 0C, when 0E is set for the area designation.	In this condition, only the data save operations can be performed. In this case, the PCU's axis parameters and data are all returned to their default values if the unit version of the PCU is earlier than version 2.3. If the unit version of the PCU is version 2.3 or later, only parameters and data for which an error has been detected will be returned to their default values. After correcting the common parameters (refer to *SECTION 4*), reset the power supply or restart the PCU.
Common parameters	Operating data area address designation error	0011	The designation of the beginning word of the operating data area's address (m+1) is outside the settable range.	In this condition, only the data save operations can be performed. In this case, the PCU's axis parameters and data are all returned to their default values if the unit version of the PCU is earlier than version 2.3. If the unit version of the PCU is version 2.3 or later, only parameters and data for which an error has been detected will be returned to their default values. After correcting the common parameters (refer to *SECTION 4*), reset the power supply or restart the PCU.
	Parameter designation error	0013	The axis parameter designation (m+2) is not set to 00 or 01. Alternatively, the combination of settings for the number of unused axes is incorrect.	
	Axis designation error	0014	The axis parameter designation (m+2) is set to 01, and 1 is set for an axis not controlled by the PCU.	
Axis parameters	Response timeout	0020	The axis parameters set in the CPU Unit could not be read to the PCU.	Increase the cycle monitor time set with CX-Programmer and either reset the power supply or restart the PCU. If this error occurs again, despite increasing the cycle monitor time, it is possible that there is a fault in the PCU or somewhere in the PLC. Either replace the whole PLC, or the PCU.

Group	Name	Code	Cause	Remedy
Initial speed	Initial speed error	1000	The axis parameters' initial speed setting exceeds the maximum speed setting for an axis.	In this condition, only the data transfer (read or write) and data save operations can be performed. In this case, the PCU's axis parameters and data are all returned to their default values if the unit version of the PCU is earlier than version 2.3. If the unit version of the PCU is version 2.3 or later, only parameters and data for which an error has been detected will be returned to their default values. After correcting the appropriate axis parameters, reset the power supply or restart the PCU.
	Initial pulse designation error	1001	The initial pulse designation is not set to 0000 or 0001.	
Maximum speed	Maximum speed error	1010	The axis parameters' maximum speed setting is outside the settable range (1 to 500 kpps).	
Acceleration/ deceleration data	Acceleration time error	1310	The axis parameters' origin search acceleration time setting is outside the settable range (0 to 250 s).	
	Deceleration time error	1320	The axis parameters' origin search deceleration time setting is outside the settable range (0 to 250 s).	
	Acceleration/ Deceleration curve error	1330	The axis parameters' acceleration/ deceleration curve setting is not 0 or 1.	
	Positioning monitor time error	1332	The axis parameters' positioning monitor time setting is outside the settable range (0 to 9999 ms).	
Origin search	Origin compensation error	1600	The axis parameters' origin compensation setting is outside the settable range (–1,073,741,823 to 1,073,741,823 pulses).	
	Origin search high speed error	1601	The axis parameters' origin search high speed setting exceeds the axis parameters' maximum speed setting.	
	Origin search proximity speed error	1602	The axis parameters' origin search proximity speed setting exceeds the axis parameters' maximum speed setting.	
	Origin search speed inconsistent	1603	The axis parameters' origin search high speed setting is less than or equal to the origin search proximity speed setting.	
	Operation mode selection error	1604	The axis parameters' origin search operating mode selection setting is not 0, 1, 2, or 3.	
	Origin search operation error	1605	The axis parameters' origin search operation setting is not 0, 1, or 2.	

Group	Name	Code	Cause	Remedy
Origin search	Origin search direction error	1606	The axis parameters' origin search direction designation is not 0 or 1.	In this condition, only the data transfer (read or write) and data save operations can be performed. All of the axis parameters will be returned to their default values. After correcting the appropriate axis parameters, reset the power supply or restart the PCU.
	Origin detection method error	1607	Even though the axis parameters' origin search operation is not set to single-direction mode, the origin detection method setting is not 0, 1, or 2.	
Backlash compensation	Backlash compensation error	1700	The axis parameters' backlash compensation setting is outside the settable range (0 to 9,999 pulses).	
	Backlash compensation speed error	1710	The axis parameters' backlash compensation speed setting exceeds the maximum speed setting.	
Software limits	CW software limit error	1800	The axis parameters' CW software limit setting is outside the settable range (–1,073,741,823 to 1,073,741,823).	
	CCW software limit error	1801	The axis parameters' CCW software limit setting is outside the settable range (–1,073,741,823 to 1,073,741,823).	
Sensor inputs	Emergency stop input	6000	An emergency stop signal has been input.	After clearing the emergency stop input, execute RELEASE PROHIBIT/ERROR RESET. For a limit input, execute RELEASE PROHIBIT/ERROR RESET and feed in the opposite direction from the limit stop. Check the axis parameters' signal type setting (N.C. or N.O.).
	CW limit stop	6100	A CW limit input signal has been input.	
	CCW limit stop	6101	A CCW limit input signal has been received.	

11-5-2 Command Execution Check

Data Checks for Data-writing Commands

Item	Name	Code	Cause	Clearing method	Operation after error
Initial speed	Initial speed error	1000	The axis parameters' initial speed setting exceeds the maximum speed designation.	Transfer the data again after checking and correcting it.	When this error occurs during data transfer, all data (including the data with the error) specified for transfer will be lost. All operating axes will be decelerated to a stop.
	Initial pulse designation error	1001	The initial pulse designation is not set to 0000 or 0001.		
Maximum speed	Maximum speed error	1010	The axis parameters' maximum speed setting is outside the settable range (1 to 500 kpps).		
Acceleration/ Deceleration data	Acceleration time error	1310	The axis parameters' origin search acceleration time setting is outside the settable range (0 to 250 s).		
	Acceleration time error	1311 to 1319	An acceleration time setting (1 to 9) is outside the settable range (0 to 250 s). (The rightmost digit of the error code indicates the setting with the error.)		
	Deceleration time error	1320	The axis parameters' origin search deceleration time setting is outside the settable range (0 to 250 s).		
	Deceleration time error	1321 to 1329	A deceleration time setting (1 to 9) is outside the settable range (0 to 250 s). (The rightmost digit of the error code indicates the setting with the error.)		
	Acceleration/ Deceleration curve error	1330	The axis parameters' acceleration/deceleration curve setting is not 0 or 1.		
	Positioning monitor time error	1332	The axis parameters' positioning monitor time is outside the settable range (0 to 9,999 ms).		
Speed data	Speed error	1500 to 1599	A speed setting is outside the settable range (1 pps to 1,000 kpps). (The last two digits of the code indicate the speed data number where the error occurred.)		
Origin search	Origin compensation error	1600	The axis parameters' origin compensation setting is outside the settable range (–1,073,741,823 to 1,073,741,823).		
	Origin search high speed error	1601	The axis parameters' origin search high speed setting exceeds the axis parameters' maximum speed setting.		
	Origin search proximity speed error	1602	The axis parameters' proximity speed setting exceeds the axis parameters' maximum speed setting.		
	Origin search speed inconsistent	1603	The axis parameters' origin search high speed setting is less than or equal to the origin search proximity speed setting.		
	Operation mode selection error	1604	The axis parameters' origin search operating mode selection setting is not 0, 1, 2, or 3.		
	Origin search operation error	1605	The axis parameters' origin search operation setting is not 0, 1, or 2.		
	Origin search direction error	1606	The axis parameters' origin search direction designation is not 0 or 1.		

Item	Name	Code	Cause	Clearing method	Operation after error
Origin search	Origin detection method error	1607	Even though the axis parameters' origin search operation is set for other than single-direction mode, the origin detection method setting is not 0, 1, or 2.	Transfer the data again after checking and correcting it.	When this error occurs during data transfer, all data (including the data with the error) specified for transfer will be lost. All operating axes will be decelerated to a stop.
Backlash compensation	Backlash compensation error	1700	The axis parameters' backlash compensation setting is outside the settable range (0 to 9,999pulses).		
	Backlash compensation speed error	1710	The axis parameters' backlash compensation speed setting exceeds the maximum speed setting.		
Software limits	CW software limit error	1800	The axis parameters' CW software limit setting is outside the settable range (–1,073,741,823 to 1,073,741,823).		
	CCW software limit error	1801	The axis parameters' CCW software limit setting is outside the settable range (–1,073,741,823 to 1,073,741,823).		
Zones	Zone 0 CW error	1900	Zone 0's CW data is outside the settable range (–1,073,741,823 to 1,073,741,823).		
	Zone 0 CCW error	1901	Zone 0's CCW data is outside the settable range (–1,073,741,823 to 1,073,741,823).		
	Zone 1 CW error	1910	Zone 1's CW data is outside the settable range (–1,073,741,823 to 1,073,741,823).		
	Zone 1 CCW error	1911	Zone 1's CCW data is outside the settable range (–1,073,741,823 to 1,073,741,823).		
	Zone 2 CW error	1920	Zone 2's CW data is outside the settable range (–1,073,741,823 to 1,073,741,823).		
	Zone 2 CCW error	1921	Zone 2's CCW data is outside the settable range (–1,073,741,823 to 1,073,741,823).		
Position data	Target position error	2000 to 2099	The position data is outside the settable range (–1,073,741,823 to 1,073,741,823). (The last two digits of the code indicate the position data number where the error occurred.)		

Item	Name	Code	Cause	Clearing method	Operation after error
Positioning sequences	Sequence data error	3000 to 3099	One of the following errors occurred in the positioning sequence: The completion code is not in the range 0 to 6. The initial speed number is not in the range 00 to 99. The acceleration time number is not in the range 0 to 9. The deceleration time number is not in the range 0 to 9. The target speed number is not in the range 00 to 99. The dwell time number is not in the range 00 to 19. One of the following errors occurred in the axis designation: The Y, Z, or U axis was specified for a 1-axis PCU. The Z or U axis was specified for a 2-axis PCU. More than one axis is specified for interrupt feeding or speed control, or all axis designation settings are set to 0. (The last two digits of the code indicate the position data number (00 to 99) where the error occurred.)	Transfer the data again after checking and correcting it.	When this error occurs during data transfer, all data (including the data with the error) specified for transfer will be lost. All operating axes will be decelerated to a stop.
Dwell times	Dwell time error	4001 to 4019	These codes indicate that a dwell time is outside the settable range (0 to 9.99 s). (The last two digits of the code indicate the dwell time number (00 to 19) where the error occurred.)		

Initial Operation Error Checks and Checks During Operation

Group	Name	Code	Cause	Clearing method	Operation after error
Software limits	CW software limit value	5030	If positioning were performed within the software limit range in response to one of the following commands with the specified position data, the CW software limit would be exceeded, so positioning cannot be started. • ABSOLUTE MOVEMENT, RELATIVE MOVEMENT, or PRESENT POSITION PRESET • Positioning commands used in memory operation (absolute or relative designation) The axis has been stopped outside the CW limit and a command (e.g., JOG) was received to move further clockwise.	Start operation after correcting all of the position data.	The current START command will not be executed. Or, the axes for which speed control or interrupt feeding is performed and which exceeded the software limit will decelerate to a stop. Operating axes will not be affected.
			The software limit was exceeded for interrupt feeding or speed control during memory operation.	Start operation after correcting all of the position data and clearing the pulse output prohibited state.	
	CCW software limit value	5031	If positioning were performed within the software limit range in response to one of the following commands with the specified position data, the CCW software limit would be exceeded, so positioning cannot be started. • ABSOLUTE MOVEMENT, RELATIVE MOVEMENT, or PRESENT POSITION PRESET • Positioning commands used in memory operation (absolute or relative designation) The axis has been stopped outside the CCW limit and a command (e.g., JOG) was received to move further counterclockwise.	Start operation after correcting all of the position data.	
			The software limit was exceeded for interrupt feeding or speed control during memory operation.	Start operation after correcting all of the position data and clearing the pulse output prohibited state.	
Origin	Current position unknown	5040	One of the following commands was attempted with an unknown origin. Memory operation with absolute values, ABSOLUTE MOVEMENT direct operation, TEACH, or ORIGIN RETURN	Execute the command again after executing ORIGIN SEARCH or PRESENT POSITION PRESET and establishing the origin.	
Limit stop	Stopped at CW limit	5060	A CW-direction movement command was executed while the CW limit input signal was ON.	Move in the CCW direction.	
	Stopped at CCW limit	5061	A CCW-direction movement command was executed while the CCW limit input signal was ON.	Move in the CW direction.	

Group	Name	Code	Cause	Clearing method	Operation after error
Software limits (JOG)	Manual CW software limit	5070	The CW software limit was exceeded during JOG operation.	After executing RELEASE PROHIBIT/ERROR RESET, move in the CCW direction.	The axis that exceeded the software limit will be decelerated to a stop. Other operating axes will not be affected.
	Manual CCW software limit	5071	The CCW software limit was exceeded during JOG operation.	After executing RELEASE PROHIBIT/ERROR RESET, move in the CW direction.	
Sensor inputs	Emergency stop input	6000	The axis was stopped by an emergency stop signal input.	Start operation again after clearing the emergency stop input and executing RELEASE PROHIBIT/ERROR RESET.	An emergency stop will be performed on the affected axis. Other operating axes will not be affected.
	CW limit stop	6100	The axis was stopped by a CW limit input signal.	Move in the CCW direction after executing RELEASE PROHIBIT/ERROR RESET.	
	CCW limit stop	6101	The axis was stopped by a CCW limit input signal.	Move in the CW direction after executing RELEASE PROHIBIT/ERROR RESET.	

Group	Name	Code	Cause	Clearing method	Operation after error
Origin search	No origin proximity input signal	6200	The Unit is set for a proximity input signal, but no origin proximity input signal was received during the origin search.	Perform the origin search again after checking the origin proximity input signal wiring and the origin proximity input signal type (N.C. or N.O.) in the axis parameters' I/O settings. If the signal type is changed, reset the power supply or restart the PCU before resuming operation.	Other operating axes will not be affected.
	No origin input signal	6201	There was no origin input signal received during the origin search.	Perform the origin search again after checking the origin input signal wiring and the origin input signal type (N.C. or N.O.) in the axis parameters' I/O settings. If the signal type is changed, reset the power supply or restart the PCU before resuming operation.	

Group	Name	Code	Cause	Clearing method	Operation after error
Origin search	Origin input signal error	6202	There was an origin input signal received while decelerating after the origin proximity input signal was received during an origin search in mode 0.	Perform the following adjustments so that the origin signal will turn ON after deceleration is completed. • Increase the distance between the sensors used for the origin input signal and the sensor used for the origin proximity input signal. • Decrease the origin search high speed and origin search proximity speed settings.	The axis where the origin input signal was input will be decelerated to a stop. Other operating axes will not be affected.
	Limit inputs in both directions	6203	Origin search cannot be executed because there are limit signals being input in both directions.	Perform the origin search again after checking the wiring and signal type in the axis parameters' I/O settings (N.C. or N.O.) for both directions. If the signal type is changed, reset the power supply or restart the PCU before resuming operation.	The origin search will not be executed, but other operating axes will not be affected.
	Simultaneous origin proximity and limit signals	6204	The origin proximity input and limit signal in the origin search direction were input simultaneously during the origin search.	Perform the origin search again after checking the wiring and signal types in the axis parameters' I/O settings (N.C. or N.O.) for the origin proximity and limit signals. If the signal type is changed, reset the power supply or restart the PCU before resuming operation.	An emergency stop will be performed on the axis where the signals were input. Other operating axes will not be affected.

Group	Name	Code	Cause	Clearing method	Operation after error
Origin search	Limit input already being input	6205	There was already a limit signal in the origin search direction during an origin search in a single direction. The origin input signal and limit signal opposite the origin search direction were ON simultaneously or the limit input in the search direction went ON while the origin input signal was reversed during an origin search without proximity input signal.	Perform the origin search again after checking the wiring and signal type in the axis parameters' I/O settings (N.C. or N.O.) for the limit input. If the signal type is changed, reset the power supply or restart the PCU before resuming operation.	The current START command will not be executed. Pulse output for the axes for which the limit input signal was input will be stopped immediately. Other operating axes will not be affected.
	Origin proximity/origin reverse error	6206	The limit signal in the origin search direction was input while the origin proximity input signal was reversed during a proximity search with limit input reversal. The limit input signal in the origin search direction was received while the origin input signal was reversed during a proximity search with limit input reversal (not using the origin proximity input signal).	Perform the origin search again after checking the signal types in the axis parameters' I/O settings (N.C. or N.O.) and positions for the limit input signal, origin proximity input signal, and origin input signal inputs. If the signal type is changed, reset the power supply or restart the PCU before resuming operation.	An emergency stop will be performed on the axis where the signals were input. Other operating axes will not be affected.
Absolute movement command	Absolute movement position error	7000	The position designation of the ABSOLUTE MOVEMENT command is outside the settable range (–1,073,741,823 to 1,073,741,823 pulses).	Execute the command again after correcting the position or speed designation to a value in the settable range.	The current START command will not be executed, but other operating axes will not be affected.
	Absolute movement speed error	7001	The speed designation for the ABSOLUTE MOVEMENT command is not between 1 and 500,000 pps.		
	Absolute movement acceleration time error	7002	The acceleration time designation of the ABSOLUTE MOVEMENT command is outside the settable range (0 to 250 ms).		
	Absolute movement deceleration time error	7003	The deceleration time designation of the ABSOLUTE MOVEMENT command is outside the settable range (0 to 250 ms).		

Group	Name	Code	Cause	Clearing method	Operation after error
Relative movement command	Relative movement position error	7100	The position designation of the RELATIVE MOVEMENT command is outside the settable range (–1,073,741,823 to 1,073,741,823 pulses).	Execute the command again after correcting the position or speed designation to a value in the settable range.	The current START command will not be executed, but other operating axes will not be affected.
	Relative movement speed error	7101	The speed designation of the RELATIVE MOVEMENT command is not between 1 and 500,000.		
	Relative movement acceleration time error	7102	The acceleration time designation of the RELATIVE MOVEMENT command is outside the settable range (0 to 250 ms).		
	Relative movement deceleration time error	7103	The deceleration time designation of the RELATIVE MOVEMENT command is outside the settable range (0 to 250 ms).		
Interrupt feeding	Interrupt feeding position error	7200	The position designation of interrupt feeding is outside the settable range (–1,073,741,823 to 1,073,741,823 pulses).		
	Interrupt feeding speed error	7201	The speed designation of interrupt feeding is not between 1 and 500,000.		
	Interrupt feeding acceleration time error	7202	The acceleration time designation of interrupt feeding is outside the settable range (0 to 250 ms).		
	Interrupt feeding deceleration time error	7203	The deceleration time designation of interrupt feeding is outside the settable range (0 to 250 ms).		
Origin return	Origin return error	7300	The speed designation of origin return is not between 1 and 500,000.		
	Origin return acceleration time error	7301	The acceleration time designation of origin return is outside the settable range (0 to 250 s).		
	Origin return deceleration time error	7302	The deceleration time designation of origin return is outside the settable range (0 to 250 s).		
Present position	Present position error	7400	The position designated with present position preset is outside the settable range (–1,073,741,823 to 1,073,741,823).		
JOG	JOG speed error	7500	The JOG speed is not between 1 and 500,000.		
	JOG acceleration time error	7501	The JOG acceleration time is outside the settable range (0 to 250 s).		
	JOG deceleration time error	7502	The JOG deceleration time is outside the settable range (0 to 250 s).		

Group	Name	Code	Cause	Clearing method	Operation after error
Multiple axis start	Multiple axis start	8000	Two or more of the following commands were executed simultaneously for the same axis: START, INDEPENDENT START, ORIGIN SEARCH, ORIGIN RETURN, PRESENT POSITION PRESET, JOG, TEACH, RELEASE PROHIBIT/ERROR RESET, ABSOLUTE MOVEMENT, RELATIVE MOVEMENT, or INTERRUPT FEEDING	Correct the ladder program so that just one command is executed for each axis at one time and execute the command again.	The command will not be executed. If the last command made before the error was START, INDEPENDENT START, ORIGIN SEARCH, ORIGIN RETURN, JOG, ABSOLUTE MOVEMENT, RELATIVE MOVEMENT, or INTERRUPT FEEDING, the axis with the error will be decelerated to a stop. When interpolation operation is being used, all interpolated axes will be decelerated to a stop. If the error is generated during data transfer (read or write) or data saving, all axes will be decelerated to a stop. Any operating axes not specified above will not be affected.
			One of the following commands was executed for a busy axis: ORIGIN SEARCH, ORIGIN RETURN, PRESENT POSITION PRESET, JOG, TEACH, RELEASE PROHIBIT/ERROR RESET, ABSOLUTE MOVEMENT, RELATIVE MOVEMENT, or INTERRUPT FEEDING	Correct the ladder program so that a command is not executed for a busy axis and execute the command again.	
			A data save operation was executed while one of the following commands was in progress: START, INDEPENDENT START, ORIGIN SEARCH, ORIGIN RETURN, PRESENT POSITION PRESET, JOG, TEACH, RELEASE PROHIBIT/ERROR RESET, ABSOLUTE MOVEMENT, RELATIVE MOVEMENT, or INTERRUPT FEEDING	Correct the ladder program so that the data save operation is executed while none of the axes are busy. Execute the data save operation again.	
			Two or more of the following commands were executed: DATA WRITE, DATA READ, or DATA SAVE	Correct the ladder program so that more than one data transfer (read or write) or data save operation is not executed at the same time. Execute the data transfer or data save operation again.	
			A START or INDEPENDENT START command was executed for a different axis, but a busy axis was specified in the axis designation.	Correct the ladder program so that busy axes are not specified for memory operation and execute the command again.	

Group	Name	Code	Cause	Clearing method	Operation after error
Multiple axis start	Multiple axis start	8000	One of the following commands was executed while the Data Transferring Flag was ON: DATA WRITE, DATA READ, or DATA SAVE	Correct the ladder program so that data transfer (read or write) or data save operation is not executed while the Data Transferring Flag is ON. Execute the data transfer or data save operation again.	The command will not be executed. If the last command made before the error was START, INDEPENDENT START, ORIGIN SEARCH, ORIGIN RETURN, JOG, ABSOLUTE MOVEMENT, RELATIVE MOVEMENT, or INTERRUPT FEEDING, the axis with the error will be decelerated to a stop. When interpolation operation is being used, all interpolated axes will be decelerated to a stop. If the error is generated during data transfer (read or write) or data saving, all axes will be decelerated to a stop. Any operating axes not specified above will not be affected.

Group	Name	Code	Cause	Clearing method	Operation after error
Memory operation	Sequence number error	8101	There was a memory operation command and the Sequence Number Enable Bit was ON, but the specified sequence number was outside the settable range (00 to 99).	Execute the command again after checking the sequence number.	The current START command will not be executed, but other operating axes will not be affected.
			The Sequence Number Enable Bit was OFF, or the FORCED INTERRUPT Bit was ON, when memory operation was executed after the power was turned ON or the PCU was restarted, or after an origin search, origin return, or present position preset.	Execute the command again after changing the turning ON the Sequence Number Enable Bit. Change the ON timing for the FORCED INTERRUPT Bit.	
			The axis designations for the specified sequence number's sequence data were all set to 0.	Execute the command again after correcting the sequence data.	
			The FORCED INTERRUPT Bit was turned ON after a bank end completion in memory operation.	Change the ON timing for the FORCED INTERRUPT Bit.	
	Speed error	8104	When positioning with memory operation, the speed designated in the sequence data was set to 0.	Execute the command again after checking the speed data and sequence data to make sure that the target speed is not 0.	The axis will be decelerated to a stop if the error is detected during positioning. Other operating axes will not be affected.
Teaching	Teaching address error	8200	There was a TEACH command, but the teaching position number was not in the range 00 to 99.	Execute the command again after correcting the teaching position number.	The current START command will not be executed, but other operating axes will not be affected.
	Teaching range error	8201	Teaching cannot be performed because the present position is outside the range –1,073,741,823 to 1,073,741,823 pulses.	Change the present position on the axis (e.g., using JOG) and perform teaching again.	

Group	Name	Code	Cause	Clearing method	Operation after error
Data transfer	Write transfer: number of words error	8310	The number of write words was set to 0 or exceeded the number of write data words. The parameters for the origin search high speed and the origin search proximity speed were not sent together.	Execute the command again after changing the incorrect setting.	The current START command will not be executed, but other operating axes will not be affected.
	Write transfer: source word error	8311	The write source word or the write source area was outside the settable range.		
	Write transfer: destination address error	8312	The write destination address was outside the settable range.		
	Read transfer: number of words error	8320	The number of read words was set to 0 or exceeded the number of read data words.		
	Read transfer: source address error	8321	The read source address was outside the settable range.		
	Read transfer: destination word error	8322	The read destination word or the read destination area was outside the settable range.		
Error counter reset/ Origin adjustment output	Error counter reset/ Origin adjustment output error	8400	There was an attempt to output a error counter reset/origin adjustment output when the output couldn't be used.	Execute the command again after checking that the output can be used and changing the ladder program if necessary.	The axis will be decelerated to a stop. Other operating axes will not be affected.
Override	Override error	8500	The override setting was outside the settable range (1 to 999%).	Execute the command again after correcting the data.	
Positioning	Positioning timer timeout	8600	The Servo Drive's positioning completed signal did not go ON within the axis parameters' specified time.	Execute the command again after making adjustments such as adjusting the positioning monitor time or the servo system's gain, or checking the wiring for the positioning completed signal and correcting if necessary.	The designated axis will be decelerated to a stop. Other operating axes will not be affected.
	Overflow	8601	The movement distance is too long (greater than 2,147,483,646 pulses, or greater than 2,147,483,520 pulses for linear interpolation) and so operation is not possible.	Execute the command again after reducing the distance to move in one operation (by changing the position data).	The designated axis will be decelerated to a stop. Other operating axes will not be affected.

Group	Name	Code	Cause	Clearing method	Operation after error
Intelligent Read/Write	IORD format error	8700	One of the following errors occurred when the IORD instruction was executed: The PCU's address was outside the settable range.	Execute the instruction again after correcting the data.	The current data transfer will not be executed, but other operating axes will not be affected.
	IOWR format error	8701	One of the following errors occurred when the IOWR instruction was executed: The PCU's address was outside the settable range. The parameters for the origin search high speed and the origin search proximity speed were not sent together.		
Flash memory	Flash memory error	9300	An attempt was made to save data to flash memory, but the data couldn't be saved because of a problem with the flash memory.	Execute the data save operation again. The error will be cleared if the data is written normally. Replace the Unit if the error occurs again. (In some cases the data save operation can take up to 30 s.)	The current instruction will not be executed. All axes will be decelerated to a stop.

11-6 Releasing Pulse Output Prohibition and Resetting After Errors

11-6-1 Outline

Use the following procedure to clear error codes and to re-enable pulse output when the PCU is in the pulse output prohibited state.

In the pulse output prohibited state, pulse output is interrupted and further pulses are not output. The following table shows the main causes for pulse output being prohibited and gives the methods for clearing the prohibited state.

Cause	Error code	Clearing method
Emergency stop input signal is ON	6000	After turning OFF the emergency stop signal, pulse output is enabled with the rising edge of the RELEASE PROHIBIT/ ERROR RESET Bit. If the RELEASE PROHIBIT/ERROR RESET Bit is turned ON with the emergency stop signal still ON, pulse output will not be enabled.
CW limit input signal is ON	6100	Pulse output is enabled with the rising edge of the RELEASE PROHIBIT/ ERROR RESET Bit. Pulse output is only possible in the opposite direction to the limit input signal that turned ON. For example, if the CCW limit input signal turned ON, pulse output is only possible in the CCW direction.
CCW limit input signal is ON	6101	
Software limit error	5030 5031 5070 5071	Pulse output is enabled with the rising edge of the RELEASE PROHIBIT/ ERROR RESET Bit. Pulse output is only possible in the opposite direction to the software limit that was reached. For example, if the CW software limit was reached, pulse output is only possible in the CCW direction.

Note

1. It is possible to set with parameters whether the origin determination is released or not when the emergency stop input signal or a CW/CCW limit input signal turns ON.
2. If the origin determination is set to be released, the No Origin Flag will turn ON when one of the above input signals is turned ON.

11-6-2 Beginning Words of Operating Memory Area, Operating Data Area, and Parameter Areas

The beginning words of the operating memory area, operating data area, and common parameter area used for a Position Control Unit (PCU) are determined (or set) according to the following.

- Beginning word of the operating memory area, n = CIO 2000 + 10 × unit number
- Beginning word of the common parameter area, m = D20000 + 100 × unit number
- Beginning word of the operating data area, l, is specified in m and m+1.

Set the beginning words of the operating data area and designate the axis parameters used with the common parameters as shown below.

Word	Name	Bit	Reference
m	Operating data area designation	00 to 15	*SECTION 4*
m+1	Beginning word of operating data area	00 to 15	
m+2	Axis parameter designation	00 to 15	

11-6-3 Operating Memory Area Allocation

Name	Model	Operating memory area				Bit	Details
		X axis	Y axis	Z axis	U axis		
RELEASE PROHIBIT/ ERROR RESET	NC4□3 NC2□3 NC1□3	n n n	n+2 n+2	n+4	n+6	12	↑ : RELEASE PROHIBIT/ERROR RESET execution
No Origin Flag	NC4□3 NC2□3	n+8 n+4	n+11 n+7	n+14	n+17	06	1: Origin not established 0: Origin established
Busy Flag	NC1□3	n+2				13	1: Busy

11-6-4 Timing Chart

In the following timing chart, an emergency stop input signal is turned ON during an ABSOLUTE MOVEMENT command for X-axis operation with a 4-axis PCU. In this example, it is assumed that the parameter has been set so that the origin determination will be released when the input turns ON.

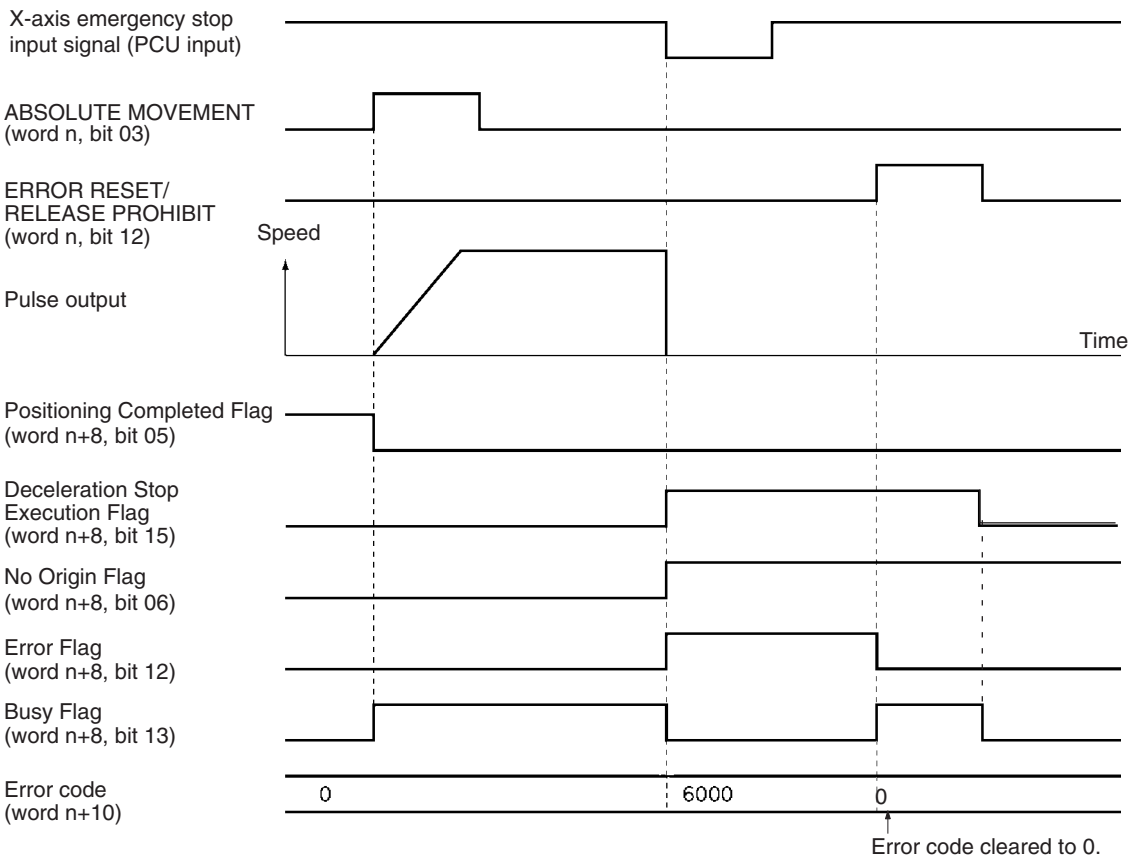

Only turn the RELEASE PROHIBIT/ERROR RESET Bit ON when the Busy Flag is OFF. If the RELEASE PROHIBIT/ERROR RESET Bit is turned ON

while the Busy Flag is ON, a multiple axis start error (error code 8000) will be generated.

11-7 Error Display at the CPU

The CPU Unit monitors the PCU, which is a Special I/O Unit, for the following items.

- Hardware irregularities
- Unit number settings outside the settable range
- Duplicated unit numbers
- I/O refresh between the CPU Unit and the PCU

If an error is detected for one of the above items, one of the following flags in the Auxiliary Area will turn ON. (For details, refer to the relevant CPU Unit operation manual.)

- Special I/O Unit Number Duplication Flag
- Special I/O Unit Setting Error Flag
- Special I/O Unit Setting Error, Unit Number Flag
- Special I/O Unit Error Flag
- Special I/O Unit Error, Unit Number Flag

For methods of clearing errors, refer to *11-3 LED Error Indicators* and *11-5 Error Code Lists*. After the error has been cleared, the PCU can be restarted without resetting the power supply by using (OFF→ON→OFF) one of the following restart bits.

Restart Bits

Bit address	Function
A50200 to A50215	Restart bits for unit numbers 0 to 15
A50300 to A50315	Restart bits for unit numbers 16 to 31
A50400 to A50415	Restart bits for unit numbers 32 to 47
A50500 to A50515	Restart bits for unit numbers 48 to 63
A50600 to A50615	Restart bits for unit numbers 64 to 79
A50700 to A50715	Restart bits for unit numbers 80 to 95

11-8 Reading Error Information with CX-Position

The following two types of error information can be displayed at the CX-Position.

- The current error
- The errors that occurred since the power was turned ON or the PCU was restarted, including the present error (20 max.)

For details, refer to the CX-Position Operation Manual (W433).

SECTION 12
Maintenance and Inspection

This section describes methods for maintaining the Position Control Unit.

12-1 Inspection 340
12-2 Routine Inspections. 340
12-3 Handling Precautions 341
12-4 Procedure for Replacing a PCU 341
12-4-1 When PCU Parameters and Operating Data is Set in the CPU Unit's DM Area 341
12-4-2 When PCU Parameters and Operating Data is Saved to the PCU's Flash Memory 342

12-1 Inspection

In order to use the functionality of the Position Control Unit (PCU) to its utmost, daily or routine inspection is recommended.

12-2 Routine Inspections

In order for your PCU to continue operating at optimum condition, periodic inspections are necessary. The main components of the PCU are semiconductors and have a long service life, but depending on the operating environment, there may be more or less deterioration of these and other parts. A standard inspection schedule is once every six months to one year. More frequent inspections may be advisable depending on the operating environment. Maintain the inspection schedule once it has been set.

Inspection Points

No.	Item	Inspection points	Criteria	Remarks
1	I/O Power Supply	Measure the voltage variations at the I/O power supply terminal block. Do they meet the standards?	24 VDC: 20.4 to 26.4 VDC 5 VDC: 4.75 to 5.25 VDC	With a voltage tester, check between the terminals and make sure that the power supply falls within the acceptable range.
2	Environment conditions	Is the ambient temperature within the acceptable range? (When used in a panel, the ambient temperature inside the panel must be checked.)	0 to 55°C	With a thermometer, check the ambient temperature inside the panel and make sure that it falls within the acceptable range.
		Is the ambient humidity within the acceptable range? (When used in a panel, the ambient humidity inside the panel must be checked.)	10% to 90% RH (with no condensation)	With a hydroscope, check the ambient humidity inside the panel and make sure that it falls within the acceptable range. In particular, check that there is no condensation due to sudden changes in temperature.
		Is the PCU exposed to direct sunlight?	It must not be exposed to direct sunlight.	Shield the PCU from direct sunlight.
		Is there any accumulation of dust (especially iron dust) or salts?	There must be none of these present.	Remove any accumulation of dust (especially iron dust) or salts and protect against them.
		Is the PCU exposed to any spray of water, oil, or chemicals?	It must not be exposed to any of these.	Protect the PCU from water, oil, and chemicals.
		Is the location subject to corrosive or flammable gases?	The PCU must not be exposed to these.	Check for smells or use a gas sensor.
		Is the location subject to shock or vibration?	The amount of shock or vibration must be within the acceptable ranges given in the specifications.	Install a cushion or other device to reduce shock and vibration.
		Is the location near any source of noise?	There must be no noise.	Remove the PCU from the noise source or apply countermeasures.

No.	Item	Inspection points	Criteria	Remarks
3	Installation and wiring	Is the PCU securely mounted?	There must be no looseness.	With a Phillips screwdriver, tighten all mounting screws.
		Are the cable connectors properly inserted and locked?		Carefully insert and lock all cable connectors.
		Are there any loose screws in the external wiring?		With a Phillips screwdriver, tighten all screws in the external wiring.
		Are any external cables disconnected?	There must be no external abnormalities.	Do a visual check and connect or replace cables as required.

Required Tools

The following tools, materials, and equipment are required when performing an inspection.

Phillips screwdriver
Voltage tester or digital voltage meter
Industrial alcohol and a clean cotton cloth

The following measuring devices may be required when performing an inspection.

Synchroscope
Pen oscilloscope
Thermometer
Hydrometer

12-3 Handling Precautions

- Turn OFF the power before replacing the PCU.
- If a PCU is found to be faulty and is replaced, check the new PCU again to ensure there are no errors.
- When returning a faulty PCU for repair, make a detailed record of the PCU's malfunction and take it together with the PCU to your nearest OMRON office or sales representative.
- If a contact is not good, put some industrial alcohol on a clean cotton cloth and wipe the surface. After doing this, install the PCU.

12-4 Procedure for Replacing a PCU

Use the following procedure when it is necessary to replace a PCU.

12-4-1 When PCU Parameters and Operating Data is Set in the CPU Unit's DM Area

1,2,3...

1. Make a note of the unit number of the PCU to be replaced.
2. Save the parameters and operating data for the PCU to be replaced to a floppy disk or a hard disk using, for example, CX-Programmer.
3. Turn OFF the power supply.
4. Make a note of the way in which the PCU is wired. (It is recommended that the cables are labelled.)
5. Replace the PCU, and reconnect the wiring as before.
6. Set the unit number for the PCU.
7. Turn ON the power supply to the PLC.

8. Transfer the saved parameters and operating data to the CPU Unit using, for example, CX-Programmer.
9. Turn the PLC power OFF and back ON.

12-4-2 When PCU Parameters and Operating Data is Saved to the PCU's Flash Memory

1,2,3...

1. Make a note of the unit number of the PCU to be replaced.
2. Save the parameters and operating data for the PCU to be replaced to a floppy disk or a hard disk using CX-Position.
3. Turn OFF the power supply.
4. Make a note of the way in which the PCU is wired. (It is recommended that the cables are labelled.)
5. Replace the PCU, and reconnect the wiring as before.
6. Set the unit number for the PCU.
7. Turn ON the power supply to the PLC.
8. Transfer the saved parameters and operating data to the PLC using CX-Position. After transfer, write the parameters and data to PCU's flash memory.
9. Turn the PLC power OFF and back ON.

Appendix A

Performance Characteristics

This section explains the internal processing of the CS1W-NC□13 Position Control Unit, so it can be used as a reference. The performance values shown in this section are the measurements results obtained under the following conditions.

PLC: CS1H-CPU67 (with no Expansion or Remote Racks)
Position Control Unit: Only one Unit is mounted on the CPU Rack.

Note The performance values shown in this section will vary depending on conditions such as the configuration and settings of the PLC, the user program, and other mounted Units, so use these values for reference only.

Speeds

Due to internal processing, the following difference occurs between the value set as the speed (frequency) and the value actually output from the Unit.

$$\text{Actual speed (pps)} = \frac{16{,}000{,}000}{\text{Round}\left(\dfrac{16{,}000{,}000}{\text{Set value}}\right)}$$

Note The actual speed is obtained within an error range of ±0.02%.

Note Round: Function for rounding the value.

$$\text{Round}\left(\frac{16{,}000{,}000}{\text{Set value}}\right) : \text{Divider ratio}$$

pps: Pulses per second

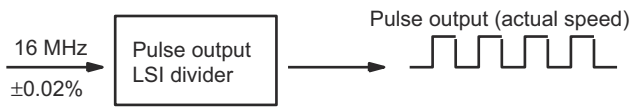

This difference occurs because a 16-MHz source clock is divided by the pulse output LSI divider. An error of ±0.02% also occurs because the source clock is affected by factors such as the temperature. However, this does not affect the positioning accuracy.

Set value (pps)	Actual speed (pps)
500,000	500,000.00
250,000	250,000.00
180,000	179,775.28
140,000	140,350.88
95,000	95,238.10
3,500	3,500.33
92	92.00

Note An additional error of ±0.02% max. occurs in the actual speed.

Power Up Time

When the Position Control Unit is powered up or restarted, the time required for the Unit to complete its initial processing and be ready to recognize the START command is approximately 240 to 300 ms.

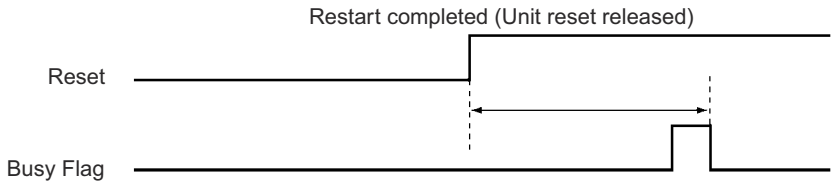

START Execution Time

The time required from when a START command is recognized until pulses are output will vary depending on the combination of positions to be executed.

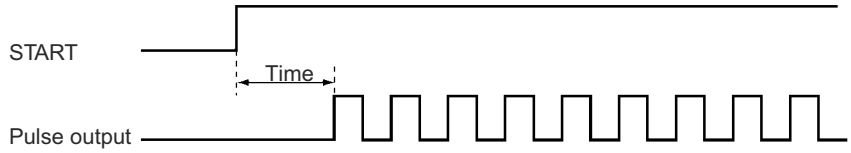

Operation	NC1□3	NC2□3				NC4□3			
		Y-axis starting while X axis is stopped	Y-axis starting while X axis is operating	X-axis and Y-axis simultaneous starting	Interpolation starting from X-axis (2-axis control)	U-axis starting while X, Y, and Z axes are stopped	U-axis starting while X, Y, and Z axes are operating	X, Y, Z, and U-axis simultaneous starting	Interpolation starting from X-axis (4-axis control)
Jogging	2 ms max.	2 ms max.	2.5 ms max.	3 ms max.	---	2 ms max.	3 ms max.	4 ms max.	---
Memory operation	2 ms max.	2 ms max.	3 ms max.	3 ms max.	3 ms max.	2 ms max.	3.5 ms max.	4 ms max.	3.5 ms max.
Direct operation	2 ms max.	2 ms max.	3 ms max.	3 ms max.	---	2 ms max.	3.5 ms max.	4 ms max.	---

Note The conditions under which the values in the above table hold are as follows:

- During the time between the START command being made at the PLC (END refresh) and the time at which pulse output starts, no other commands are output (cycle time: 10 ms).
- The IOWR or IORD instructions are not executed.
- The IORF instruction is not executed.
- The Override Enable Bit is OFF.
- No data saving or data transfer operations are executed.
- Error counter reset output/origin-adjustment command output is OFF.
- CX-Position is not used.
- The following parameter settings are made:
  Maximum speed: 200 kpps
  Initial pulse designation: 1 (maximum speed set with axis' parameters)
  Acceleration/deceleration curve: Trapezoid

Even if the START commands for multiple axes are recognized simultaneously, there will be a discrepancy in the actual pulse output.

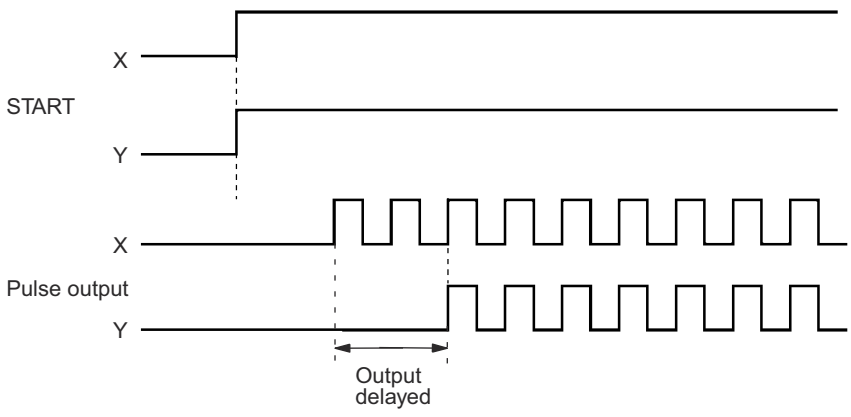

Data Transfer and Data Saving Time

When data is transferred using either the READ DATA or WRITE DATA commands (word n+1, bits 12 and 13), the execution time will vary depending on the number of words of data to be transferred and the PLC cycle time. When using these commands, up to 20 words of data can be sent for each cycle of the ladder program. Consequently, the data transfer execution time is giving by the following:

Data transfer execution time = Data transfer preparation time at the PCU
+ Number of words to be transferred (words) ÷ 20 (words) × Cycle time

When data is transferred using either the IORD and IOWR instructions, the execution time will hardly be affected by the number of words of data to be transferred, and will not be affected at all by the cycle time. The maximum data transfer execution times for transferring positioning sequences, with a PLC cycle time of 2 ms, are shown in the tables below.

Data Reading Time

Amount of data to be read	NC1□3		NC2□3		NC4□3	
	IORD	READ DATA	IORD	READ DATA	IORD	READ DATA
3 words	0.7 ms	13 ms	0.7 ms	13 ms	0.6 ms	13 ms
15 words		13 ms		13 ms		13 ms
30 words		15 ms		15 ms		15 ms
126 words		---		---		---
300 words	---	45 ms	---	50 ms	---	45 ms
772 words (See note.)	---	100 ms	---	105 ms	---	100 ms

Note The time for 772 words is the time to read all the data for one axis from the positioning sequences to zone data.

Data Writing Time

Amount of data to be written	NC1□3		NC2□3		NC4□3	
	IOWR	WRITE DATA	IOWR	WRITE DATA	IOWR	WRITE DATA
3 words	0.7 ms	13 ms	0.7 ms	13 ms	0.6 ms	13 ms
15 words		13 ms		13 ms		13 ms
30 words		15 ms		15 ms		15 ms
126 words		---		---		---
300 words	---	50 ms	---	50 ms	---	50 ms
772 words (See note.)	---	115 ms	---	125 ms	---	120 ms

Note The time for 772 words is the time to write all the data for one axis from the positioning sequences to zone data.

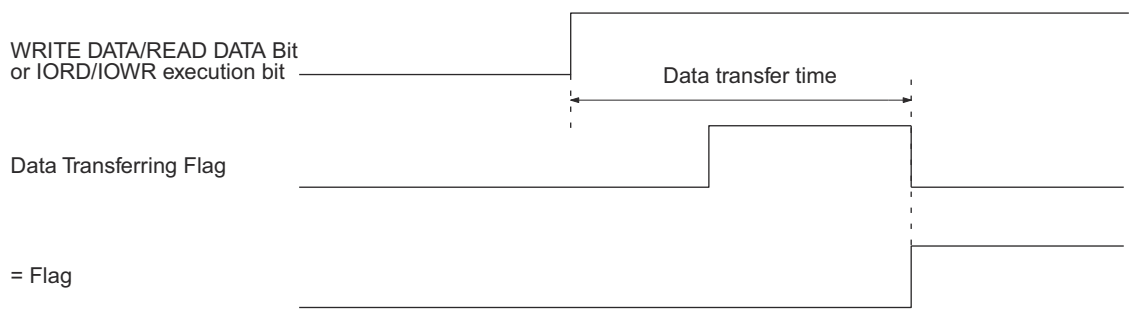

Although the average data saving time is 300 ms, it may be as long as 33 s in some cases. If it is longer than 33 s, a flash memory error (error code 9300) will be generated, and the data saving operation will be interrupted.

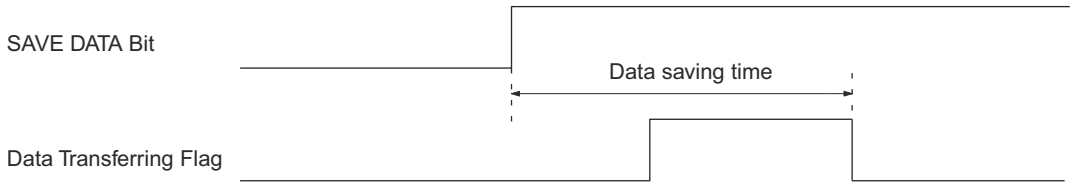

Effect on the Programmable Controller Cycle Time

The PLC's cycle time increases if Units are added, or if the IOWR or IORD instructions are executed. The times by which the cycle time will increase are shown in the following table.

Operation	NC1□3	NC2□3	NC4□3
Time increase for each Unit mounted	0.29 ms	0.32 ms	0.41 ms
Time increase for each execution of the IOWR instruction (max. value)	0.7 ms	0.7 ms	0.6 ms
Time increase for each execution of the IORD instruction (max. value)	0.7 ms	0.7 ms	0.6 ms

Minimum Operation Time

The minimum operation time for the Position Control Unit is 10 ms. With memory operation, when a sequence with a "continuous" completion code is executed and the positioning time for that sequence is shortened according to the amount of movement and the target speed, the operation time required for the continuous completion cannot be assured and positioning will be executed as if the completion code were "automatic." When using a sequence with a "continuous" completion code, be sure to adjust the target speed and target position so that the operation time will be equal to or greater than the minimum operation time.

- Sequence operation time ≥ Minimum operation time

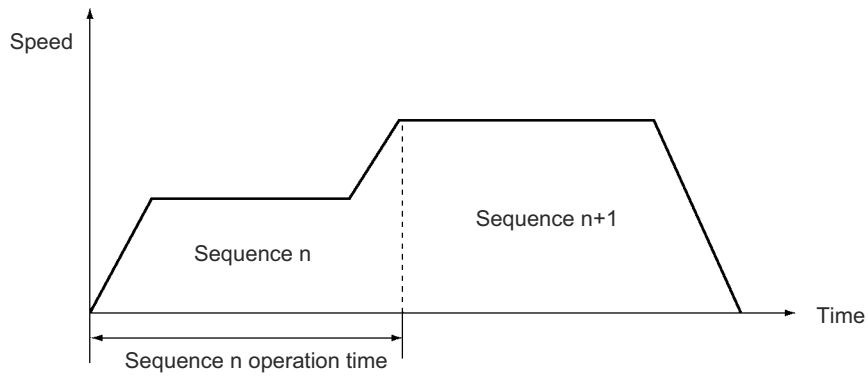

- Sequence operation time < Minimum operation time

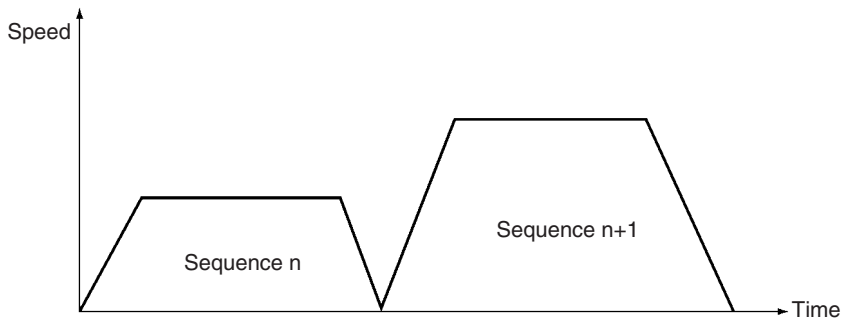

External Interrupt Processing Time

The response time is as shown below with respect to external inputs such as limit sensors and interrupt inputs. The Position Control Unit continues the current operation during the response time for each external input.

Example: Emergency Stop Input

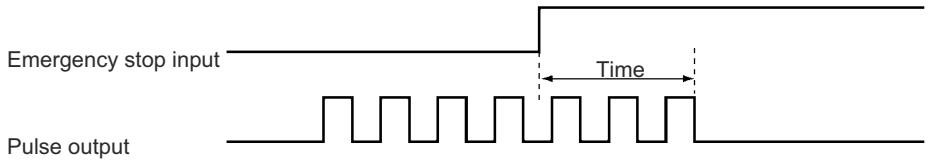

Operation	NC1□3	NC2□3	NC4□3
Emergency stop input	0.4 to 0.47 ms	0.4 to 0.47 ms	0.4 to 0.47 ms
CW/CCW limit input	0.9 to 2.7 ms	0.9 to 2.7 ms	0.9 to 2.7 ms
Interrupt input	0.03 to 0.04 ms	0.03 to 0.04 ms	0.03 to 0.04 ms

Forced Interruption Start Time

When the FORCED INTERRUPT command is executed during memory operation, the response time until the designated sequence is started is as follows:

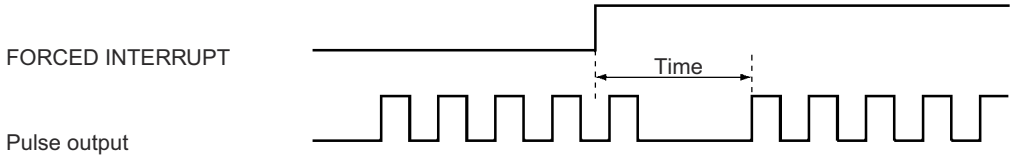

Operation	NC1□3	NC2□3	NC4□3
FORCED INTERRUPT response	3.4 to 5.3 ms	3.6 to 6.2 ms	4.1 to 8 ms

Note The above values are for a PLC cycle time of 10 ms.

Speed Change Response Time in Direct Operation

The target speed can be changed during direct operation by changing the speed data set in the operating data area. The time from when the speed is changed until the change is reflected in the pulse output is as follows:

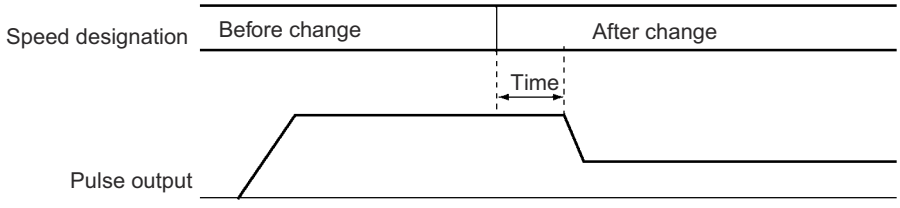

Operation	NC1□3	NC2□3	NC4□3
Speed change response	1.5 to 4.6 ms	1.6 to 4.7 ms	2.3 to 5.7 ms

Note The above values are for a PLC cycle time of 10 ms.

Target Position Change Processing Time in Direct Operation

The target position can be changed during direct operation by changing the position data in the operating data area and restarting the direct operation. The time from when the direct operation is restarted until the position change is reflected in the pulse output is as follows:

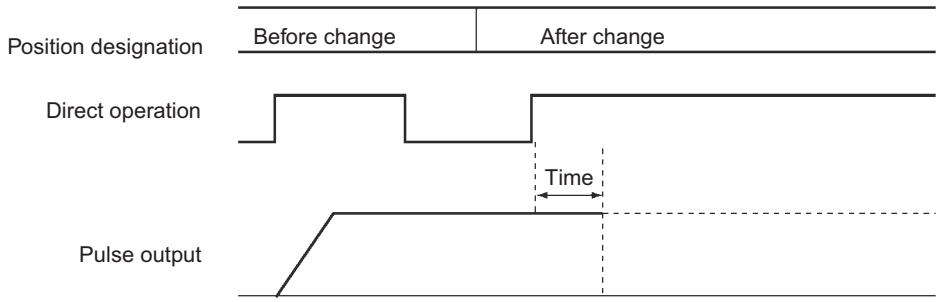

Operation	NC1□3	NC2□3	NC4□3
Position change response	2.8 to 4.9 ms	2.1 to 4.1 ms	2.2 to 5.9 ms

Note The above values are for a PLC cycle time of 10 ms.

Pulse Output Timing for More than One Axis

There will be difference in the times required until pulse output starts for different axes when commands to start operation for more than one axis are made simultaneously from the CPU Unit to the PCU within the same cycle of the ladder program. These time differences are shown below.

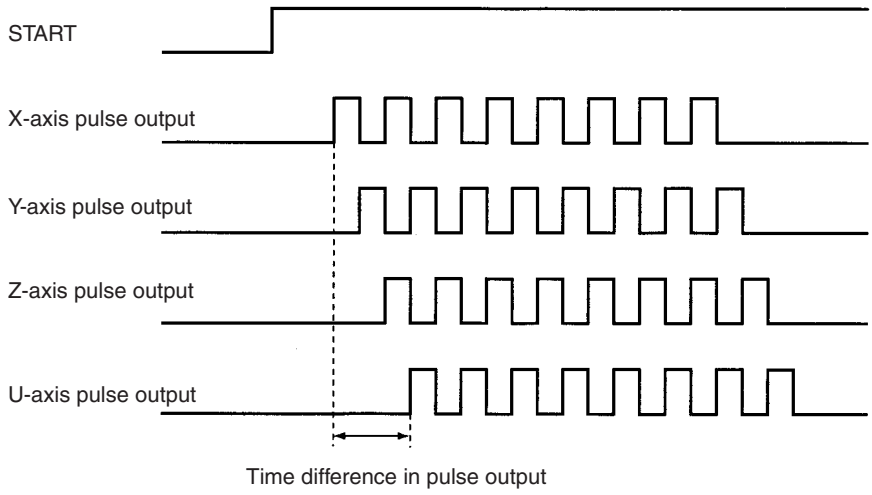

Operation	NC1□3	NC2□3	NC4□3
Commands to start direct operation made to more than one axis simultaneously	---	20 μs max.	20 μs max.
Commands to start memory operation (single-axis operation) made to more than one axis simultaneously			
Command to start memory operation using linear operation (for 2 axes or more)			

Note The figures in the above table are based on the assumption that the maximum speed setting for all the axes is the same and that the initial pulse designation for the axes is 1 (maximum speed setting).

Appendix B

Estimating Times and Pulses for Acceleration/Deceleration

If 0 is set for the acceleration/deceleration time designation in an axis parameter area, the acceleration time is the time it takes to reach the maximum speed from the initial speed (which is also set in the axis parameter area). The deceleration time is the time from the maximum speed to the initial speed. If 1 is set for the acceleration/deceleration time designation, the acceleration or deceleration time is directly set as the time from the present speed to the target speed.
The time it takes to the reach the target speed, the time from the target speed to the initial speed, and the number of pulses for each of them can all be found by means of the formulas shown below when 0 is set for the acceleration/deceleration time designation.

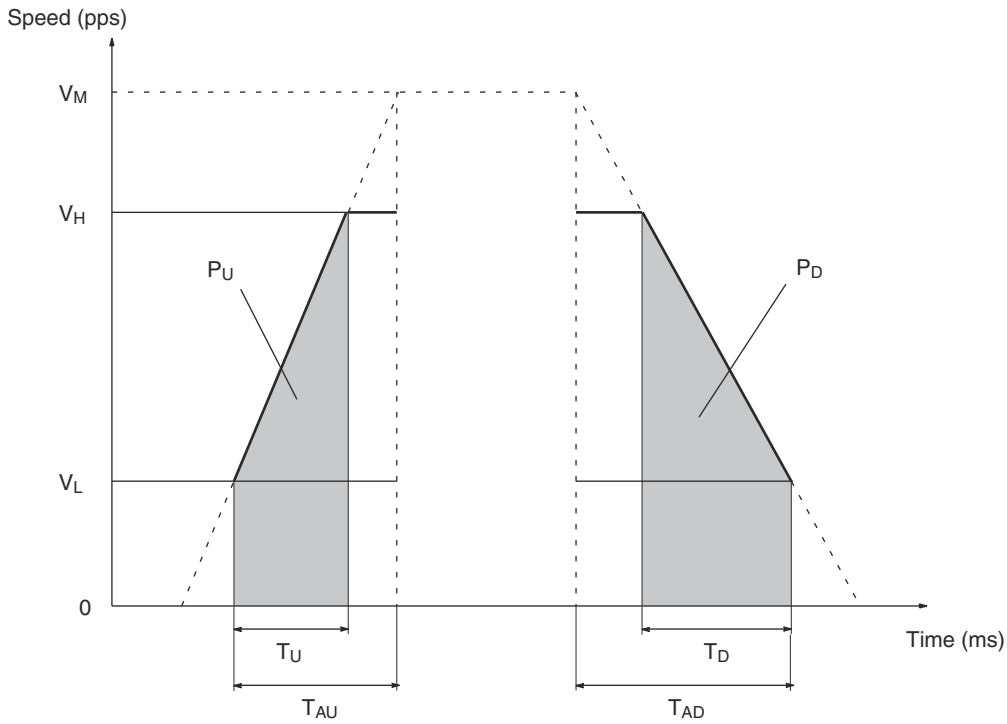

V_M: Maximum speed setting
T_U: Acceleration time from initial speed (V_L) to target speed (V_H)
T_D: Deceleration time from target speed (V_H) to initial speed (V_L)
T_{AU}: Acceleration time setting
T_{AD}: Deceleration time setting

Using the above abbreviations, the number of pulses for the acceleration and deceleration time can be calculated as follows:

$$T_U = \frac{(V_H - V_L)}{(V_M - V_L)} T_{AU}$$

$$T_D = \frac{(V_H - V_L)}{(V_M - V_L)} T_{AD}$$

$$\text{Acceleration pulses } (P_U) = \frac{(V_H + V_L) \times T_U}{2} = \frac{T_{AU}}{2 \times (V_M - V_L)} (V_H + V_L)(V_H - V_L)$$

$$\text{Deceleration pulses } (P_D) = \frac{(V_H + V_L) \times T_D}{2} = \frac{T_{AD}}{2 \times (V_M - V_L)} (V_H + V_L)(V_H - V_L)$$

Example

In this example, numeric settings are entered for the operation pattern shown below.

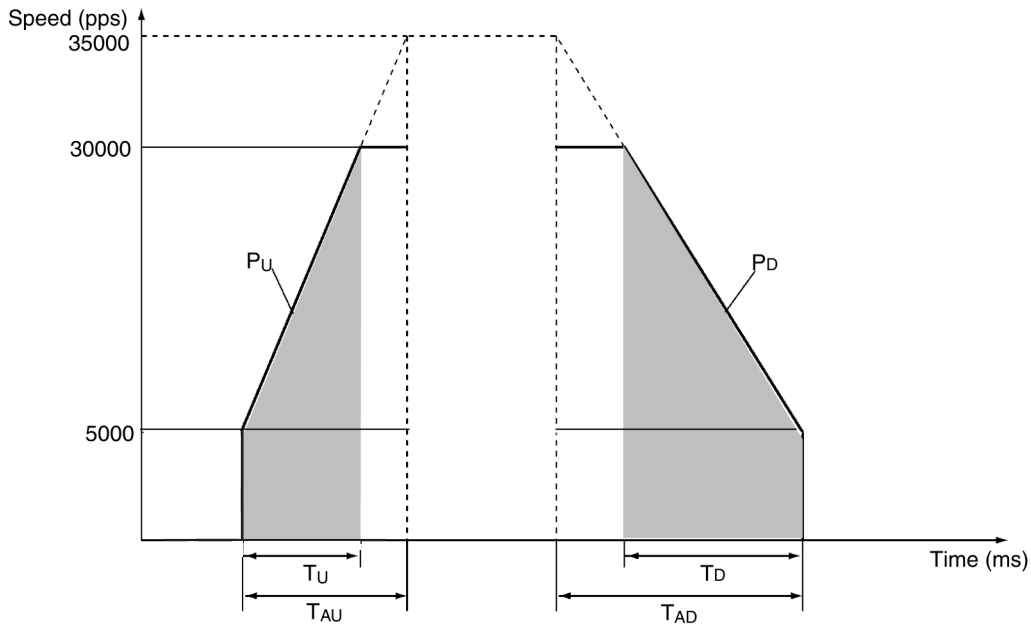

Maximum speed setting: V_M = 35,000 pps
Acceleration time setting: T_{AU} = 400 ms
Deceleration time setting: T_{AD} = 550 ms

$$\text{Acceleration time } (T_U) = \frac{V_H - V_L}{V_M - V_L} T_{AU} = \frac{30000 - 5000}{35000 - 5000} \times 400 \times 10^{-3} = \frac{5}{6} \times 400 \times 10^{-3} = 333 \text{ (ms)}$$

$$\text{Acceleration pulses } (P_U) = \frac{(V_H + V_L) \times T_U}{2} = \frac{(30000 + 5000) \times 333 \times 10^{-3}}{2} = 5827 \text{ (pulses)}$$

Approx. 5800 pulses

$$\text{Deceleration time } (T_D) = \frac{V_H - V_L}{V_M - V_L} T_{AD} = \frac{30000 - 5000}{35000 - 5000} \times 550 \times 10^{-3} = \frac{5}{6} \times 550 \times 10^{-3} = 458 \text{ (ms)}$$

$$\text{Deceleration pulses } (P_D) = \frac{(V_H + V_L) \times T_D}{2} = \frac{(30000 + 5000) \times 458 \times 10^{-3}}{2} = 8015 \text{ (pulses)}$$

Approx. 8000 pulses

The following section describes the deceleration time when the speed command is changed during positioning and the acceleration/deceleration time designation is set to 1.

■ Calculating Deceleration Time If Speed Is Changed during Positioning

If the acceleration/deceleration time designation (m + 19 for the X axis) is set so that the deceleration time is directly set as the time from the present speed to the target speed, the time to reach the target speed and the positioning time will be specified as the time from the present speed until operation stops when positioning is completed. In the following conditions, however, deceleration will start immediately toward 0 pps rather than using the specified deceleration time.

This immediate deceleration will occur when all of the four conditions are met.

1. The acceleration/deceleration time designation is set to directly set the deceleration time as the time from the present speed to the target speed.
2. The speed is changed during positioning.
3. The target speed at that time is less than half of the present speed.
4. The speed is changed at a position beyond the deceleration start limit position calculated from the target speed and deceleration time in condition 3 above.

In other words, consider the deceleration rate for the final deceleration from the target speed to the completion of positioning and determine whether the deceleration rate can be maintained if deceleration is performed from the present position to determine whether deceleration will be preformed in the specified deceleration time.

The following provides a description using a specific example.

Figure 1 illustrates movement to a final target position of 216,000. If the speed is switched to 400 pps in the proximity of 193,000, operation will be performed as in figure 3 rather than figure 2.

Figure 1: Normal Operation

If there is no change in speed, operation will stop at the target position in the specified deceleration time.

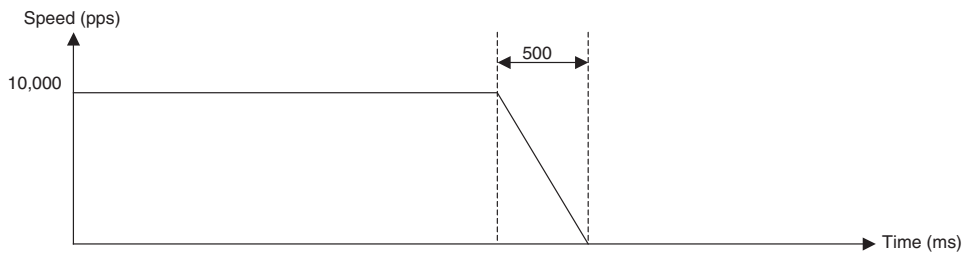

Figure 2:

The Unit may operate as in figure 3 rather than as in figure 2.

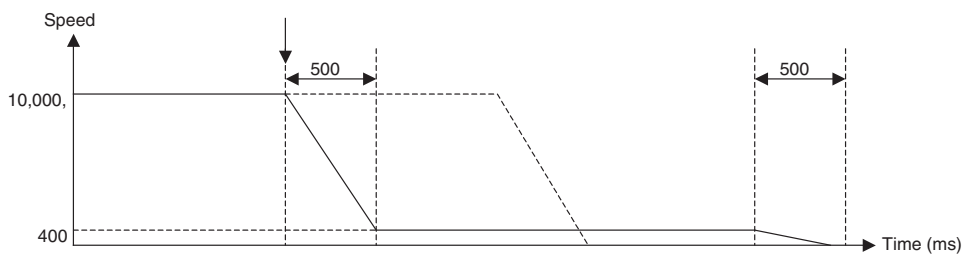

Figure 3:

Calculation of the deceleration start limit for the Unit

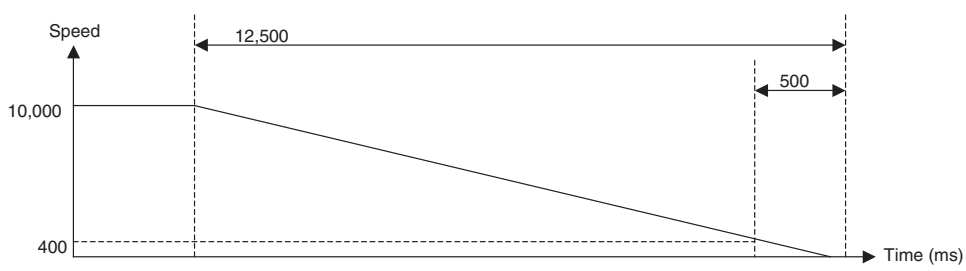

Calculate the deceleration start limit using the formulas below when the speed is changed during positioning with the following condition for the NC Unit (refer to figure 3):

The time from the target speed (400 pps) until operation stops is the set deceleration time of 500 ms.

Deceleration start limit position: The target position will be exceeded if the speed is changed beyond this position. The speed cannot be changed at a position beyond this position, and operation will decelerate to a stop.

A) Calculate the deceleration from 400 pps to 0 pps in 500 ms.
   Deceleration (pps^2) = 400 pps/0.5 s = 800 pps^2

B) Calculate time to reach 0 pps from 10,000 pps at this deceleration.
   Time (s) = 10,000 pps/pps^2
   = 12.5 s = 12,500 ms

C) Calculate the movement required to decelerate from 10,000 pps to 0 pps in this time.

$$\text{Movement (pulses)} = \frac{12.5\ \text{s} \times 10{,}000\ \text{pps}}{2}$$

$$= 62{,}500\ \text{pps}$$

D) Calculate the deceleration start limit position at which the speed can be changed.
   Deceleration start limit position (pulses) = 216,000 − 62,500
   = 153,500 pulses

In this case, changing the speed is determined to not be possible because the speed change is attempted in the proximity of 193,000, which is beyond the deceleration start limit position above.

At a position before 153,500 pulses, however, the speed can be changed as in figure 2.

Appendix C

Common Parameter Area

Beginning word of common parameter area, m = D20000 + 100 × unit number

Word			Data			
NC1□3	NC2□3	NC4□3	15 ← → 00			
m			Operating data area designation 0 / EM bank designation (0 to C)		0	Operating data area designation 0 = Fixed DM Area D = DM, E = EM
m+1			Beginning word of operating data area 16^3	$\times 16^2$	$\times 16^1$	$\times 16^0$
m+2			Specified unused axes (Unit version 2.1 or later)	Axis designation U axis / Z axis / Y axis / X axis		Parameter designation 00 = Parameters saved in the PCU 01 = Parameters in m+4 to m+115
m+3			0	0	0	0

Appendix D

Replacing the C200HW-NC□13

CS-series Position Control Units (PCU) are available in both open collector output models and line driver output models. When replacing the C200HW-NC413/213/113 with a CS-series PCU, use the appropriate model in the following table.

Previous model	New model
C200HW-NC413	CS1W-NC413
C200HW-NC213	CS1W-NC213
C200HW-NC113	CS1W-NC113

The steps required to replace the PCUs are given below.

Peripheral Devices

Cables, terminal blocks, power supplies, wiring can be used as they are. No changes are required.

Support Software

SYSMAC-NCT cannot be used. Use CX-Position instead.

PCU's Parameters and Operating Data

With C200H-series PCUs, most of the parameters and operating data were in BCD format. With CS-series PCUs, the parameters and operating data area in hexadecimal (binary) format. For this reason, it is necessary to change the parameters and data.

All parameters and operating data, excluding the common parameters, can be automatically converted to the CS-series format using CX-Position. Details of the conversion in the case where the parameters and operating data are set at the CPU Unit are given below.

When the data is converted to binary format, the number of words required for the parameter settings increases. Rearrange and convert the parameters with reference to *Section SECTION 4*.

Parameter Conversion

Group	Previous parameter	Details
Common parameters	Operating data area designation	No conversion necessary.
	Beginning word of operating data area	Convert to unsigned 16-bit binary data.
	PCU mounting position and parameter designation	Change the PCU mounting position setting to 00.
Axis parameters	I/O settings	No conversion necessary.
	Operation mode selection	No conversion necessary.
	Maximum speed	Convert the 1-word settings containing multiplication factors to 2–word, unsigned, 32-bit binary settings (unit: pps).
	Initial speed	
	Origin search high speed	
	Origin search proximity speed	
	Origin compensation	Convert to signed 32-bit binary data.
	Backlash compensation	Convert to unsigned 16-bit binary data.
	Backlash compensation speed	Convert the 1-word setting containing a multiplication factor to a 2–word, unsigned, 32-bit binary setting (unit: pps).
	Acceleration/Deceleration curve	No conversion necessary.
	Acceleration time	Convert to unsigned 32-bit binary data.
	Deceleration time	
	Positioning monitor time	Convert to unsigned 16-bit binary data.
	CCW software limit	Convert to signed 32-bit binary data.
	CW software limit	

Data Conversion

Previous data	Details
Positioning sequences	With CS-series PCUs, in addition to changing the format for position data to binary, a flag (the position designation) has been added to the positioning sequences that indicates whether the position data is absolute or relative. For this reason, check the position designation (i.e., whether it is absolute or relative) for the position data in the previous format, and reflect this in the position designation in the (new) positioning sequence. For example, if positioning sequence 0 uses X-axis position number 0, and this position data is for relative positioning, set the X-axis position designation for positioning sequence 0 to 1. The total number of words of data is the same.
Speeds	Convert the 1-word settings containing multiplication factors to 2–word, unsigned, 32-bit binary settings (unit: pps). The total number of words of data will be twice the number in the previous format.
Positions	Convert to signed 32-bit binary data. In the new format, the position designation (relative or absolute) is set in the positioning sequences. With CS-series PCUs, there is no distinction made between relative or absolute in the position data itself. This distinction is made in the positioning sequence. The total number of words of data is the same.
Acceleration times	Convert to unsigned 32-bit binary data. The total number of words of data is the same.
Deceleration times	
Dwell times	Convert to unsigned 16-bit binary data. The total number of words of data is the same.
Zones	Convert to signed 32-bit binary data. The total number of words of data is the same.

Ladder Programming

Converting parameters and operating data to binary format has resulted in changes in the bits and addresses used to exchange information commands and data between the ladder program and the PCU. The main differences are explained below. For more details on the differences to the ladder program, refer to *SECTION 4* and *SECTION 5*.

Changes in Operating Memory Area and DM Area Allocations

The addresses of the operating memory area and the DM Area words differs in the way shown below.

- Operating Memory Area
  Unit numbers 0 to 9:100 + (unit number × 10) → 2000 + (unit number × 10)
  Unit numbers A to F:400 + (unit number × 10) → 2000 + (unit number × 10)

- DM Area
  DM 1000 + (unit number × 100) → D20000 + (unit number × 100)

Settings Exchanged between the Operating Memory Area and Operation Data Area

- The following data has been moved from the operating memory area to the operating data area: positioning sequences, output codes, present positions.
- The following data has been moved from the operating data area to the operating memory area: monitoring information for I/O signals, error codes.

Data Conversion for Operating Data Area

- The format has been changed from BCD to binary.
- The following data has been changed to a 1-word configuration: positioning sequences, output codes, teaching addresses.
- In addition to conversion to binary format, area designations have been added to the following data used for data transfer: number of transfer (read or write) words, transfer (write) destination address, transfer (write) source word, transfer (read) destination word, transfer (read) source address.
- The acceleration and deceleration times used in direct operation and origin return were specified by number, but are now time settings.
- The speed designations used in direct operation and origin return consisted of one word of data containing a multiplication factor, but now consist of two words of binary data without a multiplication factor.

Changes in PCU Addresses

- At data transfer, PCU internal addresses were specified in decimal but are now specified in hexadecimal.
- With the change to hexadecimal format, although the beginning address for axis parameters and the beginning addresses for the operating data of each of the axes are the same, addresses after that have changed.

IOWR Instruction

Previously, even if the IOWR instruction was used more than once in the ladder program, all the data transfer operations were completed within one scan. With CS-series PCUs, however, it may take several scans before all the data is transferred. When executing the IOWR instruction with CS-series PLCs, two words are used to specify the destination unit number and the number of transfer words. For details, refer to *5-4 Writing Data with IOWR*.

STOP Bit

Previously, axis operation was possible even with the STOP Bit turned ON, but with CS-series PCUs, it is not. Also, when the STOP Bit and FORCED INTERRUPT Bit were turned ON simultaneously, the FORCED INTERRUPT Bit would take priority, but with CS-series PCUs, the STOP Bit is given priority. For details, refer to *9-5 Deceleration Stop*.

Releasing Pulse Output Prohibition

Previously, it was not possible to clear only error codes to 0, but with CS-series PCUs, it is possible to clear error codes to 0 by turning ON the ERROR RESET/RELEASE PROHIBIT Bit.

Appendix E
Error Code Lists

Data Check at Startup

The following table shows the errors checked when power is turned ON.

Group	Name	Code
Data destruction	Parameters destruction	0001
	Data destruction	0002
	F-ROM check data destruction	0003
Common parameters	Operating data area designation error	0010
	Operating data area address designation error	0011
	Parameter designation error	0013
	Axis designation error	0014
Axis parameters	Response timeout	0020
Initial speed	Initial speed error	1000
	Initial pulse designation error	1001
Maximum speed	Maximum speed error	1010
Acceleration/deceleration data	Acceleration time error	1310
	Deceleration time error	1320
	Acceleration/Deceleration curve error	1330
	Positioning monitor time error	1332
Origin search	Origin compensation error	1600
	Origin search high speed error	1601
	Origin search proximity speed error	1602
	Origin search speed inconsistent	1603
	Operation mode selection error	1604
	Origin search operation error	1605
	Origin search direction error	1606
	Origin detection method error	1607
Backlash compensation	Backlash compensation error	1700
	Backlash compensation speed error	1710
Software limits	CW software limit error	1800
	CCW software limit error	1801
Sensor inputs	Emergency stop input	6000
	CW limit stop	6100
	CCW limit stop	6101

Command Execution Check

Data Checks for Data-writing Commands

Item	Name	Code
Initial speed	Initial speed error	1000
	Initial pulse designation error	1001
Maximum speed	Maximum speed error	1010
Acceleration/ Deceleration data	Acceleration time error	1310
	Acceleration time error	1311 to 1319
	Deceleration time error	1320
	Deceleration time error	1321 to 1329
	Acceleration/Deceleration curve error	1330
	Positioning monitor time error	1332
Speed data	Speed error	1500 to 1599
Origin search	Origin compensation error	1600
	Origin search high speed error	1601
	Origin search proximity speed error	1602
	Origin search speed inconsistent	1603
	Operation mode selection error	1604
	Origin search operation error	1605
	Origin search direction error	1606
	Origin detection method error	1607
Backlash compensation	Backlash compensation error	1700
	Backlash compensation speed error	1710
Software limits	CW software limit error	1800
	CCW software limit error	1801
Zones	Zone 0 CW error	1900
	Zone 0 CCW error	1901
	Zone 1 CW error	1910
	Zone 1 CCW error	1911
	Zone 2 CW error	1920
	Zone 2 CCW error	1921
Position data	Target position error	2000 to 2099
Positioning sequences	Sequence data error	3000 to 3099
Dwell times	Dwell time error	4001 to 4019

Initial Operation Error Checks and Checks During Operation

Group	Name	Code
Software limits	CW software limit value	5030
	CCW software limit value	5031
Origin	Current position unknown	5040
Limit stop	Stopped at CW limit	5060
	Stopped at CCW limit	5061
Software limits (JOG)	Manual CW software limit	5070
	Manual CCW software limit	5071
Sensor inputs	Emergency stop input	6000
	CW limit stop	6100
	CCW limit stop	6101
Origin search	No origin proximity input signal	6200
	No origin input signal	6201
	Origin input signal error	6202
	Limit inputs in both directions	6203
	Simultaneous origin proximity and limit signals	6204
	Limit input already being input	6205
Origin search	Origin proximity/origin reverse error	6206
Absolute movement command	Absolute movement position error	7000
	Absolute movement speed error	7001
	Absolute movement acceleration time error	7002
	Absolute movement deceleration time error	7003
Relative movement command	Relative movement position error	7100
	Relative movement speed error	7101
	Relative movement acceleration time error	7102
	Relative movement deceleration time error	7103
Interrupt feeding	Interrupt feeding position error	7200
	Interrupt feeding speed error	7201
	Interrupt feeding acceleration time error	7202
	Interrupt feeding deceleration time error	7203
Origin return	Origin return error	7300
	Origin return acceleration time error	7301
	Origin return deceleration time error	7302
Present position	Present position error	7400
JOG	JOG speed error	7500
	JOG acceleration time error	7501
	JOG deceleration time error	7502
Multiple axis start	Multiple axis start	8000
Memory operation	Speed error	8104

Other Error Checks

Group	Name	Code
Teaching	Teaching address error	8200
	Teaching range error	8201
Data transfer	Write transfer: number of words error	8310
	Write transfer: source word error	8311
	Write transfer: destination address error	8312
	Read transfer: number of words error	8320
	Read transfer: source address error	8321
	Read transfer: destination word error	8322
Error counter reset/ Origin adjustment output	Error counter reset/origin adjustment output error	8400
Override	Override error	8500
Positioning	Positioning timer timeout	8600
	Overflow	8601
Intelligent Read/Write	IORD format error	8700
	IOWR format error	8701
Flash memory	Flash memory error	9300

Appendix F

Parameter Coding Sheets

MACHINE No. □ **□NC1□3** **□NC2□3□** **NC4□3**

Customer name:	Machine name:	Prepared by:

Common Parameters

15←		→00		DM number	Function
0		0		00	EM bank designation (bits 08 to 11: 0 to C) Operating data area designation (bits 00 to 03: 0 = fixed DM, D = DM, E = EM)
				01	Beginning word of operating data area
				02	Axis designation (bits 08 to 11: X axis to U axis) Parameter designation (bits 00 to 03; 0: parameters saved in PCU; 1: parameters in m+4 to m+115)
0		0			
0	0	0	0	03	Reserved

Axis Parameters

NC1 3					NC2 3					NC4 3											
X axis					Y axis					Z axis					U axis						
15	←→		00		15	←→		00		15	←→		00		15	←→		00			Function
0				04	0				32	0				60	0				88	I/O setting
				05					33					61					89	Operation mode selection
				06					34					62					90	Maximum speed
0	0	0		07	0	0	0		35	0	0	0		63	0	0	0		91	
				08					36					64					92	Initial speed
0	0	0		09	0	0	0		37	0	0	0		65	0	0	0		93	
				10					38					66					94	Origin search high speed
0	0	0		11	0	0	0		39	0	0	0		67	0	0	0		95	
				12					40					68					96	Origin search proximity speed
0	0	0		13	0	0	0		41	0	0	0		69	0	0	0		97	
				14					42					70					98	Origin compensation
				15					43					71					99	
				16					44					72					100	Backlash compensation
				17					45					73					101	Backlash compensation speed
0	0	0		18	0	0	0		46	0	0	0		74	0	0	0		102	
0	0	0		19	0	0	0		47	0	0	0		75	0	0	0		103	Acceleration/deceleration curve
				20					48					76					104	Origin search acceleration time
0	0	0		21	0	0	0		49	0	0	0		77	0	0	0		105	
				22					50					78					106	Origin search deceleration time
0	0	0		23	0	0	0		51	0	0	0		79	0	0	0		107	
				24					52					80					108	Positioning monitor time
				25					53					81					109	CCW software limit
				26					54					82					110	
				27					55					83					111	CW software limit
				28					56					84					112	
0	0	0	0	29	0	0	0	0	57	0	0	0	0	85	0	0	0	0	113	Reserved
0	0	0	0	30	0	0	0	0	58	0	0	0	0	86	0	0	0	0	114	
0	0	0		31	0	0	0		59	0	0	0		87	0	0	0		115	Initial pulse designation

See *I/O Setting* on the next page

See *Operation Mode Selection* on the next page.

I/O Setting

Bit	Item	Setting details
00	Output pulse selection	0: CW/CCW output 1: Pulse direction output
01	CW/CCW pulse output direction selection	Supported for unit version 2.2 or later. (See note.)
02 to 03	Reserved	Set to 0.
04	Limit input signal type	0: N.C. contact; 1: N.O. contact
05	Origin proximity input signal type	0: N.C. contact; 1: N.O. contact
06	Origin input signal type	0: N.C. contact; 1: N.O. contact
07	Emergency stop input signal	0: Pulse output stop 1: Pulse output stop and error counter reset signal output (modes 1 and 2)
08	Origin undefined designation	0: Retain prior status. 1: Forcibly change to origin undefined status.
09 to 15	Reserved	Set to 0.

Note The following operations are performed using the combinations of output pulse selection.

CW/CCW pulse output direction selection	Output pulse selection	
	0: CW/CCW outputs	1: Pulse/direction outputs
0	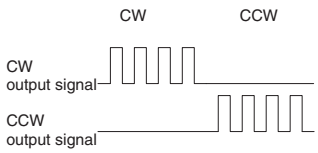	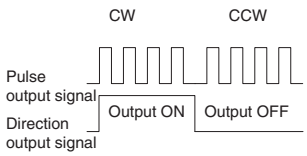
1	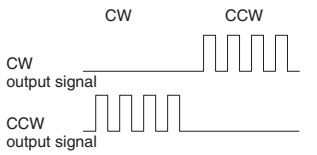	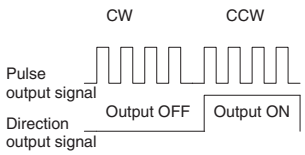

Operation Mode Selection

Bit	Item	Setting details
00 to 03	Operation mode	0 (Mode 0): Uses stepping motor, and uses external sensor signal as origin input signal. 1 (Mode 1): Uses Servo Drive, and uses encoder's Z-phase signal for origin input signal. Does not use positioning completed input signal. 2 (Mode 2): Same as Mode 1, but uses positioning completed input signal. 3 (Mode 3): Uses a Servo Drive with an origin adjustment function. Origin search is completed by Servo Drive's origin adjustment command. Uses positioning completed input signal.
04 to 07	Origin search operation	0: Reverse mode 1 (reverse at limit input) Detects origin in designated origin search direction. 1: Reverse mode 1 (Error stop at limit input) Detects origin in designated origin search direction. 2: Single-direction mode (No reverse)
08 to 11	Origin detection method	0: Takes origin input signal after origin proximity input signal turns ON (↑) and OFF (↓). 1: Takes origin input signal after origin proximity input signal turns ON (↑). 2: Takes origin input signal without using origin proximity input signal. 3: Takes origin input signal after limit input signal turns ON (↑) and OFF (↓), or OFF (↓), without using origin proximity input signal. (Enabled only for single-direction mode.)
12	Origin search direction	0: CW direction 1: CCW direction
13	Origin search preset	0: Not set (default). 1: Set. (supported for unit version 2.2 or later)
14 and 15	Reserved	Set to 0.

Memory Operation Data

NC1□3		NC2□3		NC4□3				
X axis		Y axis		Z axis		U axis		
15 ← → 00	Designated area	15 ← → 00	Designated area	15 ← → 00	Designated area	15 ← → 00	Designated area	Function
								Positioning sequence No. □□
								Positioning sequence No. □□
								Positioning sequence No. □□
								Positioning sequence No. □□
								Positioning sequence No. □□
								Positioning sequence No. □□
								Positioning sequence No. □□
								Positioning sequence No. □□
								Positioning sequence No. □□
								Positioning sequence No. □□

15 – 12	11 – 08	07 – 04	03 – 00
Axis designation	Output code	Position designation	Completion code
Dwell time number		Accel. time number	Decel. time number
Initial speed number		Target speed number	

Axis designation:	Set the bits for active axes to "1." Bit 15: U axis; 14: Z axis; 13: Y axis; 12: X axis
Output code:	00 to 0F Hex
Position designation:	Specify whether the position data for each of the axes is the absolute position or relative position. Bit 7: U axis; 6: Z axis; 5: Y axis; 4: X axis 0: absolute position; 1: relative position
Completion code:	00 to 06 Hex (0 to 6)
Dwell time No.	00 to 13 Hex (0 to 19)
Acceleration time No.	0 to 9 Hex (0 to 9)
Deceleration time No.	0 to 9 Hex (0 to 9)
Initial/Target speed No.:	00 to 63 Hex (0 to 99)

NC1□3					NC2□3					NC4□3										
X axis				Designated area	Y axis				Designated area	Z axis				Designated area	U axis				Designated area	
15 ←			→ 00		15 ←			→ 00		15 ←			→ 00		15 ←			→ 00		Function
																				Speed No. □□
0	0	0			0	0	0			0	0	0			0	0	0			
																				Speed No. □□
0	0	0			0	0	0			0	0	0			0	0	0			
																				Speed No. □□
0	0	0			0	0	0			0	0	0			0	0	0			
																				Speed No. □□
0	0	0			0	0	0			0	0	0			0	0	0			
																				Speed No. □□
0	0	0			0	0	0			0	0	0			0	0	0			
																				Speed No. □□
0	0	0			0	0	0			0	0	0			0	0	0			
																				Speed No. □□
0	0	0			0	0	0			0	0	0			0	0	0			
																				Speed No. □□
0	0	0			0	0	0			0	0	0			0	0	0			
																				Speed No. □□
0	0	0			0	0	0			0	0	0			0	0	0			
																				Speed No. □□
0	0	0			0	0	0			0	0	0			0	0	0			
																				Speed No. □□
0	0	0			0	0	0			0	0	0			0	0	0			
																				Speed No. □□
0	0	0			0	0	0			0	0	0			0	0	0			
																				Speed No. □□
0	0	0			0	0	0			0	0	0			0	0	0			
																				Speed No. □□
0	0	0			0	0	0			0	0	0			0	0	0			
																				Speed No. □□
0	0	0			0	0	0			0	0	0			0	0	0			
																				Speed No. □□
0	0	0			0	0	0			0	0	0			0	0	0			
																				Speed No. □□
0	0	0			0	0	0			0	0	0			0	0	0			
																				Speed No. □□
0	0	0			0	0	0			0	0	0			0	0	0			
																				Speed No. □□
0	0	0			0	0	0			0	0	0			0	0	0			
																				Speed No. □□
0	0	0			0	0	0			0	0	0			0	0	0			

NC1□3		NC2□3		NC4□3				
X axis		Y axis		Z axis		U axis		
15 ← → 00	Designated area	15 ← → 00	Designated area	15 ← → 00	Designated area	15 ← → 00	Designated area	Function
								Position No. □□
								Position No. □□
								Position No. □□
								Position No. □□
								Position No. □□
								Position No. □□
								Position No. □□
								Position No. □□
								Position No. □□
								Position No. □□
								Position No. □□
								Position No. □□
								Position No. □□
								Position No. □□
								Position No. □□
								Position No. □□
								Position No. □□
								Position No. □□
								Position No. □□
								Position No. □□

NC1□3					NC2□3					NC4□3										
X axis					Y axis					Z axis					U axis					
15 ←	→		00	Designated area	15 ←	→		00	Designated area	15 ←	→		00	Designated area	15 ←	→		00	Designated area	Function
																				Acceleration time No. □□
0	0	0			0	0	0			0	0	0			0	0	0			
																				Acceleration time No. □□
0	0	0			0	0	0			0	0	0			0	0	0			
																				Acceleration time No. □□
0	0	0			0	0	0			0	0	0			0	0	0			
																				Acceleration time No. □□
0	0	0			0	0	0			0	0	0			0	0	0			
																				Acceleration time No. □□
0	0	0			0	0	0			0	0	0			0	0	0			
																				Acceleration time No. □□
0	0	0			0	0	0			0	0	0			0	0	0			
																				Acceleration time No. □□
0	0	0			0	0	0			0	0	0			0	0	0			
																				Acceleration time No. □□
0	0	0			0	0	0			0	0	0			0	0	0			
																				Acceleration time No. □□
0	0	0			0	0	0			0	0	0			0	0	0			
																				Deceleration time No. □□
0	0	0			0	0	0			0	0	0			0	0	0			
																				Deceleration time No. □□
0	0	0			0	0	0			0	0	0			0	0	0			
																				Deceleration time No. □□
0	0	0			0	0	0			0	0	0			0	0	0			
																				Deceleration time No. □□
0	0	0			0	0	0			0	0	0			0	0	0			
																				Deceleration time No. □□
0	0	0			0	0	0			0	0	0			0	0	0			
																				Deceleration time No. □□
0	0	0			0	0	0			0	0	0			0	0	0			
																				Deceleration time No. □□
0	0	0			0	0	0			0	0	0			0	0	0			
																				Deceleration time No. □□
0	0	0			0	0	0			0	0	0			0	0	0			
																				Deceleration time No. □□
0	0	0			0	0	0			0	0	0			0	0	0			

NC1□3			NC2□3			NC4□3						
X axis			Y axis			Z axis			U axis			
15 ← → 00		Designated area	15 ← → 00		Designated area	15 ← → 00		Designated area	15 ← → 00		Designated area	Function
0			0			0			0			Dwell time No. 1
0			0			0			0			Dwell time No. 2
0			0			0			0			Dwell time No. 3
0			0			0			0			Dwell time No. 4
0			0			0			0			Dwell time No. 5
0			0			0			0			Dwell time No. 6
0			0			0			0			Dwell time No. 7
0			0			0			0			Dwell time No. 8
0			0			0			0			Dwell time No. 9
0			0			0			0			Dwell time No. 10
0			0			0			0			Dwell time No. 11
0			0			0			0			Dwell time No. 12
0			0			0			0			Dwell time No. 13
0			0			0			0			Dwell time No. 14
0			0			0			0			Dwell time No. 15
0			0			0			0			Dwell time No. 16
0			0			0			0			Dwell time No. 17
0			0			0			0			Dwell time No. 18
0			0			0			0			Dwell time No. 19
												Zone #0, CCW side
												Zone #0, CW side
												Zone #1, CCW side
												Zone #1, CW side
												Zone #2, CCW side
												Zone #2, CW side

Index

A

acceleration time
  estimating, 349
applications
  precautions, xxii
automatic completion
  in memory operation, 210
axis designation
  for memory operation, 197
axis parameters
  coding sheet, 364
axis parameters area
  details, 77

B

backlash compensation
  basic explanation, 7
backlash compensation operation
  explanation, 252
  with linear interpolation, 254
bank end completion
  in memory operation, 212

C

cables, 44
changing present position
  basic explanation, 7
commands
  ORIGIN RETURN, 172
  ORIGIN SEARCH
    examples in mode 0, 45, 46
    examples in mode 1, 47, 48
    examples in mode 2, 50, 51
common parameters
  coding sheet, 363
completion codes
  for memory operation, 209
connections and circuitry, 265
continuous completion
  in memory operation, 210
  with linear interpolation, 215
control bits
  ABSOLUTE MOVEMENT, 95
  direction designation, 95
  error counter reset output, 95
  FORCED INTERRUPT, 95
  INDEPENDENT START, 95
  INTERRUPT FEEDING, 95
  JOG, 95
  origin adjustment command output, 95
  ORIGIN RETURN, 95
  ORIGIN SEARCH, 95
  override enable, 95
  PRESENT POSITION PRESET, 95
  READ DATA, 96
  Read Data, 126
  RELATIVE MOVEMENT, 95
  RELEASE PROHIBIT, 95
  SAVE DATA, 96
  sequence number enable, 95
  START, 95
  STOP, 95
  TEACH, 95
  WRITE DATA, 96
  Write Data, 121
control system principles, 13
CX-Position
  creating and transferring data, 144

D

data
  reading with IORD, 138
  reading with the Read Data bit, 126
  saving, 142
  time required to read data, 345
  time required to write data, 345
  writing with IOWR, 131
  writing with the Write Data bit, 122
data areas
  overall structure, 64
data calculation standards, 343
data flow diagram, 13
deceleration stop
  basic explanation, 8
  during origin search, 169
  during positioning, 243
deceleration stop operation
  explanation, 240
deceleration time
  estimating, 349
direct operation
  program examples, 281
  sample program, 189
  starting, 181

E

EC Directives, xxiv
emergency stop
  during origin search, 170
emergency stop input, 78
  processing time, 347
error counter reset
  wiring, 40
error counter reset output
  explanation, 249
error counters, 13
error indicators, 314
external interrupt processing time, 347

F

flags
  busy, 97
  data transferring, 97
  deceleration stop execution, 97
  error, 97
  no origin, 97
  origin stop, 97
  positioning completed, 97
  teaching completed, 97
  waiting for memory operation, 97
  zone 0, 97
  zone 1, 97
  zone 2, 97
flash memory, 142
forced interrupt
  processing time, 347
forced interrupt operation
  explanation, 238

I

I/O electrical specifications, 34–35
inductive loads, 44
inspection, 340
  tools, 341
instruction execution errors
  description, 313
  instruction execution checks, 322, 360
INTELLIGENT I/O READ
  See also IORD
INTELLIGENT I/O WRITE
  See also IOWR
interrupt feeding completion
  in memory operation, 212
interrupt feeding operation, 235
IORD
  specifications, 138
IOWR
  specifications, 132

J

JOG operation
  explanation, 231

L

LED indicators
  error indicators, 314
limit input signal type, 78
linear interpolation, 213
  program examples, 287
  with backlash compensation operation, 254
  with continuous completion, 215

M

magnetizing distribution circuits, 13
memory operation
  completion codes, 209
  program examples, 266
  sample program, 226
  starting, 209
  starting direct operation during, 184
modes
  origin search mode 0
    connection, 45
  origin search mode 1
    connection, 47
  origin search mode 2
    connection, 50
multiple starts
  with direct operation, 181

N-O

noise (electronic)
  prevention, 43
open-loop systems, 14
operating data area
  details, 98, 99

operating environment
precautions, xxi
operation mode
description of operation modes, 80
setting, 79
operation patterns, 165
origin adjustment command output
explanation, 249
origin compensation
and operation patterns, 165
origin compensation value, 165
origin detection method
setting, 80
origin proximity signal type, 78
origin return, 172
origin search
basic explanation, 7
effect of deceleration stop, 169
effect of emergency stop, 170
program examples, 293
with origin proximity signal, 154
without origin proximity signal, 154
origin search direction
setting, 80
origin search operation
setting, 79
origin signal type, 78
origin undefined designation, 78
output pulse selection, 77
override
basic explanation, 7
override operation
explanation, 246
program example, 296

P

parameter coding sheets, 363
pass time
and operation time, 346
positioning
with absolute value, 5
with incremental value, 5
power amplifiers, 13
power lines, 44
power supply, 36, 44
24 VDC, 38
24-VDC, 36, 37
precautions
applications, xxii
general, xix, xx
operating environment, xxi
safety, xx
PRESENT POSITION PRESET
explanation, 171
program examples
cancelling positioning, 275
changing speed during continuous output, 296
checking positioning operations, 266
copying data, 299
inching, 284
origin search using limit input, 293
positioning with positions in DM, 281
repeat operation, 271
two-axis linear interpolation, 287
pulse generators, 13
pulse rate
computation of, 14
pulse trains, 13, 14

R

reading data
example program, 129, 141
time required, 345
with IORD, 138
with Read Data bit, 126
resistors
built-in, 36
response time
for speed change, 347
for target position change, 348
rotary encoders, 13

S

safety precautions, xx
saving data, 142
program examples, 299
sequences #0 through #99
setting, 102
Servo Drives, 13
servomotor, 13
signals
direction
connecting, 38
external sensor, 45

origin, 46
origin proximity, 46, 48, 51, 154
origin search completed, 43
output pulses
connecting, 38
positioning completed, 43
Z-phase, 48, 51
solenoids, 44
speed calculations, 343
speed control completion
in memory operation, 212
startup errors
data check at startup, 318, 359
description, 313
startup procedures, 264
stepping motor drivers, 13
stepping motors, 13, 14
angle of rotation, 14
used with external sensor, 45
with continuous linear interpolation, 215
surge absorbers, 44

T

tachogenerators, 13
teaching
basic explanation, 7
teaching operation
explanation, 233
terminals
with and without resistance, 31
terminating completion
in memory operation, 209
timing charts
for deceleration stop operation, 245
for direct operation, 184
for error counter reset output, 250
for forced interrupt operation, 240
for interrupt feeding operation, 237
for JOG operation, 232
for memory operation, 219
for origin adjustment command output, 250
for origin return, 173
for origin search, 166
for override operation, 248
for RESET PRESENT POSITION, 172
for teaching operation, 234
transferring data
program examples, 299
time required, 345

W-Z

wiring
error counter reset, 40
I/O circuit diagrams, 31
precautions, 43–61
writing data
example program, 126, 137
time required, 345
with IOWR, 131
with Write Data bit, 122
zones
basic explanation, 8

Revision History

A manual revision code appears as a suffix to the catalog number on the front cover of the manual.

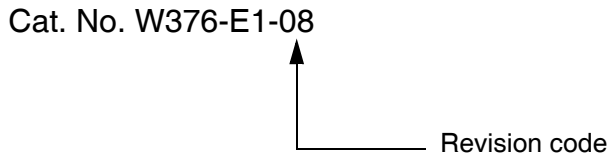

The following table outlines the changes made to the manual during each revision. Page numbers refer to the previous version.

Revision code	Date	Revised content
1	August 2000	Original production
02	March 2004	Additions and changes for upgrade to new version of Unit. “PC” was changed globally to “PLC” in the sense of Programmable Controller. “CS1 Series” was changed globally to “CS Series” or removed. **Page vi:** List of version upgrades added. **Pages 3 and 4:** “Available soon” removed. **Page 5:** Text changed at top left of figure. **Page 9:** “Acceleration/deceleration time designations” setting added toward bottom of table. **Page 11:** “This model” changed to specific model numbers. **Page 11:** Sentence for 2) under “Data saving” corrected. **Pages 13, 14:** Specific model numbers removed for Position Control Units. **Page 13:** Text changed to “CPU Unit.” **Pages 16 and 17:** Arrows added in figures. **Page 28:** Middle graphic changed. **Pages 58 and 67:** “Acceleration/deceleration time designations” setting added for words m+19, m+47, etc. **Page 63:** Reference changed to “Programming Manual.” **Pages 76 and 77:** *Acceleration/Deceleration Curve* section rewritten. **Pages 85, 85, 89, 91, and 82:** Note and references to it added. **Pages 99, 107, 168, 174, 193, 269, and 270:** Model number prefixes deleted. **Pages 114, 120, and 306:** “CS1” changed to “CPU Unit” for manual reference. **Page 124:** First line changed under 5-7. **Pages 136, 138, 150, 200, 209, and 211:** Terminal numbers for signals removed. **Page 161:** Information on new version of Unit added. **Pages 165, 173, 177, and 194:** Note added. **Page 188:** Information added to first paragraph. **Page 196:** Graphic changed. **Page 197:** “Set in the axis parameter area” removed. **Pages 198 and 199:** “Initial speed, Vo (pps)” corrected to “position sequence” data. **Pages 206 and 211,:** Information added following table. **Page 211:** “X-axis” added to “Interrupt feed” in figure. **Page 223:** Terminal numbers for signals removed and some of them replaced with text. **Pages 224 to 226:** ““X-axis” added to “Error counter” in figures and information in parentheses removed. **Page 232:** Section added on backup function. **Page 253:** DM Area addresses corrected. **Page 288:** Information added to table for code 0001. **Page 305:** “X-axis” added to “Emergency stop input signal” in figure and information in parentheses removed. **Page 319:** “0” changed or removed from first paragraph. **Page 320:** Numbers and figure corrected.

Revision code	Date	Revised content
03	January 2005	Additions, changes, and corrections were made throughout the manual, including the following revisions. **Pages xx, xxi, and xxii:** Precautions added and EC directives updated. **Pages 4 and 28:** Note added. **Page 57:** Model numbers corrected. **Pages 112, 116, 121, 174, 250, 255, 260, 264, 267, 272, and 275:** Information added to ladder diagram. **Pages 118 and 124:** New information on error code treatment added. **Pages 119 and 125:** Information in table changed and information in precautions changed. **Page 120:** Information added to table. **Pages 127, 129, and 316:** “W398” changed to “W433” for manual reference. **Pages 102, 162, 240, and 241:** “PC” changed to “CPU Unit” in diagram. **Pages 208, 281, 282, 283, and 284:** Information in ladder diagram changed. **Page 215:** Changed diagram and added information. **Pages 244 and 335:** Changed “CS1-series” to “CS-series” in table. **Pages 300 and 331:** Removed note. **Page 304:** Changed information in table.
04	December 2005	**Page v:** Added information on general precautions notation. **Pages vi to ix:** Updated unit version information for version 2.3. **Page xv:** Information on liability and warranty added. **Page xix:** Cautionary information added for pulse output. **Page 3:** Added information on function block programming. **Pages 46 to 53:** Changed “N.C contact” in diagrams to “N.O. contact”. **Page 55:** Added information on unused axes. **Page 66:** Added row to table for settings for unused axes. **Page 68:** Added column to table for unused axes. **Page 69:** Removed columns from table. Added information on settings for unused axes. **Page 72:** Changed “01 to 03” in table to “02 to 03”. Added information on CW/CCW pulse output direction selection. **Page 74:** Changed the enable timing. Added information on reverse mode 3. **Page 75:** Added information on origin search direction and origin search preset. **Page 88:** Changed description of present position preset. **Page 98:** Added section on examples of parameter settings. **Page 120:** Changed list of data and parameters for method 1. **Page 133:** Added information on origin search preset. **Pages 135 to 138:** Added information on reverse mode 3 and origin search preset. **Page 148:** Information on reverse mode 3 and origin search proximity speed added to figures. Removed figure for not using origin proximity input signal. **Page 165 and 166:** Added information on the Busy Flag, operation patterns, and multiple starts. **Page 174:** Added information on function block programming. **Pages 181:** Added information on reverse mode 3 and origin search preset. **Pages 298 and 299:** Added information on error results depending on the unit version. Updated error causes to include settings for unused axes. **Pages 307 and 308:** Removed “or exceeds the axis parameters’ maximum speed” from the error causes.
05	November 2006	**Page x**: Changed CX-Position information. **Page 62**: Added note on restrictions in Data Area section. **Pages 180 and 215**: Changed definition of acceleration/deceleration time and information how to calculate these times. **Page 341**: Changed definition of acceleration/deceleration time. **Pages 343 and 344**: Added description of deceleration time and the method of calculation.
06	February 2008	**Pages 57 and 58:** Added models to and removed model numbers in parentheses from table. **Page 301:** Changed first part of second and third paragraphs. **Pages 323 and 324:** Changed text in *Cause* column.
07	October 2010	**Page 44:** Added sentences just above the figure after the sentence starting “Connect the shielded cable to the frame ground.”
08	February 2022	Additions, changes, and corrections were made throughout the manual.

OMRON Corporation **Industrial Automation Company**
Kyoto, JAPAN

Contact: www.ia.omron.com

Regional Headquarters
OMRON EUROPE B.V.
Wegalaan 67-69, 2132 JD Hoofddorp
The Netherlands
Tel: (31)2356-81-300/Fax: (31)2356-81-388

OMRON ELECTRONICS LLC
2895 Greenspoint Parkway, Suite 200
Hoffman Estates, IL 60169 U.S.A.
Tel: (1) 847-843-7900/Fax: (1) 847-843-7787

OMRON ASIA PACIFIC PTE. LTD.
No. 438A Alexandra Road # 05-05/08 (Lobby 2),
Alexandra Technopark,
Singapore 119967
Tel: (65) 6835-3011/Fax: (65) 6835-2711

OMRON (CHINA) CO., LTD.
Room 2211, Bank of China Tower,
200 Yin Cheng Zhong Road,
PuDong New Area, Shanghai, 200120, China
Tel: (86) 21-5037-2222/Fax: (86) 21-5037-2200

Authorized Distributor:

© OMRON Corporation 2000-2022 All Rights Reserved.
In the interest of product improvement,
specifications are subject to change without notice.

Cat. No. W376-E1-08 0222