OMRON

FH-1050
FH-3050
FH-1050-□0
FH-3050-□0

生産終了
DISCONTINUED

Image Processing System

INSTRUCTION SHEET

Thank you for selecting OMRON product. This sheet primarily describes precautions required in installing and operating the product.
Before operating the product, read the sheet thoroughly to acquire sufficient knowledge of the product. For your convenience, keep the sheet at your disposal.

TRACEABILITY INFORMATION:
Importer in EU
Omron Europe B.V.
Wegalaan 67-69
2132 JD Hoofddorp,
The Netherlands

Manufacturer
Omron Corporation,
Shiokoji Horikawa, Shimogyo-ku,
Kyoto, 600-8530 JAPAN

The following notice applies only to products that carry the CE mark:
Notice:
This is a class A product. In residential areas it may cause radio interference, in which case the user may be required to take adequate measures to reduce interference.

9607479-9B

© OMRON Corporation 2013-2015 All Rights Reserved.

Meanings of Signal Words

●Symbols and the meanings for safety precautions described in this manual.
In order for the product to be used safely, the following indications are used in this book to draw your attention to the cautions. The cautions with the indications describe the important contents for safety.

⚠WARNING	Indicates a potentially hazardous situation which, if not avoided, will result in minor or moderate injury, or may result in serious injury or death. Additionally there may be significant property damage.
⚠CAUTION	Indicates a potentially hazardous situation which, if not avoided, may result in minor or moderate injury or in property damage.

Meanings of Alert Symbols

The following alert symbols are used in this manual.

⃠	Indicates general prohibitions for which there is no specific symbol.
⚠	Indicates the possibility of electric shock under specific conditions.
⚠	Indicates the possibility of explosion under specific conditions.
⚠	Indicates the possibility of laser radiation.
⚠	Indicates the possibility of injury by high temperature under specific conditions.

Alert statements in this Manual

The following alert statements apply to the products in this manual. Each alert statement also appears at the locations needed in this manual to attract your attention.

⚠WARNING

This product must be used according to the instruction manual. Failure to observe this may result in impairment of functions and performance of the product.	⚠
This product is not designed or rated for ensuring safety of persons. Do not use it for such purposes.	⃠
Never connect the AC power supply with this product. When the AC power supply is connected, it causes the electric shock and a fire.	⚠
A lithium battery is built into the Sensor Controller and may occasionally combust, explode, or burn if not treated properly. Dispose of the Sensor Controller as industrial waste, and never disassemble, apply pressure that would deform, heat to 100℃ or higher, or incinerate the Sensor Controller.	⚠
Since camera that can be connected with this product emits a visible light that may have an adverse effect on the eyes, do not stare directly into the light emitted from the LED. If a specular object is used, take care not to allow reflected light enter your eyes.	⚠
Do not touch the terminals while the power supply is ON. Doing so may result in electrical shock.	⚠
Please take external safety measures so that the system as a whole should be on the safe side even if a failure of a Sensor Controller or an error due to an external factor occurred.An abnormal operation may result in serious accident.	⚠
Please take fail-safe measures on your side in preparation for an abnormal signal due to signal conductor disconnection and/or momentary power interruption.An abnormal operation may result in a serious accident.	⚠

⚠CAUTION

Danger of burns. Do not touch the case while the LED is ON or just after power is turned OFF, since it remains extremely hot.	⚠

Precautions for Safe Use

●Installation Environment
- Do not use the product in areas where flammable or explosive gases are present.
- Install the product so that air can flow freely through its cooling vents.
- Clean the vent hole and discharge opening to prevent dust or particles from blocking them. Blocked cooling vents or discharge opening of the fan increasing heat inside, causing malfunction of the product.
- Do not install the product close to high-voltage devices and power devices in order to secure the safety of operation and maintenance.
- Make sure to tighten all installation screws securely.

●Power Supply and Wiring
- Make sure to use the product with the power supply voltage specified by this manual.
- Use the specified wire size (AWG10 to 16).
- Keep the power supply wires as short as possible (Max.2m).
- Use a DC power supply with safety measures against high-voltage spikes(safety extra low-voltage circuits on the secondary side).
- Do the following confirmations again before turning on the power supply.
  - Is the voltage and polarity of the power supply correct? (24VDC)
  - Is not the load of the output signal short-circuited?
  - Is the load current of the output signal appropriate?
  - Is not the mistake found in wiring?
  - Is the voltage and polarity of the encoder power(ENC0 VDD / ENC0 GND / ENC1 VDD / ENC1 GND) supply ? (5VDC)

●Ground
- The power supply circuit of the FH Sensor Controller is insulated from the internal circuit.
- Be sure to use a base to install the camera connected with the FH Sensor Controller. Since the exclosure of the camera main body made of metals is short-circuited with the internal circuit, the internal circuit might be short-circuited with FG if no base is used, so that failures or malfunctions may be caused.
- Perform Class D grounding (with a grounding resistance of 100Ω or less).
- Keep the ground line as short as possible by setting the grounding point as close as possible.
- Ground the FH Sensor Controller independently. If sharing the ground line with other devices or connecting it with a building beam, the Sensor Controller might be adversely effected.
- Check wiring again before turning on the FH Sensor Controller.
- Do not ground the plus (+) terminal of the 24VDC power source when the FH Sensor Controllers are connected to the FH-SC12/FH-SM12 (12 megapixels). Doing so may cause a short circuit of the internal circuit, resulting in a malfunction.
- Do not ground the plus (+) terminal of the 24VDC power source when the FH Sensor Controllers are connected to the FH-MT12 with a USB cable. Doing so may cause a short circuit of the internal circuit, resulting in a malfunction.

●Other
- Use only the camera and cables designed specifically for the product. Use of other products may result in malfunction or damage of the product.
- Please insert DVI-I connector perpendicularly so that the connector resin part and pin are not rubbing against each other. Damaged pin may cause contact failure due to generation and invasion of resin powder.
- Always turn OFF the power of the FH Sensor Controller and peripheral devices before connecting or disconnecting a camera or cable. Connecting the cable with power supplied may result in damage of the camera or peripheral devices.
- For the cable that is flexed repeatedly, use the robotic cable type (Bend resistant camera cable) to prevent damages.
- Do not apply torsion stress to the cable. It may damage the cable.
- Secure the minimum bending radius of the cable. Otherwise the cable may be damaged.
- Do not attempt to dismantle, repair, or modify the product.
- Should you notice any abnormalities, immediately stop use, turn OFF the power supply, and contact your OMRON representative.
- The FH Sensor Controller and camera case are hot while power is supplied or directly after the FH Sensor Controller is turned off. Do not touch the case.
- Be sure to dispose of the product as industrial waste.
- Do not drop, impose excessive vibration or shock on the product. Doing so may result in malfunction or burning.
- Since a lithium battery is incorporated, there is a rare case when you are seriously injured due to firing or blowout.
- Fail-safe measures, external to this system, should be in place to ensure safety when using Sensor Controller measurement results to control the movement of a robot and conveyor, or stage.

●Regulations of KC marking
A급 기기 (업무용 방송통신기자재)
이 기기는 업무용(A급) 전자파적합기기로서 판매자 또는 사용자는 이 점을 주의하시기 바라며,가정외의 지역에서 사용하는 것을 목적으로 합니다.

Precautions for Correct Use

●Installation and Storage Sites
Install and store the product in a location that meets the following conditions:
- Surrounding temperature of 0 to 50℃ (-20 to +65℃ in storage)
- No rapid changes in temperature (place where dew does not form)
- Relative humidity of between 35 to 85 %
- No presence of corrosive or flammable gases
- Place free of dust, salts and iron particles
- Place free of vibration and shock
- Place out of direct sunlight
- Place where it will not come into contact with water, oils or chemicals

●Orientation of Product
To keep proper ventilation, install the main unit only in the direction below so that the ventilation holes are not blocked.

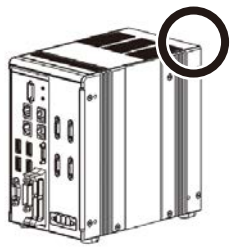

Do not install in this orientation.

●Ambient Temperature
- To keep proper air flow, keep the top of the FH Sensor Controller 50mm or more apart from other devices. Install the FH Sensor Controller with a clearance of 30mm on the right and left side, and 15mm for rear planes. The clearance is required for installing multiple units side-by-side.
  Clearance is not required for the side mounting.
- Do not install the product immediately above significant heat sources, such as heaters, transformers, or large-capacity resistors.
- Do not let the ambient temperature exceed 50℃(122°F).
- Provide a forced-air fan cooling or air conditioning if the ambient temperature is near 50℃(122°F) so that the ambient temperature never exceeds 50℃(122°F).

●Noise Resistance
- Do not install the product in a cabinet containing high-voltage equipment.
- Do not install the product within 200 mm of power cables.

●Component Installation and Handling
- Touching Signal Lines
  To prevent damage from static electricity, use a wrist strap or another device for preventing electrostatic discharges when touching terminals or signal lines in connectors.
- Handling a USB Memory/SD memory card
  To remove a USB memory or SD memory card, make sure that data is not being read or written to it.
- For USB memory, the LED flashes while data is being read or written, so make sure that it is lit steadily before removing the memory.
- For SD memory card, the SD BUSY LED flashes while data is being read or written, so make sure that it is turned OFF before removing the memory.
- When you insert the SD memory card, please do not insert in the reverse, do not insert at an angle and do not insert while twisting.
- Turning OFF the Power
  Do not turn OFF the power while a message is being displayed indicating that processing is being performed. Data in memory will be corrupted, and the product may not operate correctly the next time it is started.

●Maintenance
- Turn OFF the power and take safety precautions before conducting inspections. Electrical shock can result from attempting safety inspections with the power turned ON.
- Clean the lens with a lens-cleaning cloth or air brush.
- Lightly wipe off dirt with a soft cloth.
- Dirt on the image element must be removed using an air brush.
- Do not use thinners or benzene.

●Communication with High-order Device
After confirming that this product is started up, communicate with the high-order device. When this product has started up, an indefinite signal may be output from the high-order interface. To avoid this problem, clear the receiving buffer of your device at initial operations.

●Fail-Safe Measures
- If you wish to operate a stage and/or a robot using a measurement result from a FH Sensor Controller(e.g. axis movement amount output based on calibration/alignment measurement),always take safety measures so that the measurement result should be checked by the stage/robot if it is within the range of movement of the stage/robot before operation.
- On a FH Sensor Controller side,supplementarily use operations and branches of the FH Sensor Controller to configure a check flow such as “data should not be externally provided if the data is in a range from-XXXXX to XXXXX ”based on the stage/robot’s range of movement.

●In case of connecting the sensor controller and monitor with a switcher and splitter:
- Do not use devices that may require re-recognition of the monitor by the sensor controller. Re-recognizing the monitor during switch may slow the inspection speed down.

■Basic Configuration

* Items indicated with an asterisk are dedicated items, and cannot be substituted.

* Sensor controller

The Sensor Controller performs the image processing specified by the user settings and outputs the measurement results.

Camera 2ch type	Camera 4ch type	Camera 8ch type
FH-3050 FH-1050	FH-3050-10 FH-1050-10	FH-3050-20 FH-1050-20

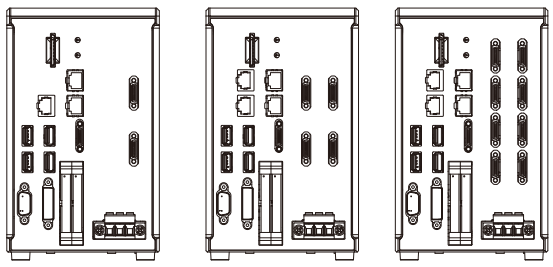

* Camera cable

Camera cable
FZ-VS3(2m,3m,5m,10m,min.bending radius: 69mm)
Bend resistant Camera cable
FZ-VSB3(2m,3m,5m,10m,min.bending radius: 69mm)
Right-angle Camera cable
FZ-VSL3(2m,3m,5m,10m,min.bending radius: 69mm)
Bend resistant Right-angle Camera cabe
FZ-VSLB3(2m,3m,5m,10m,min.bending radius: 69mm)
Long-distance Camera cable
FZ-VS4(15m,min.bending radius: 78mm)
Long-distance Right-angle Camera cable
FZ-VSL4(15m,min.bending radius: 78mm)

* Camera

Detects workpieces as images.

Standalone camera
FZ-SC/FZ-S/
FZ-SC2M/FZ-S2M/
FZ-SFC/FZ-SF/
FZ-SPC/FZ-SP/
FZ-SHC/FZ-SH/
FH-SC/FH-SM/
FH-SC02/FH-SM02/
FH-SC04/FH-SM04/
FZ-SC5M2/FZ-S5M2/
FH-SC12/FH-SM12

Intelligent compact camera
FZ-SQ010F/FZ-SQ050F/
FZ-SQ100F/FZ-SQ100N

* LCD monitor

Use the monitor to check images and display the condition-setting menus.

FZ-M08(8.4inch)

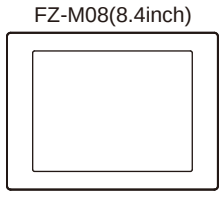

* Touch panel monitor

Use the monitor to check images and display the condition-setting menus.

FH-MT12（12.1inch）

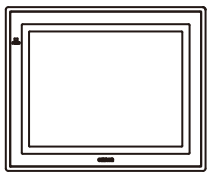

* Monitor cable

FFH-VMDA
(2m, 5m, 10m, min. bending radius 36mm)

* Monitor cable

FH-VMDA(2m,5m,10m, min. bending radius 36mm)

* Touch panel cable

FH-VUAB
（USB type, 2m, 5m, min. bending radius: 25mm）
XW2Z-□□□PP-1
（RS-232Ctype, 2m, 5m, 10m min. bending radius: 59mm）

Peripheral Device

* Switcher
In case of switching multiple of sensor controllers with a single monitor or touch panel monitor, please make sure to use an appropriate product.
Recommended model by OMRON: FZ-DU

* USB memory
FZ-MEM2G
FZ-MEM8G

* SD memory card
HMC-SD291
HMC-SD491

Power Supply

The power supply connected to FH Sensor Controller varies depending on the number of connected cameras and types for various consumption current types. Use is accordingly.

Recommended Model by OMRON:
S8VS series
S8VS-09024, S8VS-12024
S8VS-18024, S8VS-24024
S8VS-48024

Input Device

Mouse, keyboard
(Commercially available USB driverless wired devices)

■ Component Names and Functions

	LED name	Description
①	POWER LED	Lit while power is ON.
②	ERROR LED	Lit when an error has occurred.
③	RUN LED	Lit while the layout turned on output setting is displayed.
④	ACCESS LED	Blinks while the internal nonvolatile memory is accessed.
⑤	SD POWER LED	Lit while power is supplied to the SD memory card and the card is usable.
⑥	SD BUSY LED	Blinks while the SD memory card is accessed.
⑦	EtherCAT RUN LED	Lit while EtherCAT communications are usable.
⑧	EtherCAT LINK/ACT IN LED	Lit when connected with an EtherCAT device, and blinks while performing communications.
⑨	EtherCAT LINK/ACT OUT LED	Lit when connected with an EtherCAT device, and blinks while performing communications.
⑩	EtherCAT ERR LED	Lit when EtherCAT communications have become abnormal.
⑪	Ethernet NET RUN1 LED	Lit while Ethernet communications are usable.
⑫	Ethernet NET LINK/ACK1 LED	Lit when connected with an Ethernet device, and blinks while performing communications.
⑬	Ethernet NET RUN2 LED	Lit when Ethernet communications are usable.
⑭	Ethernet NET LINK/ACK2 LED	Lit when connected with an Ethernet device, and blinks while performing communications.

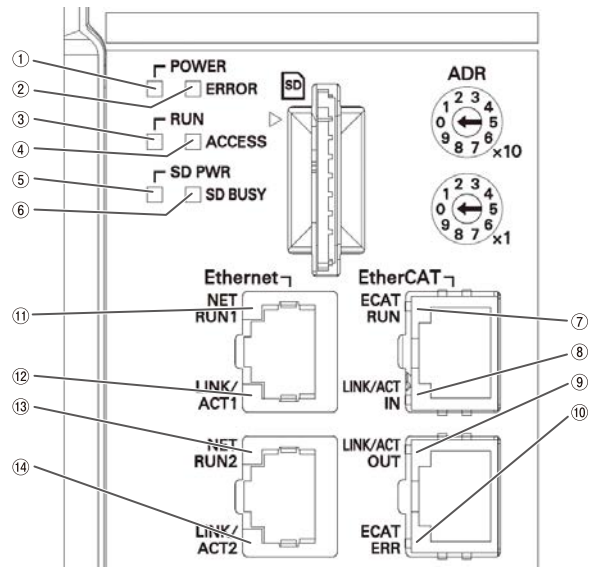

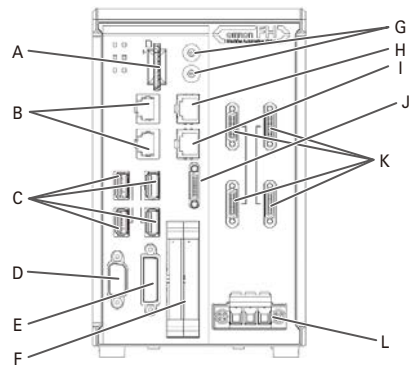

	Connector name	Description
A	SD memory card installation connector	Install the SD memory card. Do not plug or unplug the SD memory card during measurement operation. Otherwise measurement time may be affected or data may be destroyed.
B	Ethernet connector	Connect an Ethernet device. Camera 2ch type: Ethernet port and EtherNet/IP port are sharing use. Camera 4ch / 8ch type: Upper port : Ethernet port Lower port : Ethernet port and EtherNet/IP port are sharing use.
C	USB connector	Connect a USB device. Do not plug or unplug it during measurement and accessing USB device. Measurement time might be affected otherwise.
D	RS-232C connector	Connect an external device such as a PLC.
E	Monitor connector	Connect a monitor.
F	I/O(Parallel) connector(control lines, data lines)	Connect the controller to external devices such as a sync sensor and PLC.
G	EtherCAT address setup volume	Used to set a station address (00 to 99) as an EtherCAT communication device.
H	EtherCAT communication connector (IN)	Connect the opposed EtherCAT device.
I	EtherCAT communication connector (OUT)	Connect the opposed EtherCAT device.
J	Encoder connector	Connect an encoder.
K	Camera connector	Connect cameras.
L	Power supply terminal connector	Connect a DC power supply. Wire the FH Sensor Controller independently on other devices. Wire the ground line. Be sure to ground the FH Sensor Controller alone. Perform wiring using the attached terminal block connector (FH-XCN) as referring to the description of wiring that connector.

■Parallel Interface

Common use to all NPN/PNP models. Wire appropriately according to the specification of the external device.

●Internal Specification (for NPN Connection)

[Input] Applicable signals/
No.14 pin : Connect the COMIN1 terminal when using these signals.
No.37 to 46 pins：Connect the COMIN2 terminal when using these signals.

Input voltage	12-24VDC ±10%
ON current *1	Min. 5mA
ON voltage *1	Min. 8.8V
OFF current *2	Max. 0.5mA
OFF voltage *2	Max. 1.1V
ON delay	5ms or less
OFF delay	0.7ms or less
Internal circuit diagram	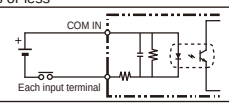

[Input] Applicable signals/
No.4 to 6, 9 to 11 pins : Connect the COMIN1 terminal when using these signals.
No.7, 8, 12, 13 pins : Connect the COMIN0 terminal when using these signals.

Input voltage	12-24VDC ±10%
ON current *1	Min. 5mA
ON voltage *1	Min. 8.8V
OFF current *2	Max. 0.5mA
OFF voltage *2	Max. 0.8V
ON delay	0.1ms or less
OFF delay	0.1ms or less
Internal circuit diagram	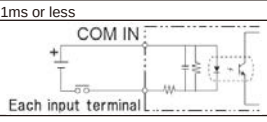

*1 ON current/voltage means the current or voltage value to activate the terminal. The ON voltage value is the potential difference between COM IN and each input terminal.
*2 OFF current/voltage means the current or voltage value to deactivate the terminal. The OFF voltage value is the potential difference between COM IN and each input terminal.

[Output] Applicable signals/
No.15 to 19 pin, No.28 to 32pin : Connect the COMOUT0 terminal when using these signals.
No.48 to 57 pins : Connect the COMOUT2 terminal when using these signals.
No.58 to 66 pins : Connect the COMOUT3 terminal when using these signals.

Output voltage	12-24VDC ±10%
Load current *	45mA or less
ON residual voltage	2V or less
OFF leakage current	0.2mA or less
Internal circuit diagram	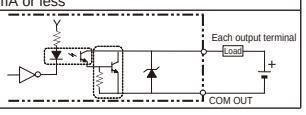

[Output] Applicable signals/
No.20 to 27 pins : Connect the COMOUT1 and COMIN0 terminals when using these signals.

Output voltage	12-24VDC ±10%
Load current *	45mA or less
ON residual voltage	2V or less
OFF leakage current	0.2mA or less
Internal circuit diagram	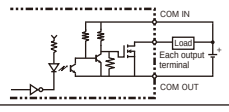

* The current value must be the specified load current or lower. Exceeding the specified current value may cause damage of the output circuit.

●Internal Specification (for PNP Connection)

[Input] Applicable signals/
No.14 pin : Connect the COMIN1 terminal when using these signals.
No.37 to 46 pint : Connect the COMIN2 terminal when using these signals.

Input voltage	12-24VDC ±10%
ON current *1	Min. 5mA
ON voltage *1	Min. 8.8V
OFF current *2	Max. 0.5mA
OFF voltage *2	Max. 1.1V
ON delay	5ms or less
OFF delay	0.7ms or less
Internal circuit diagram	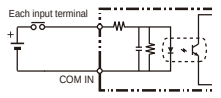

[Input] Applicable signals/
No.4 to 6, 9 to 11 pins : Connect the COMIN1 terminal when using these signals.
No.7, 8, 12, 13 pins : Connect the COMIN0 terminal when using these signals.

Input voltage	12-24VDC ±10%
ON current *1	Min. 5mA
ON voltage *1	Min. 8.8V
OFF current *2	Max. 0.5mA
OFF voltage *2	Max. 0.8V
ON delay	0.1ms or less
OFF delay	0.1ms or less
Internal circuit diagram	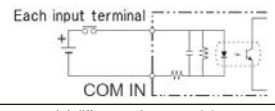

*1 ON current/voltage means the current or voltage value to activate the terminal. The ON voltage value is the potential difference between COM IN and each input terminal.
*2 OFF current/voltage means the current or voltage value to activate the terminal. The OFF voltage value is the potential difference between COM IN and each input terminal.

[Output] Applicable signals/
No.15 to 19 pin, No.28 to 32 pin : Connect the COMOUT0 terminal when using these signals.
No.48 to 57 pins : Connect the COMOUT2 terminal when using these signals.
No.58 to 66 pins : Connect the COMOUT3 terminal when using these signals.

Output voltage	12-24VDC ±10%
Load current *	45mA or less
ON residual voltage	2V or less
OFF leakage current	0.2mA or less
Internal circuit diagram	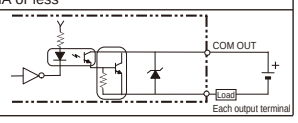

[Output] Applicable signals/
No.20 to 27 pins : Connect the COMOUT1 and COMIN0 terminals when using these signals.

Output voltage	12-24VDC ±10%
Load current *	45mA or less
ON residual voltage	2V or less
OFF leakage current	0.2mA or less
Internal circuit diagram	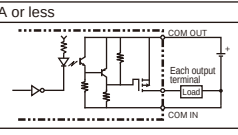

* The current value must be the specified load current or lower.Exceeding the specified current value may cause damage of the output circuit.

●I/O Connectors

The signal names and the role of terminals vary depending on the settings of the operation mode of the FH sensor controller. Check the settings and wire correctly.(About the operation mode, please refer to the Vision Sensor FH / FZ5 Series Vision System User's Manual.)

	No	I/O	XW2Z-S013-□ Wire color	XW2R-□34G-T Connector-Terminal Block Conversion Units, General-purpose devices	Signal name: In the 1-line mode	In the 2-line random mode	In the 3 to 4-line random mode	In the 5 to 8-line random mode	Remarks
CN1	1	—	Red	A1	COMIN0				
	2	—	Gray	B1	COMIN1				
	3	—	Gray	A2	Vacant				
	4	IN	Gray	B2	STEP0/ENCTRIG_Z0 (*1)	STEP0/ENCTRIG_Z0 (*2)	STEP0	STEP0	
	5	IN	Green	A3	Unused (*5)	STEP1/ENCTRIG_Z1 (*2)	STEP1	STEP1	
	6	IN	Gray	B3	Unused (*5)	Unused (*5)	STEP2	STEP2	
	7	IN	Gray	A4	Unused (*5)	Unused (*5)	STEP3	STEP3	
	8	IN	Gray	B4	ENCTRIG_A0 (*1)	ENCTRIG_A0 (*2)	Unused (*5)	Unused (*5)	
	9	IN	Gray	A5	Unused (*5)	Unused (*5)	Unused (*5)	STEP4	
	10	IN	Green	B5	Unused (*5)	Unused (*5)	Unused (*5)	STEP5	
	11	IN	Gray	A6	Unused (*5)	ENCTRIG_A1 (*2)	Unused (*5)	STEP6	
	12	IN	Gray	B6	Unused (*5)	ENCTRIG_B1 (*2)	Unused (*5)	STEP7	
	13	IN	Gray	A7	ENCTRIG_B0 (*1)	ENCTRIG_B0 (*2)	Unused (*5)	Unused (*5)	
	14	IN	Gray	B7	Unused (*5)	DILINE0			
	15	OUT	Green	A8	RUN0	RUN0	RUN0	READY0	
	16	OUT	Gray	B8	READY0	READY0	READY0	BUSY0	
	17	OUT	Gray	A9	BUSY0	BUSY0	BUSY0	OR0	
	18	OUT	Gray	B9	OR0	OR0	OR0	READY1	
	19	OUT	Gray	A10	ERROR0	ERROR0	ERROR0	BUSY1	
	20	OUT	Green	B10	STGOUT0 (*3)/SHTOUT0	STGOUT0 (*3)/SHTOUT0	STGOUT0 (*3)/SHTOUT0	STGOUT0 (*3)/SHTOUT0	
	21	OUT	Gray	A11	STGOUT1 (*3)	STGOUT1 (*3)/SHTOUT1	STGOUT1 (*3)/SHTOUT1	STGOUT1 (*3)/SHTOUT1	
	22	OUT	Gray	B11	STGOUT2 (*3)	STGOUT2 (*3)	STGOUT2 (*3)/SHTOUT2	STGOUT2 (*3)/SHTOUT2	
	23	OUT	Gray	A12	STGOUT3 (*3)	STGOUT3 (*3)	STGOUT3 (*3)/SHTOUT3	STGOUT3 (*3)/SHTOUT3	COMIN0 to 2：Common 0 to 2 for input signals
	24	OUT	Gray	B12	STGOUT4 (*3)	STGOUT4 (*3)	STGOUT4 (*3)	STGOUT4 (*3)/SHTOUT4	COMOUT0 to 3：Common 0 to 3 for output signals
	25	OUT	Green	A13	STGOUT5 (*3)	STGOUT5 (*3)	STGOUT5 (*3)	STGOUT5 (*3)/SHTOUT5	
	26	OUT	Gray	B13	STGOUT6 (*3)	STGOUT6 (*3)	STGOUT6 (*3)	STGOUT6 (*3)/SHTOUT6	DI0 to 7：Command inputs
	27	OUT	Gray	A14	STGOUT7 (*3)	STGOUT7 (*3)	STGOUT7 (*3)	STGOUT7 (*3)/SHTOUT7	DILINE0 to 2：Command inputs (line specified)
	28	OUT	Gray	B14	Unused (*5)	RUN1	RUN1	OR1	DSA0 to 1：Data transmission request
	29	OUT	Gray	A15	Unused (*5)	READY1	READY1	READY2	ENCTRIG_A0 to 1：Encoder trigger input (phase A)
	30	OUT	Green	B15	Unused (*5)	BUSY1	BUSY1	BUSY2	ENCTRIG_B0 to 1：Encoder trigger input (phaseB)
	31	OUT	Gray	A16	Unused (*5)	OR1	OR1	OR2	ENCTRIG_Z0 to 1：Encoder trigger input (phase Z)
	32	OUT	Gray	B16	Unused (*5)	ERROR1	ERROR1	READY3	STEP0 to 7：Measurement trigger input
	33	—	Gray	A17	COMOUT0				
	34	—	Gray	B17	COMOUT1				ACK：Instruction execution completion flag
CN2	35	—	Red	A1	COMIN2				BUSY0 to 7：ON during processing
	36	—	Gray	B1	Vacant				DO0 to 15：Data output
	37	IN	Gray	A2	DSA0	DSA0	DILINE1	DILINE1	ERROR：ON when an error occurs (*4)
	38	IN	Gray	B2	Unused (*5)	DSA1	Unused (*5)	DILINE2	ERROR0 to 3：ON when an error occurs
	39	IN	Green	A3	DI0				GATE0 to 1：ON during configured output time
	40	IN	Gray	B3	DI1				OR0 to 7：Overall judgement result
	41	IN	Gray	A4	DI2				READY0 to 7：ON when image input is allowed
	42	IN	Gray	B4	DI3				RUN0 to 3：ON while the layout turned on output setting is displayed
	43	IN	Gray	A5	DI4				
	44	IN	Green	B5	DI5				SHTOUT0 to 7：Shutter output
	45	IN	Gray	A6	DI6				STGOUT0 to 7：Strobe trigger output(*3)
	46	IN	Gray	B6	DI7				
	47	—	Gray	A7	Vacant				
	48	OUT	Gray	B7	ACK				
	49	OUT	Green	A8	GATE0	GATE0	RUN2	BUSY3	
	50	OUT	Gray	B8	Unused (*5)	GATE1	READY2	OR3	
	51	OUT	Gray	A9	DO0	DO0	BUSY2	READY4	
	52	OUT	Gray	B9	DO1	DO1	OR2	BUSY4	
	53	OUT	Gray	A10	DO2	DO2	ERROR2	OR4	
	54	OUT	Green	B10	DO3	DO3	RUN3	READY5	
	55	OUT	Gray	A11	DO4	DO4	READY3	BUSY5	
	56	OUT	Gray	B11	DO5	DO5	BUSY3	OR5	
	57	OUT	Gray	A12	DO6	DO6	OR3	READY6	
	58	OUT	Gray	B12	DO7	DO7	ERROR3	BUSY6	
	59	OUT	Green	A13	DO8	DO8	Unused (*5)	OR6	
	60	OUT	Gray	B13	DO9	DO9	Unused (*5)	READY7	
	61	OUT	Gray	A14	DO10	DO10	Unused (*5)	BUSY7	
	62	OUT	Gray	B14	DO11	DO11	Unused (*5)	OR7	
	63	OUT	Gray	A15	DO12	DO12	Unused (*5)	Unused (*5)	
	64	OUT	Green	B15	DO13	DO13	Unused (*5)	Unused (*5)	
	65	OUT	Gray	A16	DO14	DO14	Unused (*5)	Unused (*5)	
	66	OUT	Gray	B16	DO15	DO15	Unused (*5)	ERROR (*4)	
	67	—	Gray	A17	COMOUT2				
	68	—	Gray	B17	COMOUT3				

*1 To use a measurement trigger input, use the STEP signal. To use an encoder input, use ENCTRIG_A0/B0/Z0.
*2 In the 2-line random mode, to use a measurement trigger input and a line of encoder input, use ENCTRIG_A0/B0/Z0 and STEP1.
*3 This is the signal used when using a strobe signal for the FH Sensor Controller.
*4 This is the ERROR signal commonly used in 1 to 8-line modes.
*5 Do not connect anything for Unused.

●Connection

Connect the parallel I/O cable with more than the minimum bending radius.

● Pin Assignment

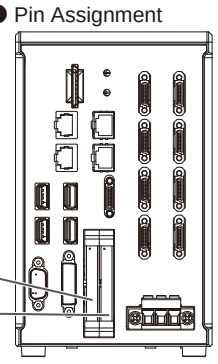

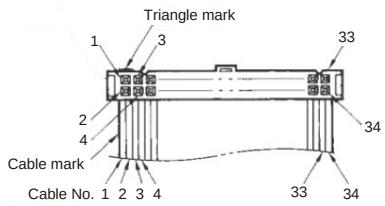

Use another parallel I/O cable for No.35 to 68.

Name	Model	Descriptions	Remarks
Parallel I/O Cable	XW2Z-S013-□	FH Sensor Controllers only Cable length: 2 m or 5 m Min bending radius: 10mm	・2 Cables are required for all I/O signals. ・This cable is the type of one side flat cable and another side connector. ・Connect the parallel I/O cable with more than the minimum bending radius. ・Insert the cables length into □ in the model number as follows. 2=2m、5=5m
Parallel I/O Cable for Connector-terminal Conversion Unit	XW2Z-□□□EE	FH Sensor Controllers only Cable length: 0.5m,1m,1.5m, 2 m, 3m, 5m Min bending radius: 83.2mm	・2 Cables are required for all I/O signals. ・Connect the parallel I/O cable with more than the minimum bending radius. ・Insert the cables length into □ in the model number as follows. 050=0.5m, 100=1m, 150=1.5m, 200=2m, 300=3m, 500=5m ・Connector-Terminal Block Conversion Units can be connected (Terminal Blocks Recommended Products: OMRON XW2R-□34G-T)
Connector-Terminal Block Conversion Units, General-purpose devices	XW2R-□34G-T		・Insert the wiring method into @ in the model number as follows. Phillips screw = J, Slotted screw (rise up) = E, Push-in spring = P Refer to the XW2R Series catalog (Cat. No. G077) for details.

■Encoder Interface (Line Driver Type)

●Specification of Encoder Interface (Line Driver Output Type)

Item	Specifications
Input voltage	Input voltage：5VDC±5% Signal level：EIA Standard, RS-422-A line driver level
Input impedance *1	120Ω±5%
Differential input voltage	High-level input voltage | 0.1V, Low-level input voltage | -0.1V
Hysteresis voltage	60mV
Maximum response frequency *2	Phase A/B/Z: 1MHz (When using an I/O cable, model FH-VR 1.5M)

*1 Value when the terminal resistance function is used.
*2 Use this interface as paying attention to the cable length and response frequency of the encoder used.

●I/O Connector

No	Signal name	Color	Remarks
1	ENC0 A+	Black	Signal : Ch1 A-Phase(+)
2	ENC0 A-	Black /Red	Signal : Ch1 A-Phase(-)
3	ENC0 VDD	Brown	Power : Power supply for Ch1 (5VDC)
4	ENC0 B+	White	Signal : Ch1 B-Phase(+)
5	ENC0 B-	White/Red	Signal : Ch1 B-Phase(-)
6	ENC0 GND	Blue	Power : Signal ground for Ch1 (0V)
7	ENC0 Z+	Orange	Signal : Ch1 Z-Phase(+)
8	ENC0 Z-	Orange/Red	Signal : Ch1 Z-Phase(-)
9	NC	—	Not connected
10	ENC1 A+	Purple	Signal : Ch2 A-Phase(+)
11	ENC1 A-	Purple/Red	Signal : Ch2 A-Phase(-)
12	ENC1 VDD	Brown/Red	Power : Power supply for Ch2 (5VDC)
13	ENC1 B+	Pink	Signal : Ch2 B-Phase(+)
14	ENC1 B-	Pink/Red	Signal : Ch2 B-Phase(-)
15	ENC1 GND	Blue/Red	Power : Signal ground for Ch2 (0V)
16	ENC1 Z+	Yellow	Signal : Ch2 Z-Phase(+)
17	ENC1 Z-	Yellow/Red	Signal : Ch2 Z-Phase(-)

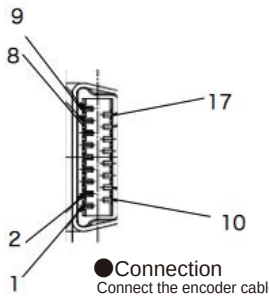

●Connection

Connect the encoder cable with more than the minimum bending radius.
FH-VR 1.5M (1.5m, minimum bending radius: 65mm, sold separately)

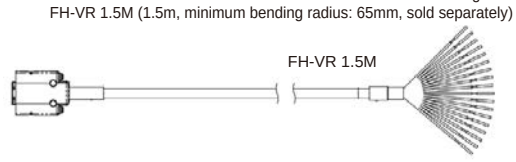

●Circuit Schematics

Line driver input type

CH1

Line driver input type

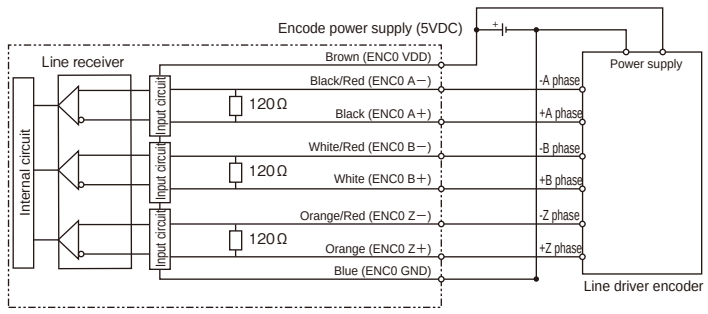

Line driver input type

CH2

Line driver input type

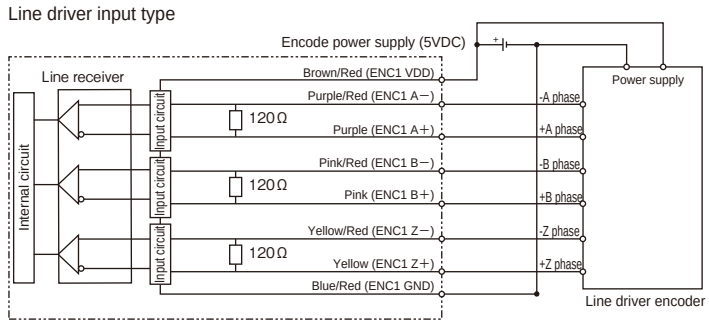

■Camera cable

The maximum cable length depends on the Camera being connected,and the model and length of the Cable being used.
For further information,please refer to the “Cameras/Cables Connection Table”.
Be sure to secure at least the minimum bending radius of the cable.

●Cameras/Cables Connection Table(Connecting to FH-S Series Camera)

Type of camera	Model	Cable length	High-speed CMOS cameras *						
			300,000-pixel	2 million-pixel		4 million-pixel		12 million-pixel	
			FH-SM/SC	FH-SM02/SC02		FH-SM04/SC04		FH-SM12/SC12	
			—	High speed mode of transmission speed select	Standard mode of transmission speed select	High speed mode of transmission speed select	Standard mode of transmission speed select	High speed mode of transmission speed select	Standard mode of transmission speed select
Camera Cable Right-angle camera cable	FZ-VS3 FZ-VSL3	2m	Yes	Yes	Yes	Yes	Yes	Yes	Yes
		3m	Yes	Yes	Yes	Yes	Yes	Yes	Yes
		5m	Yes	Yes	Yes	Yes	Yes	Yes	Yes
		10m	Yes	No	Yes	No	Yes	No	Yes
Bend resistant camera cable Bend resistant right-angle camera cable	FZ-VSB3 FZ-VSLB3	2m	Yes	Yes	Yes	Yes	Yes	Yes	Yes
		3m	Yes	Yes	Yes	Yes	Yes	Yes	Yes
		5m	Yes	Yes	Yes	Yes	Yes	Yes	Yes
		10m	Yes	No	Yes	No	Yes	No	Yes
Long-distance camera cable Long-distance right-angle camera cable	FZ-VS4 FZ-VSL4	15m	Yes	No	Yes	No	Yes	No	Yes

＊High-speed CMOS camera is only for the FH series.

●Cameras/Cables Connection Table(Connecting to FZ-S Series Camera)

Type of camera	Model	Cable length	Digital CCD cameras			Small digital CCD cameras Pen type/flat type	High-speed CCD camera	Intelligent compact CMOS cameras
			300,000-pixel	2 million-pixel	5 million-pixel			
			FZ-S/SC	FZ-S2M/SC2M	FZ-S5M2/ SC5M2	FZ-SF/SFC FZ-SP/SPC	FZ-SH/SHC	FZ-SQ□
Camera Cable Right-angle camera cable	FZ-VS3 FZ-VSL3	2m	Yes	Yes	Yes	Yes	Yes	Yes
		3m	Yes	Yes	Yes	Yes	Yes	Yes
		5m	Yes	Yes	Yes	Yes	Yes	Yes
		10m	Yes	Yes	No	Yes	Yes	Yes
Bend resistant camera cable Bend resistant right-angle camera cable	FZ-VSB3 FZ-VSLB3	2m	Yes	Yes	Yes	Yes	Yes	Yes
		3m	Yes	Yes	Yes	Yes	Yes	Yes
		5m	Yes	Yes	Yes	Yes	Yes	Yes
		10m	Yes	Yes	No	Yes	Yes	Yes
Long-distance camera cable Long-distance right-angle camera cable	FZ-VS4 FZ-VSL4	15m	Yes	Yes	No	Yes	Yes	Yes

●Mounting of Ferrite core

Mount the ferrite core attached to the camera cable to near the Sensor Controller.

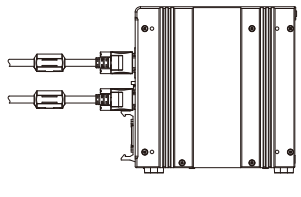

■EtherCAT Interface

●Cable Connect a straight LAN cable.
Use an STP cable of category 5e or higher, which is shielded double with an aluminum tape and a braided cord.

●I/O Connector Use an 8-pin shielded RJ45 modular connecter of category 5e or higher.

・Pin assignment

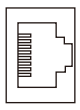

Pin No.	Signal name	Abbreviation	Signal direction
1	Transmission data +	TD＋	Out
2	Transmission data -	TD－	Out
3	Reception data +	RD＋	In
4	Not connected	NC	－
5	Not connected	NC	－
6	Reception data -	RD－	In
7	Not connected	NC	－
8	Not connected	NC	－
Connector hood	Security ground	FG	－

●Wiring

The cable is maximum 100m long.
However, some cables do not guarantee 100m. If conductor is a twisted cable, transmission performance generally becomes worse than that of straight cables, so that 100m cannot be guaranteed. For details, contact the cable manufacturer.

Pin No.	Wire color
1	White・Green
2	Green
3	White・Orange
4	Blue
5	White・Blue
6	Orange
7	White・Brown
8	Brown
Connector hood	Shielded cable

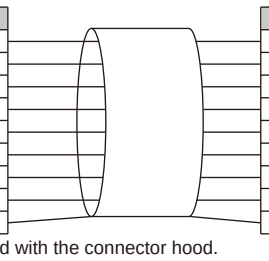

Wire color	Pin No.
White・Green	1
Green	2
White・Orange	3
Blue	4
White・Blue	5
Orange	6
White・Brown	7
Brown	8
Shielded cable	Connector hood

* Connect both ends of the cable shield with the connector hood.
* Use the T568A wiring method as mentioned above.

■RS-232C(Serial) Interface

●I/O Connector

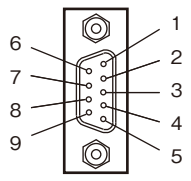

Pin No.	Signal name	Function
1	NC	Not connected
2	RD	Data reception
3	SD	Data transmission
4	NC	Not connected
5	SG	Signal ground
6	NC	Not connected
7	NC	Not connected
8	NC	Not connected
9	NC	Not connected

●Wiring

The maximum cable length is 15m.

FH Sensor Controller	
Signal name	Pin No.
RD	2
SD	3
SG	5

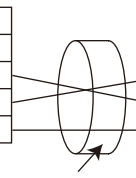

External device to be connected	
Pin No.	Signal name
*	RD
*	SD
*	SG

RS/CS control cannot be used.

Use a shielded cable.

Use a compatible connector.

・Recommended items

	Manufacturer	Model
Sockets	OMRON Corporation	XM3D-0921
Hood	OMRON Corporation	XM2S-0911

CHECK! Pin numbers will depend on the external device being connected. Refer to the manual for the personal computer or PLC being connected.

●Connection Method

Align the connector with the socket and press it straight into place, then fix it with the screws on both sides of the connector.

CHECK! Turn OFF the power supply before connecting or disconnecting a Parallel I/O Cable.
Peripheral devices may be damaged if the cable is connected or disconnected with the power ON.

■Wiring

[Important] - Use the specified wire size (AWG10 to 16).
Keep the power supply wires as short as possible (Max.2m).
Wiring cables incorrectly might cause failures.

●Connection of Terminal Block

1 Insert the end of the signal line (electric wire) into the attached terminal block connector (male), and tighten the three screws on the connector top to fix the wire.
Recommended tightening torque: 0.7-0.8N·m

2 Insert the terminal block connector (male) into the terminal block connector (female) on the FH Sensor Controller side.

3 Fix the terminal block connector (male) by tightening the screws on the right and left sides of it with a flathead screwdriver.
Recommended tightening torque: 0.7-0.8N·m
Terminal block connector(male):FH-XCN (OMRON)

Pin No.	Display	Function
1	＋	Input power supply voltage (24VDC).
2	－	Input power supply voltage (0V).
3	⏚	Connect to the earth

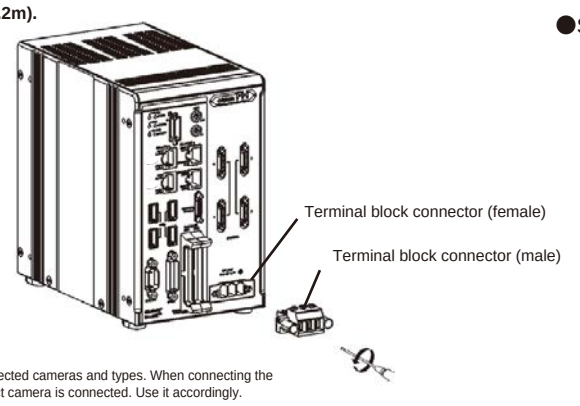

The power supply connected to the FH Sensor Controller varies depending on the number of connected cameras and types. When connecting the lighting with lighting controller, the consumption current is the same as when the intelligent compact camera is connected. Use it accordingly.

Recommended power supply

Item	Camera type	No. of cameras connected	High-speed controller			Standard controller		
			FH-3050	FH-3050-10	FH-3050-20	FH-1050	FH-1050-10	FH-1050-20
Recommended power supply: S8VS	Intelligent compact camera	2	S8VS-12024	S8VS-18024	S8VS-18024	S8VS-12024	S8VS-12024	S8VS-18024
		4	-	S8VS-18024	S8VS-24024	-	S8VS-18024	S8VS-24024
		8	-	-	S8VS-48024	-	-	S8VS-48024
	Camera of 0.3/2/4/5/12 million pixels	2	S8VS-12024	S8VS-18024	S8VS-18024	S8VS-09024	S8VS-09024	S8VS-12024
		4	-	S8VS-18024	S8VS-18024	-	S8VS-12024	S8VS-12024
		8	-	-	S8VS-18024	-	-	S8VS-18024

■Ratings/Characteristics

Type				High-speed controller			Standard controller		
Model			NPN / PNP	FH-3050	FH-3050-10	FH-3050-20	FH-1050	FH-1050-10	FH-1050-20
Major functions	Controller type			BOX type					
	Number of cameras			2	4	8	2	4	8
	Type of connected camera			All cameras can be connected (FZ-S/FH-S series)					
	Number of scenes			128					
	Operation			Mouse or similar device					
	Settings			Create processing flows by editing them.					
External interface	Serial communications			RS-232C 1 CH					
	Ethernet communications			Non-procedural (TCP/UDP) 1000BASE-T					
				1port	2port	2port	1port	2port	2port
	EtherNet/IP communications			1 port (Ethernet port and EtherNet/IP port are sharing use.) Transmission speed : 100Mbps (100BASE-TX)					
	EtherCAT communications			EtherCAT dedicated protocol (100BASE-TX)					
	Parallel I/O			In 1-line mode : 12 inputs, 31 outputs. In the 2-line random trigger mode : 17 inputs, 37 outputs. In the 3 to 4-line random trigger mode : 14 inputs, 29 outputs. In the 5 to 8-line random trigger mode : 19inputs, 34 outputs.					
	Encoder I/F			Input voltage: 5VDC±5%, RS422-A line driver level, Phase A/B/Z: 1MHz					
	Monitor I/F			DVI-I(Single Link) output 1ch					
	USBI/F			4 ch(supports USB1.1 and 2.0)					
	SD memory card I/F			SDHC standard					
Ratings	Power supply voltage			20.4 to 26.4VDC					
	Current consumption *	When an intelligent compact camera is connected*	2 connected	5.0A or less	5.4A or less	6.4A or less	4.7A or less	5.0A or less	5.9A or less
			4 connected	—	7.0A or less	8.1A or less	—	6.5A or less	7.5A or less
			8 connected	—	—	11.5A or less	—	—	10.9A or less
		When a Camera of 0.3/2/4/5/12 million pixels is connected	2 connected	4.1A or less	4.2A or less	5.2A or less	3.6A or less	3.7A or less	4.5A or less
			4 connected	—	4.8A or less	5.6A or less	—	4.3A or less	5.0A or less
			8 connected	—	—	6.8A or less	—	—	6.2A or less
	Insulation resistance			Between DC power supply and FH Sensor Controller FG: 20MΩ or higher (rated voltage 250V)					
Operating environment	Noise resistance	Fast transient burst	DC power	Direct infusion: 2kV Pulse rising: 5ns Pulse width: 50ns Burst continuation time: 15ms/0.75ms Period: 300ms Application time: 1 min					
			I/O line	Cramp : 1kV Pulse rising: 5ns Pulse width: 50ns Burst continuation time: 15ms/0.75ms Period: 300ms Application time: 1 min					
	Ambient temperature range			Operating: 0 to 50 °C Storage: –20 to +65 °C (with no icing nor no condensation)					
	Ambient humidity range			Operating and storage: 35 % to 85 % (no condensation)					
	Ambient environment			No corrosive gases					
	Grounding			Type D grounding (100Ω or less grounding resistance) *Conventional type 3 grounding					
	Degree of protection			IEC60529 IP20					
	Environmental conditions			Indoor use Maximum altitude of 2,000m Supply voltage fluctuations of +10%, -15% of the rated voltage Installation category I Pollution degree 2					
Dimensions	Dimensions			190mm(H)×115mm(W)×182.5mm(D)					
	Weight			Approx.3.2kg	Approx.3.4kg	Approx.3.4kg	Approx.3.2kg	Approx.3.4kg	Approx.3.4kg
	Case materials			Cover: zinc-plated steel plate, Side plate: aluminum (A6063)					
Content				FH Sensor Controller (1) / Instruction Sheet (one Japanese and one English version) / Instruction Installation Manual (1) / Terminal block connector: FH-XCN (1) / Ferrite core 2(FH3050 and FH-1050), 4 (FH-3050-10 and FH-1050-10), and 8 (FH-3050-20 and FH-1050-20)					

* The value of power consumption applies when the maximum number of cameras of each FH Sensor Controller is connected with 24VDC. When connecting the lighting with lighting controller, the consumption current is the same as when the intelligent compact camera is connected.

■Dimensions

(Unit: mm)

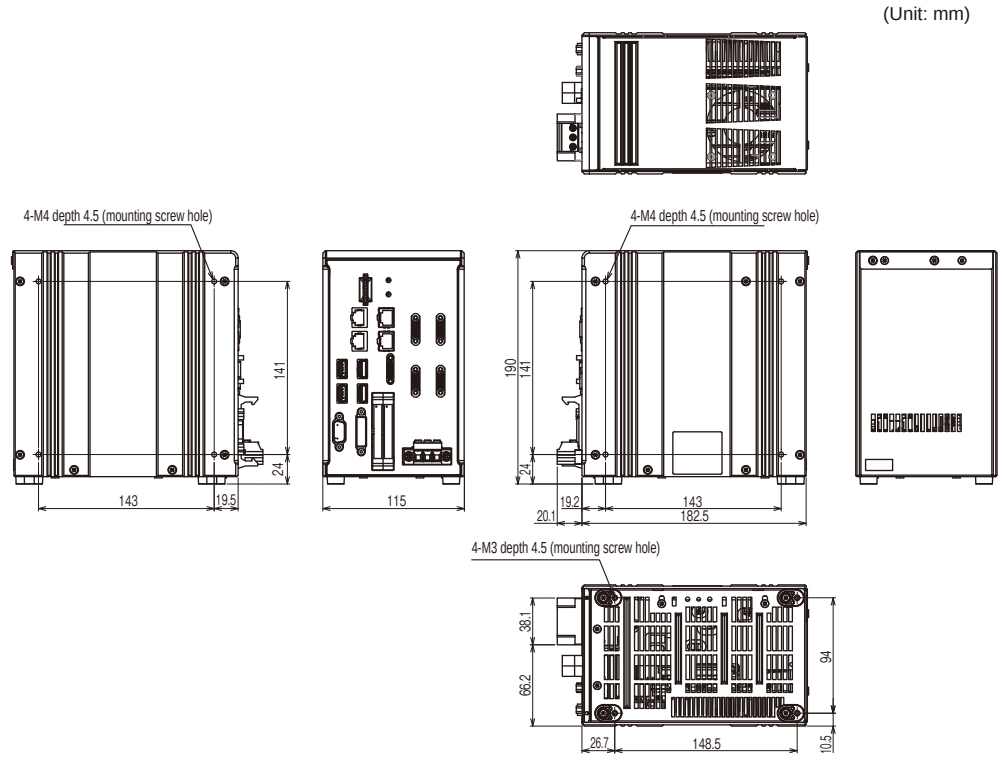

・Camara cable mounting

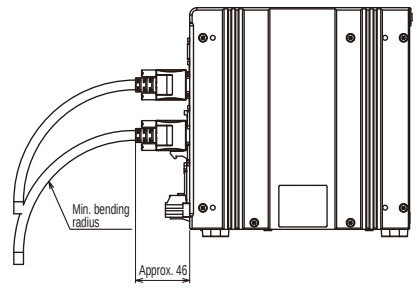

■Mounting

- Tighten the screws securely when installing the product.
- To keep proper air flow, keep the top of the FH Sensor Controller 50mm or more apart from other devices. Install the FH Sensor Controller with a clearance of 30mm on the right and left side, and 15mm for rear planes. The clearance is required for installing multiple units side-by-side.Clearance is not required for the side mounting.
- Do not install the product immediately above significant heat sources, such as heaters, transformers, or large-capacity resistors.
- Do not install the product in a cabinet containing high-voltage equipment.
- Do not install the product within 200 mm of power cables.

●Side Mounting

(Unit: mm)

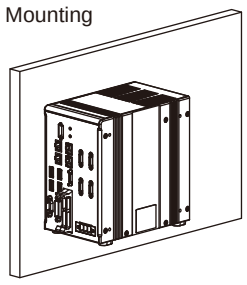

・Left side

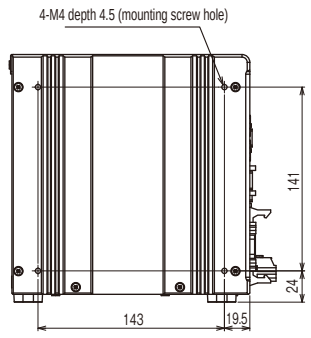

・Right side

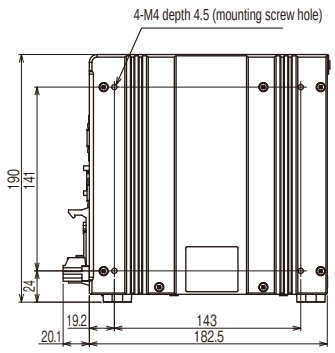

* Recommended tightening torque: 1.2N·m to 1.3N·m
* The tolerance: ± 0.2mm.

●Bottom Mounting

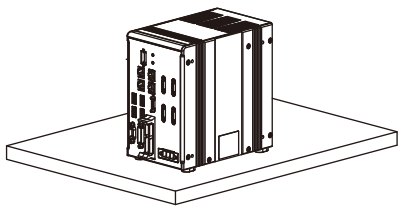

・Bottom

(Unit: mm)

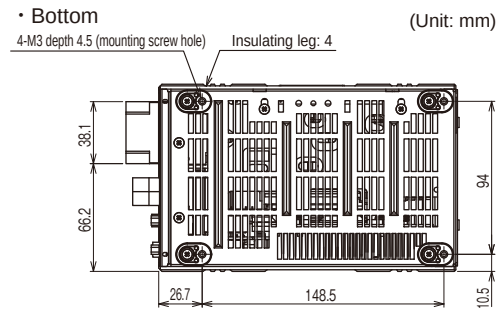

* Do not remove the Insulating leg. Fix the Insulating leg to secure the ventilation path.
* Recommended tightening torque: 0.54N·m to 0.6N·m
* The tolerance: ± 0.2mm.

■U.S. California Notice:

This product contains a lithium battery for which the following notice applies :Perchlorate Material - special handling may apply.
See www.dtsc.ca.gov/hazardouswaste/perchlorate

Suitability for Use

Omron Companies shall not be responsible for conformity with any standards, codes or regulations which apply to the combination of the Product in the Buyer's application or use of the Product. At Buyer's request, Omron will provide applicable third party certification documents identifying ratings and limitations of use which apply to the Product. This information by itself is not sufficient for a complete determination of the suitability of the Product in combination with the end product, machine, system, or other application or use. Buyer shall be solely responsible for determining appropriateness of the particular Product with respect to Buyer's application, product or system. Buyer shall take application responsibility in all cases.

NEVER USE THE PRODUCT FOR AN APPLICATION INVOLVING SERIOUS RISK TO LIFE OR PROPERTY WITHOUT ENSURING THAT THE SYSTEM AS A WHOLE HAS BEEN DESIGNED TO ADDRESS THE RISKS, AND THAT THE OMRON PRODUCT(S) IS PROPERLY RATED AND INSTALLED FOR THE INTENDED USE WITHIN THE OVERALL EQUIPMENT OR SYSTEM.

OMRON

OMRON Corporation
Industrial Automation Company
Tokyo, JAPAN
Contact: www.ia.omron.com

Regional Headquarters
OMRON EUROPE B.V.
Wegalaan 67-69,2132 JD
Hoofddorp The Netherlands
Tel: (31)2356-81-300
Fax: (31)2356-81-388

OMRON ELECTRONICS LLC
2895 Greenspoint Parkway, Suite 200
Hoffman Estates, IL 60169 U.S.A
Tel: (1)847-843-7900
Fax: (1)847-843-7787

OMRON ASIA PACIFIC PTE. LTD.
No. 438A Alexandra Road
#05-05/08 (Lobby 2), Alexandra
Technopark, Singapore 119967
Tel: (65)6835-3011
Fax: (65)6835-2711

OMRON (CHINA) CO.,LTD.
Room 2211, Bank of China Tower,
200 Yin Cheng Zhong Road,
PuDong New Area, Shanghai,
200120, China
Tel: (86)21-5037-2222
Fax: (86)21-5037-2200

Note: Specifications subject to change without notice.