生産終了
DISCONTINUED

C200H-CT021
High-speed Counter Unit

Operation Manual

Revised December 2000

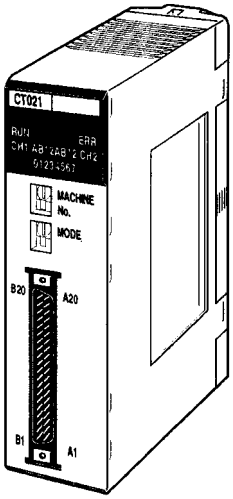

Read and Understand this Manual

Please read and understand this manual before using the product. Please consult your OMRON representative if you have any questions or comments.

Warranty and Limitations of Liability

WARRANTY

OMRON's exclusive warranty is that the products are free from defects in materials and workmanship for a period of one year (or other period if specified) from date of sale by OMRON.

OMRON MAKES NO WARRANTY OR REPRESENTATION, EXPRESS OR IMPLIED, REGARDING NON-INFRINGEMENT, MERCHANTABILITY, OR FITNESS FOR PARTICULAR PURPOSE OF THE PRODUCTS. ANY BUYER OR USER ACKNOWLEDGES THAT THE BUYER OR USER ALONE HAS DETERMINED THAT THE PRODUCTS WILL SUITABLY MEET THE REQUIREMENTS OF THEIR INTENDED USE. OMRON DISCLAIMS ALL OTHER WARRANTIES, EXPRESS OR IMPLIED.

LIMITATIONS OF LIABILITY

OMRON SHALL NOT BE RESPONSIBLE FOR SPECIAL, INDIRECT, OR CONSEQUENTIAL DAMAGES, LOSS OF PROFITS OR COMMERCIAL LOSS IN ANY WAY CONNECTED WITH THE PRODUCTS, WHETHER SUCH CLAIM IS BASED ON CONTRACT, WARRANTY, NEGLIGENCE, OR STRICT LIABILITY.

In no event shall the responsibility of OMRON for any act exceed the individual price of the product on which liability is asserted.

IN NO EVENT SHALL OMRON BE RESPONSIBLE FOR WARRANTY, REPAIR, OR OTHER CLAIMS REGARDING THE PRODUCTS UNLESS OMRON'S ANALYSIS CONFIRMS THAT THE PRODUCTS WERE PROPERLY HANDLED, STORED, INSTALLED, AND MAINTAINED AND NOT SUBJECT TO CONTAMINATION, ABUSE, MISUSE, OR INAPPROPRIATE MODIFICATION OR REPAIR.

Application Considerations

SUITABILITY FOR USE

OMRON shall not be responsible for conformity with any standards, codes, or regulations that apply to the combination of products in the customer's application or use of the products.

At the customer's request, OMRON will provide applicable third party certification documents identifying ratings and limitations of use that apply to the products. This information by itself is not sufficient for a complete determination of the suitability of the products in combination with the end product, machine, system, or other application or use.

The following are some examples of applications for which particular attention must be given. This is not intended to be an exhaustive list of all possible uses of the products, nor is it intended to imply that the uses listed may be suitable for the products:

- Outdoor use, uses involving potential chemical contamination or electrical interference, or conditions or uses not described in this manual.
- Nuclear energy control systems, combustion systems, railroad systems, aviation systems, medical equipment, amusement machines, vehicles, safety equipment, and installations subject to separate industry or government regulations.
- Systems, machines, and equipment that could present a risk to life or property.

Please know and observe all prohibitions of use applicable to the products.

NEVER USE THE PRODUCTS FOR AN APPLICATION INVOLVING SERIOUS RISK TO LIFE OR PROPERTY WITHOUT ENSURING THAT THE SYSTEM AS A WHOLE HAS BEEN DESIGNED TO ADDRESS THE RISKS, AND THAT THE OMRON PRODUCTS ARE PROPERLY RATED AND INSTALLED FOR THE INTENDED USE WITHIN THE OVERALL EQUIPMENT OR SYSTEM.

PROGRAMMABLE PRODUCTS

OMRON shall not be responsible for the user's programming of a programmable product, or any consequence thereof.

Disclaimers

CHANGE IN SPECIFICATIONS

Product specifications and accessories may be changed at any time based on improvements and other reasons.

It is our practice to change model numbers when published ratings or features are changed, or when significant construction changes are made. However, some specifications of the products may be changed without any notice. When in doubt, special model numbers may be assigned to fix or establish key specifications for your application on your request. Please consult with your OMRON representative at any time to confirm actual specifications of purchased products.

DIMENSIONS AND WEIGHTS

Dimensions and weights are nominal and are not to be used for manufacturing purposes, even when tolerances are shown.

PERFORMANCE DATA

Performance data given in this manual is provided as a guide for the user in determining suitability and does not constitute a warranty. It may represent the result of OMRON's test conditions, and the users must correlate it to actual application requirements. Actual performance is subject to the OMRON Warranty and Limitations of Liability.

ERRORS AND OMISSIONS

The information in this manual has been carefully checked and is believed to be accurate; however, no responsibility is assumed for clerical, typographical, or proofreading errors, or omissions.

Notice:

OMRON products are manufactured for use according to proper procedures by a qualified operator and only for the purposes described in this manual.

The following conventions are used to indicate and classify precautions in this manual. Always heed the information provided with them. Failure to heed precautions can result in injury to people or damage to the product.

⚠DANGER Indicates information that, if not heeded, is likely to result in loss of life or serious injury.

⚠WARNING Indicates information that, if not heeded, could possibly result in loss of life or serious injury.

⚠Caution Indicates information that, if not heeded, could result in relatively serious or minor injury, damage to the product, or faulty operation.

OMRON Product References

All OMRON products are capitalized in this manual. The word “Unit” is also capitalized when it refers to an OMRON product, regardless of whether or not it appears in the proper name of the product.

The abbreviation “Ch,” which appears in some displays and on some OMRON products, often means “word” and is abbreviated “Wd” in documentation in this sense.

The abbreviation “PC” means Programmable Controller and is not used as an abbreviation for anything else.

Visual Aids

The following headings appear in the left column of the manual to help you locate different types of information.

Note Indicates information of particular interest for efficient and convenient operation of the product.

1,2,3... 1. Indicates lists of one sort or another, such as procedures, checklists, etc.

© OMRON, 1996

All rights reserved. No part of this publication may be reproduced, stored in a retrieval system, or transmitted, in any form, or by any means, mechanical, electronic, photocopying, recording, or otherwise, without the prior written permission of OMRON.

No patent liability is assumed with respect to the use of the information contained herein. Moreover, because OMRON is constantly striving to improve its high-quality products, the information contained in this manual is subject to change without notice. Every precaution has been taken in the preparation of this manual. Nevertheless, OMRON assumes no responsibility for errors or omissions. Neither is any liability assumed for damages resulting from the use of the information contained in this publication.

TABLE OF CONTENTS

PRECAUTIONS xiii

1 Intended Audience xiv
2 General Precautions xiv
3 Safety Precautions xiv
4 Operating Environment Precautions xv
5 Application Precautions xv

SECTION 1
Features and System Configuration 1

1-1 Features 2
1-2 System Configuration 3

SECTION 2
Specifications and Components. 5

2-1 Specifications 6
2-2 High-speed Counter Unit Components 12

SECTION 3
Wiring 15

3-1 External Connector Pins 16
3-2 Connector Wiring Method 16
3-3 I/O Circuit Configurations 18
3-4 Wiring Examples of Encoder Inputs 20
3-5 Wiring Example of External Control Inputs 22
3-6 Example of External Output Wiring 23

SECTION 4
Functions and Operating Modes. 25

4-1 Operating Modes. 26
4-2 DM and IR Bit Allocation. 27
4-3 Linear Mode 29
4-4 Circular Mode 31
4-5 Preset Mode. 33
4-6 Gate Mode. 36
4-7 Cumulative Gate Mode 37
4-8 Sampling Mode. 37
4-9 Input Types 38
4-10 Counter Reset Conditions 41
4-11 Data Processing with PC. 42

TABLE OF CONTENTS

SECTION 5
DM Area Allocation 45

5-1 DM Area Allocation in Simple Counter Mode 46
5-2 DM Area Allocation in Linear and Circular Modes 48
5-3 DM Area Allocation in Preset Mode 54
5-4 DM Area Allocation in Gate, Cumulative Gate, and Sampling Modes 60

SECTION 6
Guidance for Program Development 63

6-1 Operating Steps 64
6-2 Unit Number Setting 65

SECTION 7
Program Development with Drum Function 67

7-1 Performance Specifications of Drum Function 68
7-2 DM Area Settings and Functions 68
7-3 IR Area Settings and Functions 71
7-4 I/O Signal Timing Chart 74
7-5 Data Transfer Programs 75
7-6 Program Example for Linear Mode 80
7-7 Program Example for Circular Mode 82

SECTION 8
Program Development with Preset Function 85

8-1 Performance Specifications of Preset Function 86
8-2 DM Area Settings and Functions 87
8-3 IR Area Settings and Functions 89
8-4 I/O Signal Timing Chart 92
8-5 Data Transfer Programs 93
8-6 Program Example for Preset Mode 97

SECTION 9
Program Development with Counting Function 101

9-1 Performance Specifications of Counting Function 102
9-2 DM Area Settings and Functions 102
9-3 IR Area Settings and Functions 103
9-4 I/O Signal Timing Chart 105
9-5 Program Example for Gate Mode 107
9-6 Program Example for Cumulative Gate Mode 109
9-7 Program Example 1 for Sampling Mode 111
9-8 Program Example 2 for Sampling Mode 112

TABLE OF CONTENTS

SECTION 10
Using IORD and IOWR Instructions 115

10-1 IORD and IOWR Instructions 116
10-2 Control Codes of IORD and IOWR Instructions 119
10-3 Types of Data Written with IOWR Instruction 121
10-4 Program Examples with IORD Instruction 123
10-5 Program Examples with IOWR Instruction 124
10-6 Flags Used for IOWR Instruction and Data Transfer 126

SECTION 11
Error Processing and Troubleshooting 127

11-1 Error Processing 128
11-2 Errors Monitored with CPU 130

Appendices

A Comparison with C200H-CT001-V1 133
B Data Area Allocation 135
C DM Coding Sheet Unit Number □: DM □□00 to DM □□99 145
D Using with CS1-series PCs 147

Index 151

Revision History 157

About this Manual:

This manual describes the installation and operation of the C200H-CT021 High-speed Counter Unit and includes the sections described below.

Please read this manual carefully and be sure you understand the information provided before attempting to install and operate the C200H-CT021 High-speed Counter Unit. **Be sure to read the precautions in the next section.**

Section 1 provides a list of features and a system configuration example.

Section 2 provides the Unit's basic specifications and describes its major components.

Section 3 explains how to connect various input and output devices to the High-speed Counter Unit.

Section 4 describes the High-speed Counter Unit functions and their operating modes.

Section 5 provides information on the DM and IR bit allocation in each mode.

Section 6 describes the steps required to operate the High-speed Counter Unit in each mode, the DM required for unit number settings, and IR bit allocation.

Section 7 describes program development using the drum function in linear and circular modes.

Section 8 describes program development using the preset function.

Section 9 describes program development using the counting function in gate, latch, and sampling modes.

Section 10 provide information on using the IORD and IOWR instructions.

Section 11 provides information on error processing and troubleshooting procedures.

The ***Appendices*** provide a comparison with the C200H-CT001-V1, information on data area allocation, and a DM coding sheet.

⚠ **WARNING** Failure to read and understand the information provided in this manual may result in personal injury or death, damage to the product, or product failure. Please read each section in its entirety and be sure you understand the information provided in the section and related sections before attempting any of the procedures or operations given.

PRECAUTIONS

This section provides general precautions for using the Programmable Controller (PC) and the High-speed Counter Unit.

The information contained in this section is important for the safe and reliable application of the PC and the High-speed Counter Unit. You must read this section and understand the information contained before attempting to set up or operate a PC system.

1 Intended Audience xiv
2 General Precautions xiv
3 Safety Precautions xiv
4 Operating Environment Precautions. xv
5 Application Precautions xv

1 Intended Audience

This manual is intended for the following personnel, who must also have knowledge of electrical systems (an electrical engineer or the equivalent).

- Personnel in charge of installing FA systems.
- Personnel in charge of designing FA systems.
- Personnel in charge of managing FA systems and facilities.

2 General Precautions

The user must operate the product according to the performance specifications described in the operation manuals.

Before using the product under conditions which are not described in the manual or applying the product to nuclear control systems, railroad systems, aviation systems, vehicles, combustion systems, medical equipment, amusement machines, safety equipment, and other systems, machines, and equipment that may have a serious influence on lives and property if used improperly, consult your OMRON representative.

Make sure that the ratings and performance characteristics of the product are sufficient for the systems, machines, and equipment, and be sure to provide the systems, machines, and equipment with double safety mechanisms.

This manual provides information for programming and operating OMRON PCs and the High-speed Counter Unit. Be sure to read this manual before attempting to use the High-speed Counter Unit and keep this manual close at hand for reference during operation.

⚠WARNING It is extremely important that a PC and all PC Units be used for the specified purpose and under the specified conditions, especially in applications that can directly or indirectly affect human life. You must consult with your OMRON representative before applying a PC System to the abovementioned applications.

3 Safety Precautions

⚠WARNING Do not attempt to take any Unit apart while the power is being supplied. Doing so may result in electric shock.

⚠WARNING Do not touch any of the terminals or terminal blocks while the power is being supplied. Doing so may result in electric shock.

⚠WARNING Do not attempt to disassemble, repair, or modify any Units. Any attempt to do so may result in malfunction, fire, or electric shock.

⚠WARNING Provide safety measures in external circuits (i.e., not in the Programmable Controller), including the following items, in order to ensure safety in the system if an abnormality occurs due to malfunction of the PC or another external factor affecting the PC operation. Not doing so may result in serious accidents.

- Emergency stop circuits, interlock circuits, limit circuits, and similar safety measures must be provided in external control circuits.

- The PC will turn OFF all outputs when its self-diagnosis function detects any error or when a severe failure alarm (FALS) instruction is executed. As a countermeasure for such errors, external safety measures must be provided to ensure safety in the system.
- The PC outputs may remain ON or OFF due to deposition or burning of the output relays or destruction of the output transistors. As a countermeasure for such problems, external safety measures must be provided to ensure safety in the system.

4 Operating Environment Precautions

⚠ **Caution** Do not operate the control system in the following locations:

- Locations subject to direct sunlight.
- Locations subject to temperatures or humidity outside the range specified in the specifications.
- Locations subject to condensation as the result of severe changes in temperature.
- Locations subject to corrosive or flammable gases.
- Locations subject to dust (especially iron dust) or salts.
- Locations subject to exposure to water, oil, or chemicals.
- Locations subject to shock or vibration.

⚠ **Caution** Take appropriate and sufficient countermeasures when installing systems in the following locations:

- Locations subject to static electricity or other forms of noise.
- Locations subject to strong electromagnetic fields.
- Locations subject to possible exposure to radioactivity.
- Locations close to power supplies.

⚠ **Caution** The operating environment of the PC system can have a large effect on the longevity and reliability of the system. Improper operating environments can lead to malfunction, failure, and other unforeseeable problems with the PC system. Be sure that the operating environment is within the specified conditions at installation and remains within the specified conditions during the life of the system.

5 Application Precautions

Observe the following precautions when using the PC system.

⚠ **WARNING** Always heed these precautions. Failure to abide by the following precautions could lead to serious or possibly fatal injury.

- Always ground the system to 100 Ω or less when installing the Units. Not connecting to a ground of 100 Ω or less may result in electric shock.
- Always turn OFF the power supply to the PC before attempting any of the following. Not turning OFF the power supply may result in malfunction or electric shock.
  - Mounting or dismounting I/O Units, CPU Units, Memory Units, or any other Units.
  - Assembling the Units.

- Setting DIP switches or rotary switches.
- Connecting cables or wiring the system.
- Connecting or disconnecting the connectors.

⚠ **Caution** Failure to abide by the following precautions could lead to faulty operation of the PC or the system, or could damage the PC or PC Units. Always heed these precautions.

- Fail-safe measures must be taken by the customer to ensure safety in the event of incorrect, missing, or abnormal signals caused by broken signal lines, momentary power interruptions, or other causes.
- Always use the power supply voltages specified in this manual. An incorrect voltage may result in malfunction or burning.
- Take appropriate measures to ensure that the specified power with the rated voltage and frequency is supplied. Be particularly careful in places where the power supply is unstable. An incorrect power supply may result in malfunction.
- Install external breakers and take other safety measures against short-circuiting in external wiring. Insufficient safety measures against short-circuiting may result in burning.
- Do not apply voltages to the Input Units in excess of the rated input voltage. Excess voltages may result in burning.
- Do not apply voltages or connect loads to the Output Units in excess of the maximum switching capacity. Excess voltage or loads may result in burning.
- Disconnect the functional ground terminal when performing withstand voltage tests. Not disconnecting the functional ground terminal may result in burning.
- Be sure that all the mounting screws, terminal screws, and cable connector screws are tightened to the torque specified in this manual. Incorrect tightening torque may result in malfunction.
- Leave the label attached to the Unit when wiring. Removing the label may result in malfunction if foreign matter enters the Unit.
- Remove the label after the completion of wiring to ensure proper heat dissipation. Leaving the label attached may result in malfunction.
- Double-check all wiring and switch settings before turning ON the power supply. Incorrect wiring may result in burning.
- Wire correctly. Incorrect wiring may result in burning.
- Mount Units only after checking terminal blocks and connectors completely.
- Be sure that the terminal blocks, Memory Units, expansion cables, and other items with locking devices are properly locked into place. Improper locking may result in malfunction.
- Check the user program for proper execution before actually running it on the Unit. Not checking the program may result in an unexpected operation.
- Confirm that no adverse effect will occur in the system before attempting any of the following. Not doing so may result in an unexpected operation.
  - Changing the operating mode of the PC.
  - Force-setting/force-resetting any bit in memory.
  - Changing the present value of any word or any set value in memory.

- Resume operation only after transferring to the new CPU Unit the contents of the DM Area, HR Area, and other data required for resuming operation. Not doing so may result in an unexpected operation.
- Do not pull on the cables or bend the cables beyond their natural limit. Doing either of these may break the cables.
- Do not place objects on top of the cables or other wiring lines. Doing so may break the cables.
- Use crimp terminals for wiring. Do not connect bare stranded wires directly to terminals. Connection of bare stranded wires may result in burning.
- When replacing parts, be sure to confirm that the rating of a new part is correct. Not doing so may result in malfunction or burning.
- Before touching a Unit, be sure to first touch a grounded metallic object in order to discharge any static built-up. Not doing so may result in malfunction or damage.

SECTION 1
Features and System Configuration

This section provides a list of features and a system configuration example.

1-1 Features. 2
1-2 System Configuration. 3

1-1 Features

The C200H-CT021 High-speed Counter is a Special I/O Unit for the C200H, C200HS, C200HX, C200HG, and C200HE PCs.

The High-speed Counter Unit has the following features.

Two Built-in Counters

The High-speed Counter Unit has two high-speed increment/decrement counters, each of which can be connected to an incremental encoder with open collector output to count line driver input pulses at a rate of 75,000 cps max.

Built-in Line Driver Input Circuit

An encoder with RS-422 line driver output can be directly connected to the High-speed Counter Unit. Line driver input resists noise, thus making it possible to connect the encoder to the High-speed Counter Unit through a long cable or to wire the cable in places where noise may be generated.

An open collector output from an encoder can be connected as a line driver input to the High-speed Counter Unit through the C500-AE001 Encoder Conversion Adapter.

Counts in BCD or Hexadecimal

The High-speed Counter Unit can count BCD or hexadecimal values.

The following are the available counting ranges.

BCD: –8,388,608 to 8,388,607

Hexadecimal: 800000 to FFFFFF (–8,388,608 to –1) and 000000 to 7FFFFF (0 to 8,388,607)

Refer to page 10 for the data configuration of the count value in hexadecimal.

Seven Operating Modes

The High-speed Counter Unit has the following three functions and seven operating modes. None of the three functions are available to the High-speed Counter Unit in simple counter mode, which is the basic operating mode of the High-speed Counter Unit.

Simple Counter Mode: Counts the number of input pulses.

Drum Function

Linear Mode: Controls outputs when the count value is in a preset range. The High-speed Counter Unit counts the number of pulses within the available counting ranges.

Circular Mode: Controls outputs when the count value is within a preset range. The High-speed Counter Unit counts the number of pulses from zero to the maximum countable value preset with the High-speed Counter Unit. The count value is reset to zero after it reaches the maximum countable value.

Preset Counter Function

Preset Mode: Controls outputs after counting a preset value.

Counting Function

Gate Mode: Counts the number of pulses only while the control input signal is turned ON.

Cumulative Gate Mode: Accumulates the number of pulses whenever the control input signal is turned ON.

Sampling Mode: Counts the number of pulses for a preset interval from the rising edge of the control signal.

Eight Types of External Outputs

The High-speed Counter Unit has eight external outputs, either NPN or PNP.

Three Types of Pulse Inputs

The following three types of pulse inputs are available.

- Offset phase inputs

- Up and down pulse inputs
- Pulse and direction inputs

The High-speed Counter Unit has a function to multiply offset phase inputs by two or four. The resolution of the High-speed Counter Unit can be increased in proportion to the number of pulses input from encoders.

Change Present and Set Values During High-speed Counter Unit Operation

The High-speed Counter Unit in normal operation uses settings that are read when the High-speed Counter Unit is turned ON. The settings, which include the present counter values of the High-speed Counter Unit, can be changed anytime.

1-2 System Configuration

Discriminating Product Sizes

In the following example, the size of each product on the belt conveyor is measured and improper-sized products are removed from the line using the solenoid.

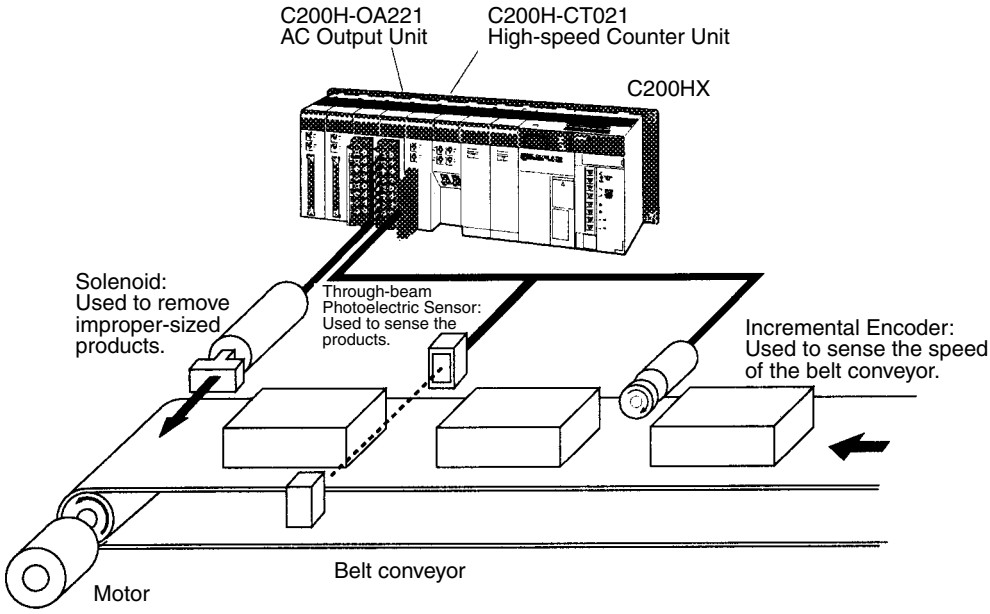

The High-speed Counter Unit counts the number of pulses that is input from the encoder while each product is passing between the emitter and receiver of the through-beam photoelectric sensor.

When the count value of a product is not within the range preset with the High-speed Counter Unit, the solenoid will be activated and the product will be removed from the line.

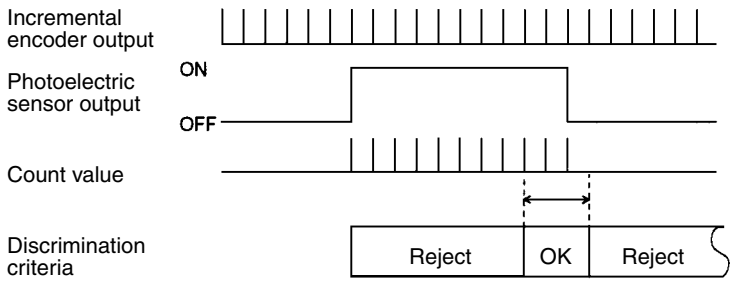

Number of Mounted Units

The maximum number of High-speed Counter Units and other Special I/O Units that can be mounted to the C200HX, C200HG, or C200HE CPU Rack, Expansion I/O Rack, or Slave Rack is 16 and the maximum number of those mounted to any other PC is 10.

Note

1. A maximum of four High-speed Counter Units can be mounted to the Slave Rack.
2. Do not mount the High-speed Counter Unit to the two slots on the right of the CPU.
3. Do not mount the High-speed Counter Unit to the Slave Rack if the IORD or IOWR instruction is to be used with the C200HX, C200HG, or C200HE.

SECTION 2
Specifications and Components

This section provides the Unit's basic specifications and describes its major components.

2-1 Specifications 6
2-1-1 General Specifications 6
2-1-2 Characteristics 6
2-1-3 I/O Electrical Specifications 7
2-1-4 Counting Speed 9
2-1-5 BCD or Hexadecimal Count Values. 10
2-1-6 Dimensions. 11
2-1-7 Dimensions with High-speed Counter Unit Mounted 11
2-2 High-speed Counter Unit Components 12
2-2-1 Nomenclature. 12
2-2-2 Indicator Functions 12
2-2-3 Switch Settings. 13
2-2-4 Rear Setting Switch 13

2-1 Specifications

2-1-1 General Specifications

The general specifications conform to the C-series specifications.

2-1-2 Characteristics

Item		Specification
Number of counters		2
Operating modes		Simple counter, linear counter, circular counter, preset counter, gate counter, cumulative gate counter, and sampling modes.
Count inputs	Input signals	Counter 1 inputs A and B and counter 2 inputs A and B
	Signal levels	RS-422 line driver signal (equivalent to Am26LSS31), 12 or 24 VDC (selectable)
	Types of inputs	Offset phase inputs Up and down pulse inputs Pulse+direction inputs
	Counting rate	Voltage input: 50,000 cps max. at a line driver input rate of 75,000 cps max. The counting speed of the number of offset phase input pulses varies with the encoder. Refer to page 9 for details.
	Others	The multiple function (x 1, x 2, or x 4) can be selected for offset phase input
External inputs	Input signal	Counter 1 input Z, Counter 2 input Z
	Signal levels	RS-422 line driver signal (equivalent to Am26LSS31), 12 or 24 VDC (selectable)
	Input signal	Counter 1 external control input IN1 Counter 1 external control input IN2 Counter 2 external control input IN1 Counter 2 external control input IN2
	Signal levels	12 VDC and 24 VDC
External outputs	Outputs	External outputs 0 to 7, 8 points NPN or PNP output (selectable)
	Switching capacity	Output power supply: 16 to 80 mA at 5 to 24 VDC
Internal current consumption		400 mA max. at 5 VDC (Supplied from Backplane.)
Dimensions (mm)		130 × 35 × 100.5 (H × W × D)
Weight		305 g (excluding connectors)

2-1-3 I/O Electrical Specifications

Input Characteristics

Item	Counter inputs A, B, and Z			External control inputs IN1 and IN2
Input voltage	12 VDC ±10%	24 VDC ±10%	RS-422 line driver	12 to 24 VDC ±10%
Input current	14 mA (typical) at each voltage (12.9 to 17.1 mA)		Conform to RS-422 line driver (Am26LS31) specifications.	4 to 11 mA
ON voltage (min.)	5.6 VDC	15.2 VDC		10.2 VDC
OFF voltage (max.)	2.4 VDC	4.8 VDC		3.0 VDC
ON/OFF response time (max.)	---	---		0.1 ms
Minimum response pulse	Counter Inputs A and B Waveform Input rising time/calling time: 3 µs max. at 50 kHz with pulses with a duty factor of 50% 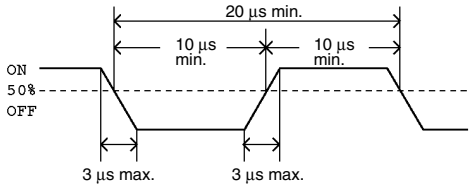 Relationship between A and B phases with offset phase input 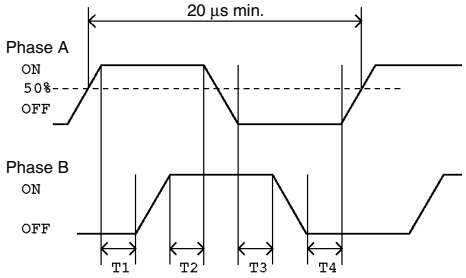 T1, T2, T3, and T4: 4.5 µs min. The switching time between A and B phases must be 4.5 µs min. Counter Input Z A pulse width of 100 µs min. is required. 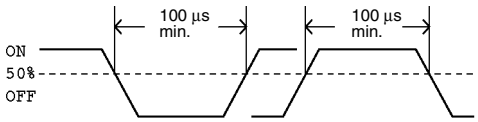 	Counter Inputs A and B Waveform At 75 kHz with pulses with a duty factor of 50% 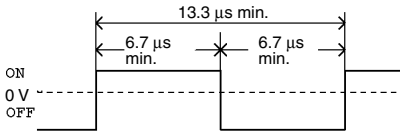 Relationship between A and B phases with offset phase input 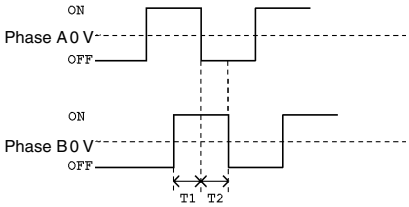 T1 and T2: 3.2 µs min. The switching time between A and B phases must be 3.2 µs min. Counter Input Z A pulse width of 100 µs min. is required. 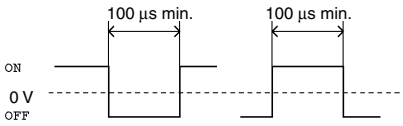 	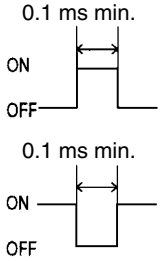 When accessing these signals from the PC, the signals must be ON longer than the PC's cycle time.

Output Characteristics

Item	External Outputs 0 to 7
Max. switching capacity	16 mA at 4.5 VDC to 80 mA at 26.4 VDC (See the following graph.) 320 mA max./common
Leakage current	0.1 A max.
Residual voltage	0.8 V max.
ON/OFF response time	0.2 ms max.
External power supply	5 to 24 VDC ±10% (50 mA max. at 26.4 VDC)

The maximum switching current depends upon the power supply voltage, as shown below.

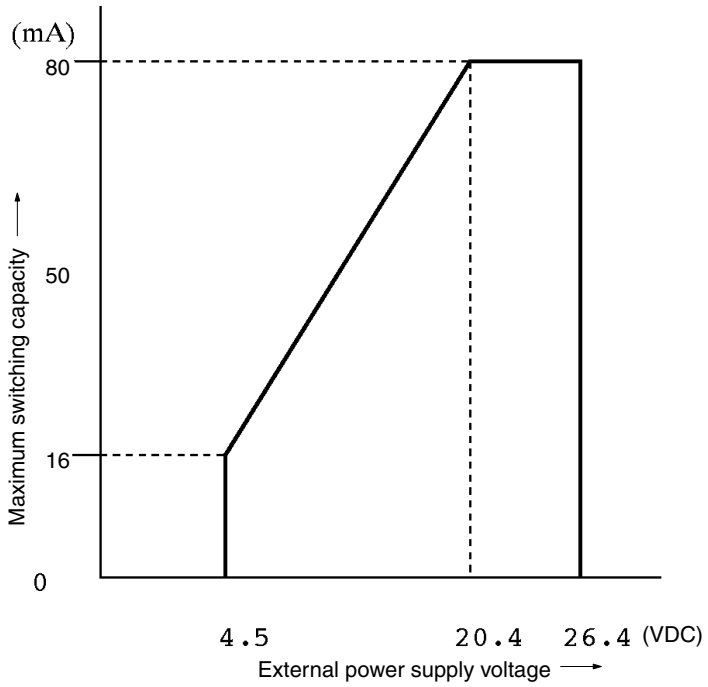

Note The output current must not exceed 0.5 A per common (i.e., eight points), otherwise the built-in fuse will blow out. The built-in fuse cannot be replaced by the user.

2-1-4 Counting Speed

The maximum response pulse frequency of the High-speed Counter for offset phase inputs is determined with the type of increment encoder connected to the High-speed Counter. In this following example, OMRON's E6B-CWZ3C Encoder is connected to the High-speed Counter.

Example:E6B-CWZ3C (500 pulses/time)

Ratings

Item	Specification
Power supply voltage	5 VDC (–5%) to 12 V (+10%) with a peak-to-peak ripple rate of 5% max.
Current consumption	50 mA max.
Resolution (P/R)	500
Output phases	Phase A, phase B, phase Z
Output type	Open collector output
Output capacity	Applied voltage: 30 VDC max.
	Sink current: 80 mA max.
	Residual voltage: 1 V max (when the sink current is 80 mA) 0.4 V max (when the sink current is 20 mA)
Max. response frequency	30 KHz
Output phase difference	A/B phase difference 90°±45° ($^1/_4 \pm ^1/_8$T)
Output rise/fall time	1.0 μs max. (Control output voltage 5 V, load resistance 1 KΩ, cord length 50 cm)

Clockwise (CW) Rotation

Phase A is advanced $^1/_4 \pm ^1/_8$T phase ahead of phase B.

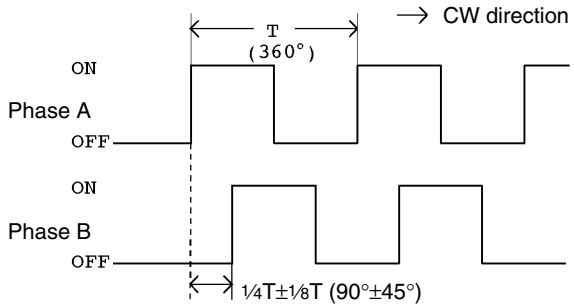

Counterclockwise (CCW) Rotation

Phase A is delayed $^1/_4 \pm ^1/_8$T phase behind phase B.

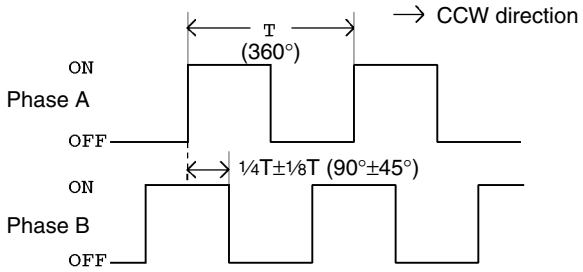

The output offset phase is 90°±45°. Therefore, the greatest offset phase of the encoder is 45° (i.e., 90° – 45°).

The Unit requires a minimum offset phase of 3.2 μs.
Thus:

$$\frac{4.5\,\mu s}{T} < \frac{45°}{360°}$$

(When the rise and fall of the Encoder's output are equivalent.)

$$T < 36\,\mu s$$

(T is the minimum pulse period that for responses.)

Inverting the period yields the maximum frequency of 27.7K cps.

$$\frac{1}{T} < \frac{1}{36\,\mu s} = 27.7\text{K cps}$$

(78 revolutions/s when there are 500 pulses/revolution)

From the above, use the High-speed Counter at a maximum counting speed of 27,000 cps if the High-speed Counter is connected to an encoder with a maximum response frequency of 27,000 cps.

Note The pulse width of counter input Z must be 100 μs min. if the counter is reset with a Z-phase input from the encoder at a repetition frequency of 2000 cps max.
The repetition frequency of line driver input must be 1,000 cps when considering the software processing time.

2-1-5 BCD or Hexadecimal Count Values

The High-speed Counter Unit can set the present counter value and the upper and lower limit count values in BCD or hexadecimal.

The High-speed Counter Unit can process hexadecimal values faster than BCD values because it need not convert the hexadecimal values into BCD values.

Refer to the following for the data configuration's BCD and hexadecimal count values.

BCD

Example:Present counter value

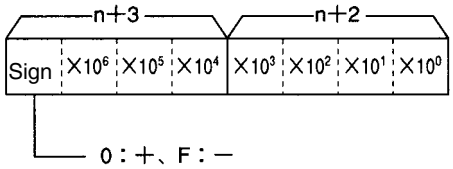

The above is the data configuration of the present counter value stored in words n+2 and n+3 of the data area.

Counting range: –8,388,608 to 8,388,607

Hexadecimal

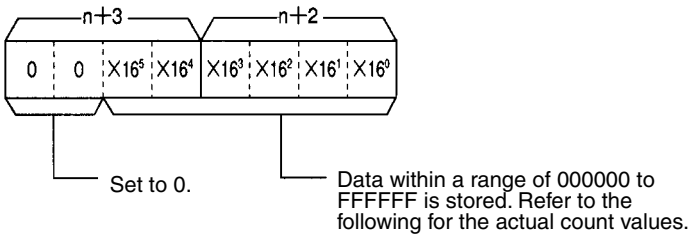

The sign of the hexadecimal value is determined with 2's complement of the leftmost bit.

Example:
In the following example, the count value is FFFFFF.
– {1000000 – (FFFFFF)} = – 1 = – 1
Hex. Hex. Hex. BCD

In the following example, the count value is 800000.
– {1000000 – (800000)} = – 800000 = – 8,388,608
Hex. Hex. Hex. BCD

Therefore the following counting range can be obtained.

Hexadecimal	BCD
800000	(–8,388,608)
to	to
FFFFFF	(–1)
0	0
to	to
7FFFFF	(8,388607)

2-1-6 Dimensions

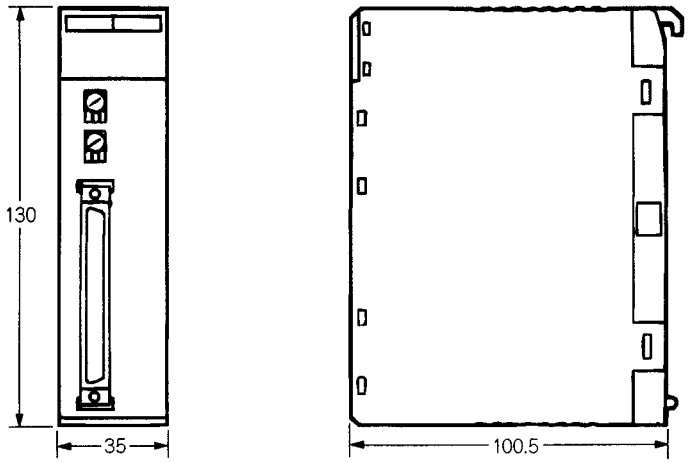

2-1-7 Dimensions with High-speed Counter Unit Mounted

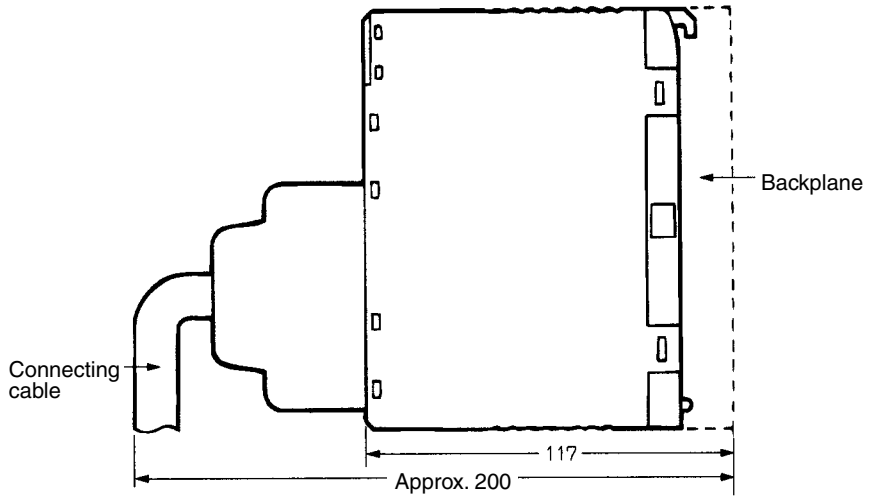

2-2 High-speed Counter Unit Components

2-2-1 Nomenclature

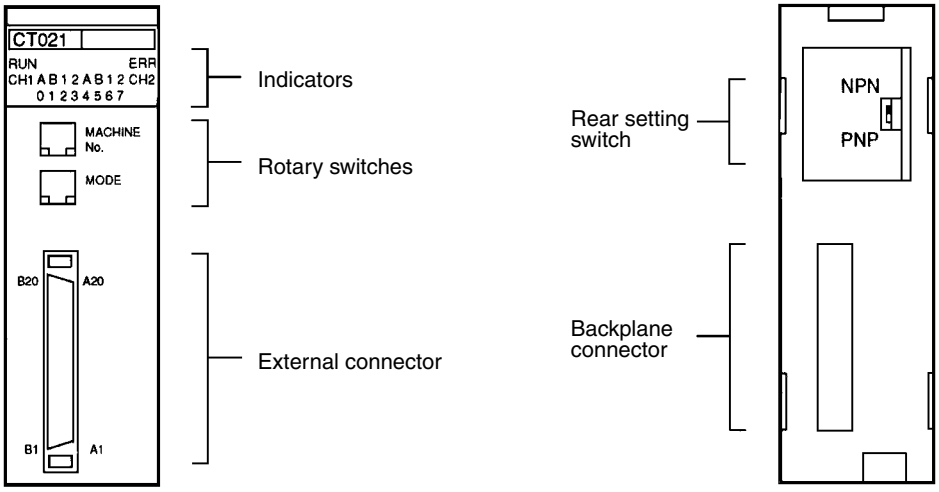

2-2-2 Indicator Functions

Indicator		Name	Function
RUN		Operation	Lit when the High-speed Counter is in normal counting operation. Not lit when the High-speed Counter stops counting pulses.
ERR		Error	Lit when an error, counter overflow, or counter underflow results.
CH1	A	Counter 1 input A	Lit when counter 1 input A is ON.
	B	Counter 1 input B	Lit when counter 1 input B is ON.
	1	Counter 1 external control input IN1	Lit when external control input IN1 is ON.
	2	Counter 1 external control input IN2	Lit when external control input IN2 is ON.
CH2	A	Counter 2 input A	Lit when counter 2 input A is ON.
	B	Counter 2 input B	Lit when counter 2 input B is ON.
	1	Counter 2 external control input IN1	Lit when external control input IN1 is ON.
	2	Counter 2 external control input IN2	Lit when external control input IN2 is ON.
01234567		External output	These indicators light when the corresponding external output (0 through 7) is ON.

2-2-3 Switch Settings

There are two rotary switches on the front panel of the High-speed Counter Unit, which can be used for unit number and operating mode settings.

Note

1. Be sure to turn OFF the High-speed Counter Unit before setting the unit number and operating mode.
2. Use a flat-blade screwdriver for rotary switch settings.
3. Be sure not to damage the grooves of the rotary switches with the flat-blade screwdriver. Do not leave either of the rotary switches set midway between numbers. Otherwise a setting error may occur.

Switch	Setting	Function
MACHINE No.	Unit number setting	Set the switch within a range of 0 to F.
MODE	Operating mode setting	Set the switch within a range of 0 to 6. 0: Simple counter mode 1: Linear mode 2: Circular mode 3: Preset mode 4: Gate mode 5: Cumulative gate mode 6: Sampling mode 7 to 9: Not used

Note The unit number must not be same as the unit number of any other Special I/O Unit or Position Control Unit in the same system, otherwise a setting error will result. Each unit number in the system must be unique.
The unit number can be set within a range of 0 to 9 if the C200H, C200HS, C200HE-CPU11/32/42(-Z), C200HG-CPU33/43(-Z), or C200HX-CPU34/44(-Z) is used with the High-speed Counter Unit.
The operating mode must be set within a range of 0 to 6. Do not set the operating mode to 7, 8, or 9, otherwise the High-speed Counter Unit will not operate.

2-2-4 Rear Setting Switch

The rear setting switch of the High-speed Counter Unit is used to select the output mode.

Switch	Function
NPN	Outputs 0 to 7 will be NPN outputs.
PNP	Outputs 0 to 7 will be PNP outputs.

SECTION 3
Wiring

This section explains how to connect various input and output devices to the High-speed Counter Unit.

⚠ **WARNING** Do not touch the terminals while the power is being supplied. Otherwise an electric shock may occur.

3-1 External Connector Pins 16
3-2 Connector Wiring Method 16
3-3 I/O Circuit Configurations 18
3-4 Wiring Examples of Encoder Inputs 20
3-5 Wiring Example of External Control Inputs. 22
3-6 Example of External Output Wiring. 23

3-1 External Connector Pins

The following table lists the allocation of the external connector pins on front side of the High-speed Counter Unit.

Row B	Pin no.	Row A
Counter 1 external control input IN2: 12 or 24 VDC	20	Counter 2 external control input IN2: 12 or 24 VDC
Counter 1 external control input IN1: 12 or 24 VDC	19	Counter 2 external control input IN1: 12 or 24 VDC
Counter 1 external control input IN1/ IN2: COM	18	Counter 2 external control input IN1/ IN2: COM
Counter 1 input Z: 24 VDC	17	Counter 2 input Z: 24 VDC
Counter 1 input Z: 12 VDC	16	Counter 2 input Z: 12 VDC
Counter 1 input Z: + (Line driver)	15	Counter 2 input Z: + (Line driver)
Counter 1 input Z: – (Line driver) 0 V	14	Counter 2 input Z: – (Line driver) 0 V
Counter 1 input B: 24 VDC	13	Counter 2 input B: 24 VDC
Counter 1 input B: 12 VDC	12	Counter 2 input B: 12 VDC
Counter 1 input B: + (Line driver)	11	Counter 2 input B: + (Line driver)
Counter 1 input B: – (Line driver) 0 V	10	Counter 2 input B: – (Line driver) 0 V
Counter 1 input A: 24 VDC	9	Counter 2 input A: 24 VDC
Counter 1 input A: 12 VDC	8	Counter 2 input A: 12 VDC
Counter 1 input A: + (Line driver)	7	Counter 2 input A: + (Line driver)
Counter 1 input A: – (Line driver) 0 V	6	Counter 2 input A: – (Line driver) 0 V
External output 0	5	External output 4
External output 1	4	External output 5
External output 2	3	External output 6
External output 3	2	External output 7
External output 0 to 7 COM: 0 V	1	Power supply for external outputs 0 to 7: 5 to 24 VDC

Each external connector is attached with a soldering terminal (Fujitsu FCN-361J040).

3-2 Connector Wiring Method

The connectors of the High-speed Counter Unit must be soldered.

⚠ **Caution** Do not remove the label on top of the High-speed Counter Unit before wiring the connectors, otherwise wire cuttings may fall into the High-speed Counter Unit and short-circuit the internal circuitry causing the Unit to malfunction.

⚠ **Caution** Be sure to remove the label on top of the High-speed Counter Unit after wiring the connectors, otherwise the Unit in operation may overheat and malfunction.

⚠ **Caution** Make sure that all connectors are correctly connected to the High-speed Counter Unit, otherwise the Unit may burn.

⚠ **Caution** Make sure that all connectors are wired correctly, otherwise the High-speed Counter Unit may burn.

Note 1. The thickness of each wire connected to the High-speed Counter Unit must be 0.3 mm^2 max.

2. Do not short-circuit any terminals when wiring. Covering each soldered portion with an insulating tube is recommended.
3. When using multi-conductor cables, separate the input and output cables.

Wires

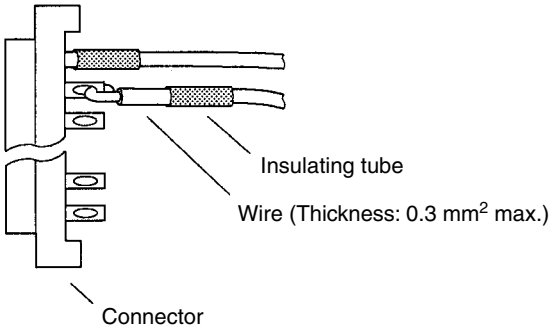

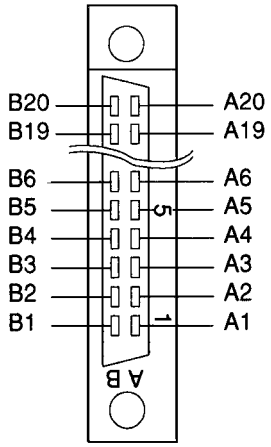

Connector terminal side

Cable Separation

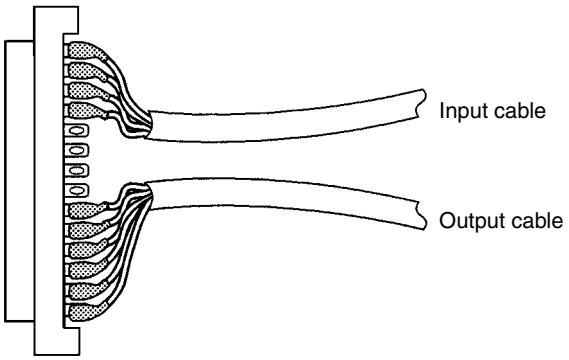

Assembling Connectors

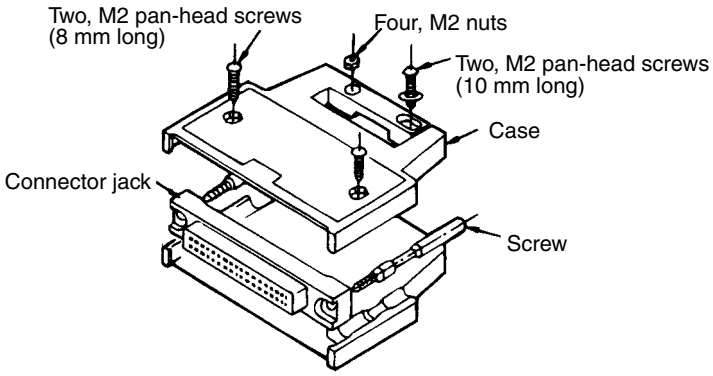

The following Fujitsu 360-series parts are available.

1. FCN-361J040-AU (solder terminal)
   FCN-360C040-B (cover)
2. FCN-363J040 (solderless terminal housing)
   FCN-363J-AU (contact)
3. FCN-367J040-AU/F (solderless terminal)

Wiring Precautions

Refer to the following for noise prevention when wiring counter inputs A, B, and Z.

1,2,3...

1. Use shielded, twisted-pair cable and ground the shield to a resistance of 100 Ω max.
2. Make the wiring as short as possible and do not run the wires parallel to lines that produce a lot of noise, such as high-power lines.
3. Try to use a separate stabilized power supply for the High-speed Counter Unit and another power supply for other I/O.
4. Be sure not to reverse the polarity when wiring a line driver input.
5. Be sure to connect wires to a 5- to 24-VDC output power supply terminal and COM (0 V) terminal correctly. If the wires are connected to these terminals reversely, the built-in fuse will blow out. The built-in fuse cannot be replaced by the user.

3-3 I/O Circuit Configurations

Input Configuration

Terminals numbers in parentheses are used with counter 2.

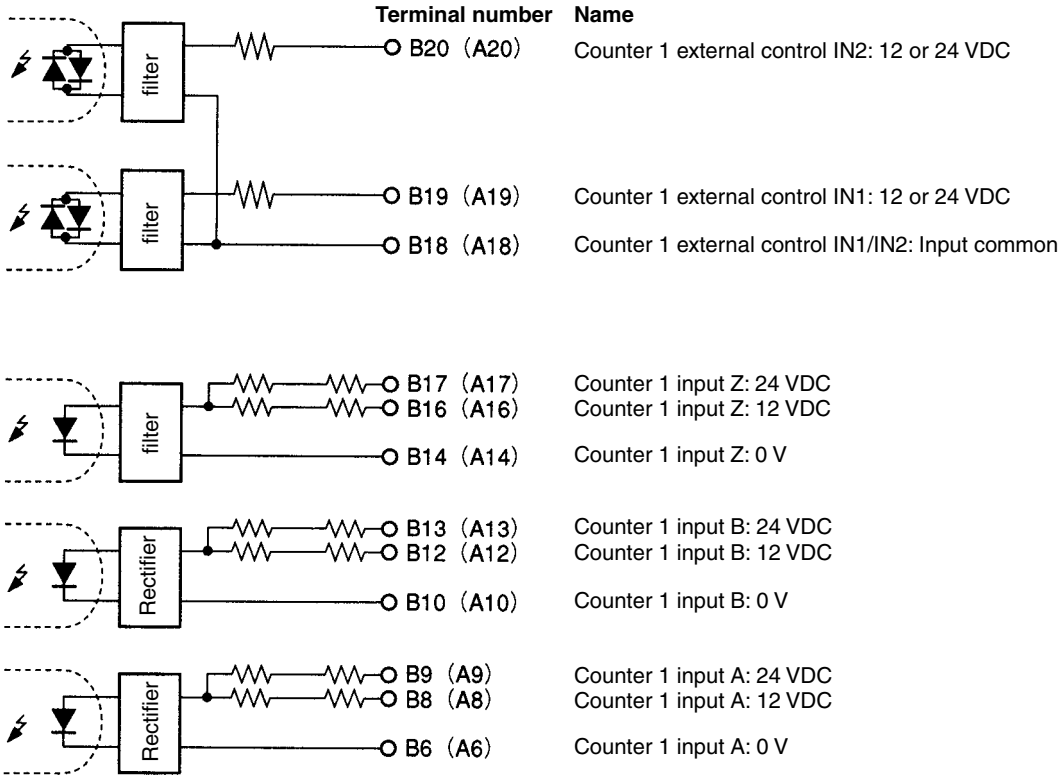

Line Driver Input Configuration

Terminals numbers in parentheses are used with counter 2.

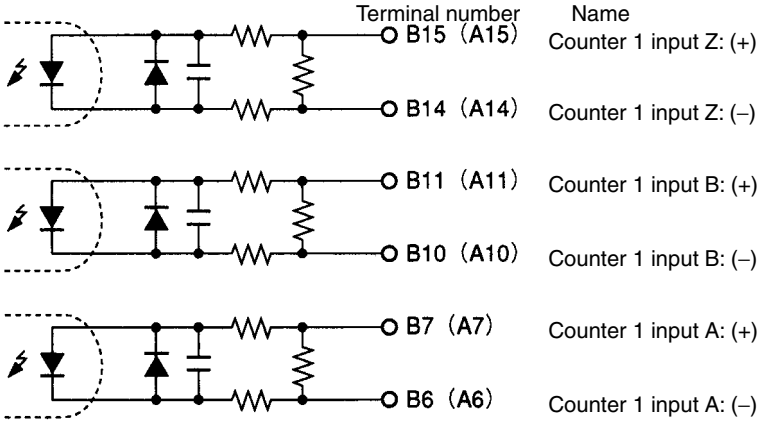

External Output Configuration

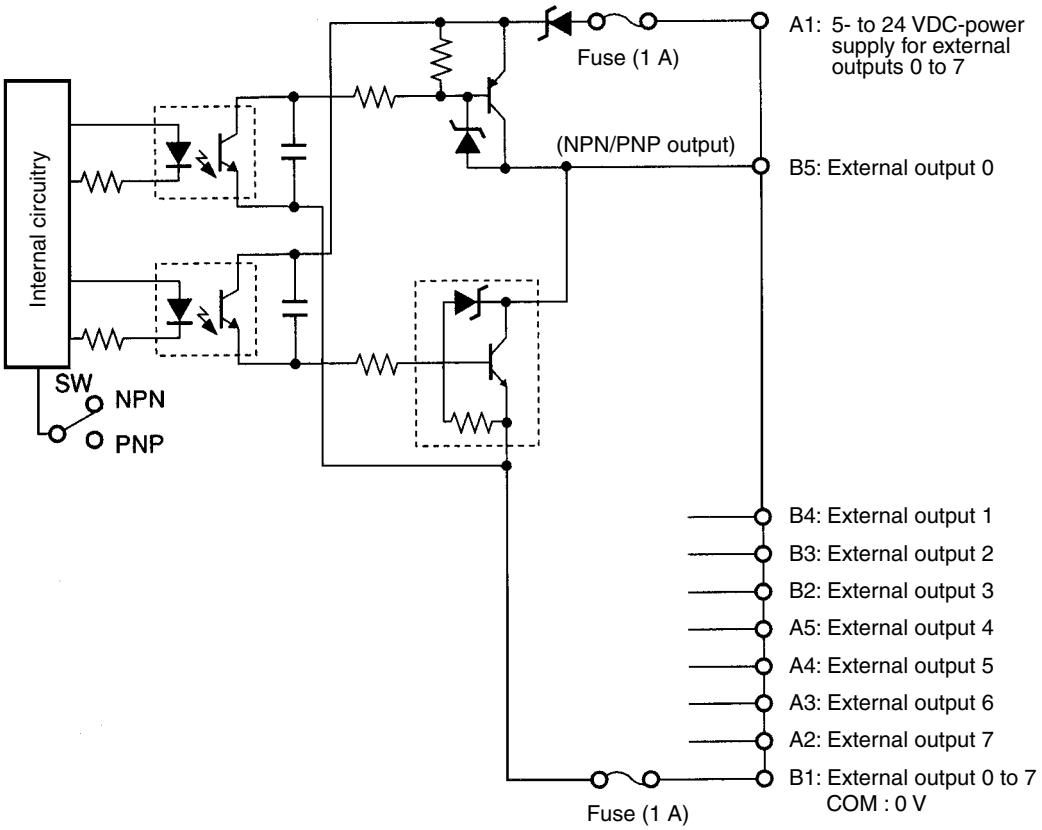

3-4 Wiring Examples of Encoder Inputs

The following are wiring examples of an encoder with A, B, and Z-phase outputs.

Wiring Example 1: 12-VDC Open-collector Encoder

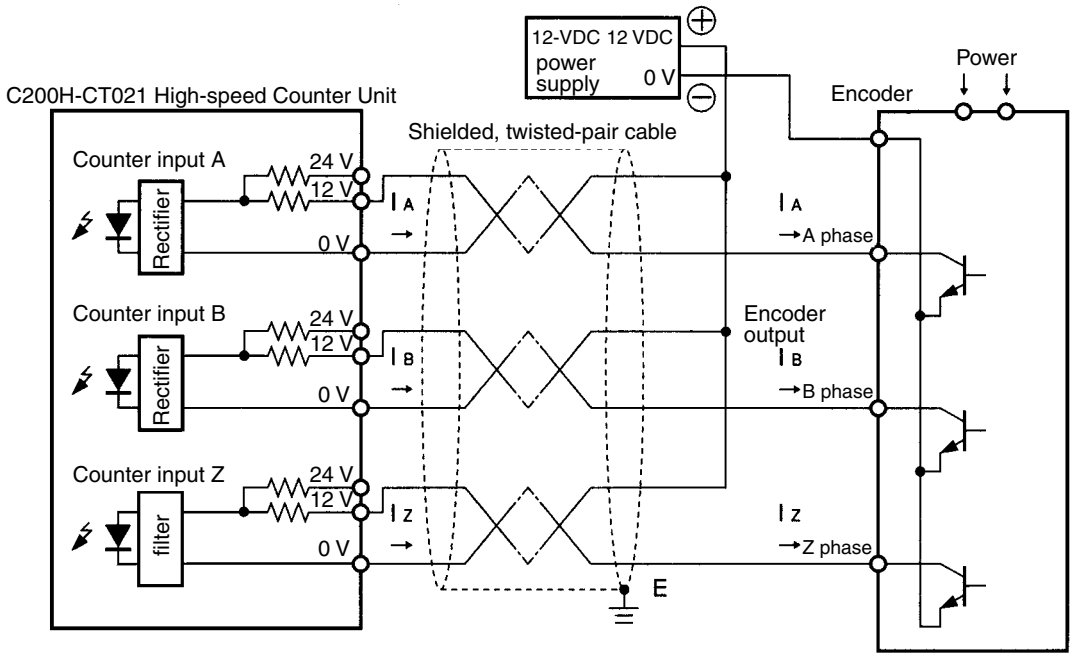

Wiring Example 2: 12-VDC Voltage-output (Sink Load) Encoder

In the following example, an input to the High-speed Counter Unit will be turned OFF when an output from the encoder is H and an input to the Unit will be turned ON when an output from the encoder is L.

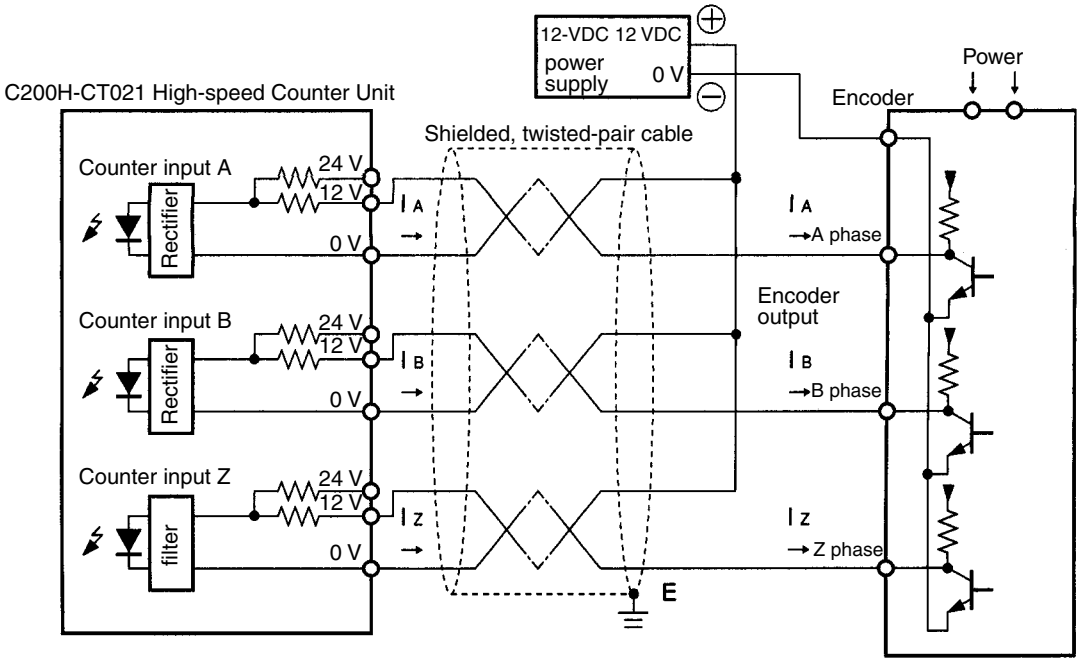

Wiring Example 3: 12-VDC Voltage-output (Source load) Encoder

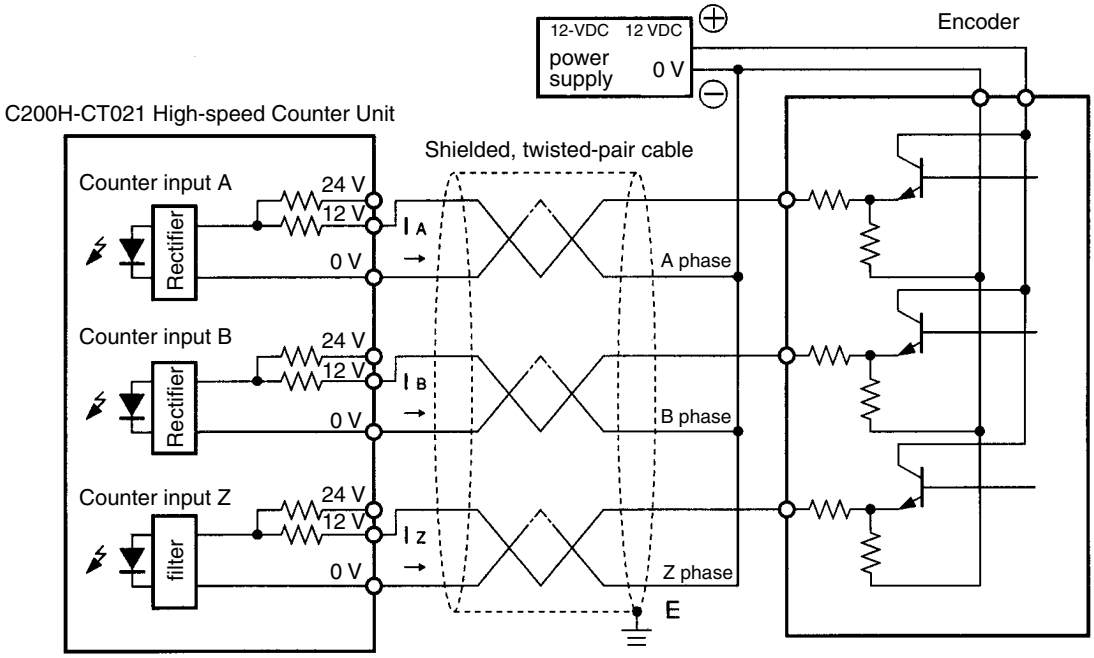

Wiring Example 4: Line-driver Output (Am26LS31 or Equivalent) Encoder

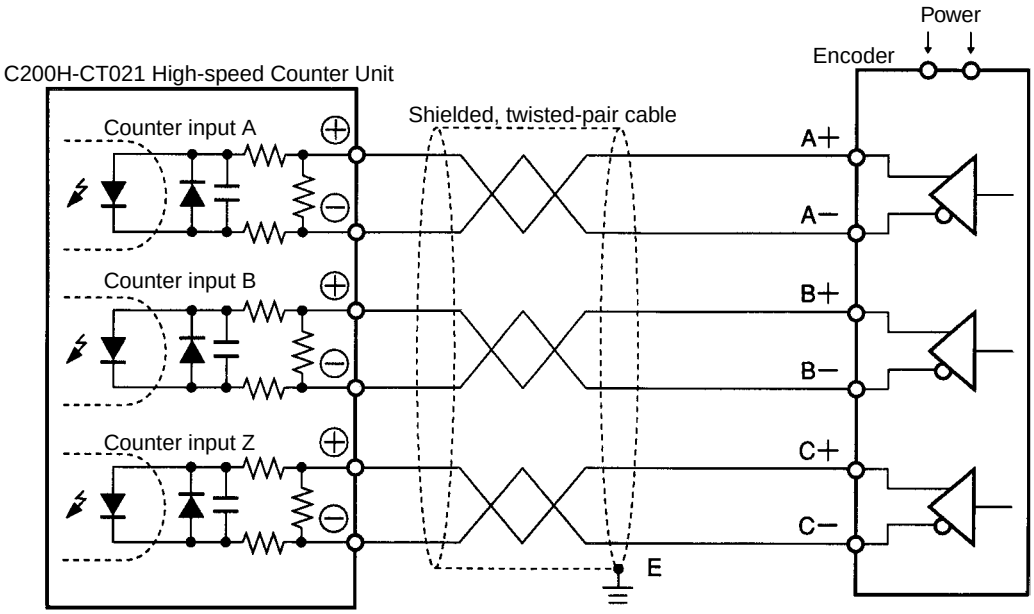

Example 5: With Encoder Conversion Adapter

In the following example, open collector outputs from an encoder is connected as line driver inputs through the C500-AE001 Encoder Conversion Adapter.

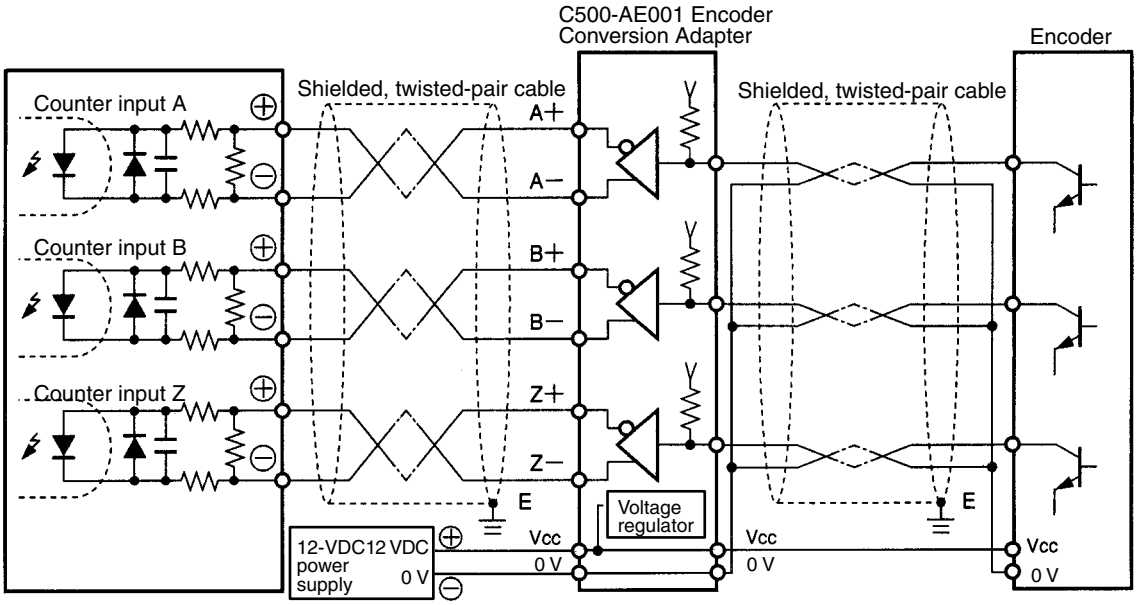

Note Connect the wires so that a counter input to the High-speed Counter Unit will be turned ON when an output from the encoder is turned ON.
The C500-AE001 Encoder Conversion Adapter uses an Am26LS31-compatible line driver. H will be output to the positive terminal and L will be output to the negative terminal of the C500-AE001 when an input to the C500-AE001 is H.

3-5 Wiring Example of External Control Inputs

In order to prevent chatter at the input, use solid-state as much as possible.

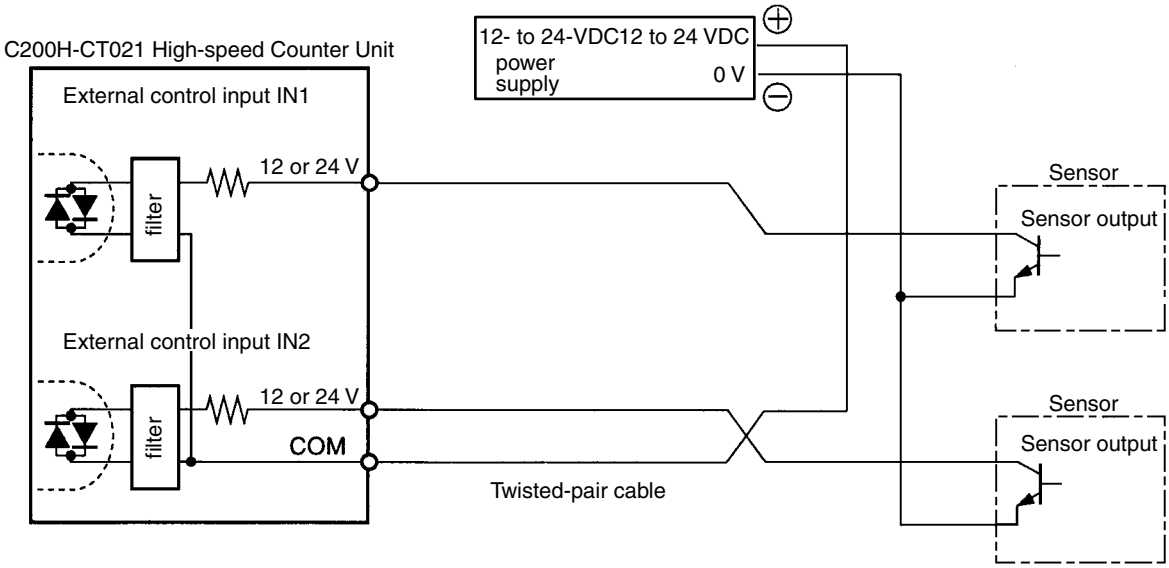

3-6 Example of External Output Wiring

In the following example, relays are connected to external outputs 0 to 3 and TTLs are connected to external outputs 4 to 7.

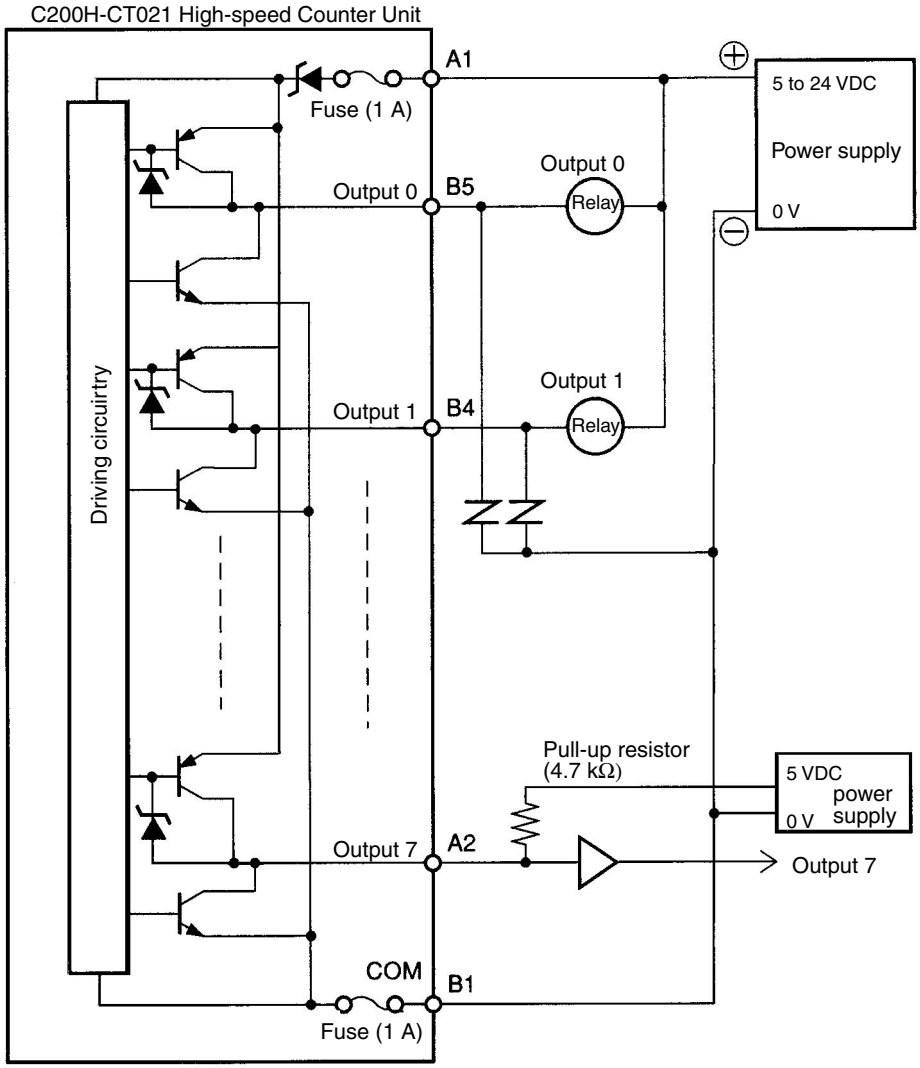

Note In the above connection example, the output power supply voltage must be higher than the load supply voltage, and if the external power supply is different from the load power supply, make sure that the external power supply voltage is the same as or higher than the load supply voltage.

SECTION 4
Functions and Operating Modes

This section describes the High-speed Counter Unit functions and their operating modes.

4-1 Operating Modes 26
4-2 DM and IR Bit Allocation 27
4-3 Linear Mode 29
4-3-1 Operation Example 29
4-3-2 Configuration of Range 29
4-4 Circular Mode. 31
4-4-1 Configuration of Range 32
4-5 Preset Mode 33
4-5-1 External Output Pattern 34
4-5-2 Count Range for Output Control 34
4-5-3 Configuration of Range 34
4-6 Gate Mode 36
4-7 Cumulative Gate Mode. 37
4-8 Sampling Mode 37
4-8-1 Configuration of Sampling Time 38
4-9 Input Types 38
4-10 Counter Reset Conditions. 41
4-11 Data Processing with PC 42

4-1 Operating Modes

The High-speed Counter Unit can operate in any of the following seven modes selected with the rotary switch on the front panel of the High-speed Counter Unit. The modes other than the simple counter modes are classified according to the function.

Drum Function
Linear mode
Circular mode

Preset Function
Preset mode

Counting Function
Gate mode
Cumulative gate mode
Sampling mode

MODE	Operating mode	Function	Page
0	Simple Counter Mode	Counts the number of input pulses within a range of –8,388,608 to 8,388,607.	---
1	Linear Mode	A total of 16 ranges with upper and lower limits between –8,388,608 and 8,388,607 can be set and when the count value is within one of the ranges, 8-point signals can be output.	29
2	Circular Mode	A total of 16 ranges with upper and lower limits between 0 and 65,535 can be set and when the count value is within one of the ranges, 8-point signals can be output. The number of pulses from 0 to 65,535 is counted. The count value is reset to 0 after it reaches the maximum countable value set and the High-speed Counter Unit continues counting the number of pulses.	31
3	Preset Mode	Counter value is decremented beginning with a preset value whenever a counter input is turned ON. Both counters 1 and 2 have three external outputs that will be turned ON and OFF while the count is decremented and an external output that will be turned ON when the High-speed Counter Unit finishes counting down the number of pulses. A total of 20 values can be preset within a range of 1 to 8,388,607, any of which can be used with the High-speed Counter Unit in this mode.	33
4	Gate Mode	Counts the number of pulses within a range of –8,388,608 to 8,388,607 while control input IN1 is turned ON. The High-speed Counter Unit resets the count value at the rising edge of control input IN1. An external control input or an IR bit can be used as the control input.	36
5	Cumulative Gate Mode	Counts the number of pulses within a range of –8388,608 to 8,388,607 while control input IN2 is turned ON to accumulate the count value. The High-speed Counter Unit resets the count value at the rising edge of control input IN1. An external control input or an IR bit can be used as the control input.	37
6	Sampling Mode	Counts the number of pulses from the rising edge of control input IN1 within a range of –8,388,608 to 8,388,607 for a preset interval. An external control input or an IR bit can be used as the control input.	37

The following pages provide information on data area allocation for value settings and functions of set values.

Note The High-speed Counter Unit in simple counter mode does not use any set value. For the data area allocation of the High-speed Counter Unit in simple counter mode, refer to *5-1 DM Area Allocation in Simple Counter Mode*.

4-2 DM and IR Bit Allocation

The following DM and IR bits are allocated to the Special I/O Unit for the C200H, C200HS, C200HX, C200HG, or C200HE PC.

DM Area

A block of 100 words between DM 1000 to DM 2599 is allocated to the Special I/O Unit.

The words allocated to the Special I/O Unit are within the following range.

Words m to m+99 (m = 1000 + 100 × Unit No. 0 to 15)

Upper and lower limits, output pattern, and other settings for each mode are stored in these words.

Note Unit numbers 10 to 15 (A to F) are available only when the C200HX, C200HG, or C200HE PC is used with the C200H-CT021.

IR Area

A block of 10 words between IR 100 to IR 199 or IR 400 to IR 459 is allocated to the Special I/O Unit.

The words allocated to the Special I/O Unit are within the following range.

Words n to n+9 (n = (100 + 10 × Unit No. 0 to 9) or (400 + 10 × (Unit No. – 10) (Unit No. 10 to 15))

Note Unit numbers 10 to 15 (A to F) are available only when the C200HX, C200HG, or C200HE is used with the C200H-CT021.

IR words n and n+1 are used for outputs from the PC to the Special I/O Unit and IR words n+2 to n+9 are used for inputs from the Special I/O Unit to the PC.

IR output words includes information to control the Special I/O Unit, such as Start, Stop, and Data Transfer commands.

The status data blocks of the Special I/O Unit, such as present counter value and operation data, are input to the PC from the input data area.

Data of 100 DM words is transferred to the Special I/O Unit when the Special I/O Unit is turned ON or restarted.

Data of 10 IR words and data from the Special I/O Unit are transferred at the time of the PC's I/O refresh.

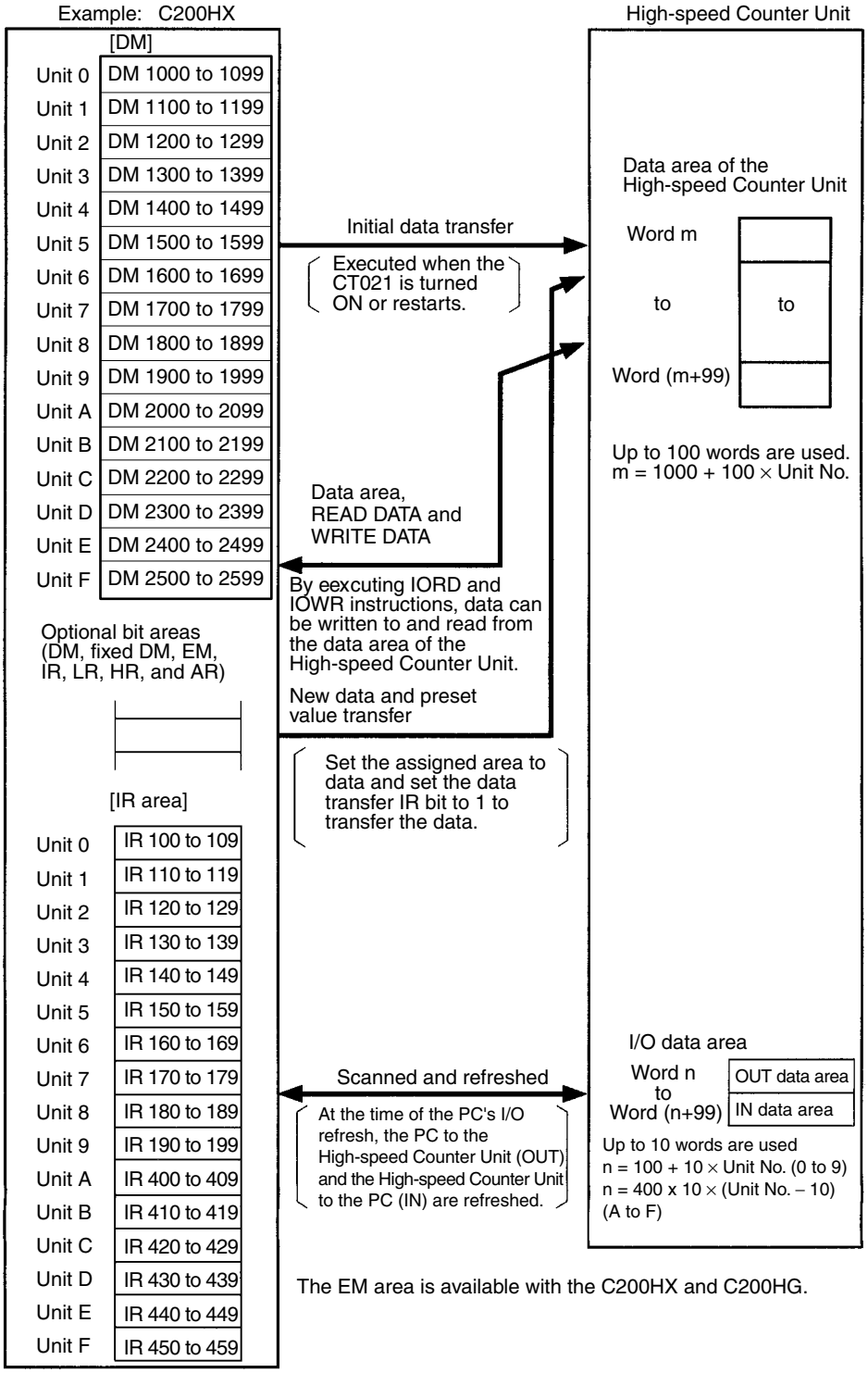

Note Refer to *4-11 Data Processing with PC* for I/O refresh and data transfer timing.

4-3 Linear Mode

A total of 16 ranges with upper and lower limits between –8,388,608 and 8,388,607 can be set in this mode and when the count value is within the ranges, the High-speed Counter Unit will turn an output ON.

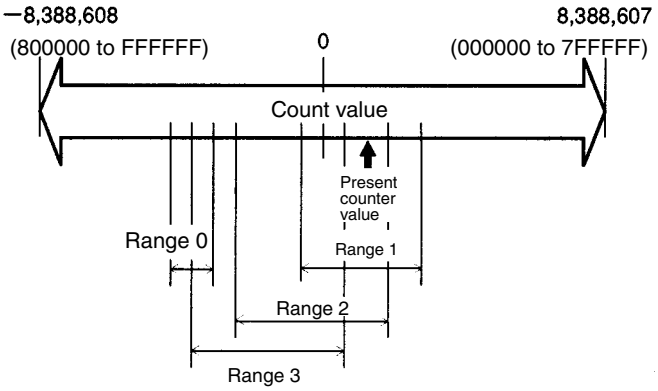

4-3-1 Operation Example

This example uses the following lower and upper limits with the outputs to be turned ON.

Range	Lower limit	Upper limit	Output (ON)
Range 0	–7,000	–5,000	3, 1
Range 1	–1,000	4,500	7, 6
Range 2	–4,000	3,000	6, 5
Range 3	–6,000	2,000	2, 1

If the present counter value is 3,000, outputs 7, 6, and 5 will be turned ON because the present counter value will be within ranges 1 and 2, in which case the OR of the outputs will be turned ON.

If the present counter value is –5,000, outputs 3, 2, and 1 will be turned ON because the present counter value will be within ranges 0 and 3.

In the case where ranges of counters 1 and 2 are different from each other, if the present counter value is within a range of counter 1 or 2, the OR of outputs corresponding to the range will be turned ON.

4-3-2 Configuration of Range

Note The configuration of the range in linear mode is briefly described in the following to explain the functions of the High-speed Counter Unit. Besides the settings described in this section, a variety of settings, such as operating mode, input type, and counter reset condition settings, are required. Refer to *5-2 DM Area Allocation in Linear and Circular Modes* for data area allocation in detail.

A range consists of lower and upper limits and output pattern, and uses five words. The lower limit uses two words, the upper limit uses two words, and the output pattern uses one word. Up to 16 ranges are available.

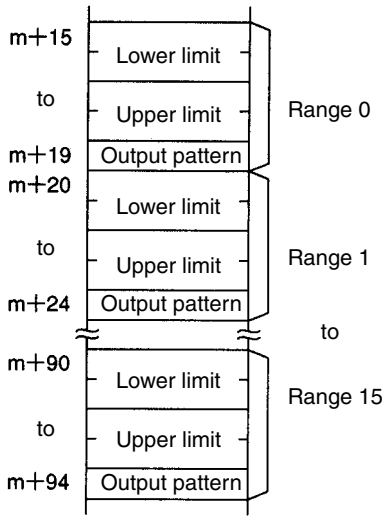

The upper and lower limits can be set within a range of –8,388,608 and 8,388,607.

The following is an example of range 0.

Lower Limit

BCD

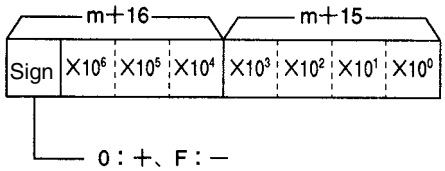

Range: –8,388,608 to 8,388,607

Hexadecimal

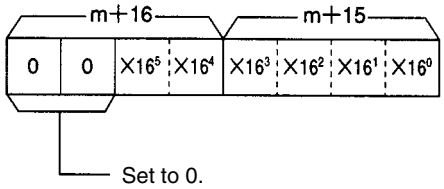

Range: 800000 to FFFFFF (–8,388,608 to –1) and 000000 to 7FFFFF (0 to 8,388,607)

Upper Limit

The configuration of the upper limit is the same as that of the lower limit. Replace word m+16 with m+18 and word m+15 with m+17.

Output Pattern

External outputs 7 to 0 correspond to the rightmost 8 bits (07 to 00) for the output pattern.

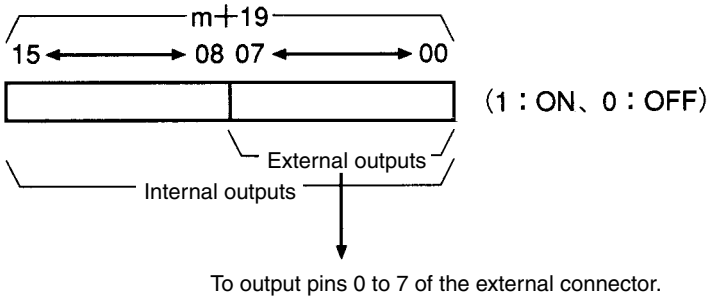

Both internal and external outputs or only eight internal outputs can be specified. The results of the outputs will be transferred to word n+9.

It is possible to preset 16 ranges, any of which can be chosen.

Ranges and external outputs can be enabled or disabled.

A maximum of three ranges and a present counter value can be changed by transferring data even when the High-speed Counter Unit is in operation.

Both upper and lower limits cannot be set to 8,388,607.

4-4 Circular Mode

The High-speed Counter Units in this mode counts the number of pulses within a range of 0 to 65,535. The count value is reset to 0 after it reaches the maximum countable value set and the High-speed Counter Unit continues counting the number of pulses. A total of 16 ranges with upper and lower limits can be set and when the count value is within the ranges, the High-speed Counter Unit will turn an output ON.

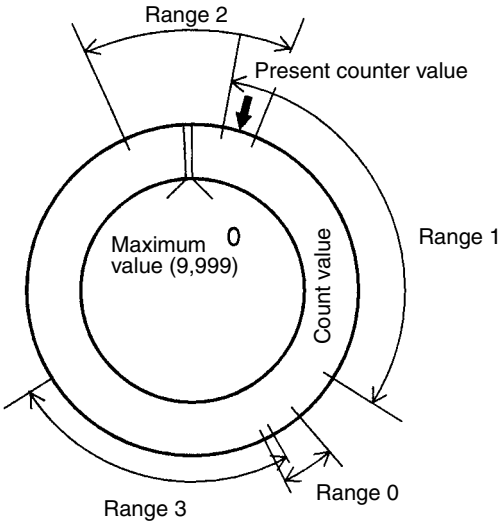

The example below uses the following lower and upper limits with the outputs to be turned ON.

Range	Lower limit	Upper limit	Output (ON)
Range 0	4,000	4,500	3, 1
Range 1	200	3,000	7, 6
Range 2	9,000	1,000	6, 5
Range 3	4,300	7,000	2, 1

If the present counter value is 600, outputs 7, 6, and 5 will be turned ON because the present counter value is within ranges 1 and 2, in which case the OR of the outputs will be turned ON.

If the present counter value is 4,500, outputs 3, 2, and 1 will be turned ON because the present counter value is within ranges 0 and 3.

In the case the ranges of counters 1 and 2 are different from each other, if the present counter value is within a range of counter 1 or 2, the OR of outputs corresponding to the range will be turned ON.

4-4-1 Configuration of Range

Note The configuration of the range of the High-speed Counter Unit in circular mode is briefly described below to explain the functions of the High-speed Counter Unit. Besides the settings described in this section, a variety of settings, such as operating mode, input type, and counter reset condition settings, are required. Refer to *5-2 DM Area Allocation in Linear and Circular Modes* for data area allocation in detail.

Circular mode requires settings for the maximum count value of the High-speed Counter Unit. Except for the maximum count value, the configuration of the High-speed Counter Unit in circular mode is the same as that of the High-speed Counter Unit in linear mode.

The lower and upper limits use two words each and the output pattern uses one word. Up to 16 ranges are available.

Maximum Count Value

The maximum count value can be set to 1 to 65,535.

BCD

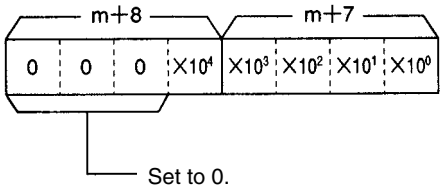

Set value: 1 to 65,535

Hexadecimal

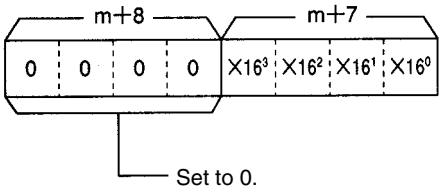

Set value: 0001 to FFFF

The above is an example of the maximum count value of counter 1.

Counter 2 uses words m+10 and m+9.

Note If the maximum count value is changed with the IOWR instruction, reset the count value to 0, otherwise the count value will not be reset to 0 after the count value reaches the new maximum count value.

Upper and Lower Limits and Output Pattern

Upper and lower limits can be within a range of 0 to the maximum count value set.

Outputs 7 to 0 correspond to the rightmost 8 bits (07 to 00) for the output pattern.

For the data configuration of the output pattern, refer to the output pattern in linear mode.

Both internal and external outputs or only eight internal outputs can be specified.

It is possible to preset 16 ranges, any of which can be enabled or disabled.

External outputs can be enabled or disabled.

A maximum of three ranges and a present counter value can be changed by transferring data even when the High-speed Counter Unit is in operation.

4-5 Preset Mode

Note The High-speed Counter Unit is in decrement counting operation in this mode. Therefore, sensor inputs such as encoder inputs to the High-speed Counter Unit must be in decrement mode.

The High-speed Counter Unit in this mode counts down the number of pulses whenever a counter input is turned ON beginning with a preset value. Both counters 1 and 2 have three external outputs that will be turned ON and OFF while the count is being decremented and an external output that will be turned ON when the High-speed Counter Unit finishes counting the number of pulses.

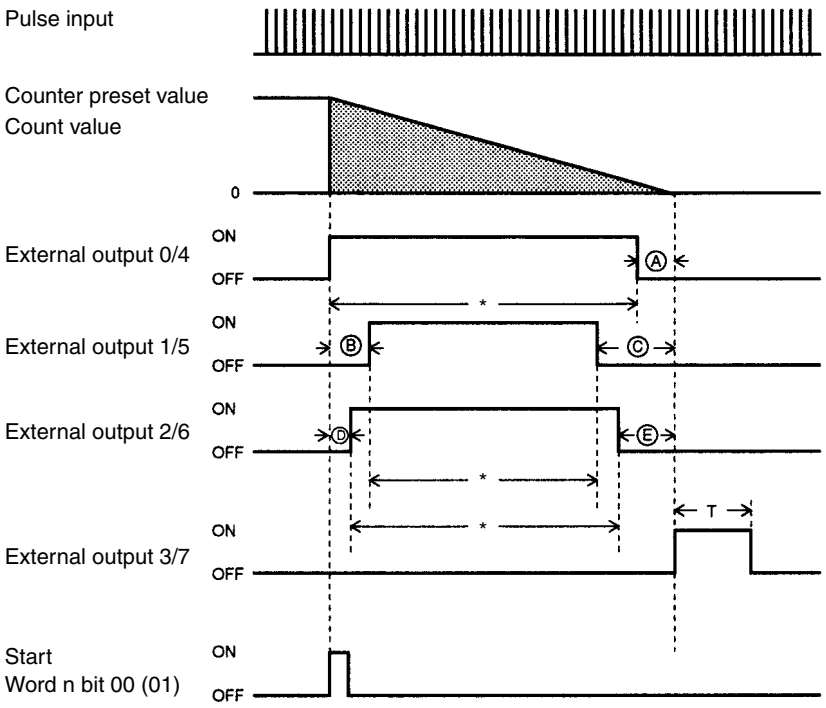

External outputs 0 to 3 are for counter 1 and external outputs 4 to 7 are for counter 2.

Bit 01 is a flag of counter 2.

In the above chart, horizontal lines express count values for external outputs 0, 1, 2, 4, 5, and 6 and timing for external outputs 3 and 7.

Note An interval of 2 ms min. is required between the preset count values marked with asterisks in the above chart, otherwise no external output can be obtained normally.

4-5-1 External Output Pattern

External outputs 0 to 3 are for counter 1 and external outputs 4 to 7 are for counter 2.

Output	Output pattern
0/4	Turned ON when the counter starts and turned OFF at count value 0+A.
1, 2/5, 6	Turned ON at the counter preset value + B and the counter preset value + D and turned OFF at count values 0+C and 0+E.
3/7	Turned ON for a preset interval after the counter finishes operating. Always turned ON if the time is set to FFFF.

4-5-2 Count Range for Output Control

Mark	Meaning	Range
A	A count value turning external outputs 0 and 4 OFF.	0 to 8,388,607 (0 to 8,388,606 for count value A)
B, D	A count value turning external output 1 and 5 or 2 and 6 ON.	
C, E	A count value turning external output 1 and 5 or 2 and 6 OFF.	
T	Time to keep external outputs 3 and 7 turning ON.	0 to 99.99 s or always ON

4-5-3 Configuration of Range

Note The configuration of the range in preset mode is briefly described below to explain the functions of the High-speed Counter Unit. In addition to the settings described in this section, a variety of settings, such as operating mode, input type, and counter reset condition settings, are required. Refer to *5-3 DM Area Allocation in Preset Mode Mode* for data area allocation in detail.

Count Values for Output Control

Words m+10 to m+20 are for counter 1 and words m+30 to m+40 are for counter 2. Count values can be set within a range of 0 to 8,388,607.

Values in parentheses are for counter 2 in the following diagram.

m+10 (m+30)	External output 0 (4)
m+11 (m+31)	OFF count value
	External output 1 (5)
	ON count value
	External output 1 (5)
to	OFF count value
	External output 2 (6)
	ON count value
m+18 (m+38)	External output 2 (6)
m+19 (m+39)	OFF count value
m+20 (m+40)	Time to keep external output 3 (7) from turning ON

Example 1: OFF Count Value of External Output 1

BCD

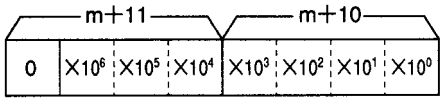

Set value: 0 to 8,388,607
(0 to 8,388,606 for external output 0 (4))

Hexadecimal

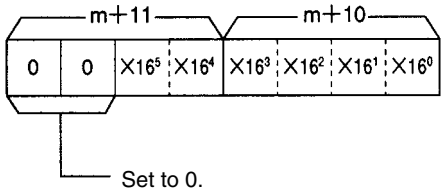

Set value: 000000 to 7FFFFF
(0 to 7FFFFE for external output 0 (4))

There is no difference in configuration among count values for external outputs 0, 2, 4, 5, and 6.

Example 2: ON Time of External Output 3

External output 3 will be kept ON until the counter starts again if the time is set to FFFF.

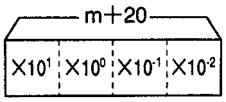

Set value: 0 to 9999 (0 to 99.99 s)
Unit: 0.01 s

Counter Preset Values

The maximum number of counter preset values is 20 within a range of 1 to 8,388,607, any of which can be chosen.

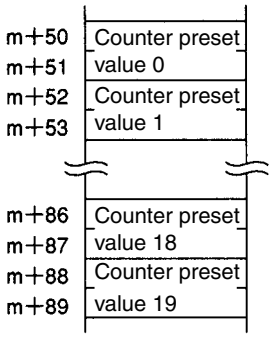

Example: Counter Preset Value 0

BCD

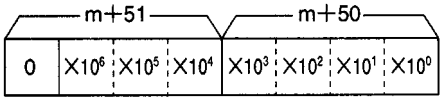

Set value: 1 to 8,388,607

Hexadecimal

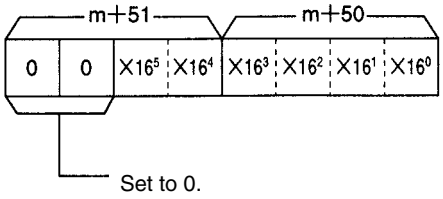

Set value: 000001 to 7FFFFF

A maximum of six counter preset values can be changed by transferring data from the PC, in which case data blocks A to E and T for turning the outputs ON and OFF must be preset. These data blocks cannot be changed by transferring data from the PC. The C200HX, C200HG, and C200HE PCs can use the IOWR instruction to change the data blocks.

Note Refer to *SECTION 10 Using IORD and IOWR Instructions* for the IOWR instruction in detail.

4-6 Gate Mode

The High-speed Counter Unit in this mode counts the number of pulses within a range of –8,388,608 to 8,388,607 while control input IN1 is turned ON. The count value is reset at the rising edge of control input IN1. An external control input or an IR bit can be used as the control input.

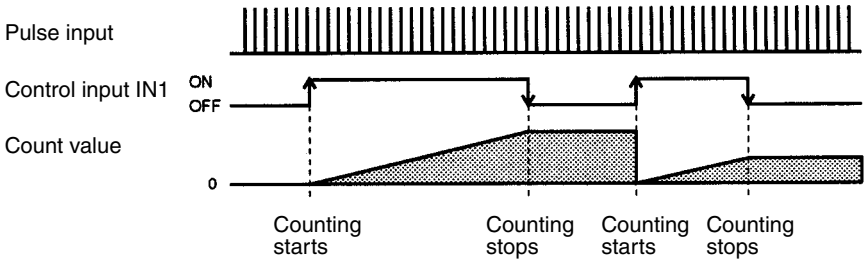

In this mode, the present counter value will start counting from 0 when control input IN1 is turned ON and stops counting the present counter value at the falling edge of IN1. The count value will be kept on hold until control input IN1 is ON again.

The High-speed Counter Unit in this mode does not have any external output.

4-7 Cumulative Gate Mode

The High-speed Counter Unit in this mode counts the number of pulses within a range of –8388,608 to 8,388,607 while control input IN2 is turned ON to accumulate the count value.

The count value is reset at the rising edge of control input IN1. An external control input or an IR bit can be used as the control input.

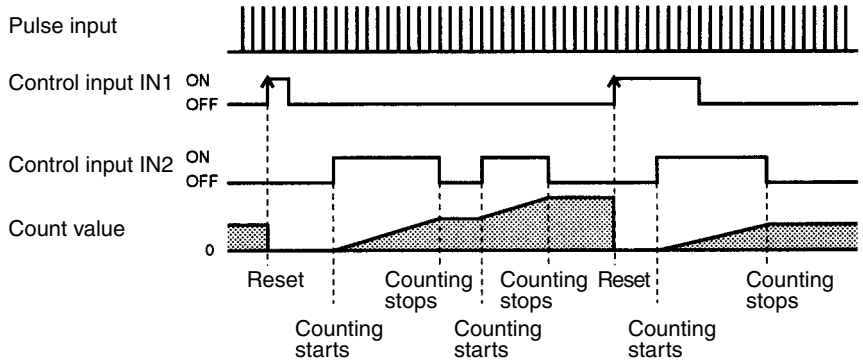

In this mode, the count value will be reset when control input IN1 is turned ON.

The High-speed Counter Unit counts the number of pulses while control input IN2 is ON. The count value will be kept on hold while IN2 is OFF. The count value is accumulated whenever control input IN2 is ON.

The High-speed Counter Unit in this mode does not have any external output.

4-8 Sampling Mode

The High-speed Counter Unit in this mode counts the number of pulses between for a preset interval. The High-speed Counter starts counting the number of pulses from the rising edge of the control input IN1 within a range of –8,388,608 to 8,388,607. An external control input or an IR bit can be used as the control input.

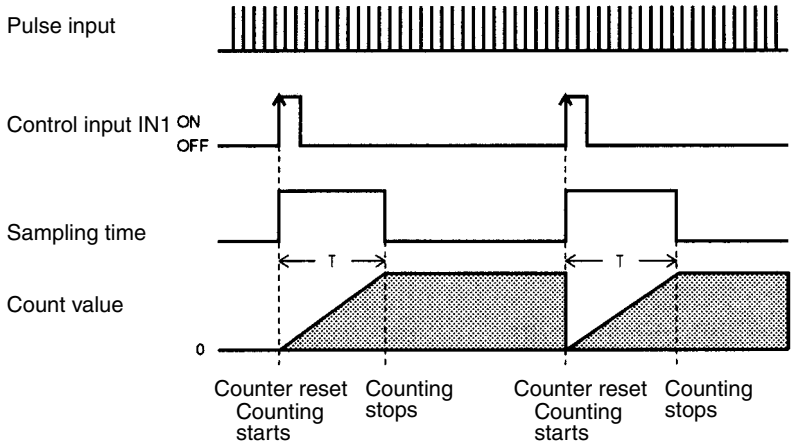

In this mode, the number of pulses will start counting from 0 when control input IN1 is turned ON and the timer for a preset sampling time will be turned ON at the same time. When the time is up, the High-speed Counter Unit will stop counting the number of pulses and keep the count value on hold.

The High-speed Counter Unit resets the count value at the rising edge of control input IN1 and starts counting the number of pulses for a preset sampling time.

The High-speed Counter Unit in this mode does not have any external output.

4-8-1 Configuration of Sampling Time

Note The configuration in sampling mode is briefly described below to explain the functions of the High-speed Counter Unit. In addition to the settings described in this section, a variety of settings, such as operating mode, input type, and control condition settings, are required. Refer to *5-4 DM Area Allocation in Gate, Cumulative Gate, and Sampling Modes* for data area allocation in detail.

Sampling Time

A sampling time can be set within a range of 1 to 9,999 ms.

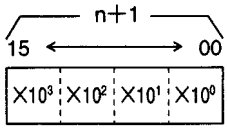

Set value: 0001 to 9999 ms
Unit: 1 ms

4-9 Input Types

Any one of the following types of inputs can be selected for the High-speed Counter Unit.

- Offset phase inputs
- Up and down pulse inputs
- Pulse and direction inputs

The High-speed Counter Unit has a function to multiply offset phase inputs by two or four. The resolution can be increased in proportion to the number of pulses input from encoders.

Input types are set with bits 00 to 03 of words m+1 and m+2.

Word m+1 is for counter 1 and word m+2 is for counter 2.

Input Type:
Counter 1 Example

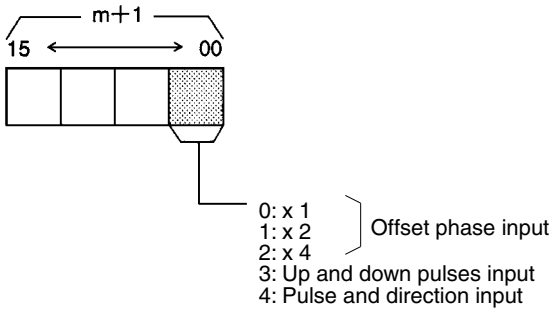

The type of input to counter 2 is set with word m+2.

Offset Phase Inputs

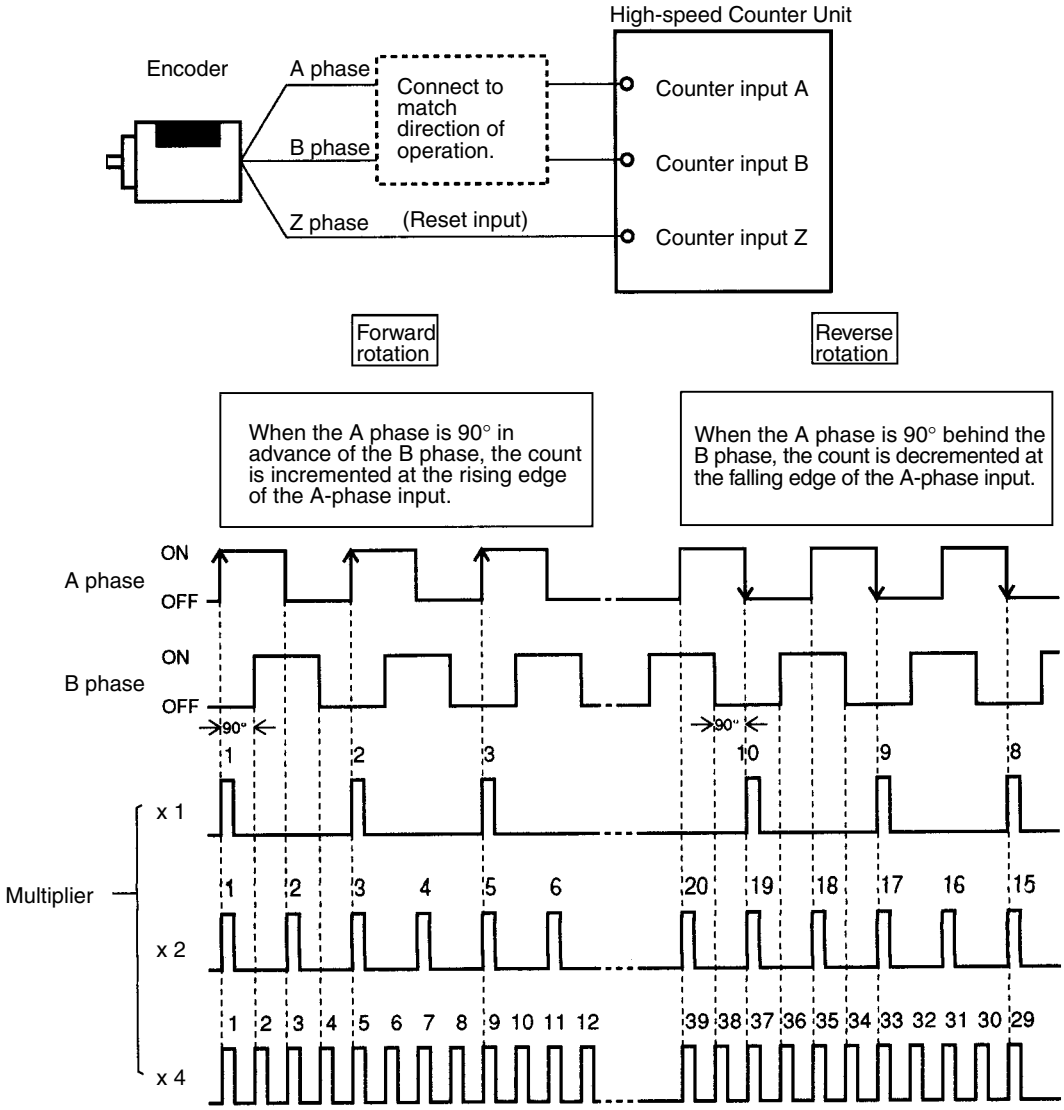

Note A counter can be reset with a Z-phase input from the encoder. Refer to *4-10 Counter Reset Conditions*.

Up and Down Pulse Inputs

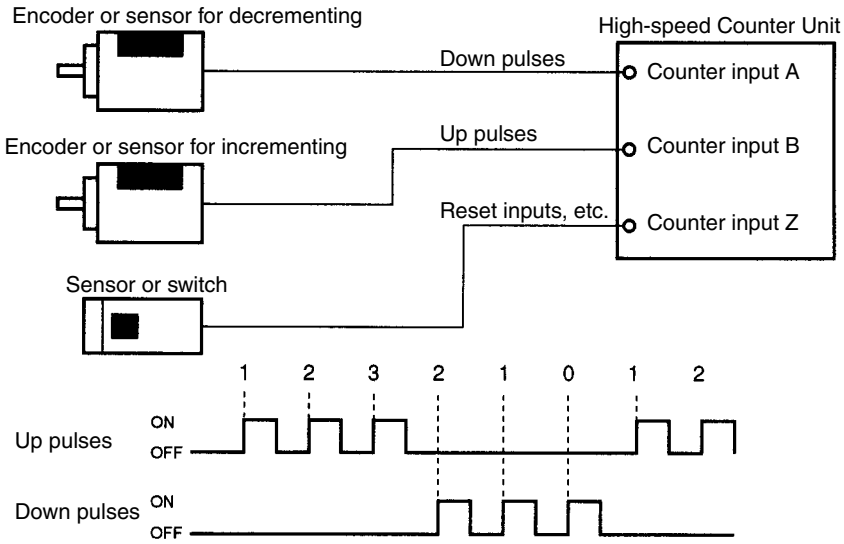

The High-speed Counter Unit counts up and down pulse inputs when the pulses are turned ON.

Note A counter can be reset with a Z-phase input from the encoder. Refer to *4-10 Counter Reset Conditions*.

Pulse and Direction Inputs

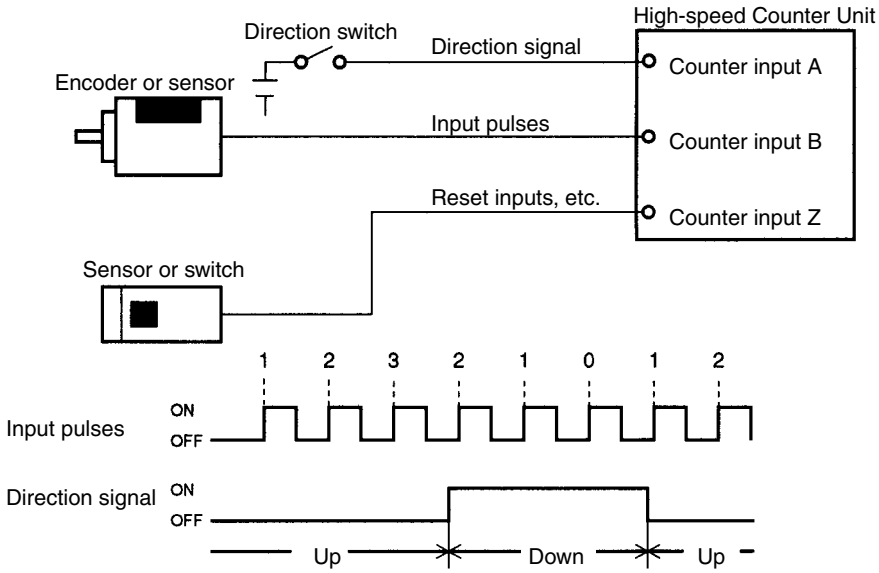

Counter input A is used as a direction signal. The High-speed Counter Unit will be in decrement operation when the direction signal is ON and in increment operation when the direction signal is OFF.

The High-speed Counter Unit counts pulses when the pulses are turned ON.

Note A counter can be reset with a Z-phase input from the encoder. Refer to *4-10 Counter Reset Conditions*.

4-10 Counter Reset Conditions

The count value can be reset with the internal Reset Bit, external control input IN1, and counter input Z. There are 12 counter reset modes as shown in the following table. Counter reset modes are set with bits 08 to 15 of words m+1 and m+2.
Word m+1 is for counter 1 and word m+2 is for counter 2.

Counter Reset Mode

Counter 1 Example

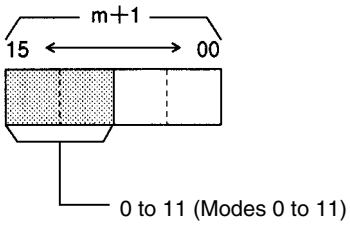

Abbreviations Used in Table

I: Internal Reset Bit
E: External control input IN1
Z: Counter input Z
1 to 11: Counter reset modes

In the following table, when two or more conditions are combined, they are treated as a logical AND. For example "Z, $\overline{E}$, I" means that the count value will be reset when counter input Z is H, external control input IN1 is L, and internal Reset Bit is 1.

Input	Counter reset condition and timing	
Internal Reset Bit	0	1
	(I) Reset (I)	Not reset
Counter input Z + external control input IN1 + internal Reset Bit	2	3
	(Z) (E) (I) Reset (Z) · (E) · (I)	(Z) (E) (I) Reset (Z) · (E) · (I)
Counter input Z + external control input IN1	4	5
	(Z) (E) Reset (Z) · (E)	(Z) (E) Reset (Z) · (E)
Counter input Z + internal Reset Bit	6	7
	(Z) (I) Reset (Z) · (I)	(Z) Reset (Z)
External control input IN1 + internal Reset Bit	8	9
	(E) (I) Reset (E) · (I)	(E) (I) Reset ($\overline{E}$) · (I)

Input	Counter reset condition and timing	
External control input IN1	10	11
	(E) Reset (E)	(E) Reset ($\overline{E}$)

Note

1. The width of a pulse of counter input Z and that of external control input IN1 must be 0.1 ms min.
2. When the High-speed Counter Unit in counter reset operation uses counter input Z or external control input IN1, the input repetition frequency of counter input Z or external control input IN1 must be 500 cps max.

4-11 Data Processing with PC

This section provides the data transfer timing of the High-speed Counter Unit and the execution cycle of the PC.

Execution Cycle of PC

The PC processes the following within a cycle time.

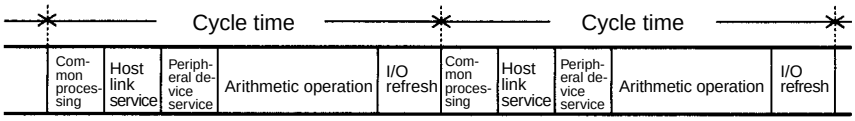

Data Exchange with PC

The High-speed Counter Unit exchanges I/O area information with the PC with every I/O refresh.

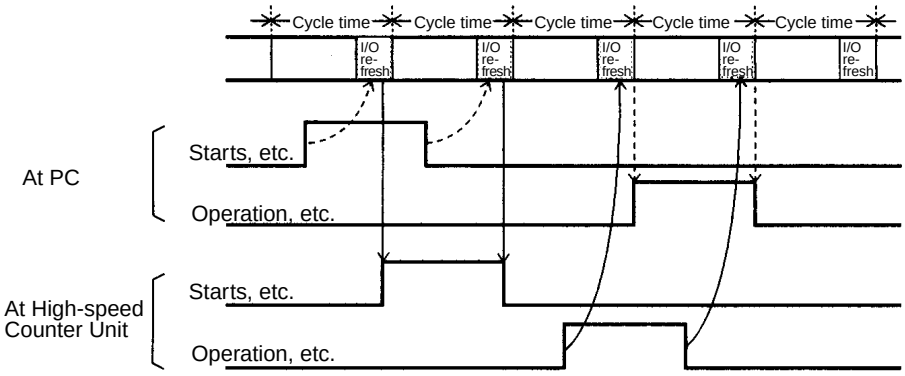

The data transfer completion bit will be turned ON or OFF whenever data is transferred.

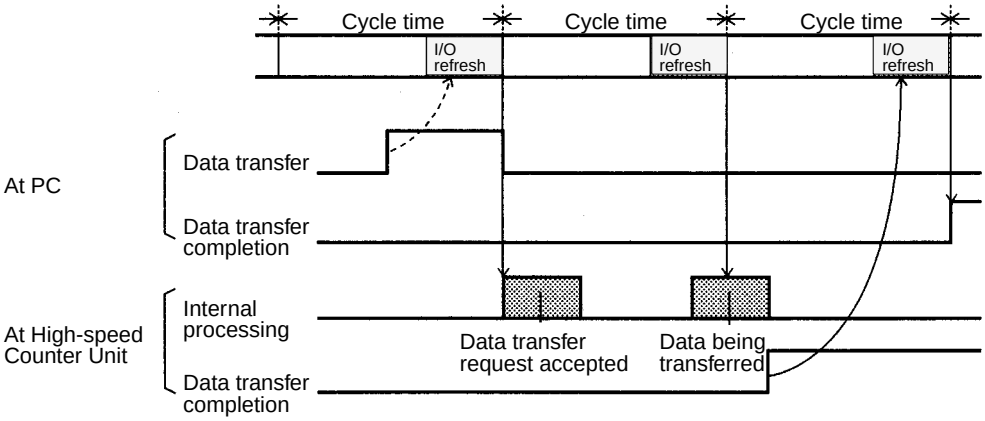

Note When the High-speed Counter Unit is mounted to a Slave Rack, there may be a data transfer delay between the Master and the Slave. Refer to *C200H PCs Operation Manual* for details.

SECTION 5
DM Area Allocation

This section provides information on the DM and IR bit allocation in each mode.

5-1 DM Area Allocation in Simple Counter Mode 46
5-2 DM Area Allocation in Linear and Circular Modes. 48
5-3 DM Area Allocation in Preset Mode 54
5-4 DM Area Allocation in Gate, Cumulative Gate, and Sampling Modes 60

5-1 DM Area Allocation in Simple Counter Mode

The following explains DM and IR bit allocation in simple counter mode.

DM Allocation

Word	Bit	Function
m	00 to 03	Operating mode (0: Simple counter mode)
	04 to 07	Not used.
	08 to 11	Not used.
	12 to 15	Present counter value mode (0: BCD; 1: Hexadecimal)
m+1 to m+99		Not used.

Note The Unit in simple counter mode will accept offset phase inputs and the reset mode will be set to 0.
The Unit will be in counting operation after the Unit is initialized.

IR Bit Allocation

Word (output)	Bit	Flag	Function
n	00	STOP Both Counters Command	Unit starts operating when this bit is OFF and stops operating when this bit is ON.
	01 to 03	---	Not used.
	04	RESET Counter 1 Command	Counter 1 reset at the rising edge of this bit. Refer to *4-10 Counter Reset Conditions*.
	05	RESET Counter 2 Command	Counter 2 reset at the rising edge of this bit. Refer to *4-10 Counter Reset Conditions*.
	06	READ ERROR command	Error codes are read at the rising edge of this bit. When this bit is ON while the Error Flag (word n+6 bit 15) is 1, error codes will be output to word n+7. The error code will be set to 0 when the last error code is read. Repeatedly turn this bit ON until the error code is set to 0. The Error Flag is set to 1 while there is any error code. To reset the Error Flag, use the control code “EC” of the IOWR instruction. Refer to *11-1 Error Processing*.
	07 to 15	---	Not used.
n+1	00 to 15	---	Not used.

Word (input)	Bit		Flag	Function
n+2, n+3	00 to 15		Present Counter 1 Value	BCD 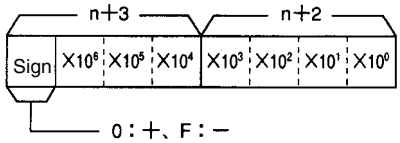 Stored data range: –8,388,608 to 8,388,607 Hexadecimal 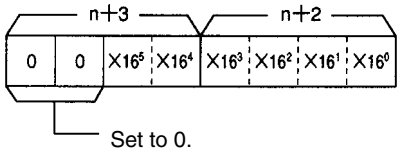 Stored data range: 800000 to FFFFFF (–8,388,608 to –1) and 000000 to 7FFFFF (0 to 8,388,607)
n+4, n+5	00 to 15		Present Counter 2 Value	Refer to the information on the above present counter 1 value.
n+6	00	Counter 1	Counting	Set to 1 when the counter is counting.
	01		Input Z	Indicates the status of input Z (1: H; 0: L)
	02		Control Input IN1	Indicates the status of control input IN1 (1: H; 0: L)
	03		Control Input IN2	Indicates the status of control input IN2 (1: H; 0: L)
	04		Counter Overflow	Set to 1 when the count value is not within a range of –8,388,608 to 8,388,607. Reset the counter when set to 1.
	05		Reset	Set to 1 during a scan of the PC after the counter is reset.
	06		Counter Operating	Set to 1 while either of the counters is counting.
	07		Unit Busy	Set to 1 while the IOWR instruction is processed for the C200HX, C200HG, or C200HE PC or the Unit is initialized.
	08	Counter 2	Counting	Refer to the information on the above counter 1
	09		Input Z	
	10		Control Input IN1	
	11		Control Input IN2	
	12		Counter Overflow	
	13		Reset	
	14		Data Transfer Completion	Set to 0 from 1 or vice versa when the Unit has completed processing the IOWR instruction.
	15		Error	Set to 1 when an error results. The error code and error location will be output to word n+7 by setting the READ ERROR Command to 1.
n+7	00 to 15		Error Data	An error code and error location are output in the following format. 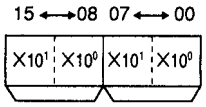 Error code Error location Two rightmost DM digits are indicated. Refer to *SECTION 11 Error Processing and Troubleshooting*.
n+8	00 to 15		---	Not used.
n+9	00 to 15		---	Not used.

5-2 DM Area Allocation in Linear and Circular Modes

The section explains DM and IR bit allocation in linear and circular modes.

DM Allocation

Word	Bit	Function
m	00 to 03	Operating mode (1: Linear mode; 2: Circular mode)
	04 to 07	Forced external output setting (0: Disabled; 1: Enabled)
	08 to 11	External output (0: NPN; 1:PNP)
	12 to 15	Counter values and ranges (0: BCD; 1: Hexadecimal)
m+1	00 to 03	Counter 1 input types and counter reset conditions: Input types 0: x 1 1: x 2 2: x 4 Offset phase inputs (counter 1) 3: Up and down pulses input 4: Pulse and direction input
	04 to 07	Not used.
	08 to 15	Reset modes 00 to 11 (Mode 0 to mode 11)
m+2	00 to 15	Counter 2 input types and counter reset conditions: Refer to the information on counter 1 input types and counter reset conditions.
m+3	00 to 15	First word number of PC storing transfer data and number of transfer data blocks Transfer data can be stored in consecutive words in a data area of the PC, which can be used to change the upper and lower limits of the count value and present counter value of the Unit. A transfer data block uses six words. Three transfer data blocks (i.e., 18-word data) can be transferred to change the upper and lower limits of the count value. On the other hand, a transfer data block (i.e., 6-word data) can be transferred to change the present counter value. Be sure to create PC data in consecutive words in the same area.

Word	Bit	Function
m+4	00 to 03	PC data area (0: DM; 1: I/O; 2: LR; 3: HR; 4:AR; 5: EM)
	04 to 07	Not used.
	08 to 15	Number of transfer data blocks (01 to 03)

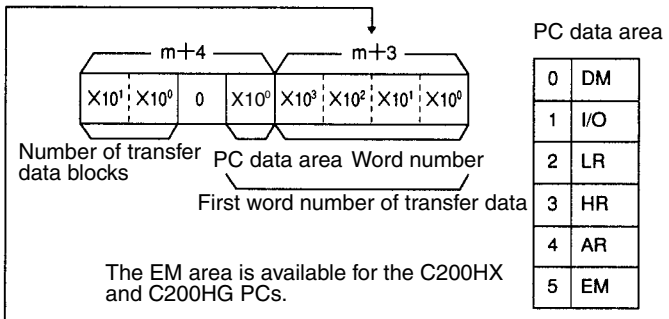

The following is the data configuration to transfer upper and lower limits from a data area of the PC.

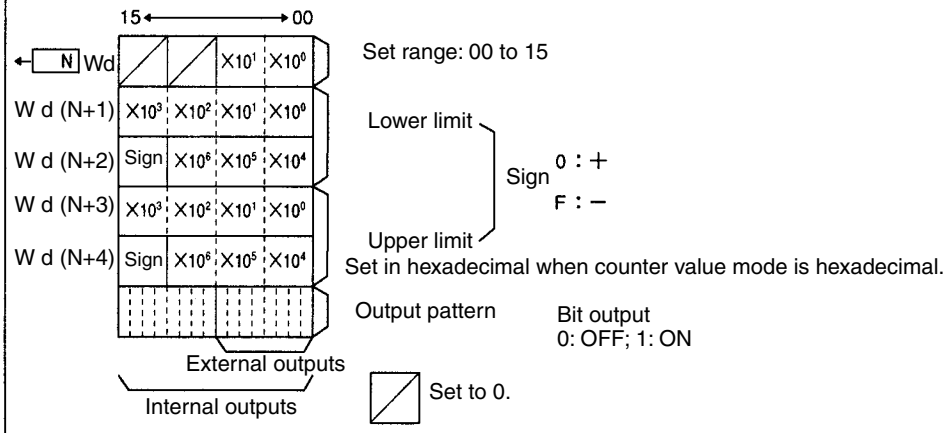

N: First word number set with PC

The following is the data configuration to transfer counter values from a data area of the PC.

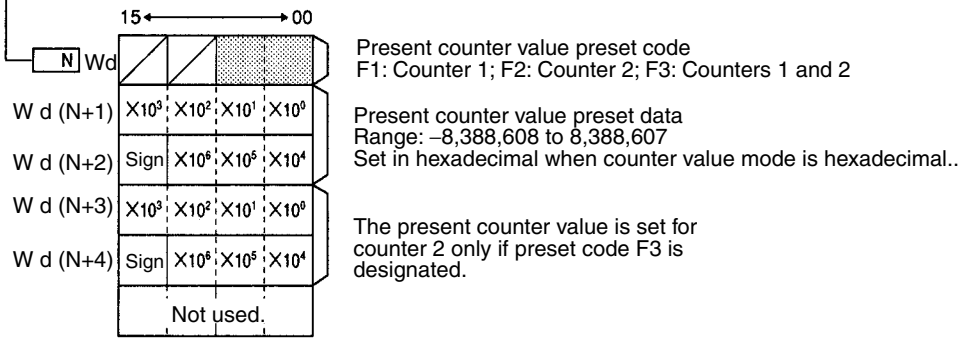

N: First word number set with PC

Set the number of transfer data blocks to 01 to transfer the present counter value.
If the number of transfer data blocks is set to 02, set the first word of the transfer data blocks to the present counter value, in which case, the succeeding data blocks will be ignored.

Transfer the error clear code "EC" to reset the Error Flag.

m+5	00 to 15	Ranges assigned to counter 1 (1: Enabled; 0: Disabled) Bits 00 to 15 correspond to ranges 0 to 15.

Word	Bit	Function
m+6	00 to 15	Ranges assigned to counter 2 (1: Enabled; 0: Disabled) Bits 00 to 15 correspond to ranges 0 to 15.
m+7, m+8	00 to 15	Max. count value of counter 1 (in circular mode only) BCD 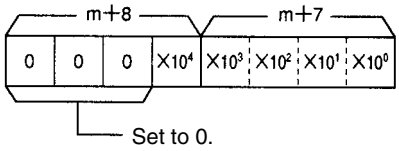 Range: 1 to 65,535 Hexadecimal 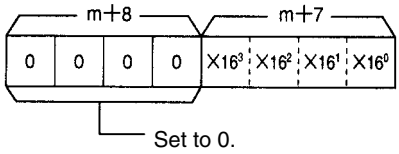 Range: 0001 to FFFF In the above example, the maximum value of counter 1 is specified. Words m+10 and m+9 are used for counter 2.
m+9, m+10	00 to 15	Max. count value of counter 2 (in circular mode only)
m+11, m+14	---	Not used.
m+15, m+16	00 to 15	Lower limit of range 0 BCD 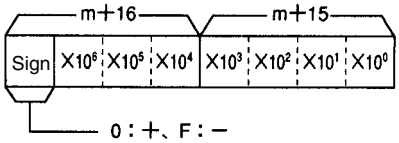 Range: –8,388,608 to 8,388,607 Hexadecimal 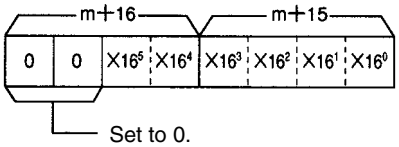 Range: 800000 to FFFFFF (–8,388,608 to –1) and 000000 to 7FFFFF (0 to 8,388,607)
m+17, m+18	00 to 15	Upper limit of range 0 BCD 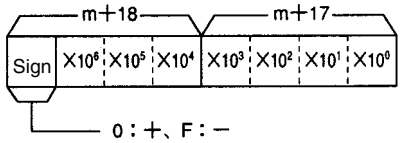 Range: –8,388,608 to 8,388,607 Hexadecimal 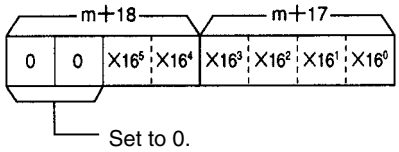 Range 800000 to FFFFFF (–8,388,608 to –1) and 000000 to 7FFFFF (0 to 8,388,607)

Word	Bit	Function
m+19	00 to 15	Output pattern of range 0 (1: ON; 0: OFF) 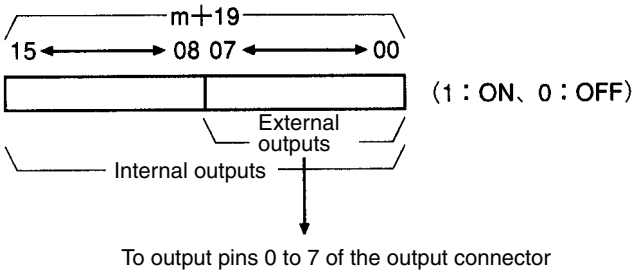 Set bits to 1 so that signals will be output from the bits when the count value is between the upper and lower limits. The internal outputs will be transferred to word n+9. The external outputs will be turned ON when word n bit 07 is set to 1.
m+20 to m+24		Output pattern and lower and upper limits of range 1 Refer to the information on the settings of range 0.
m+25 to m+29		Output pattern and lower and upper limits of range 2 Refer to the information on the settings of range 0.
m+30 to m+34		Output pattern and lower and upper limits of range 3 Refer to the information on the settings of range 0.
m+35 to m+39		Output pattern and lower and upper limits of range 4 Refer to the information on the settings of range 0.
m+40 to m+44		Output pattern and lower and upper limits of range 5 Refer to the information on the settings of range 0.
m+45 to m+49		Output pattern and lower and upper limits of range 6 Refer to the information on the settings of range 0.
m+50 to m+54		Output pattern and lower and upper limits of range 7 Refer to the information on the settings of range 0.
m+55 to m+59		Output pattern and lower and upper limits of range 8 Refer to the information on the settings of range 0.
m+60 to m+64		Output pattern and lower and upper limits of range 9 Refer to the information on the settings of range 0.
m+65 to m+69		Output pattern and lower and upper limits of range 10 Refer to the information on the settings of range 0.
m+70 to m+74		Output pattern and lower and upper limits of range 11 Refer to the information on the settings of range 0.
m+75 to m+79		Output pattern and lower and upper limits of range 12 Refer to the information on the settings of range 0.
m+80 to m+84		Output pattern and lower and upper limits of range 13 Refer to the information on the settings of range 0.
m+85 to m+89		Output pattern and lower and upper limits of range 14 Refer to the information on the settings of range 0.
m+90 to m+94		Output pattern and lower and upper limits of range 15 Refer to the information on the settings of range 0.
m+95 to m+99	---	Not used.

IR Bit Allocation

Word (output)	Bit	Flag	Function
n	00	Start/Stop Command	Unit starts counting at the rising edge of this bit. Unit stops counting at the falling edge of this bit. If the forced external output function is disabled at this time, the preset counter value and output pattern will be kept on hold.
	01	CHANGE RANGES Counter 1 Command	Sets counter 1 range to the data of word n+1 at the rising edge of this bit.
	02	CHANGE RANGES Counter 2 Command	Sets counter 2 range to the data of word n+1 at the rising edge of this bit.
	03	Data Transfer Command	Data is transferred from the PC according to the settings of words m+3 and m+4 at the rising edge of this bit.
	04	RESET Counter 1 Command	Resets counter 1 at the rising edge of this bit. Refer to *4-10 Counter Reset Conditions*.
	05	RESET Counter 2 Command	Refer to the information on the above counter 1 reset.
	06	READ ERROR Command	Unit reads error codes at the rising edge of this bit. When this bit is ON while the Error Flag (word n+6 bit 15) is 1, error codes will be output to word n+7. The error code will be 0 when the last error code is read. Repeatedly turn this bit ON until the error code is set to 0. The Error Flag will still be 1 after the last error code is read. To reset the Error Flag, use the control code “EC” after correcting the error. Refer to *11-1 Error Processing*.
	07	ENABLE External Output Command	External outputs 0 to 7 will be enabled if this bit is set to 1. Data is transferred to word n+9 regardless of the setting of this bit.
	08 to 15	Forced External Outputs 0 to 7	External outputs 0 to 7 will be turned ON if these bits are set to 1 when the forced output function is enabled. (DM m bits 04 to 07 = 1) Bits 08 to 15 correspond to external outputs 0 to 7. Set the forced external outputs to Enabled. Use these bits to check wiring. Set the forced external outputs to 1:Enabled, bit 07 to 1, and bit 00 to 0 to use this function.
n+1	00 to 15	Ranges Enable Bit 0 to 15	Bits 00 to 15 corresponds to ranges 0 to 15. When these bits are set to 1, the corresponding ranges will be enabled.

Word (input)	Bit		Flag	Function
n+2, n+3	00 to 15		Present Counter 1 Value	BCD 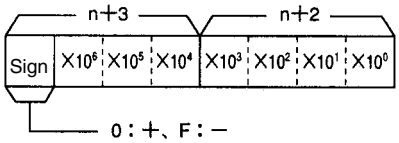 Stored data range: –8,388,608 to 8,388,607 Hexadecimal 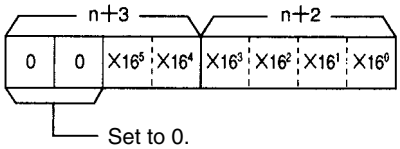 Stored data range: 800000 to FFFFFF (–8,388,608 to –1) and 000000 to 7FFFFF (0 to 8,388,607)
n+4, n+5	00 to 15		Present Counter 2 Value	Refer to the information on the above present counter 1 value.
n+6	00	Counter 1	Counting	Set to 1 when the counter is counting.
	01		Input Z	Indicates the status of input Z (1: H; 0: L)
	02		Control Input IN1	Indicates the status of control input IN1 (1: H; 0: L)
	03		Control Input IN2	Indicates the status of control input IN2 (1: H; 0: L)
	04		Counter Overflow	Set to 1 when the count value is not within a range of –8,388,608 to 8,388,607. Reset the counter when set to 1.
	05		Reset	Set to 1 during a scan of the PC after the counter is reset.
	06		Counter Operating	Set to 1 while either of the counters is counting.
	07		Unit Busy	Set to 1 while data transfer is executed or the IOWR instruction is processed for the C200HX, C200HG, or C200HE PC or the Unit is initialized.
	08	Counter 2	Counting	Refer to the information on the above counter 1
	09		Input Z	
	10		Control Input IN1	
	11		Control Input IN2	
	12		Counter Overflow	
	13		Reset	
	14		Data Transfer Completion	Set to 0 from 1 or vice versa when the Unit has completed data transfer or processing the IOWR instruction.
	15		Error	Set to 1 when an error results. The error code and error location will be output to word n+7 by setting the READ ERROR Command to 1.
n+7	00 to 15		Error Data	An error code and error location are output in the following format. 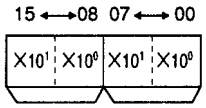 Error code Error location Two rightmost DM digits are indicated. Refer to *SECTION 11 Error Processing and Troubleshooting*.
n+8	00 to 15		Operating Range No.	Bits 00 to 15 correspond to ranges 0 to 15. One of these bits is ON when the present counter value of either of the counters is between the corresponding upper and lower limits.
n+9	00 to 07		Internal/External Outputs 0 to 7	Indicate the status of outputs. These bit numbers correspond to output numbers. A bit is set to 1 when the corresponding output is turned ON. These bits are set to 1 regardless of the setting of word n bit 07.
	08 to 15		Internal Outputs 8 to 15	

5-3 DM Area Allocation in Preset Mode

The section explains DM and IR bit allocation in preset mode.

DM Allocation

Word	Bit	Function
m	00 to 03	Operating mode (3: Preset mode)
	04 to 07	Forced external output setting (0: Disabled; 1: Enabled)
	08 to 11	External output (0: NPN; 1:PNP)
	12 to 15	Counter values and set values (0: BCD; 1: Hexadecimal)
m+1	00 to 03	Counter 1 input types and counter reset conditions: Input types 0: x 1 1: x 2 2: x 4 Offset phase inputs (counter 1) 3: Up and down pulses input 4: Pulse and direction input ‘
	04 to 07	Control mode (0: Internal input ; 1: External control input IN2)
	08 to 15	Reset modes 00 to 11 (Mode 0 to mode 11)
m+2	00 to 15	Counter 2 input types and counter reset conditions: Refer to the information on counter 1 input types and counter reset conditions.
m+3	00 to 15	First word number of PC storing transfer data and number of transfer data blocks Transfer data can be stored in consecutive words in a data area of the PC, which can be used to change the preset counter value of the Unit. Be sure to create the PC data in consecutive words in the same area. A transfer data block uses three words. Six transfer data blocks (i.e., 18-word data) can be transferred.

Word	Bit	Function
m+4	00 to 03	PC data area (0: DM; 1: I/O; 2: LR; 3: HR; 4:AR; 5: EM)
	04 to 07	Not used.
	08 to 15	Number of transfer data blocks (01 to 06) 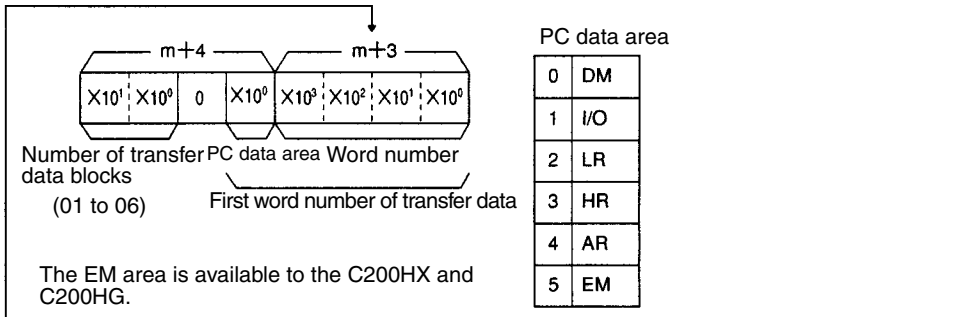 The EM area is available to the C200HX and C200HG. The following is the data configuration to transfer counter preset values from a data area of the PC. 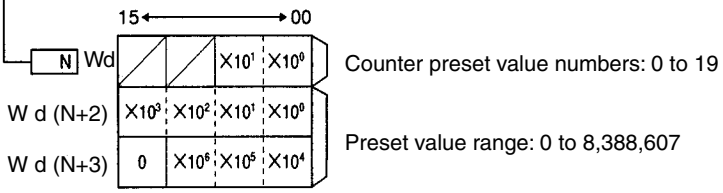 Counter preset value numbers: 0 to 19 Preset value range: 0 to 8,388,607 Set in hexadecimal when counter value mode is hexadecimal. Range: 000000 to 7FFFFF N: First word number set with PC Set to 0. Transfer the error clear code "EC" to reset the Error Flag. 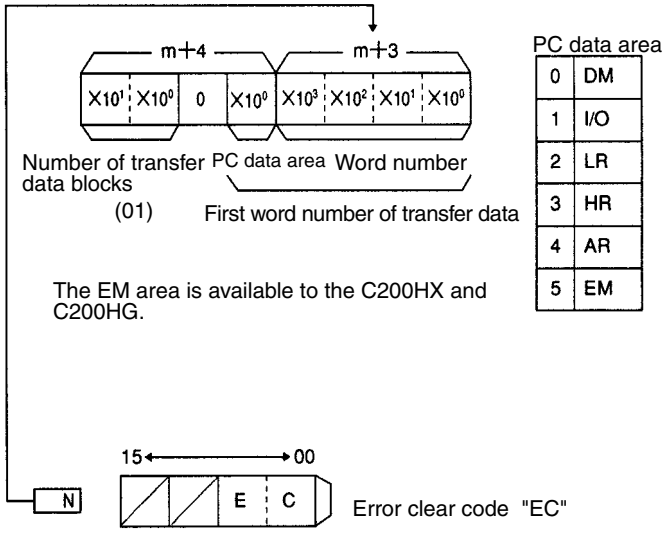 The EM area is available to the C200HX and C200HG. Error clear code "EC" N: First word number set with PC Set to 0.
m+5 to m+9	00 to 15	Not used.

Word	Bit		Function
m+10, m+11	00 to 15	Counter 1	OFF count value of external output 0 BCD 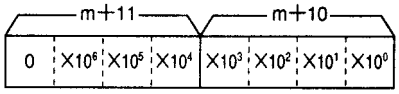 Range: 0 to 8,388,606 Hexadecimal 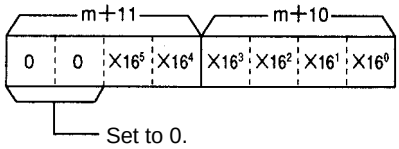 Range: 000000 to 7FFFFE
m+12, m+13	00 to 15		ON count value of external output 1 Range: 0 to 8,388,607 (000000 to 7FFFFF)
m+14, m+15	00 to 15		OFF count value of external output 1 Range: 0 to 8,388,607 (000000 to 7FFFFF)
m+16, m+17	00 to 15		ON count value of external output 2 Range: 0 to 8,388,607 (000000 to 7FFFFF)
m+18, m+19	00 to 15		OFF count value of external output 2 Range: 0 to 8,388,607 (000000 to 7FFFFF)
m+20	00 to 15		ON hold time of external output 3 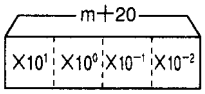 Range: 0000 to 9999 (0 to 99.99 s) Unit: 1 s The output will be kept on hold until the counter starts again if the word is set to FFFF.
m+21 to m+29	00 to 15		Not used.
m+30, m+31	00 to 15	Counter 2	OFF count value of external output 4 Range: 0 to 8,388,606 (000000 to 7FFFFE)
m+32, m+33	00 to 15		ON count value of external output 5 Range: 0 to 8,388,607 (000000 to 7FFFFF)
m+34, m+35	00 to 15		OFF count value of external output 5 Range: 0 to 8,388,607 (000000 to 7FFFFF)
m+36, m+37	00 to 15		ON count value of external output 6 Range: 0 to 8,388,607 (000000 to 7FFFFF)
m+38, m+39	00 to 15		OFF count value of external output 6 Range: 0 to 8,388,607 (000000 to 7FFFFF)
m+40	00 to 15		ON hold time of external output 7 Range: 0 to 9999 (0 to 99.99 s) Unit: 1 s The output will be kept on hold until the counter starts again if the word is set to FFFF.
m+41 to m+49	00 to 15		Not used.

Word	Bit	Function
m+50, m+51	00 to 15	Counter preset value 0 BCD 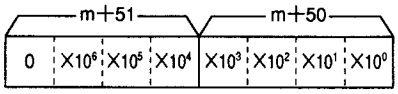 Range: 1 to 8,388,607 Hexadecimal 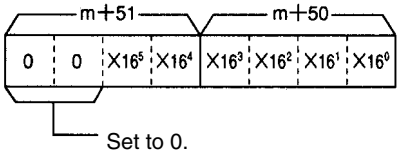 Range: 000001 to 7FFFFF
m+52, m+53	00 to 15	Counter preset value 1
m+54, m+55	00 to 15	Counter preset value 2
m+56, m+57	00 to 15	Counter preset value 3
m+58, m+59	00 to 15	Counter preset value 4
m+60, m+61	00 to 15	Counter preset value 5
m+62, m+63	00 to 15	Counter preset value 6
m+64, m+65	00 to 15	Counter preset value 7
m+66, m+67	00 to 15	Counter preset value 8
m+68, m+69	00 to 15	Counter preset value 9
m+70, m+71	00 to 15	Counter preset value 10
m+72, m+73	00 to 15	Counter preset value 11
m+74, m+75	00 to 15	Counter preset value 12
m+76, m+77	00 to 15	Counter preset value 13
m+78, m+79	00 to 15	Counter preset value 14
m+80, m+81	00 to 15	Counter preset value 15
m+82, m+83	00 to 15	Counter preset value 16
m+84, m+85	00 to 15	Counter preset value 17
m+86, m+87	00 to 15	Counter preset value 18
m+88, m+89	00 to 15	Counter preset value 19
m+90 to m+99	00 to 15	Not used.

IR Bit Allocation

Word (output)	Bit	Flag	Function
n	00	START Counter 1 Command	Unit starts counting at the rising edge of this bit with the counter preset data of word n+1 if this bit is set to 1. Unit stops counting when word n bit 04 is set to 1 or the count value reaches 0.
	01	START Counter 2 Command	Refer to the information on the above START Counter 1.
	02	---	Not used.
	03	Data Transfer Command	Data is transferred from the PC according to the settings of DM words m+3 and m+4 at the rising edge of this bit.
	04	RESET Counter 1 Command	Resets counter 1 at the rising edge of this bit. Refer to *4-10 Counter Reset Conditions*.
	05	RESET Counter 2 Command	Refer to the information on the above RESET Counter 1.
n	06	READ ERROR Command	Unit reads error codes at the rising edge of this bit. When this bit is ON while the Error Flag (word n+6 bit 15) is 1, error codes will be output to word n+7. The error code will be 0 when the last error code is read. Repeatedly turn this bit ON until the error code is set to 0. The Error Flag will be still 1 after the last error code is read. To reset the Error Flag, use the control code “EC” after correcting the errors. Refer to *11-1 Error Processing*.
	07	ENABLE External Output Command	External outputs 0 to 7 will be enabled if this bit is set to 1. Data is transferred to word n+9 regardless of the setting of this bit.
	08 to 15	Forced External Outputs 0 to 7	External outputs 0 to 7 will be turned ON if these bits are set to 1. Bits 08 to 15 corresponds to outputs 0 to 7. Use these bits to check wiring. Set the forced external output to 1:Enabled, bit 07 to 1, and bits 00 and 01 to 0 to use this function.
n+1	00 to 15	Counter Preset Value No.	This designates the counter preset value (0 to 19) set in the words m+50 to m+89 used for counters 1 and 2. Set these within a range of 00 to 19. Bits 00 to 07 are for counter 1 and bits 08 to 15 are for counter 2. When the counters start, the counter preset values corresponding to the designated numbers are set in the counters. 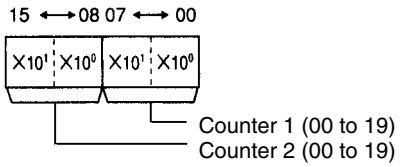
n+2, n+3	00 to 15	Present Counter 1 Value	BCD 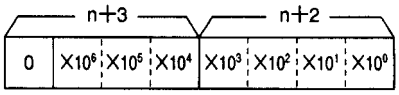 Stored data range: 0 to 8,388,607 Hexadecimal 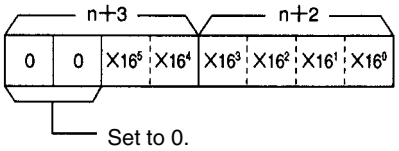 Stored data range: 000000 to 7FFFFF (0 to 8,388,607)

Word (input)	Bit		Flag	Function
n+4, n+5	00 to 15		Present Counter 2 Value	Refer to the information on the above present counter 1 value.
n+6	00	Counter 1	Counting	Set to 1 when the counter is counting.
	01		Input Z	Indicates the status of input Z (1: H; 0: L)
	02		Control Input IN1	Indicates the status of control input IN1 (1: H; 0: L)
	03		Control Input IN2	Indicates the status of control input IN2 (1: H; 0: L)
	04		Counter Overflow	Set to 1 when the count value exceeds 8,388,607. Reset the counter when this bit is set to 1.
	05		Reset	Set to 1 during a scan of the PC after the counter is reset.
	06		Counter Operating	Set to 1 while either of the counters is counting.
	07		Unit Busy	Set to 1 while data transfer is executed or the IOWR instruction is processed for the C200HX, C200HG, or C200HE PC or the Unit is initialized.
	08	Counter 2	Counting	Refer to the information on the above counter 1
	09		Input Z	
	10		Control Input IN1	
	11		Control Input IN2	
	12		Counter Overflow	
	13		Reset	
	14		Data Transfer Completion	Set to 0 from 1 or vice versa when the Unit has completed data transfer and processing the IOWR instruction.
	15		Error	Set to 1 when an error results. The error code and error location will be output to word n+7 by setting the Error Read Flag to 1.
n+7	00 to 15		Error Data	An error code and error location are output in the following format. 15 ⟷ 08 07 ⟷ 00 $\times 10^1$ $\times 10^0$ $\times 10^1$ $\times 10^0$ Error code Error location Two rightmost DM digits are indicated. Refer to *11-1 Error Processing*.
n+8	00 to 15		Currently Effective Counter Preset Value No.	The number of the counter preset value in use will be stored within a range of 00 to 19. Bits 00 to 07 are for counter 1 and bits 08 to 15 are for counter 2. 15 ⟷ 08 07 ⟷ 00 $\times 10^1$ $\times 10^0$ $\times 10^1$ $\times 10^0$ Counter 1 (00 to 19) Counter 2 (00 to 19)
n+9	00 to 07		Internal/External Outputs 0 to 7	Indicate the status of outputs. These bit numbers correspond to output numbers. A bit is set to 1 when the corresponding output is turned ON. These bits are set to 1 regardless of the setting of word n bit 07.
	08 to 15		---	Not used.

5-4 DM Area Allocation in Gate, Cumulative Gate, and Sampling Modes

The section explains DM and IR bit allocation in gate, cumulative gate, and sampling modes.

DM Allocation

Word	Bit	Function
m	00 to 03	Operating mode (4: Gate mode; 5: Cumulative gate mode; 6: Sampling mode)
	04 to 07	Not used.
	08 to 11	Not used.
	12 to 15	Counter value (0: BCD; 1: Hexadecimal)
m+1	00 to 03	Counter 1 input types and control mode: Input types 0: x 1 1: x 2 2: x 4 Offset phase inputs (counter 1) 3: Up and down pulses input 4: Pulse and direction input
	04 to 07	Counter 1 control mode Set control inputs IN1 and IN2 to external control inputs IN1 and IN2 or internal control inputs IN1 and IN2. The following bits are used for the internal control inputs. Word n bit 08: Internal control IN1 Word n bit 09: Internal control IN2 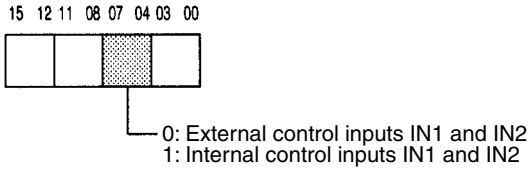 0: External inputs (connector inputs) 1: Internal inputs (data area inputs)
	08 to 15	Not used.
m+2	00 to 15	Counter 2 input types and control mode: Input types Refer to the information on counter 1 input types and control mode. Counter 2 control mode The following bits are used for the internal control inputs. Word n bit 10: Internal control IN1 Word n bit 11: Internal control IN2
m+3 to m+99	00 to 15	Not used.

IR Bit Allocation

Word (output)	Bit	Flag	Function
n	00	---	Not used.
	01	SET TIME for Counter 1 Command	(The sampling time of word n+1 will be set only in sampling mode.) The sampling time for n+1 word is set at the rising edge. The new sampling time will be valid after the counter completes counting if the new sampling time is set while the counter is counting.
	02	SET TIME for Counter 2 Command	(This function is valid in sampling mode only.) Refer to the information on the above SET TIME for counter 1.
	03 to 05	---	Not used.
	06	READ ERROR Command	Reads error codes at the rising edge of this bit. When this bit is ON while the Error Flag (word n+6 bit 15) is 1, error codes will be output to word n+7. The error code will be 0 when the last error code is read. Repeatedly turn this bit ON until the error code is set to 0. The Error Flag will be still 1 after the last error code is read. To reset the Error Flag, use the control code “EC” of the IOWR instruction after correcting the errors. Refer to *11-1 Error Processing*.
	07	---	Not used.
	08	Counter 1 Internal Control IN1	Specify internal control inputs with bits 04 to 07 of words m+1 and m+2.
	09	Counter 1 Internal Control IN2	
	10	Counter 2 Internal Control IN1	
	11	Counter 2 Internal Control IN2	
	12 to 15	---	Not used.
n+1	00 to 15	Sampling Time	(Enabled in sampling mode only.) A sampling time can be set within a range of 1 to 9,999 ms and with 1-ms increments. 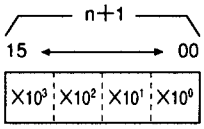 Range: 0001 to 9999 ms Unit: 1 ms To set two counters to sampling times different to each other, the sampling times must be set during two I/O refresh cycles of the PC. Set counter 1 to a sampling time by setting word n bit 01 to 1 and bit 02 to 0 and then set counter 2 to a sampling time with by setting word n bit 01 to 0 and bit 02 to 1. Counters 1 and 2 will be set to the same sampling time if word n bits 01 and 02 are set to 1.

Word (input)	Bit		Flag	Function
n+2, n+3	00 to 15		Present Counter 1 Value	BCD 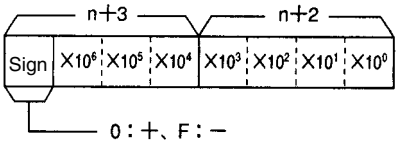 Stored data range: –8,388,608 to 8,388,607 Hexadecimal 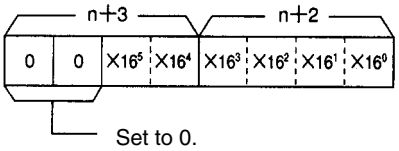 Stored data ranges: 800000 to FFFFFF (–8,388,608 to –1) and 000000 to 7FFFFF (0 to 8,388,607)
n+4, n+5	00 to 15		Present Counter 2 Value	Refer to the information on the above present counter 1 value.
n+6	00	Counter 1	Counting	Set to 1 when the counter is counting.
	01		Input Z	Indicates the status of input Z (1: H; 0: L)
	02		Control Input IN1	Indicates the status of external control input IN1 (1: H; 0: L)
	03		Control Input IN2	Indicates the status of external control input IN2 (1: H; 0: L)
	04		Counter Overflow	Set to 1 when the count value is not within a range of –8,388,608 to 8,388,607. Reset or restart the counter when this bit is set to 1.
	05		---	Not used.
	06		Counter Operating	Set to 1 while either of the counters is counting.
	07		Unit Busy	Set to 1 while the IOWR instruction is processed for the C200HX, C200HG, or C200HE PC or the Unit is initialized after restarted.
	08	Counter 2	Counting	Refer to the information on the above counter 1
	09		Input Z	
	10		Control Input IN1	
	11		Control Input IN2	
	12		Counter Overflow	
	13		---	Not used.
	14		Data Transfer Completion	Set to 0 from 1 or vice versa when the Unit has completed processing the IOWR instruction.
	15		Error	Set to 1 when an error results. The error code and error location will be output to word n+7 by setting the READ ERROR Command to 1.
n+7	00 to 15		Error Data	An error code and error location are output in the following format. 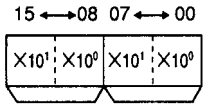 Error code Error location Two rightmost DM digits are indicated. Refer to *SECTION 11 Error Processing and Troubleshooting*.
n+8	00 to 15		Counter 1 Sampling Time	Indicate the current sampling time for counter 1.
n+9	00 to 15		Counter 2 Sampling Time	Indicate the current sampling time for counter 2.

SECTION 6
Guidance for Program Development

This section describes the steps required to operate the High-speed Counter Unit in each mode, the DM required for unit number settings, and IR bit allocation.

6-1 Operating Steps 64
6-2 Unit Number Setting. 65

6-1 Operating Steps

Take the following steps to operate the High-speed Counter Unit.

1,2,3...

1. Decide the unit number of the High-speed Counter Unit and set the MACHINE No. switch to that unit number.
2. Decide the operating mode and set the MODE switch to that operating mode.
3. When using external outputs, set the rear setting switch to NPN or PNP according to the external outputs.
4. Set the DM allocated to the High-speed Counter Unit to the necessary data using a ladder program or Programming Console. Any data that cannot be transferred with the ladder program must be set with the Programming Console.
5. Set the IR area allocated to the High-speed Counter Unit to commands that are used for the operation of the High-speed Counter Unit.
6. Use the commands sent from the PC to the High-speed Counter Unit and the status data of the High-speed Counter Unit to write programs for system control.

Set the MACHINE No. switch within a range of 0 to F.

Set the MODE switch within a range of 0 to 6 for the following modes.

0: Simple counter mode
1: Linear mode
2: Circular mode
3: Preset mode
4: Gate mode
5: Cumulative gate mode
6: Sampling mode

Note Refer to *2-2 High-speed Counter Unit Components* for the settings of MACHINE No., MODE, and rear setting switch.

A data area of the PC can be set to a range and to count value data with a ladder program or the Programming Console. The data can be transferred to the High-speed Counter Unit even if it is in operation.

Data can be transferred by setting data transfer bit to 1. When the C200HX, C200HG, or C200HE PC is used, the IOWR instruction can be used to change ranges and count values.

Note Refer to *SECTION 10 Using IORD and IOWR Instructions* for the IOWR instruction in detail.

6-2 Unit Number Setting

The C200H and C200HS PCs can each use a maximum of 10 Special I/O Units and their unit numbers set within a range of 0 to 9.

The C200HX, C200HG, and C200HE PCs can each use a maximum of 16 Special I/O Units, the unit numbers of which are set within ranges of 0 to 9 and A to F.

DM

A block of 100 words within a range of DM 1000 to DM 2599 is allocated to the Special I/O Unit.

The words allocated to the Special I/O Unit are within the following range.

Word m to word m+99 (m = 1000 + 100 x Unit No. 0 to 15)

Unit No.	DM	Unit No.	DM
0	DM 1000 to 1099	8	DM 1800 to 1899
1	DM 1100 to 1199	9	DM 1900 to 1999
2	DM 1200 to 1299	A	DM 2000 to 2099
3	DM 1300 to 1399	B	DM 2100 to 2199
4	DM 1400 to 1499	C	DM 2200 to 2299
5	DM 1500 to 1599	D	DM 2300 to 2399
6	DM 1600 to 1699	E	DM 2400 to 2499
7	DM 1700 to 1799	F	DM 2500 to 2599

IR Bit

A block of 10 words within a range of IR 100 to IR 199 or IR 400 to IR 459 is allocated to the Special I/O Unit.

The words allocated to the Special I/O Unit are within the following range.

Word n to n+9 (n = (100 + 10 x Unit No. 0 to 9) or (400 + 10 x (Unit No. – 10) (Unit No. 10 to 15))

IR words n and n+1 are used for outputs from the PC to the Special I/O Unit and IR words n+2 to n+9 are used for inputs from the Special I/O Unit to the PC.

Unit No.	IR bit		Unit No.	IR bit	
	Output	Input		Output	Input
0	IR 100 to 101	IR 102 to 109	8	IR 180 to 181	IR 182 to 189
1	IR 110 to 111	IR 112 to 119	9	IR 190 to 191	IR 192 to 199
2	IR 120 to 121	IR 122 to 129	A	IR 400 to 401	IR 402 to 409
3	IR 130 to 131	IR 132 to 139	B	IR 410 to 411	IR 412 to 419
4	IR 140 to 141	IR 142 to 149	C	IR 420 to 421	IR 422 to 429
5	IR 150 to 151	IR 152 to 159	D	IR 430 to 431	IR 432 to 439
6	IR 160 to 161	IR 162 to 169	E	IR 440 to 441	IR 442 to 449
7	IR 170 to 171	IR 172 to 179	F	IR 450 to 451	IR 452 to 459

After setting the unit number, check the DM and IR areas allocated to the High-speed Counter Unit and write programs.

SECTION 7
Program Development with Drum Function

This section describes program development using the drum function in linear and circular modes.

7-1 Performance Specifications of Drum Function 68
7-2 DM Area Settings and Functions 68
7-3 IR Area Settings and Functions 71
7-4 I/O Signal Timing Chart 74
7-5 Data Transfer Programs 75
7-5-1 Data Transfer Steps 75
7-5-2 Transfer Data Format (IR and DM Areas of PC) 76
7-5-3 Program Example for Range Change 77
7-5-4 Program Example for Present Counter Value Change 78
7-6 Program Example for Linear Mode 80
7-7 Program Example for Circular Mode 82

7-1 Performance Specifications of Drum Function

Refer to the following for the performance specifications of the drum function.

Item		Specification		
Count input signal	Offset phase input	Counter input A (A phase of encoder) Counter input B (B phase of encoder)		
	Up and down pulse input	Counter input A (Down pulse input) Counter input B (Up pulse input)		
	Pulse and direction input	Counter input A (Direction input) Counter input B (Pulse input)		
External input signal		Counter input Z (Counter reset signal) External control input (Control input IN2 is not used.)		
Count range		Linear mode: –8,388,608 to 8,388,607 Circular mode: 0 to 65,535 (Values can be specified in hexadecimal.)		
Multiplication function		x1, x2, x 4 (for offset phase inputs only)		
Set data		Set data: Lower limit, upper limit, 8 external/internal outputs, and 8 internal outputs No. of data blocks: 16		
Response speed (in linear and circular modes) (Count input to external output)		Set data	BCD	Hexadecimal
		1 to 16 blocks of data	1.2 ms max.	1.0 ms max.

Note The number of response speed data blocks is the total number of response speed data blocks that can be set with counters 1 and 2.

⚠ **Caution** In circular mode, when performing reset or overwriting the present counter value with 0, stop the counter first. If the counter is not stopped, preset operation at the maximum value may not be performed correctly.

7-2 DM Area Settings and Functions

Values can be written to the DM area with ladder programs or the Programming Console.

m = 1000 + 100 x Unit No. (0 to 15)

The values set in the DM area will be transferred to the High-speed Counter Unit when the High-speed Counter Unit is turned ON or restarted. Any set value changed while the High-speed Counter Unit is in operation will be transferred to the High-speed Counter Unit when it is turned ON again or restarted.

Note

1. The present counter value and upper and lower limits can be changed even when the Unit is operating. Refer to *7-5 Data Transfer Programs*.
2. The present counter value and upper and lower limits can be changed with the C200HX, C200HG, or C200HE PC by using the IOWR instruction. Refer to *SECTION 10 Using IORD and IOWR Instructions*.

Description

In this manual, the words and bits of counter 1 are described first followed by the words and bits of counter 2.

In the following example, word m+1 bit 04 is for counter 1 and word m+2 bit 05 is for counter 2.

Example: Counter input type (Word (m+1) or (m+2) bits 03 to 00)
Counter reset (Word n bits 04 or 05)

Operating Mode (Word m Bits 03 to 00)

Set these bits so that the setting will correspond to the MODE switch setting.

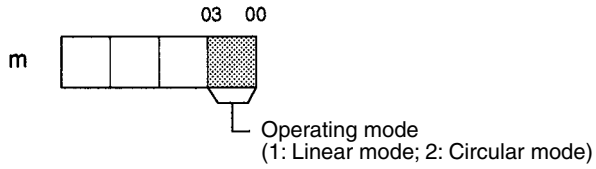

Forced External Output (Word m Bits 04 to 07)

Forced external outputs are enabled or disabled with these bit settings.

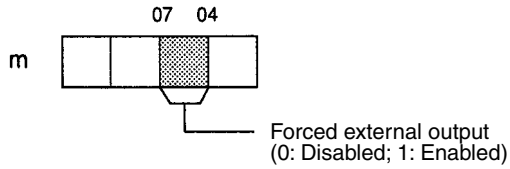

External Output Mode (Word m Bits 11 to 08)

Set these bits so that the setting will correspond to the setting of the rear setting switch.

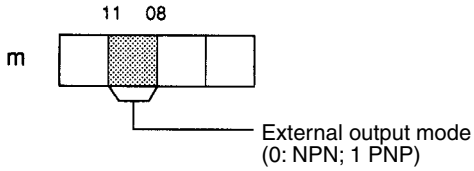

Data Type (Word m Bits 15 to 12)

These bits are used to set the counter value, upper limit, and lower limit data in BCD or hexadecimal.

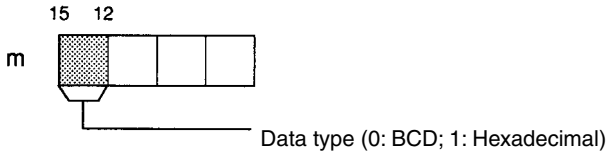

Counter Input Type (Word (m+1) or (m+2) Bits 03 to 00)

Offset phase pulse inputs must be multiplied by 1, 2 or 4.

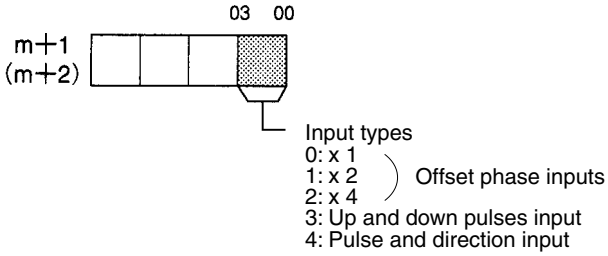

Reset Mode (Word (m+1) or (m+2) Bits 15 to 08)

These bits are used to specify the counter reset mode.

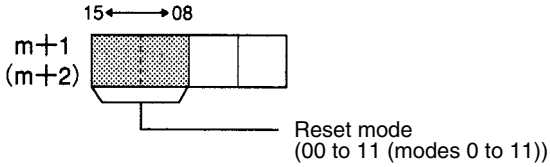

Range Enabled/Disabled (Word (m+5) or (m+6))

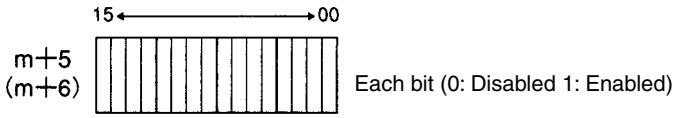

These bits are used to enable or disable ranges 0 to 15. Bits 00 to 15 correspond to ranges 0 to 15.

The settings will be valid when the High-speed Counter Unit is turned ON or restarted until new ranges are transferred to the High-speed Counter Unit.

In the following example, ranges 0, 1, 4, and 15 are enabled.

15											04			01	00
1	0	0	0	0	0	0	0	0	0	0	1	0	0	1	1

Maximum Count Value (Word (m+7) and (m+8) Word (m+9) and (m+10))

These bits must be set in circular mode only.

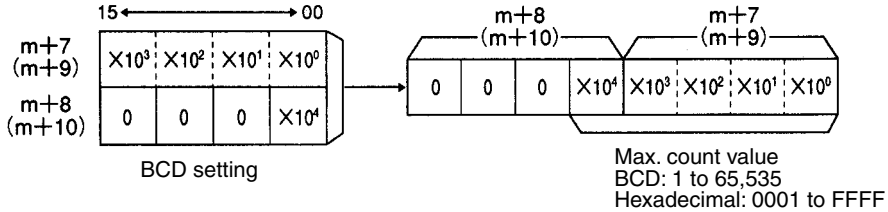

Set these bits to the maximum count values of the counters.

For example, the count value changes as shown below if the maximum count value of a counter is 9,999.

. . . 9997 ↔9998 ↔ 9999 ↔ 0 ↔ 1 ↔ 2 . . .

Upper and Lower Limits, and Output Pattern

A maximum of 16 ranges can be set within a range of word m+15 for range 0 and word m+94 for range 15. Each range uses five words.

Example:Range 0 (BCD)

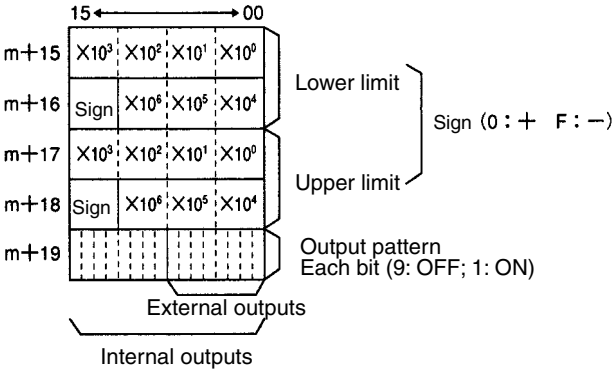

Lower and Upper Limits

Lower and upper limits must satisfy the following conditions, otherwise an error will result when the High-speed Counter Unit is turned ON and the Unit will not operate.

Linear Mode: –8,388,608 ≤ Lower limits ≤ Upper limits ≤ 8,388,607

Note Lower and upper limits both cannot be set to 8,388,607.

Circular Mode: 0 ≤ Lower limits; Upper limits ≤ 65,535

If the range of upper and lower limits includes 0, the lower limit will be larger than the upper limit in circular mode. Refer to the following example.

Example: Upper and lower limit ranges in circular mode

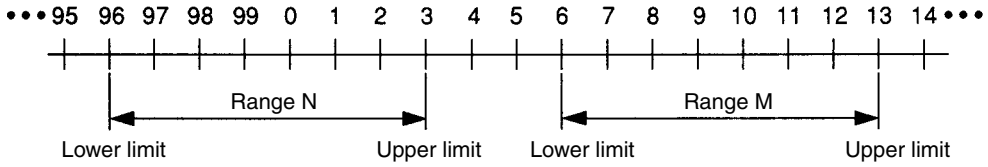

No pattern output will be obtained with pulse input frequencies if the upper and lower limits are too close.

In such a case, extend the range.

Output Pattern

The output pattern will set output bits to 1 when the present counter value is between upper and lower limits.

The data of internal outputs (bits 15 to 00) will be transferred to IR word n+9.

The data of external outputs (bits 07 to 00) will be output to output points 0 to 7 of the external connector if the external outputs are enabled with IR word n bit 07 set to 1.

If the count value is within more than one range, the OR of the output patterns is output.

Note Any unused range must be set to 0.
The High-speed Counter Unit checks all ranges when the Unit is initialized. An error will result if any unused range is not set to 0 even if the bit is disabled with words m+5 and m+6.
The High-speed Counter in circular mode checks the relationship between each valid range and the corresponding maximum count value. An error will result if the relationship between a valid range and the corresponding maximum count value is incorrect.

7-3 IR Area Settings and Functions

IR bits can be used to check the I/O data of the High-speed Counter Unit, such as the commands in use and the status data of the Unit.

n = 100 + 10 x Unit No. (Unit No. 0 to 9)
n = 400 + 10 x (Unit No. – 10) (Unit No. 10 to 15)

Output data means any data output from the PC to the High-speed Counter Unit and input data means any data input from the High-speed Counter Unit to the PC.

Start/Stop (Word n Bit 00)

The High-speed Counter Unit starts counting at the rising edge of this bit and stops counting at the falling edge of this bit.

If the forced external output function is disabled, the preset counter value and output pattern in use will be kept on hold. The output pattern of forced external outputs 0 to 7 (word n bits 08 to 15) will be output if the external output function is enabled with word n bit 07 together with the forced external output function.

Counter Reset (Word n Bits 04 or 05)

The count value is reset to 0 at the rising edge of this bit.

If counter 1 or 2 not in operation is reset, the count value will be cleared and the internal and external outputs will be turned OFF.

Note The count value can be reset with counter input Z or external control input IN1. Refer to *4-10 Counter Reset Conditions*.

External Output Enabled (Word n Bit 07)

External outputs 0 to 7 will be enabled and the corresponding indicators will be lit if this bit is set to 1. Data is transferred to word n+9 regardless of the setting of this bit.

Forced External Outputs 0 to 7 (Word n Bits 08 to 15)

External outputs 0 to 7 will be turned ON if these bits are set to 1. Bits 08 to 15 correspond to external outputs 0 to 7. Use these bits to check wiring. Take the following steps to use this function.

1,2,3...

1. Enable the forced external output function. (DM m bits 04 to 07 = 1)
2. Set Start/Stop Bit (word n bit 00) to 0 to stop the High-speed Counter Unit.
3. Enable the external output function by setting word n bit 07 to 1.
4. Set forced external outputs 0 to 7 (word n bits 08 to 15) to 0.
5. Turn ON any external outputs out of external outputs 0 to 7 by setting the corresponding bits to 1.

Word	Bit	Output
Wd n	08	Forced external output 0
	09	Forced external output 1
	10	Forced external output 2
	11	Forced external output 3
	12	Forced external output 4
	13	Forced external output 5
	14	Forced external output 6
	15	Forced external output 7

Change Ranges (Word n Bits 01 or 02)

The High-speed Counter Unit sets ranges enabled with words m+5 and m+6 to the data of word n+1 at the rising edge of this bit.

Take the following steps to change the ranges.

1,2,3...

1. Set word n+1 to the data to enable or disable ranges.

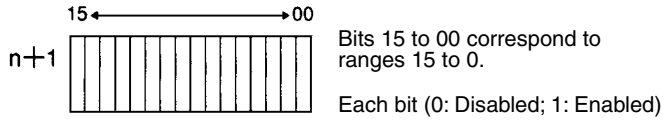

2. Enable the ranges by setting word n bits 01 or 02 to 1. This function will be effective immediately even when the High-speed Counter Unit is counting.

Read Error (Word n Bit 06)

If an error results, the Error Flag (word n+6 bit 15) will be set to 1, at which time the error codes will be output to word n+7 when word n bit 06 is set to 1.

The Read Error is set to 0 when all the error data is read. Repeatedly turn this bit ON until this error code is set to 0.

The error codes can be read again from the first error code if this bit is set to 1.

Error Data

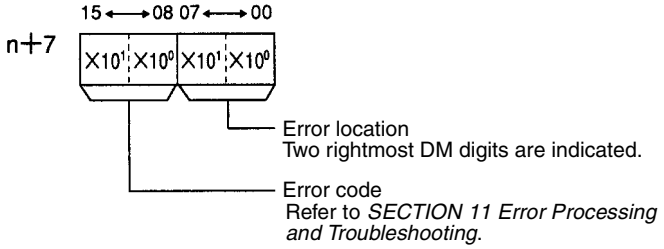

Preset Counter Value (Words (n+2) and (n+3) Words (n+4) and (n+5))

These words are used to store the present counter values of the counters.

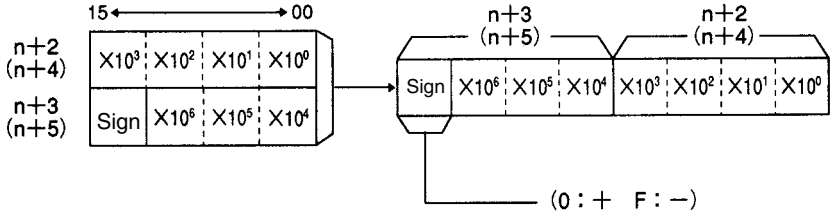

The above is a setting example in BCD.

The following data is stored.

BCD: –8,388,608 to 8,388,607

Hexadecimal: 800000 to FFFFFF (–8,388,608 to –1) and 000000 to 7FFFFF (0 to 8,388,607)

Status Data (Word n+6)

The status of the High-speed Counter Unit is transferred to the PC.

Bit	Flag		Function
00	Counter 1	Counting	Set to 1 when the counter is counting.
01		Input Z	Indicates the status of input Z.
02		Control Input IN1.	Indicates the status of control input IN1.
03		Control Input IN2.	Indicates the status of control input IN2 1: ON 0: OFF
04		Counter Overflow	Set to 1 when the count value is not within a range of –8,388,608 to 8,388,607. Reset the counter when this bit is set to 1.
05		Reset	Set to 1 during a scan of the PC after the counter is reset.
06	Counter operating		Set to 1 and the RUN indicator is lit while either of the counters is counting.
07	Unit busy		Set to 1 while the IOWR instruction is processed for the C200HX, C200HG, or C200HE PC or while data transfer is being processed. It is set to 1 while the Unit is being initialized after it is restarted.
08	Counter 2	Counting	Refer to the information on the above counter 1
09		Input Z	
10		Control Input IN1.	
11		Control Input IN2.	
12		Counter Overflow	
13		Reset	
14	Data Transfer Completion		Set from 1 to 0 or vice versa when the data transfer is completed or Unit has completed processing the IOWR instruction.
15	Error		Set to 1 when an error results.

Operating Range No. (Word n+8)

Bits 00 to 15 correspond to ranges 0 to 15. One of these bits will be ON when the present counter value of either counter is between the corresponding upper and lower limits.

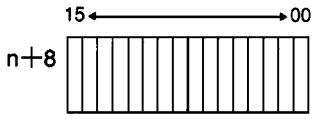

Output Status (Word n+9)

These bits indicate the status of outputs.

These bits are set to 1 regardless of the setting of word n bit 07 for the external output enabled function.

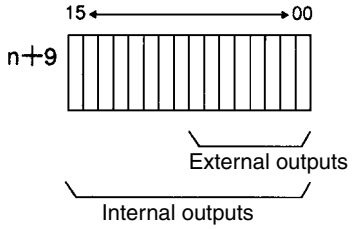

7-4 I/O Signal Timing Chart

Refer to the following for the relationship between input and output bits in linear and circular modes.

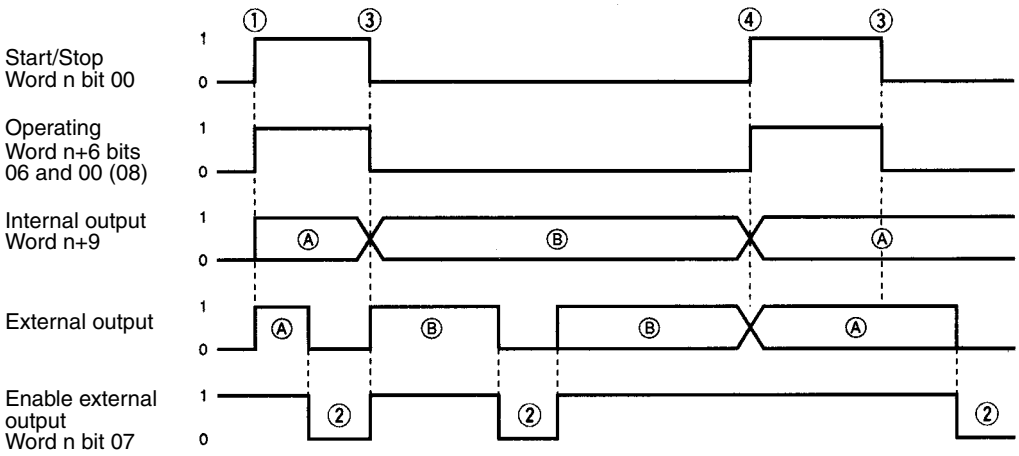

(A): The normal outputs of the High-speed Counter Unit
(B): The output status of the High-speed Counter Unit not in operation
The value in the parentheses are for counter 2
) Forced external outputs are disabled.

(A): The normal outputs of the High-speed Counter Unit
(B): The forced external outputs of the High-speed Counter Unit
) Forced external outputs are enabled.

1,2,3...

1. These bits are turned ON at the rising edge of the start/stop bit.
2. No external output will be available if the external output function is disabled.

   or If the forced external output function is enabled, no internal and external output will be available when the external output function is disabled.
3. The High-speed Counter Unit will stop counting when the Start/Stop Bit is set to 0. The previous internal and external outputs will be kept on hold.
4. If these bits are turned ON while the High-speed Counter Unit has forced external outputs, the High-speed Counter Unit will have normal external outputs and no forced external output will be available.

7-5 Data Transfer Programs

The High-speed Counter Unit usually operates according to a maximum of 16 ranges set in the DM area. New ranges can be, however, transferred from the PC so that the High-speed Counter Unit can use new ranges.

Note After writing a program, make sure that the program works properly.

7-5-1 Data Transfer Steps

Take the following steps to transfer data.

1, 2, 3...

1. Set the data storage area of the source.
2. Turn ON or restart the High-speed Counter Unit.

Initial settings

3. Set the ranges or count value.
4. Execute data transfer.

After turning ON or restarting the High-speed Counter, follow steps 3 and 4 to transfer data.

1,2,3...

1. **Data Storage Area of Source**
   The data storage area cannot be changed after turning ON or restarting the High-speed Counter Unit unless the IOWR instruction is used. The IOWR instruction cannot be used with all PCs.

   Set DM word m+3 and m+4 to the first word number of transfer data, PC data area, and the number of data blocks.

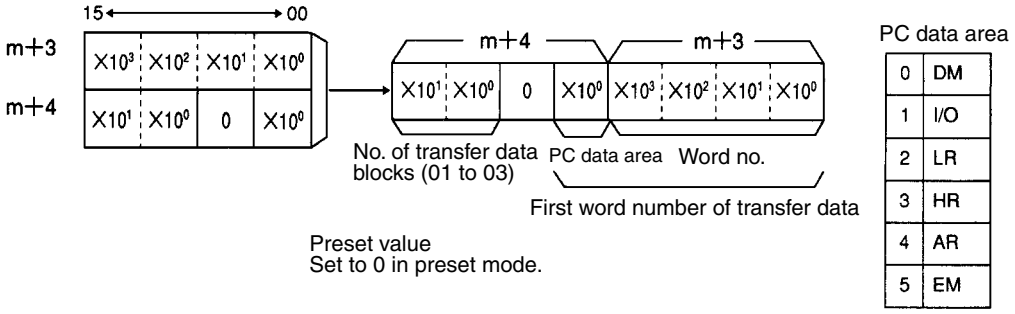

The EM area is available for the C200HX and C200HG PCs.

2. **When Turning ON or Restarting**
   Data will be transferred from the PC to the data memory area of High-speed Counter Unit when the High-speed Counter Unit is turned ON or restarted.

3. **Setting the Ranges or Count Value**
   Values can be written to the data area or DM area of the PC with ladder programs or the Programming Console.

   Six Words Used by Transfer Data:
   A transfer data block uses six words. Three ranges with range numbers can be transferred at a time. Write these ranges to consecutive words in the same area.

   Transfer the present counter value in a data block.

4. **Data Transfer**
   Set word n bit 03 to 1 to execute data transfer.

   Ranges and the present counter value can be transferred after the above bit is set to 1 and completed from the next I/O refresh on.

   The completion of data transfer can be checked with word n+6 bit 14. This bit will be set from 0 to 1 or vice versa when the data transfer has been completed.

Note Execute data transfer when the counters are not operating, otherwise no correct output pattern will be obtainable.

7-5-2 Transfer Data Format (IR and DM Areas of PC)

Upper and Lower Limits N: The first word number of the area set with the PC

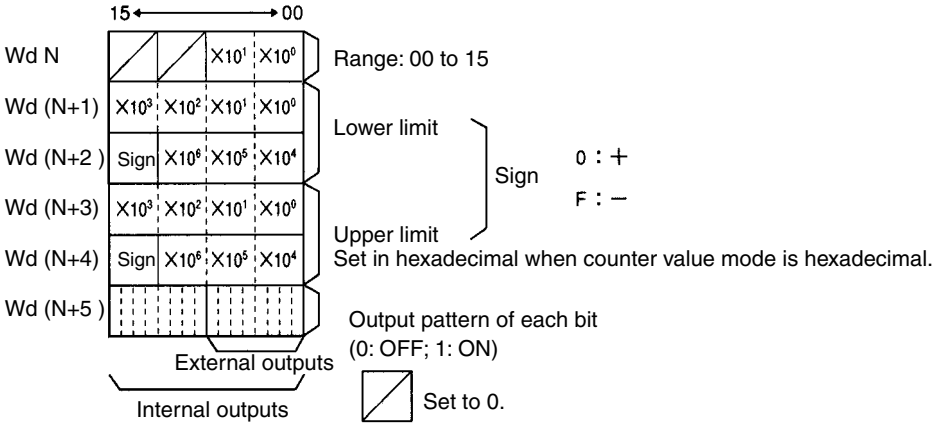

A block of data consists of a range number, upper limit, lower limit, and output pattern. Upper and lower limits must satisfy the following conditions.

Linear mode: –8,388,608 ≤ Lower limit ≤ Upper limit ≤ 8,388,607

Note Lower and upper limits cannot both be set to 8,388,607.

Circular mode: 0 ≤ Lower limits; Upper limits ≤ 65,535
If the range of upper and lower limits includes 0, the lower limit will be larger than the upper limit in circular mode.

Example: Present Counter Value

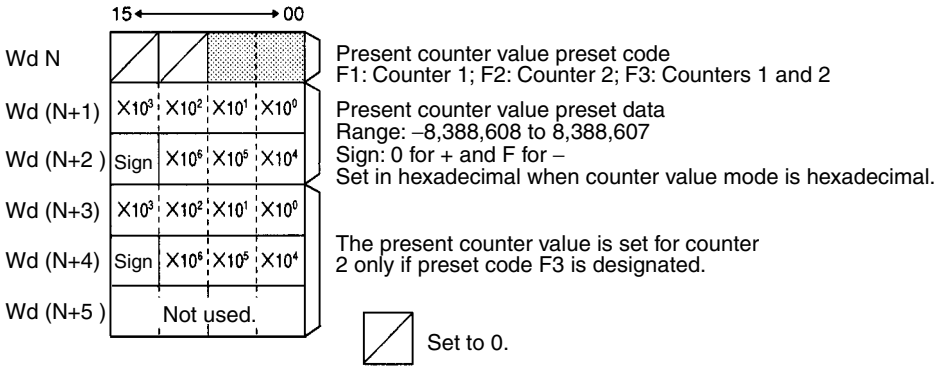

Transfer the present counter value in a block of data. If there is more than one block of transfer data, set the first block to the present counter value. The High-speed Counter Unit ignores the data in the succeeding blocks.

7-5-3 Program Example for Range Change

The range is changed with external data transfer switches in the following example.

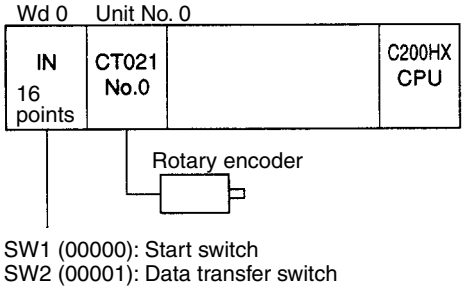

1,2,3... 1. Prepare a data storage area for the source.

Set as shown in the following diagram because the unit number is 0, the area is the DM, and the number of transfer data blocks is 3.

DM 1003	0	9	0	0	First word no. of source
DM 1004	0	3	0	0	No. of transfer data blocks and PC data area

2. Store the range data to be used in a DM area that is not used by the Special I/O Unit.

The words must be from DM 0900 on.

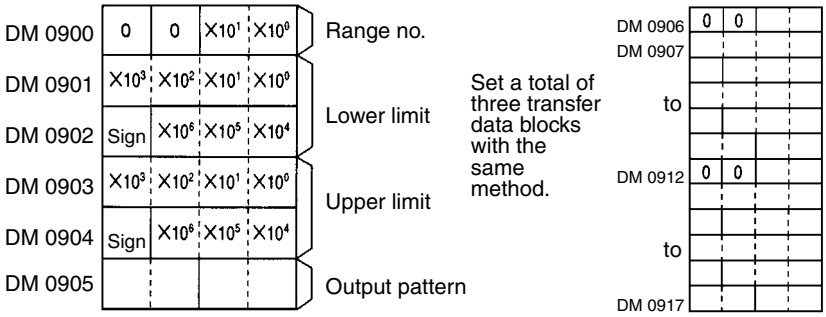

To transfer more than three transfer data blocks, store them in a different area, and move three data blocks to DM 0900 to DM 0917 to transfer each time. A total of three blocks of transfer data can be transferred at a time.

3. Program

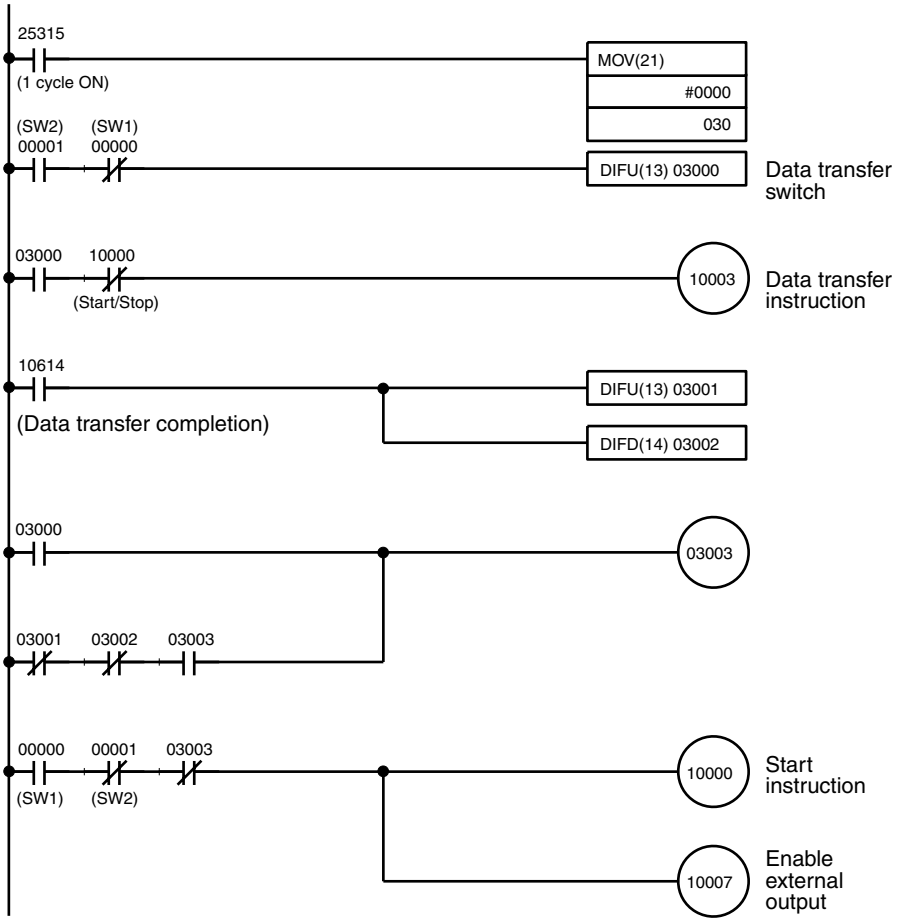

7-5-4 Program Example for Present Counter Value Change

The present counter value of counter 1 is changed to the value set with rotary switches in the following example.

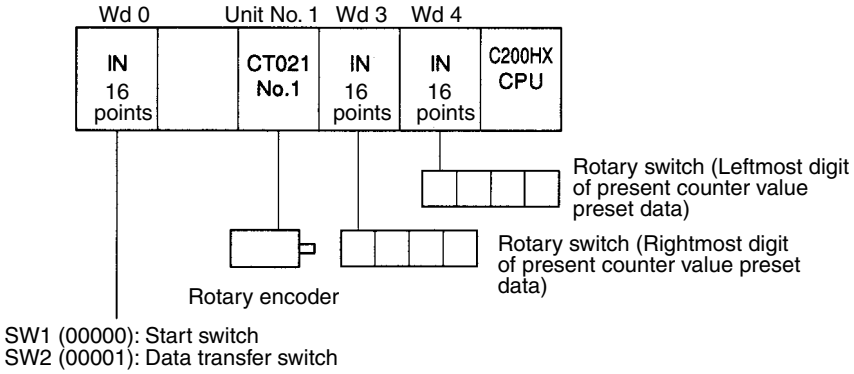

1,2,3... 1. Prepare a data storage area for the source.

Set as shown in the following diagram because the unit number is 1, the PC data area is the I/O area, and the number of transfer data blocks is 1.

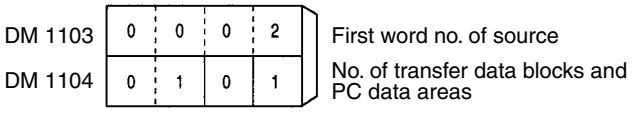

2. Present Counter Value Preset Data

Wd 2	0	0	F	1	Code (Set with a program)
Wd 3	$\times 10^3$	$\times 10^2$	$\times 10^1$	$\times 10^0$	Present counter value preset data (Set with the rotary switches)
Wd 4	Sign	$\times 10^6$	$\times 10^5$	$\times 10^4$	

3. Program

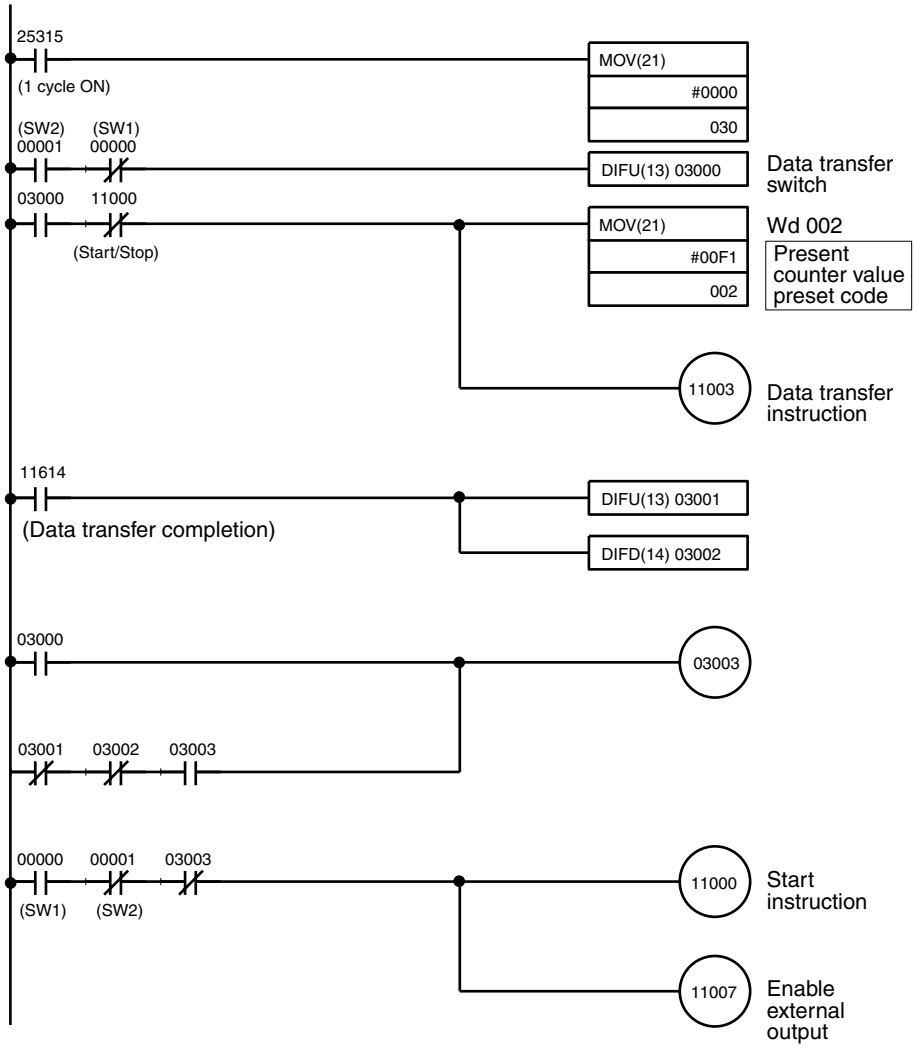

7-6 Program Example for Linear Mode

This section explains a program example for a system using counter 1 of the High-speed Counter Unit in linear mode.

Note After writing a program, make sure that the program works properly.

System Configuration

Process Control for a Conveyor Belt

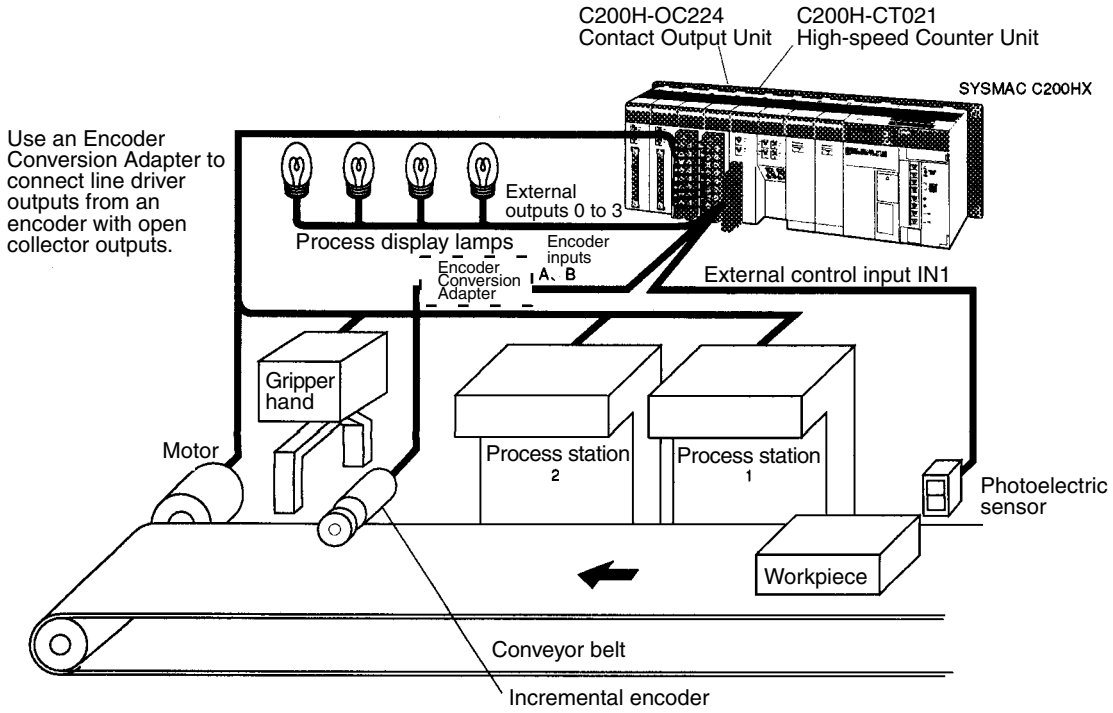

Operation

The positions of workpieces on a conveyor belt are detected by means of pulse inputs from the encoder, and processes are then carried out at the required positions.

1,2,3...

1. The photoelectric sensor detects that a workpiece has been placed on the conveyor belt, and the count is reset.
2. Processes are carried out at each process station according to the count.
3. The stopping and starting of the motor and the movement of the gripper hand are controlled at the PC.

   Offset phase inputs multiplied by 1 are input to the encoder.
   BCD data is used in the system.
   The counter is reset at the rising edge of external control input IN1.

Switch Settings

The unit number of the High-speed Counter Unit is set to 1 and the Unit will have NPN external outputs.

Wiring

Connect the outputs of the photoelectric sensor to external control IN1.

Connect the A- and B-phase outputs of the incremental encoder to counter 1 inputs A and B.

Connect external outputs 0 to 3 to the process display lamps.

Connect the outputs of the Contact Output Unit (C200H-OC224) to the motor and the gripper hand.

DM Settings

Example:Counter 1

DM 1100	0	0	0	1	Linear mode, external NPN outputs, BCD data, offset phase pulse inputs x 1, reset mode 10
DM 1101	1	0	0	0	
DM 1105	0	0	0	F	Enabled ranges: 0 to 3
DM 1115	1	0	0	0	Range 0 1000 to 1200 (in process station 1)
DM 1116	0	0	0	0	
DM 1117	1	2	0	0	External output 0: ON Internal output: 0101 (bits 08 and 00: ON)
DM 1118	0	0	0	0	
DM 1119	0	1	0	1	
DM 1120	2	5	0	0	Range 1 2500 to 2900 (in process station 2)
DM 1121	0	0	0	0	
DM 1122	2	9	0	0	External output 1: ON Internal output: 0202 (bits 09 and 01: ON)
DM 1123	0	0	0	0	
DM 1124	0	2	0	2	
DM 1125	5	0	0	0	Range 2 5000 to 9500 (at the gripper hand position)
DM 1126	0	0	0	0	
DM 1127	9	5	0	0	External output 2: ON Internal output: 0304 (bits 09, 08, and 02: ON)
DM 1128	0	0	0	0	
DM 1129	0	3	0	4	
DM 1130	9	5	0	1	Range 3 9501 to 8388607 (past the gripper hand position)
DM 1131	0	0	0	0	
DM 1132	8	6	0	7	External output 3: ON Internal output: 0408 (bits 10 and 03: ON)
DM 1133	0	8	3	8	
DM 1134	0	4	0	8	

Program Example

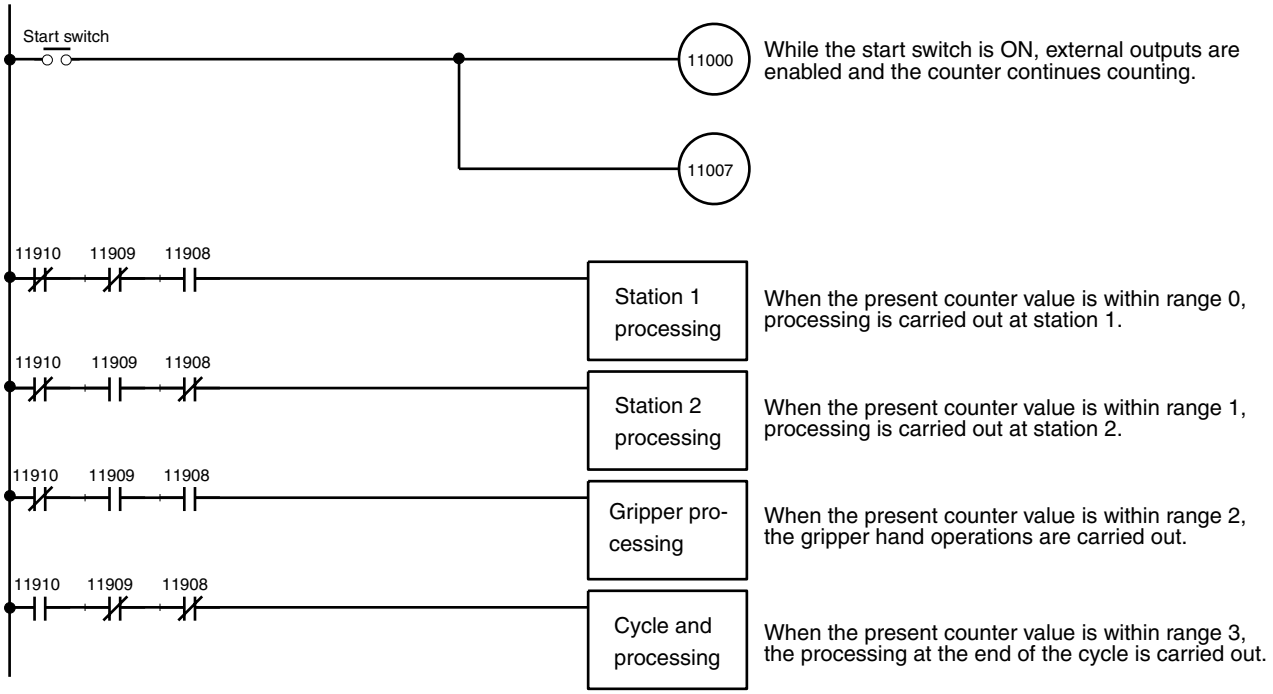

11908, 11909, 11910 — Internal outputs: Turned ON or OFF according to the settings of ranges 0 to 3. Therefore the location of each workpiece can be found and the workpiece can be processed properly.

The process display lamps are directly turned ON and OFF by external outputs 0 to 3.

The above program can be written using the operating flags of each range as follows:

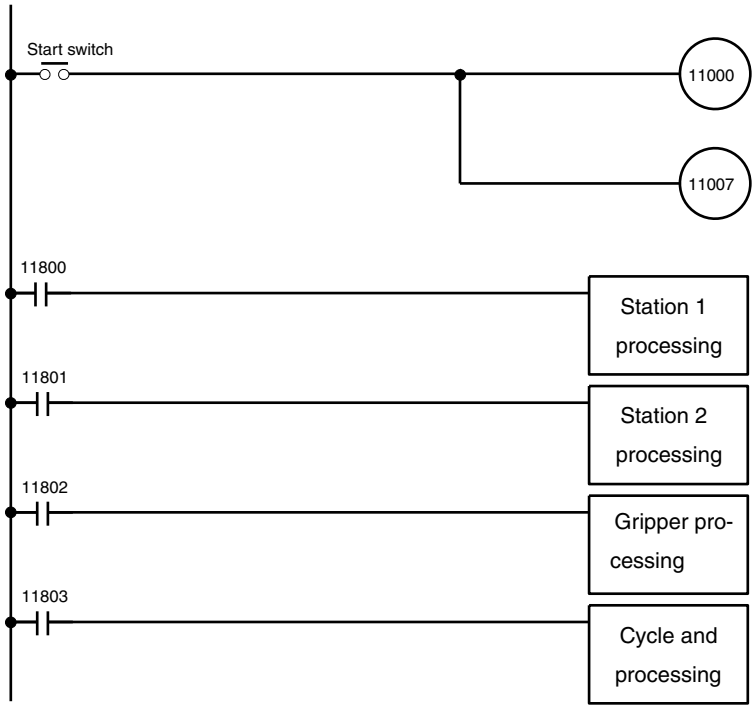

Bits 11800 to 11803 are the Operating Flags of ranges 0 to 3.

7-7 Program Example for Circular Mode

This section explains a program example for a system using counter 1 of the High-speed Counter Unit in circular mode.

Note After writing a program, make sure that the program works properly.

System Configuration Cam Timer Control

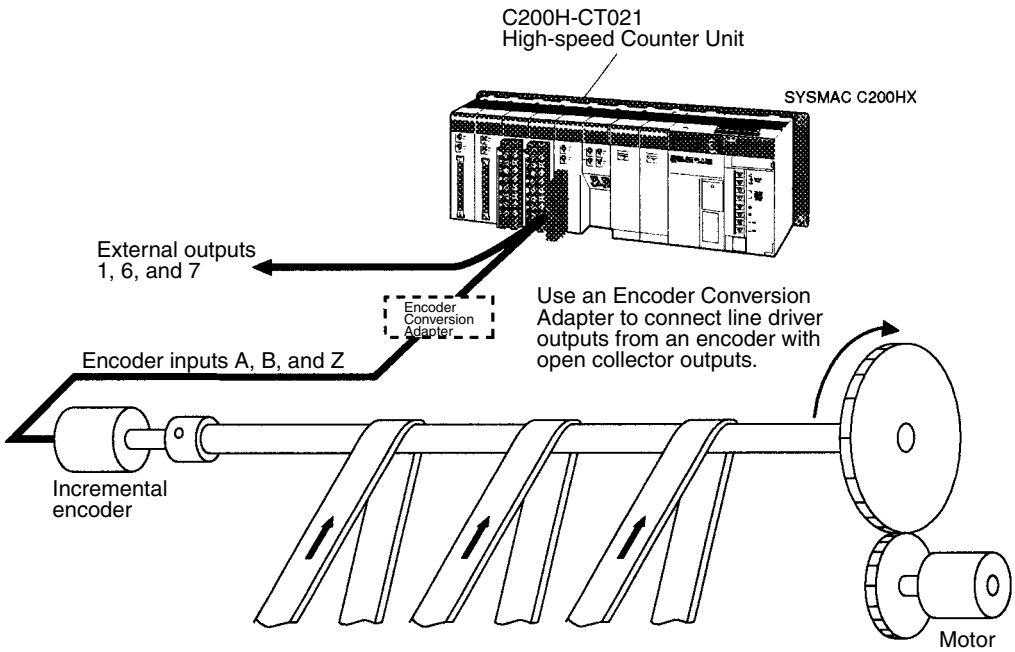

Operation

The control timing of a device connected to the shaft drive of the motor is detected by the incremental encoder, and outputs are controlled according to the angle of rotation.

Offset phase inputs multiplied by 4 are input to the encoder.

BCD data is used in the system.

The counter is reset at the rising edge of external counter input Z and Internal Reset Flag. (Mode 6)

Switch Settings

The unit number of the High-speed Counter Unit is set to 1 and the High-speed Counter Unit will have NPN external outputs.

Wiring

Connect the A-, B-, and Z-phase outputs of the incremental encoder to counter 1 inputs A, B, and Z.

Connect external outputs 1, 6, and 7 the control component of the system.

DM Settings

DM 1100	0	0	0	2	Circular mode, external NPN outputs, BCD data, offset phase pulse inputs x 4, reset mode 6
DM 1101	0	6	0	2	
DM 1105	0	0	0	7	Enabled ranges: 0 to 2
DM 1107	4	9	9	9	Maximum count value: 4,999
DM 1108	0	0	0	0	
DM 1115	1	0	0	0	Range 0 1000 to 1010
DM 1116	0	0	0	0	
DM 1117	1	0	1	0	External output 7: ON
DM 1118	0	0	0	0	
DM 1119	0	0	8	0	
DM 1120	4	3	0	0	Range 1 4300 to 200 (via 0)
DM 1121	0	0	0	0	
DM 1122	0	2	0	0	
DM 1123	0	0	0	0	External outputs 6 and 1: ON
DM 1124	0	0	4	2	
DM 1125	0	6	0	0	Range 2 600 to 3100 (via 0)
DM 1126	0	0	0	0	
DM 1127	3	1	0	0	
DM 1128	0	0	0	0	External outputs 7 and 6: ON
DM 1129	0	0	C	0	

Program Example

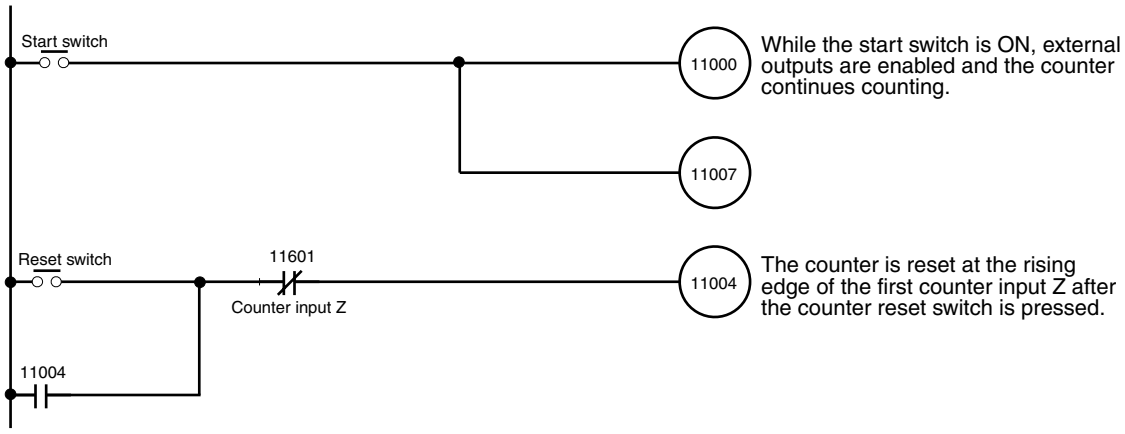

SECTION 8
Program Development with Preset Function

This section describes program development using the preset function.

8-1 Performance Specifications of Preset Function 86
8-2 DM Area Settings and Functions 87
8-3 IR Area Settings and Functions 89
8-4 I/O Signal Timing Chart 92
8-5 Data Transfer Programs 93
8-5-1 Data Transfer Steps 94
8-5-2 Program Example for Preset Value Change 95
8-6 Program Example for Preset Mode 97

8-1 Performance Specifications of Preset Function

Refer to the following for the performance specifications of the preset function.

Outputs 0 to 3 are for counter 1 and outputs 4 to 7 are for counter 2.

Item		Specification	
Count input signal	Offset phase input	Counter input A (A phase of encoder) Counter input B (B phase of encoder)	
	Up and down pulse input	Counter input A (Down pulse input) Counter input B (Up pulse input)	
	Pulse and direction input	Counter input A (Direction input) Counter input B (Pulse input)	
External input signal		External control input IN1 (Counter reset signal) External control input IN2 (Preset count start)	
External output signal		External output 0 or 4	Turned ON when the count starts and turned OFF when the counter has counted value 0+(A).
		External output 1 or 5 External output 2 or 6	Turned ON when the counter has counted preset value + (B) or preset value + (D) and turned OFF when the counter has counted value 0+(C) or 0+(E).
		External output 3 or 7	Turned ON when the count is up and turned OFF when retention time (T) has elapsed. The ON status can also be retained until the beginning of the next count.
Counter preset value		X	Range: 1 to 8,388,607 A maximum of 20 counter preset values can be set in BCD or hexadecimal. The Unit cannot operate with a counter preset value of 0.
External output ON/OFF count value		A, B, C, D, E	Setting range: 0 to 8,388,607 (0 to 8,388,606 for (A)) Values can be specified in hexadecimal One value each can be set for (A), (B), (C), (D), and (E).
Timer		T	Range: 0000 to 9999 0 to 99.99 s with 0.01-s increments

External Output Pattern

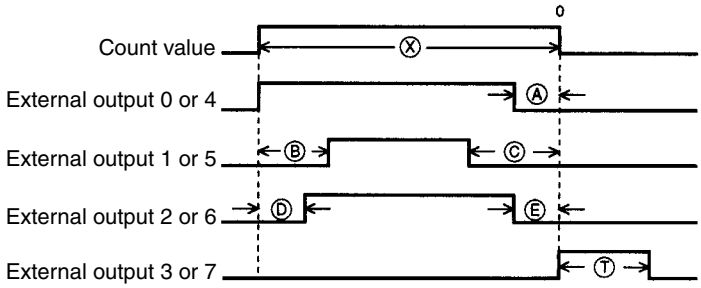

(X) and (A) to (E): Horizontal lines express count values
(T): Horizontal line expresses retention time.
(A), (C), or (E): The number of pulses after 0 until the output is turned OFF.
(B) or (D): The number of pulses after the preset value until the output is turned ON.

Set the external output ON/OFF count value based on the above count values.

Note The ON/OFF interval for outputs (e.g., the interval between (D) and (B)) must be 2 ms min. If the interval is less than that, the output may not be correctly executed.

8-2 DM Area Settings and Functions

Values can be written to the DM area with ladder programs or the Programming Console.

m = 1000 + 100 x Unit No. (0 to 15)

The values set in the DM area are transferred to the High-speed Counter Unit when the High-speed Counter Unit is turned ON or restarted. Any set value changed while the High-speed Counter Unit is in operation will be transferred to the High-speed Counter Unit when it is turned ON again or restarted.

Note Counter preset values can be changed even when the High-speed Counter Unit is operating. Refer to *8-5 Data Transfer Programs*.

Description

In this manual, the words and bits of counter 1 are described first followed by the words and bits of counter 2.

In the following example, word m+1 bit 04 is for counter 1 and word m+2 bit 05 is for counter 2.

Example: Counter input type (Word (m+1) or (m+2) bits 03 to 00)
Counter reset (Word n bits 04 or 05)

Operating Mode (Word m Bits 03 to 00)

Set these bits so that the setting will correspond to the MODE switch setting.

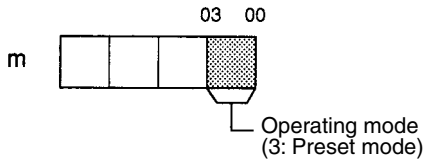

Forced External Output (Word m Bits 04 to 07)

Forced external outputs are enabled or disabled with these bit settings.

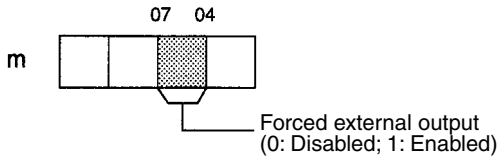

External Output Mode (Word m Bits 11 to 08)

Set these bits so that the setting will correspond to the setting of the rear setting switch.

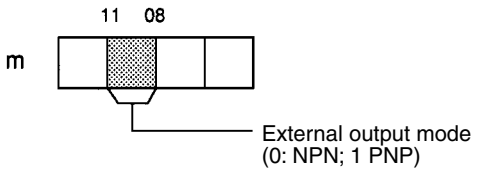

Data Type (Word m Bits 15 to 12)

These bits are used to set in BCD or hexadecimal the present counter value and count value data to turn external outputs ON and OFF.

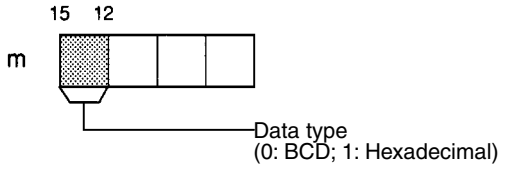

Counter Input Type (Word (m+1) or (m+2) Bits 03 to 00)

Offset phase pulse inputs must be multiplied by 1, 2 or 4.

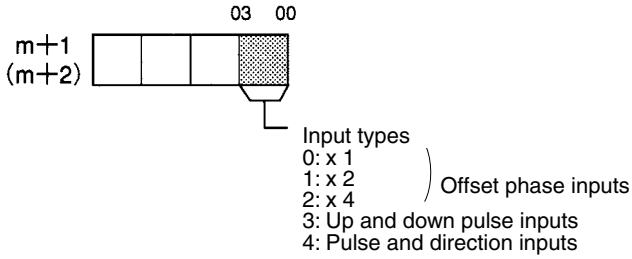

Reset Mode (Word (m+1) or (m+2) Bits 15 to 08)

These bits are used to specify the counter reset mode.

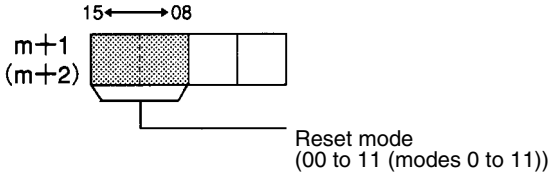

External Output ON/OFF Count Value

Words (m+10) to (m+20)
Words (m+30) to (m+40)

DM Area:

Symbol	DM (Counter 1)		DM (Counter 2)	
(A)	m+11	m+10	m+31	m+30
(B)	m+13	m+12	m+33	m+32
(C)	m+15	m+14	m+35	m+34
(D)	m+17	m+16	m+37	m+36
(E)	m+19	m+18	m+39	m+38
(T)	m+20		m+40	

Data:

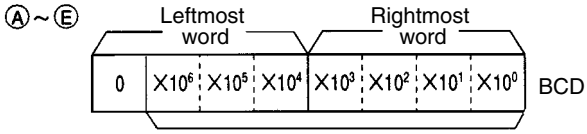

Range: 0 to 8,388,607
(0 to 8,388,606 for (A))

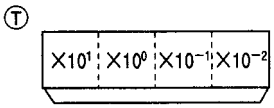

External output retention time
Range: 0 to 9999 or FFFF
Set value: 0 to 99.99 s or continuous
The external output is kept on hold until the counter starts again if the data is set to FFFF.

Counter Preset Value

A maximum of 20 counter preset values (i.e., counter preset values 0 to 19) can be set within a range of words from m+50 to m+89. Each counter preset value uses two words. Set any unused counter preset value to 0.

Example: Counter preset value (BCD)

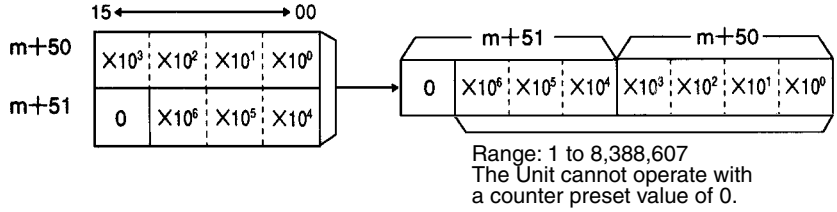

8-3 IR Area Settings and Functions

IR bits can be used to check the I/O data of the High-speed Counter Unit, such as commands in use and the status data of the Unit.

n = 100 + 10 x Unit number (Unit number 0 to 9)
n = 400 + 10 x (Unit number – 10) (Unit number 10 to 15)

Output data means any data output from the PC to the High-speed Counter Unit and input data means any data input from the High-speed Counter Unit to the PC.

Start (Word n Bits 00 or 01)

These bits are enabled only if start input settings DM m+1 (m+2) are set to 0. Counter 1 or 2 is in decrement operation at the rising edge of bit 00 or 01 beginning with the counter preset value corresponding to the preset value number set in word n+1.

Before starting, set in word n+1 the preset value number to be enabled.

The High-speed Counter Unit turns external outputs from 0 to 2 or from 4 to 6 at the external output ON/OFF count values.

If the present counter value reaches 0, the counter stops counting and external output 3 or 7 is turned ON for the preset retention time, in which case reset bit 00 or 01 to 0.

Operating Counter Preset Value Number

The counter preset values of counters 1 and 2 can be changed to ones designated by counter preset value numbers (0 to 19), which have been set in words m+50 to m+89. The numbers 00 to 19 are used. Bits 00 to 07 are for counter 1 and bits 08 to 15 are for counter 2.

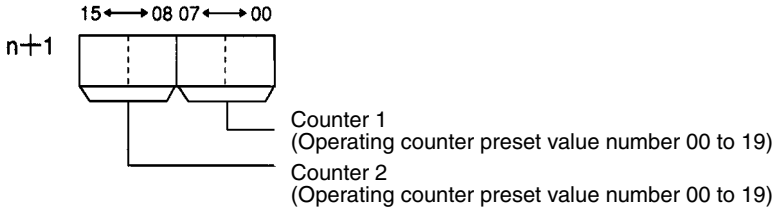

Counter Reset (Word n Bit 04 or 05)

The count value is reset at the rising edge of bit 04 or 05.

When a counter is reset, the count value will be 0 and the counter turns internal and external outputs OFF.

Note The count value can be reset with external control input IN1. Refer to *4-10 Counter Reset Conditions*.

External Output Enabled (Word n Bit 07)

Set this bit to 1 in this mode.

External outputs 0 to 7 will be enabled and the corresponding indicators will be lit if this bit is set to 1. Data is transferred to word n+9 regardless of the setting of this bit.

Forced External Outputs 0 to 7 (Word n Bits 08 to 15)

External outputs 0 to 7 will be turned ON if these bits are set to 1. Bits 08 to 15 correspond to external outputs 0 to 7. Use these bits to check wiring.

Take the following steps to use this function.

1,2,3...

1. Enable the forced external output function and restart or turn the High-speed Counter Unit ON and OFF. (DM m bits 04 to 07 = 1)
2. Set Start Bit (word n bit 00) to 0.
3. Enable the external output function by setting word n bit 07 to 1.
4. Set forced external outputs 0 to 7 (word n bits 08 to 15) to 0.
5. Turn ON any external outputs out of external outputs 0 to 7 to by setting the corresponding bits to 1.

Word	Bit	Output
Wd n	08	Forced external output 0
	09	Forced external output 1
	10	Forced external output 2
	11	Forced external output 3
	12	Forced external output 4
	13	Forced external output 5
	14	Forced external output 6
	15	Forced external output 7

Read Error (Word n Bit 06)

If an error results, the Error Flag (word n+6 bit 15) is set to 1, at which time the error codes will be output to word n+7 when word n bit 06 is set to 1.

The error data is set to 0 when all the error data is read. Repeatedly turn this bit ON until the error data is set to 0.

Error Data:

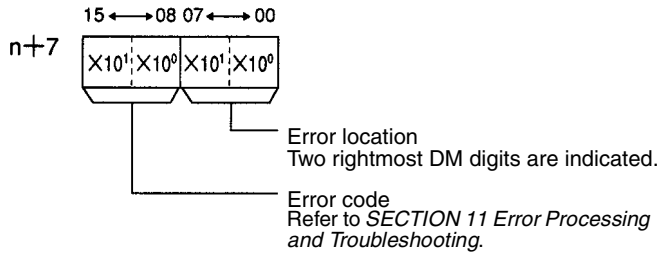

Preset Counter Value (Words (n+2) and (n+3) Words (n+4) and (n+5))

These words are used to store the present counter values of the counters.

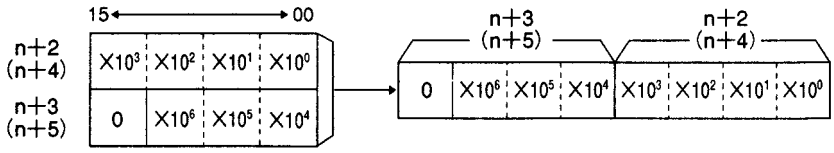

The above is a setting example in BCD.
The following data is stored.

BCD: 0 to 8,388,607
Hexadecimal: 000000 to 7FFFFF (0 to 8,388,607)

Status Data (Word n+6)

The status of the High-speed Counter Unit is transferred to the PC.

Bit	Flag		Function
00	Counter 1	Counting	Set to 1 when the counter is counting.
01		Input Z	Indicates the status of input Z.
02		Control input IN1.	Indicates the status of control input IN1.
03		Control input IN2.	Indicates the status of control input IN2 1: ON 0: OFF
04		Counter overflow	Set to 1 when the count value exceeds 8,388,607. Reset the counter when this bit is set to 1.
05		Reset	Set to 1 during a scan of the PC after the counter is reset.
06	Counter operating		Set to 1 and the RUN indicator is lit while either of the counters is counting.
07	Unit busy		Set to 1 while the IOWR instruction is processed for the C200HX, C200HG, or C200HE PC or while data transfer is being processed. It is set to 1 while the Unit is being initialized after it is restarted.
08	Counter 2	Counting	Refer to the information on the above counter 1.
09		Input Z	
10		Control input IN1.	
11		Control input IN2.	
12		Counter overflow	
13		Reset	
14	Data transfer completion		Set from 1 to 0 or vice versa when the data transfer is completed or the Unit has completed processing the IOWR instruction.
15	Error		Set to 1 when an error results.

Operating Counter Preset Value Number (Word n+8)

This word stores the numbers of counter preset values in use. Bits 00 to 07 are for counter 1 and bits 08 to 15 are for counter 2.

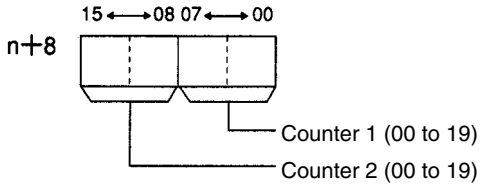

Output Status (Word n+9)

These bits indicate the status of outputs. Bits 07 to 00 correspond to external outputs 0 to 7.

These bits are set to 1 regardless of the setting of word n bit 07 for the external output enabled function.

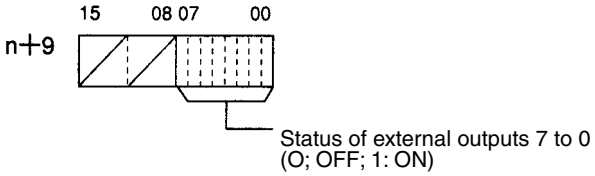

8-4 I/O Signal Timing Chart

Refer to the following for the relationship between input and output bits in preset mode.

Normal Operation

Values in parentheses are for counter 2. External outputs 0 to 3 are for counter 1 and external outputs 4 to 7 are for counter 2.

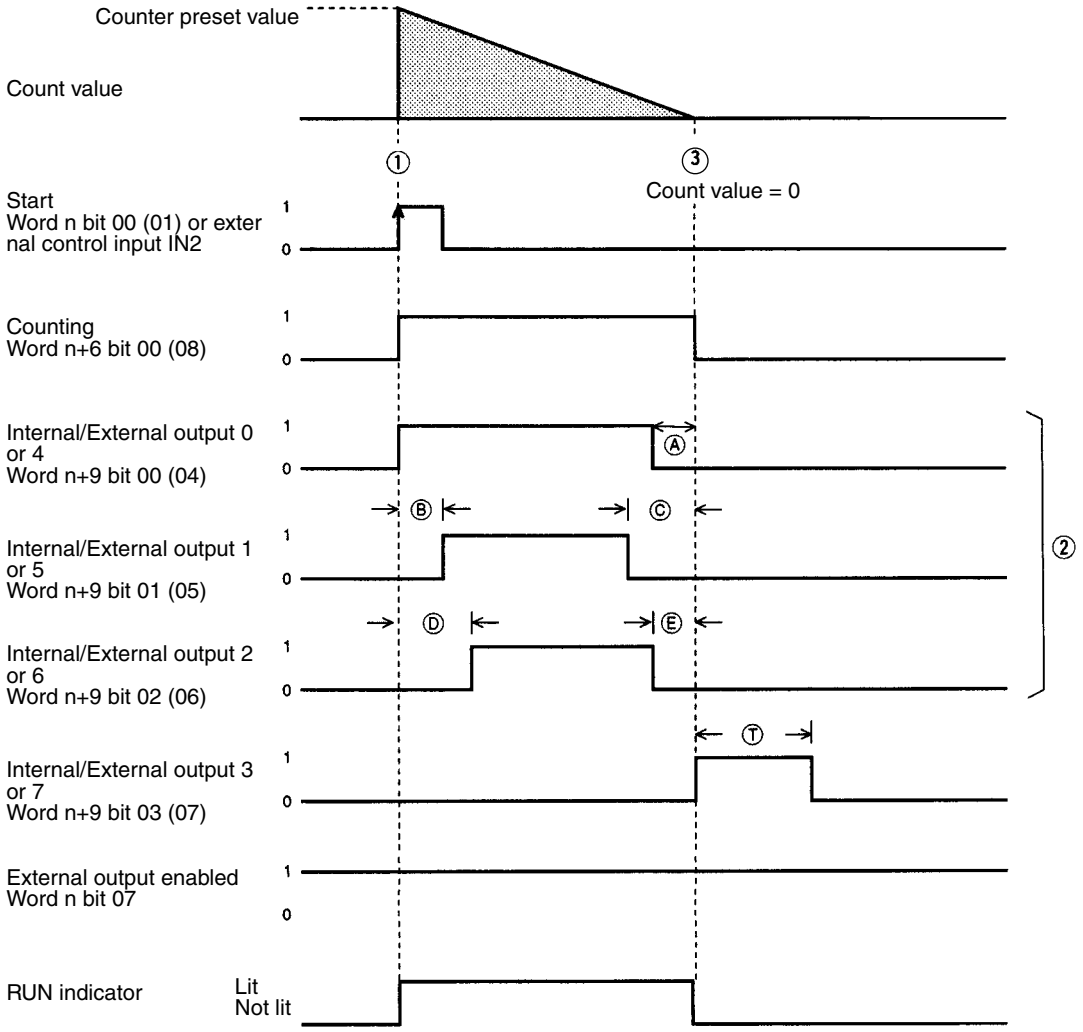

1,2,3...

1. The counter starts at the rising edge of word n bit 00 (01) or external control input IN2.
2. After the counter starts, external outputs 0 to 2 (4 to 6) are turned ON or OFF according to the preset external output ON/OFF count values.
3. The counter will stop counting if the count value reaches 0 and external output 3 (7) will be turned ON for the preset retention time.

Special Operation Values in parentheses are for counter 2.

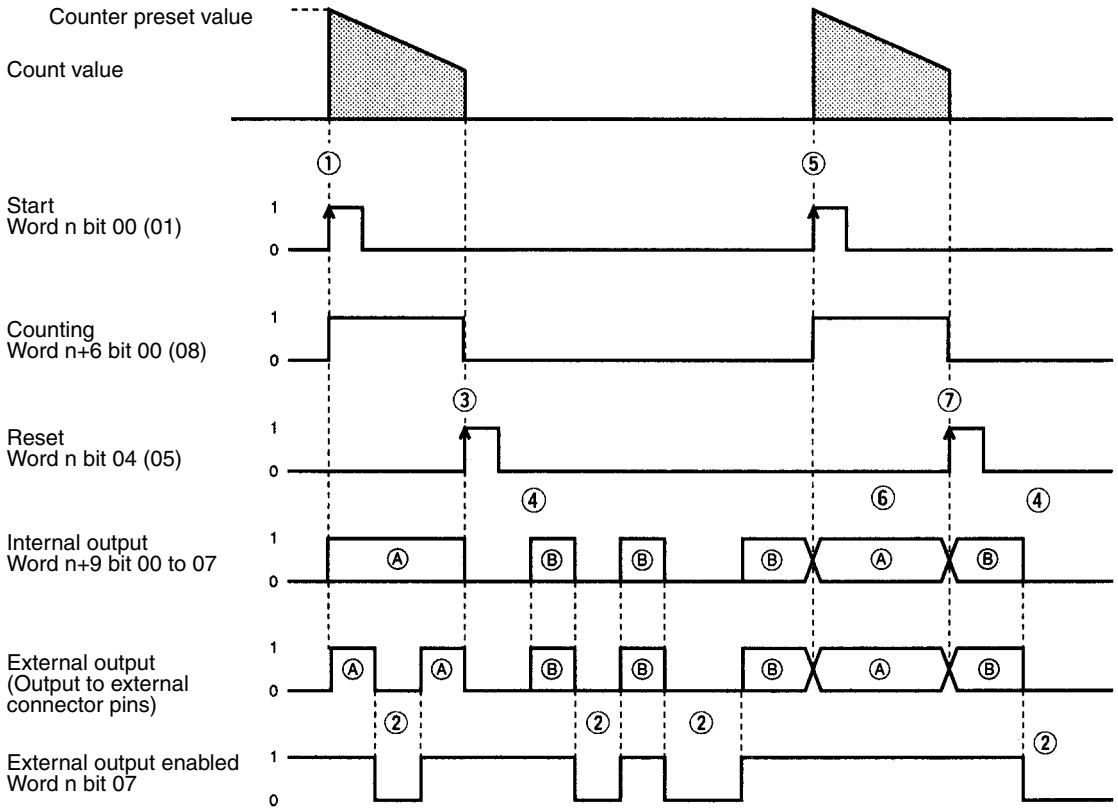

In the above timing chart, (A) indicates normal outputs and (B) indicates forced external outputs provided that the forced external output function is enabled.

1,2,3...

1. The counter is reset or starts at the rising edge of the corresponding bit.
2. Normal external outputs will be prohibited if word n bit 07 for the external output enabled function is set to 0.

   Internal outputs will be turned ON regardless of the setting of this bit.

   Internal and external outputs will be prohibited if this bit is set to 0 while forced external outputs are turned ON.
3. The count value, internal outputs, and external outputs will be reset when the counter in operation is reset.
4. Forced external outputs are enabled while the counter is not operating.
5. The counter will be in normal operation when the counter is started while the forced external outputs of the counter are turned ON.
6. Forced external outputs will be disabled when the counter is in operation.
7. Forced external outputs will be turned OFF the moment the counter is reset but the forced external outputs will be turned ON again.

8-5 Data Transfer Programs

The High-speed Counter Unit usually operates according to a maximum of 20 counter preset values set in the DM area. New counter preset values can be, however, transferred from the PC so that the High-speed Counter Unit can use the new counter preset value.

Note After writing a program, make sure that the program works properly.

8-5-1 Data Transfer Steps

Take the following steps to transfer data.

1, 2, 3... 1. Set the data storage area of the source.
2. Turn ON or restart the High-speed Counter Unit.

Initial settings

3. Set the counter preset values or count value.
4. Execute data transfer.

After turning ON or restarting the High-speed Counter, follow steps 3 and 4 to transfer data.

1,2,3... 1. **Data Storage Area of Source**
Set DM word m+3 and m+4 to the first word number of transfer data, PC data area, and the number of data blocks.

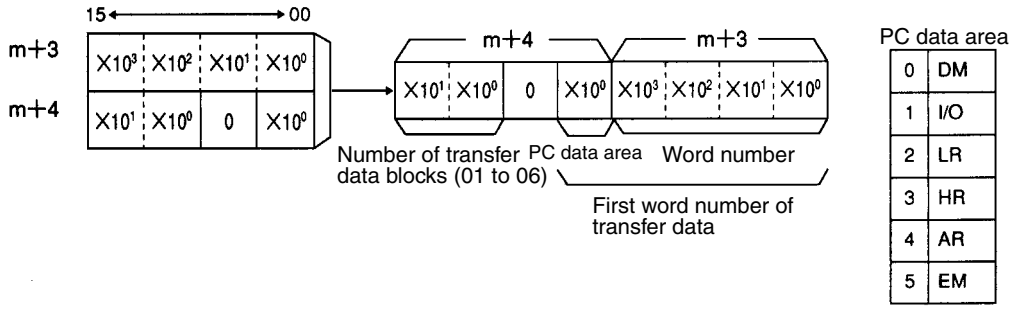

The EM area is available for the C200HX and C200HG PCs.

2. **When Turning ON or Restarting**
Data will be transferred from the PC to the data memory area of High-speed Counter Unit when the High-speed Counter Unit is turned ON or restarted.

3. **Counter Preset Value Setting**
Data can be written to data area or DM area of the PC with ladder programs or the Programming Console.

A transfer data block uses three words. Six counter preset values with preset value numbers can be transferred at a time. Write these counter preset values to consecutive words in the same area.

Transfer Data Format (IR and DM Areas of PC)
N: The first word number of the area set in the PC

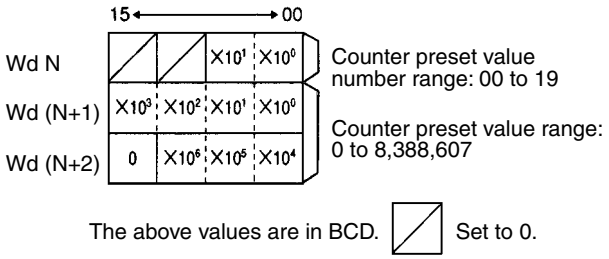

4. **Data Transfer Execution**
Set word n bit 03 to 1 to execute data transfer.

8-5-2 Program Example for Preset Value Change

A preset value is changed with external data transfer switches in the following example.

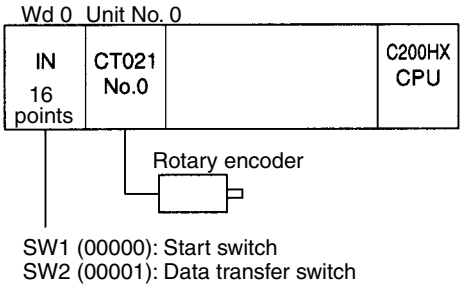

1,2,3... 1. Prepare an area of the source storing the transfer data.

Set as shown in the following diagram because the unit number is 0, the PC data area is the DM, and the number of transfer data blocks is 6.

DM 1003	0	9	0	0	First word number of source
DM 1004	0	6	0	0	Number of transfer data blocks and PC data area

To transfer more than six transfer data blocks, store them in a different area, and move three data blocks to the DM area from DM 0900 to transfer each time. A total of six blocks of transfer data can be transferred at a time.

2. Store the counter preset value data to be used in a DM area that is not used by the Special I/O Unit.

The words must be from DM 0900 on.

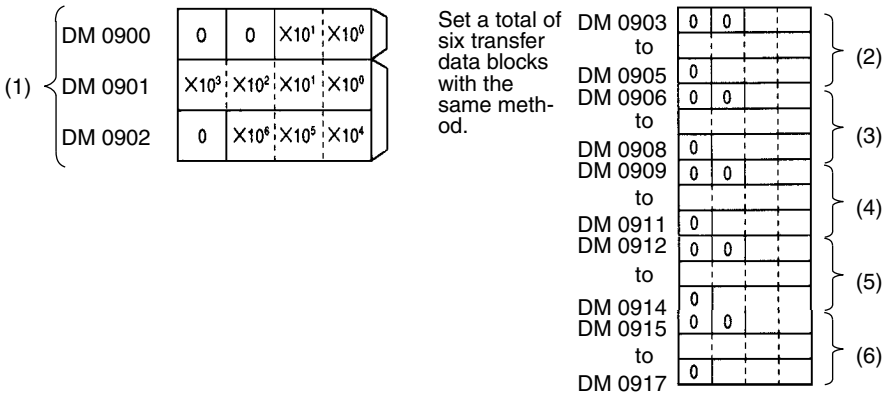

3. Program

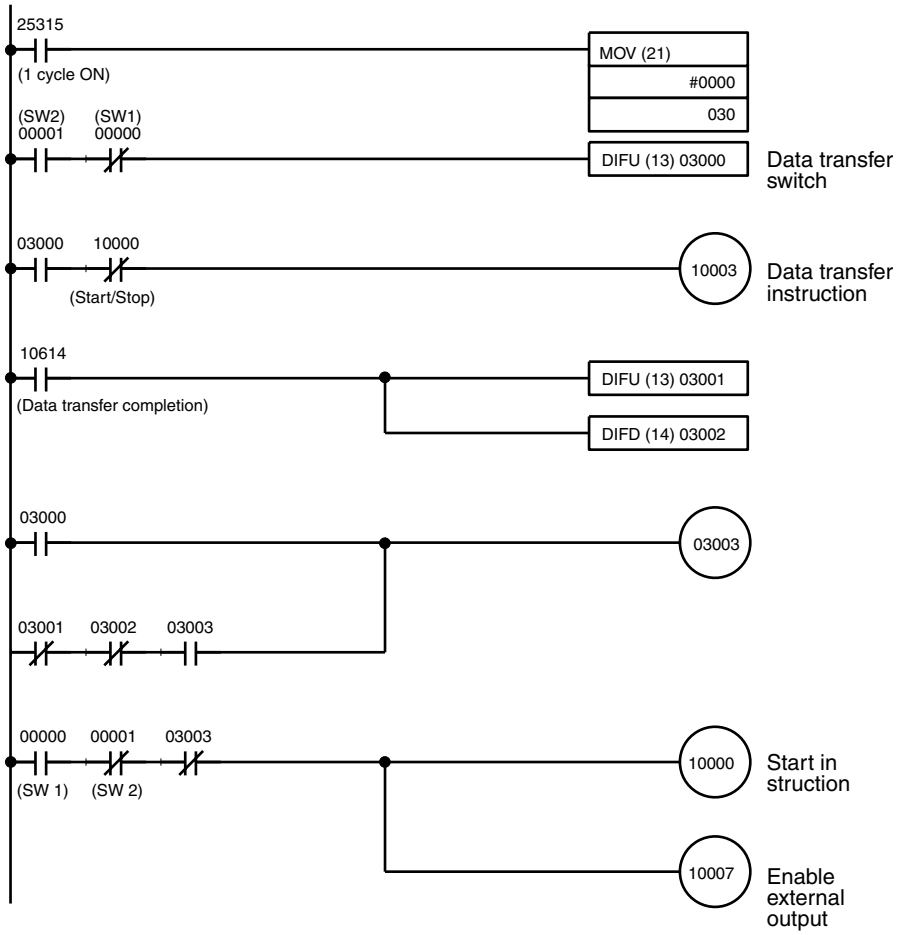
25315
(1 cycle ON)
MOV (21)
#0000
030
(SW2) 00001
(SW1) 00000
DIFU (13) 03000
Data transfer switch
03000
10000
(Start/Stop)
10003
Data transfer instruction
10614
(Data transfer completion)
DIFU (13) 03001
DIFD (14) 03002
03000
03003
03001
03002
03003
00000
00001
03003
(SW 1)
(SW 2)
10000
Start in struction
10007
Enable external output

8-6 Program Example for Preset Mode

This section explains a program example for a system using counter 1 in preset mode.

Note After writing a program, make sure that the program works properly.

System Configuration

Cutting Cable at the Target Position

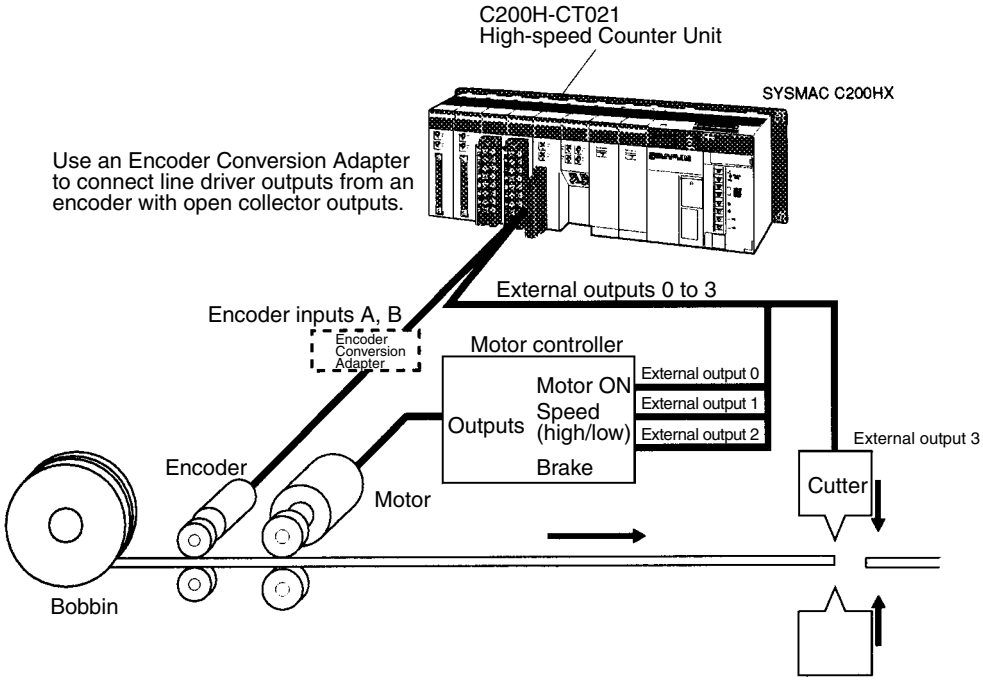

Operation

In this operation, only the prescribed length of cable is fed, and a cutter is activated to cut the cable at the target position.

Control Procedure

1,2,3...

1. The brake is released and the motor is started at low speed.
2. The motor speed is increased.
3. Before reaching the target position, the motor is slowed back to low speed.
4. The motor is stopped ahead of the target position, taking into account the travel distance due to momentum.
5. The brake is turned ON just before the target position.
6. When the target position is reached, the cutter is activated.

Offset phase inputs multiplied by 2 are input to the encoder.
BCD data is used in the system.
The counter is reset at the rising edge of the internal reset (in mode 0).

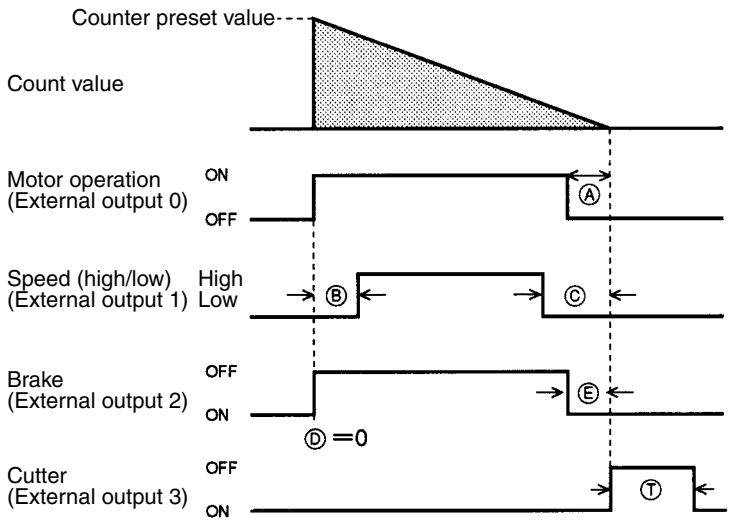

Example Settings

Item	Set value
Counter preset value	10,000
(A)	100
(B)	150
(C)	200
(D)	0
(E)	50
(T)	500 ms

Switch Settings

The unit number of the High-speed Counter Unit is set to 1 and the Unit will have NPN external outputs.

Wiring

The A- and B-phase outputs of the incremental encoder are connected to counter 1 inputs A and B.

Connect external outputs 0 to 2 to the motor ON, speed (high/low), and brake input terminals of the motor controller.

Connect external output 3 to the cutter.

DM Settings

DM 1100	0	0	0	3	Preset mode, external NPN outputs, BCD data, offset phase pulse inputs x 2, and reset mode 0
DM 1101	0	0	0	1	
DM 1110	0	1	0	0	(A) = 100
DM 1111	0	0	0	0	
DM 1112	0	1	5	0	(B) = 150
DM 1113	0	0	0	0	
DM 1114	0	2	0	0	(C) = 200
DM 1115	0	0	0	0	
DM 1116	0	0	0	0	(D) = 0
DM 1117	0	0	0	0	
DM 1118	0	0	5	0	(E) = 50
DM 1119	0	0	0	0	
DM 1120	0	0	5	0	(T) = 500 ms
DM 1150	0	0	0	0	Preset value = 10000
DM 1151	0	0	0	1	

Program Example

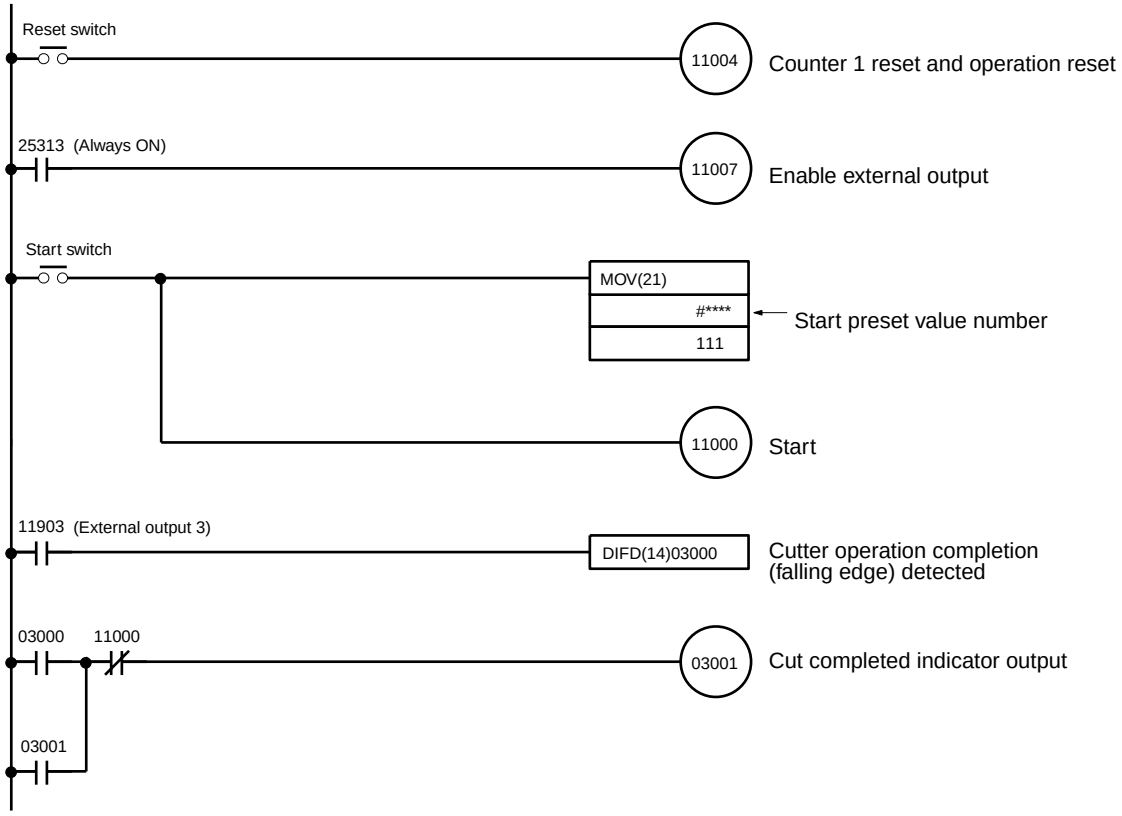

SECTION 9
Program Development with Counting Function

This section describes program development using the counting function in gate, cumulative gate, and sampling modes.

9-1 Performance Specifications of Counting Function. 102
9-2 DM Area Settings and Functions 102
9-3 IR Area Settings and Functions 103
9-4 I/O Signal Timing Chart. 105
9-5 Program Example for Gate Mode. 107
9-6 Program Example for Cumulative Gate Mode 109
9-7 Program Example 1 for Sampling Mode 111
9-8 Program Example 2 for Sampling Mode 112

9-1 Performance Specifications of Counting Function

Refer to the following for the performance specifications of the counting function.

Item		Specification	
Count input signal	Offset phase input	Counter input A (A phase of encoder) Counter input B (B phase of encoder)	
	Up and down pulse input	Counter input A (Down pulse input) Counter input B (Up pulse input)	
	Pulse and direction input	Counter input A (Direction input) Counter input B (Pulse input)	
Count range		–8,388,608 to 8,388,607	
External input		Gate mode	External control input IN1 (Count start)
		Cumulative gate mode	External control input IN1 (Counter reset signal) External control input IN2 (Start and cumulative gate signals)
		Sampling mode	External control input IN1 (Count start)
Set value		Gate mode Cumulative gate mode	---
		Sampling mode	Sampling time: 1 to 9,999 ms Unit: 1 ms Precision: +0 –1 ms
External output signal		---	

9-2 DM Area Settings and Functions

Values can be written to the DM area with ladder programs or the Programming Console.

m = 1000 + 100 x Unit No. (0 to 15)

The values set in the DM area are transferred to the High-speed Counter Unit when the High-speed Counter Unit is turned ON or restarted. Any set value changed while the High-speed Counter Unit is in operation will be transferred to the High-speed Counter Unit when it is turned on again or restarted.

Description

In this manual, the words and bits of counter 1 are described first followed by the words and bits of counter 2.

In the following example, word m+1 and bit 01 are for counter 1 and word m+2 and bit 02 are for counter 2.

Example: Counter input type (Word (m+1) or (m+2) bits 03 to 00)
Counter reset (Word n bits 01 or 02)

Operating Mode (Word m Bits 03 to 00)

Set these bits so that the setting will correspond to the MODE switch setting.

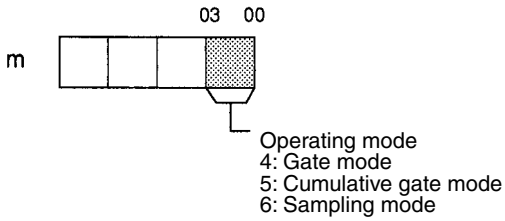

Data Type (Word m Bits 15 to 12)

These bits are used to set the counter value in BCD or hexadecimal.

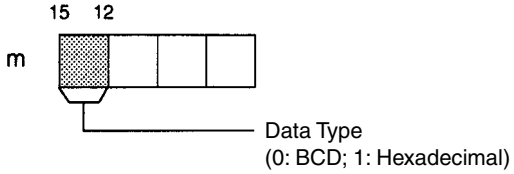

Counter Input Type (Word (m+1) or (m+2) Bits 03 to 00)

Offset phase pulse inputs must be multiplied by 1, 2 or 4.

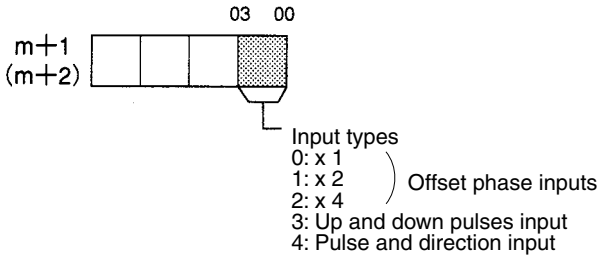

Control Mode (Word (m+1) or (m+2) Bits 04 to 07)

These bits are used to designate external control inputs IN1 and IN2 or internal control input IN1 and IN2 as control inputs IN1 and IN2.

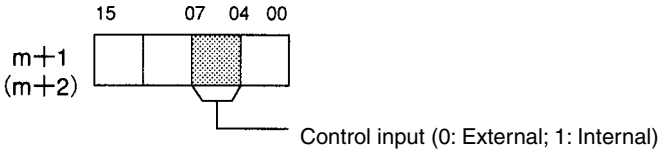

Internal control inputs use the following bits.
Word n bits 08 or 10: Internal control input IN1
Word n bits 09 or 11: Internal control input IN2

9-3 IR Area Settings and Functions

IR bits can be used to check the I/O data of the High-speed Counter Unit, such as commands in use and the status data of the Unit.

n = 100 + 10 x Unit No. (Unit No. 0 to 9)
n = 400 + 10 x (Unit No. – 10) (Unit No. 10 to 15)

Output data means any data output from the PC to the High-speed Counter Unit and input data means any data input from the High-speed Counter Unit to the PC.

Set Time (Word n Bits 01 or 02)

These bits are used only for sampling mode. The sampling time set in word n+1 is enabled at the rising edge of bit 01 or 02.

If bit 01 or 02 is turned ON while the High-speed Counter Unit is operating, the sampling time will be set after the Unit stops counting.

Sampling Time (Word n+1)

The sampling time can be set in sampling mode only.

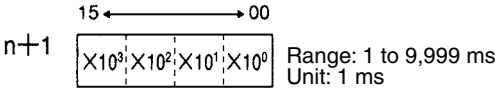

To set the two counters to sampling times different to each other, the sampling times must be set during two I/O refresh cycles of the PC.

Set counter 1 to a sampling time by setting word n bit 01 to 1 and bit 02 to 0 and then set counter 2 by setting word n bit 01 to 0 and bit 02 to 1.

Counters 1 and 2 will be set to the same sampling time if word n bits 01 and 02 are set to 1.

Internal Control IN1 (Word n Bits 08 or 10) Internal Control IN2 (Word n Bits 09 or 11)

These bits will be used as control input signals if internal control IN1 and IN2 are set in word m+1 bits 04 to 07 and word m+2 bits 04 to 07.

Control input IN1 is used to start the High-speed Counter Unit in gate and sampling modes. At the rising edge of the control input IN1, the counter value is reset and the Unit is started.

The count value is reset at the rising edge of control input IN1 in cumulative gate mode.

The counter starts counting at the rising edge of control input IN2 in cumulative gate mode. The counter stops counting at the falling edge of control input IN2 and the count value is kept on hold.

The counter is in operation again at the rising edge of control input IN2, starting from the count value kept on hold.

Read Error (Word n Bit 06)

If an error results, the Error Flag (word n+6 bit 15) will be set to 1, at which time the error codes will be output to word n+7 when word n bit 06 is set to 1.

The error data is set to 0 when all the error data is read. Repeatedly turn this bit ON until the error data is set to 0.

Error Data:

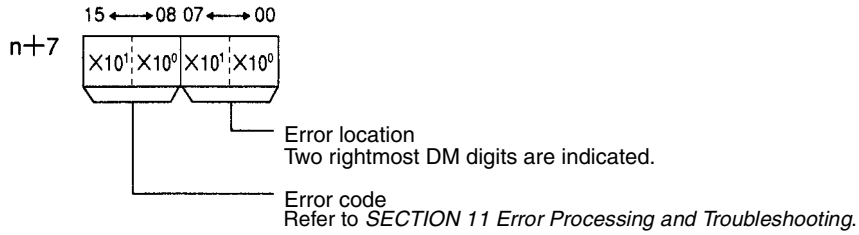

Present Counter Value (Words (n+2) and (n+3) or (n+4) and (n+5))

These words are used to store the present counter values of the counters.

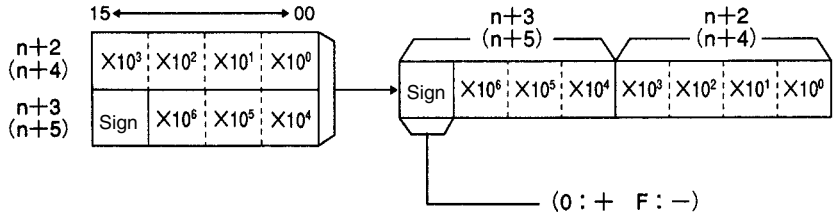

The above is a setting example in BCD.
The following data is stored.

BCD: –8,388,608 to 8,388,607

Hexadecimal: 800000 to FFFFFF (–8,388,608 to –1) and 000000 to 7FFFFF (0 to 8,388,607)

Status Data (Word n+6)

The status of the High-speed Counter Unit is transferred to the PC.

Bit	Flag		Function
00	Counter 1	Counting	Set to 1 when the counter is counting.
01		Input Z	Indicates the status of input Z.
02		Control input IN1	Indicates the status of external control input IN1. External control inputs IN1 and IN2 must be turned ON for a period longer than the PC's cycle time so that the PC can properly read the status of external control inputs IN1 and IN2.
03		Control input IN2	Indicates the status of external control input IN2. 1: ON 0: OFF
04		Counter overflow	Set to 1 when the count value is not within a range of –8,388,608 and 8,388,607. Reset the counter with control input IN1 or restart the counter when this bit is set to 1.
05	---		Not used
06	Counter operating		Set to 1 and the RUN indicator is lit while either of the counters is counting.
07	Unit busy		Set to 1 while the IOWR instruction is processed for the C200HX, C200HG, or C200HE PC or the Unit is restarted or initialized.
08	Counter 2	Counting	Refer to the information on the above counter 1
09		Input Z	
10		Control input IN1	
11		Control input IN2	
12		Counter overflow	
13	---		Not used
14	Data transfer completion		Set from 0 to 1 or vice versa when the Unit has completed processing the IOWR instruction.
15	Error		Set to 1 when an error results.

9-4 I/O Signal Timing Chart

Refer to the following for the relationship between input and output bits in gate, cumulative gate, and sampling modes.

Gate Mode

Values in parentheses are for counter 2.

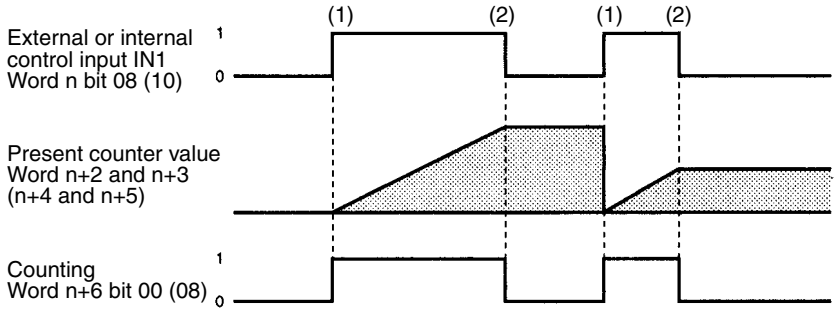

1,2,3...

1. The counter resets the count value and starts counting at the rising edge of control input IN1.
2. The counter stops counting at the falling edge of control input IN1 and the count value is kept on hold until the counter restarts.

Cumulative Gate Mode

Values in parentheses are for counter 2.

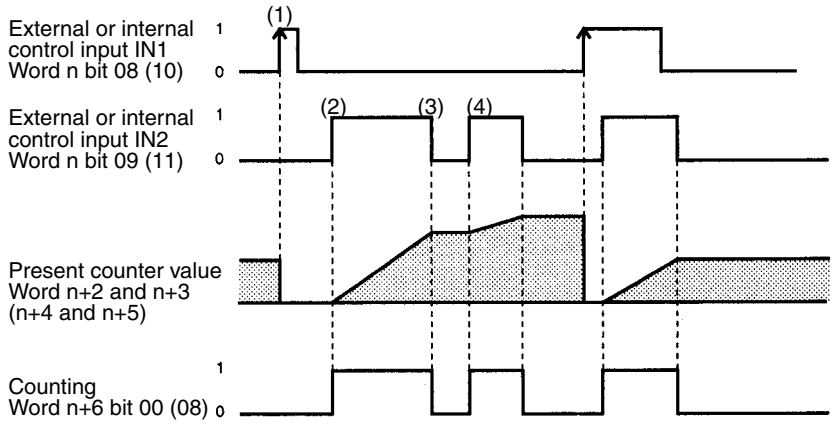

1,2,3...

1. The counter resets the count value at the rising edge of control input IN1.
2. The counter starts counting at the rising edge of control input IN2.
3. The counter stops counting at the falling edge of control input IN2 and the count value is kept on hold until the counter restarts.
4. The counter is in operation again at the rising edge of control input IN2, starting from the count value kept on hold.

Sampling Mode

Values in parentheses are for counter 2.

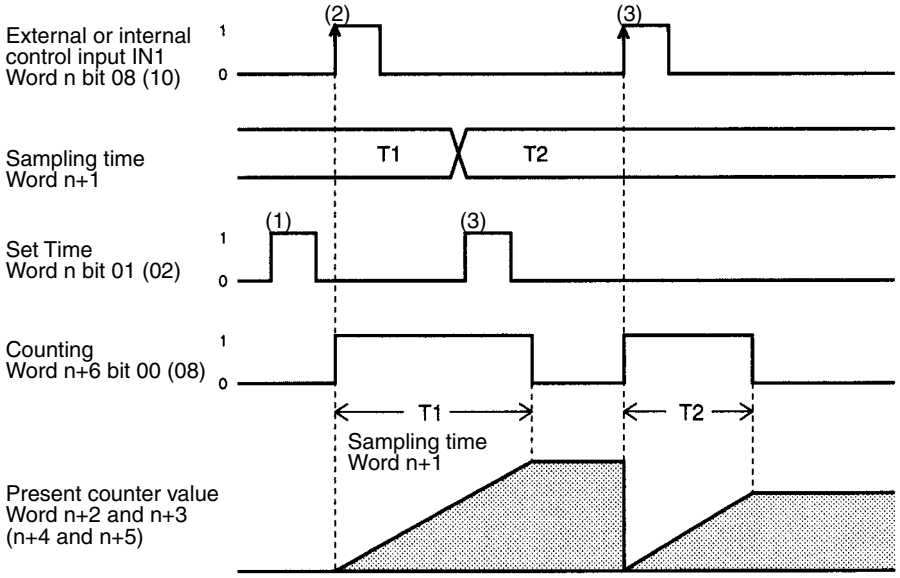

1,2,3...

1. The sampling time must be set in word n+1 before the counter starts counting.

   The sampling time must be set by turning word n bit 01 or 02 ON.
2. The counter resets the count value and starts counting at the rising edge of control input IN1. The counter stops counting after the sampling time elapses.

   The count value is kept on hold until the counter restarts.
3. If the new sampling time is set and word n bit 01 or 02 is turned ON while the counter is counting, the new sampling time will be enabled after the counter stops counting.

9-5 Program Example for Gate Mode

This section explains a program example for a system using the High-speed Counter Unit in gate mode.

Note After writing a program, make sure that the program works properly.

System Configuration

Measuring Product Dimensions

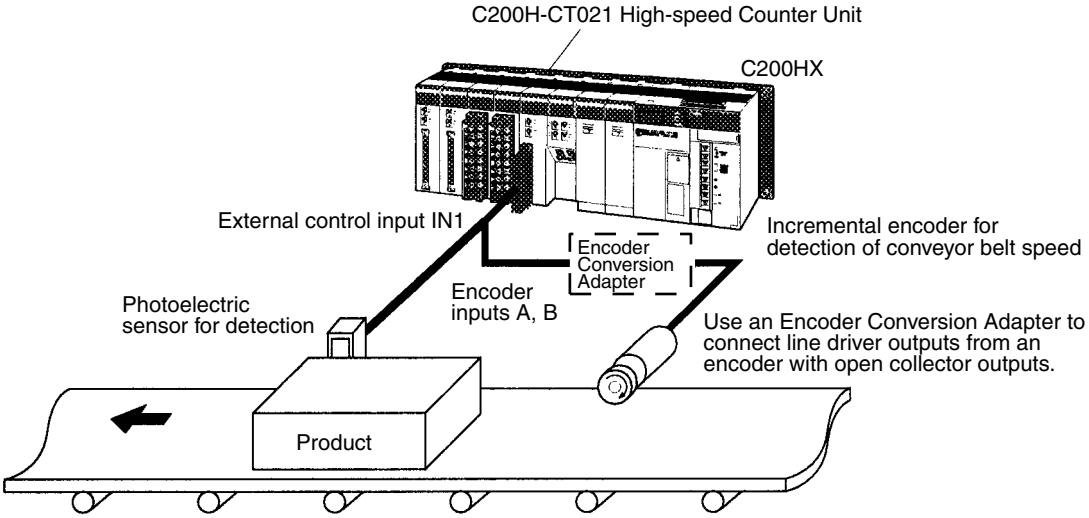

Operation

Encoder inputs are counted while the photoelectric sensor is ON, and the dimensions of products moving along the conveyer belt are measured. The PC determines whether or not those dimensions are acceptable.

The value in the parentheses is for counter 2.

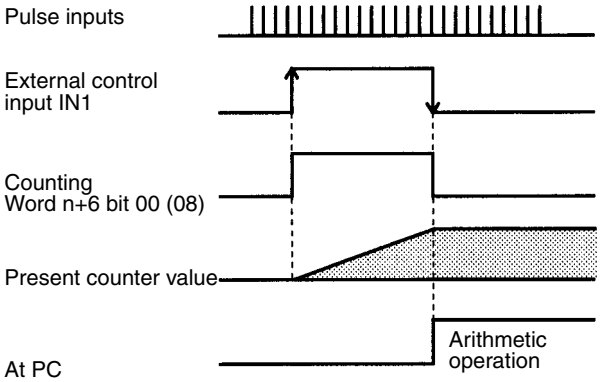

Offset phase inputs multiplied by 1 are input to the encoder.
BCD data and external control input IN1 are used in the system.

Switch Settings

The unit number of the High-speed Counter Unit is set to 1.

Wiring

The A- and B-phase outputs of the incremental encoder are connected to counter 1 inputs A and B.

Connect the outputs of the photoelectric sensor to external control input IN1.

DM Settings

DM 1100	0	0	0	4	Gate mode, BCD data, offset phase pulse inputs x 1, and external control input mode
DM 1101	0	0	0	0	

Program Example

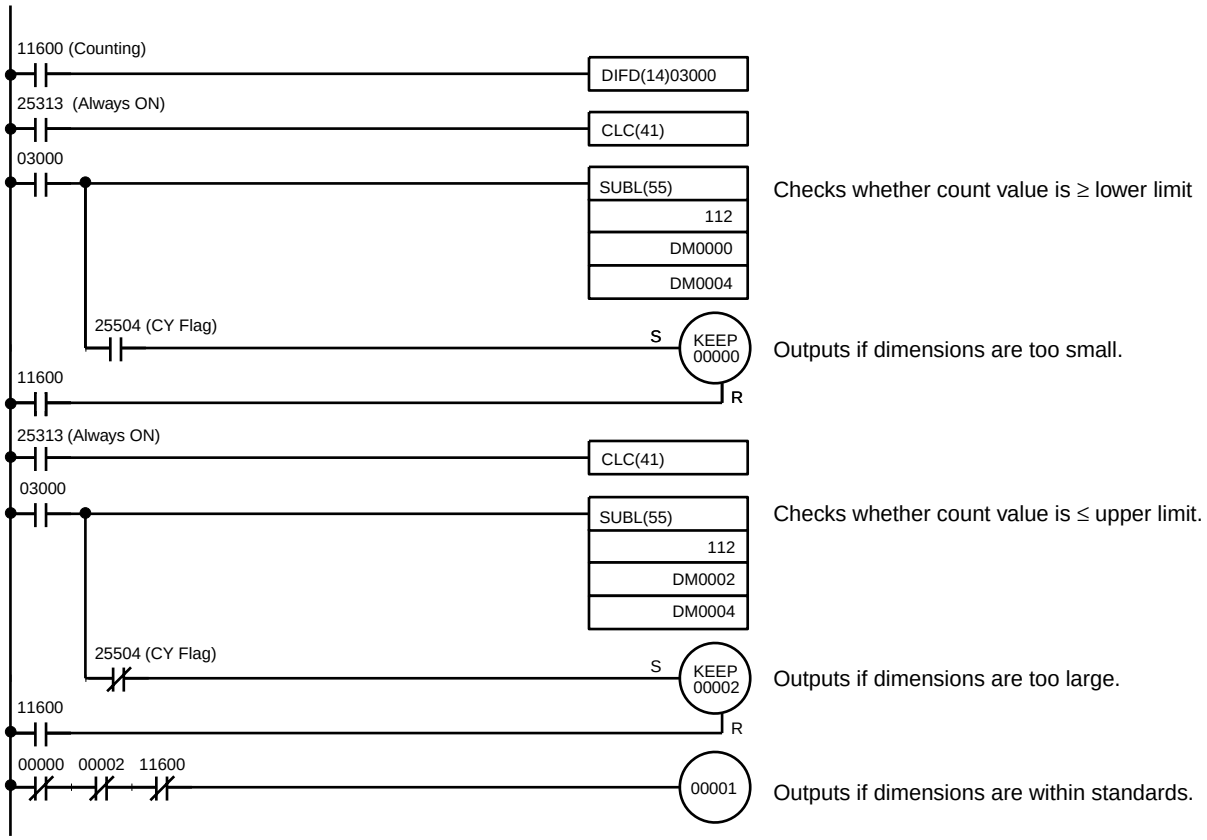

Comparison Data Areas

DM 0000 DM 0001	Lower limit
DM 0002 DM 0003	Upper limit
DM 0004 DM 0005	Work

Output Results

00000 ON	Dimensions too small
00001 ON	Dimensions correct
00002 ON	Dimensions too large

9-6 Program Example for Cumulative Gate Mode

This section explains a program example for a system using the High-speed Counter Unit in cumulative gate mode.

Note After writing a program, make sure that the program works properly.

System Configuration

Detecting Incorrectly Processed Products

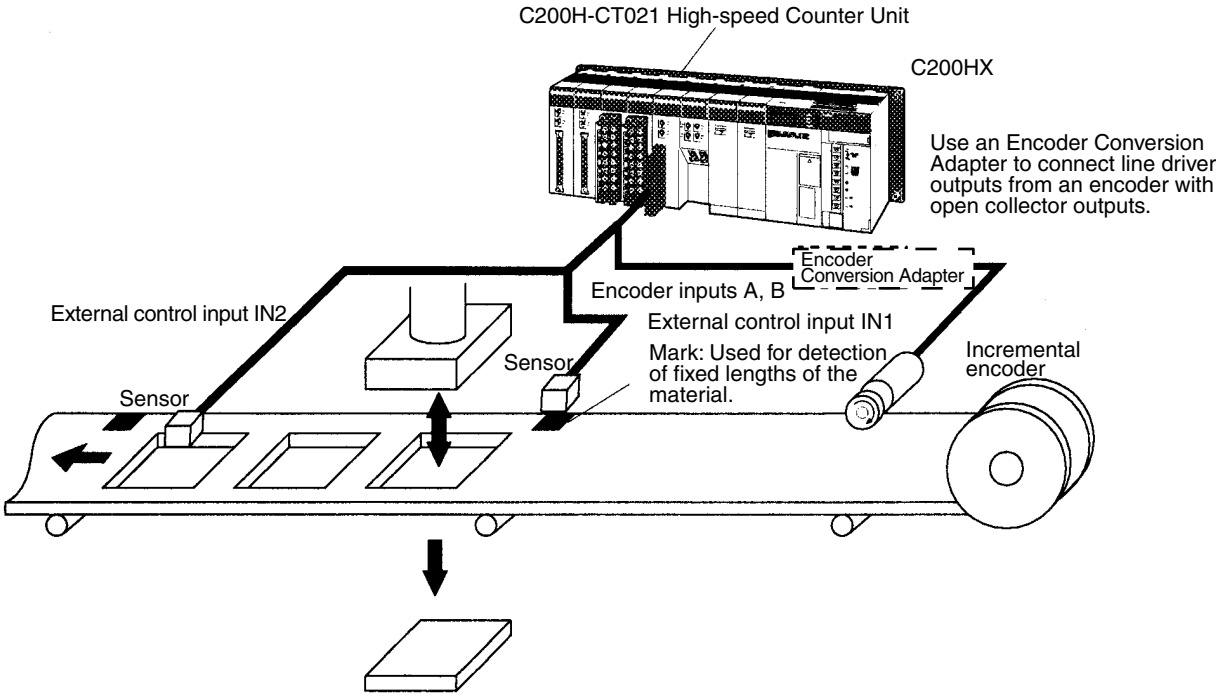

Operation

This system detects incorrectly processed products.

Encoder inputs are counted while the photoelectric sensor is ON. After the material is fed for a fixed length, the PC determines whether or not the length is acceptable. External control inputs are used as control inputs. The count value is reset when the mark is detected.

The value in the parentheses is for counter 2.

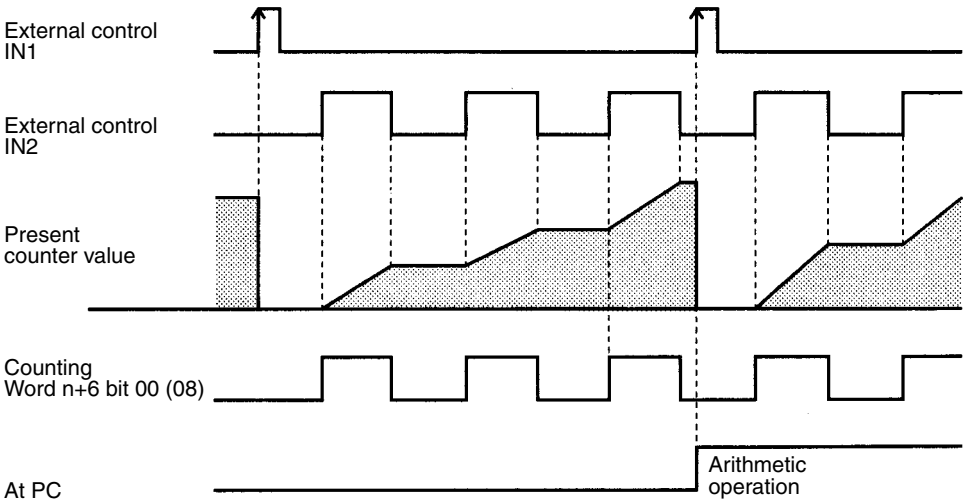

Offset phase inputs multiplied by 1 are input to the encoder.
BCD data is used in the system.
The counter is reset when external control input IN1 is turned ON.

Switch Settings

The unit number of the High-speed Counter Unit is set to 1.

Wiring

The A- and B-phase outputs of the incremental encoder are connected to counter 1 inputs A and B.

Connect the outputs of the photoelectric sensor to external control input IN2.

DM Settings

DM 1100	0	0	0	5
DM 1101	0	0	0	0

Cumulative gate mode, BCD data, offset phase pulse inputs x 1, and external control inputs

Program Example

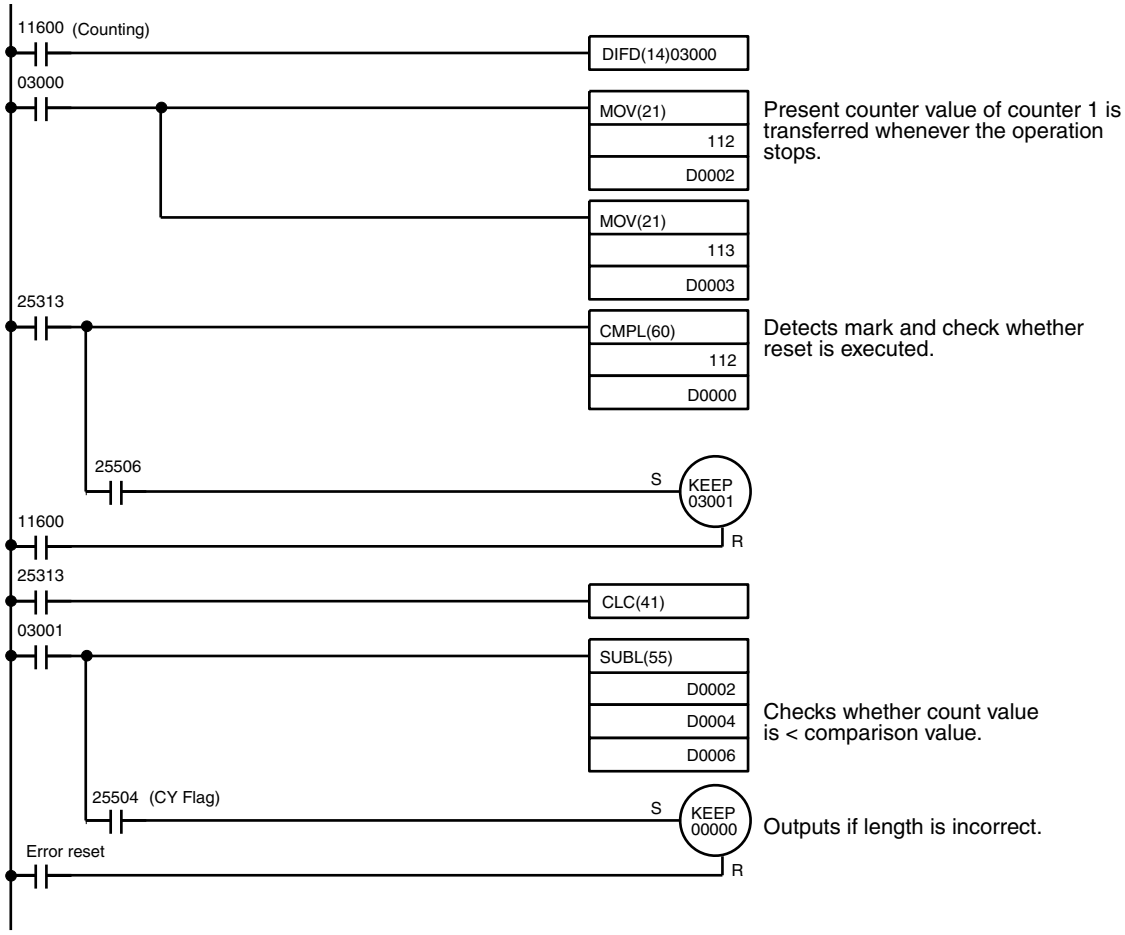

Comparison Data Areas

DM 0000	0000 0000
to	Count value
	Comparison value
DM 1007	Work

Results

00000 ON	Length incorrect
00000 OFF	Length correct

9-7 Program Example 1 for Sampling Mode

This section explains a program example for a system using the High-speed Counter Unit in sampling mode.

Note After writing a program, make sure that the program works properly.

System Configuration

Weight Measurement

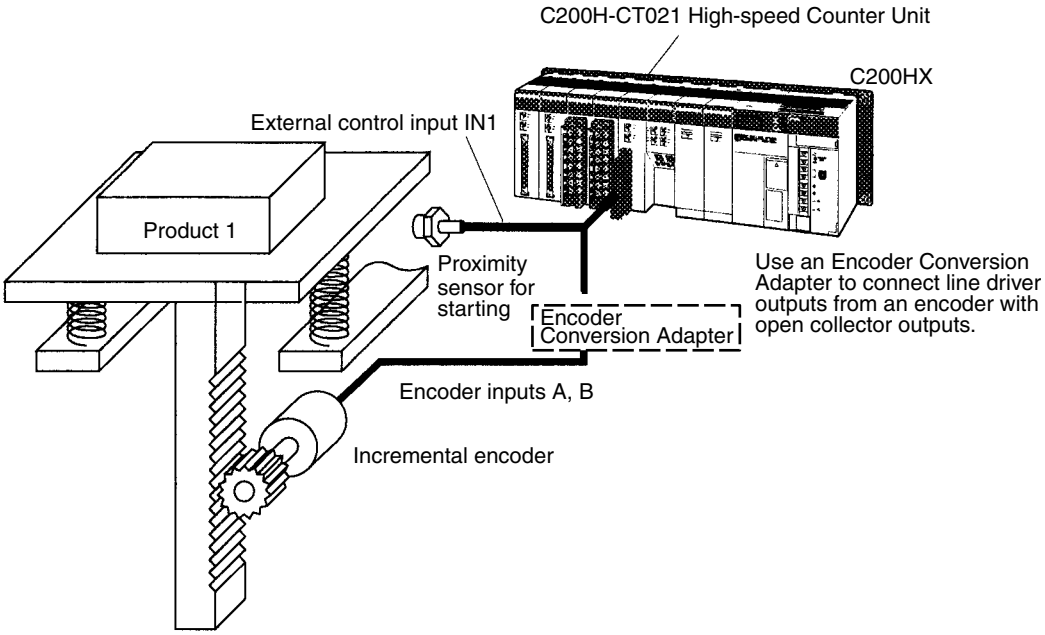

Operation

After product 1 is loaded on the scale, the count value is read in a short interval, in which the oscillations from the scale's springs will die out and an accurate count value can be obtained.

The value in the parentheses is for counter 2.

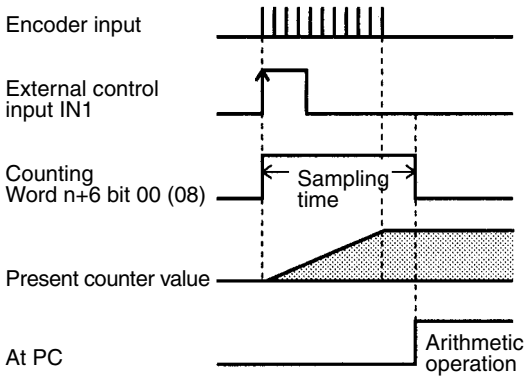

Offset phase inputs multiplied by 4 are input to the encoder to keep the precision of the system.
BCD data is used in the system.
External control input IN1 is used.

Switch Settings

The unit number of the High-speed Counter Unit is set to 1.

Wiring

The A- and B-phase outputs of the incremental encoder are connected to counter 1 inputs A and B.

Connect the outputs of the proximity sensor to external control input IN1.

DM Settings

DM 1100	0	0	0	6
DM 1101	0	0	0	2

Sampling mode, BCD data, offset phase pulse inputs x 4, and external control inputs

Program Example

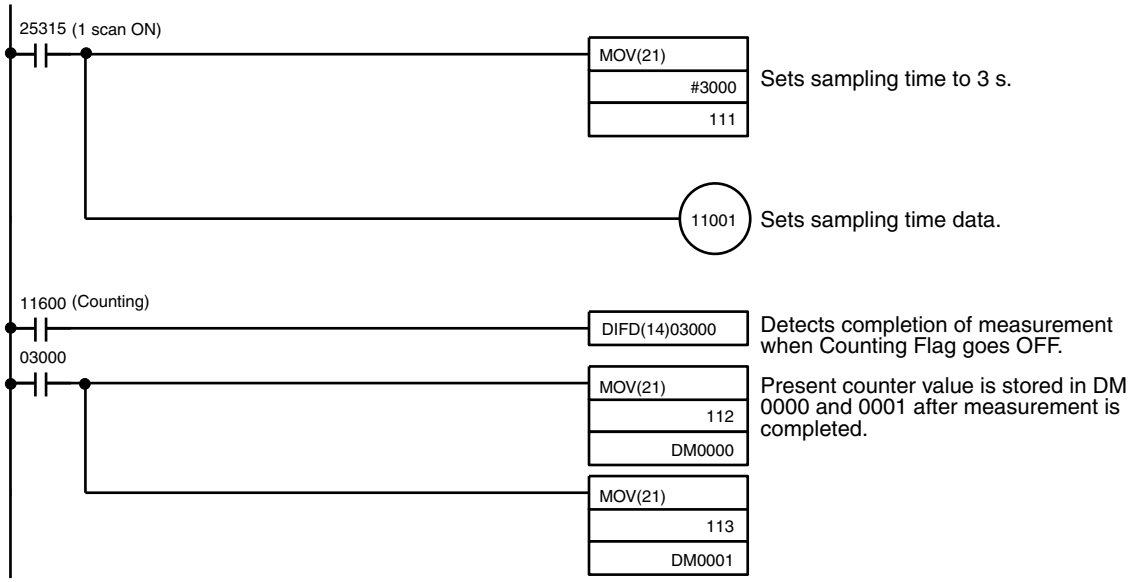

9-8 Program Example 2 for Sampling Mode

Note After writing a program, make sure that the program works properly.

System Configuration Speed Measurement (Tachometer)

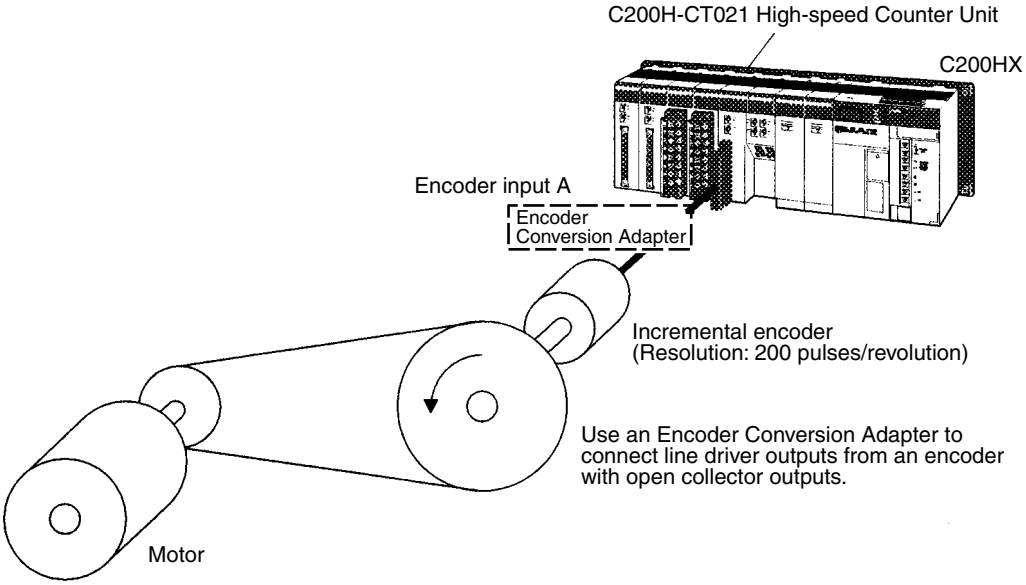

Operation Pulses from the incremental encoder coupled to the rotating axis are measured at fixed intervals and the PC converts these measurements to rotational speed (rpm).

The value in the parentheses is for counter 2.

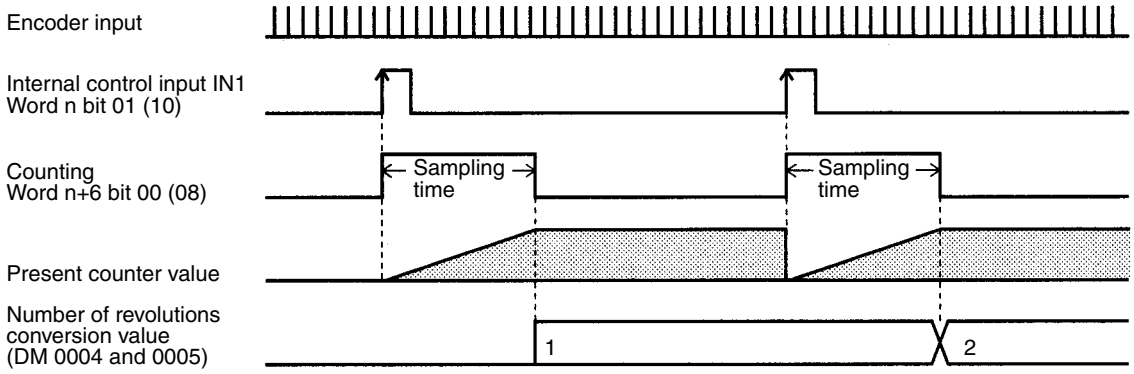

Number of revolutions conversion

$$\text{rpm} = \frac{\text{Number of pulses/s} \times 60}{\text{Number of pulses/revolution}} \ (\text{rpm}) = P \times \frac{60}{200} = P \times \frac{3}{10}$$

Encoder input is given in the positive (+) pulse direction.
BCD data is used in the system.
Internal control input IN1 is used.

Switch Settings

The unit number of the High-speed Counter Unit is set to 1.

Wiring

The incremental encoder output is connected to counter 1 input B. Nothing is connected to counter 1 input A. The forward direction is used.

DM Settings

DM 1100	0	0	0	6	Sampling mode, BCD data, pulse and direction inputs, and internal control input IN1
DM 1101	0	0	1	4	

Program Example

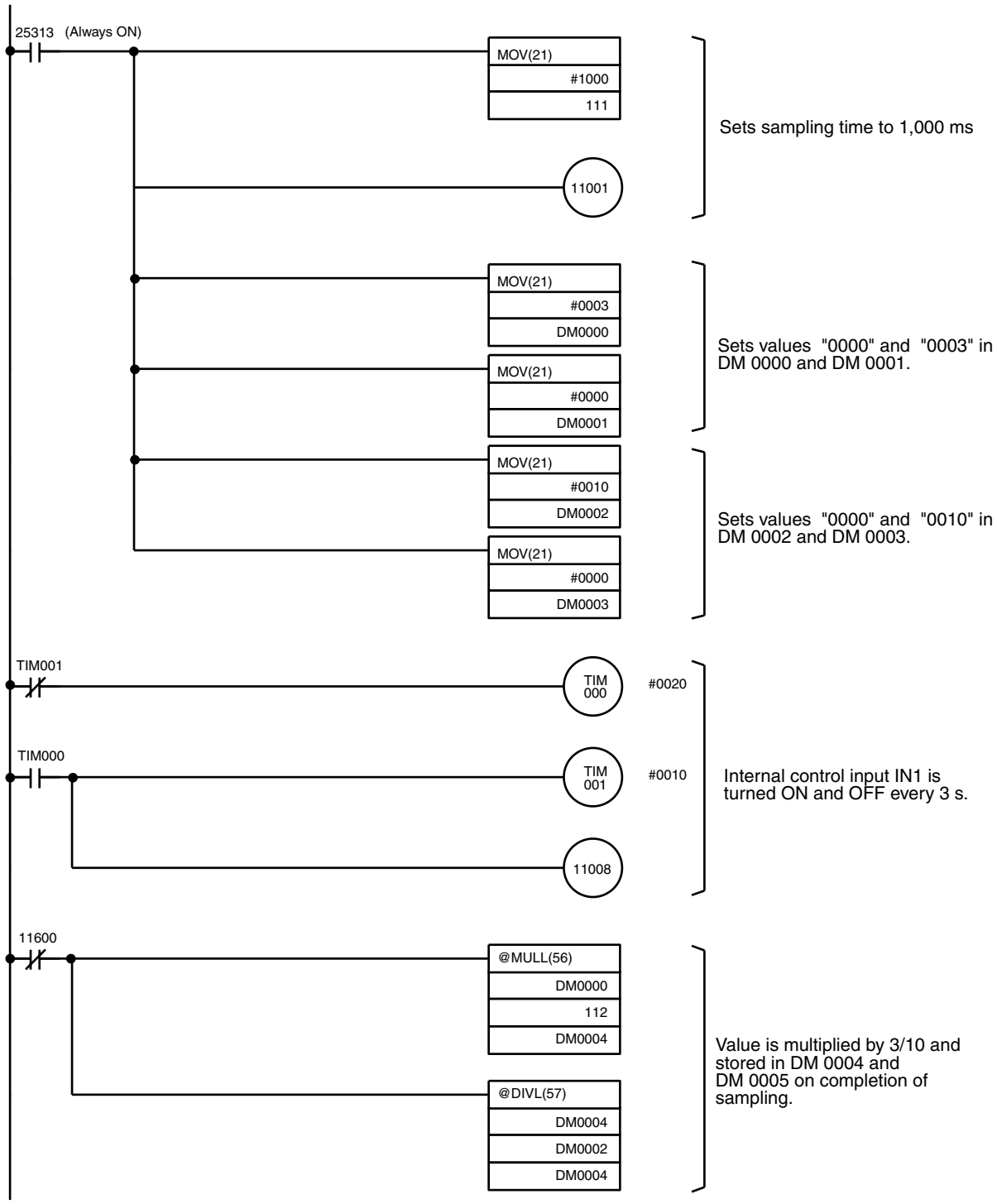

SECTION 10
Using IORD and IOWR Instructions

The IORD and IOWR instructions are enabled with the C200HE, C200HG, or C200HX PCs.
These instructions make it possible to read data from the DM area allocated to the High-speed Counter Unit when it is turned ON or restarted, change the present counter value, or change values set in the High-speed Counter Unit.
The IORD and IOWR instructions can be used only if word n+6 bit 06 is set to 0 (i.e., the High-speed Counter Unit is not operating).

10-1 IORD and IOWR Instructions 116
10-1-1 IORD Instruction 116
10-1-2 IOWR Instruction 117
10-2 Control Codes of IORD and IOWR Instructions 119
10-3 Types of Data Written with IOWR Instruction 121
10-4 Program Examples with IORD Instruction 123
10-5 Program Examples with IOWR Instruction 124
10-6 Flags Used for IOWR Instruction and Data Transfer 126

10-1 IORD and IOWR Instructions

This section explains the configurations of the IORD and IOWR instructions.

10-1-1 IORD Instruction

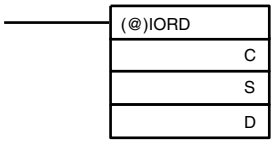

C: Control code
S: Source unit number and number of words
D: Destination address

C: Control Code

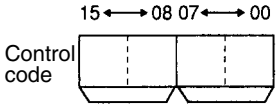

Bits 15 to 08	Bits 07 to 00	Description
00	00 to 15	Ranges 0 to 15 are read in linear or circular mode.
	00 to 19	Counter preset values 0 to 19 are read in preset mode.
CC	00 to 99	By specifying the word number of the DM area, data can be read in a word range m to m+99 from the High-speed Counter Unit.

Examples:

Set C to 0005 to read range 5 in linear or circular mode.

Set C to 0019 to read counter preset value 19 in preset mode.

Set C to CC00 to read the operating mode set in word m in linear or circular mode.

S: Source Unit Number and Number of Words

Set a source unit number (0 to F) in bits 15 to 12.

Set in bits 11 to 00 the number of words from which data is read.

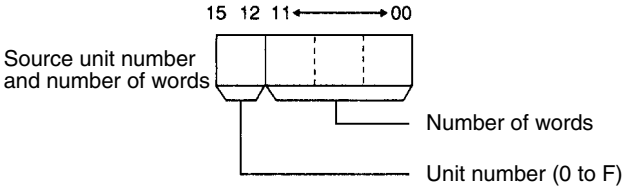

Control Code 00XX

A set of upper and lower limits in circular or linear mode uses five words. Therefore a block of five words must be set.

A counter preset value in preset mode uses two words. Therefore a block of two words must be set.

Example:
Set C to 0005 and S to F005 to read range 5 of Unit F in linear or circular mode.

Control Code CCXX

A total of 1 to 99 words can be specified. Specify the total number of words from which data is read.

Example:
Set C to CC00 and S to F001 to read the operating mode set in word m of Unit F in linear or circular mode.

D: Destination Address

Set a data area of the PC that stores the data read from the High-speed Counter Unit.

Example:
Set C to 0005, S to F005, and D to D0100 to read range 5 of Unit F from DM 0100 in linear or circular mode.

10-1-2 IOWR Instruction

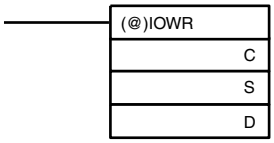

C: Control code
S: Source address
D: Destination unit number and number of words

C: Control Code

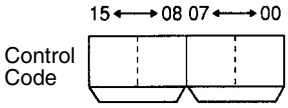

Bits 15 to 08	Bits 07 to 00	Description
00	00 to 15	Ranges 0 to 15 are written in linear and circular modes.
	00 to 19	Counter preset values 0 to 19 are written in preset mode.
CC	00 to 99	By specifying the word number of the DM area, data can be written in a word range m to m+99 of the High-speed Counter Unit.
F1	00	The present counter value of counter 1 is written. Set 00 in bits 07 to 00.
F2		The present counter value of counter 2 is written. Set 00 in bits 07 to 00.
F3		The present counter values of counters 1 and 2 are written. Set 00 in bits 07 to 00.
EC	00	An error is cleared.

Examples:
Set C to 0005 to write range 5 in linear or circular mode.

Set C to 0019 to write counter preset value 19 in preset mode.

Set C to CC07 to write the maximum count value of counter 1 in circular mode to words m+7 and m+8.

Destination Unit Number and Number of Words

Set a destination unit number (0 to F) in bits 15 to 12.

Set in bits 11 to 00 the number of words to which data is written.

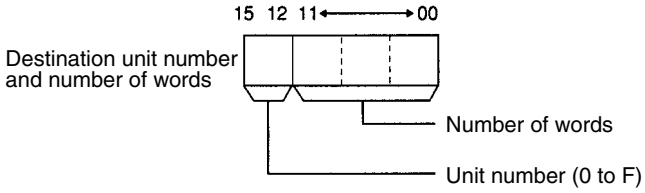

Control Code 00XX

A set of upper and lower limits in circular or linear mode uses five words. Therefore a block of five words must be set.

A counter preset value in preset mode uses two words. Therefore a block of two words must be set.

Example:
Set C to 0005 and D to F005 to write range 5 of unit F in linear or circular mode.

Control Code CCXX

A total of 1 to 99 words can be specified. Specify the total number of words to which data is written.

Example:
Set C to CC07 and D to F002 to write the maximum count value of counter 1 in circular mode to words m+7 and m+8.

Control Codes F100, F200, and F300

F1 or F2 is used to write the present counter value of counter 1 or 2. Set D to X002 because each of them uses two words.

F3 is used to write the present counter values of both counters 1 and 2. Set D to X004 because F3 uses four words.

Example:
Set C to F100 and D to F002 to write the present counter value of counter 1 of unit number F in linear or circular mode.

Set C to F300 and D to 1004 to write the present counter values of counters 1 and 2 of unit number 1 in linear or circular mode.

S: Source Address

Set a data area of the PC that stores data written to the High-speed Counter Unit.

Example:
Set C to 0005, S to D0100, and D to F005 to write range 5 of Unit F stored in DM 0100 in linear or circular mode.

Control Code EC00

Example:
Set C to EC00, S to 000, and D to 0001 to transfer the error clear command.

10-2 Control Codes of IORD and IOWR Instructions

This section describes how the control codes of the IORD and IOWR instructions are used in each mode.

Simple Counter Mode

OK: Possible
NG: Not possible

DM	Set item	IORD instruction control code		IOWR instruction control code		
		#00XX	#CCXX	#00XX	#CCXX	#FX00
		---	XX = 0 to 99	---	XX = 0 to 99	X = 1, 2, 3
m	Operating mode	NG	OK	NG	NG	---
Present counter value		---	---	---	---	OK

Linear and Circular Modes

OK: Possible
NG: Not possible

DM	Set item	IORD instruction control code		IOWR instruction control code		
		#00XX	#CCXX	#00XX	#CCXX	#FX00
		XX = 0 to 15	XX = 0 to 99	XX = 0 to 15	XX = 0 to 99	X = 1, 2, 3
m	Operating mode	NG	OK	NG	NG	---
m+1	Counter 1 input	NG	OK	NG	NG	---
m+2	Counter 2 input	NG	OK	NG	NG	---
m+3	First word number of block of words storing data transferred	NG	OK	NG	OK	---
m+4	Number of data blocks transferred	NG	OK	NG	OK	---
m+5	Counter 1 ranges enabled	NG	OK	NG	OK	---
m+6	Counter 2 ranges enabled	NG	OK	NG	OK	---
m+7 to m+8	Counter 1 maximum count value	NG	OK	NG	OK	---
m+9 to m+10	Counter 2 maximum count value	NG	OK	NG	OK	---
m+11 to m+14	Not used	NG	OK	NG	OK	---
m+15 to m+19 ~ m+90 to m+94	Ranges 0 to 15	OK	OK	OK	OK	---
m+95 to m+99	Not used	NG	OK	NG	OK	---
Present counter value		---	---	---	---	OK

Preset Mode

OK: Possible
NG: Not possible

DM	Set item	IORD instruction control code		IOWR instruction control code		
		#00XX	#CCXX	#00XX	#CCXX	#FX00
		XX = 0 to 19	XX = 0 to 99	XX = 0 to 19	XX = 0 to 99	---
m	Operating mode	NG	OK	NG	NG	---
m+1	Counter 1 input	NG	OK	NG	NG	---
m+2	Counter 2 input	NG	OK	NG	NG	---
m+3	First word number of block of words storing data transferred	NG	OK	NG	OK	---
m+4	Number of data blocks transferred	NG	OK	NG	OK	---
m+5 to m+9	Not used	NG	OK	NG	OK	---
m+10 to m+11	External output 0 OFF count value	NG	OK	NG	OK	---
m+12 to m+13	External output 1 ON count value	NG	OK	NG	OK	---
m+14 to m+15	External output 1 OFF count value	NG	OK	NG	OK	---
m+16 to m+17	External output 2 ON count value	NG	OK	NG	OK	---
m+18 to m+19	External output 2 OFF count value	NG	OK	NG	OK	---
m+20	External output 3 ON hold time	NG	OK	NG	OK	---
m+21 to m+29	Not used	NG	OK	NG	OK	---
m+30 to m+31	External output 4 OFF count value	NG	OK	NG	OK	---
m+32 to m+33	External output 5 ON count value	NG	OK	NG	OK	---
m+34 to m+35	External output 5 OFF count value	NG	OK	NG	OK	---
m+36 to m+37	External output 6 ON count value	NG	OK	NG	OK	---
m+38 to m+39	External output 6 OFF count value	NG	OK	NG	OK	---
m+40	External output 7 ON hold time	NG	OK	NG	OK	---
m+41 to m+49	Not used	NG	OK	NG	OK	---
m+50 to m+51, to m+80 to m+89	Counter preset values 0 to 19	OK	OK	OK	OK	---
m+91 to m+99	Not used	NG	OK	NG	OK	---
Present counter value		---	---	---	---	NG

Gate, Cumulative Gate, and Sampling Modes

OK: Possible
NG: Not possible

DM	Set item	IORD instruction control code		IOWR instruction control code		
		#00XX	#CCXX	#00XX	#CCXX	#FX00
		---	XX = 0 to 99	---	XX = 0 to 99	---
m	Operating mode	NG	OK	NG	NG	---
m+1	Counter 1 input	NG	OK	NG	NG	---
m+2	Counter 2 input	NG	OK	NG	NG	---
m+3 to m+99	Not used	NG	OK	NG	OK	---
Present counter value		---	---	---	---	NG

10-3 Types of Data Written with IOWR Instruction

This section describes data transfer and types of data written with the IOWR instruction in each mode.

Simple Counter Mode

DM	Set item	Data transfer	IOWR instruction
m	Operating mode	Not available	Not available
Present counter value		Not available	Available

Linear and Circular Modes

DM	Set item	Data transfer	IOWR instruction
m	Operating mode	Not available	Not available
m+1	Counter 1 input	Not available	Not available
m+2	Counter 2 input	Not available	Not available
m+3	First word number of block of words storing data transferred	Not available	Available
m+4	Number of data blocks transferred	Not available	Available
m+5	Counter 1 ranges enabled	Not available	Available
m+6	Counter 2 ranges enabled	Not available	Available
m+7 to m+8	Counter 1 maximum count value	Not available	Available
m+9 to m+10	Counter 2 maximum count value	Not available	Available
m+11 to m+14	Not used	Not available	Not available but no error results
m+15 to m+19, to m+90 to m+94	Ranges 0 to 15	Available	Available
m+95 to m+99	Not used	Not available	Not available but no error results
Present counter value		Available	Available

Preset Mode

DM	Set item	Data transfer	IOWR instruction
m	Operating mode	Not available	Not available
m+1	Counter 1 input	Not available	Not available
m+2	Counter 2 input	Not available	Not available
m+3	First word number of block of words storing data transferred	Not available	Available
m+4	Number of data blocks transferred	Not available	Available
m+5 to m+9	Not used	Not available	Not available but no error results
m+10 to m+11	External output 0 OFF count value	Not available	Available
m+12 to m+13	External output 1 ON count value	Not available	Available
m+14 to m+15	External output 1 OFF count value	Not available	Available
m+16 to m+17	External output 2 ON count value	Not available	Available
m+18 to m+19	External output 2 OFF count value	Not available	Available
m+20	External output 3 ON hold time	Not available	Available
m+21 to m+29	Not used	Not available	Not available but no error results
m+30 to m+31	External output 4 OFF count value	Not available	Available
m+32 to m+33	External output 5 ON count value	Not available	Available
m+34 to m+35	External output 5 OFF count value	Not available	Available
m+36 to m+37	External output 6 ON count value	Not available	Available
m+38 to m+39	External output 6 OFF count value	Not available	Available
m+40	External output 7 ON hold time	Not available	Available
m+41 to m+49	Not used	Not available	Not available but no error results
m+50 to m+51, to m+80 to m+89	Counter preset values 0 to 19	Available	Available
m+91 to m+99	Not used	Not available	Not available but no error results
Present counter value		Not available	Not available

Gate, Cumulative Gate, and Sampling Modes

DM	Set item	Data transfer	IOWR instruction
m	Operating mode	Not available	Not available
m+1	Counter 1 input	Not available	Not available
m+2	Counter 2 input	Not available	Not available
m+3 to m+99	Not used	Not available	Not available but no error results
Present counter value		Not available	Not available

10-4 Program Examples with IORD Instruction

Note After writing programs, make sure that the programs work properly.

Example 1: Unit 0 in Linear Mode

In the following example, the data of ranges 0 and 1 is read from DM 0000.

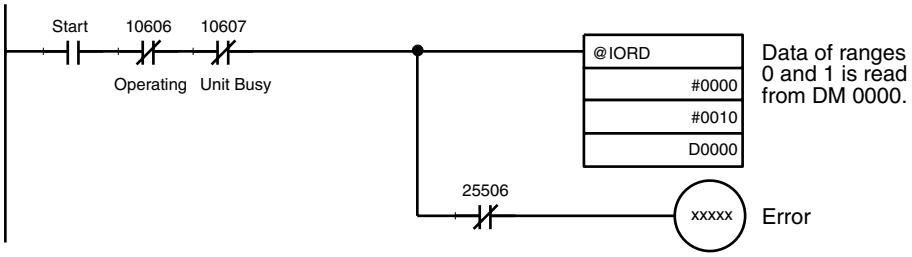

Example 2: Unit 0 in Linear Mode

In the following example, the first word number of a block of words storing the data transferred is read.

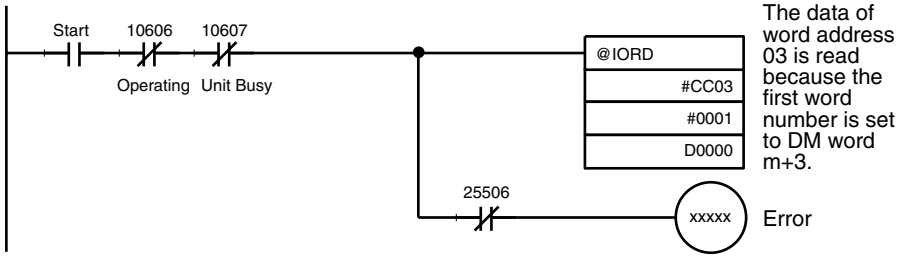

Example 3: Unit 0 in Linear Mode

In the following example, data changed with data transfer or the IOWR instruction is read from High-speed Counter Unit to the DM area of the PC.

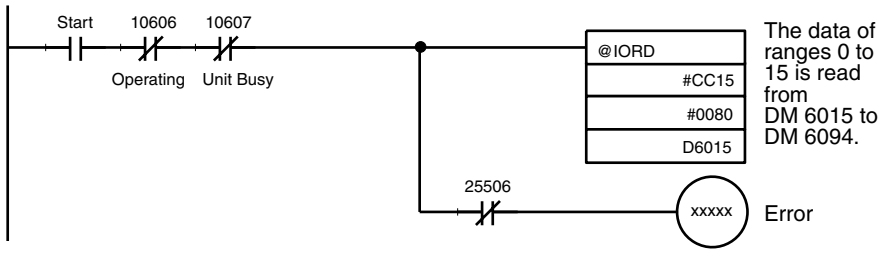

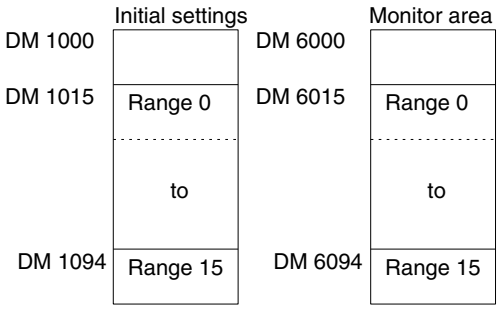

The data will be read when the IORD instruction has been executed.

Bit 25506 will be turned ON when the IORD instruction is executed with no errors and turned OFF if an error results.

10-5 Program Examples with IOWR Instruction

Note After writing programs, make sure that the programs work properly.

Example 1: Unit 0 in Linear Mode

In the following example, the present counter value of counter 1 is changed.

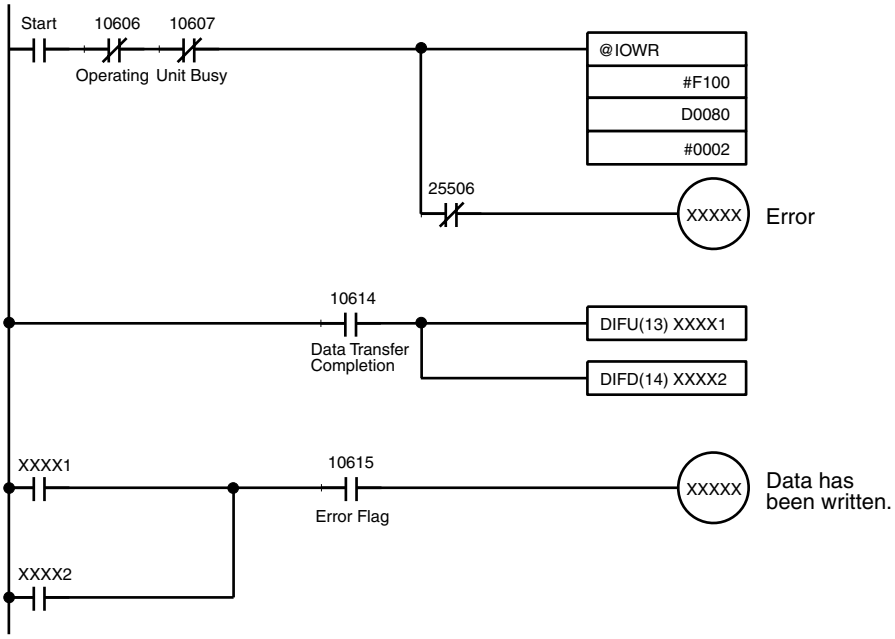

Example 2: Unit 0 in Linear Mode

In the following example, the data of range 0 is changed.

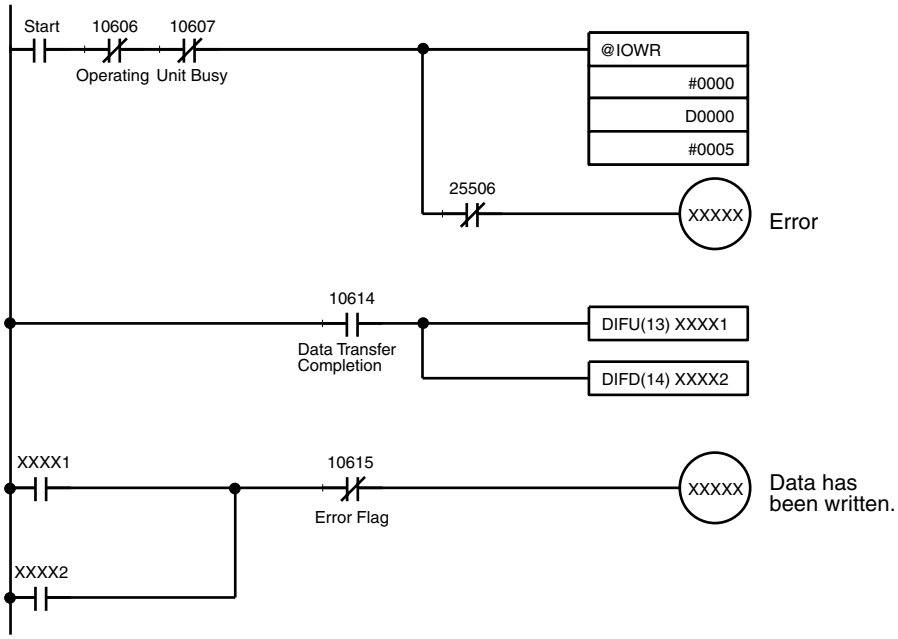

Bit 25506 will be turned ON when the IOWR instruction is executed with no errors and turned OFF if an error results.

Example 3: Unit 0 in Linear Mode

In the following example, all the data of ranges 0 to 15 is changed.

Case 1:Data Transfer Completion Flag is used for data transfer completion

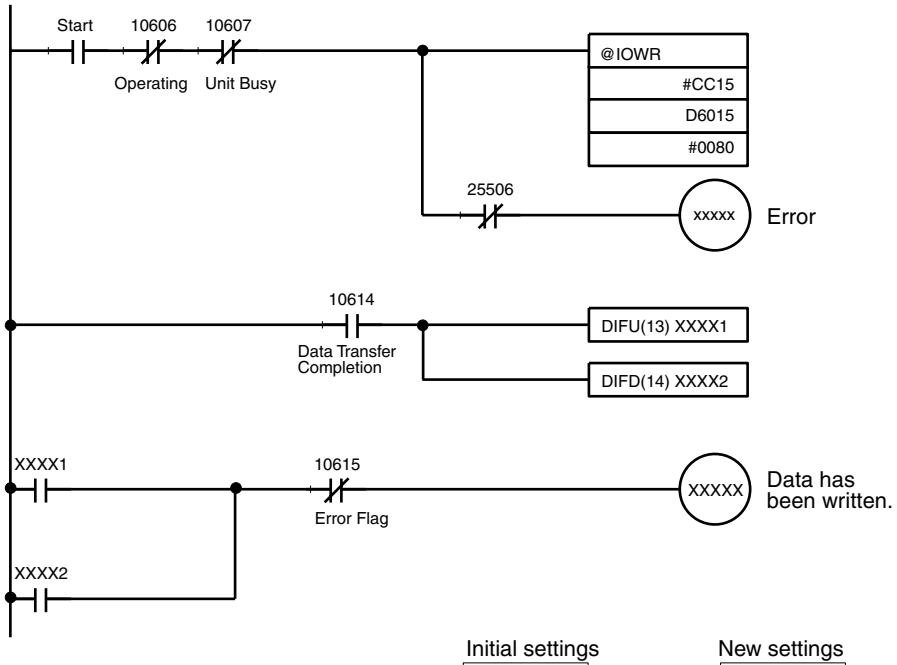

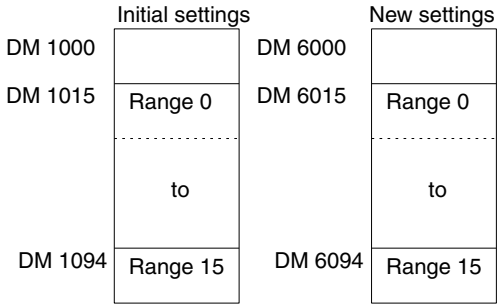

Case 2:Busy Flag is used for data transfer completion

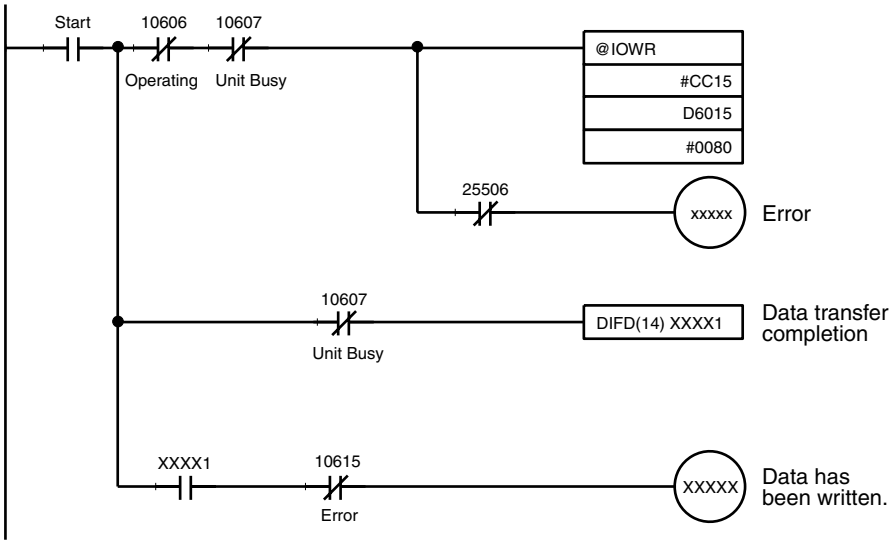

All the data has not been transferred when the IOWR instruction was completed. Use the Data Transfer Completion Flag or Unit Busy Flag to check the completion of data transfer.

10-6 Flags Used for IOWR Instruction and Data Transfer

This section shows the timing of each flag turned ON or OFF while the IOWR instruction or data transfer is executed.

The Busy Flag does not change immediately after the IOWR instruction or data transfer is executed.

IOWR Instruction Executed

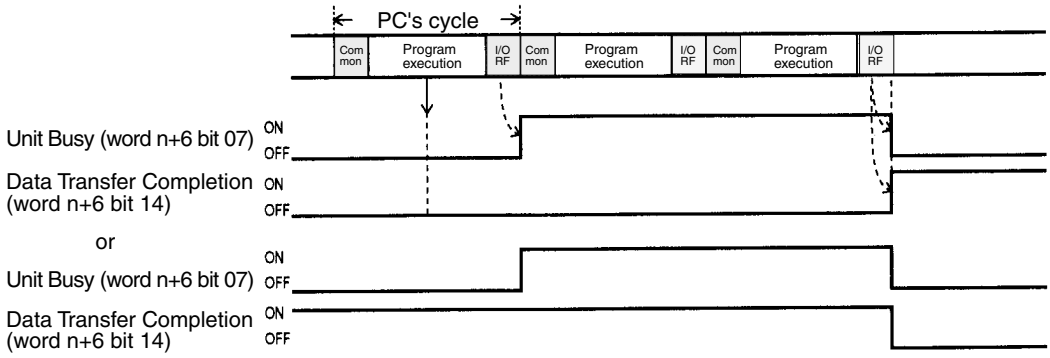

Data Transfer Executed

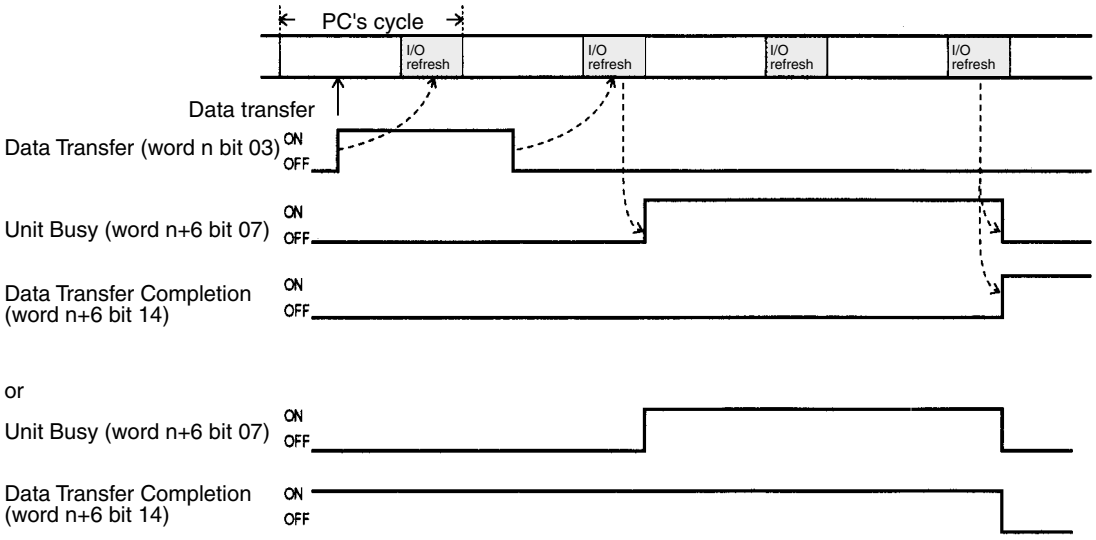

SECTION 11
Error Processing and Troubleshooting

This section provides information on error processing and troubleshooting procedures.

11-1 Error Processing 128
11-2 Errors Monitored with CPU 130
11-2-1 Special I/O Unit Errors 130
11-2-2 Functions of Special I/O Unit's AR and IR Bits 131

11-1 Error Processing

Error Indicators and Outputs

When an error has occurred, the ERR indicator on the front panel of the High-speed Counter Unit will be lit, the Error Flag (word n+6 bit 15) will be set to 1, and the error code will be output to n+7.

If more than one error has occurred, the next error code will be output to n+7 when word n bit 06 is turned ON.

Repeatedly turn word n bit 06 OFF and ON until all the error codes are output.

The High-speed Counter Unit stores a maximum of 30 error codes. An error code will be stored whenever an error occurs.

When a counter overflow has occurred, the ERR indicator will be lit and word n+6 bit 04 or 12 will be set to 1.

No Error Flag or error code will be output when a counter overflow has occurred. Reset the counter if a counter overflow has occurred.

When an error has occurred while the High-speed Counter Unit is operating, the error code will be output to n+7 automatically. When more than one error has occurred while the High-speed Counter Unit is in operation, only a single error code will be output to n+7 unless the High-speed Counter Unit is transferring data.

If errors have occurred, refer to the error location and error codes to remedy the error.

Word n+7 will be set to 0 when all error codes stored in the High-speed Counter Unit are read.

The error codes are output again in sequence beginning with the first error code if word n bit 06 is reset to 1.

Error Code:

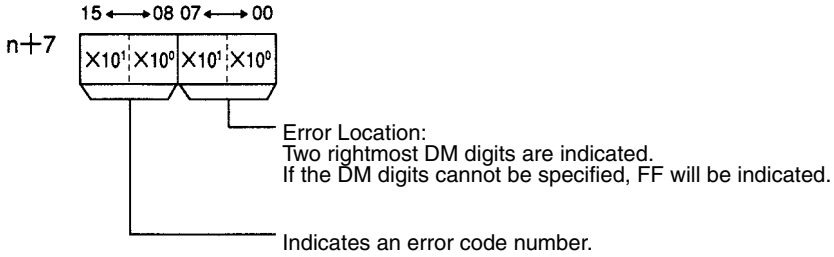

Error code	Type of error	Meaning
10	DM setting error	The upper and lower limit range or the sign used for the upper or lower limit is incorrect.
11		The value is an invalid BCD value or 0.
12		The sign used for the count value is incorrect, the count value is not within a range of –8,388,608 and 8,388,607 in linear mode, or the count value is not within a range of 0 to 65,535 in circular mode. For the preset mode, it means that the count value is less than 1 or more than 8,388,607.
13		The upper limit is smaller than the lower limit.
14		The operating mode set in the DM is different from the setting of the MODE switch on the front panel of the Unit.
15		The wrong operating mode is selected.
16		The output mode (NPN or PNP) setting in the DM is different from the setting of the switch on the rear panel of the Unit, the BCD/Hexadecimal mode setting is incorrect, or the external forced output setting is incorrect.
17		The input mode setting is wrong.
18		The reset mode is invalid.
19		The maximum count value in circular mode is invalid.
21	IOWR/IORD error	The number of data blocks transferred with the IOWR or IORD instruction is invalid.
22		The control code of the IOWR or IORD instruction is invalid or the specified address is in an inhibited area.
23		The data was not transferred with the IOWR instruction because the data was incorrect.
32	Data transfer error	The preset value number specified with the data transfer command is invalid or the preset value number at the start of counting is invalid.
33		The count value or range specified with the data transfer command is invalid.
34		The PC's first word specified with the data transfer command is invalid.
35		The PC's data area specified with the data transfer command is invalid.
36		The number of transfer data blocks specified with the data transfer command is invalid.

Errors and Remedies

1,2,3...

1. **DM Setting Error**
   If an error has occurred when the High-speed Counter Unit is turned ON or restarted, check the error code in word n+7 to correct the data in the DM. Turn ON or restart the High-speed Counter Unit after correcting the data.
2. **Counter Overflow**
   If a counter overflow has occurred, check with word n+6 bit 04 or 12 the counter that caused the overflow and reset the counter.
3. **Data Transfer Error**
   If an error has occurred during data transfer, the data in the High-speed Counter Unit has not been changed. Therefore transfer the error clear command "EC" by executing the data transfer or IOWR instruction, correct the data, and then execute data transfer again.

   If an error has occurred when the IOWR instruction is executed, the data in the High-speed Counter Unit has been changed. Therefore execute the

IOWR instruction with the correct data and transfer the error clear command “EC” by executing the data transfer or IOWR instruction.

If an error has occurred when the IORD instruction is executed, transfer the error clear command “EC” with the data transfer or IOWR instruction.

Error Clear with Data Transfer

To clear an error with data transfer, set the following data in the first word of the data transfer area in the DM and execute data transfer.

Example: Unit 0 with Transfer Data “00EC”

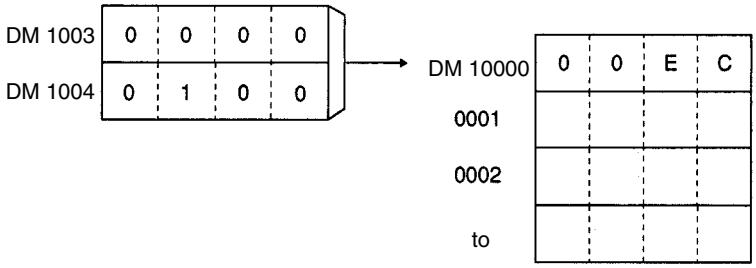

Error Clear with IOWR Instruction

To clear an error with the IOWR instruction, set the control code of the first operand of the IOWR instruction to “EC” and set the number of transfer data blocks to 1. Then execute the IOWR instruction.

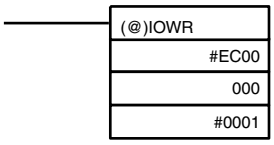

11-2 Errors Monitored with CPU

The following items can be monitored with the CPU of the PC.

11-2-1 Special I/O Unit Errors

Item	Cause	Remedy
Special I/O Unit malfunction	The PC does not start operating if a Special I/O Unit mounted to the PC has a fault in operation.	Replace the Special I/O Unit. Only “$” will be indicated if the I/O table is read from a Special I/O Unit that has a fault in operation.
I/O Unit Over	The PC does not start operating and AR 25415 is turned ON if the same unit number is allocated to more than one Special I/O Unit.	Set so that each Special I/O Unit mounted to the PC has a unique unit number. The unit number of a Special I/O Unit can be checked by reading the I/O table from the Special I/O Unit.
Special I/O Unit abnormality	A special I/O Unit mounted to the PC stops operating and AR 25415 is turned ON if the Special I/O Unit has not been refreshed correctly with the CPU.	Check the unit number of the Special I/O Unit with IR 28200 to IR 28215 if the PC is a C200HE, C200HG, or C200HX or AR 0000 to AR 0009, remedy the error, and with IR 28100 to IR 28115 if the PC is a C200HE, C200HG, or C200HX or AR 0100 to AR 0109, restart the Special I/O Unit by turning the Special I/O Unit OFF, ON, and OFF. If the error persists after the Special I/O Unit is restarted, replace the Special I/O Unit.

11-2-2 Functions of Special I/O Unit's AR and IR Bits

Error Indication

If the same unit number is allocated to more than one Special I/O Unit mounted to a PC or a Special I/O Unit is mounted to a PC has not been refreshed by the CPU, the corresponding bit of the CPU is turned ON. Refer to the following tables.

C200H or C200HS

Bit	Function
AR 0000	Turned ON if Unit 0 has an error.
AR 0001	Turned ON if Unit 1 has an error.
AR 0002	Turned ON if Unit 2 has an error.
AR 0003	Turned ON if Unit 3 has an error.
AR 0004	Turned ON if Unit 4 has an error.
AR 0005	Turned ON if Unit 5 has an error.
AR 0006	Turned ON if Unit 6 has an error.
AR 0007	Turned ON if Unit 7 has an error.
AR 0008	Turned ON if Unit 8 has an error.
AR 0009	Turned ON if Unit 9 has an error.

C200HX, C200HG, or C200HE

Bit	Function
28200	Turned ON if Unit 0 has an error.
28201	Turned ON if Unit 1 has an error.
28202	Turned ON if Unit 2 has an error.
28203	Turned ON if Unit 3 has an error.
28204	Turned ON if Unit 4 has an error.
28205	Turned ON if Unit 5 has an error.
28206	Turned ON if Unit 6 has an error.
28207	Turned ON if Unit 7 has an error.
28208	Turned ON if Unit 8 has an error.
28209	Turned ON if Unit 9 has an error.
28210	Turned ON if Unit A has an error.
28211	Turned ON if Unit B has an error.
28212	Turned ON if Unit C has an error.
28213	Turned ON if Unit D has an error.
28214	Turned ON if Unit E has an error.
28215	Turned ON if Unit F has an error.

Restart Flag

The following bits are used to restart Special I/O Units by turning the Special I/O Units OFF, ON, and OFF.

C200H or C200HS

Bit	Function
AR 0100	Restarts Unit 0.
AR 0101	Restarts Unit 1.
AR 0102	Restarts Unit 2.
AR 0103	Restarts Unit 3.
AR 0104	Restarts Unit 4.
AR 0105	Restarts Unit 5.
AR 0106	Restarts Unit 6.
AR 0107	Restarts Unit 7.
AR 0108	Restarts Unit 8.
AR 0109	Restarts Unit 9.

C200HX or C200HG or C200HE

Bit	Function
28100	Restarts Unit 0.
28101	Restarts Unit 1.
28102	Restarts Unit 2.
28103	Restarts Unit 3.
28104	Restarts Unit 4.
28105	Restarts Unit 5.
28106	Restarts Unit 6.
28107	Restarts Unit 7.
28108	Restarts Unit 8.
28109	Restarts Unit 9.
28110	Restarts Unit A.
28111	Restarts Unit B.
28112	Restarts Unit C.
28113	Restarts Unit D.
28114	Restarts Unit E.
28115	Restarts Unit F.

Appendix A

Comparison with C200H-CT001-V1

The C200H-CT021 High-speed Counter Unit has two-axis pulse input functions. These functions are not identical with the pulse input functions of the C200H-CT001-V1 High-speed Counter Unit. Refer to the following table.

Function	C200H-CT021	C200H-CT001-V1
Pulse input performance	Voltage input: 50,000 cps Line driver input: 75,000 cps	50,000 cps
Pulse input specification	With line driver input and without 5-V input	With 5-V input and without line driver input
Input setting	DM area	DIP switch
Reset mode	Number of modes set with DM: 11	Number of modes set with DIP switch: 17
Output specification	NPN or PNP (selectable) 8 points/common 8 points/two axes	NPN output only 4 points/common 8 axes/axis
Operating mode	Newly added: Simple counter mode Canceled: Latch mode	Unavailable: Simple counter mode Available: Latch mode
Data transfer function	Impossible to change the transfer area or number of transfer data blocks after the Unit is turned ON. Transfer area: DM 0000 to DM 1999 for the C200H and DM 0000 to DM 6655 for the C200HS, C200HX, C200HG, and C200HE	Impossible to change the transfer area or number of transfer data blocks after the Unit is turned ON. Transfer area: DM 0000 to DM 1999 for the C200H, C200HS, C200HX, C200HG, and C200HE
IORD/IOWR instructions	Available	Unavailable
External forced output	Set with IR bits. Not controlled with ladder programs. Available only when external outputs are not inhibited. Enabled with a DM command.	Set with IR bits. Enabled with IR command. (Enable forced output)
Sign indication	+: 0, –: F	+: 0, –: 1
Number of comparative upper and lower limits	16 sets for two counters	16 sets/counter
Number of preset values	20 sets for two counters	20 sets/counter
Count input signal	Up and down pulses input Input A: Down Input B: Up Pulse and direction input Input A: Direction Input B: Pulse	Up and down pulses input Input A: Up Input B: Down Pulse and direction input Input A: Pulse Input B: Direction
Set value range/Present counter value	BCD/Hexadecimal data	BCD data only
Error clear	The error clear command can be issued with the data transfer or IOWR instruction.	With the error read operation.
Error Flag	Kept on hold while the Unit has the error. Cleared with the error clear command.	Cleared when the error is read.
Error code	Read repeatedly.	Read only once.
Unit number	0 to F	0 to 9

Appendix B

Data Area Allocation

Switch Settings

Switch	Setting	
MACHINE No.	0 to F	
MODE	0	Simple counter mode
	1	Linear mode
	2	Circular mode
	3	Preset mode
	4	Gate mode
	5	Cumulative gate mode
	6	Sampling mode

Simple Counter Mode

DM Allocation (m = 1000 + 100 x Unit No.)

DM	15 ← → 00			
m	Present counter value 0: BCD; 1: Hexadecimal	0	0	Operating mode 0: Simple
m+1 to m+99	Not used.			

IR Bit Allocation
(n = 100 + 10 x Unit No.) or
(n = 400 + 10 x (Unit No. – 10) if Unit No. is A to F)

Bit	Word (Output)	
	n	n+1
00	Stop both Counters	Not used.
01	Not used.	
02		
03		
04	RESET Counter 1	
05	RESET Counter 2	
06	READ ERROR	
07	Not used.	
08		
09		
10		
11		
12		
13		
14		
15		

Bit	Word (Input)							
	n+2	n+3	n+4	n+5	n+6	n+7	n+8	n+9
00	Counter 1 present value $x10^0$ [$x16^0$]	Counter 1 present value $x10^4$ [$x16^4$]	Counter 2 present value $x10^0$ [$x16^0$]	Counter 2 present value $x10^4$ [$x16^4$]	Counter 1 counting	Error location $x10^0$	Not used.	Not used.
01					Counter 1 Input Z			
02					Counter 1 Control input IN1			
03					Counter 1 Control input IN2			
04	Counter 1 present value $x10^1$ [$x16^1$]	Counter 1 present value $x10^5$ [$x16^5$]	Counter 2 present value $x10^1$ [$x16^1$]	Counter 2 present value $x10^5$ [$x16^5$]	Counter 1 Counter overflow	Error location $x10^1$		
05					Counter 1 Reset			
06					Counter operating			
07					Unit busy			
08	Counter 1 present value $x10^2$ [$x16^2$]	Counter 1 present value $x10^6$ [0]	Counter 2 present value $x10^2$ [$x16^2$]	Counter 2 present value $x10^6$ [0]	Counter 2 counting	Error code $x10^0$		
09					Counter 2 Input Z			
10					Counter 2 Control input IN1			
11					Counter 2 Control input IN2			
12	Counter 1 present value $x10^3$ [$x16^3$]	Sign 0: + [0] F: –	Counter 2 present value $x10^3$ [$x16^3$]	Sign 0: + [0] F: –	Counter 2 Counter overflow	Error code $x10^1$		
13					Counter 2 Reset			
14					Data transfer completion			
15					Error			

Note Values in brackets are in hexadecimal.

Linear and Circular Modes

DM Allocation (m = 1000 + 100 x Unit No.)

DM	15 ← → 00			
m	Counter values and ranges mode 0: BCD; 1: Hexadecimal	External output 0: NPN; 1: PNP	Forced external output 0: Disabled; 1: Enabled	Operating mode 1: Linear; 2: Circular
m+1	Counter 1 reset mode (00 to 11)		Not used	Counter 1 input type
	$x10^1$	$x10^0$		
m+2	Counter 2 reset mode (00 to 11)		Not used	Counter 2 input type
	$x10^1$	$x10^0$		
m+3	First word number of PC's words storing transfer data			
	$x10^3$	$x10^2$	$x10^1$	$x10^0$
m+4	Number of transfer data blocks (01 to 03)		0	PC data area 0: DM, 1: I/O, 2: LR, 3: HR, 4: AR, 5: EM
	$x10^1$	$x10^0$		
m+5	Counter 1 range enabled; Each bit (00 to 15) 1: Enabled, 0: Disabled			
m+6	Counter 2 range enabled; Each bit (00 to 15) 1: Enabled, 0: Disabled			
m+7	Maximum count value of counter 1 in circular mode only			
	$x10^3$ [$x16^3$]	$x10^2$ [$x16^2$]	$x10^1$ [$x16^1$]	$x10^0$ [$x16^0$]
m+8	Range: 1 to 65,535 (0001 to FFFF)			
	0 [0]	0 [0]	0 [0]	$x10^4$ [0]
m+9	Maximum count value of counter 2 in circular mode only			
	$x10^3$ [$x16^3$]	$x10^2$ [$x16^2$]	$x10^1$ [$x16^1$]	$x10^0$ [$x16^0$]
m+10	Range: 1 to 65,535 (0001 to FFFF)			
	0 [0]	0 [0]	0 [0]	$x10^4$ [0]
m+11 to m+14	Not used.			
m+15 to m+94 Range: 0 to 15 –8,388,608 to 8,388,607 [800000 to FFFFFF, and 000000 to 7FFFFF]	Lower limit			
	$x10^3$ [$x16^3$]	$x10^2$ [$x16^2$]	$x10^1$ [$x16^1$]	$x10^0$ [$x16^0$]
	Sign 0: + [0] F: –	$x10^6$ [0]	$x10^5$ [$x16^5$]	$x10^4$ [$x16^4$]
	Upper limit			
	$x10^3$ [$x16^3$]	$x10^2$ [$x16^2$]	$x10^1$ [$x16^1$]	$x10^0$ [$x16^0$]
	Sign 0: + [0] F: –	$x10^6$ [0]	$x10^5$ [$x16^5$]	$x10^4$ [$x16^4$]
	Output pattern; Each bit 1: ON, 0: OFF			
m+95 to m+99	Not used.			

Note Values in brackets are in hexadecimal.

IR Bit Allocation (n = 100 + 10 x Unit No.) or (n = 400 + 10 x (Unit No. – 10) if Unit No. is A to F)

<table>
<tr><th rowspan="2">Bit</th><th colspan="3">Word (Output)</th></tr>
<tr><th colspan="2">n</th><th>n+1</th></tr>
<tr><td>00</td><td colspan="2">Start/Stop</td><td rowspan="9">Valid value range number
Each bit
1: Enabled
0: Disabled</td></tr>
<tr><td>01</td><td colspan="2">Change ranges for counter 1</td></tr>
<tr><td>02</td><td colspan="2">Change ranges for counter 2</td></tr>
<tr><td>03</td><td colspan="2">Data transfer</td></tr>
<tr><td>04</td><td colspan="2">RESET Counter 1</td></tr>
<tr><td>05</td><td colspan="2">RESET Counter 2</td></tr>
<tr><td>06</td><td colspan="2">Read error</td></tr>
<tr><td>07</td><td colspan="2">ENABLE External Output</td></tr>
<tr><td>08</td><td>0</td><td rowspan="8">Forced external output
1: ON, 0: OFF</td></tr>
<tr><td>09</td><td>1</td></tr>
<tr><td>10</td><td>2</td></tr>
<tr><td>11</td><td>3</td></tr>
<tr><td>12</td><td>4</td></tr>
<tr><td>13</td><td>5</td></tr>
<tr><td>14</td><td>6</td></tr>
<tr><td>15</td><td>7</td></tr>
</table>

Bit	Word (Input)							
	n+2	n+3	n+4	n+5	n+6	n+7	n+8	n+9
00	Counter 1 present value $x10^0$ [$x16^0$]	Counter 1 present value $x10^4$ [$x16^4$]	Counter 2 present value $x10^0$ [$x16^0$]	Counter 2 present value $x10^4$ [$x16^4$]	Counter 1 counting	Error location $x10^0$	Operating range number Each bit 1: Operating	Output status Each bit 1:ON, 0: OFF
01					Counter 1 Input Z			
02					Counter 1 Control input IN1			
03					Counter 1 Control input IN2			
04	Counter 1 present value $x10^1$ [$x16^1$]	Counter 1 present value $x10^5$ [$x16^5$]	Counter 2 present value $x10^1$ [$x16^1$]	Counter 2 present value $x10^5$ [$x16^5$]	Counter 1 Counter overflow	Error location $x10^1$		
05					Counter 1 Reset			
06					Counter operating			
07					Unit busy			
08	Counter 1 present value $x10^2$ [$x16^2$]	Counter 1 present value $x10^6$ [0]	Counter 2 present value $x10^2$ [$x16^2$]	Counter 2 present value $x10^6$ [0]	Counter 2 counting	Error code $x10^0$		
09					Counter 2 Input Z			
10					Counter 2 Control input IN1			
11					Counter 2 Control input IN2			
12	Counter 1 present value $x10^3$ [$x16^3$]	Sign 0: + [0] F: –	Counter 2 present value $x10^3$ [$x16^3$]	Sign 0: + [0] F: –	Counter 2 Counter overflow	Error code $x10^1$		
13					Counter 2 Reset			
14					Data transfer completion			
15					Error			

Note Values in brackets are in hexadecimal.

Preset Mode

DM Allocation (m = 1000 + 100 x Unit No.)

DM	15 ← → 00			
m	Present/Set value modes 0: BCD; 1: Hexadecimal	External output 0: NPN; 1: PNP	Forced external output 0: Disabled; 1: Enabled	Operating mode 3: Preset mode
m+1	Counter 1 reset mode (00 to 11)		Control mode 0: Internal; 1: External	Counter 1 input type
	$x10^1$	$x10^0$		
m+2	Counter 2 reset mode (00 to 11)		Control mode 0: Internal; 1: External	Counter 2 input type
	$x10^1$	$x10^0$		

DM	15 ← → 00			
m+3	First word number of PC's words storing transfer data			
	$x10^3$	$x10^2$	$x10^1$	$x10^0$
m+4	Number of transfer data blocks (01 to 06)		0	PC data area 0: DM, 1: I/O, 2: LR, 3: HR, 4: AR, 5: EM
	$x10^1$	$x10^0$		
m+5 to m+9	Not used.			
m+10	External output 0 OFF count value			
	$x10^3$ [$x16^3$]	$x10^2$ [$x16^2$]	$x10^1$ [$x16^1$]	$x10^0$ [$x16^0$]
m+11	External output 0 OFF count value			
	0 [0]	$x10^6$ [0]	$x10^5$ [$x16^5$]	$x10^4$ [$x16^4$]
m+12	External output 1 ON count value			
	$x10^3$ [$x16^3$]	$x10^2$ [$x16^2$]	$x10^1$ [$x16^1$]	$x10^0$ [$x16^0$]
m+13	External output 1 ON count value			
	0 [0]	$x10^6$ [0]	$x10^5$ [$x16^5$]	$x10^4$ [$x16^4$]
m+14	External output 1 OFF count value			
	$x10^3$ [$x16^3$]	$x10^2$ [$x16^2$]	$x10^1$ [$x16^1$]	$x10^0$ [$x16^0$]
m+15	External output 1 OFF count value			
	0 [0]	$x10^6$ [0]	$x10^5$ [$x16^5$]	$x10^4$ [$x16^4$]
m+16	External output 2 ON count value			
	$x10^3$ [$x16^3$]	$x10^2$ [$x16^2$]	$x10^1$ [$x16^1$]	$x10^0$ [$x16^0$]
m+17	External output 2 ON count value			
	0 [0]	$x10^6$ [0]	$x10^5$ [$x16^5$]	$x10^4$ [$x16^4$]
m+18	External output 2 OFF count value			
	$x10^3$ [$x16^3$]	$x10^2$ [$x16^2$]	$x10^1$ [$x16^1$]	$x10^0$ [$x16^0$]
m+19	External output 2 OFF count value			
	0 [0]	$x10^6$ [0]	$x10^5$ [$x16^5$]	$x10^4$ [$x16^4$]
m+20	External output 3 ON hold time (Unit: 1 s)		FFFF: ON hold	
	$x10^1$	$x10^0$	$x10^{-1}$	$x10^{-2}$
m+21 to m+29	Not used.			
m+30	External output 4 OFF count value			
	$x10^3$ [$x16^3$]	$x10^2$ [$x16^2$]	$x10^1$ [$x16^1$]	$x10^0$ [$x16^0$]
m+31	External output 4 OFF count value			
	0 [0]	$x10^6$ [0]	$x10^5$ [$x16^5$]	$x10^4$ [$x16^4$]
m+32	External output 5 ON count value			
	$x10^3$ [$x16^3$]	$x10^2$ [$x16^2$]	$x10^1$ [$x16^1$]	$x10^0$ [$x16^0$]
m+33	External output 5 ON count value			
	0 [0]	$X10^6$ [0]	$x10^5$ [$x16^5$]	$x10^4$ [$x16^4$]
m+34	External output 5 OFF count value			
	$x10^3$ [$x16^3$]	$x10^2$ [$x16^2$]	$x10^1$ [$x16^1$]	$x10^0$ [$x16^0$]
m+35	External output 5 OFF count value			
	0 [0]	$x10^6$ [0]	$x10^5$ [$x16^5$]	$x10^4$ [$x16^4$]
m+36	External output 6 ON count value			
	$x10^3$ [$x16^3$]	$x10^2$ [$x16^2$]	$x10^1$ [$x16^1$]	$x10^0$ [$x16^0$]
m+37	External output 6 ON count value			
	0 [0]	$x10^6$ [0]	$x10^5$ [$x16^5$]	$x10^4$ [$x16^4$]

DM	15 ← → 00			
m+38	External output 6 OFF count value			
	$x10^3$ [$x16^3$]	$x10^2$ [$x16^2$]	$x10^1$ [$x16^1$]	$x10^0$ [$x16^0$]
m+39	External output 6 OFF count value			
	0 [0]	$x10^6$ [0]	$x10^5$ [$x16^5$]	$x10^4$ [$x16^4$]
m+40	External output 7 ON hold time (Unit: 1 s)		FFFF: ON hold	
	$x10^1$	$x10^0$	$x10^{-1}$	$x10^{-2}$
m+41 to m+49	Not used.			
m+50 to m+89 Counter preset value 0 to 19	Counter preset value (0 to 8,388,607)			
	$x10^3$ [$x16^3$]	$x10^2$ [$x16^2$]	$x10^1$ [$x16^1$]	$x10^0$ [$x16^0$]
	0 [0]	$x10^6$ [0]	$x10^5$ [$x16^5$]	$x10^4$ [$x16^4$]
m+90 to m+99	Not used.			

Note Values in brackets are in hexadecimal.

Preset Value Range

Preset value	Range	
External output ON/OFF value (Words m+10 to m+20) (Words m+30 to m+40)	External output 0 (4) 0 to 8,388,606 [000000 to 7FFFFE]	External output 1, 2 (5, 6) 0 to 8,388,607 [000000 to 7FFFFF]
Counter preset value (Words m+50 to m+89)	1 to 8,388,607 [000001 to 7FFFFF] Counter 2 does not start if this value is set to 0.	

Values in parentheses are for counter 2 and values in brackets are in hexadecimal.

IR Bit Allocation (n = 100 + 10 x Unit No.) or (n = 400 + 10 x (Unit No. - 10) if Unit No. is A to F)

Bit	Word (Output)		
	n		n+1
00	START Counter 1		Counter 1 preset value number $x10^0$
01	START Counter 2		
02	Not used.		
03	Data transfer		
04	RESET Counter 1		Counter 1 preset value number $x10^1$
05	RESET Counter 2		
06	Read error		
07	ENABLE External Output		
08	0	Forced external output 1: ON, 0: OFF	Counter 2 preset value number $x10^0$
09	1		
10	2		
11	3		
12	4		Counter 2 preset value number $x10^1$
13	5		
14	6		
15	7		

Bit	Word (Input)							
	n+2	n+3	n+4	n+5	n+6	n+7	n+8	n+9
00	Counter 1 present value $x10^0$ [$x16^0$]	Counter 1 present value $x10^4$ [$x16^4$]	Counter 2 present value $x10^0$ [$x16^0$]	Counter 2 present value $x10^4$ [$x16^4$]	Counter 1 counting	Error location $x10^0$	Counter 1 preset value number $x10^0$	Output status of each bit 1:ON, 0: OFF
01					Counter 1 Input Z			
02					Counter 1 Control input IN1			
03					Counter 1 Control input IN2			
04	Counter 1 present value $x10^1$ [$x16^1$]	Counter 1 present value $x10^5$ [$x16^5$]	Counter 2 present value $x10^1$ [$x16^1$]	Counter 2 present value $x10^5$ [$x16^5$]	Counter 1 Counter overflow	Error location $x10^1$	Counter 1 preset value number $x10^1$	
05					Counter 1 Reset			
06					Counter operating			
07					Unit busy			
08	Counter 1 present value $x10^2$ [$x16^2$]	Counter 1 present value $x10^6$ [0]	Counter 2 present value $x10^2$ [$x16^2$]	Counter 2 present value $x10^6$ [0]	Counter 2 counting	Error code $x10^0$	Counter 2 preset value number $x10^0$	---
09					Counter 2 Input Z			
10					Counter 2 Control input IN1			
11					Counter 2 Control input IN2			
12	Counter 1 present value $x10^3$ [$x16^3$]	Counter 1 present value 0	Counter 2 present value $x10^3$ [$x16^3$]	Counter 2 present value 0	Counter 2 Counter overflow	Error code $x10^1$	Counter 2 preset value number $x10^1$	---
13					Counter 2 Reset			
14					Data transfer completion			
15					Error			

Note Values in brackets are in hexadecimal.

Gate, Cumulative Gate, and Sampling Modes

DM Allocation

DM	15 ← → 00			
m	Present/Set value modes 0: BCD; 1: Hexadecimal	Not used.	Not used.	Operating mode 4: Gate mode 5: Cumulative gate mode 6: Sampling mode
m+1	Not used.		Counter 1 control input 0: External; 1: Internal	Counter 1 input type
m+2	Not used.		Counter 2 control input 0: External; 1: Internal	Counter 2 input type
m+3 to m+99	Not used.			

IR Bit Allocation (n = 100 + 10 x Unit No.) or (n = 400 + 10 x (Unit No. – 10) if Unit No. is A to F)

Bit	Word (Output)	
	n	n+1
00	Not used.	Sampling time Unit: ms (0001 to 9999) $x10^0$
01	Set time for counter 1	
02	Set time for counter 2	
03	Not used.	
04		Sampling time $x10^1$
05		
06	Read error	
07	Not used.	
08	Counter 1 internal control IN1	Sampling time $x10^2$
09	Counter 1 internal control IN2	
10	Counter 2 internal control IN1	
11	Counter 2 internal control IN2	
12	Not used.	Sampling time $x10^3$
13		
14		
15		

Bit	Word (Input)							
	n+2	n+3	n+4	n+5	n+6	n+7	n+8	n+9
00	Counter 1 present value $x10^0$ [$x16^0$]	Counter 1 present value $x10^4$ [$x16^4$]	Counter 2 present value $x10^0$ [$x16^0$]	Counter 2 present value $x10^4$ [$x16^4$]	Counter 1 counting	Error location $x10^0$	Counter 1 sampling time $x10^0$	Counter 2 sampling time $x10^0$
01					Counter 1 Input Z			
02					Counter 1 External control input IN1			
03					Counter 1 External control input IN2			
04	Counter 1 present value $x10^1$ [$x16^1$]	Counter 1 present value $x10^5$ [$x16^5$]	Counter 2 present value $x10^1$ [$x16^1$]	Counter 2 present value $x10^5$ [$x16^5$]	Counter 1 Counter overflow	Error location $x10^1$	Counter 1 sampling time $x10^1$	Counter 2 sampling time $x10^1$
05					Not used.			
06					Counter operating			
07					Unit busy			
08	Counter 1 present value $x10^2$ [$x16^2$]	Counter 1 present value $x10^6$ [0]	Counter 2 present value $x10^2$ [$x16^2$]	Counter 2 present value $x10^6$ (0)	Counter 2 counting	Error code $x10^0$	Counter 1 sampling time $x10^2$	Counter 2 sampling time $x10^2$
09					Counter 2 Input Z			
10					Counter 2 External control input IN1			
11					Counter 2 External control input IN2			
12	Counter 1 present value $x10^3$ [$x16^3$]	Sign 0: + [0] F: –	Counter 2 present value $x10^3$ [$x16^3$]	Sign 0: + [0] F: –	Counter 2 Counter overflow	Error code $x10^1$	Counter 1 sampling time $x10^3$	Counter 2 sampling time $x10^3$
13					Not used.			
14					Data transfer completion			
15					Error			

Note Values in brackets are in hexadecimal.

Appendix C

DM Coding Sheet Unit Number □: DM □□00 to DM □□99

Linear and Circular Modes

DM	15↔00				Function	
00					Operating mode, forced external output, external output, and counter value mode	
01			0		Counter 1 input type and reset mode	
02			0		Counter 2 input type and reset mode	
03					First word number of PC's words storing transfer data	
04			0		Number of transfer data blocks and data area	
05					Counter 1 range enabled	
06					Counter 2 range enabled	
07					Maximum count value of counter 1 in circular mode only	
08	0	0	0			
09					Maximum count value of counter 2 in circular mode only	
10	0	0	0			
11					Not used.	
12						
13						
14						
15					Lower limit	Range 0
16						
17					Upper limit	
18						
19					Output pattern	
20					Lower limit	Range 1
21						
22					Upper limit	
23						
24					Output pattern	
25					Lower limit	Range 2
26						
27					Upper limit	
28						
29					Output pattern	

DM	15↔00				Function	
30					Lower limit	Range 3
31						
32					Upper limit	
33						
34					Output pattern	
35					Lower limit	Range 4
36						
37					Upper limit	
38						
39					Output pattern	
40					Lower limit	Range 5
41						
42					Upper limit	
43						
44					Output pattern	
45					Lower limit	Range 6
46						
47					Upper limit	
48						
49					Output pattern	
50					Lower limit	Range 7
51						
52					Upper limit	
53						
54					Output pattern	
55					Lower limit	Range 8
56						
57					Upper limit	
58						
59					Output pattern	
60					Lower limit	Range 9
61						
62					Upper limit	
63						
64					Output pattern	

DM	15↔00				Function	
65					Lower limit	Range 10
66						
67					Upper limit	
68						
69					Output pattern	
70					Lower limit	Range 11
71						
72					Upper limit	
73						
74					Output pattern	
75					Lower limit	Range 12
76						
77					Upper limit	
78						
79					Output pattern	
80					Lower limit	Range 13
81						
82					Upper limit	
83						
84					Output pattern	
85					Lower limit	Range 14
86						
87					Upper limit	
88						
89					Output pattern	
90					Lower limit	Range 15
91						
92					Upper limit	
93						
94					Output pattern	
95					Not used.	
96						
97						
98						
99						

Preset Mode

DM	15↔00				Function
00				3	Operating mode, forced external output, external output, and counter value mode
01					Counter 1 input type, control mode, and reset mode
02					Counter 2 input type, control mode, and reset mode
03					First word number of PC's words storing transfer data
04			0		Number of transfer data blocks and data area
05					Not used.
06					
07					
08					
09					
10					External output 0 OFF count value
11	0				
12					External output 1 ON count value
13	0				
14					External output 1 OFF count value
15	0				
16					External output 2 ON count value
17	0				
18					External output 2 OFF count value
19	0				
20					External output 3 ON hold time
21					Not used.
22					
23					
24					
25					
26					
27					
28					
29					

DM	15↔00				Function
30					External output 4 OFF count value
31	0				
32					External output 5 ON count value
33	0				
34					External output 5 OFF count value
35	0				
36					External output 6 ON count value
37	0				
38					External output 6 OFF count value
39	0				
40					External output 7 ON hold time
41					Not used.
42					
43					
44					
45					
46					
47					
48					
49					
50					Counter preset value 0
51	0				
52					Counter preset value 1
53	0				
54					Counter preset value 2
55	0				
56					Counter preset value 3
57	0				
58					Counter preset value 4
59	0				
60					Counter preset value 5
61	0				
62					Counter preset value 6
63	0				
64					Counter preset value 7
65	0				
66					Counter preset value 8
67	0				

DM	15↔00				Function
68					Counter preset value 9
69	0				
70					Counter preset value 10
71	0				
72					Counter preset value 11
73	0				
74					Counter preset value 12
75	0				
76					Counter preset value 13
77	0				
78					Counter preset value 14
79	0				
80					Counter preset value 15
81	0				
82					Counter preset value 16
83	0				
84					Counter preset value 17
85	0				
86					Counter preset value 18
87	0				
88					Counter preset value 19
89	0				
90					Not used.
91					
92					
93					
94					
95					
96					
97					
98					
99					

Appendix D
Using with CS1-series PCs

Differences in Memory Allocation

Note the following differences in memory allocation when using the C200H-CT021 with a CS1-series PC.

CIO Area and DM Area Allocation

- The beginning word, n, of the words in the IR Area (CIO Area) allocated to the C200-CT021 changes from
  n = IR 100 (400 for unit numbers A or higher) + (unit number × 10) to
  n = CIO 2000 + (unit number × 10)
- The beginning word, m, of the words in the DM Area allocated to the C200-CT021 changes from
  m = DM1000 + (unit number × 100) to
  m = D20000 + (unit number × 100)

Specifying the Transfer Area for High-speed Counter Set Values

The transfer area for High-speed Counter set values can be specified in the DM Area (m+3, m+4) in the following way.

Specification Method

(Example: Linear/Circular Modes or Preset Mode)

m = D20000 + (unit number × 10)

Area	Address in CS1 (See note.)	Specification method with DM Area allocation	
		PC data area m+4, bits 00 to 03 (BCD, 1 digit)	First word m+3, bits 00 to 15 (BCD, 4 digits)
General-purpose area in DM Area	D00000 to D06655	0	0000 to 6655
CIO Area	CIO 0000 to CIO 0511 **Note** CIO 0281 cannot be specified.	1	0000 to 0511 **Note** 0281 cannot be specified.
Data Link Area	CIO 1000 to CIO 1063	2	0000 to 0063
Holding Area 1	H000 to H099	3	0000 to 0099
Holding Area 2	H100 to H127 **Note** H101 cannot be specified.	4	0000 to 0027 **Note** 0001 cannot be specified.
EM Area	E0_00000 to E0_06143	5	00000 to 06143

Note Only the CS1 memory addresses in the above table can be specified.

Data Configuration

CIO Area Allocation

(Example: Linear/Circular Modes)

n = 2000 + (unit number × 10)

Bit	15 … 0	Contents	Direction
n	Instructions from CPU Unit	Start, Data Transfer, counter reset, external output, etc.	CPU Unit to High-speed Counter
n + 1 to n + 9	High-speed Counter status	Counter present value, error code, control input, etc.	High-speed Counter to CPU Unit

DM Area Allocation

(Example: Linear/Circular Modes)

m = D20000 + (unit number × 100)

Bit	15 … 0	Contents	Direction
m to m + 99	High-speed Counter system settings	Operating mode, upper and lower limits, output patterns, etc.	CPU Unit to High-speed Counter

Setup Procedure

Initial Hardware Settings

- Set the unit number and the operating mode using the rotary switch on the front of the High-speed Counter Unit. Set the output mode using the switch on the back of the Unit.
- Mount on a CS1 CPU Rack, a C200H Expansion I/O Rack, a CS1 Expansion Rack, or a SYSMAC BUS Remote Slave Rack. In a basic system, up to 16 Units can be mounted. (There are no restrictions on the mounting order.)
- Perform wiring using the I/O connectors.
- Connect a Programming Device.
- Turn ON the power supply to the PC.
- Create an I/O table.

Initial Software Settings

- Set the parameters in allocated words of the DM Area (m to m+99).
- Reset the power supply, or restart the Unit.

Operating Commands

- Start counter operation by turning ON the Start command (word n, bit 00), using OUT or another instruction.

Programming

Changing Set Values and Starting Counter Operation

Example: Linear/Circular Modes

- With ON for SW1 or OFF for SW2 as the input condition, the Data Transfer Command Bit (word n, bit 03) in the words allocated from the CIO Area is turned ON using OUT or another instruction.
- With the Data Transfer Completion Flag (word n, bit 14) as the input condition, the Start/Stop Command Bit (word n, bit 00) is turned ON using the OUT instruction. At the same time, the Enable External Output Command Bit (word n, bit 07) is turned ON using the OUT instruction.

Program Examples

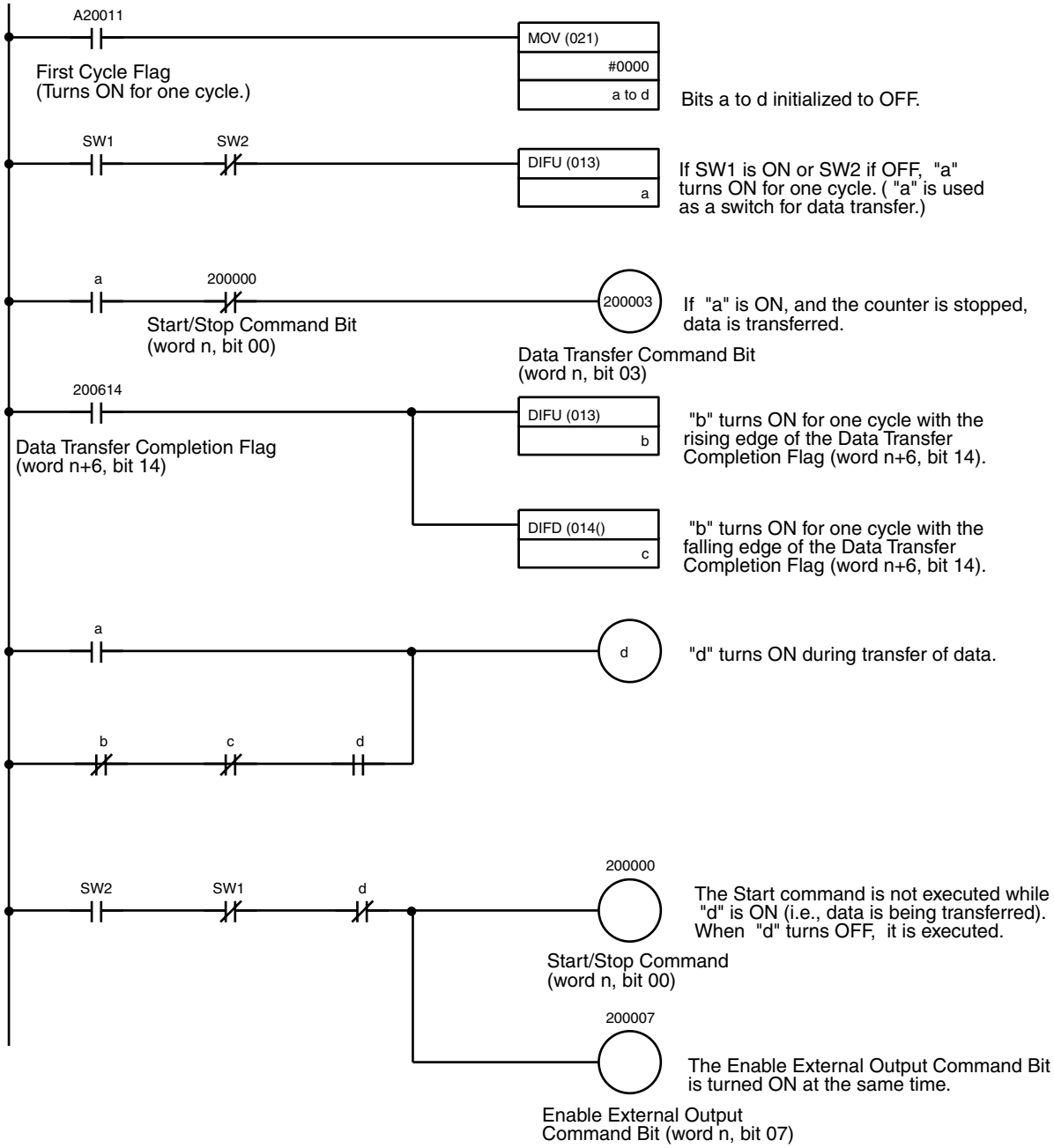

Transferring Data Using the IOWR Instruction

- With the execution start bit as the input condition, the IOWR instruction is executed and the present value of counter 1 is transferred to the High-speed Counter Unit.
- The Equals Flag turns ON when data has been transferred normally using the IOWR instruction. If the data could not be transferred normally, the Equals Flag turns OFF and an error is registered with the N.C. condition of the Equals Flag.
- When the Data Transfer Completion Flag turns ON (word n+6, bit 14), a signal indicating that writing has been completed turns ON.

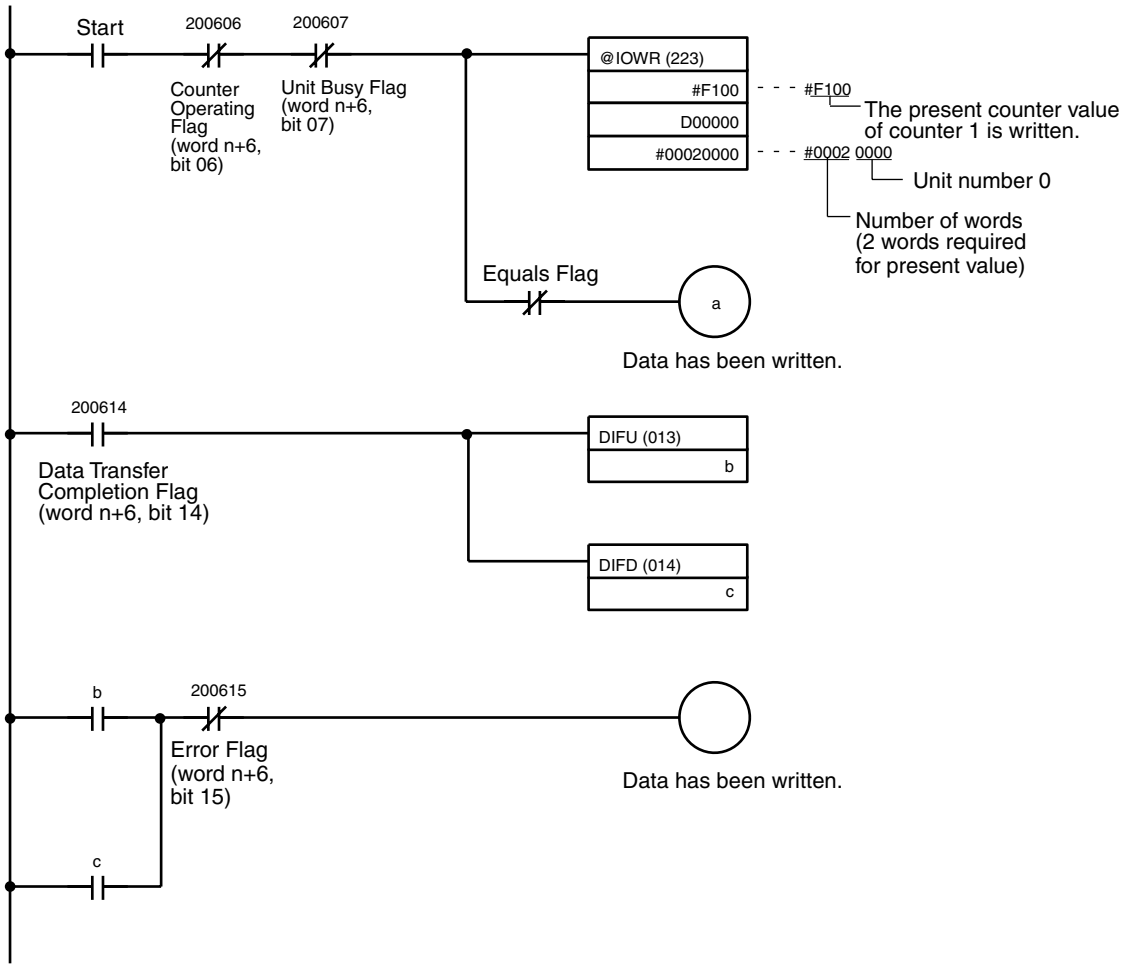

Index

Numerics

1 indicator, 12
2 indicator, 12

A–B

A indicator, 12
allocation
  data area
    switch settings, 135
  DM, 27
    circular mode, 137
    cumulative gate mode, 142
    gate mode, 142
    linear mode, 137
    preset mode, 139
    sampling mode, 142
    simple counter mode, 135
    unit number setting, 65
  IR, 27
    unit number setting, 65
Am26LS31, 21
B indicator, 12
BCD count values, 10
belt conveyor, 3

C

C200H-CT001-V1
  comparison, 133
CH1 indicator, 12
CH2 indicator, 12
chatter
  prevention, 22
circular mode, 31
  control code, 119
  DM allocation, 48, 137
  IR allocation, 52
  program example
    drum function, 82
  range, 32
    lower limit, 33
    maximum count value, 32
    output pattern, 33
    upper limit, 33
connector pins, 16
  external, 16
connectors
  assembly, 17
  wiring, 16
control code
  circular mode, 119
  cumulative gate mode, 121
  gate mode, 121
  IORD, 116
  IOWR, 117
  linear mode, 119
  preset mode, 120
  sampling mode, 121
  simple counter mode, 119
control mode
  DM area settings
    counting function, 103
counter input type
  DM area settings
    counting function, 103
    drum function, 69
    preset function, 88
counter preset values
  DM area settings
    preset function, 89
  range
    preset mode, 35
counter reset mode, 41
counting function, 26, 102
  cumulative gate mode
    program example, 109
  DM area settings, 102
  gate mode
    program example, 107
  I/O signal
    timing chart, 105
  IR area settings, 103
  sampling mode
    program example, 111
counting speed, 9
cumulative gate mode, 37
  control code, 121
  DM allocation, 60, 142
  I/O signal
    timing chart, 106
  IR allocation, 61
  program example
    counting function, 109
cycle time
  PC, 42

D

data area
  allocation
    switch settings, 135
data transfer
  flags
    timing, 126
  IOWR, 121
data transfer programs
  drum function, 75
  format
    drum function, 76
  present counter value change
    drum function, 78
  preset function, 93
  preset value change
    preset function, 95
  range change program example
    drum function, 77
data transfer timing, 42
data type
  DM area settings
    counting function, 103

drum function, 69
preset function, 87
IOWR, 121
destination address
IORD, 117
destination unit number
IOWR, 117
dimensions, 11
direction inputs, 40
DM
allocation, 27
circular mode, 48, 137
cumulative gate mode, 60, 142
gate mode, 60, 142
linear mode, 48, 137
preset mode, 54, 139
sampling mode, 60, 142
simple counter mode, 46, 135
DM area settings
control mode
counting function, 103
counter input type
counting function, 103
drum function, 69
preset function, 88
counter preset values
preset function, 89
counting function, 102
data type
counting function, 103
drum function, 69
preset function, 87
drum function, 68
external output mode
drum function, 69
preset function, 87
external output ON/OFF count value
preset function, 88
forced external output
drum function, 69
preset function, 87
lower and upper limits
drum function, 70
maximum count value
drum function, 70
operating mode
counting function, 102
drum function, 69
preset function, 87
output pattern
drum function, 71
range enabled/disabled
drum function, 70
reset mode
drum function, 69
preset function, 88
drum function, 26, 68
circular mode
program example, 82
data transfer programs, 75
DM area settings, 68
I/O signal
timing chart, 74
IR area settings, 71
linear mode
program example, 80

E

Encoder Conversion Adapter, 22
ERR indicator, 12, 128
error codes, 129
errors
indicators, 128
monitored with PC, 130
output, 128
Special I/O Unit, 130
external output configuration, 19
external output indicators, 12
external output mode
DM area settings
drum function, 69
preset function, 87
external output ON/OFF count value
DM area settings
preset function, 88
external output pattern
preset function, 86
external outputs
preset mode, 34

F

features, 2
flags
timing
data transfer, 126
IOWR, 126
forced external output
DM area settings
drum function, 69
preset function, 87
format
data transfer programs
drum function, 76

G–H

gate mode, 36
control code, 121
DM allocation, 60, 142
I/O signal
timing chart, 105
IR allocation, 61
program example
counting function, 107
hexadecimal count values, 10

I

I/O circuit
configurations, 18

external output, 19
input, 18
line driver input, 19
indicators, 12, 128
input characteristics, 7
input configuration, 18
inputs
direction, 40
offset phase, 39
pulse, 40
up and down pulse, 40
installation
precautions, xv
internal control IN1 and IN2
IR area settings
counting function, 104
IORD, 116
control code, 116
destination address, 117
number of words, 116
program examples, 123
source unit number, 116
IOWR, 117
control code, 117
data transfer, 121
data type, 121
destination unit number, 117
flags
timing, 126
number of words, 117
program examples, 124
source address, 118
IR
allocation, 27
circular mode, 52
cumulative gate mode, 61
gate mode, 61
linear mode, 52
preset mode, 58
sampling mode, 61
simple counter mode, 46
IR area settings
change ranges
drum function, 72
counter reset
drum function, 71
preset function, 89
counting function, 103
drum function, 71
external output enabled
drum function, 72
preset function, 90
forced external outputs 0 to 7
drum function, 72
preset function, 90
internal control IN1 and IN2
counting function, 104
operating counter preset value number
preset function, 89, 91
operating range number
drum function, 73
output status
drum function, 74
preset function, 91
present counter value
counting function, 104
preset counter value
drum function, 73
preset function, 90
preset function, 89
read error
counting function, 104
drum function, 72
preset function, 90
sampling time
drum function, 103
set time
drum function, 103
start
drum function, 89
start/stop
drum function, 71
status data
counting function, 105
drum function, 73
preset function, 91

L

line driver input configuration, 19
linear mode, 29
control code, 119
DM allocation, 48, 137
IR allocation, 52
program example
drum function, 80
range, 29
lower limit, 30
output pattern, 31
upper limit, 30
lower and upper limits
DM area settings
drum function, 70

M–N

maximum count value
circular mode, 32
DM area settings
drum function, 70
modes
operating, 26
mounting
number of Units, 4
multi-conductor cables, 17
nomenclature, 12
number of words
IORD, 116
IOWR, 117

O

offset phase inputs, 39
operating counter preset value number
  IR area settings
    preset function, 89
operating mode
  DM area settings
    counting function, 102
    drum function, 69
    preset function, 87
operating procedure, 64
output characteristics, 8
output control
  range
    preset mode, 34
output pattern
  circular mode, 33
  DM area settings
    drum function, 71
  linear mode, 31

P

PC
  monitored errors, 130
precautions
  general, xiii
  wiring, 18
present counter value change
  program example
    drum function, 78
preset function, 26, 86
  data transfer programs, 93
  external output pattern, 86
  I/O signal
    timing chart, 92
  IR area settings, 89
  preset mode
    program example, 97
preset mode, 33
  control code, 120
  DM allocation, 54, 139
  external outputs, 34
  IR allocation, 58
  program example
    preset function, 97
  range, 34
    counter preset values, 35
    output control, 34
preset value change
  program example
    preset function, 95
Programmable Controller
  See also PC
programs
  data transfer
    drum function, 75
    preset function, 93
pulse inputs, 40

R

range, 29
  configuration
    circular mode, 32
    linear mode, 29
    preset mode, 34
    sampling mode, 38
  lower limit
    circular mode, 33
    linear mode, 30
  maximum count value
    circular mode, 32
  output pattern
    circular mode, 33
    linear mode, 31
  upper limit
    circular mode, 33
    linear mode, 30
range change
  program example
    drum function, 77
range enabled/disabled
  DM area settings
    drum function, 70
ratings, 9
read error
  IR area settings
    counting function, 104
reset mode
  DM area settings
    drum function, 69
    preset function, 88
Restart Flags
  Special I/O Unit, 132
RUN indicator, 12

S

sampling mode, 37
  control code, 121
  DM allocation, 60, 142
  I/O signal
    timing chart, 106
  IR allocation, 61
  program example
    counting function, 111
  range, 38
  sampling time, 38
sampling time
  IR area settings
    drum function, 103
  sampling mode, 38
set time
  IR area settings
    drum function, 103
simple counter mode
  control code, 119
  DM allocation, 46, 135
  IR allocation, 46
source address

IOWR, 118
source unit number
IORD, 116
Special I/O Unit
errors, 130
Restart Flags, 132
specifications, 6, 68
counting function, 102
drum function, 68
preset function, 86
start
IR area settings
drum function, 89
start/stop
change ranges
drum function, 72
counter reset
drum function, 71
preset function, 89
external output enabled
drum function, 72
preset function, 90
forced external outputs 0 to 7
drum function, 72
preset function, 90
IR area settings
drum function, 71
operating counter preset value number
preset function, 91
operating range number
drum function, 73
output status
drum function, 74
preset function, 91
present counter value
counting function, 104
preset counter value
drum function, 73
preset function, 90
read error
drum function, 72
preset function, 90
status data
counting function, 105
drum function, 73
preset function, 91
switches, 13
rear setting, 13
settings, 13
data area, 135
system configuration, 3

T–U

timing chart
I/O signal
counting function, 105
cumulative gate mode, 106
drum function, 74
gate mode, 105
preset function, 92
sampling mode, 106
unit numbers
setting
DM, 65
IR, 65
up and down pulses input, 40

W

wiring
12-VDC voltage-output encoder
sink load, 20
24-VDC open-collector encoder, 20
5-VDC voltage-output encoder
source load, 21
connectors, 16
Encoder Conversion Adapter, 22
external control inputs, 22
external outputs, 23
line-driver output encoder
Am26LS31, 21
precautions, 18

Revision History

A manual revision code appears as a suffix to the catalog number on the front cover of the manual.

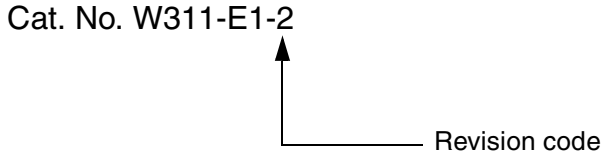

The following table outlines the changes made to the manual during each revision. Page numbers refer to the previous version.

Revision code	Date	Revised content
1	June 1996	Original production
2	December 2000	*Appendix D* was added with this revision. In addition, the following changes were made. **Page xii:** Changes and additions made to precautionary information in several places. **Page 10:** Numerical changes made in several places. **Page 13:** Models added to note under first table. **Page 19:** Minor changes made to second diagram. **Page 23:** Voltage value changed in diagram. **Page 47:** Word addresses changed in several places. **Page 56:** Minor change made to table layout. **Page 66:** Precautionary information added after table.