Cat. No. W378-E1-02

生産終了
DISCONTINUED

SYSMAC CS Series
CS1W-HIO01-V1/HCP22-V1/HCA22-V1/HCA12-V1

Customizable Counter Units

OPERATION MANUAL

OMRON

CS1W-HIO01-V1/HCP22-V1/HCA22-V1/ HCA12-V1

Customizable Counter Units

Operation Manual

Revised December 2003

Notice:

OMRON products are manufactured for use according to proper procedures by a qualified operator and only for the purposes described in this manual.

The following conventions are used to indicate and classify precautions in this manual. Always heed the information provided with them. Failure to heed precautions can result in injury to people or damage to property.

⚠ **DANGER**	Indicates an imminently hazardous situation which, if not avoided, will result in death or serious injury.
⚠ **WARNING**	Indicates a potentially hazardous situation which, if not avoided, could result in death or serious injury.
⚠ **Caution**	Indicates a potentially hazardous situation which, if not avoided, may result in minor or moderate injury, or property damage.

OMRON Product References

All OMRON products are capitalized in this manual. The word “Unit” is also capitalized when it refers to an OMRON product, regardless of whether or not it appears in the proper name of the product.

The abbreviation “Ch,” which appears in some displays and on some OMRON products, often means “word” and is abbreviated “Wd” in documentation in this sense.

The abbreviation “PLC” means Programmable Controller. “PC” is used, however, in some Programming Device displays to mean Programmable Controller.

Visual Aids

The following headings appear in the left column of the manual to help you locate different types of information.

Note		Indicates information of particular interest for efficient and convenient operation of the product.
Reference		Indicates supplementary information on related topics that may be of interest to the user.
1,2,3...	1.	Indicates lists of one sort or another, such as procedures, checklists, etc.

© OMRON, 2001

All rights reserved. No part of this publication may be reproduced, stored in a retrieval system, or transmitted, in any form, or by any means, mechanical, electronic, photocopying, recording, or otherwise, without the prior written permission of OMRON.

No patent liability is assumed with respect to the use of the information contained herein. Moreover, because OMRON is constantly striving to improve its high-quality products, the information contained in this manual is subject to change without notice. Every precaution has been taken in the preparation of this manual. Nevertheless, OMRON assumes no responsibility for errors or omissions. Neither is any liability assumed for damages resulting from the use of the information contained in this publication.

TABLE OF CONTENTS

PRECAUTIONS xi

1 Intended Audience xii
2 General Precautions xii
3 Safety Precautions xii
4 Operating Environment Precautions xiii
5 Application Precautions xiv
6 Data Backup xvi
7 Conformance to EC Directives xviii

SECTION 1
Features and System Configuration 1

1-1 Outline 2
1-2 Models and System Configurations 14

SECTION 2
Specifications 19

2-1 Performance Specifications 20
2-2 Contact I/O Specifications (All Units) 33

SECTION 3
Nomenclature, Installation, and Wiring 35

3-1 Names and Functions of Parts 36
3-2 Installation 39
3-3 Wiring 42
3-4 Programming Devices 53
3-5 Fail-safe Circuits 56

SECTION 4
Exchanging Data with the CPU Unit 59

4-1 Overview 60
4-2 Words Allocated in CIO Area 63
4-3 Words Allocated in DM Area 67
4-4 LR Area 71
4-5 Difference between I/O Refreshing in Customizable Counter Units and That in Other Special I/O Units 72

SECTION 5
Unit Setup Area 77

5-1 Unit Setup Area 78

TABLE OF CONTENTS

SECTION 6
I/O Memory 85

6-1 Overview 86
6-2 Details 89
6-3 SR Area 93
6-4 AR Area 98

SECTION 7
Special Functions 119

7-1 Outline 121
7-2 Interrupt Functions 122
7-3 Interrupt Inputs 124
7-4 Executing Interrupt Tasks in the CPU Unit 125
7-5 Pulse Inputs 126
7-6 Pulse Outputs 130
7-7 Analog Outputs 138
7-8 Functions Compatible with Servo Drivers with Absolute Encoders 142
7-9 Analog Input Functions 154
7-10 Virtual Pulse Output Function (-V1 unit with lot No. 0209__or later only) 161
7-11 Constant Cycle Time Over Clear Function 165
7-12 Ladder Library Function 166
7-13 Back Up Function 175
7-14 Improved Instructions 178

SECTION 8
Unit Operation and Processing Time 185

8-1 Customizable Counter Unit Operation 186
8-2 Power Interruptions 187
8-3 Cycle Time 189

SECTION 9
Troubleshooting 203

9-1 Types of Troubleshooting Information 204
9-2 Error Log 204
9-3 Troubleshooting Tables 206
9-4 User-defined Errors 212
9-5 Troubleshooting Flowcharts 213

Appendix

A Precautions when Using the CX-Programmer 221

Index 225

Revision History 231

About this Manual:

This manual describes the installation and operation of the CS1W-HIO01-V1, CS1W-HCP22-V1, CS1W-HCA22-V1 and CS1W-HCA12-V1 Customizable Counter Units and includes the sections described below. The Customizable Counter Units provide both normal contact I/O with special I/O as ideal control capabilities for many applications. The Customizable Counter Units are classified as CS-series Special I/O Units.

Please read this manual and all other manuals for the Customizable Counter Units listed below carefully and be sure you understand the information provided before attempting to install or operate a Customizable Counter Unit.

Manual	Cat. No.	Contents
CS1W-HIO01-V1/HCP22-V1/ HCA22-V1/HCA12-V1 Customizable Counter Units Operation Manual (this manual)	W378	Describes the hardware and software operation of the Customizable Counter Units.
CS1W-HIO01-V1/HCP22-V1/ HCA22-V1/HCA12-V1 Customizable Counter Units Programming Manual	W384	Describes the memory areas and programming instructions of the Customizable Counter Units.
SYSMAC WS02-CX-□□-EV3 CX-Programmer User Manual	W414	Provide information on how to use the CX-Programmer, a Windows-based Programming Device that supports the CQM1H-series PLCs.
CQM1H Series Programmable Controllers Operation Manual	W363	Describes Programming Console operations that can be used connected to the Customizable Counter Units.

Section 1 describes the features of the Customizable Counter Units and the devices required in an extended system configuration.

Section 2 provides performance specifications and I/O specifications for the Customizable Counter Unit.

Section 3 provides the names of the different components of the Customizable Counter Unit and explains the procedures required for installing and wiring the Unit.

Section 4 provides details on the way in which data is exchanged between the Customizable Counter Unit and the CPU Unit.

Section 5 provides details on the settings made using the Unit Setup Area in the Customizable Counter Unit.

Section 6 provides details of the settings made using the I/O memory areas in the Customizable Counter Unit.

Section 7 provides information on interrupts, pulse inputs, pulse outputs, and analog outputs.

Section 8 explains the internal processing of the Customizable Counter Unit, and the time required for processing and execution.

Section 9 provides information on troubleshooting errors that can occur with the Customizable Counter Unit.

The ***Appendix*** provides precautions required when programming or monitoring the Customizable Counter Unit with the CX-Programmer.

⚠ WARNING Failure to read and understand the information provided in this manual may result in personal injury or death, damage to the product, or product failure. Please read each section in its entirety and be sure you understand the information provided in the section and related sections before attempting any of the procedures or operations given.

PRECAUTIONS

This section provides general precautions for using the CS1W-HIO01-V1, CS1W-HCP22-V1, CS1W-HCA22-V1 and CS1W-HCA12-V1 Customizable Counter Units.

The information contained in this section is important for the safe and reliable application of the Customizable Counter Units. You must read this section and understand the information contained before attempting to set up or operate a Customizable Counter Unit.

1 Intended Audience xii
2 General Precautions xii
3 Safety Precautions xii
4 Operating Environment Precautions. xiii
5 Application Precautions xiv
6 Data Backup xvi
6-1 Automatic Backup xvi
6-2 User Programming xvii
6-3 Backing Up DM Area to Flash Memory xviii
7 Conformance to EC Directives. xviii
7-1 Applicable Directives. xviii
7-2 Concepts. xviii
7-3 Conformance to EC Directives xix

1 Intended Audience

This manual is intended for the following personnel, who must also have knowledge of electrical systems (an electrical engineer or the equivalent).

- Personnel in charge of installing FA systems.
- Personnel in charge of designing FA systems.
- Personnel in charge of managing FA systems and facilities.

2 General Precautions

The user must operate the product according to the performance specifications described in the operation manuals.

Before using the product under conditions which are not described in the manual or applying the product to nuclear control systems, railroad systems, aviation systems, vehicles, combustion systems, medical equipment, amusement machines, safety equipment, and other systems, machines, and equipment that may have a serious influence on lives and property if used improperly, consult your OMRON representative.

Make sure that the ratings and performance characteristics of the product are sufficient for the systems, machines, and equipment, and be sure to provide the systems, machines, and equipment with double safety mechanisms.

This manual provides information for programming and operating the Unit. Be sure to read this manual before attempting to use the Unit and keep this manual close at hand for reference during operation.

⚠ WARNING It is extremely important that a PLC and all PLC Units be used for the specified purpose and under the specified conditions, especially in applications that can directly or indirectly affect human life. You must consult with your OMRON representative before applying a PLC System to the above-mentioned applications.

3 Safety Precautions

⚠ WARNING Do not attempt to take any Unit apart while the power is being supplied. Doing so may result in electric shock.

⚠ WARNING Do not touch any of the terminals or terminal blocks while the power is being supplied. Doing so may result in electric shock.

⚠ WARNING Do not attempt to disassemble, repair, or modify any Units. Any attempt to do so may result in malfunction, fire, or electric shock.

⚠ WARNING Do not touch the Power Supply Unit while power is being supplied or immediately after power has been turned OFF. Doing so may result in electric shock.

⚠ WARNING Provide safety measures in external circuits, i.e., not in the Programmable Controller (CPU Unit including associated Units; referred to as “PLC”), in order to ensure safety in the system if an abnormality occurs due to malfunction of the PLC or another external factor affecting the PLC operation. Not doing so may result in serious accidents.

- Emergency stop circuits, interlock circuits, limit circuits, and similar safety measures must be provided in external control circuits.
- The PLC will turn OFF all outputs when its self-diagnosis function detects any error or when a severe failure alarm (FALS) instruction is executed. As a countermeasure for such errors, external safety measures must be provided to ensure safety in the system.
- The PLC outputs may remain ON or OFF due to deposition or burning of the output relays or destruction of the output transistors. As a countermeasure for such problems, external safety measures must be provided to ensure safety in the system.
- When the 24-VDC output (service power supply to the PLC) is overloaded or short-circuited, the voltage may drop and result in the outputs being turned OFF. As a countermeasure for such problems, external safety measures must be provided to ensure safety in the system.

⚠ **Caution** Execute online edit only after confirming that no adverse effects will be caused by extending the cycle time. Otherwise, the input signals may not be readable.

⚠ **Caution** Confirm safety at the destination node before transferring a program to another node or changing contents of the I/O memory area. Doing either of these without confirming safety may result in injury.

⚠ **Caution** Tighten the screws on the terminal block of the AC power supply to the torque specified in the operation manual. The loose screws may result in burning or malfunction.

4 Operating Environment Precautions

⚠ **Caution** Do not operate the control system in the following locations:

- Locations subject to direct sunlight.
- Locations subject to temperatures or humidity outside the range specified in the specifications.
- Locations subject to condensation as the result of severe changes in temperature.
- Locations subject to corrosive or flammable gases.
- Locations subject to dust (especially iron dust) or salts.
- Locations subject to exposure to water, oil, or chemicals.
- Locations subject to shock or vibration.

⚠ **Caution** Take appropriate and sufficient countermeasures when installing systems in the following locations:

- Locations subject to static electricity or other forms of noise.
- Locations subject to strong electromagnetic fields.
- Locations subject to possible exposure to radioactivity.
- Locations close to power supplies.

⚠ **Caution** The operating environment of the PLC System can have a large effect on the longevity and reliability of the system. Improper operating environments can lead to malfunction, failure, and other unforeseeable problems with the PLC System. Be sure that the operating environment is within the specified conditions at installation and remains within the specified conditions during the life of the system.

5 Application Precautions

⚠ **WARNING** Always heed these precautions. Failure to abide by the following precautions could lead to serious or possibly fatal injury.

- Always connect to a ground of 100 Ω or less when installing the Units. Not connecting to a ground of 100 Ω or less may result in electric shock.
- A ground of 100 Ω or less must be installed when shorting the GR and LG terminals on the Power Supply Unit.
- Always turn OFF the power supply to the PLC before attempting any of the following. Not turning OFF the power supply may result in malfunction or electric shock.
  - Mounting or dismounting Power Supply Units, I/O Units, CPU Units, Inner Boards, or any other Units.
  - Assembling the Units.
  - Setting DIP switches or rotary switches.
  - Connecting cables or wiring the system.
  - Connecting or disconnecting the connectors.

⚠ **Caution** Failure to abide by the following precautions could lead to faulty operation of the PLC or the system, or could damage the PLC or PLC Units. Always heed these precautions.

- Always turn ON power to the PLC before turning ON power to the control system. If the PLC power supply is turned ON after the control power supply, temporary errors may result in control system signals because the output terminals on DC Output Units and other Units will momentarily turn ON when power is turned ON to the PLC.
- Fail-safe measures must be taken by the customer to ensure safety in the event that outputs from Output Units remain ON as a result of internal circuit failures, which can occur in relays, transistors, and other elements.
- Fail-safe measures must be taken by the customer to ensure safety in the event of incorrect, missing, or abnormal signals caused by broken signal lines, momentary power interruptions, or other causes.
- Interlock circuits, limit circuits, and similar safety measures in external circuits (i.e., not in the Programmable Controller) must be provided by the customer.
- Always use the power supply voltages specified in the operation manuals. An incorrect voltage may result in malfunction or burning.
- Take appropriate measures to ensure that the specified power with the rated voltage and frequency is supplied in places where the power supply is unstable. An incorrect power supply may result in malfunction.

- Install external breakers and take other safety measures against short-circuiting in external wiring. Insufficient safety measures against short-circuiting may result in burning.
- Do not apply voltages to the Input Units in excess of the rated input voltage. Excess voltages may result in burning.
- Do not apply voltages or connect loads to the Output Units in excess of the maximum switching capacity. Excess voltage or loads may result in burning.
- Disconnect the functional ground terminal when performing withstand voltage tests. Not disconnecting the functional ground terminal may result in burning.
- Install the Units properly as specified in the operation manuals. Improper installation of the Units may result in malfunction.
- Be sure that all the mounting screws, terminal screws, and cable connector screws are tightened to the torque specified in the relevant manuals. Incorrect tightening torque may result in malfunction.
- Leave the label attached to the Unit when wiring. Removing the label may result in malfunction if foreign matter enters the Unit.
- Remove the label after the completion of wiring to ensure proper heat dissipation. Leaving the label attached may result in malfunction.
- Use crimp terminals for wiring. Do not connect bare stranded wires directly to terminals. Connection of bare stranded wires may result in burning.
- Wire all connections correctly.
- Double-check all wiring and switch settings before turning ON the power supply. Incorrect wiring may result in burning.
- Mount Units only after checking terminal blocks and connectors completely.
- Be sure that the terminal blocks, Memory Units, expansion cables, and other items with locking devices are properly locked into place. Improper locking may result in malfunction.
- Check switch settings, the contents of the DM Area, and other preparations before starting operation. Starting operation without the proper settings or data may result in an unexpected operation.
- Check the user program for proper execution before actually running it on the Unit. Not checking the program may result in an unexpected operation.
- Confirm that no adverse effect will occur in the system before attempting any of the following. Not doing so may result in an unexpected operation.
    - Changing the operating mode of the PLC.
    - Force-setting/force-resetting any bit in memory.
    - Changing the present value of any word or any set value in memory.
- Resume operation only after transferring to the new CPU Unit the contents of the DM Area, HR Area, and other data required for resuming operation. Not doing so may result in an unexpected operation.
- Do not pull on the cables or bend the cables beyond their natural limit. Doing either of these may break the cables.
- Do not place objects on top of the cables or other wiring lines. Doing so may break the cables.

- When replacing parts, be sure to confirm that the rating of a new part is correct. Not doing so may result in malfunction or burning.
- Before touching a Unit, be sure to first touch a grounded metallic object in order to discharge any static build-up. Not doing so may result in malfunction or damage.
- When transporting or storing circuit boards, cover them in antistatic material to protect them from static electricity and maintain the proper storage temperature.
- Do not touch circuit boards or the components mounted to them with your bare hands. There are sharp leads and other parts on the boards that may cause injury if handled improperly.
- Data in the DM Area, error log, EM Area, or Timer/Counter Area may become corrupted if power is not supplied for an extended period of time. Program the PLC to check SR 24914 before starting operation. If SR 24914 is ON, the memory areas that are normally held during power interruptions will not have been held properly (i.e., the data will be corrupted). (The data in the DM Area can be backed up to flash memory by turning ON SR 25200.)

6 Data Backup

6-1 Automatic Backup

Data in the Customizable Counter Units is backed up either by a super capacitor or flash memory, as listed in the following table.

Data	Data backup
DM Area (DM 0000 to DM 6143), EM Area (EM 0000 to EM 2047), error log (DM 6144 to DM 6199), and counter present values. A setting is provided to either enable or disable holding EM Area data. The default is to not hold the data.	RAM with super capacitor
User program, read-only DM Area words (DM 6200 to DM 6599), Unit Setup Area (DM 6600 to DM 6655), expansion instructions information, read/write DM Area words (DM 0000 to DM 6143, see note.)	Flash memory

Note The contents of DM 0000 to DM 6143 are written to flash memory only when SR 25200 (DM Area Backup Bit) is turned ON.

The data in RAM is backed up by the super capacitor for 10 days at 25°C. The backup time varies with the ambient temperature as shown in the following graph.

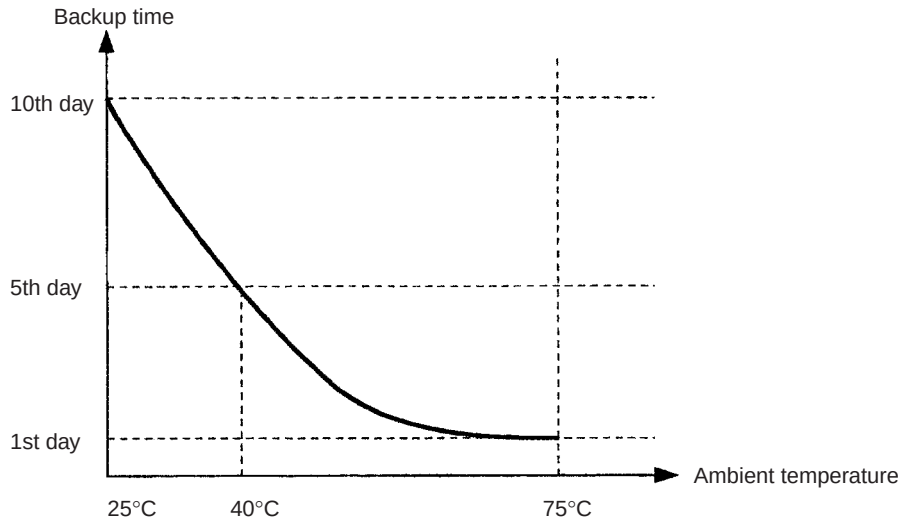

Note The times give above assume that the capacitor is completely charged. Power must be supply to the Unit for at least 15 minutes to completely charge the capacitor.

The data backed up by the capacitor will become unstable or corrupted if the backup time is exceeded.

6-2 User Programming

If the power supply is turned OFF for longer than the data backup time (10 days at 25°C), the data in the DM Area, EM Area, and Error Log, as well as counter present values, will be lost and any data that is read will be unstable.

If the power supply is to be turned OFF for an extended period of time, the contents of DM 0000 to DM 6143 can be backed up in flash memory. The Backup Data Corrupted Flag (SR 24914) can also be used as shown below to detect when backup data (i.e., data in the DM Area, EM Area, and Error Log, as well as counter present values) has become corrupted to perform appropriate error processing.

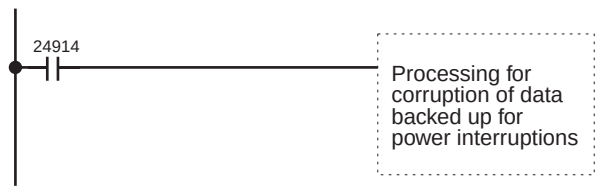

DM 0000 to DM 6143 (read/write portion of DM Area) can be backed up in flash memory by the user as described in the next section.

6-3 Backing Up DM Area to Flash Memory

The contents of DM 0000 to DM 6143 can be written to flash memory by turning ON SR 25200 (DM Flash Memory Backup Bit) in PROGRAM mode. (SR 25200 will turn OFF automatically when transfer has been completed.)

The data stored in flash memory can be read back to DM 0000 to DM 6143 by using the XFER(70) instruction as shown below.

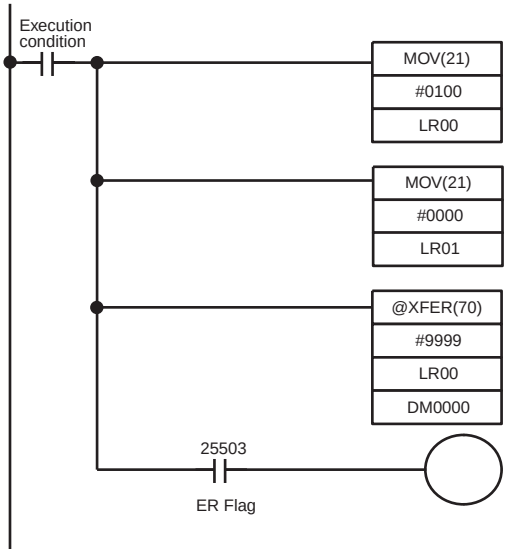

7 Conformance to EC Directives

7-1 Applicable Directives

- EMC Directives
- Low Voltage Directive

7-2 Concepts

EMC Directives

OMRON devices that comply with EC Directives also conform to the related EMC standards so that they can be more easily built into other devices or machines. The actual products have been checked for conformity to EMC standards (see the following note). Whether the products conform to the standards in the system used by the customer, however, must be checked by the customer.

EMC-related performance of the OMRON devices that comply with EC Directives will vary depending on the configuration, wiring, and other conditions of the equipment or control panel in which the OMRON devices are installed. The customer must, therefore, perform final checks to confirm that devices and the overall machine conform to EMC standards.

Note Applicable EMC (Electromagnetic Compatibility) standards are as follows:

EMS (Electromagnetic Susceptibility): EN61000-6-2
EMI (Electromagnetic Interference): EN50081-2
(Radiated emission: 10-m regulations)

Low Voltage Directive

Always ensure that devices operating at voltages of 50 to 1,000 VAC or 75 to 1,500 VDC meet the required safety standards for the PLC (EN61131-2).

7-3 Conformance to EC Directives

The CS1W-HIO01-V1, CS1W-HCP22-V1, CS1W-HCA22-V1 and CS1W-HCA12-V1 Customizable Counter Units comply with EC Directives. To ensure that the machine or device in which the Customizable Counter Unit is used complies with EC directives, the Unit must be installed as follows:

1,2,3...

1. The Customizable Counter Unit must be installed within a control panel.
2. Reinforced insulation or double insulation must be used for the Customizable Counter Unit DC power supplies used for the communications and I/O power supplies.
3. The Customizable Counter Units complying with EC Directives also conform to the Common Emission Standard (EN50081-2). When a Customizable Counter Unit is built into a machine, however, changes can occur, particularly for the radiated emission (10-m regulations), due to the structure of the machine, other connected devices, wiring, etc. The customer must, therefore, perform final checks to confirm that devices and the overall machine using a Customizable Counter Unit conform to EC standards.

SECTION 1
Features and System Configuration

This section describes the features of the Customizable Counter Units and the devices required in an extended system configuration.

1-1 Outline 2
1-1-1 Outline 2
1-1-2 Features 5
1-1-3 Application Examples 7
1-2 Models and System Configurations 14
1-2-1 Models 14
1-2-2 System Configurations 14

1-1 Outline

1-1-1 Outline

The Customizable Counter Units are CS-series Special I/O Units that can be programmed using a ladder program and provide both standard contact I/O and special I/O (including pulse inputs, pulse outputs, and analog outputs). (I/O support depends on the model of the Unit.)

The I/O of a Customizable Counter Unit can be controlled by the ladder program in it without intervention from the program in the CPU Unit to achieve high-speed I/O processing. By customizing a Customizable Counter Unit using its I/O, programming, and interrupt functions, a wide range of applications requiring high-speed response can be implemented in a distributed processing system where the Customizable Counter Unit functions as a coprocessor for the CPU Unit.

Customizable Counter Unit capabilities also facilitate machine modularization and standardization, and make machine and device maintenance much easier.

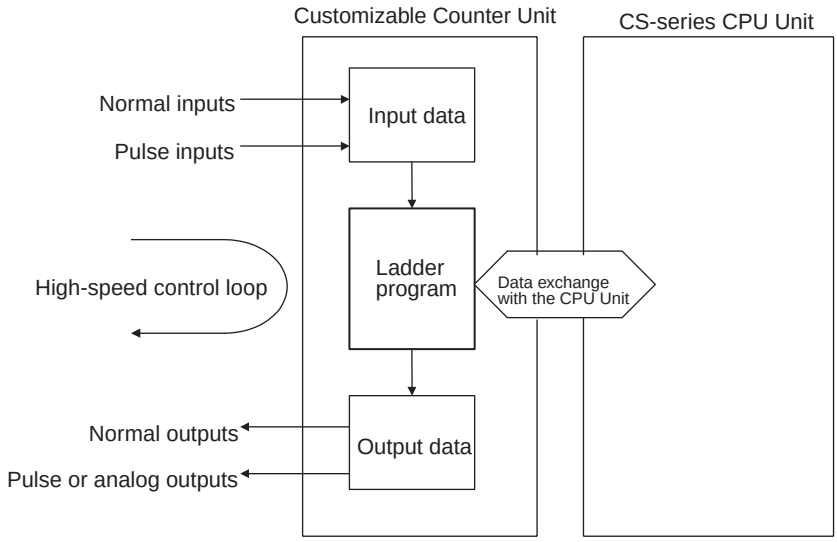

- High-speed I/O processing is enabled by the small-capacity ladder program in the Customizable Counter Unit that achieves a high-speed cycle. The Customizable Counter Unit also supports various types of interrupt programming, enabling it to handle special high-speed applications previously handled by sensor controllers and microcomputer boards. The Customizable Counter Unit can also perform part of the functions previously performed by High-speed Counter Units, Position Control Units, and Analog Output Units.
- Other features include normal interrupts, interval timer interrupts, and high-speed counter interrupts, in addition to a high-precision timer that uses a pulse counter (CS1W-HCP22-V1 only), target value interrupts for a pulse output value (CS1W-HCP22-V1 only), analog output instructions for analog slope control (CS1W-HCA22-V1 only), and range comparisons for the present value of a high-precision pulse output counter timer.
- The CS1W-HCA12-V1 is a special I/O unit of CS-series, having all of 1 high-speed analog input, 1 pulse input (compatible with servo drivers with absolute encoders), 2 high-speed analog outputs, and operations by built-in ladder program (simplified positioning, discriminant and counting processes) within 1 unit. The unit by itself can process both the "linear sensor

control" and "simplified position/speed control", which have been processed separately by the dedicated unit or system in existing models.

1) High-speed input of analog signals from displacement sensors etc, which have been processed in the linear sensor controller in the existing system, enables the ladder program processing.
2) This unit can perform the simplified position controls that have been operated with motion control and position control units in the existing system. Taking in the encoder signals enables the unit to drive the servo driver with analog output. In addition, using the other analog output makes it possible to limit the torque and control inverters.

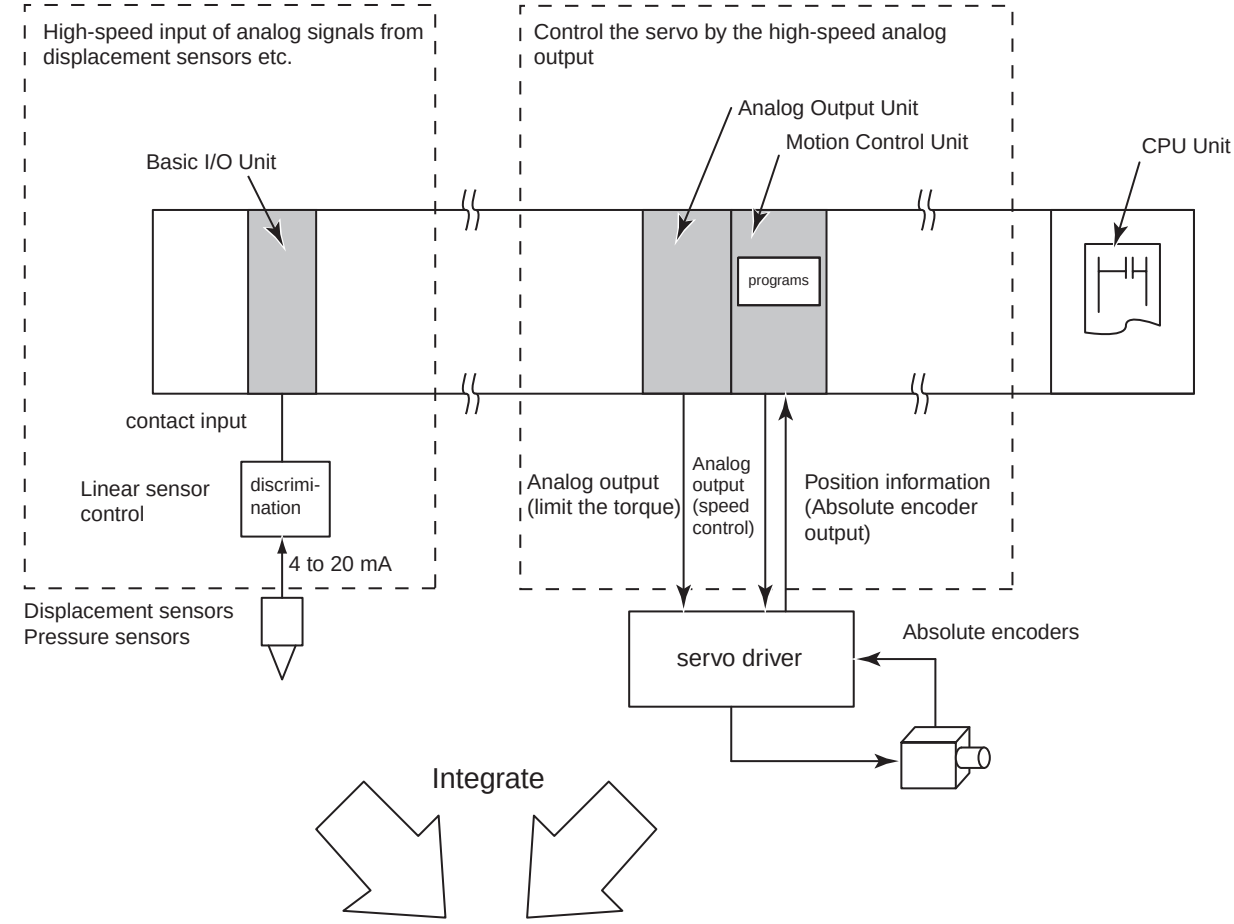

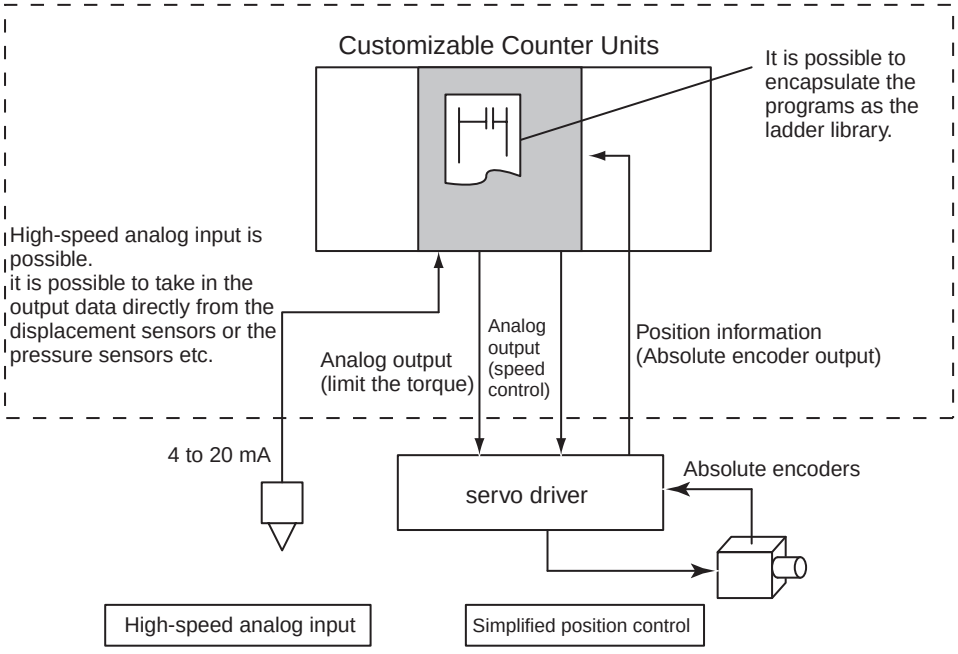

- On the models with "V1" at the rightmost 2 digits, all or a part (subroutine) of the ladder programs in the unit are encapsulated and stored in the Flash memory, also provided in the unit. The real customization is made possible.

1-1-2 Features

Programmable I/O Control

- The program capacity for the ladder program in the Customizable Counter Unit is 4 Kwords.
- Standard features include 12 contact inputs and 8 contact outputs.
- For special I/O, the CS1W-HCP22-V1 provides 2 pulse inputs and 2 pulse outputs, while the CS1W-HCA22-V1 provides 2 pulse inputs and 2 analog outputs.
- Pulse inputs on the CS1W-HCP22-V1 and CS1W-HCA22-V1 can be used for a high-speed counter (50 or 200 kHz, signal phase), and the present value of the counter can be used to create target value interrupts or range comparison bit pattern outputs. Trapezoid pulse (speed) outputs or conditional ON/OFF outputs can thus be created for the present value pulse input. Furthermore, an Electronic Cam Mode can be used to change the pulse output value for absolute positioning or the pulse output frequency for speed control in response to the present value of the pulse input (e.g., for a rotational angle). You can also monitor changes in the present value of the high-speed counter or measure the frequency from the present value of the high-speed counter.
- Pulse outputs on the CS1W-HCP22-V1 can be used for specified frequency outputs with or without acceleration/deceleration, as well as for one-shot outputs (turned ON for a specified time between 0.01 and 9,999 ms). The one-shot pulse output function can also be used to achieve a high-precision pulse counter timer with a minimum time of 0.01 ms, and the present value can be used to create target value interrupts or range comparison bit pattern outputs. Trapezoid pulse (speed) outputs or conditional ON/OFF outputs can thus be created for the present value of the pulse output.
- Analog outputs on the CS1W-HCA22-V1 can be used with the SPED or ACC instruction to step analog outputs or for rising or falling sloped outputs.
    - Combinations with timer instructions enable time-stepped or trapezoid analog outputs.
    - Analog outputs can be set to be held at the peak, current, or cleared value by turning OFF an Output Conversion Enable Bit when required or for errors.
    - The SPED and ACC instructions can be used to control the analog output value independent of the END refresh.
    - The I/O refresh time can be reduced by disabling the analog outputs when they are not required.
- Rate-of-change measurements are possible at a sampling time for the high-speed counter input.
- High-speed counter input frequency measurements can be taken.
- The present value of the high-speed counters can be cleared or held when power is turned ON.
- The high-speed counters can be started and started by controlling the status of a control bit.
- Any of four pulse output ranges can be specified: 6 Hz to 20 kHz, 25 Hz to 50 kHz, 100 Hz to 100 kHz, or 400 Hz to 200 kHz.
- The present value of the pulse output can be reset.

Advanced Processing

- Either high-speed or normal-speed execution can be selected for basic instructions. The execution time for basic instructions in High-speed Execution Mode is approximately twice as fast as the time in Normal Execution Mode. (The program must be approximately 1 Kword or less to use High-speed Execution Mode.) (Example for LD instruction: Normal Execution: 0.4 μs; High-speed Execution: 0.2 μs)
- Faster execution of CTBL and other instructions using table data can be achieved by not holding the EM Area status when power is turned OFF.

Coordinating Operation with the CPU Unit

- Data can be exchanged in three different areas of memory shared with the CPU Unit to perform handshaking and other operations without programming a special interface.
  - Ten words of the CIO Area in the CPU Unit are shared with SR Area Words in the Customizable Counter Unit.
  - Up to 90 words of the DM Area in the CPU Unit can be shared with user-set words in the Customizable Counter Unit.
  - Up to 32 user-set words in the CPU Unit can be shared with LR Area words in the Customizable Counter Unit.
- External interrupt tasks in the CPU Unit can be executed by programming the MCRO instruction in the Customizable Counter Unit. The Customizable Counter Unit can thus activate programming in the CPU Unit depending on the control status of the Customizable Counter Unit to synchronize processing with other Units.

Special I/Os that Can Support Various Applications

- 1 high-speed analog input (CS1W-HCA12-V1)
  High-speed analog input (A/D conversion time = 50 μs) is possible. It supports 0 to 10 V, 1 to 5 V, –10 to 10 V, 0 to 5 V, and 4 to 20 mA. This enables the control supporting the analog input from the displacement and pressure sensors through the linear sensor.
- 2 high-speed analog outputs (CS1W-HCA12-V1)
  High-speed analog output (D/A conversion time = 50 μs) is possible. It supports 0 to 10 V, 1 to 5 V, –10 to 10 V, 0 to 5 V. The combination of this and the use of servo drivers of an analog input type enables the speed control, torque commands, etc. in addition, it can be used for the inverter control (frequency commands).
- 1 input for taking in the absolute encoder output data (CS1W-HCP22-V1/HCA22-V1/HCA12-V1)
  With this input, it is possible to take in the absolute encoder output data directly from the servo drivers manufactured by OMRON, etc. Since it enables the feedback input of the absolute value information, the analog output mentioned above can be used for position control.

Ladder Library Function (All -V1 Models)

These units has the built-in ladder programs. It is possible to encapsulate the programs as the ladder library. The ladder library is saved to the Flash memory in the unit. The encapsulation of the programs to the library enables the "protection of the ladder software assets from the third party" and "execution of the ladder software functions quasi-without programming".

Back-up Function (All -V1 Models)

Through the bit manipulation from the CPU unit, it is possible to back up (write) or restore (read) the data of the unit to or from the memory card. With the use of CS1-H CPU units, the data can be backed up or restored through the simplified back-up operation on the front panel of the CPU unit.

1-1-3 Application Examples

The following are a few examples of the types of applications that are possible by combining various features.

- Contact Input → Programming → Contact Output:
  High-speed interrupt I/O processing or IORF instruction execution can be used to refresh outputs whenever required.
- Pulse Input → Program → Pulse Output for CS1W-HCP22-V1
  - An Electronic Cam Mode can be used to perform a specific absolute positioning operation and speed change for the rotational angle or current position of a workpiece. For example, the encoder output from a main control axis can be input to the high-speed counter, and a specified movement for a target position (number of output pulses) for the followup axis can be defined using linear approximation with the APR instruction. The PULS instruction can also be used to change the number of output pulses (target position) based on the defined value to change the pulse output during operation.
  - Speed control via a pulse output can be achieved in response to the position of a workpiece. The present value of either a high-speed counter or pulse output can be used with a target value interrupt for an interrupt program that contains an instruction to change the frequency, i.e., SPED or ACC.
  - High-speed processing, such as for coating or valve control, can be achieved for a fast-moving object by outputting a one-shot output pulse with a minimum unit of 0.01 ms from a specified position. This is achieved by combining an interrupt for the present value of a pulse input, and then programming a one-shot pulse output using the STIM instruction in the interrupt program.
- Pulse Input → Program → Analog Output for CS1W-HCA22-V1
  - Simple positioning with an analog output can be achieved with an inverter and motor. This is achieved by combining an interrupt for the present value of a pulse input, and then programming a stepped analog output using the SPED instruction or a slopped analog output using the ACC instruction in the interrupt program.
  - Trapezoid torque control with an analog output for the position of a workpiece. This is achieved by combining an interrupt for the present value of a pulse input, and then programming a slopped analog output using the ACC instruction in the interrupt program.
  - Trapezoid analog output for a specified time can be achieved by combining a timer instruction with a slopped analog output using the ACC instruction.
- Torque control (Clamping in molding applications, transfer control in injection-molding applications) (CS1W-HCA12-V1 only) → Position control → pressure control (speed control and torque limit) → position control
  - Using this unit with a servo driver of an analog input type and a pressure sensor enables the control as described below. Note that the servo driver (W series manufactured by OMRON in the example) is to be in the "speed control" mode.

- System configuration

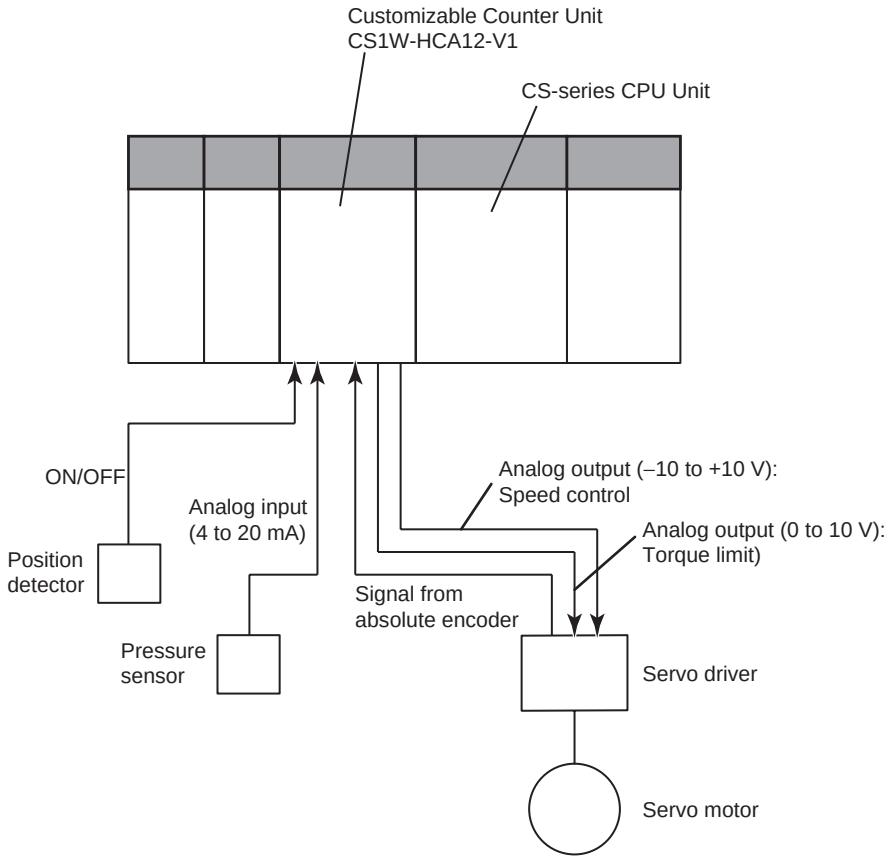

- Operation Process

1) Position control by the unit (CS1W-HCA12-V1):
A speed command is issued to the servo driver with the analog output. The servo driver feeds back the absolute position information with the absolute encoder input. Using the feedback, position control is executed (through the speed command output) following SPED or ACC instructions on the ladder program of the unit.

2) Pressure control by the unit (speed control and torque limit):
Reaching a certain position (position for pressure control) causes the unit to output a speed and a torque limit command for the speed control and torque limit. The pressure control (clamping etc) is executed after the unit converts the analog inputs (load cell, strain gauge, etc) from the pressure sensor to the analog outputs (torque limit by the speed command and torque limit output) for the servo driver.

3) Position control by the unit
Once the operation (molding, etc) is completed, a speed command output from the unit returns the mechanical system to its origin.

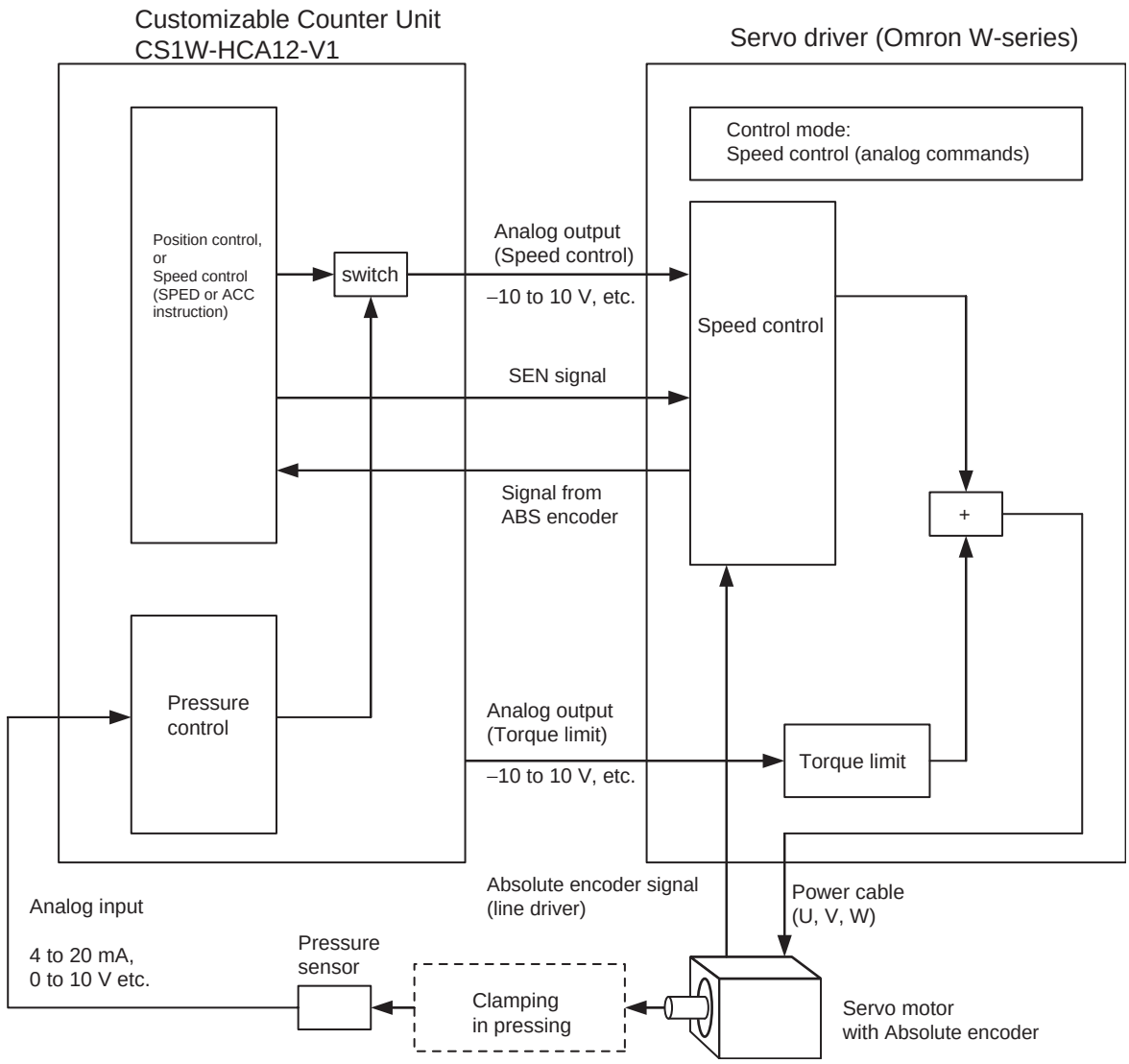

- Linear sensor control (control based on monitoring the ups and downs/distortion/thickness/height/diameter of objects) (CS1W-HCA12-V1 only)
  - Example) Counting ups and downs (piles)
    With the use of a displacement sensor, the unit can count the number of ups and downs (piles) by monitoring the change in the displacement amount as the sensor measures them on the surface of objects moving at high speed.

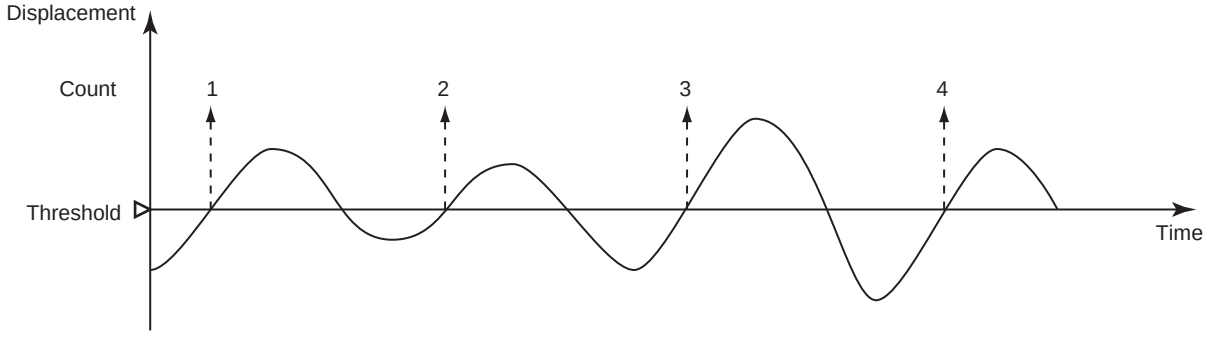

- System configuration

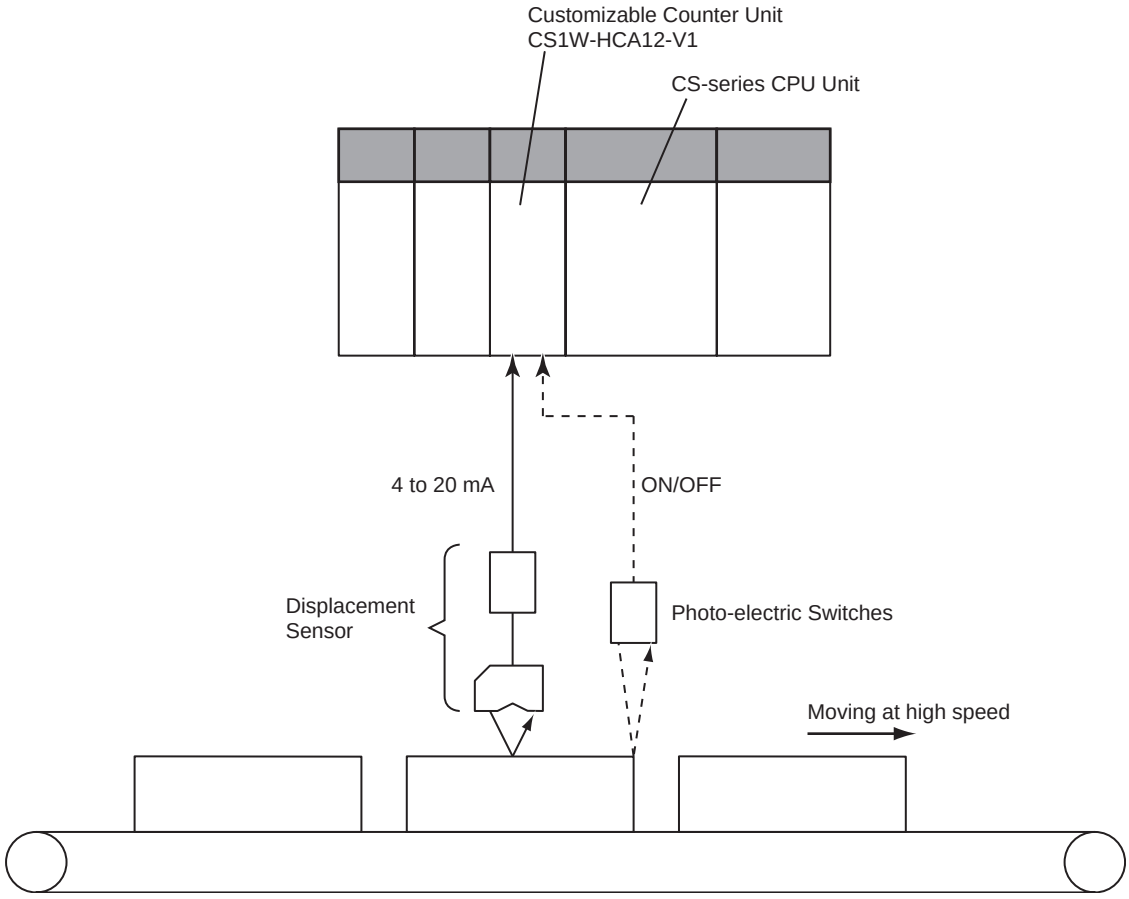

- Operation Process

1) High-speed analog input (immediate refresh)
   4 to 20 mA signals from the displacement sensor are input to and refreshed in the unit at every PRV instruction execution. The displacement data is stored in the areas (Ex: DM) that have the I/O memory.
2) Counting process with the ladder program
   A ladder program has to be arranged (Ex: The unit compares the ranges with BCMP instruction, and the unit counts rises of the results with INC instruction) so that the counter will count the number of times of when the stored displacement data exceed a certain threshold value. The execution of the program will make the unit count.

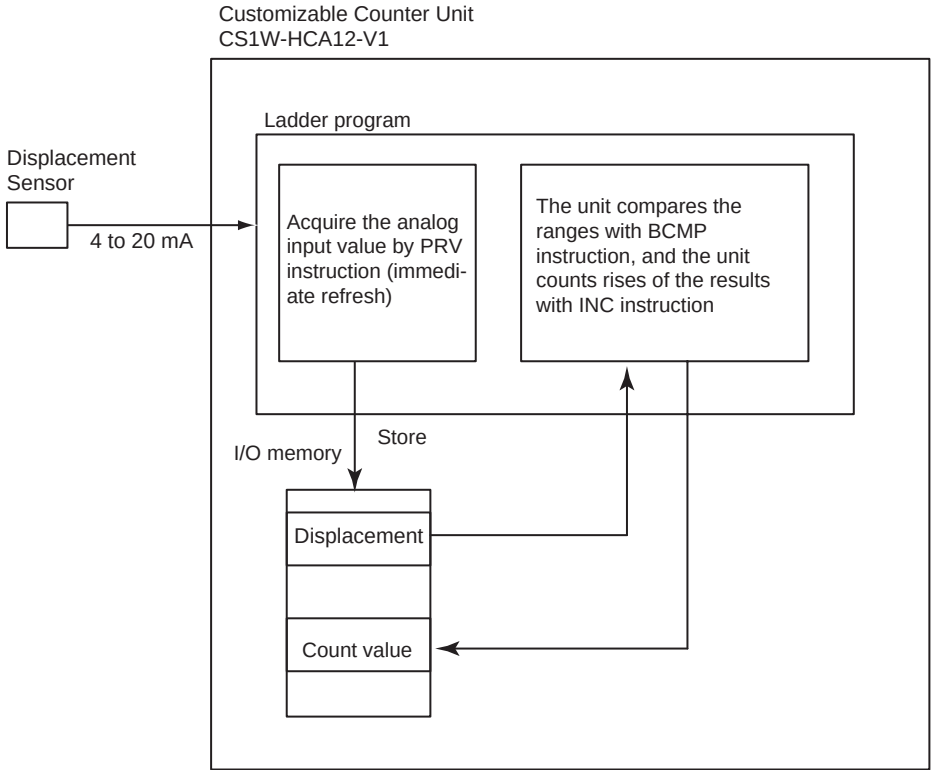

- Linear sensor control (High-speed trace of in-line quality data) (CS1W-HCA12-V1 only)
  - Example) Quality check of high-speed assembling process (injection etc)
    With the use of a displacement sensor, the sensor inputs the characteristic data of objects flowing at high speed, and the unit' data memory stores the input data at constant intervals.
    a) The data can be transferred to the memory card by batch processing, and can be read using the PC for analyses.
    b) The data can be transferred to the CPU unit's data memory by batch processing, and the line plot of the data can be displayed on the screen of the programmable terminal (NS series by OMRON).

• System configuration

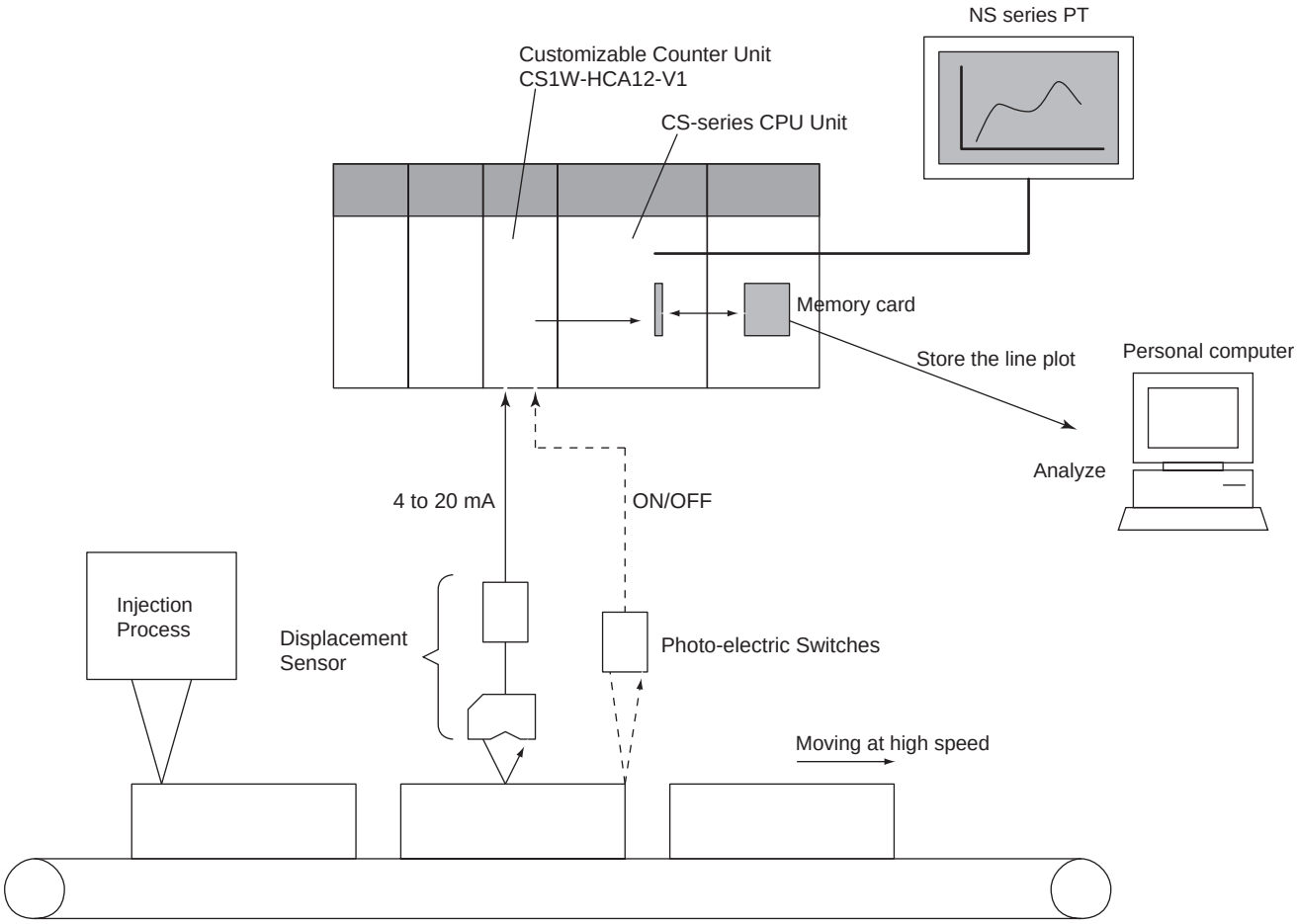

- Operation Process

1) High-speed analog input by scheduled interrupts with the ladder program (immediate refresh)
   The PRV instruction is executed at each of constant executions of subroutine programs with the scheduled interrupts (interval timer). 4 to 20 mA signals from the displacement sensor are input, refreshed, and stored (trace data) in the I/O memory area (Ex. DM) of the main unit.
2) Transferring the traced data to the CPU unit
   The data traced in the unit is transferred to the CPU unit. (Ex. Through the cyclic transfer to DM allocated in the CPU unit)
3) Transferring the data to the memory card inserted in the slot of the CPU unit
   The data in the DM area is stored in the memory card as a data file (.CSV etc) through the FWRIT instruction of the CPU unit.
4) Analysis performed on the spreadsheet software
   Through the memory card adaptor connected to the PC, the data file (.CSV etc) can be analyzed on the spreadsheet software.
5) Line plot displayed on PT (NS series)
   The trace data in the CPU unit can be displayed as the line plot on PT (NS series).

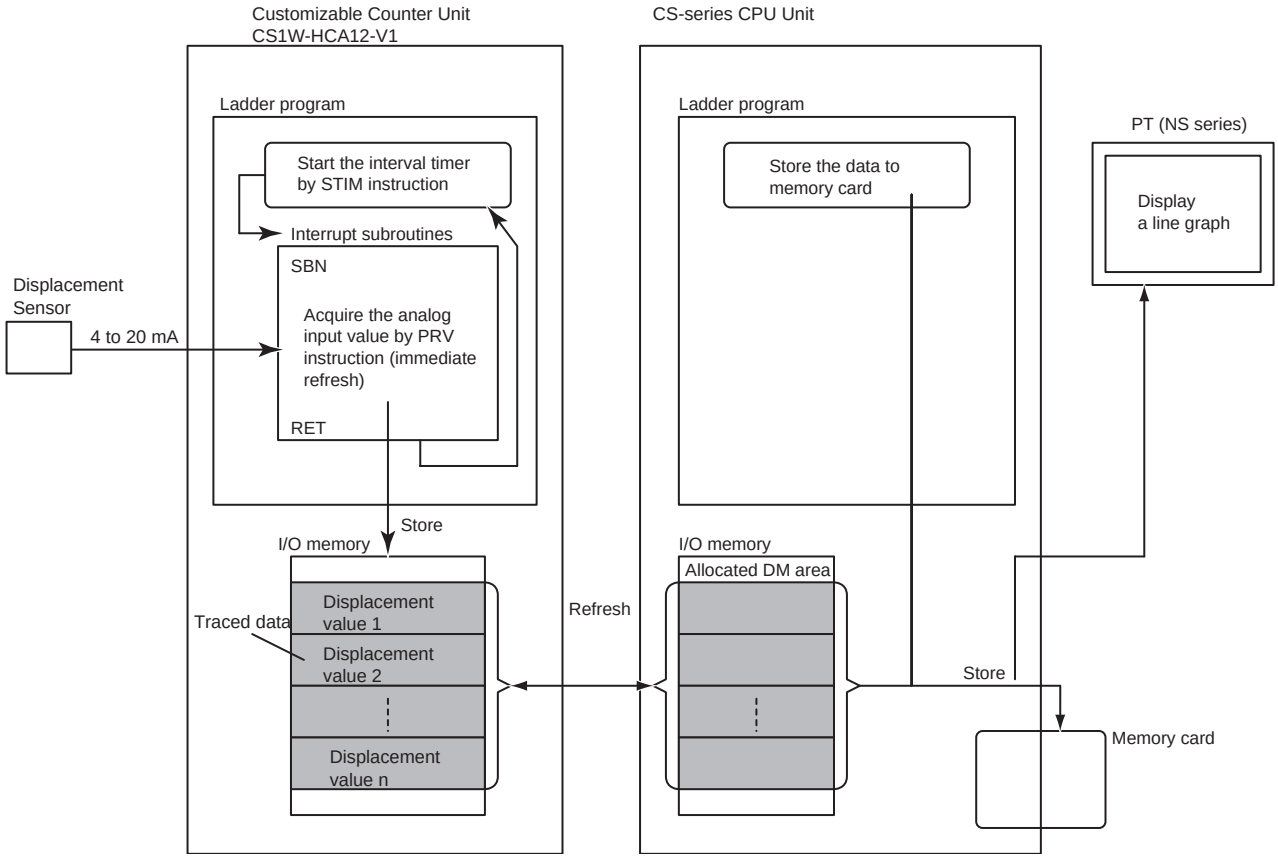

1-2 Models and System Configurations

1-2-1 Models

There are three models of Customizable Counter Unit, all of which are classified as CS1 Special I/O Units.

Model number	Functions
CS1W-HIO01-V1	12 contact inputs, 8 contact outputs
CS1W-HCP22-V1	12 contact inputs, 8 contact outputs, 2 pulse inputs, 2 pulse outputs
CS1W-HCA22-V1	12 contact inputs, 8 contact outputs, 2 pulse inputs, 2 analog outputs
CS1W-HCA12-V1	12 contact inputs, 8 contact outputs, 1 analog input, 1 pulse input (compatible with servo drivers with absolute encoders), 2 analog outputs

1-2-2 System Configurations

CS1W-HIO01-V1(Basic Model)

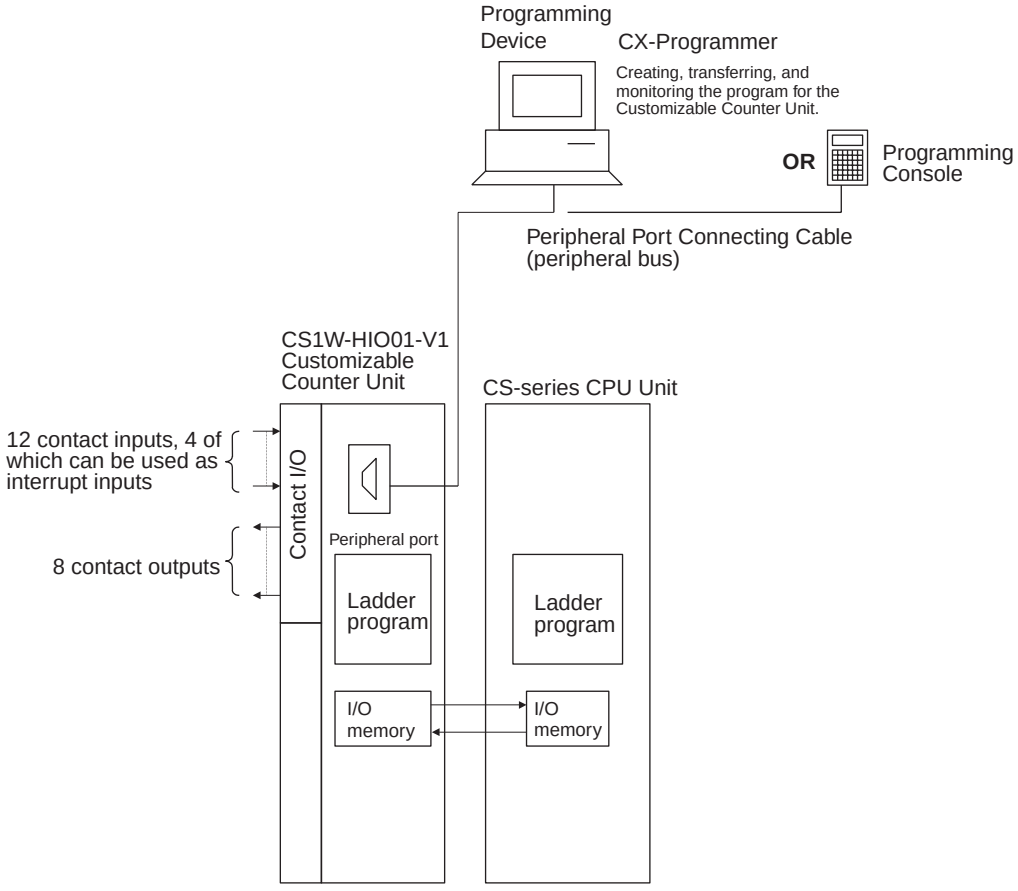

CS1W-HCP22-V1 (Pulse Inputs and Pulse Outputs)

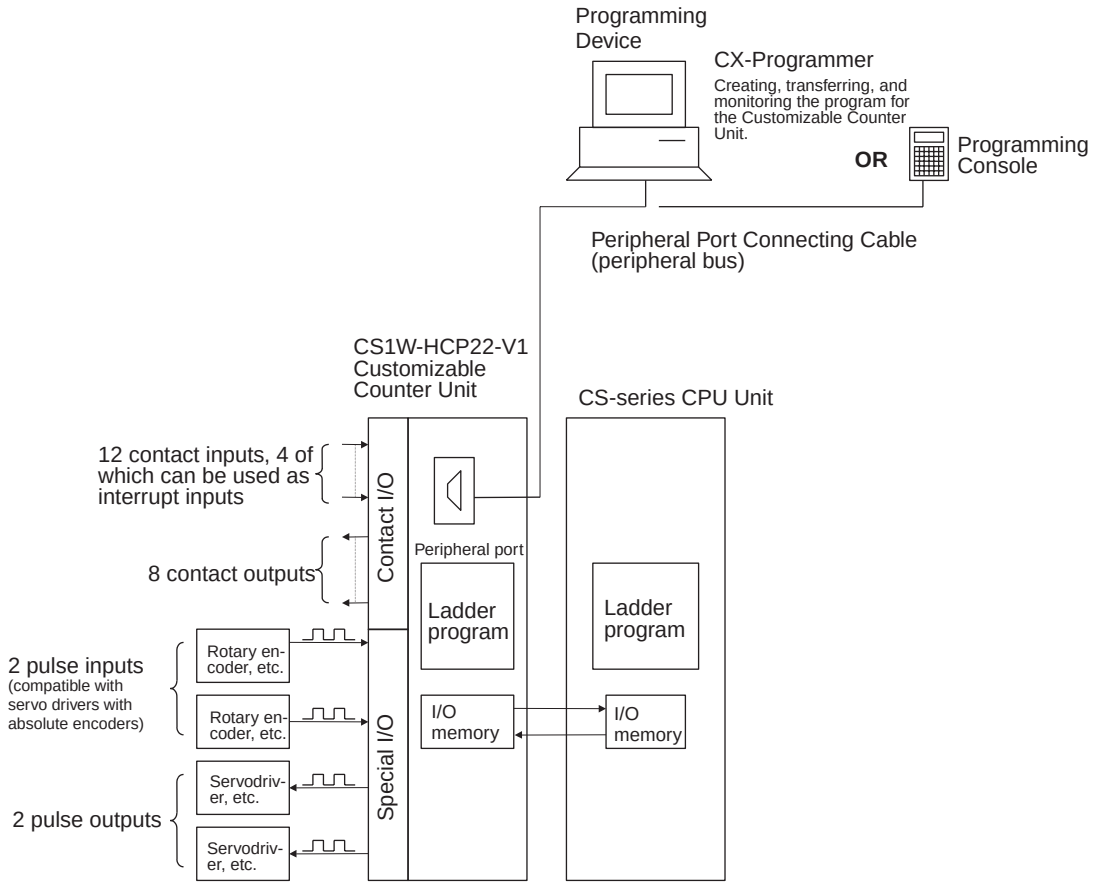

CS1W-HCA22-V1 (Pulse Inputs and Analog Outputs)

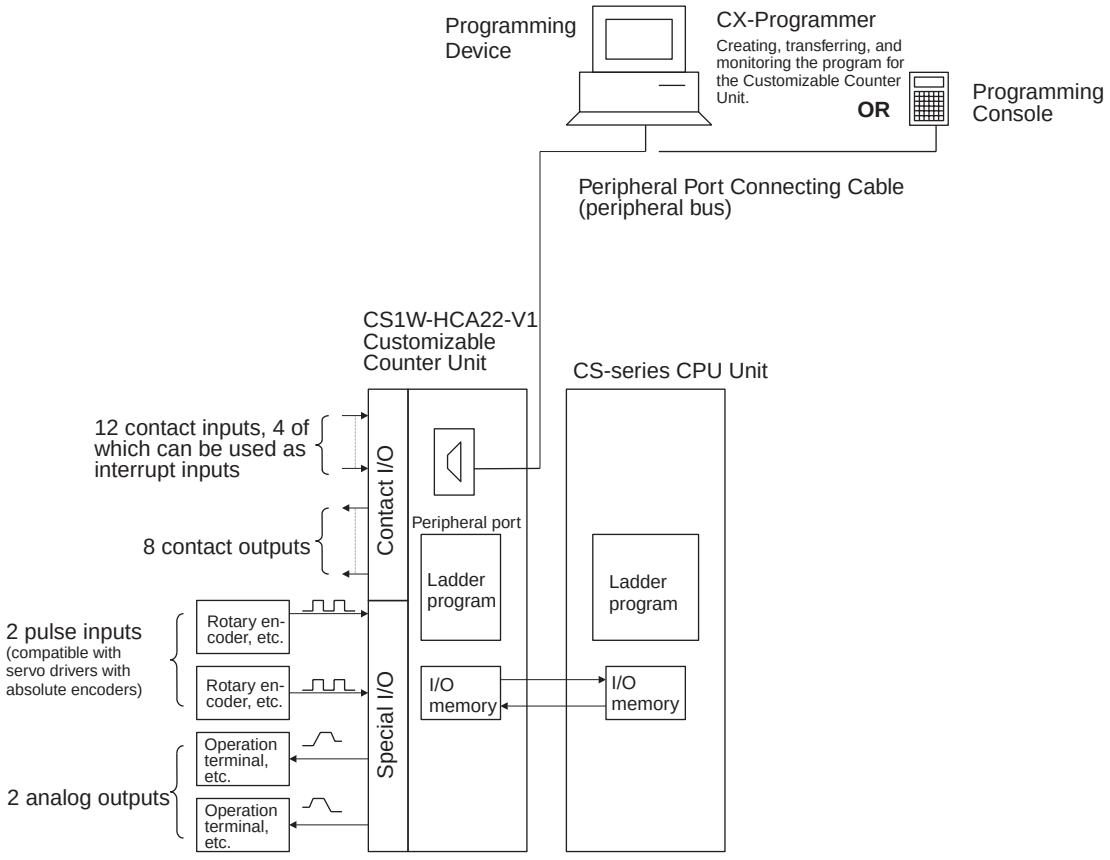

CS1W-HCA12-V1 (Analog Inputs, Pulse Input and Analog Outputs)

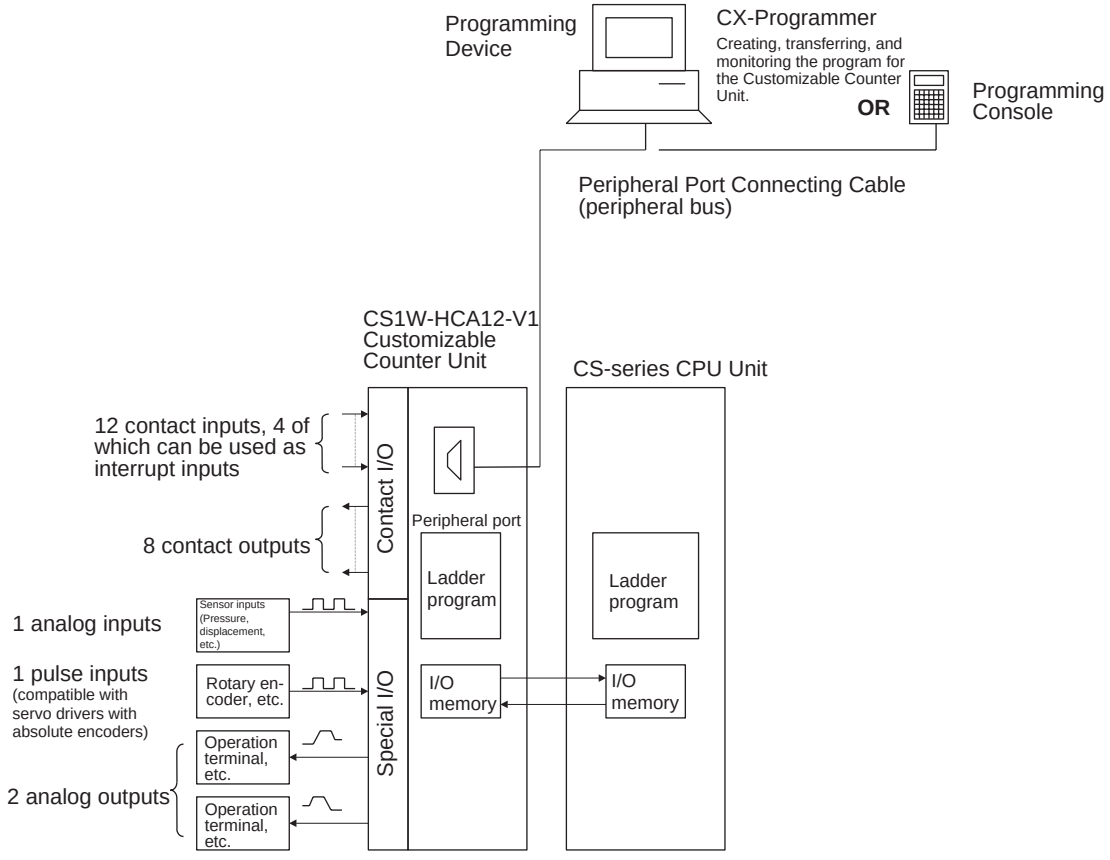

Programming Devices

The CX-Programmer versions that can be used with the Customizable Counter Unit are given in the following table.

Name	Model number	Computer	Serial communications mode	Model setting on the CX-Programmer
CX-Programmer Ver. 1.2 or later (on CD-ROM)	WS02-CXPC1-E	IBM PC/AT or compatible OS: Microsoft Windows 95 or 98	Peripheral bus	CQM1H-CPU61

Note There are some functional limitations in using the CX-Programmer with the Customizable Counter Unit. Refer to *3-4 Programming Devices* for details.

The Programming Consoles that can be used with the Customizable Counter Unit are given in the following table.

Model number	Cable
C200H-PRO27	CS1W-CN224 or CS1W-CN624 required separately.
CQM1-PRO01	2-m cable provided with Programming Console, but CS1W-N114 required separately.
CQM1H-PRO01	2-m cable provided with Programming Console

Connecting Contact and Special I/O

Special connectors are required to connect the contact I/O and special I/O to the connectors on the Customizable Counter Unit. These connectors are provided with the Customizable Counter Unit and can be purchased separately. The cables for these connectors must be provided and wired to the connectors by the user. An OMRON Connector–Terminal Block Conversion Unit can also be used for the special I/O. Refer to *3-3 Wiring* for details.

SECTION 2
Specifications

This section provides performance specifications and I/O specifications for the Customizable Counter Unit.

2-1 Performance Specifications 20
2-1-1 Available Models 20
2-1-2 Specifications 20
2-1-3 Program and Memory 22
2-1-4 Functions 25
2-1-5 I/O Specifications 28
2-2 Contact I/O Specifications (All Units) 33
2-2-1 Contact I/O Specifications 33
2-2-2 I/O Connector Pin Arrangement 34

2-1 Performance Specifications

2-1-1 Available Models

Model number	Program capacity	I/O points (built-in)		Special I/O					Built-in peripheral port
		Contact input	Contact output	Pulse input (high-speed counters)		Pulse outputs	Analog outputs	Analog inputs	
					Compatible with servo driver with absolute encoder (See note)				
CS1W-HIO01-V1	4 Kwords	12 inputs (24 VDC) (4 inputs can be used as interrupt inputs)	8 transistor outputs (sinking)	None	No	None	None	None	For Programming Console or CX-Programmer
CS1W-HCP22-V1				2 pts	Yes	2 pts	None	None	
CS1W-HCA22-V1				2 pts	Yes	None	2 pts	None	
CS1W-HCA12-V1				1 pts	Yes	None	2 pts	1 pts	

Note Supported only by lot numbers of 0209__ or higher.

2-1-2 Specifications

Item			Specification
Model number			CS1W-HIO01-V1/CS1W-HCP22-V1/CS1W-HCA22-V1/CS1W-HCA12-V1
Unit classification			CS1 Special I/O Unit
Applicable PLCs			CS-series PLCs
Applicable unit numbers			00 to 95 (Must not be duplicated with other Special I/O Units)
Applicable Rack/slot			CS-series CPU Rack or Expansion Rack **Note** 1. There are no restrictions on the mounting slot. 2. Mounting to C200H Expansion Racks or SYSMAC BUS Slave Racks is not possible.
Exchange of specific data with CPU Unit	Special I/O Unit Area (CIO n to n+9; n = 2000 + (unit number × 10))		10 words per Unit (data exchanged constantly) 5 words: CPU Unit → Customizable Counter Unit (RUN/STOP commands, general-purpose output data) 5 words: Customizable Counter Unit → CPU Unit (Unit status, general-purpose input data)
	DM Area words allocated to Special I/O Units (m to m+99; m = D20000 + (unit number × 99))		100 words per Unit
		Initial settings from the CPU Unit	10 words: System Setup Area (transferred from the CPU Unit to the Customizable Counter Unit at startup or Unit restart). The System Setup Area contains the following settings: Enable/disable of RUN/STOP command from the CPU Unit; startup operating mode; specification of beginning word addresses for the output and input areas for data exchange with the CPU Unit; number of exchange words; the area used as the data exchange area in the Customizable Counter Unit; address specifications, etc.
		Area for exchanging general-purpose data with the CPU Unit	90 words: For exchanging the general-purpose data listed below.

Item		Specification
Exchange of general-purpose data with CPU Unit	Continuous data exchange between words in the SR Area in the Customizable Counter Unit and CIO Area allocated words in the CPU Unit	4 input words and 4 output words (Inputs are to Customizable Counter Unit) I/O refresh is performed between words in the Customizable Counter Unit's SR Area (SR 231 to SR 234 and SR 236 to SR 239) and words allocated in the CPU Unit's CIO Area.
	Continuous data exchange between user-set words in the Customizable Counter Unit and words allocated in the CPU Unit's DM Area	90 words max. I/O refresh is performed for up to 90 words between user-set words in the Customizable Counter Unit and words allocated in the CPU Unit's DM Area. **Note** Both inputs and outputs can be set in Customizable Counter Unit's DM, AR, IR, LR, and EM Areas.
	Continuous data exchange between LR Area words in the Customizable Counter Unit and user-set words in the CPU Unit	32 words max. I/O refresh is performed for up to 32 words between the Customizable Counter Unit's LR Area (in the order inputs → outputs) and user-set words in the CPU Unit. **Note** Both inputs and outputs can be set in CPU Unit's CIO, WR, AR, HR, DM, and EM Areas.
Methods for making Customizable Counter Unit's initial settings		1. Using the initial settings in the first 10 words (m to m+9) of the words allocated in the CPU Unit's DM Area 2. Using the Unit Setup Area (DM 6600 to DM 6655) of the Customizable Counter Unit
Mounting method		Rack mounting
Setting switches		Rotary switches on front panel: Unit number (0 to 95) Toggle switch: Programming Device connection switch (enables/disables servicing for the Programming Device connected to the peripheral port)
Display		25 LED indicators The Unit is equipped with the following indicators: RUN (Unit operation), OPN (Unit program running), ERC (Unit error), ERH (CPU Unit error), COMM (peripheral communications), In0 to In11 (for inputs), and Out0 to Out7 (for outputs).
Front panel connections	All models (CS1W-HIO01-V1/HCP22-V1/HCA22-V1/HCA12-V1)	• One peripheral port (for Programming Device) • One I/O connector (Compatible connector: FCN-361J024-AU (socket) and FCN-360C024-J2 (connector cover) made by Fujitsu)
	CS1W-HCP22-V1/HCA22-V1/HCA12-V1 only	In addition to the above, one special I/O connector (Compatible connector: FCN-361J040-AU (socket) and FCN-360C040-J2 (connector cover) made by Fujitsu)
Super-capacitor backup data (in RAM)		DM Area (DM 0000 to DM 6143), EM Area (EM 0000 to EM 2047) (See note 1.), Error Log Area (DM 6144 to DM 6199), counter present values **Note** 1. It is possible to set whether EM Area data is held or not (with the default setting, data is cleared). 2. If the power supply to the PLC is left OFF for longer than the super-capacitor's backup (saving) time, the above data will be lost. Therefore, before turning OFF the CPU Unit's power supply for an extended period of time, save the data using the ladder program. (Data memory can be saved to flash memory.)
Flash memory data		User program, general-purpose read-only portion of DM Area (DM 6200 to DM 6599), Unit Setup Area (DM 6600 to DM 6655), expansion instruction information (Also DM 0000 to DM 6143)
Super-capacitor backup time		10 days at 25°C
Self-diagnosis function		CPU errors (WDT), memory errors, FALS system errors (FALS instruction execution or maximum cycle time exceeded), FAL system errors (FAL instruction execution, Unit Setup Area errors, etc.), cycle time exceeded 10 ms, communications port errors, etc.

Item	Specification
Effect on CPU Unit's cycle time	• When data exchange is performed using the words allocated in the CIO Area only: 0.2 ms • When data exchange is performed using words allocated in the DM Area or the LR Area: 0.5 ms
Internal current consumption	CS1W-HIO01-V1: 600 mA at 5 VDC CS1W-HCP22-V1: 800 mA at 5 VDC CS1W-HCA22-V1: 750 mA at 5 VDC, 150 mA at 26 VDC CS1W-HCA12-V1: 750 mA at 5 VDC, 150 mA at 26 VDC
Dimensions	34.5 × 130 × 100.5 mm (W × H × D)
Weight	CS1W-HIO01-V1: 250 g max. CS1W-HCP22-V1/HCA22-V1/HCA12-V1: 350 g max.
Standard accessories	CS1W-HIO01-V1 One OMRON C500-CE241 Connector Set for connecting to I/O connector (soldered type; socket: FCN-361J024-AU made by Fujitsu; connector cover: FCN-360C024-J2 made by Fujitsu) CS1W-HCP22-V1/HCA22-V1/HCA12-V1 In addition to the above, one C500-CE404 Connector Set (made by OMRON) for connecting to special I/O connector (soldered type; socket: FCN-361J040-AU made by Fujitsu; connector cover: FCN-360C040-J2 made by Fujitsu)

2-1-3 Program and Memory

Item		Specifications
Control method		Stored program
I/O control method		Cyclic scan and immediate processing are both possible.
Customizable Counter Unit operating modes		RUN mode, MONITOR mode, PROGRAM mode
RUN/STOP specification method for Customizable Counter Unit's program		Select between the following: 1. RUN/STOP commands from the CPU Unit's allocated memory 2. Operating mode command at startup, or command from the Programming Device after startup
Status output to CPU Unit		Unit's operating mode (RUN/STOP), fatal errors, CYCLE TIME OVER errors, Unit error codes, etc.
Compatible Programming Devices		Programming Console (C200H-PRO27 or CQM1H-PRO01) or CX-Programmer Ver. 1.2 or later (Specify CQM1H as the PLC type. There are restrictions, such as the program capacity.)
Programming language		Ladder diagram
Execution modes		Possible to switch between Normal Execution Mode and High-speed Execution Mode. • Normal Execution Mode: 0.4 μs for LD instruction • High-speed Execution Mode: 0.2 μs for LD instruction
Program capacity		4 Kwords (Normal Execution Mode) **Note** In High-speed Execution Mode, the capacity for which execution (compiling) is possible is restricted. Also, whether or not programs can be executed depends on the contents of the program. The average program capacity in High-speed Execution Mode is approx. 1 Kword.
Instruction length		1 to 4 words per instruction
Number of instructions		113 (14 basic instructions and 99 special instructions)
Instruction execution time	Basic instructions	Normal Execution Mode: 0.4 μs (LD instruction) High-speed Execution Mode: 0.2 μs (LD instruction)
	Special instructions	Normal Execution Mode: 4.8 μs (MOV instruction) High-speed Execution Mode: 4.4 μs (MOV instruction)

Item	Specifications
Common processing (overhead)	CS1W-HIO01-V1: 0.08 ms max. CS1W-HCP22-V1/HCA22-V1/HCA12-V1: 0.1 ms max. The above figures are for operation under the following conditions: 1. Data exchange with the CPU Unit is performed using the allocated words in the CIO Area only. 2. The Programming Device connection switch is set to OFF. 3. With the HCP22-V1/HCA22-V1/HCA12-V1, Measurement Mode is not being used. 4. With the HCA22-V1, analog output is disabled. 5. With the HCA12-V1, analog input is refreshed immediately, and analog output is disabled.
I/O allocations	None (The Unit's built-in I/O points are used for the Input and Output Areas given below.)

Item		Specifications
I/O memory	Input Area	12 bits: IR 000 (IR 00000 to IR 00011) The Unit's built-in input points are allocated to these bits (fixed allocations). **Note** IR 00000 to IR 00003 can be used either as normal input bits or for interrupt inputs (in Input Interrupt Mode or Counter Mode).
	Output Area	8 bits: IR 001 (IR 00100 to IR 00107) The Unit's built-in output points are allocated to these bits (fixed allocations).
	Work Area	1,088 bits (68 words): IR 002 to IR 049 (IR 00200 to IR 04915), IR 200 to IR 219 (IR 20000 to IR 21915) These bits have no specific functions and can only be used in the program.
	SR Area	568 bits (36 words): SR 220 to SR 255 (SR 22000 to SR 25507) These bits have specific functions. **Note** SR 230 to SR 234 and words SR 235 to SR 239 are used for exchanging general-purpose data with the CPU Unit.
	AR Area	448 bits (28 words): AR 00 to AR 27 (AR 0000 to AR 2715) These bits have specific functions.
	TR Area	8 bits: TR 0 to TR 7 These bits temporarily store the ON/OFF status of an instruction block for branching.
	LR Area	512 bits (32 words): LR 00 to LR 31 These bits are for exchanging general-purpose data with the CPU Unit. (Data can be exchanged cyclically with user-set words in the CPU Unit. Up to 32 words of data can be input or output. The word allocation are specified in the Unit Setup Area.)
	Timer/Counter Area	256 points: TIM/CNT 000 to TIM/CNT 255 (The same numbers are used for timers and counters.) When using the CNT and CNTR instructions, at power interruption or when the mode is switched, present counter values are held (with super-capacitor backup) at the values immediately before power was interrupted or the mode was switched. When other instructions are used, the data in the TIM/CNT Area is cleared.
	DM Area (general-purpose read/write area)	6,144 words: DM 0000 to DM 6143 Data in this area can be read or written in word (16-bit) units. It is held (with super-capacitor backup) at power interruptions or when the mode is switched. Writing can be performed with instructions or from the Programming Device. **Note** By turning ON bit SR 25200, it is possible to save all the data in the range DM 0000 to DM 6143 to flash memory. The data is read using the XFER instruction.
	EM Area	2,048 words: EM 0000 to EM 2047 Data in this area can be read or written in word (16-bit) units. It is possible to specify whether the data is held (with super-capacitor backup) at power interruptions or when the mode is switched. Writing can be performed with instructions or from the Programming Device.

Item			Specifications
Other memory areas	Read-only portion of DM Area	Error Log Area	56 words: DM 6144 to DM 6199 Data in this area is held (with super-capacitor backup) at power interruptions or when the mode is switched.
		General-purpose read-only area	400 words: DM 6200 to DM 6599 Data in this area is held (in flash memory) at power interruptions or when the mode is switched. Writing to this area is not possible using instructions; it is only possible from the Programming Device. (Reading is possible with either method.) Data in this area is protected from being changed by the ladder program.
		Unit Setup Area	56 words: DM 6600 to DM 6655 This area is for making the initial settings for the functions of the Customizable Counter Unit at a software level. Data in this area is held (in flash memory) at power interruptions or when the mode is switched. Writing to this area is not possible using instructions; it is only possible from the Programming Device. (Reading is possible with either method.) Data in this area is protected from being changed by the ladder program.
Trace memory			None

2-1-4 Functions

Item				Specifications	
Types of interrupts	Input interrupts (4 points max.)	Input Interrupt Mode		Interrupt is executed in response to input to the Unit's built-in input points (input bits 00000 to 00003). Interrupts can be executed when the corresponding input turns ON, OFF, or both. The response time between the input conditions being satisfied and execution of the interrupt program is 0.08 ms (for execution at ON).	**Note 1:** Specify the mode as either Input Interrupt Mode or Counter Mode using the INT instruction. **Note 2:** Specify ON, OFF, or both in the Unit Setup Area.
		Counter Mode		Interrupt is executed after input is received via the Unit's built-in input points a certain number of times. The number of times is counted decrementally when the corresponding input turns ON, OFF, or both.	
	Interval timer interrupt (1 point)	Scheduled Interrupt Mode		Program is interrupted at regular intervals measured by one of the Unit's internal timers.	
		One-shot Interrupt Mode		Program is interrupted once after a certain time measured by one of the Unit's internal timers.	
	CS1W-HCP22-V1 (pulse I/O)	Pulse inputs (high-speed counter)	Target value interrupts	Interrupt is executed when the high-speed counter PV is equal to a target value set with the CTBL instruction.	
		Pulse outputs	Target value interrupts	Interrupt is executed when the pulse output PV is equal to a target value set with the CTBL instruction.	
	CS1W-HCA22-V1/HCA12-V1 (pulse inputs and analog outputs)	Pulse inputs (high-speed counter)	Target value interrupts	Interrupt is executed when the high-speed counter PV is equal to a target value set with the CTBL instruction.	

Item				Specifications
Bit pattern output for comparison	CS1W-HCP22-V1 (pulse I/O)	Pulse input (high-speed counter)	Range comparison bit pattern output	A specified bit pattern is output when the high-speed counter PV lies within a range specified with the CTBL instruction.
		Pulse output	Range comparison bit pattern output	A specified bit pattern is output when the pulse output PV or the pulse counter PV (measurement time) lies within a range specified with the CTBL instruction.
	CS1W-HCA22-V1/HCA12-V1 (pulse inputs and analog outputs)	Pulse input (high-speed counter)	Range comparison bit pattern output	A specified bit pattern is output when the high-speed counter PV lies within a range specified with the CTBL instruction.
Functions	Execution of CPU Unit's external interrupt tasks			The CPU Unit's external interrupt tasks (task numbers 0 to 99) can be executed from the Unit using the MCRO instruction in the Unit's program.
	Constant cycle time			A constant cycle time can be set in the range 0.1 to 50 ms (in 0.1-ms units). Using this function, even if all the necessary processing is completed in less than the set time, the next cycle will not start until the constant cycle time setting has elapsed. (If the constant cycle time is exceeded, the Constant Cycle Time Exceeded Flag turns ON.)
	Cycle time monitoring			If the cycle time exceeds 10 ms, the Cycle Time Over Flag (SR 23509) turns ON, and operation continues. (This function can be turned OFF in the Unit Setup Area.) When the cycle time exceeds the cycle monitor time, operation stops. The cycle monitor time can be set in the range 1 to 100 ms in 1-ms units (default setting: 50 ms). **Note** The cycle time's maximum value and present value are stored in the AR Area.
	I/O refreshing			Cyclic refreshing, immediate refreshing by IORF CS1W-HCA22-V1/HCA12-V1 only: Immediate refreshing of analog output values **Note** It is not possible to set immediate refreshing for each instruction.
	I/O memory holding when changing operating modes			Not possible.
	Mode setting at power-ON			Possible (Specified in the allocated words of the DM Area.)
	MCRO instruction			Calling of subroutines and passing arguments and executing CPU Unit's external interrupt tasks
	Debugging			Differential monitoring
	Online editing			User programs can be overwritten in program-block units when the CPU Unit is in MONITOR mode. With the CX-Programmer, more than one program-block can be edited at the same time. **Note** During overwriting using online editing, the Unit cannot perform operations and the program will be interrupted for 1,200 ms max.
	User memory (UM) protection	Program protection		In the Unit Setup Area, it is possible to prohibit writing to the user program, the general-purpose read-only portion of DM Area, the Unit Setup Area, and expansion instruction information from the Programming Device.

Item			Specifications	
Functions (continued)	Self-diagnosis		User-defined self-diagnosis are possible (fatal errors and non-fatal errors can be defined using user instructions (FALS/FAL instructions)). **Note** Operation can also be stopped automatically using user-defined fatal error instructions. User-defined logging in specific bits is also possible using user-defined non-fatal error instructions.	
	Error log		Up to 11 errors (including user-defined errors) can be recorded in the Error Log Area (DM 6145 to DM 6199). The information recorded includes the error code, the error details, and the time the error occurred. Special I/O Unit error codes are stored in the Error Log Area. Unit error codes (SR 23500 to SR 23507) are stored in bits 00 to 07 of the error details in the Error Log Area.	
	Serial communications port		One built-in peripheral port: Used for connecting Programming Device (peripheral bus, Programming Console)	
	Serial communications modes		Application	Built-in peripheral port
		Programming Console bus	Used for communications with Programming Console	Yes
		Peripheral bus	Used for communications with Programming Devices such as CX-Programmer	Yes
	Clock		None **Note** The time of error occurrence that is recorded in the error log will depend on the time in the CPU Unit. If it is not possible to access the time in the CPU Unit, 0 will be recorded.	
	Output OFF function		None **Note** The outputs from the Unit can be turned OFF from the program when the outputs in the CPU Unit are turned OFF. This operation must be programmed by the user. Refer to *4-1 Overview* for details.	
	Forced set/reset		Available (When switching between PROGRAM mode and RUN or MONITOR mode or when the power is turned ON, the forced set/reset status is cleared.) **Note** There is a part of the AR Area where forced set/reset is possible. For details on the AR Area, refer to *6-4 AR Area*.	
	Memory protection at power interruption		Held areas: DM Area (general-purpose read/write area), EM Area, and present counter values **Note** It is possible to specify whether the EM Area is held or not in the Unit Setup Area.	
	Program check		Program checks are always performed at the beginning of operation for items such as no END instruction and instruction errors. It is also possible to check programs from the CX-Programmer. (The check level can also be set.)	
	Analog inputs (CS1W-HCA12-V1 only)		High-speed input (with 50 μs of A/D conversion) of analog data is possible. This makes the unit compatible with applications that require high-speed processing such as displacement sensor input.	
	Compatible with servo driver with absolute encoder (CS1W-HCP22-V1/HCA22-V1/HCA12-V1 only)		Data (the number of turns) of servo driver (W series by OMRON, etc.) with ABS encoder (multi-turn absolute encoder) can be input (to phase A). **Note** Supported only by lot numbers of 0209__ or higher.	

Item		Specifications
Functions (continued)	Ladder library (-V1 only)	It is possible to encapsulate the entire program or the part of subroutine programs, and to save it to the Flash memory in the unit as the ladder library. The saved library can be executed by the following methods: • Call the library to execute at starting operations (Boot mode) • Call it to execute with MCRO instruction (MCRO mode)
	Back-up function (-V1 only)	It is possible to back up and restore the contents of the unit back-up memory (user program, unit setup area, ladder library, etc.) to the memory card as the unit back-up file thru the simplified back-up operation on CPU unit's front panel or the bit operation on this unit.
	Constant cycle time refresh (-V1 only)	At the occurrence of CONSTANT CYCLE TIME OVER error with the use of the constant cycle time function, the error can be cleared by the bit operation on the ladder program and the cycle time can be put back to constant continuously again.

2-1-5 I/O Specifications

■ All Units: CS1W-HIO01-V1, CS1W-HCP22-V1, CS1W-HCA22-V1 and CS1W-HCA12-V1

Contact Inputs

Item	Contents
Number of inputs	12 inputs (bits IR 00000 to IR 00011) Details: • 4 interrupt inputs in Input Interrupt Mode or Counter Mode. Can also be used as normal inputs (bits IR 00000 to IR 00003) • 8 normal inputs (bits IR 00004 to IR 00011) **Note** It is possible to specify ON, OFF, or both for the timing of interrupts in Input Interrupt Mode.
Input signal type	24-VDC

Contact Outputs

Item	Contents
Number of outputs	8 outputs (bits IR 00100 to IR 00107)
Output signal type	Transistor NPN outputs

■ CS1W-HCP22-V1 (Pulse I/O)

Pulse Inputs (High-speed Counters)

Item	Contents
Number of counters	2
Counting mode	• Linear Mode • Ring Mode Modes compatible with absolute encoders (Supported only by lot numbers of 0209__ or higher) • ABS linear (CW–) counter • ABS linear (CW+) counter • ABS ring mode counter (Set in Unit Setup Area (DM 6605).)
Signals	A and B and pulse input Z
Input method	Differential-phase; x1 Differential-phase; x2 Differential-phase; x4 Increment/decrement Pulse + direction
Compatible encoders	• Incremental encoders • Absolute encoders (on servo drivers) (When not using the functions compatible with servo drivers with absolute encoders, using this unit as a normal counter enables the incremental encoder input.)
Input voltage	5 VDC, 12 VDC, 24 VDC, RS-422A line driver (AM26LS31)
Output compatible with absolute encoder (SEN signal)	When SEN signal is output to servo driver, servo driver will transmit the number of encoder's rotations to this unit. After that, it transmits pulse train corresponding to displacement of the turns to the unit (transmit the same pulse as incremental encoders). (OMNUC W series servo driver by OMRON, etc.) • 5 V PNP output
Counter frequency	50 kHz (default) or 200 kHz
Control method	Target value comparison Range comparison
Measurement mode	High-speed counter rate of change for port 1 or 2 High-speed frequency for port 1
Applicable Instructions	CTBL, INI, PRV(62) PV can be compared, changed, and read with CTBL, INI, or PRV.

Pulse Outputs

Item		Contents
Number of outputs		2 outputs
Output type	Single-phase pulse output	The single-phase pulse outputs can be used for positioning or speed control at a fixed duty ratio (duty ratio: 50%). Output frequencies: 6 Hz to 200 kHz
	One-shot pulse outputs	Output can be set to turn ON for a time specified by the user. (Set in range 0.01 to 9,999 ms in 0.01-ms units.)
	Pulse output counter time (time measurement)	High-precision timer measurement in 0.01-ms units is possible using one-shot pulse output. (In this case, external pulse output is not possible.)

■ CS1W-HCA22-V1 (Pulse Inputs and Analog Outputs)

Pulse Inputs (High-speed Counters)

same as CS1W-HCP22-V1

Analog Outputs

Item	Contents
Number of outputs	2 outputs
Output signal ranges	Each output can be set to any one of the following: 1 to 5 V, 0 to 5 V, 0 to 10 V, or –10 to 10 V
Accuracy	±0.3%
Resolution	–10 to 10 V: 1/10,000 0 to 10 V, 0 to 5 V, or 1 to 5 V: 1/4,000
D/A conversion time	0.05 ms max.
Output function validity	Each analog output can be set whether output is valid or invalid.
Output hold mode	Analog output values can be held. (Analog values can be output at their peak, held, or cleared values when the Conversion Enable Flag is OFF, a fatal error occurs, or an analog output error occurs.)
Analog output refresh method	Refreshing of analog outputs is set to one of the following: END refresh Immediate refresh via instructions
Offset/gain adjustment	The offset or gain can be specified and changed.
Applicable Instructions	Analog output can be controlled directly with SPED and ACC.

■ CS1W-HCA12-V1 (Pulse Inputs, Analog Inputs and Analog Outputs)

Pulse Inputs (Compatible with Servo Drivers with Absolute Encoders)

Item	Contents
Number of counters	1
Counting mode	• Linear Mode • Ring Mode Modes compatible with absolute encoders(Supported only by lot numbers of 0209__ or higher) • ABS linear (CW–) counter • ABS linear (CW+) counter • ABS ring mode counter (Set in Unit Setup Area (DM 6605).)
Signals	A and B and pulse input Z
Input method	Differential-phase; x1 Differential-phase; x2 Differential-phase; x4 Increment/decrement Pulse + direction
Compatible encoders	• Incremental encoders • Absolute encoders (on servo drivers) (When not using the functions compatible with servo drivers with absolute encoders, using this unit as a normal counter enables the incremental encoder input.)
Input voltage	5 VDC, 12 VDC, 24 VDC, RS-422A line driver (AM26LS31)
Output compatible with absolute encoder (SEN signal)	When SEN signal is output to servo driver, servo driver will transmit the number of encoder's rotations to this unit. After that, it transmits pulse train corresponding to displacement of the turns to the unit (transmit the same pulse as incremental encoders). (OMNUC W series servo driver by OMRON, etc.) • 5 V PNP output
Counter frequency	50 kHz (default) or 200 kHz
Control method	Target value comparison Range comparison
Measurement mode	High-speed counter rate of change High-speed frequency
Applicable Instructions	CTBL, INI, PRV(62) PV can be compared, changed, and read with CTBL, INI, or PRV.

Analog Input

Item	Contents
Number of inputs	1
Input signal range	One of the following ranges can be selected for each input: –10 to +10 V, 0 to 10 V, 1 to 5 V/4 to 20 mA, or 0 to 5 V.
Resolution	Varies depending on the range –10 to +10 V: 1/16,000 (14 bits) 0 to 10 V: 1/8,000 (13 bits) 0 to 5 V: 1/4,000 (12 bits) 1 to 5 V: 1/4,000 (12 bits) 4 to 20 mA: 1/4,000 (12 bits)

Item	Contents
Accuracy	• Voltage input ±0.2% (23±2°C) ±0.4% (0 to 55°C) • Current input ±0.4% (23±2°C) ±0.6% (0 to 55°C)
A/D conversion time	0.05 ms max.
Input response time	1.5 ms or less (See *Specification of Analog Input Functions* on page 155 for details.)
Output hold mode	Analog output values can be held. (Analog values can be output at their peak, held, or cleared values when the Conversion Enable Flag is OFF, a fatal error occurs, or an analog output error occurs.)
Analog input refresh method	Refreshing of analog outputs is set to one of the following: END refresh Immediate refresh via instructions
Offset/gain adjustment	The offset or gain can be specified and changed.
Applicable Instructions	Analog input value can be read directly with PRV.

Analog Outputs

Item	Contents
Number of outputs	2 outputs
Output signal ranges	Each output can be set to any one of the following: 1 to 5 V, 0 to 5 V, 0 to 10 V, or –10 to 10 V
Accuracy	±0.3%
Resolution	–10 to 10 V: 1/10,000 0 to 10 V, 0 to 5 V, or 1 to 5 V: 1/4,000
D/A conversion time	0.05 ms max.
Output function validity	Each analog output can be set whether output is valid or invalid.
Output hold mode	Analog output values can be held. (Analog values can be output at their peak, held, or cleared values when the Conversion Enable Flag is OFF, a fatal error occurs, or an analog output error occurs.)
Analog output refresh method	Refreshing of analog outputs is set to one of the following: END refresh Immediate refresh via instructions
Offset/gain adjustment	The offset or gain can be specified and changed.
Applicable Instructions	Analog output can be controlled directly with SPED and ACC.

2-2 Contact I/O Specifications (All Units)

2-2-1 Contact I/O Specifications

Item		Specifications
Contact inputs	Number of inputs	12 inputs • 4 inputs (input bits IR 00000 to IR 00003) can be used either as interrupt inputs or normal inputs. **Note** Each of these 4 inputs can be set to be used as either interrupt inputs or normal inputs in the Unit Setup Area (DM 6620). It is also possible to specify the ON, OFF, or both for the interrupt timing for each point (Input Interrupt Mode or Counter Mode) in the Unit Setup Area (DM 6620). • 8 inputs (input bits IR 00004 to IR 00011) can be used as normal inputs only.
	Input voltage/current	24 V $^{+10\%}/_{-15\%}$, 5 mA typical
	Min. ON voltage	15.2 V
	Max. OFF voltage	4.8 V
	Input response	Inputs for interrupt input or normal input (4 points with one common): ON delay time: 50 μs OFF delay time: 200 μs max.
		Inputs for normal input (8 points with one common): ON delay time: 100 μs OFF delay time: 1 ms max.
	Circuit configuration	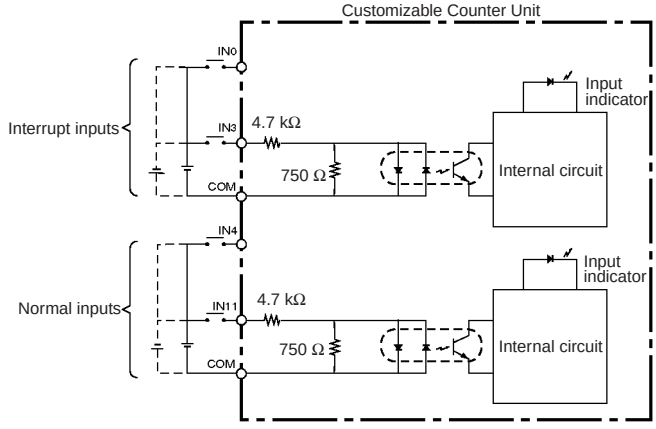

Item		Specifications
Contact outputs	Number of outputs	8 outputs (used as normal outputs only)
	Output type	Sinking (NPN)
	Switching capacity	4.5 to 30 VDC, 0.3 A per output
	Maximum inrush current	3.0 A per point, 10 ms max.
	Leakage current	0.1 mA max.
	Residual voltage	0.4 V max.
	ON delay time	0.1 ms max.
	OFF delay time	1 ms max.
	External power supply	4.5 to 26.4 VDC
	Circuit configuration	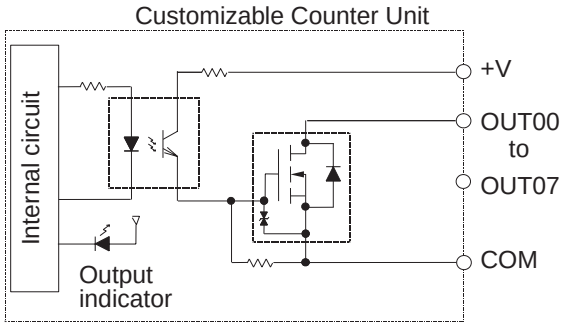

Note Information on input interrupts applies to both Input Interrupt Mode and Counter Mode. Only single-phase inputs are possible for interrupt inputs.

2-2-2 I/O Connector Pin Arrangement

Pin arrangement	Row B	Pin	Row A
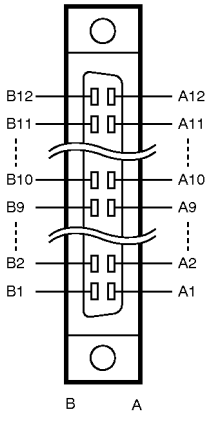	External input 0 (Interrupt input or normal input; bit 00000)	12	External input 2 (Interrupt input or normal input; bit 00002)
	External input 1 (Interrupt input or normal input; bit 00001)	11	External input 3 (Interrupt input or normal input; bit 00003)
	Common for external inputs 0 to 3	10	Common for external inputs 4 to 11
	External input 4 (Normal input; bit 00004)	9	External input 8 (Normal input; bit 00008)
	External input 5 (Normal input; bit 00005)	8	External input 9 (Normal input; bit 00009)
	External input 6 (Normal input; bit 00006)	7	External input 10 (Normal input; bit 00010)
	External input 7 (Normal input; bit 00007)	6	External input 11 (Normal input; bit 00011)
	External output 0 (Normal output; bit 00100)	5	External output 4 (Normal output; bit 00104)
	External output 1 (Normal output; bit 00101)	4	External output 5 (Normal output; bit 00105)
	External output 2 (Normal output; bit 00102)	3	External output 6 (Normal output; bit 00106)
	External output 3 (Normal output; bit 00103)	2	External output 7 (Normal output; bit 00107)
	Common for external outputs 0 to 7	1	Power supply for external outputs 0 to 7

SECTION 3
Nomenclature, Installation, and Wiring

This section provides the names of the different components of the Customizable Counter Unit and explains the procedures required for installing and wiring the Unit.

3-1 Names and Functions of Parts 36
3-1-1 Names and Functions of Parts 36
3-2 Installation 39
3-2-1 Applicable Racks 39
3-2-2 Mounting the Unit (All Units) 40
3-2-3 Handling the Unit 41
3-3 Wiring 42
3-3-1 I/O Connector Pin Arrangement (All Units) 42
3-3-2 Special I/O Connector Pin Arrangement 43
3-3-3 Wiring Examples 45
3-3-4 Wiring Methods 49
3-4 Programming Devices 53
3-4-1 Programming Consoles 55
3-4-2 CX-Programmer 55
3-5 Fail-safe Circuits 56

3-1 Names and Functions of Parts

3-1-1 Names and Functions of Parts

CS1W-HIO01-V1

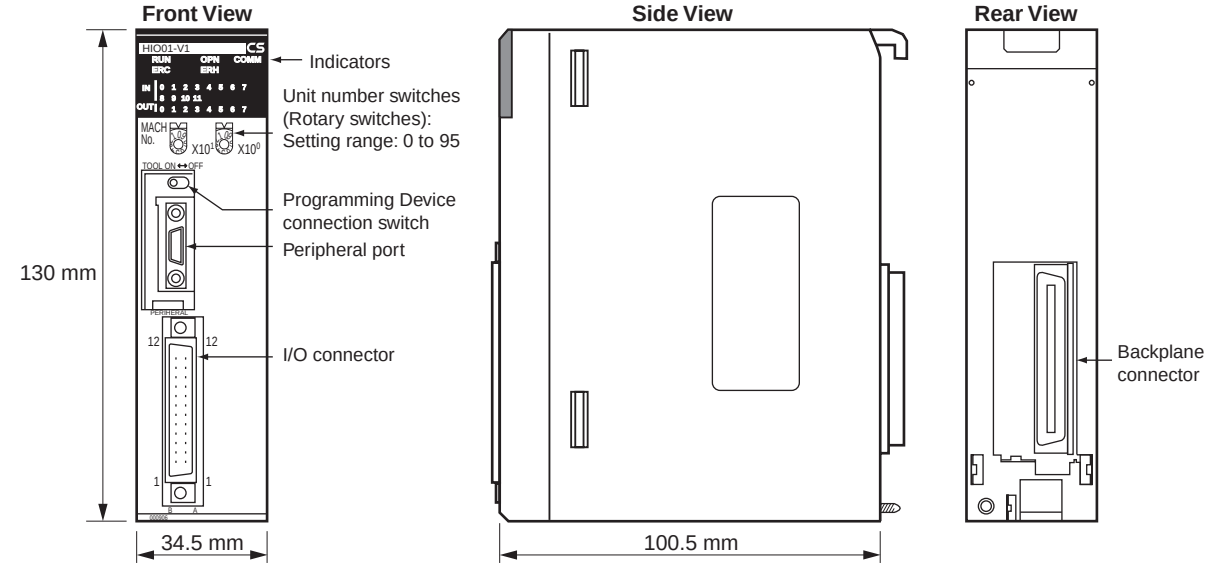

CS1W-HCP22-V1/HCA22-V1

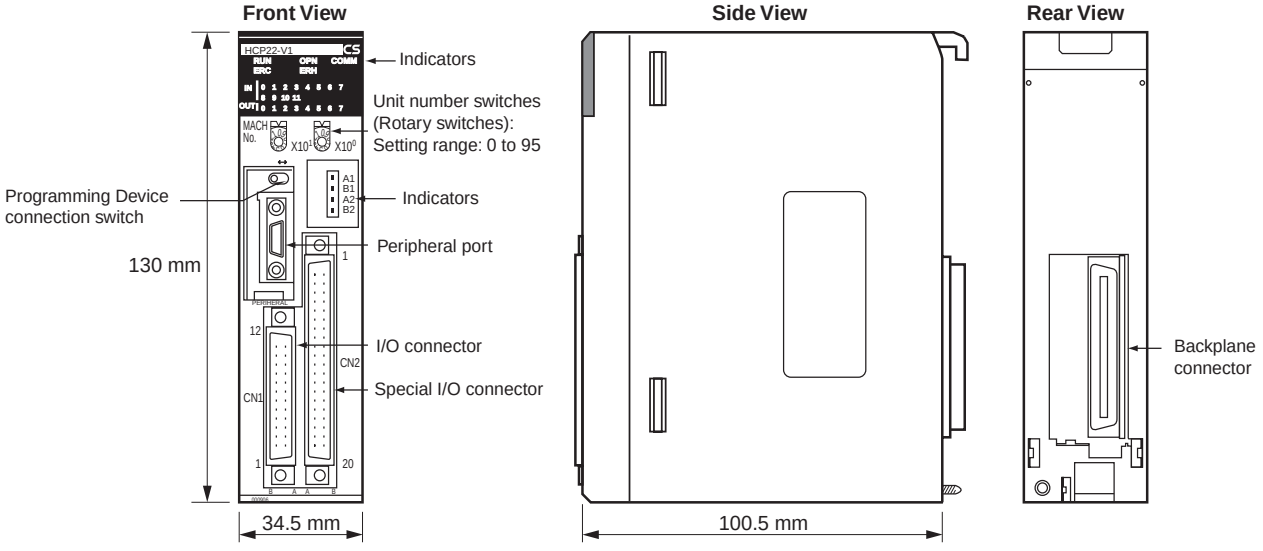

CS1W-HCA12-V1

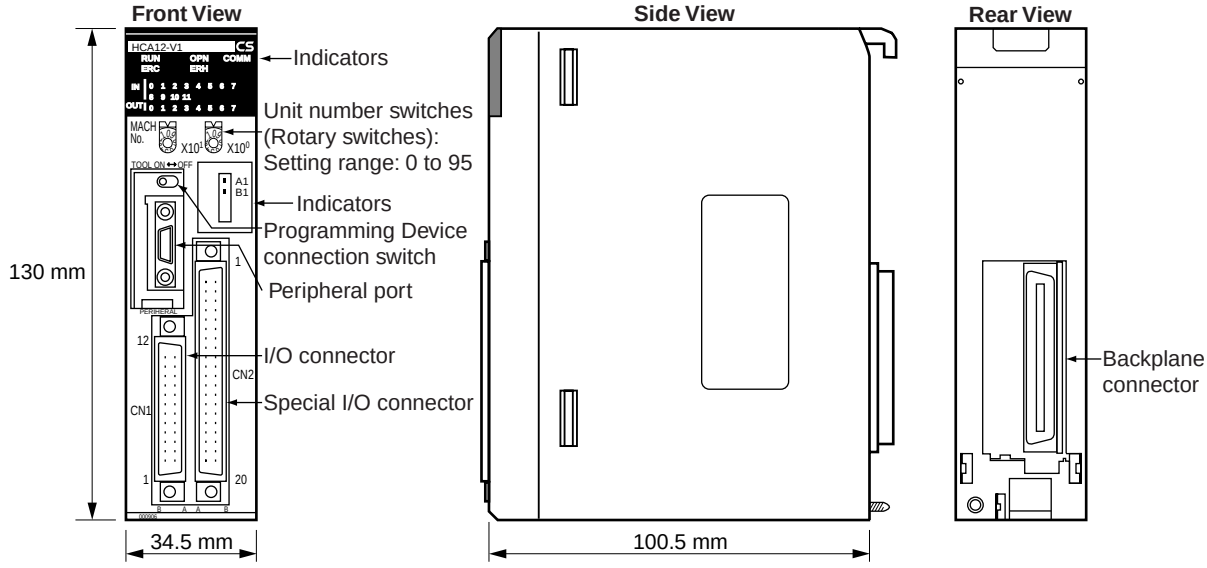

Unit Number Switches (Rotary Switches)

Data is exchanged between the CPU Unit and the Customizable Counter Unit via the Special I/O Unit Area and DM Area words allocated to Special I/O Units. The words in these two areas that are allocated to the Customizable Counter Unit are determined by the setting of the unit number switch on the front of the Unit.

Unit Number Switches

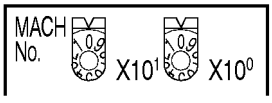

Unit number	Words allocated from Special I/O Unit Area	Words allocated from DM Area
0	CIO 2000 to CIO 2009	D20000 to D20099
1	CIO 2010 to CIO 2019	D20100 to D20199
2	CIO 2020 to CIO 2029	D20200 to D20299
3	CIO 2030 to CIO 2039	D20300 to D20399
4	CIO 2040 to CIO 2049	D20400 to D20499
5	CIO 2050 to CIO 2059	D20500 to D20599
6	CIO 2060 to CIO 2069	D20600 to D20699
7	CIO 2070 to CIO 2079	D20700 to D20799
8	CIO 2080 to CIO 2089	D20800 to D20899
9	CIO 2090 to CIO 2099	D20900 to D20999
10	CIO 2100 to CIO 2109	D21000 to D21099
...	...	...
n	CIO 2000 + (n × 10) to CIO 2000 + (n × 10) + 9	D20000 + (n × 100) to D20000 + (n × 100) + 99
...	...	...
95	CIO 2950 to CIO 2959	D29500 to D29599

Note If the same unit number that is used for another Special I/O Unit is set, a Unit Number Duplication Error (fatal error) will occur in the CPU Unit ("UNIT No. DPL ERROR" displayed at Programming Console), and the PLC will not operate. A40113 in the CPU Unit will turn ON.

Programming Device Connection Switch

Turn ON this switch to enable Programming Device servicing at the peripheral port and turn it OFF to disable it. Operational errors related to the connection of a Programming Device (such as changes in the operating mode) can be prevented by turning OFF this switch.

Programming Device connection switch	Programming Device
Set to ON: TOOL ON OFF	Connection enabled (The switch must be turned ON to use a Programming Device.)
Set to OFF: TOOL ON OFF	Connection disabled (Turn OFF the switch to prevent operational errors.)

Note

1. If the switch is turned OFF, Programming Device servicing is not performed and so the scan time is shorter.
2. This switch can also be used as a restart switch for connection with the Programming Device.

Peripheral Port

The peripheral port is used for connecting to a Programming Device (i.e., a Support Software installed on a computer or a Programming Console).

Note The Unit automatically recognizes the serial communications mode (i.e., Programming Console bus, peripheral bus).

I/O Connector (All Units)

The I/O connector is for contact I/O. Make a cable for this connector with the 24-pin connector provided with the Unit. (For details, refer to *3-3 Wiring*.)

Special I/O Connector (CS1W-HCP22-V1/HCA22-V1/HCA12-V1 Only)

The special I/O connector is for special I/O: Pulse inputs and pulse outputs for the CS1W-HCP22-V1, pulse inputs and analog outputs for the CS1W-HCA22-V1, and pulse inputs, analog input and analog outputs for the CS1W-HCA12-V1. Either make a cable for this connector with the 40-pin connector provided with the Unit, or using a special OMRON cable, connect to an OMRON Connector Terminal Conversion Unit. (For details, refer to *3-3 Wiring*.)

Indicators

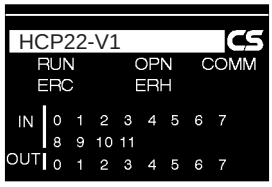

Indicator	Name	Color	Status	Meaning
RUN	Running	Green	Lit	The Unit is operating normally.
			Not lit	One of the following: • The system in the Unit is stopped. • The Unit is performing initialization processing. • There is a hardware error at the Unit. • There is no power supply from the Power Supply Unit. • Unit WDT error. • Unit recognition error (recognized as CPU Bus Unit) • Unit not recognized (The data for this Unit in the registered I/O table does not correspond with the mounted Unit.) • CPU bus error • Unit number error • Unit RAM error
OPN	Program execution	Green	Lit	The Unit's program is being executed.
			Not lit	The Unit's program is stopped.

Indicator	Name	Color	Status	Meaning
ERC	Unit error	Red	Lit	Fatal error at the Unit.
			Flashing	A non-fatal error at the Unit, or an error at the CPU Unit.
			Not lit	No errors at the Unit.
ERH	CPU Unit error	Red	Lit	An error at the CPU Unit (fatal error, WDT error, monitor error, or bus error) or an initial setting error in the CPU Unit's allocated words in the DM Area.
			Not lit	No errors at the CPU Unit.
COMM	Peripheral communications	Yellow	Lit	Communications at the peripheral port.
			Not lit	No communications at the peripheral port.
IN0 to IN11	Input signals	Yellow	Lit	Input signal ON
			Not lit	Input signal OFF
OUT0 to OUT7	Output signals	Yellow	Lit	Output signal ON
			Not lit	Output signal OFF
A (See note)	Phase A input	Yellow	Lit	Phase A input ON
			Not lit	Phase A input OFF
B (See note)	Phase B input	Yellow	Lit	Phase B input ON
			Not lit	Phase B input OFF

Note Supported by CS1W-HCP22-V1/HCA22-V1/HCA12-V1 only.

3-2 Installation

3-2-1 Applicable Racks

The Customizable Counter Unit is a CS-series Special I/O Unit.

- It can be mounted to a CS-series CPU Rack or a CS-series Expansion Rack.
- It cannot be mounted to a C200H Expansion Rack or a SYSMAC BUS Slave Rack.

The number of Units that can be mounted on one Rack (CPU Rack or Expansion Rack) depends on the maximum supply current of the Power Supply Unit and the current consumption of the other Units.

Note The CIO Area words that are allocated to Special I/O Units depends on the setting of the unit number switch on the front of the Unit, not on the slot in which the Unit is mounted.

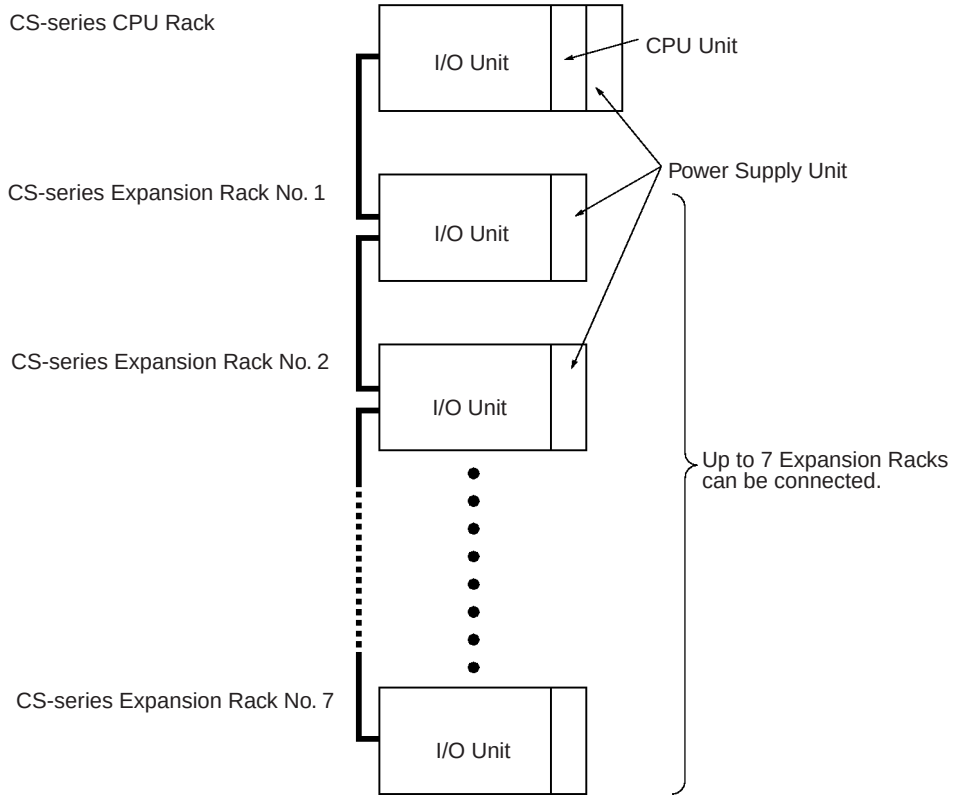

3-2-2 Mounting the Unit (All Units)

Use the following procedure to mount the Customizable Counter Unit to the Backplane.

1,2,3... 1. Hook the top end of the Unit onto the Backplane as shown below.

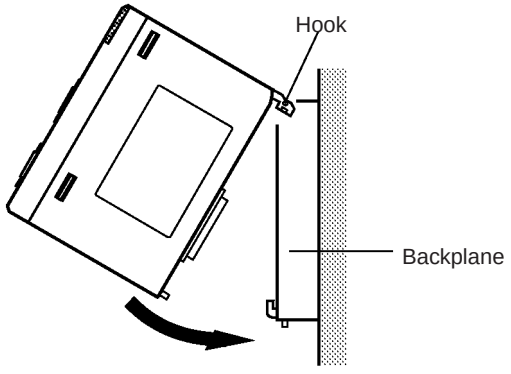

2. Make sure that the connector on the back of the Unit is properly inserted into the connector in the Backplane, and tighten the screw on the bottom of the Unit securely. The tightening torque for the screw is 0.4 N·m.

3. To remove the Unit, loosen the screw at the bottom of the Unit before dismounting.

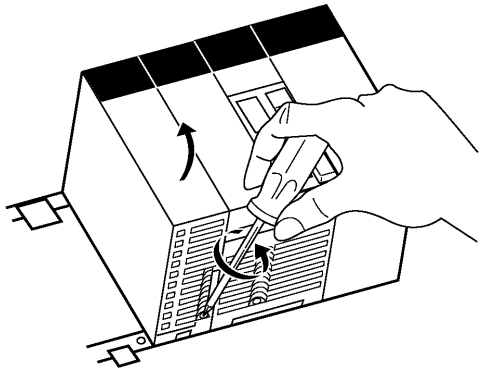

Note Provide the space shown in the diagram below to enable mounting and dismounting.

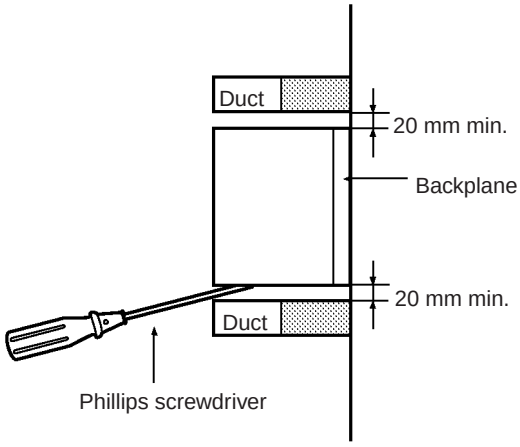

3-2-3 Handling the Unit

- Be sure to turn OFF the power supply to the PLC before mounting or dismounting the Unit, or performing wiring.
- To reduce the influence of noise, do not run I/O signal lines in the same ducts as power cables or lines carrying high voltages.
- To prevent the wire cuttings that are scattered during wiring from entering the interior of the Unit, leave the label attached to the top of the Unit when performing wiring. After wiring has been completed, remove the label to allow proper heat dissipation.

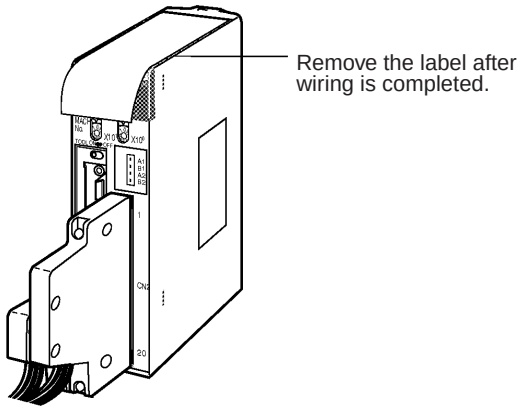

3-3 Wiring

3-3-1 I/O Connector Pin Arrangement (All Units)

Pin arrangement	Row B	Pin	Row A
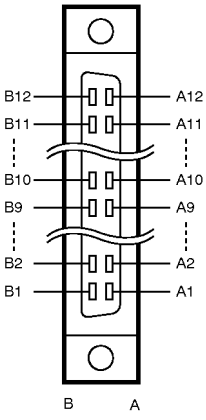	External input 0 (Interrupt input or normal input; bit 00000)	12	External input 2 (Interrupt input or normal input; bit 00002)
	External input 1 (Interrupt input or normal input; bit 00001)	11	External input 3 (Interrupt input or normal input; bit 00003)
	Common for external inputs 0 to 3	10	Common for external inputs 4 to 11
	External input 4 (Normal input; bit 00004)	9	External input 8 (Normal input; bit 00008)
	External input 5 (Normal input; bit 00005)	8	External input 9 (Normal input; bit 00009)
	External input 6 (Normal input; bit 00006)	7	External input 10 (Normal input; bit 00010)
	External input 7 (Normal input; bit 00007)	6	External input 11 (Normal input; bit 00011)
	External output 0 (Normal output; bit 00100)	5	External output 4 (Normal output; bit 00104)
	External output 1 (Normal output; bit 00101)	4	External output 5 (Normal output; bit 00105)
	External output 2 (Normal output; bit 00102)	3	External output 6 (Normal output; bit 00106)
	External output 3 (Normal output; bit 00103)	2	External output 7 (Normal output; bit 00107)
	Common for external outputs 0 to 7	1	Power supply for external outputs 0 to 7

3-3-2 Special I/O Connector Pin Arrangement

CS1W-HCP22-V1

Pin arrangement	Row A		Pin number	Row B	
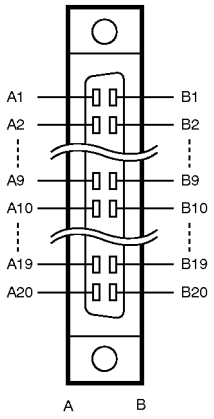	Pulse input 1	Phase A LD–/0 V	1	Pulse input 1	Phase A LD+
		Phase A 5 V	2		Phase A 24 V
		Phase B LD–/0 V	3		Phase B LD+
		Phase B 5 V	4		Phase B 24 V
		Phase Z LD–/0 V	5		Phase Z LD+
		Phase Z 5 V	6		Phase Z 24 V
	Pulse input 2	Phase A LD–/0 V	7	Pulse input 2	Phase A LD+
		Phase A 12 V	8		Phase A 24 V
		Phase B LD–/0 V	9		Phase B LD+
		Phase B 12 V	10		Phase B 24 V
		Phase Z LD–/0 V	11		Phase Z LD+
		Phase Z 12 V	12		Phase Z 24 V
		SEN output (See note.)	13		SEN_DC5V (See note.)
		Not used.	14		SEN_0V (See note.)
	Pulse output 1	CW	15	Pulse output 2	CW
		CW (with 1.6-kΩ resistance)	16		CW (with 1.6-kΩ resistance)
		CCW/one-shot pulse output	17		CCW/one-shot pulse output
		CCW/one-shot pulse output (with 1.6-kΩ resistance)	18		CCW/one-shot pulse output (with 1.6-kΩ resistance)
		Output power supply: 24 V	19		Output power supply: 24 V
		Common	20		Common

Note Supported only by -V1 units with lot numbers of 0209__ or higher. SEN output can be used for Servo Drivers with Absolute Encoders.

CS1W-HCA22-V1

Pin arrangement	Row A		Pin number	Row B	
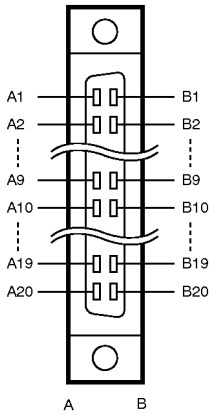	Pulse input 1	Phase A LD–/0 V	1	Pulse input 1	Phase A LD+
		Phase A 5 V	2		Phase A 24 V
		Phase B LD–/0 V	3		Phase B LD+
		Phase B 5 V	4		Phase B 24 V
		Phase Z LD–/0 V	5		Phase Z LD+
		Phase Z 5 V	6		Phase Z 24 V
	Pulse input 2	Phase A LD–/0 V	7	Pulse input 2	Phase A LD+
		Phase A 12 V	8		Phase A 24 V
		Phase B LD–/0 V	9		Phase B LD+
		Phase B 12 V	10		Phase B 24 V
		Phase Z LD–/0 V	11		Phase Z LD+
		Phase Z 12 V	12		Phase Z 24 V
	---	SEN output (See note.)	13	---	SEN_DC5V (See note.)
		Not used.	14		SEN_0V (See note.)
		Not used.	15		Not used.
		Not used.	16		Not used.
		Not used.	17		Not used.
		Not used.	18		Not used.
	Analog output 1	Voltage output (+)	19	Analog output 2	Voltage output (+)
		Voltage output (–)	20		Voltage output (–)

Note Supported only by -V1 units with lot numbers of 0209__ or higher. SEN output can be used for Servo Drivers with Absolute Encoders.

CS1W-HCA12-V1

Pin arrangement	Row A		Pin number	Row B	
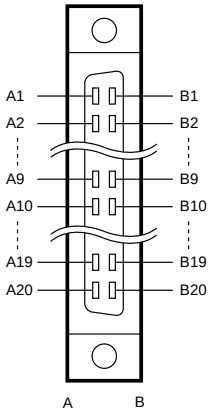	Pulse input 1	Phase A LD–/0 V	1	Pulse input 1	Phase A LD+
		Phase A 5 V	2		Phase A 24 V
		Phase B LD–/0 V	3		Phase B LD+
		Phase B 5 V	4		Phase B 24 V
		Phase Z LD–/0 V	5		Phase Z LD+
		Phase Z 5 V	6		Phase Z 24 V
		SEN output (See note 1.)	7	Pulse input 2	SEN_DC5V (See note 1.)
		Not used.	8		SEN_DC0V (See note 1.)
		Not used.	9		Not used.
		Not used.	10		Not used.
		Not used.	11		Not used.
		Not used.	12		Not used.
		Not used.	13	---	Not used.
		Not used.	14		Not used.
		Not used.	15		Not used.
		Not used.	16		Not used.
	Analog input 1	Voltage input (+)	17	Analog intput 2	Current input (See note 2.)
		Voltage input (–)	18		(Current input common)
	Analog output 1	Voltage output (+)	19	Analog output 2	Voltage output (+)
		Voltage output (–)	20		Voltage output (–)

Note 1. Supported only by -V1 units with lot numbers of 0209__ or higher. SEN output can be used for Servo Drivers with Absolute Encoders.

2. When using current inputs (4 to 20 mA), always short the Pin17 in row A (Voltage input (+)) to the Pin17 in row B (Current input).

3-3-3 Wiring Examples

Pulse Inputs (CS1W-HCP22-V1/HCA22-V1/HCA12-V1)

Connect the output from an encoder to the connector in the following way, according to the port's counting mode.

Port 1	Port 2	Signal name	Encoder output		
Pin number	Pin number		Differential-phase Input Mode	Increment/ Decrement Pulse Input Mode	Pulse+Direction Input Mode
24 V: B2(A1) 5 V: A2(A1)	24 V: B8(A7) 12 V: A8(A7)	Encoder input A	Encoder phase-A input	Increment pulse input	Pulse input
24 V: B4(A3) 5 V: A4(A3)	24 V: B10(A9) 12 V: A10(A9)	Encoder input B	Encoder phase-B input	Decrement pulse input	Direction signal input

Note The symbols in parentheses indicate the pin numbers on the minus side.

Example

The wiring for an encoder (24 V) with an open-collector output is shown below. These examples are for encoders with A, B, and Z phases.

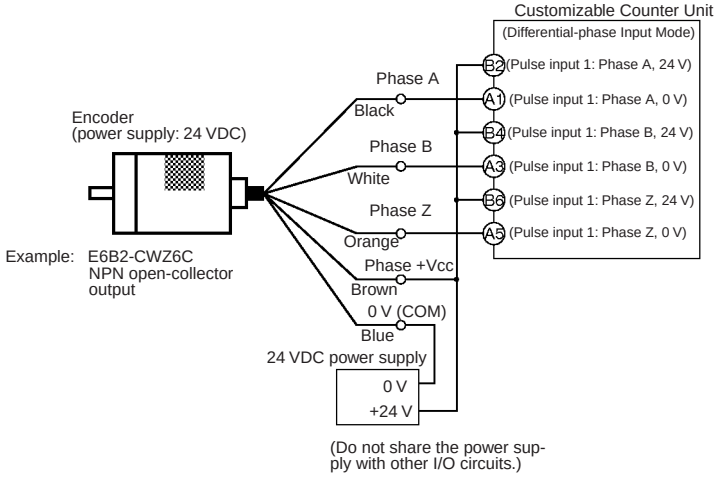

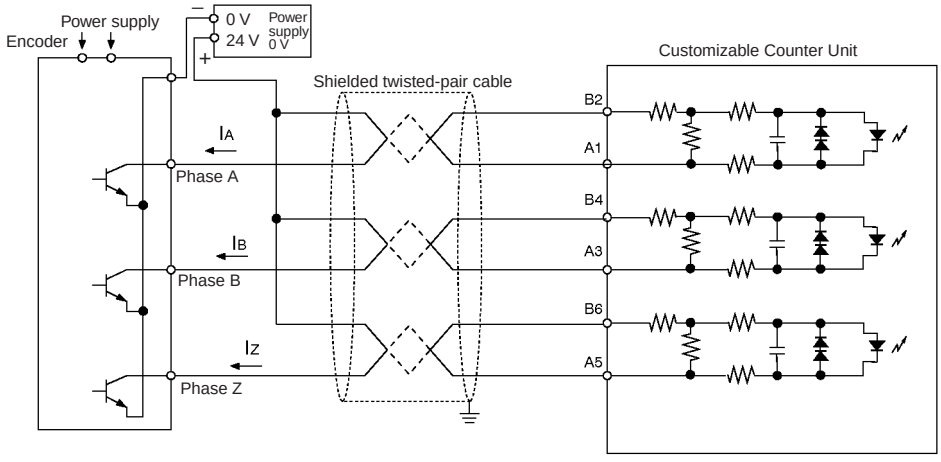

The wiring for when the encoder has a linedriver output (Am26LS31 or equivalent) is shown below.

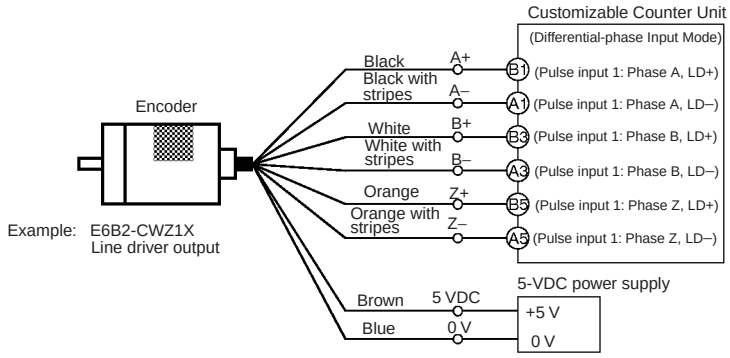

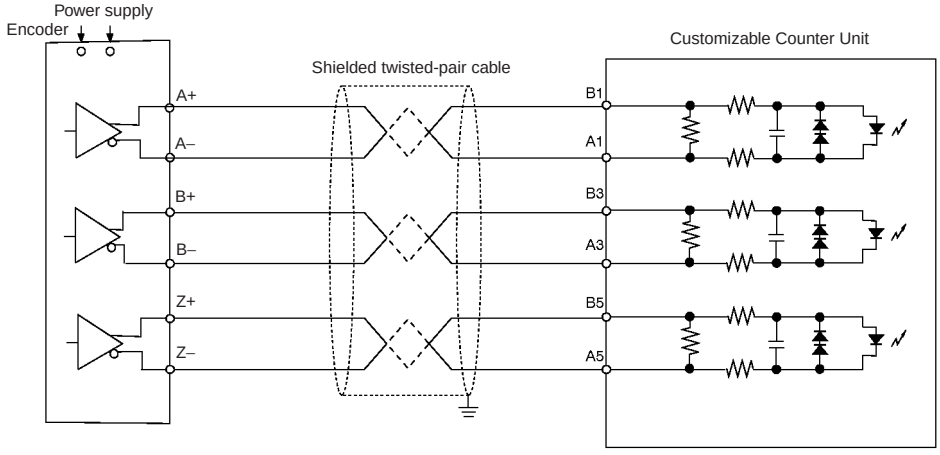

Pulse Outputs (CS1W-HCP22-V1)

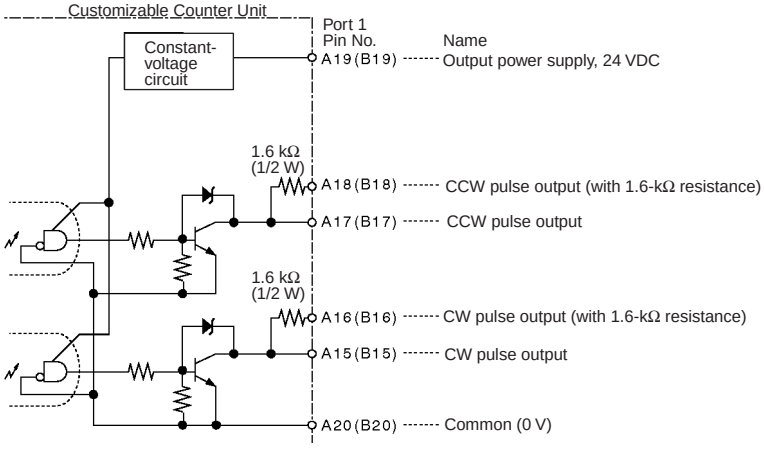

Example

As an example, the wiring for connection to a motor driver is shown below.

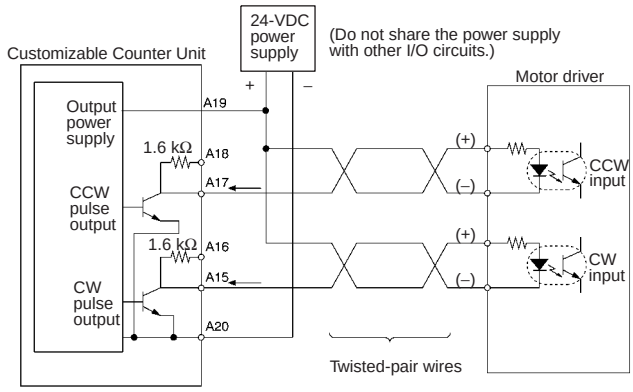

Note

1. Be sure to connect the input (24 VDC) for the output power supply correctly.
2. Connect loads of between 7 and 30 mA to pulse output. (When connecting loads of less than 7 mA, add a bypass resistance.)
3. A resistance of 1.6 kΩ (1/2 W) is included in the internal circuits for pulse output (A16, A18, B16, B18). Use in one of the ways shown below, according to the power supply, the motor driver specifications, and other specifications.

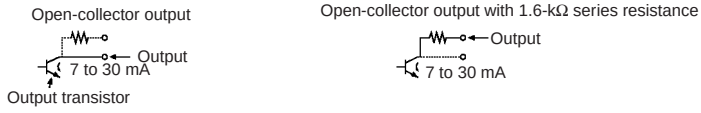

4. The transistors in the internal circuits for pulse output turn OFF when pulse output is stopped.

Analog Outputs (CS1W-HCA22-V1/HCA12-V1)

Connect the output signals to the connector as shown below.

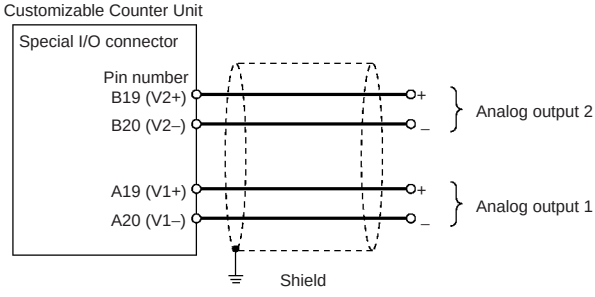

Connection with a Servo Driver (OMRON's W Series) with an Absolute Encoder (CS1W-HCP22-V1/HCA22-V1/HCA12-V1)

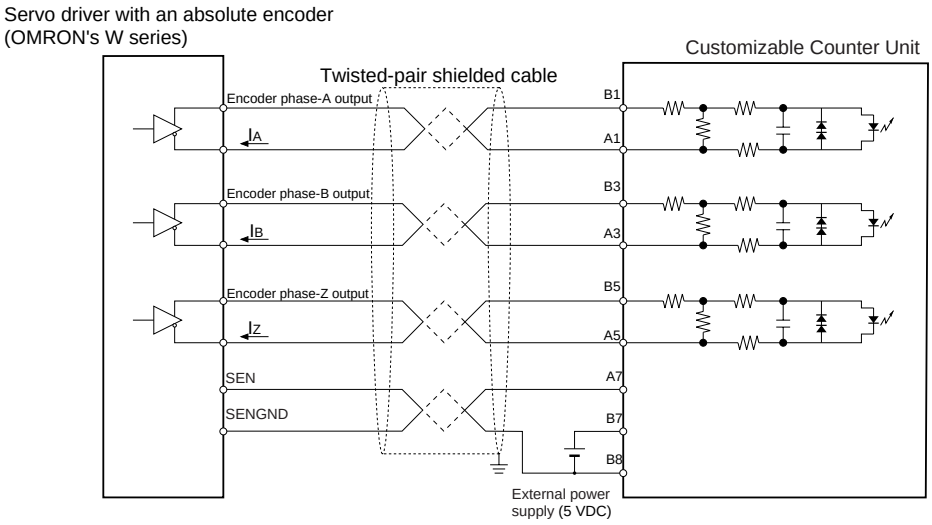

Note Supported only by -V1 units with lot numbers of 0209__ or higher. SEN output can be used for Servo Drivers with Absolute Encoders.

Connection of Analog Inputs (Model CS1W-HCA12-V1)

Voltage Input

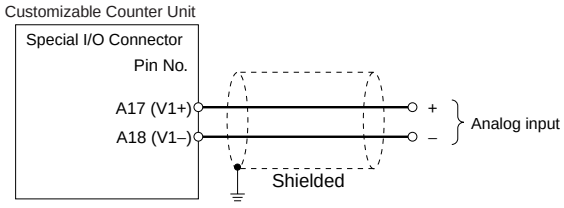

Current Input

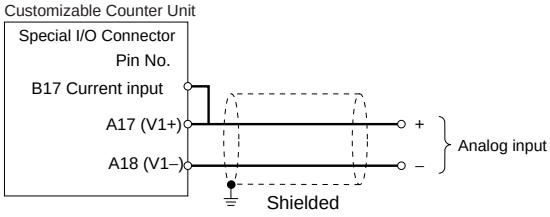

3-3-4 Wiring Methods

Either make a cable using the special connector (included with Unit or purchased separately), or connect to a terminal block using an OMRON special cable with a connector.

Note

1. Do not apply voltages that exceed the maximum switching capacity of output circuits and the input voltage of I/O circuits.
2. When wiring the power supply, where there are positive or negative terminals; be sure not to mistake positive and negative.
3. To conform to the EC Low Voltage Directive, use a DC power supply for I/O that has reinforced or double insulation.
4. When mounting I/O connectors, tighten the connector screws to a torque of 0.2 N·m.
5. Check that connector wiring has been performed correctly before supplying power.

6. Do not pull on cables. Doing so may result in disconnection.
7. Do not bend cables beyond their natural limit. Doing so may result in disconnection.

Connectors

Connections to the I/O Connector

Connector type	Number of pins	Ordering as a set (OMRON)	Ordering individually (Fujitsu)
Soldered (See note.)	24 pins	C500-CE241	Socket: FCN-361J024-AU Connector cover: FCN-360C024-J2
Crimp	24 pins	C500-CE242	Housing: FCN-363J024 Connector cover: FCN-360C024-J2 Contact: FCN-363J-AU
Pressure welded	24 pins	C500-CE243	FCN-367J024-AU/F

Note A soldered connector is provided with the Unit.

Connections to the Special I/O Connector

Connector type	Number of pins	Ordering as a set (OMRON)	Ordering individually (Fujitsu)
Soldered (See note.)	40 pins	C500-CE404	Socket: FCN-361J040-AU Connector cover: FCN-360C040-J2
Crimp	40 pins	C500-CE405	Socket: FCN-363J040 Connector cover: FCN-360C040-J2 Contact: FCN-363J-AU
Pressure welded	40 pins	C500-CE403	FCN-367J040-AU

Note A soldered connector is provided with the Unit.

Applicable Connector Terminal Conversion Units

Connecting Cable	Connector–Terminal Conversion Unit	Number of pins	Size
XW2Z-□□□B	XW2D-40G6	40 pins	Miniature
	XW2B-40G5		Standard
	XW2B-40G4		Standard
XW2Z-□□□BU	XW2D-40C6		Miniature

Recommended Wire Size

The recommended size for cable wires is AWG 24 to 26 (0.2 to 0.13 mm^2). Use a cable with an outer diameter of less than 1.61 mm.

Wiring Method

1,2,3...

1. Check that all the Units are mounted securely.

   Note Ensure that pressure is not exerted on cables.
2. To prevent the wire cuttings that are scattered during wiring from entering the interior of the Unit, leave the label attached to the top of the Unit when performing wiring. After wiring has been completed, remove the label to allow proper heat dissipation.

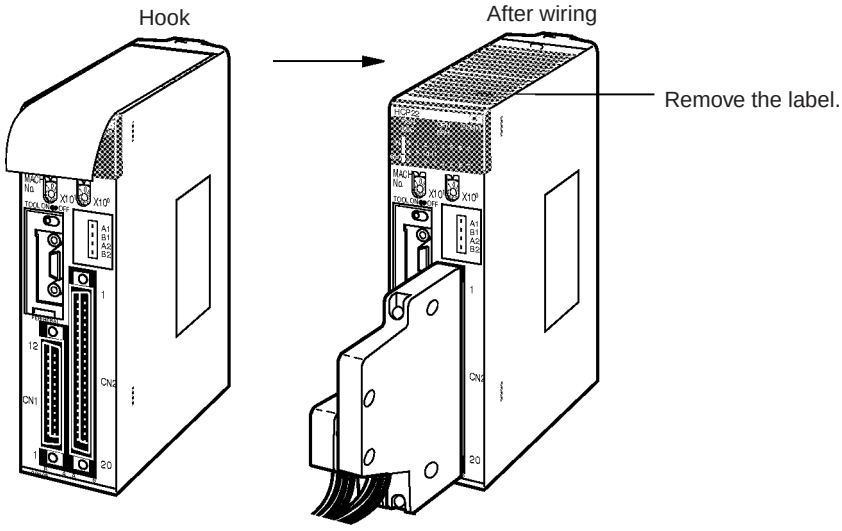

3. When soldering, take care not to short the terminal to the neighboring one. Cover the soldered part with an insulating tube.

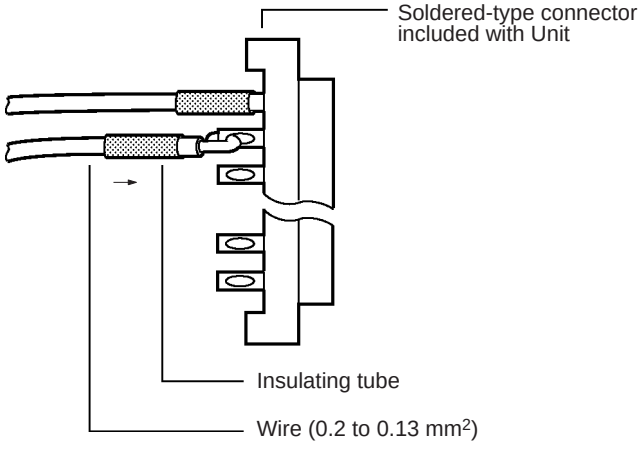

Note Be sure to check that the output power supply is not connected in reverse.

4. Assemble the connector (included or purchased separately) as shown below. The shape of the 40-pin connector is different to that shown in the diagram.

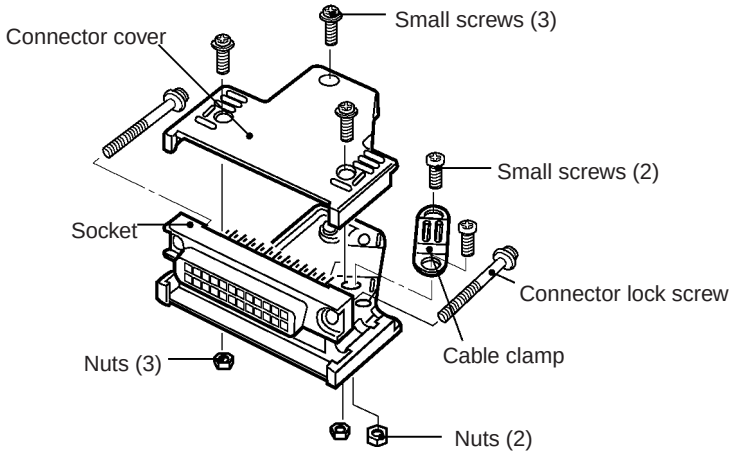

5. Mount the connector.

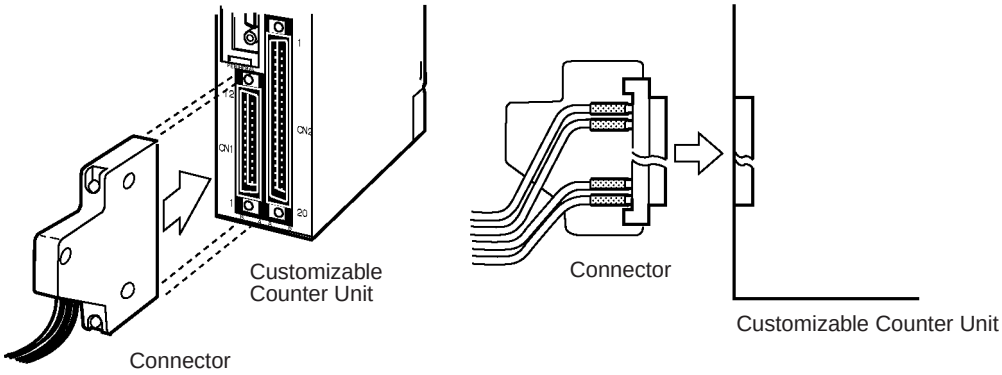

6. After wiring has been completed, be sure to remove the label to allow proper heat dissipation.

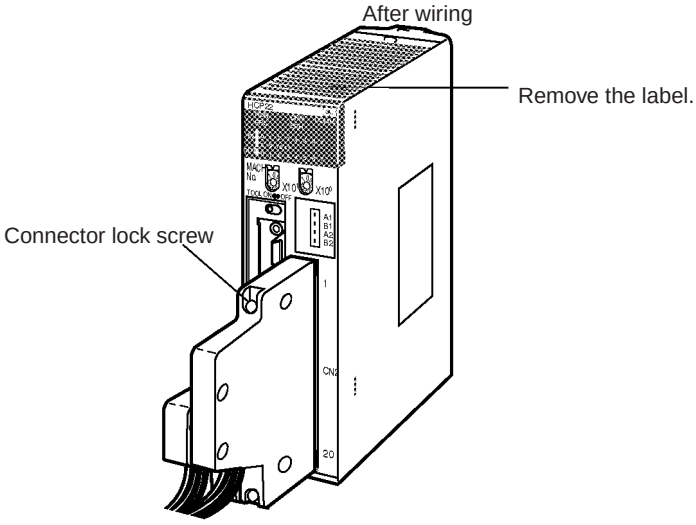

Tighten the connector lock screw to a torque of 0.2 N·m.

Mounting Dimensions

The dimensions when the Unit is mounted to the Rack and the cable connectors are connected are shown below.

With soldered or crimped Fujitsu connector:

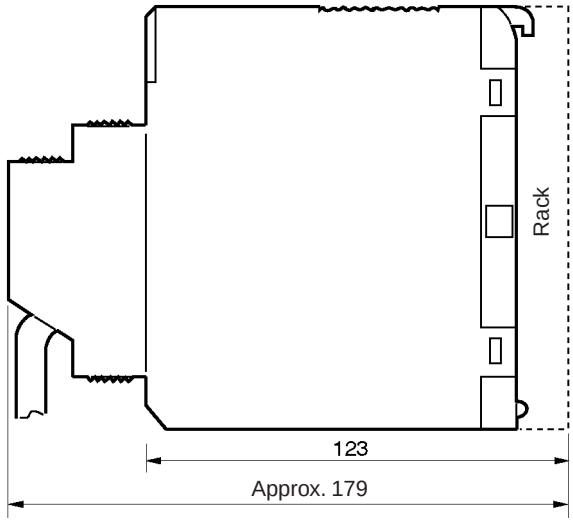

With pressure-welded Fujitsu connector;
Connecting cable: G79-□□□C-□□□-□□□
XW2Z-□□□

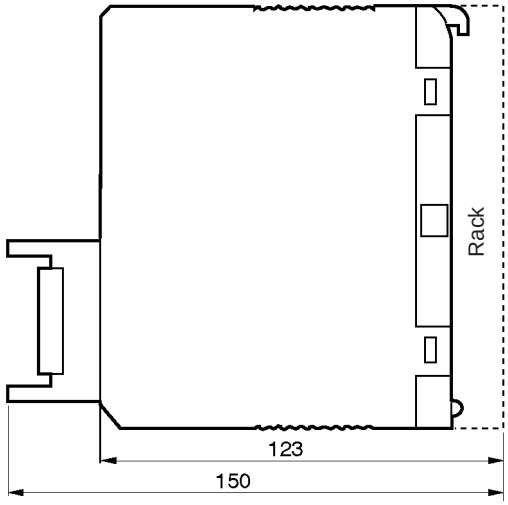

3-4 Programming Devices

Development, transfer, and monitoring of ladder programs, editing and monitoring of I/O memory, and settings for the Unit Setup Area are carried out using a Programming Device. Programming Devices include Hand-held Programming Consoles and the CX-Programmer, which is installed onto a computer. Connection to either is made using the peripheral port on the front of the Unit.

Note

1. The Programming Device cannot be used for the Unit if it is connected to a serial communications port (peripheral port, RS-232C port) on the CPU Unit.
2. When using the CX-Programmer, register the Customizable Counter Unit as a CQM1H-CPU61.

Compatible Programming Devices

The following Programming Devices can be used.

- Programming Consoles
- CX-Programmer Ver. 1.2 or later (register the PLC model as a CQM1H-CPU61.)

Note

1. The Customizable Counter Unit cannot be used with CX-Programmer Ver. 1.1 or earlier.
2. The SYSMAC-CPT or SYSMAC Support Software cannot be used.

Functions Supported by Programming Devices

The functions available when using a Programming Device with the Customizable Counter Unit are the same as when using one with a CPU Unit with the following exceptions.

- PLC Setup functions
- Reading the error log
- PLC clock
- Forced set/reset of the PLC
- Data trace
- Reading the cycle time
- PLC information display

Note Before using the CX-Programmer, refer to the appendix, *Precautions in Using the CX-Programmer.*

Settings

The following settings are required when using a Programming Device.

Programming Device Connection Switch

You must turn ON the Programming Device connection switch on the front of the Unit before connecting a Programming Device to the peripheral port. It will not be possible to connect to the Programming Device if this switch is turned OFF. (Turn OFF this switch, however, to prevent malfunctions due to operational errors.)

Programming Device connection switch	Programming Device
Set to ON: TOOL ON OFF	Connection enabled (The switch must be turned ON to use a Programming Device.)
Set to OFF: TOOL ON OFF	Connection disabled (Turn OFF the switch to prevent operational errors.)

Unit Setup Area

When connecting a Programming Device to the peripheral port, depending on the type of Programming Device, the serial communications mode, and communications conditions used, the Unit Setup Area (DM 6650 to DM 6651) settings may or may not be necessary. This is shown in the following table.

Programming Device	Serial communications mode (recognized by Unit)	Communications conditions	Unit Setup Area (DM 6650 to DM 6651)	Setting in CX-Programmer
Programming Console	(Programming Console bus)	---	Settings not required	---
CX-Programmer	Peripheral bus	9,600 bps	Settings not required	Set to the same communications conditions.
		Other than above	Set in DM 6650 to DM 6651 (baud rate only)	

3-4-1 Programming Consoles

The following three Programming Console are available:

- CQM1H-PRO01
- CQM1-PRO01
- C200H-PRO27

Programming Console Connections

Port at the Customizable Counter Unit	Programming Device connection switch setting	Programming Console model	Type of network (serial communications mode)	Cables	
				Model number	Length
Peripheral port	ON	C200H-PRO27	Programming Console bus (automatic recognition)	C200H-CN222 and CS1W-CN114	2 m and 0.05 m
				C200H-CN422 and CS1W-CN114	4 m and 0.05 m
				CS1W-CN224	2 m
				CS1W-CN624	6 m
		CQM1-PRO01		Cable included with Programming Console and CS1W-CN114	2 m and 0.05 m
		CQM1H-PRO01		(Included with Programming Console.)	2 m

3-4-2 CX-Programmer

The CX-Programmer versions that can be used with the Customizable Counter Unit are given in the following table.

Name	Model number	Computer	Serial communications mode	Model setting on the CX-Programmer	Functional limitations
CX-Programmer Ver. 1.2 or later (on CD-ROM)	WS02-CXPC1-E	IBM PC/AT or compatible OS: Microsoft Windows 95 or 98	Peripheral bus	CQM1H-CPU61	Yes

Note The functional limitations when using the CX-Programmer with the Customizable Counter Unit are shown in the following table.

- **Functional Limitations**

Item	CX-Programmer Ver. 1.2 or later
Selected device type	Select CQM1H-CPU61.
Editing the PLC Setup	Not supported. (The settings in DM 6600 to DM 6655 must be made in the PLC Memory Window.)
Memory displays	Displayed for CQM1H.

Connecting Cables

Connecting to the Computer

Computer	Connecting to peripheral port
IBM PC/AT or compatible (D-sub, 9-pin male)	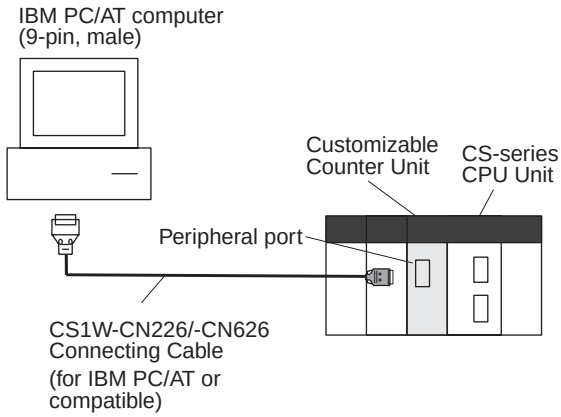

Available Connecting Cables

Customizable Counter Unit port	Programming Device connection switch setting	Computer	Serial communications mode	Model number	Length
Peripheral port	ON	IBM PC/AT or compatible Port: D-sub, 9-pin, male	Peripheral bus	CS1W-CN226/626	2 m/6 m
				CS1W-CN118 and XW2Z-200S-CV/500S-CV (Use XW2Z-□□□S-CV for which ESD countermeasures have been taken.)	0.1 m + 2 m/5 m

Note The CS1W-CN225/-CN625/-CN227/-CN627 Connecting Cables and the FIT10/20 CQM1-CIF11 Connecting Cables cannot be used with the Customizable Counter Unit.

3-5 Fail-safe Circuits

You must set up safety circuits outside of the Customizable Counter Unit to prevent dangerous conditions in the event of errors in the Unit or external power supply. Take particular care of the following points.

⚠ **WARNING** Take any safety measures necessary outside of the Unit to ensure the safety of the system in the event of an error due to Unit malfunction or external factors. Failure to do so could lead to a serious accident.

- Provide interlock circuits, limit circuits, emergency stop circuits, and similar safety measures in the PLC's external control circuits.
- Operation will stop and all contact and pulse outputs will turn OFF when the PLC detects an error or when a FALS(07) (fatal error) instruction is executed. You must take any safety measures necessary outside of the Unit to ensure the safety of the system in the event that all contact and pulse outputs turn OFF.
- It is possible for an output to remain ON or OFF due to a factors, such as damage to a transistor in the internal circuit of a contact output. Provide any circuits necessary outside of the PLC to ensure the safety of the system in the event that a contact output fails to turn OFF or ON.
- If there is an overload or a short-circuit in the Power Supply Unit's 24-VDC output (service power supply), the voltage may drop and the outputs may

turn OFF. Take any safety measures necessary outside of the Unit to ensure the safety of the system in the event that outputs turn OFF.

Supply Power to the PLC before Outputs

If the PLC's power supply is turned ON after the controlled system's power supply, contact outputs may malfunction momentarily and, as a result, the controlled system's outputs may operate incorrectly for a short time. To prevent any malfunction, add an external circuit that prevents the power supply to the controlled system from going ON before the power supply to the PLC itself.

Unit Errors

When any of the following fatal errors occur at the Customizable Counter Unit, the Unit will stop operation (and processing) and all contact outputs and pulse outputs will be turned OFF:

- A Unit WDT error, a Unit RAM error, a memory error, a no END instruction error, a FALS instruction execution, or a CYCLE TIME OVER error

Note For analog outputs, either the value set (maximum value, present value, clear) with the output hold function in the Unit Setup Area (DM 6614) or 0 V will be output. (For details, refer to *7-7 Analog Outputs*.)

Set up safety circuits outside of the Customizable Counter Unit to prevent dangerous conditions in the event of the above errors.

Contact Output Failures

It is possible for an output to remain ON due to a malfunction in the internal circuitry of a contact output, such as a transistor failure. Provide any circuits necessary outside of the PLC to ensure the safety of the system in the event that a contact output fails to turn OFF.

Interlock Circuits

When the PLC output controls opposite operations, such as forward and reverse operation of a motor, or in cases where incorrect PLC operation may cause an accident or damage to equipment, set up interlock circuits outside the PLC. An example is given below.

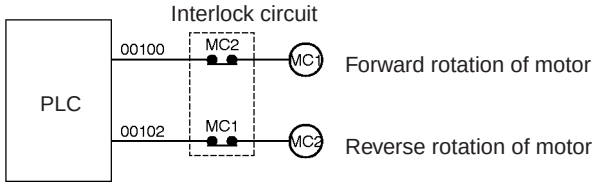

In the above example, if outputs IR 00100 and 00102 both turn ON together (incorrect operation), the interlock circuit will stop MC1 and MC2 turning ON together.

SECTION 4
Exchanging Data with the CPU Unit

This section provides details on the way in which data is exchanged between the Customizable Counter Unit and the CPU Unit.

4-1 Overview 60
4-1-1 Overview of Data Exchange Areas 60
4-1-2 Data Exchange Using the Words Allocated in CIO Area 61
4-1-3 Data Exchange Using the Words Allocated in DM Area. 62
4-1-4 Data Exchange Using the LR Area Words. 63
4-2 Words Allocated in CIO Area 63
4-2-1 Allocated Words. 63
4-2-2 CIO Area Allocation Details 65
4-3 Words Allocated in DM Area. 67
4-3-1 Allocated Words. 67
4-3-2 DM Area Allocation Details 68
4-3-3 Example Allocations 71
4-4 LR Area 71
4-4-1 Data Exchange Using the LR Area 71
4-4-2 Unit Setup Area 72
4-4-3 Example 72
4-5 Difference between I/O Refreshing in Customizable Counter Units and That in Other Special I/O Units 72

4-1 Overview

The Customizable Counter Unit exchanges data with the CPU Unit in the following 3 areas.

1. Using allocated words in the CPU Unit's CIO Area.
2. Using allocated words in the CPU Unit's DM Area.
3. Using the Customizable Counter Unit's LR Area.

4-1-1 Overview of Data Exchange Areas

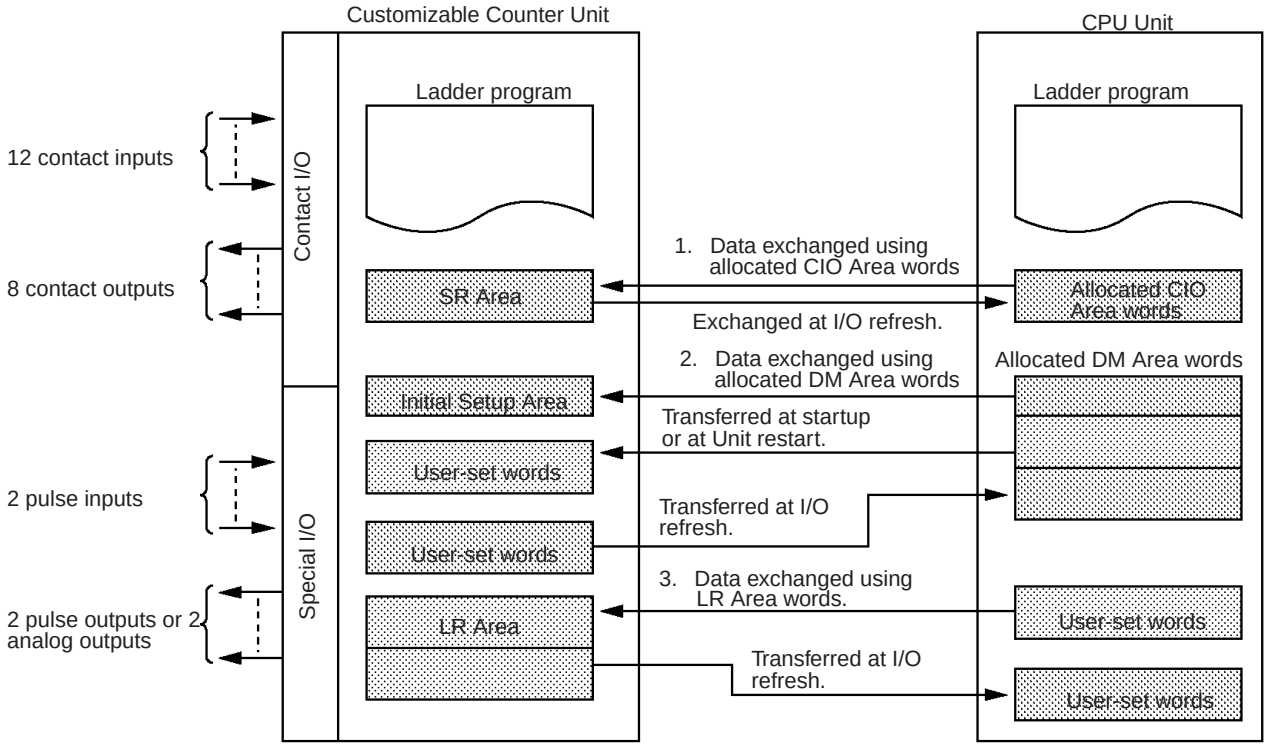

n = CIO 2000 + (unit number × 10) in the CPU Unit
m = D20000 + (unit number × 100) in the CPU Unit

Method	Customizable Counter Unit words	CPU Unit words	Special-ized or general-purpose	From CPU Unit to Cus-tomizable Counter Unit	From Custom-izable Counter Unit to CPU Unit	Timing of transfer	Specification method
1. Data exchanged using allo-cated CIO Area words	SR Area (SR 230 to SR 239)	Allocated CIO Area words (n to n+9)	Specialized	1 word (n)	1 word (n+5)	At I/O refresh (See note.)	Fixed
			General-purpose	4 words (n+1 to n+4)	4 words (n+6 to n+9)		
2. Data exchanged using allo-cated DM Area words	User-set words (in the DM, EM, CIO, LR, or AR Area)	Allocated DM Area words (m to m+99)	Special-ized (Initial Setting Area)	10 words (m to m+9)	None	At startup or Unit restart	The user-set words in the Customizable Counter Unit are specified in allocated DM Area words (m+1 to m+5).
			General-purpose	90 words total (m+10 to m+99)		At I/O refresh (See note.)	---
3. Data exchanged using LR Area words	LR Area	User-set words (in the CIO, WR, AR, HR, DM, or EM Areas)	General-purpose	32 words total		At I/O refresh (See note.)	The user-set words in the CPU Unit are specified in the Unit Setup Area in the Customizable Counter Unit.

Note Data is exchanged during the I/O refresh period of the CPU Unit.

4-1-2 Data Exchange Using the Words Allocated in CIO Area

Data is exchanged cyclically (i.e., at I/O refresh) between the CPU Unit's words allocated in CIO Area (n to n+9) and Customizable Counter Unit's SR Area words SR 230 to SR 239. This data exchange consists of two types of data.

1,2,3...

1. CIO Area words allocated to special functions (n, n+5): These words are used for commands from the CPU Unit and status notification from the Customizable Counter Unit.
2. CIO Area words for general-purpose data (n+1 to n+4, n+6 to n+9)

Note n = 2000 + (unit number × 10) in the CPU Unit

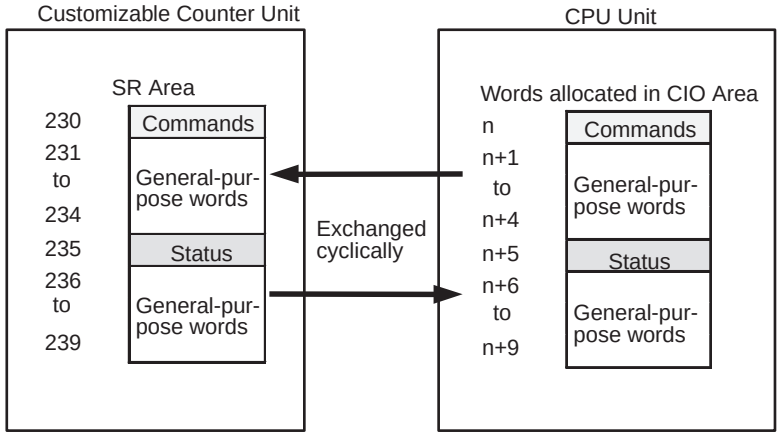

4-1-3 Data Exchange Using the Words Allocated in DM Area

The data exchanged using the words allocated in DM Area consists of two types of data.

1,2,3...

1. At startup or Unit restart, the Customizable Counter Unit's initial settings (e.g., the startup operating mode) are transferred from the CPU Unit's DM Area words m to m+9.
2. General-purpose data is exchanged cyclically between the DM Area words m+10 to m+99 and the user-set words (e.g., in the DM Area or CIO Area) in the Customizable Counter Unit.

Note m = D20000 + (unit number × 100) in the CPU Unit

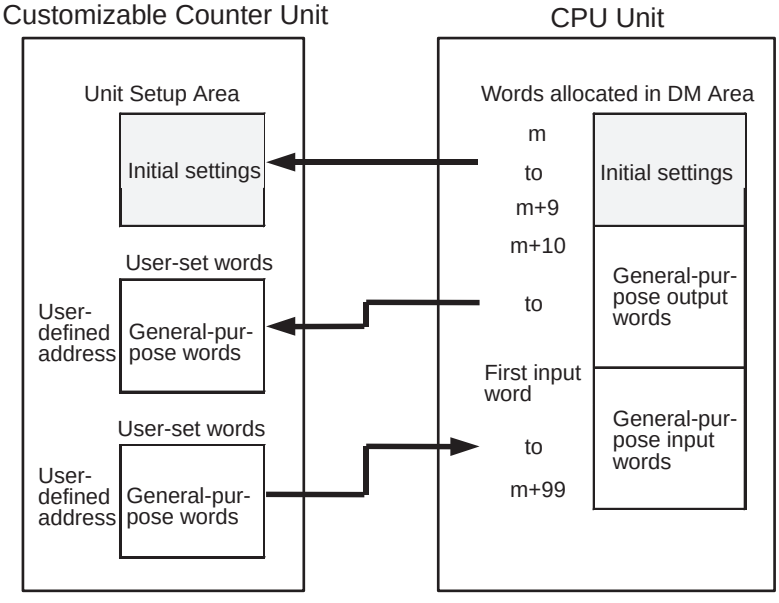

4-1-4 Data Exchange Using the LR Area Words

General-purpose data is exchanged cyclically between user-set words in the CPU Unit (e.g., in the CIO, WR, or DM Area) and the Customizable Counter Unit's LR Area words.

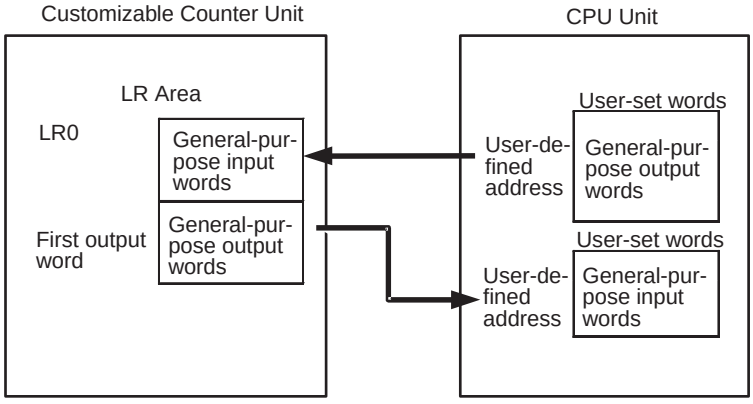

Note If the Load OFF Bit, A50015, in the CPU Unit is turned ON, the following words will be turned OFF in the Customizable Counter Unit at the next I/O refresh.

a) Words n to n+4 (CIO Area words transferred from CPU Unit)

b) Words m+10 to specified last word (DM Area words transferred from CPU Unit)

c) LR 00 to specified last word (CPU Unit words transferred to LR Area in Customizable Counter Unit)

If the RUN/STOP Command Bit is enabled (i.e., if word m bits 00 to 07 are 00 Hex), the RUN/Stop Command Bit (word n bit 00) will turn OFF and the operation of the Customizable Counter Unit will stop.

If the RUN/STOP Command Bit is disabled (i.e., if word m bits 00 to 07 are 01 Hex), the following type of programming is required to turn OFF Customizable Counter Unit outputs: Turn ON one of the general-purpose bits in the allocated words in the CIO Area and when the bit turns OFF (as a result of A50015 turning ON), use it in the Customizable Counter Unit to turn OFF the outputs.

4-2 Words Allocated in CIO Area

4-2-1 Allocated Words

SR 230 to SR 239 (10 words) in the Customizable Counter Unit's SR Area are allocated to words in the Special I/O Unit Area in the CPU Unit's CIO Area (CIO 2000 to CIO 2959) according to the unit number (0 to 95) set for the Customizable Counter Unit using the rotary switches on the front of the Unit.

The following table shows the relationship between the unit number setting and the CPU Unit's word allocations.

Unit number	Allocated words
0	CIO 2000 to CIO 2009
1	CIO 2010 to CIO 2019
2	CIO 2020 to CIO 2029
3	CIO 2030 to CIO 2039
4	CIO 2040 to CIO 2049
5	CIO 2050 to CIO 2059
6	CIO 2060 to CIO 2069
7	CIO 2070 to CIO 2079
8	CIO 2080 to CIO 2089
9	CIO 2090 to CIO 2099
10	CIO 2100 to CIO 2109
...	...
n	CIO 2000 + (n×10) to CIO 2000 + (n×10) + 9
...	...
95	CIO 2950 to CIO 2959

Data in the 10 allocated words is exchanged at the CPU Unit's I/O refresh (on the CPU Unit's timing). The data exchanged consists of the following 2 types:

1,2,3...

1. Words to which special functions have been allocated (n bit 00, n+5)
2. General-purpose words to which functions have not been allocated (n bits 08 to 15, n+1 to n+4, n+6 to n+9)

4-2-2 CIO Area Allocation Details

The following data is output from the CPU Unit to the Customizable Counter Unit.

n = CIO 2000 + (unit number × 10)

CPU Unit word address	Customizable Counter Unit word	Bits	Name	Function
n	SR 230	00	RUN/STOP Command	This bit is used to start and stop Customizable Counter Unit operation from the CPU Unit. (Valid only when 00 Hex is stored in bits 00 to 07 in word m allocated in the DM Area.) OFF: STOP command (switches to PROGRAM mode) ON: RUN command (switches to RUN or MONITOR mode) **Note** If 00 Hex is stored in word m bits 00 to 07, the operating mode at startup is determined by this RUN/STOP command. (The mode can be switched between RUN mode and MONITOR mode from the Programming Device connected to the Customizable Counter Unit.) If anything other than 00 Hex is stored in word m bits 00 to 07, this RUN/STOP command will be ignored. If the RUN/STOP command is enabled (i.e., 00 Hex is stored in word m bits 00 to 07), the RUN/STOP Command Bit will turn OFF and the program in the Customizable Counter Unit will stop whenever the Load OFF Bit in the CPU Unit (A50015) is turned ON.
		01 to 05	(Reserved by system.)	---
		06	Back up data write	OFF to ON: Commands to write back up data in the unit to memory card inserted in CPU unit (At rise) Corresponds to SR 230, bit 06 of special auxiliary bits in the unit
		07	Back up data read	OFF to ON: Commands to read back up data from memory card inserted in CPU unit to the unit Corresponds to SR 230, bit 07 of special auxiliary bits in the unit
		08 to 15	General- purpose output data	These bits are used to send general-purpose data from the CPU Unit to the Customizable Counter Unit's SR Area (SR 23008 to SR 23015).
n+1	SR 231	00 to 15	General- purpose output data	These bits are used to send general-purpose data from the CPU Unit to the Customizable Counter Unit's SR Area (SR 231 to SR 234).
n+2	SR 232	00 to 15		
n+3	SR 233	00 to 15		
n+4	SR 234	00 to 15		

The following data is input from the Customizable Counter Unit to the CPU Unit.

CPU Unit address	Customizable Counter Unit word	Bits	Name	Function
n+5	SR 235	00 to 07	Unit error code	These bits are used to notify the CPU Unit of the error code for errors that occur in the Customizable Counter Unit. Example: CYCLE TIME OVER error (more than 10 ms): F8; Unit Function Setting error: 9B; Cycle Monitor Time Overrun error (more than the time set in DM 6618): 9F; FALS (fatal error) instruction execution or FAL (non-fatal error) instruction execution: 01 to 99. (Refer to *9-3 Troubleshooting Tables*.) The error code is also stored in bits 00 to 07 of the detailed information in the error log stored in the Customizable Counter Unit.
		08	(Reserved by system.)	---
		09	Unit Cycle Time Exceeded	This bit is used to notify the CPU Unit when the cycle time is exceeded in the Customizable Counter Unit. OFF: No error (cycle time less than 10 ms) ON: Cycle time exceeded (cycle time more than 10 ms) **Note** Only valid when set to detect CYCLE TIME OVER errors (set in DM 6655). SR 23509 turns ON when a CYCLE TIME OVER error (more than 10 ms) occurs. The Unit error code F8 is stored in bits 00 to 07 of word n+5 in the CPU Unit (and consequently SR 23500 to SR 23507 in the Customizable Counter Unit).
		10	Unit non-fatal error (including FAL execution)	OFF: No non-fatal error ON: Non-fatal error occurred (e.g., Unit function setting error, CPU Unit fatal error)
		11	Unit fatal error (including FALS execution)	OFF: None of the errors below have occurred. ON: One of the following errors has occurred: FALS instruction executed; no END instruction; error with special I/O, Cycle Monitor Time Exceeded (set in DM 6618 in the Unit Setup Area).
		12	Memory card transfer error	0: No error 1: Transfer error occurred
		13	(Reserved by system.)	---
		14	Unit busy	This bit indicates whether or not the Customizable Counter Unit is busy. OFF: The Unit is not busy. ON: The Unit is busy (i.e., performing initial processing, or transferring data to memory card).
		15	Unit operating status	This bit is used to notify the CPU Unit of the operating status of the Customizable Counter Unit. OFF: STOP (PROGRAM mode) ON: RUN (RUN or MONITOR mode) **Note** When this bit turns ON, the OPN indicator on the front of the Unit lights.
n+6	SR 236	00 to 15	General-purpose input data	These bits are used to send general-purpose data from the Customizable Counter Unit's SR Area word SR 236 to SR 239 to the CPU Unit.
n+7	SR 237	00 to 15		
n+8	SR 238	00 to 15		
n+9	SR 239	00 to 15		

4-3 Words Allocated in DM Area

4-3-1 Allocated Words

A total of 100 words are allocated from words in the CPU Unit's DM Area for Special I/O Units (D20000 to D29599) according to the unit number (0 to 95) set for the Customizable Counter Unit using the rotary switches on the front of the Unit.

- The following table shows the relationship between the unit number setting and the CPU Unit's allocations.

Unit number	Allocated words
0	D20000 to D20099
1	D20100 to D20199
2	D20200 to D20299
3	D20300 to D20399
4	D20400 to D20499
5	D20500 to D20599
6	D20600 to D20699
7	D20700 to D20799
8	D20800 to D20899
9	D20900 to D20999
10	D21000 to D21099
...	...
n	D20000 + (n×100) to D20000 + (n×100) + 99
...	...
95	D29500 to D29599

The allocated words are divided into two areas: The Initial Setting Area (m to m+9), to which specific functions have been allocated, and general-purpose words (m+10 to m+99), to which functions have not been allocated.

1,2,3...

1. The contents of the Initial Setting Area (m to m+9) are transferred from the CPU Unit to the Customizable Counter Unit at startup or when the Customizable Counter Unit is restarted.
2. General-purpose words (m+10 to m+99) can be allocated to user-set words in the DM, EM, IR, LR, or AR Area in the Customizable Counter Unit. The contents of general-purpose words are exchanged with the CPU Unit at the CPU Unit's I/O refresh (i.e., on the CPU Unit's timing).

4-3-2 DM Area Allocation Details

Initial Setting Area (m to m+9)

Word	Bits	Function	Contents				
			Setting		Condition		
					Operating mode at startup	Operating mode specification after startup	Operation for error at PLC (SR 24915 turns ON)
m	00 to 07	RUN/STOP command enable/disable and operating mode at startup	00 Hex	RUN/STOP command enabled	Determined by the status of the RUN/STOP Command Bit (n, bit 00). The operating mode can be switched between RUN mode and MONITOR mode using the Programming Device connected to the Customizable Counter Unit.		The RUN/STOP Command Bit (n, bit 00) turns OFF and Customizable Counter Unit operation stops. **Note:** There are errors for which the RUN/STOP Command Bit may not turn OFF. For details, refer to *9-3 Troubleshooting Tables*.
			01 Hex	RUN/STOP command disabled	Determined by the operating mode specification of the Programming Console. **Note:** If there is no Programming Console connected or if the Programming Device connection switch on the front of the Unit is set to OFF, the mode is automatically set to RUN mode.	Determined by commands from the Programming Device (CX- Programmer or the Programming Console). **Note:** The RUN/STOP command (n, bit 00) is disabled.	Customizable Counter Unit operation continues.
			02 Hex		PROGRAM mode		
			03 Hex		MONITOR mode		
			04 Hex		RUN mode		
	08 to 15	(Reserved by system.)				---	

Word	Bits	Function	Contents		
m+1	00 to 07	Input and output of general-purpose data from/to the Customizable Counter Unit	First word address of the output words in the words allocated in DM Area (for output from the CPU Unit to the Customizable Counter Unit)		00 (BCD): Disabled (i.e., no transfer from the CPU Unit to the Customizable Counter Unit) 01 to 09 (BCD): Invalid (read as incorrect setting) 10 to 99 (BCD): Offset address for first word (i.e., first word address = m + this setting)
	08 to 15		First word address of the input words in the words allocated in DM Area (for input from the CPU Unit to the Customizable Counter Unit)		00 (BCD): Disabled (i.e., no transfer from the Customizable Counter Unit to the CPU Unit) 01 to 09 (BCD): Invalid (read as incorrect setting) 10 to 99 (BCD): Offset address for first word (i.e., first word address = m + this setting)
m+2	00 to 11		Output refresh (for output from the CPU Unit to the Customizable Counter Unit)	Number of words transferred from the CPU Unit to the Customizable Counter Unit	0001 to 090 (BCD): 1 to 90 words **Note:** There are various restrictions on the transfer of data. For example, the total number words transferred at input and output refresh must not exceed 90 words. (See note.)
	12 to 15			Area in the Customizable Counter Unit	0 Hex: DM 1 Hex: IR 2 Hex: LR 3 Hex: AR 4 Hex: EM
m+3	00 to 15			First word address in the Customizable Counter Unit	0000 to the highest address in the area specified above (BCD)
m+4	00 to 11		Input refresh (for input from the Customizable Counter Unit to the CPU Unit)	Number of words transferred from the Customizable Counter Unit to the CPU Unit	0001 to 0090 (BCD): 1 to 90 words **Note:** There are various restrictions on the transfer of data. For example, the total number words transferred at input and output refresh must not exceed 90 words. (See note.)
	12 to 15			Area in the Customizable Counter Unit	0 Hex: DM 1 Hex: IR 2 Hex: LR 3 Hex: AR 4 Hex: EM
m+5	00 to 15			First word address in the Customizable Counter Unit	0000 to the highest address in the area specified above (BCD)
m+6	00 to 03	Communications settings for peripheral port			0 Hex: Communications settings are determined by the settings in DM 6651 of the Unit Setup Area. 1 Hex: Standard settings (baud rate: 9,600 bps; data length: 7 bits; 1 start bit; 2 stop bits; even parity). The Unit Setup (DM 6650 and DM 6651) is invalid.
	04 to 15	(Reserved by system.)			---
m+7	00 to 15	(Reserved by system.)			---
m+8	00 to 15	(Reserved by system.)			---
m+9	00 to 15	(Reserved by system.)			---

Note In the following circumstances, an error for the initial setting data transferred from the CPU Unit's words allocated in DM Area occurs, and SR 24903 turns ON.

- The total number of input and output transfer words exceeds 90.
- The offset value of the first word address + the number of transfer words exceeds 100. (The range of the words allocated in DM Area is exceeded.)
- An address that does not exist in the Customizable Counter Unit is specified.
- The first word address + the number of transfer words exceeds the range of the memory area in the Customizable Counter Unit.
- One of the following settings, which exceed the setting range, has been made.
  - The first word address for the words allocated in DM Area is set to a value between 01 and 09.
  - The number of transfer words is set to 91 or higher.
  - The area is set to a value outside the range 0 to 4 Hex.
  - A hexadecimal value that does not conform to BCD format (i.e., A to F) is set.

No errors occur in the following circumstances.

- The input and output words overlap.
- The words (in the CPU Unit) that exchange data with the LR Area and the words that exchange data with the DM Area overlap.

There is an order for exchanging data using the LR and DM Areas. When words (in the CPU Unit) overlap, it is the contents of the data sent later that remain effective. The order is as follows:

1,2,3...

1. Outputs to the DM Area
2. Inputs from the DM Area
3. Outputs to the LR Area
4. Inputs from the LR Area

General-purpose I/O Words (m+10 to m+99)

Word addresses	Bits	Contents
m+10 to m+99	00 to 15	Words for exchanging general-purpose I/O with user-set words in the Customizable Counter Unit.

4-3-3 Example Allocations

An example of a possible configuration for exchanging data using the words allocated in DM Area is shown below. In this example, the unit number = 0 and the first word in the words allocated in DM Area (m) is D20000.

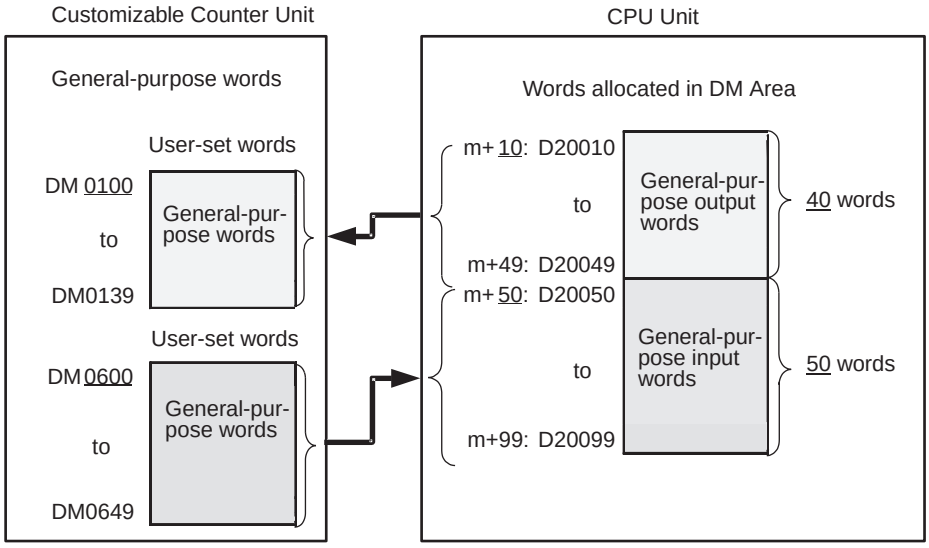

For the configuration shown above, set m+1 to m+5 of the words allocated in DM Area as shown below.

Initial Setting Area

Bit	15	12	08	07	00	
m+1: D20001	5	0	1	0		Sets 50 and 10 (offset values) as the first word addresses of the input and output area in the words allocated in DM Area.
m+2: D20002	0	0	4	0		Sets the DM Area (0 Hex) as the area and 40 words as the number of the output area in the Customizable Counter Unit.
m+3: D20003	0	1	0	0		Sets the first word address of the output area in the Customizable Counter Unit to 100 (BCD).
m+4: D20004	0	0	5	0		Sets the DM Area (0 Hex) as the area and 50 words as the number of the input area in the Customizable Counter Unit.
m+5: D20005	0	6	0	0		Sets the first word address of the input area in the Customizable Counter Unit to 600 (BCD).

4-4 LR Area

4-4-1 Data Exchange Using the LR Area

An example of a possible configuration for exchanging data using the LR Area is shown below.

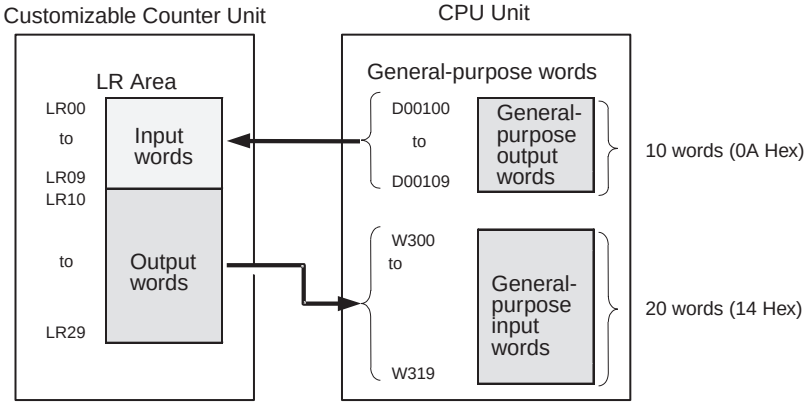

The configuration for exchanging data using the LR Area is set in the Unit Setup Area as shown below.

4-4-2 Unit Setup Area

Bit	15 … 08	07 … 00
DM6601	Area for input words in the CPU Unit	Number of input words (BCD)
DM6602	Area for output words in the CPU Unit	Number of output words (BCD)
DM6603	First word address of input words in the CPU Unit (BCD)	
DM6604	First word address of output words in the CPU Unit (BCD)	

Settings

Function	Address	Bit	Contents	
Input refresh (for input from the CPU Unit to the Customizable Counter Unit)	DM 6601	00 to 07	Number of refresh words	00 (BCD): Not refreshed 01 to 32 (BCD): 1 to 32 words
		08 to 15	CPU Unit area	00 (BCD): CIO 03 (BCD): HR 01 (BCD): WR 04 (BCD): DM 02 (BCD): AR 05 (BCD): EM
Output refresh (for output from the Customizable Counter Unit to the CPU Unit)	DM 6602	00 to 07	Number of refresh words	00 (BCD): Not refreshed 01 to 32 (BCD): 1 to 32 words
		08 to 15	CPU Unit area	00 (BCD): CIO 03 (BCD): HR 01 (BCD): WR 04 (BCD): DM 02 (BCD): AR 05 (BCD): EM
Input refresh	DM 6603	00 to 15	First word address of CPU Unit area	0000 to 9999 (BCD): 0 to 9999
Output refresh	DM 6604	00 to 15	First word address of CPU Unit area	0000 to 9999 (BCD): 0 to 9999

4-4-3 Example

For the configuration shown previously, set the Unit Setup Area as shown below.

Bit	15 … 08	07 … 00	
DM6601	0 4	1 0	Sets the area for the input words in the CPU Unit to DM Area (04 BCD), and sets its size to 10 words (BCD).
DM6602	0 1	2 0	Sets the area for the output words in the CPU Unit to WR Area (01 BCD), and sets its size to 20 words (BCD).
DM6603	0 1	0 0	Sets the first word address for input words in the CPU Unit to 0100 (BCD).
DM6604	0 3	0 0	Sets the first word address for output words in the CPU Unit to 300 (BCD).

4-5 Difference between I/O Refreshing in Customizable Counter Units and That in Other Special I/O Units

The following describes the difference between I/O refreshing in Customizable Counter Units and that in other Special I/O Units. Please note that the time it takes to update data on both sides when a CPU Unit shares data with a Customizable Counter Unit will significantly affect system operation.

Exchanging Data between a Customizable Counter Unit and the CPU Unit

A CS1W-H□□□□ Customizable Counter Unit exchanges data with the CS-series CPU Unit in an asynchronous system using I/O refreshing timing on both sides. (See Figure 1.)

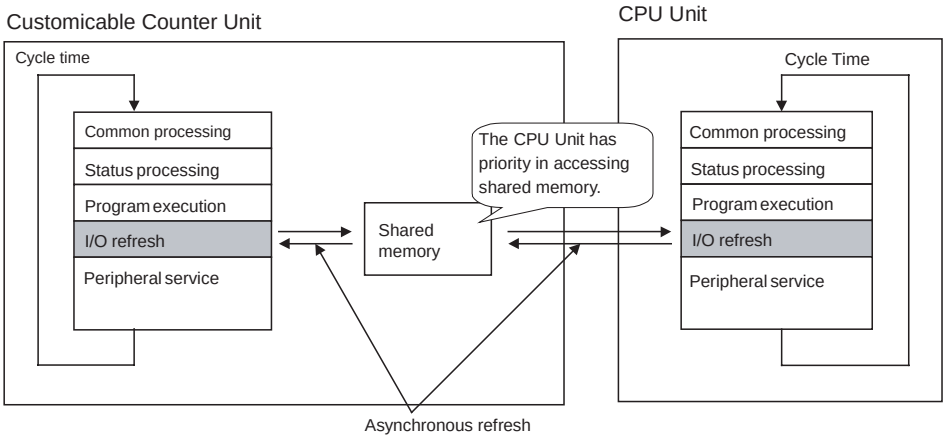

Figure 1

- The Customizable Counter Unit refreshes its own I/O by reading the shared memory inside it.
- The CPU Unit, on the other hand, refreshes its own I/O by reading the shared memory in the Customizable Counter Unit.

This allows the Customizable Counter Unit and the CPU Unit to exchange data (I/O refreshing). The CPU Unit, however, always has priority in accessing the shared memory in the Customizable Counter Unit.

If the I/O refresh timing in the Customizable Counter Unit and the CPU Unit synchronizes by chance, then the Customizable Counter Unit will not refresh its data because the CPU Unit has priority in accessing the shared memory. This means that the Customizable Counter Unit may not be refreshed for several cycles.

Problem

The following problem may occur.

■ When the Same Constant Cycle Time Is Set for Both the CPU Unit and the Customizable Counter Unit

When the constant cycle time function is used to set the same cycle time interval for the CPU Unit and the Customizable Counter Unit, the I/O refresh rate for both will overlap in consecutive cycles if the cycles ever become synchronized. This means that the Customizable Counter Unit may not refresh the I/O for several cycles. (See Figure 2.)

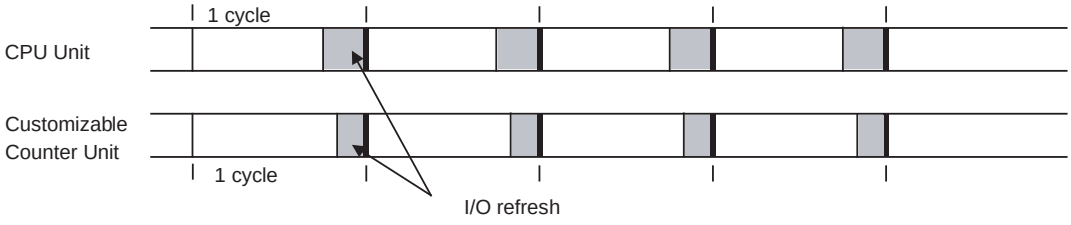

Figure 2

Note Even if the same interval is set using the constant cycle time function, synchronization actually will not last long even when it does occur because the intervals are not that precise. This means that a period of overlap will be followed by a period of non-overlap.

■ Other Cases

The I/O refresh timing on both sides may or may not overlap consecutively under certain conditions in items (1) to (3) below.

1. When the cycle times of both the CPU Unit and the Customizable Counter Unit are constantly changing.
2. When the cycle times of both the CPU Unit and the Customizable Counter Unit are stable yet different.
3. When the constant cycle time function is used to set a different cycle time interval for the CPU Unit and the Customizable Counter Unit.

When the I/O Refresh Timing on Both Sides Overlaps Consecutively:

When the CPU Unit cycle time – the Customizable Counter Unit cycle time < the I/O refresh time of the Customizable Counter Unit in the CPU Unit

When the I/O Refresh Timing on Both Sides Will Not Overlap Consecutively:

When the CPU Unit cycle time – the Customizable Counter Unit cycle time > the I/O refresh time for the Customizable Counter Unit in the CPU Unit

Even if the I/O refresh timing on both sides overlaps momentarily, it will not overlap in the next cycle in these cases. This means that the I/O can be refreshed (data exchanged) within the maximum output response time (2 cycles) of the PLC. (See Figure 3.)

Note The I/O refresh time for the Customizable Counter Unit under the CPU Unit is equivalent to the time it takes the CPU Unit to access the shared memory.

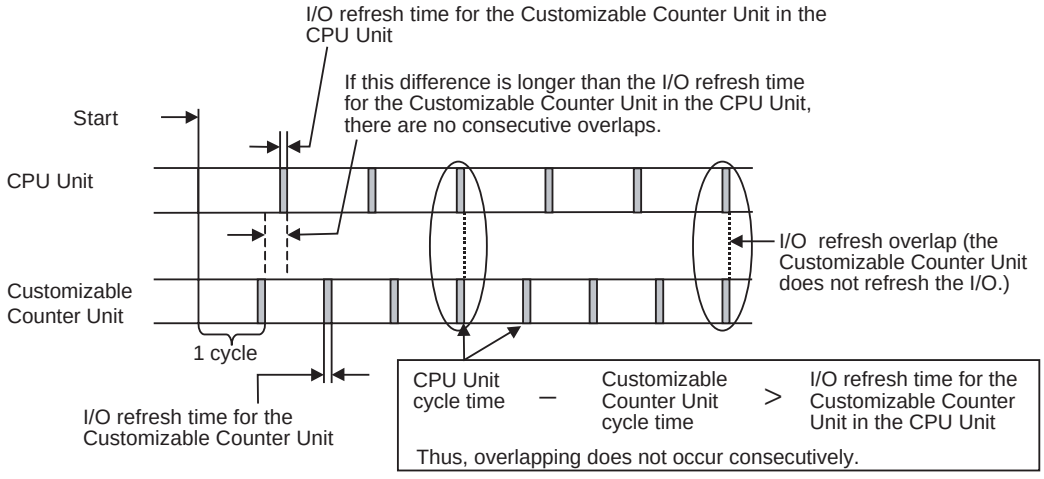

Figure 3

Preventing the Customizable Counter Unit from Missing Consecutive I/O Refreshes

■ When the Cycle Time of the CPU Unit Can Be Changed

Use the constant cycle time function on the CPU Unit to change the cycle time of the Unit so it is longer than the sum total of the cycle time for the Customizable Counter Unit and the I/O refresh time of the CPU Unit as expressed by the formula below.

CPU Unit cycle	>	Customizable Counter Unit cycle time	+	CPU Unit I/O refresh time

■ When the Cycle Time of the CPU Unit Cannot Be Changed

If the cycle time for the CPU Unit cannot be changed because of the effect the change would have on system performance, then perform steps (1) and (2) below.

1,2,3...

1. Use the PLC Setup in the CPU Unit to disable cyclic refresh for the Special I/O Unit number corresponding to the Customizable Counter Unit.
2. Use a timer or some other means to execute the IORF instruction in the ladder program in the CPU Unit at a time interval longer than the cycle time of the Customizable Counter Unit. Be sure to refresh the I/O in shared memory in the Customizable Counter Unit as needed.

   Note For customers using -V1 lot No. 0302 or later products
   Use the I/O Refresh Monitor Error Flag (CIO 23513 in the Customizable Counter Unit, bit 13 word n+5 in the CPU Unit) to verify whether the Customizable Counter Unit has performed consecutive I/O refreshes.

	Customizable Counter Unit	CPU Unit
I/O Refresh Monitor Error Flag:	CIO 235 bit 13	bit 13 in word n+5

This flag turns ON when the number of consecutive I/O refreshes missed in shared memory by I/O refreshing the Customizable Counter Unit exceeds a preset monitored count.

The monitored count can be set to any number in bits 08 to 15 in word m+6 in the initial setting area (word m to m+9) in the DM Area words allocated to the Counter Unit in the CPU Unit (00: 10 times (default), 01 to FF: (1 to 255)).

If a non-fatal error (FAL 99) occurs with the following ladder program for example, check the cycle times and change one or the other so the cycle time of the CPU Unit is longer than the sum total of the cycle time of the Customizable Counter Unit and the I/O refresh time of the CPU Unit.

Example: Customizable Counter Unit

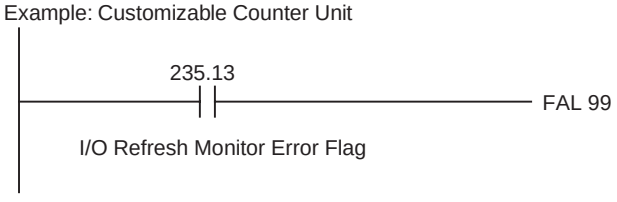

This flag turns OFF when the Customizable Counter Unit enters RUN mode, and turns ON as soon as the number of missed I/O refreshes exceeds the preset monitored count.

Reference: The Customizable Counter Unit refreshes I/O by performing a handshake with the CPU Unit at any time (with -V1 lot No. 0302 or later Units only)

The Customizable Counter Unit can refresh the I/O by performing a handshake with the CPU Unit at any time. Execute the IORF instruction (with operands set to 002 and 002) in the Customizable Counter Unit to refresh the I/O data in its shared memory. At the same time, start an interrupt task in the CPU Unit so the IORF instruction can be executed on the shared memory in the Customizable Counter Unit from within the interrupt task.

Example:
In a ladder program in the Customizable Counter Unit

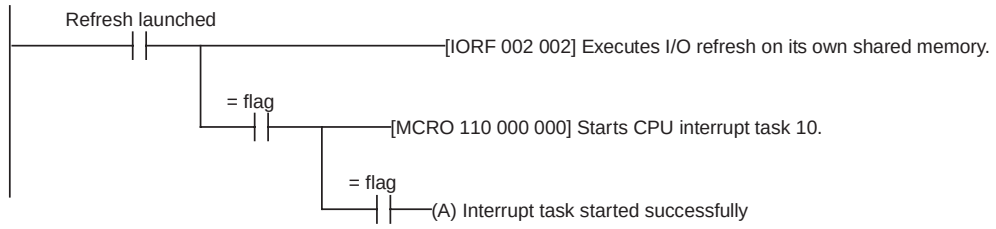

In interrupt task No. 10 in the CPU Unit

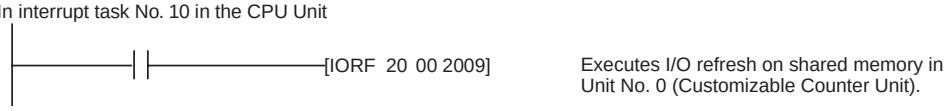

This way, the Customizable Counter Unit can refresh its data in the CPU Unit immediately at any specified time.

SECTION 5
Unit Setup Area

This section provides details on the settings made using the Unit Setup Area in the Customizable Counter Unit.

5-1 Unit Setup Area 78
5-1-1 Overview 78
5-1-2 Details of Overall Unit Settings 79
5-1-3 Details of Special I/O Setup Area 82

5-1 Unit Setup Area

5-1-1 Overview

The Unit Setup Area enables the user to set the functions of the Customizable Counter Unit through initial software settings. Connect a Programming Device to the Unit's peripheral port and make the settings in DM 6600 to DM 6655 of the Unit's DM Area.

Note It is not possible to make the settings for the Unit Setup Area in the Customizable Counter Unit from a CX-Programmer using the PLC Setup functions. Make the settings for in DM 6600 to DM 6655 from the PLC Memory Window on the CX-Programmer.

Unit Setup Area

The Unit Setup Area consists of DM 6600 to DM 6655. These words are divided according to function and enable timing as shown below.

Address	Function	Enable timing	Operation for setting error
DM 6600 to DM 6604	Overall Unit Settings	Enabled at Startup	SR 24900 turns ON.
DM 6605 to DM 6614	Special I/O		
DM 6615 to DM 6629	Overall Unit Settings	Enabled at Startup and when operation starts	SR 24901 turns ON.
DM 6630 to DM 6639	Special I/O		
DM 6640 to DM 6644	Overall Unit Settings		
DM 6645 to DM 6655	Overall Unit Settings	Enabled whenever changed	SR 24902 turns ON.

Default Settings

The default setting (factory setting) for all words in the Unit Setup Area is 0000.

Resetting

All words in the Unit Setup Area can be reset to 0000 by turning ON SR 25210 (Unit Setup Area Reset Bit) using the Programming Device in PROGRAM mode.

Note

1. When the DM Area is cleared by performing the memory clear operation from a Programming Console, the Unit Setup Area is also reset.
2. The Unit Setup Area can also be read from the user program. It cannot, however, be written from the user program. Write to the User Setup Area using a Programming Device.
3. The Unit Setup Area settings are saved in flash memory. Therefore, even if the super-capacitor's saving time elapses, the data will be saved.

5-1-2 Details of Overall Unit Settings

Settings Enabled at Startup

<table>
<tr><th>Address</th><th>Bits</th><th colspan="3">Function</th><th>Contents</th></tr>
<tr><td rowspan="4">DM 6600</td><td>00 to 03</td><td colspan="3">Disable writing to user memory (UM protect)</td><td>0 Hex: Writing enabled
1 Hex: Writing disabled
Note: Set these bits to 1 (Hex) to prohibit writing to the following areas from the Programming Device: User program, read-only portion of the DM Area, Unit Setup Area (except for bits 00 to 03 in DM 6600), and expansion function data.</td></tr>
<tr><td>04 to 07</td><td colspan="3">Switch between English and Japanese for Programming Console messages</td><td>0 Hex: English
1 Hex: Japanese</td></tr>
<tr><td>08 to 11</td><td colspan="3">Enable user settings for expansion instructions</td><td>0 Hex: Default settings
1 Hex: User settings</td></tr>
<tr><td>12 to 15</td><td colspan="3">Holding EM Area</td><td>0 Hex: Clear
1 Hex: Held</td></tr>
<tr><td rowspan="2">DM 6601</td><td>00 to 07</td><td rowspan="6">General-purpose I/O between the LR Area and user-set words in the CPU Unit</td><td rowspan="2">Input refresh (for inputs from the CPU Unit to the Customizable Counter Unit)</td><td>No. of refresh words</td><td>00 (BCD): Not refreshed
01 to 32 (BCD): 1 to 32 words</td></tr>
<tr><td>08 to 15</td><td>CPU Unit area</td><td>00 (BCD): CIO
01 (BCD): WR
02 (BCD): AR
03 (BCD): HR
04 (BCD): DM
05 (BCD): EM</td></tr>
<tr><td rowspan="2">DM 6602</td><td>00 to 07</td><td rowspan="2">Output refresh (for outputs from the Customizable Counter Unit to the CPU Unit)</td><td>No. of refresh words</td><td>00 (BCD): Not refreshed
01 to 32 (BCD): 1 to 32 words</td></tr>
<tr><td>08 to 15</td><td>CPU Unit area</td><td>00 (BCD): CIO
01 (BCD): WR
02 (BCD): AR
03 (BCD): HR
04 (BCD): DM
05 (BCD): EM</td></tr>
<tr><td>DM 6603</td><td>00 to 15</td><td>Input refresh</td><td>First word in CPU Unit area</td><td>0000 to 9999 (BCD): 0 to 9999</td></tr>
<tr><td>DM 6604</td><td>00 to 15</td><td>Output refresh</td><td>First word in CPU Unit area</td><td>0000 to 9999 (BCD): 0 to 9999</td></tr>
<tr><td>DM 6605
to
DM 6614</td><td>00 to 15</td><td colspan="3">Special I/O Setup Area</td><td>---</td></tr>
</table>

Settings Enabled at Startup and when Operation Starts

Address	Bits	Function	Contents	
DM 6615	00 to 15	Enable high-speed execution	Setting other than 5A5A Hex: Normal Execution Mode 5A5A: High-speed Execution Mode	
DM 6616	00 to 15	(Reserved by system.)	---	
DM 6617	00 to 15	Peripheral port servicing time	0000 (BCD): Default (0.2 ms) 0001 to 0500 (BCD): Sets peripheral port servicing time in the range 0.1 to 50.0 ms (0.1-ms units).	
DM 6618	00 to 15	Cycle monitor time	0000 (BCD): Default (50 ms) 0001 to 0100 (BCD): Sets cycle monitor time in the range 1 to 100 ms (in 1-ms units). **Note:** If the cycle monitor time is exceeded, a system error (fatal error; error code: 9F), is generated.	
DM 6619	00 to 15	Constant cycle time	0000 (BCD): Variable cycle time 0001 to 0500 (BCD): Sets a constant cycle time in the range 0.1 to 50.0 ms (in 1-ms units). (Even if all the necessary processing is completed in less than the set time, the next cycle will not start until the constant cycle time setting has elapsed.) **Note:** If the constant cycle time setting is exceeded, SR 24905 turns ON.	
DM 6620	00 to 03	Interrupt input 0 (IR 00000) function	0 Hex: Normal input 1 Hex: Interrupt input for ON 2 Hex: Interrupt input for OFF 3 Hex: Interrupt input for ON and OFF	**Note:** Settings 1 to 3 Hex are valid in both Interrupt Input Mode and Counter Mode.
	04 to 07	Interrupt input 1 (IR 00001) function		
	08 to 11	Interrupt input 2 (IR 00002) function		
	12 to 15	Interrupt input 3 (IR 00003) function		
DM 6621 to DM 6623	00 to 15	(Reserved by system.)	---	
DM6624 (-V1 only)	00 to 15	Ladder library execution mode	Specify either "Boot mode execution" where a ladder library stored in the Flash is opened and executed at starting an operation, or "execution with MCRO instruction" where a ladder library is called by MCRO subroutine and used. Other than 5A5A, A5A5: Ladder library not used 5A5A Hex: Boot mode A5A5 Hex: Execution with MCRO instruction	
DM6625 (-V1 only)	00 to 15	Ladder library ID (4 digits)	0000 to FFFF Hex At creating a ladder library, the ID code of the library is stored in the Flash memory.	
DM6626 (-V1 only)	00 to 15	Ladder library name	Arbitrary 16-digit hexadecimal code (8 characters in ASCII). At creating a ladder library, the name of the library is stored in the Flash memory.	
DM6627 (-V1 only)	00 to 15			
DM6628 (-V1 only)	00 to 15			
DM6629 (-V1 only)	00 to 15			
DM 6630 to DM 6639	00 to 15	Special I/O Setup Area	---	
DM 6640 to DM 6644	00 to 15	(Reserved by system.)	---	

Settings Enabled whenever Changed

Address	Bits	Function	Contents
DM 6650	00 to 03	Communications settings for peripheral port	0 Hex: Standard settings (baud rate: 9,600 bps; data length: 7 bits; 1 start bit; 2 stop bits; even parity). 1 Hex: Communications settings are determined by the setting of DM 6651. If the setting of bits 00 to 03 in word m+6 (Communications Settings for Peripheral Port) of the DM Area memory is 1 Hex (standard settings), the setting of DM 6651 will be ignored. **Note:** The Customizable Counter Unit automatically recognizes the following and switches to the appropriate serial communications mode: • Connection to a Programming Console (Programming Console bus) • Peripheral bus
	04 to 15	(Reserved by system.)	---
DM 6651	00 to 07	Peripheral port baud rate **Note:** This setting is valid when connected to the CX-Programmer via peripheral bus. The baud rate setting must agree with the baud rate set for the CX-Programmer.	00 Hex: 1,200 bps 01 Hex: 2,400 bps 02 Hex: 4,800 bps 03 Hex: 9,600 bps 04 Hex: 19,200 bps
	08 to 15	(Reserved by system.)	---
DM 6652 to DM 6654	00 to 15	(Reserved by system.)	---
DM 6655	00 to 03	Error log storage method	0 Hex: Shift (The oldest entries are deleted.) 1 Hex: Don't shift (New errors are ignored.)
	04 to 07	(Reserved by system.)	---
	08 to 11	Cycle time exceeded (10 ms) detection	0 Hex: Detected 1 Hex: Not detected **Note:** If detection is enabled, when a cycle time overrun is detected, bit SR 23509 turns ON.
	12 to 15	(Reserved by system.)	---

5-1-3 Details of Special I/O Setup Area

Settings for Pulse Inputs (Enabled at Startup; CS1W-HCP22-V1/HCA22-V1/HCA12-V1 Only)

Address	Bits	Function		Details
DM 6605	00 to 03	High-speed counter 1	Pulse input mode	0 Hex: Differential-phase input x1 1 Hex: Differential-phase input x2 2 Hex: Differential-phase input x4 3 Hex: Increment/decrement pulse input 4 Hex: Pulse + direction
	04 to 07		Counter reset method	0 Hex: Software reset 1 Hex: Phase Z + software reset
	08 to 11		Input pulse frequency	0 Hex: 50 kHz 1 Hex: 200 kHz
	12 to 15		Counting mode	0 Hex: Linear counter 1 Hex: Ring counter The followings are available only on HCA12-V1: 2 Hex: ABS linear (CW–) 3 Hex: ABS ring 4 Hex: ABS linear (CW+)
DM 6606	00 to 03		Measurement mode specification	0 Hex: No measurement 1 Hex: High-speed counter rate of change (measurement mode 1) 2 Hex: Frequency measurement (measurement mode 2) **Note:** Frequency measurement is only possible with counter 1.
	04 to 07		PV of high-speed counter operation at startup	0 Hex: Cleared (The high-speed counter PV is cleared to 0 at startup or when the Unit is restart.) 1 Hex: Held (The value of the high-speed counter that was saved at power interruption is preset at startup or when the Unit is restart.) **Note:** The timing of power interruption for the encoder must be considered when using the present high-speed counter value saved using this setting.
	08 to 15		Sampling time for high-speed counter rate-of-change measurement (for measurement mode 1)	Used to set the sampling time for high-speed counter rate-of-change measurement (measurement mode). 00: Scan time 01 to 99 (BCD): 1 to 99 ms (1-ms units) **Note:** This setting is valid when the Measurement Mode Specification (bits 00 to 03 in DM 6606) is set to 1 Hex.
DM 6607	00 to 03	High-speed counter 2 **Note:** Only HCP22-V1 and HCA22-V1	Pulse input mode	Same as for high-speed counter 1. **Note:** Frequency measurement is not possible with high-speed counter 2.
	04 to 07		Counter reset method	
	08 to 11		Input pulse frequency	
	12 to 15		Counting mode	
DM 6608	00 to 03		Measurement mode specification	
	04 to 07		PV of high-speed counter held/cleared at Startup	
	08 to 15		Sampling time for high-speed counter rate of change measurement (for measurement mode 1)	
DM 6609	00 to 15	Maximum ring counter value for high-speed counter 1	Rightmost 4 digits	Used to set the maximum ring counter value when the counting mode is set to ring counter (bits 12 to 15 in DM 6605). Range: 0000 0001 to FFFF FFFF Hex
DM 6610	00 to 15		Leftmost 4 digits	

Address	Bits	Function		Details
DM 6609	00 to 15	ABS resolution (the No. of input pulses for encoder's 1 revolution) **Note:** HCA12-V1 Only	Rightmost 4 digits	0000 0001 to 0000 8000 Hex **Note:** Set the resolution considering servo driver's "encoder dividing rate" and unit's "pulse input multiplication setting". Ex: “Driver: 1000, unit: with multiplication of 4”: FA0 (4000)
DM 6610	00 to 15		Leftmost 4 digits	
DM 6611	00 to 15	Maximum ring counter value for high-speed counter 2 **Note:** HCP22-V1/HCA22-V1 Only	Rightmost 4 digits	As above.
DM 6612	00 to 15		Leftmost 4 digits	
DM6645	00 to 15	ABS offset value **Note:** HCA12-V1 only	Rightmost 4 digits	80000000 to 7FFFFFFFHex This is the application origin when using an absolute encoder.
DM6646	00 to 15		Leftmost 4 digits	

Settings for Pulse Outputs (CS1W-HCP22-V1 Only)

Settings Enabled at Startup

Address	Bits	Function	Details	
DM 6613	00 to 07	Pulse output 1 operation mode	00 Hex: Relative pulse output (No. of output pulses = pulse output value) 01 Hex: Linear-mode absolute pulse output (No. of output pulses = |PV of pulse output – target pulse amount)| 02 Hex: Ring-mode absolute pulse output (As above. If the ring set value is exceeded, the count value returns to 0000 0000 Hex.) 03 Hex: Electronic cam mode (Linear) (output with absolute position specification) 04 Hex: One-shot pulse output 05 Hex: Output pulse counter timer 06 Hex: Electronic cam mode (Ring) (output with absolute position specification) (-V1 only)	
	08 to 15	Pulse output 1 clock frequency	00 Hex: 25 MHz 01 Hex: 6.25 MHz (25/4) 02 Hex: 1.5625 MHz (25/16) 03 Hex: 390.625 kHz (25/64)	Pulse output frequency ranges: 00 Hex: 400 Hz to 200 kHz 01 Hex: 100 Hz to 100 kHz 02 Hex: 25 Hz to 50 kHz 03 Hex: 6 Hz to 20 kHz
DM 6614	00 to 07	Pulse output 2 operation mode	Same as for pulse output 1.	
	08 to 15	Pulse output 2 clock frequency		

Settings Enabled at Startup and when Operation Starts

Address	Bits	Function	Details	
DM 6630	00 to 15	Ring set value for pulse output counter 1	Rightmost 4 digits	Used to set the maximum ring value when the pulse output 1 operation mode is set to Ring Mode for absolute pulse output (Set 02 Hex to DM 6613 bit 00 to 07), or electric cam mode (Ring) (Set 06 Hex to DM 6613 bit00 to 07). Range: 0000 0001 to FFFF FFFF Hex (8 digits)
DM 6631	00 to 15		Leftmost 4 digits	

Address	Bits	Function	Details	
DM 6632	00 to 15	Ring set value for pulse output counter 2	Rightmost 4 digits	Same as for ring set value for pulse output counter 1.
DM 6633	00 to 15		Leftmost 4 digits	

Settings for Analog Inputs/Outputs (CS1W-HCA22-V1/HCA12-V1 Only)

Settings Enabled at Startup

Address	Bits	Function	Details	
DM6612	00 to 07	Analog input	Analog input range	00Hex: –10 to +10 V 01Hex: 0 to 10 V 02Hex: 1 to 5 V (4 to 20 mA) 03Hex: 0 to 5 V
DM 6613	00 to 07	Analog output 1	Output signal range	00 Hex: –10 to 10 V 01 Hex: 0 to 10 V 02 Hex: 1 to 5 V 03 Hex: 0 to 5 V 5A Hex: Output disabled (See note.) **Note:** Setting 5A can be used to shorten the I/O refresh time.
	08 to 15		Operation when output turned OFF	00 Hex: Cleared 01 Hex: Held 02 Hex: Peak value
DM 6614	00 to 07	Analog output 2	Output signal range	Same as for analog output 1.
	08 to 15		Operation when output turned OFF	

Settings Enabled at Startup and when Operation Starts

Address	Bits	Function	Details	
DM 6630	00 to 07	For both analog outputs 1 and 2	Analog output refresh method	00 Hex: END refresh (The values stored in AR 14 and AR 15 are output as analog signals after execution of the END instruction.) 01 Hex: Immediate refresh using instructions (Analog signal output with execution of SPED or ACC instruction. Output values are stored in AR 14 and AR 15 for monitoring.)
	08 to 15	Analog inputs	Analog input refresh method	00 Hex: END refresh 01 Hex: Immediate refresh using PRV instruction
DM 6631	00 to 15	For both analog outputs 1 and 2	Adjustment mode password	5A5A Hex: Adjustment mode enabled Setting other than 5A5A: Adjustment mode disabled
DM 6632 to DM 6643	00 to 15	(Reserved by system.)	---	

SECTION 6
I/O Memory

This section provides details of the settings made using the I/O memory areas in the Customizable Counter Unit.

6-1 Overview 86
6-1-1 I/O Memory Areas 86
6-1-2 Hold/Clear for I/O Memory Data. 88
6-2 Details. 89
6-2-1 Input and Output Areas 89
6-2-2 SR Area 89
6-2-3 TR Area 89
6-2-4 AR Area 90
6-2-5 LR Area 90
6-2-6 Timer/Counter Area 91
6-2-7 DM Area 91
6-2-8 EM Area. 92
6-3 SR Area 93
6-4 AR Area 98

6-1 Overview

6-1-1 I/O Memory Areas

Data area	Word addresses	Bit addresses	Size	Function
Input Area	IR 000	IR 00000 to IR 00011	12 bits	Bits in the Input Area are allocated to input terminals. These allocations are fixed and cannot be changed. IR 00000 to IR 00003 can be used either as normal inputs or as interrupt inputs. Interrupt inputs are used in Input Interrupt Mode or Counter Mode.
Output Area	IR 001	IR 00100 to IR 00107	8 bits	Bits in the Output Area are allocated to output terminals. These allocations are fixed and cannot be changed. IR 00108 to IR 00115 can also be used as work bits in programming.
Work Area	IR 002 to IR 049	IR 00200 to IR 04915	1,088 bits	Work bits do not have any specific function, and they can be freely used within the program.
	IR 200 to IR 219	IR 20000 to IR 21915		
SR Area	SR 220 to SR 255	SR 22000 to SR 25507	568 bits	These bits serve specific functions such as flags and control bits. SR 230 to SR 239 are used to exchange general-purpose data with the memory in the CPU Unit's CIO Area allocated to the Customizable Counter Unit.
AR Area	AR 00 to AR 27	AR 0000 to AR 2715	448 bits	These bits serve specific functions such as flags and control bits.
TR Area	---	TR 0 to TR 7	8 bits	These bits are used to temporarily store ON/OFF status at program branches.
LR Area	LR 00 to LR 31	LR 0000 to LR 3115	256 bits	These bits are used to exchange general-purpose data with the CPU Unit. Cyclic data transfers can be set up with user-set words in the CPU Unit. Up to 32 I/O words of data can be exchanged. The LR Area allocations are set in DM 6601 to DM 6604 of the Unit Setup Area in the Customizable Counter Unit.
Timer/Counter Area	TIM/CNT 000 to TIM/CNT 255 (timer/counter numbers)		256 bits	The timer numbers in the Timer/Counter Area are allocated to create timers and counters. The same numbers are used for both timers and counters.
Read/Write portion of DM Area	DM 0000 to DM 6143	(Designation not possible in bit units.)	6,144 words	DM Area data can be read and written using instructions or the Programming Device in word units only. Word values are retained when power is turned OFF or when the operating mode is switched. The contents of the DM Area can be backed up in flash memory by turning ON a control bit (SR 25200). Data can be read from flash memory using XFER(70).
EM Area	EM 0000 to EM 2047	(Designation not possible in bit units.)	2,048 words	EM area data can be read and written using instructions or the Programming Device in word units only. It is possible to set whether or not word values are retained when power is turned OFF or when the operating mode is switched.

Other Areas

The following words in the DM Area cannot be used as I/O memory (i.e., they cannot be written to from the ladder program).

Data area	Addresses	Size	Function
DM Area	DM 6144 to DM 6199	56 words	Error Log Area
	DM 6200 to DM 6599	400 words	Words in this area are used for general-purpose data. They cannot be written to using instructions. They can be written to only by using a Programming Device. Reading is possible using either instructions or a Programming Device.
	DM 6600 to DM 6655	56 words	Unit Setup Area This area is used to make initial settings for the functions of the Customizable Counter Unit on a software level. When the power is turned OFF or the operating mode is switched, the settings are held. Writing is not possible using instructions. It is possible only by using a Programming Device. Reading is possible using either instructions or a Programming Device.

6-1-2 Hold/Clear for I/O Memory Data

The following table shows when the status of the memory areas is held and when it is cleared.

Name		Addresses	External I/O allocation	Operating mode changed (See note 1.)	Fatal errors		Power supply turned ON
					FALS error	Other fatal errors	
Input Area		IR 000	Yes	Cleared	Held	Cleared	Cleared
Output Area		IR 001	Yes	Cleared	Cleared	Cleared	Cleared
Work Area		IR 002 to IR 049, IR 200 to IR 219	No	Cleared	Held	Cleared	Cleared
SR Area		SR 220 to SR 255	No	(Refer to the individual explanations for the functions.)			
AR Area		AR 00 to AR 27	No	Held or cleared depending on the address.			
LR Area		LR 00 to LR 31	No	Cleared	Held	Cleared	Cleared
Timer Completion Flags		TIM/CNT 000 to TIM/CNT 255	No	Held (See note 1.)	Held	Held	Cleared
Timer PVs		TIM/CNT 000 to TIM/CNT 255	No	Held (See note 2.)	Held	Held	Cleared
Counter Completion Flags		TIM/CNT 000 to TIM/CNT 255	No	Held	Held	Held	Cleared
Counter PVs		TIM/CNT 000 to TIM/CNT 255	No	Held	Held	Held	Held
DM Area	General-purpose read/write words	DM 0000 to DM 6143	No	Held	Held	Held	Held
	General-purpose read-only words	DM 6200 to DM 6599					
	Error Log Area	DM 6144 to DM 6199					
	Unit Setup Area	DM 6600 to DM 6655					
EM Area		EM 0000 to EM 2047	No	According to setting. (See note 3.)	According to setting. (See note 3.)	According to setting. (See note 3.)	According to setting. (See note 3.)

Note

1. “Operating mode changed” means between RUN or MONITOR mode and PROGRAM mode.
2. The status of Timer Completion Flags and Timer PVs is held when the operating mode changes from RUN mode or MONITOR mode to PROGRAM mode, but it is cleared when the operating mode is changed from PROGRAM mode to RUN mode or MONITOR mode.
3. It is possible to set whether data in the EM Area is held or cleared in the Unit Setup Area (bits 12 to 15 in DM 6600).

4. With the Customizable Counter Unit, there is no function (e.g., such as an IOM Hold Bit) for holding the bit status in the cleared areas above when the operating mode is changed or the power supply is turned ON.

6-2 Details

Explanations of the I/O memory areas in the Customizable Counter Unit are given in this section.

6-2-1 Input and Output Areas

The bits in the Input and Output Areas are allocated to the input and output terminals on the Customizable Counter Unit.

Note

1. Inputs bits cannot be used with the OUT, OUT NOT, SET, and RSET instructions.
2. Do not use the same output bit for more than one of the following instructions: OUT, OUT NOT, SET, or RSET instructions. Doing so may result in incorrect execution of the program.

Customizable Counter Unit's Built-in Inputs: 12 Points (IR 000)

Out of the 12 inputs that are built into the Customizable Counter Unit, 4 inputs (IR 00000 to IR 00003) can also be used as interrupt inputs.

Address	Bits	Function
IR 000	00 to 03	These bits can be used as either normal inputs or interrupt inputs (in either Input Interrupt Mode or Counter Mode). (Set in the Unit Setup Area.)
	04 to 11	These bits can be used as normal inputs.
	12 to 15	These bits cannot be used as work bits.

Customizable Counter Unit's Built-in Outputs: 8 Points (IR 001)

Address	Bits	Function
IR 001	00 to 07	These bits are used as normal outputs.
	08 to 15	These bits can be used as work bits.

6-2-2 SR Area

SR bits are used for specific functions related to general operation of the Customizable Counter Unit. For details on the functions of individual bits, refer to *6-3 SR Area*.

6-2-3 TR Area

TR bits temporarily store the ON/OFF status of branch points of instruction blocks. They are useful when programming in mnemonic code if there are output branches in the program that cannot be input without storing the execution conditions. When programming is performed using a ladder diagram, processing is performed internally and so no consideration of TR bits is required.

The same TR bit cannot be used more than once in the same instruction block. They can, however, be used as many times as required in different instruction blocks. The ON/OFF status of TR bits cannot be monitored from a Programming Device.

6-2-4 AR Area

AR bits are used for specific functions related to the operation of the Customizable Counter Unit's special I/O. For details on the functions of individual bits, refer to *6-4 AR Area.*

6-2-5 LR Area

This area can be used for data exchange with user-set words (in the CIO, WR, AR, HR, DM, or EM Area) in the CPU Unit.

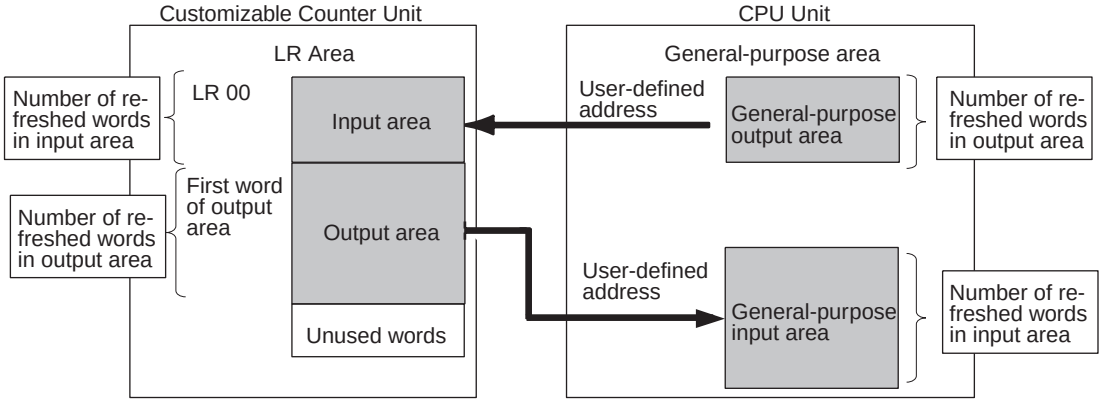

The words used in the CPU Unit are set in the Unit Setup Area (DM 6601 to DM 6604) as shown below. The input and output areas in the LR Area are allocated in the order input area → output area starting from the first word of the LR Area. The number of words in the areas are determined by the refresh settings.

General-purpose I/O is exchanged between the LR Area and the user-set words in the CPU Unit, as shown in the following table.

Address	Bits	Function		Contents
DM 6601	00 to 07	Input area (input from the CPU Unit to the Customizable Counter Unit)	Number of refreshed words	00 (BCD): Not refreshed 01 to 32 (BCD): 1 to 32 words
	08 to 15		CPU Unit area	00 (BCD): CIO 01 (BCD): WR 02 (BCD): AR 03 (BCD): HR 04 (BCD): DM 05 (BCD): EM
DM 6602	00 to 07	Output area (output from the Customizable Counter Unit to the CPU Unit)	Number of refreshed words	00 (BCD): Not refreshed 01 to 32 (BCD): 1 to 32 words
	08 to 15		CPU Unit area	00 (BCD): CIO 01 (BCD): WR 02 (BCD): AR 03 (BCD): HR 04 (BCD): DM 05 (BCD): EM
DM 6603	00 to 15	Input area	First word in CPU Unit area	0000 to 9999 (BCD)
DM 6604	00 to 15	Output area	First word in CPU Unit area	0000 to 9999 (BCD)

Note When LR Area bits are not being used for the above functions, they can be used as work bits.

6-2-6 Timer/Counter Area

This area is used to manage the TIM, TIMH(15), TMHH(—), CNT, and CNTR(12) instructions. The same numbers are used for timers and counters; do not use the same number twice even for different instructions.

If TIM/CNT number is designated for word data, it will access the present value (PV); if it is used for bit data, it will access the Completion Flag for the timer/counter.

The Completion Flag turns ON when the PV of the timer/counter that is being used goes to 0.

Interrupt processing is not performed for TIMH(15), i.e., timing processing is performed only when the instructions is executed. If the cycle time is longer than 10 ms, counting may not be reliable.

For details on using these instructions, refer to the individual explanations in the *Customizable Counter Units Programming Manual* (W384).

6-2-7 DM Area

This area is used in word units. The DM Area is contained in I/O memory (i.e., areas that can be freely read and written from the ladder program) and areas to which functions are allocated.

Read/Write Words in DM Area

The words in this area do not have any special functions and can be used as required in programming. They can be read and written to using instructions or a Programming Device.

Area type	Addresses	Instructions		Programming Device	
		Reading	Writing	Reading	Writing
Read/write portion of DM Area (for general-purpose data)	DM 0000 to DM 6143	OK	OK	OK	OK

Other Parts of DM Area

Error Log Area

When a fatal or non-fatal error occurs in the Customizable Counter Unit, the Special I/O Unit error code and the error contents are stored automatically in this area along with the time and date at which the error occurred.

Area	Addresses	Instructions		Programming Device	
		Reading	Writing	Reading	Writing
Error Log Area	DM 6144 to DM 6199	OK	NO	OK	OK

The contents of one record are shown below:

15 00	07 00
Special I/O Unit error code	
Details 1	Details 2
Minutes	Seconds
Day	Hours
Year	Month

Error contents: If the Special I/O Unit error code is 0360 Hex, the Customizable Counter Unit's error code is stored in bits 00 to 07.

Read-only Words in DM Area

Reading is possible for these words using instructions, but writing is not possible. Using a Programming Device, both reading and writing are possible. Use this area for storing data that must not be changed.

Area	Addresses	Instructions		Programming Device	
		Reading	Writing	Reading	Writing
Read-only portion of DM Area (for general-purpose data)	DM 6200 to DM 6599	OK	NO	OK	OK (See note.)

Note Writing is not possible when bits 00 to 03 in DM 6600 are set to 1 Hex (writing to user memory disabled).

Unit Setup Area

This area is used for making settings for the Customizable Counter Unit's functions.

Area	Address	Instructions		Programming Device	
		Reading	Writing	Reading	Writing
Unit Setup Area	DM 6600 to DM 6655	OK	NO	OK	OK (See note.)

Note Writing is not possible when bits 00 to 03 in DM 6600 are set to 1 Hex (writing to user memory disabled). (Except for bits 00 to 03 in DM 6600.)

6-2-8 EM Area

This area is used in word units (EM 0000 to EM 2047). The EM Area is contained in I/O memory (i.e., memory that can be freely read and written to from the ladder program). It is possible to specify whether or not EM Area settings are cleared at power interruptions. This setting is made in bits 12 to 15 of DM 6600 in the Unit Setup Area as shown below.

Address	Bits	Function	Contents
DM 6600	12 to 15	Hold function for EM Area (EM 0000 to EM 2047)	0 Hex: Cleared 1 Hex: Held **Note:** Set to 0 Hex to clear the EM Area and subsequently reduce the execution time for instructions that access (i.e., read/write) this area.

6-3 SR Area

In the following table, *Unit* in the *Controlled by* column indicates areas for which only reading is possible using instructions from the ladder program, and *User* indicates areas for which both reading and writing is possible from the ladder program.

<table>
<tr><th>Address</th><th>Bits</th><th colspan="3">Function</th><th>Controlled by</th></tr>
<tr><td rowspan="3">SR 220 to SR 223</td><td>00 to 15</td><td colspan="3" rowspan="3">Library name display
At the rise from 0 to 1 of bit 09 in SR 252, the ladder library name is stored in SR 220 to 223. (Only in Program mode)</td><td rowspan="15">Unit</td></tr>
<tr><td>...</td></tr>
<tr><td>00 to 15</td></tr>
<tr><td rowspan="3">SR 220 to SR 224</td><td>00 to 15</td><td colspan="3" rowspan="3">Arguments for MCRO instruction</td></tr>
<tr><td>...</td></tr>
<tr><td>00 to 15</td></tr>
<tr><td rowspan="3">SR 225 to SR 229</td><td>00 to 15</td><td colspan="3" rowspan="3">Return values for MCRO instruction</td></tr>
<tr><td>...</td></tr>
<tr><td>00 to 15</td></tr>
<tr><td rowspan="7">SR 230</td><td>00</td><td rowspan="2">For exchanging data with words allocated in CPU Unit’s CIO Area (for commands from CPU Unit to Customizable Counter Unit)</td><td>Corresponding word in CIO Area</td><td>Details</td></tr>
<tr><td rowspan="5">n</td><td>Monitors RUN/STOP commands from the CPU Unit
Note: This function is enabled only when bits 00 to 07 in word m allocated in DM Area are set to 00 Hex.</td></tr>
<tr><td>01 to 05</td><td>(Reserved by system.)</td><td>(Reserved by system.)</td></tr>
<tr><td>06</td><td>Back up data write</td><td>ON when the data is backed up to the unit to memory card inserted in CPU unit</td></tr>
<tr><td>07</td><td>Back up data read</td><td>ON when the back up data is read from the memory card inserted in CPU unit</td></tr>
<tr><td>08 to 15</td><td rowspan="4">For exchanging data with words allocated in CPU Unit’s CIO Area (from CPU Unit to Customizable Counter Unit)</td><td rowspan="4">General-purpose input (i.e., from the CPU Unit) area</td></tr>
<tr><td>SR 231</td><td>00 to 15</td><td>n+1</td></tr>
<tr><td>SR 232</td><td>00 to 15</td><td>n+2</td></tr>
<tr><td>SR 233</td><td>00 to 15</td><td>n+3</td></tr>
<tr><td>SR 234</td><td>00 to 15</td><td>n+4</td></tr>
</table>

Address	Bits	Function				Controlled by
SR 235	00 to 07	For exchanging data with words allocated in CPU Unit's CIO Area (from Customizable Counter Unit to CPU Unit)	n+5	00 to 07	Unit error code **Note:** The error codes are also stored in bits 00 to 07 of the error information portion of error logs.	Unit
	08			08	(Reserved by system.)	
	09			09	Unit CYCLE TIME OVER (non-fatal error) OFF: No error (cycle time less than 10 ms) ON: CYCLE TIME OVER error (cycle time more than 10 ms) **Note:** Valid only when the system is set to detect CYCLE TIME OVER (set in DM 6655). When the cycle time is exceeded (more than 10 ms), the Unit error code F8 is stored in SR 23500 to SR 23507.	
	10			10	Non-fatal Unit error (including FAL instruction execution) OFF: No non-fatal error ON: Non-fatal error occurred (e.g., Unit setup error, fatal CPU Unit error)	
	11			11	Unit fatal error (including FALS instruction execution) OFF: None of the errors below have occurred. ON: One of the following fatal errors has occurred: FALS instruction executed; no END instruction; special I/O error, Cycle Monitor Time Exceeded (set in DM 6618 in the Unit Setup Area).	
	12			12	Memory card transfer error 0: No error 1: Transfer error occurred	
	13			13	(Reserved by system.)	---
	14			14	Unit busy OFF: The Unit is not busy. ON: The Unit is busy (i.e., performing initial processing, or transferring data to memory card).	Unit
	15			15	Unit operating status OFF: STOP (PROGRAM mode) ON: RUN (RUN or MONITOR mode) **Note:** When this bit is ON, the OPN indicator on the front of the Unit lights.	
SR 236	00 to 15		n+6		General-purpose input words (i.e., to the CPU Unit)	User
SR 237	00 to 15		n+7			
SR 238	00 to 15		n+8			
SR 239	00 to 15		n+9			

Address	Bits	Function			Controlled by
SR 240	00 to 15	Input Interrupt 0 (IR 00000) Counter Mode SV	Counter SVs when input interrupts are used in Counter Mode (0000 to FFFF Hex). **Note:** When input interrupts are not used in Counter Mode, these bits can be used as work bits.		User
SR 241	00 to 15	Input Interrupt 1 (IR 00001) Counter Mode SV			
SR 242	00 to 15	Input Interrupt 2 (IR 00002) Counter Mode SV			
SR 243	00 to 15	Input Interrupt 3 (IR 00003) Counter Mode SV			
SR 244	00 to 15	Input Interrupt 0 (IR 00000) Counter Mode PV	Counter PVs when input interrupts are used in Counter Mode (0000 to FFFF Hex).		Unit
SR 245	00 to 15	Input Interrupt 1 (IR 00001) Counter Mode PV			
SR 246	00 to 15	Input Interrupt 2 (IR 00002) Counter Mode PV			
SR 247	00 to 15	Input Interrupt 3 (IR 00003) Counter Mode PV			
SR 248	00 to 03	Customizable Counter Unit's unit number	×1 (0 to 9; BCD)	The unit number (00 to 95; BCD) set with the rotary switches on the front of the Unit is stored here.	Unit
	04 to 07		×10 (0 to 9; BCD)		
	08 to 15	(Reserved by system.)			---

Address	Bits	Function			Controlled by
SR 249	00	Turns ON when there is an error in the Unit Setup Area read when the power supply is turned ON (non-fatal error).	DM 6600 to DM 6614	Unit error code 9B (Unit Setup Area error) is stored in SR 23500 to SR 23507.	Unit
	01	Turns ON when there is an error in the Unit Setup Area read when operation starts (non-fatal error).	DM 6615 to DM 6644		
	02	Turns ON when there is an error in the Unit Setup Area read at any time (non-fatal error).	DM 6645 to DM 6655		
	03	Turns ON when there is an error in the initial setting data that is transferred from the CPU Unit's DM Area memory allocations (non-fatal error).	m to m+9 in the DM Area memory allocations		
	04	General-purpose READ/WRITE DM data in Flash memory (DM 0000 to 6143) sum error/ladder library data sum error. Turned ON in the following situations: • At occurrence of general-purpose READ/WRITE DM area in Flash memory sum error. • At ladder library data sum error			Unit
	05	Constant Cycle Time Exceeded Turns ON when the cycle time exceeds the constant cycle time set in the Unit Setup Area (DM 6619).			
	06	User memory capacity exceeded (fatal error)		When any of the errors on the left occurs, a memory error is generated at the Customizable Counter Unit and Unit operation stops. Unit error code F1 is stored in SR 23500 to SR 23507.	
	07	Compile error (unsupported instruction)/unusable instruction in ladder library error. Turned ON in the following situation: • At occurrence of a compile error (unsupported instruction) • At creating a ladder library with programs that contains instructions which cannot be used in libraries			
	08	Turns ON when an address that does not exist in user memory (e.g., the non-existent HR Area is used) is specified (fatal error).			
	09	ON at Flash memory error/Flash memory sum error at transferring data in memory card to Flash Trned ON in the following situations: • At Flash memory error • Flash memory sum error at transferring data in memory card to the Flash. • At sum error of offset/gain adjustment value for analog input and analog output.			
	10	A checksum error has occurred in the general-purpose read-only portion of the DM Area (DM 6200 to DM 6599) (fatal error).			
	11	Turns ON when all of the settings in the Unit Setup Area (DM 6600 to DM 6655) are reset after a checksum error has occurred there (fatal error).			
	12	Turns ON when a checksum error occurs in user memory (program area), or when an attempt to execute an illegal instruction is made (fatal error).			
	13	Turns ON when all of the expansion instruction data is reset after a checksum error has occurred there (fatal error).			
	14	Turns ON when it is impossible to hold data that should be held at power interruptions.			
	15	CPU Unit Error Flag (non-fatal error) Turns ON when any of the following errors occurs: Fatal CPU Unit error (Unit error code: 0A), CPU Unit WDT error (Unit error code: 0B), CPU Unit monitor error (Unit error code: 0C), bus error (Unit error code: 0D)			

Address	Bits	Function		Controlled by
SR 250	00 to 07	(Reserved by system.)		---
	08 to 11	Peripheral port error code	0 Hex: No error 1 Hex: Parity error 2 Hex: Framing error 3 Hex: Overrun error **Note:** When a Programming Device is connected using peripheral bus communications, F Hex is stored here.	Unit
	12	Peripheral Port Communications Error Turns ON when there is a peripheral port communications error.		
	13 to 15	(Reserved by system.)		---
SR 251	00 to 15	(Reserved by system.)		
SR 252	00	DM Area to Flash Memory Transfer Bit Turn ON this bit to save the contents of DM Area words DM 0000 to DM 6143 to flash memory. The bit automatically turns OFF after execution.		User
	01 to 06	(Reserved by system.)		---
	07	CONSTANT CYCLE TIME OVER clear 0 to 1: CONSTANT CYCLE TIME OVER clear		User
	08	Peripheral Port Reset Bit Turn ON this bit to reset the peripheral port. (Invalid if the peripheral port is used for peripheral bus communications.) The bit automatically turns OFF after execution.		User
	09	Library name read Valid only in Program mode. 0: Ladder library name is not stored in SR 220 to 223. 1: Ladder library name is stored in SR 220 to 223.	The settings of these bits are valid only when the Customizable Counter Unit is in PROGRAM mode.	
	10	Unit Setup Area Reset Bit Turn this bit ON to reset the Unit Setup Area (DM 6600 to DM 6655). The bit automatically turns OFF after execution.		
	11 to 13	(Reserved by system.)		
	14	Error Log Reset Bit Turn this bit ON to clear the error log. The bit automatically turns OFF after execution.		
	15	Ladder library set flag Valid only in program mode 0 to 1: Create library **Note:** This is automatically turned to 0 (OFF) after completion of creating the library.		
SR 253	00 to 12	(Reserved by system.)		---
	13	Always ON Flag		Unit
	14	Always OFF Flag		
	15	First Cycle Flag		
SR 254	00	1-minute Clock Pulse (30 seconds ON; 30 seconds OFF)		
	01	0.02-second Clock Pulse (0.01 seconds ON; 0.01 seconds OFF)		
	02	Negative (N) Flag		
	03	(Reserved by system.)		---
	04	Overflow (OF) Flag		Unit
	05	Underflow (UF) Flag		
	06	Differential Monitor Completion Flag Turns ON when differential monitoring has been completed.		
	07	STEP Execution Flag Turns ON for one cycle only at the start of a processed based on STEP.		
	08 to 15	(Reserved by system.)		---

Address	Bits	Function	Controlled by
SR 255	00	0.1-second Clock Pulse (0.05 seconds ON, 0.05 seconds OFF)	Unit
	01	0.2-second Clock Pulse (0.1 seconds ON, 0.1 seconds OFF)	
	02	1.0-second Clock Pulse (0.5 seconds ON, 0.5 seconds OFF)	
	03	Instruction Execution Error (ER) Flag Turns ON when an error occurs during execution of an instruction.	
	04	Carry (CY) Flag Turns ON when there is a carry in the results of an instruction execution.	
	05	Greater Than (GR) Flag Turns ON when the result of a comparison is “greater.”	
	06	Equals (EQ) Flag Turns ON when the result of a comparison is “equal,” or when the result of an instruction execution is 0.	
	07	Less Than (LE) Flag Turns ON when the result of a comparison is “less.”	

6-4 AR Area

In the following table, *Unit* in the *Controlled by* column indicates areas for which only reading is possible using instructions from the ladder program, and *User* indicates areas for which both reading and writing is possible from the ladder program.

All Units (CS1W-HIO01-V1/HCP22-V1/HCA22-V1/HCA12-V1)

Address	Bits	Function	Details	Controlled by	Forced set/ reset
AR 00 to AR 23	---	Special I/O	With the CS1W-HCP22-V1/HCA22-V1 models, this area is used for controlling special I/O. (See below.)	---	Depends on the Unit.
AR 24 to AR 25	---	(Reserved by system.)	---	---	Disabled
AR 26	00 to 15	Maximum Cycle Time	The longest cycle time since the beginning of operation is stored here in 4-digit BCD. (Unit: 0.01 ms) **Note:** The value stored here is cleared at the beginning, not the end, of operation.	Unit	
AR 27	00 to 15	Current Cycle Time	The most recent cycle time during operation is stored here in 4-digit BCD. (Unit: 0.01 ms) **Note:** The value stored here is not cleared when operation stops.		

Pulse Inputs (CS1W-HCP22-V1/HCA22-V1/HCA12-V1 Only)

Address	Bits	Function		Details		Controlled by	Forced set/reset
AR 00	00 to 15	High-speed Counter 1 PV		Rightmost 4 digits	Counter range: 8000 0000 to 7FFF FFFF Hex (8 digits) **Note:** In Linear Counter Mode, high-speed counter PVs are check for overflow and underflow errors when the PVs are read (at internal I/O refresh for the Customizable Counter Unit).	Unit	Disabled
AR 01	00 to 15			Leftmost 4 digits			
AR 02	00 to 15	High-speed Counter 2 PV		Rightmost 4 digits			
AR 03	00 to 15			Leftmost 4 digits			
AR 04 to AR 05	00 to 15	Counting mode • ABS linear (CW–) • ABS ring • ABS linear (CW+)	ABS No. of rotations PV	Rightmost 4 digits	Multi-turn data (PV read from encoder) input to the counter unit is stored here when SEN signal is input to servo driver. 8000 0000 to 7FFF FFFF Hex (8-digit hexadecimal)		
				Leftmost 4 digits			
		Counting mode • Linear counter • Ring counter	High-speed counter monitor data	Rightmost 4 digits	• When monitoring (measurement mode 1) the rate-of-change of high-speed counter, the rate-of-change of high-speed counter PV within the set sampling time is stored with 8-digit hexadecimal. 0000 0000 to 7FFF FFFF Hex • When monitoring (measurement mode 2) high-speed counter frequency, the frequency is calculated based on the PV of high-speed counter for measuring frequency and the result is stored here with 8-digit BCD. 0000 0000 to 0020 0000 (BCD): 0 to 200,000 Hz		
				Leftmost 4 digits			
AR 06 to AR 07	00 to 15	High-speed counter 2 measurement data		Counter rate of change	The same as for high-speed counter 1. (The high-speed counter frequency is not stored. for high-speed counter 1.)		

Address	Bits	Function	Details		Controlled by	Forced set/reset
AR 08	00	High-speed counter 1 status	Target Value Comparison Flag	OFF: In Target Comparison Mode for the CTBL instruction, indicates that comparison is not in progress. **Note:** This flag is always OFF in range comparison mode for the CTBL instruction. ON: In Target Comparison Mode for the CTBL instruction, indicates that comparison is in progress. **Note:** Unlike range comparison, once target value comparison is started, it is continuously executed. This bit can be used to confirm whether or not comparison is actually in progress.	Unit	Enabled
	01		Overflow/ Underflow Flag	OFF: In Linear Counter Mode, there is no overflow or underflow. In Ring Counter Mode, this flag is always 0. ON: In Linear Counter Mode, an overflow or underflow has occurred. The high-speed counter PV is fixed at one of the upper limits. This flag is cleared when the High-speed Counter Start Bit is turned OFF.		
	02		(Reserved by system.)	---		
	03		Phase-Z Input Reset Flag (ON for one cycle)	If the high-speed counter reset method is phase Z + software reset (1 Hex is set in bits 04 to 07 in DM 6605), this flag turns ON for one cycle when the high-speed counter's PV is reset. **Note:** If the phase-Z signal (reset input) turns ON while the High-speed Counter Reset Bit (bit 01 in AR 09) is ON, this flag turns ON for one cycle when the high-speed counter's PV is reset.		
	04	ABS PV read status	ABS No. of rotations read error	0: No error 1: Error occurred		
	05		ABS No. of rotations read completed	0: Not reading or reading 1: Reading completed (This is set at the completion of receiving serial data on No. of rotations.)		

Address	Bits	Function	Details		Controlled by	Forced set/reset
AR 08	06	High-speed counter 1 status	Measuring Flag (measurement modes 1 or 2)	OFF: Measurement for high-speed counter rate of change or frequency measurement is not in progress. ON: Measurement for high-speed counter rate of change or frequency measurement is in progress. After the Measurement Start Bit (bit 02 in AR 09) is turned ON, this flag turns ON when sampling starts (in measurement mode 1) or after 2 ms has elapsed (in measurement mode 2). **Note:** This flag is valid only when the measurement mode set in the Unit Setup Area (DM 6606 and DM 6608) is set to high-speed counter rate of change (measurement mode 1) or frequency measurement (measurement mode 2).	Unit	Enabled
	07		High-speed Counter Operating Flag	OFF: High-speed counter is stopped. ON: High-speed counter is operating.		
	08	High-speed counter 2 status	Target Value Comparison Flag	Same as for high-speed counter 1 status.		
	09		Overflow/ Underflow Flag			
	10		(Reserved by system.)			
	11		Phase-Z Input Reset Flag (ON for one cycle)			
	12 to 13		(Reserved by system.)			
	14		Measuring Flag (measurement modes 1)			
	15		High-speed Counter Operating Flag			

Address	Bits	Function	Details		Controlled by	Forced set/reset
AR 09	00	High-speed counter 1 commands	High-speed Counter Start Bit	OFF: Stops counter operation. The high-speed counter PV is held. ON: Starts counter operation. The high-speed counter PV is not reset.	User	Enabled
	01		High-speed Counter Reset Bit	OFF: If the counter reset method is set to a software reset in the Unit Setup Area (DM 6605 and DM 6607), the high-speed counter PV is not cleared when internal I/O refresh is performed in the Customizable Counter Unit. If the counter reset method is set to a phase Z + software reset, phase-Z input is disabled. ON: If the counter reset method is set to a software reset in the Unit Setup Area (DM 6605 and DM 6607), the high-speed counter PV is cleared when internal I/O refresh is performed in the Customizable Counter Unit. If the counter reset method is set to a phase Z + software reset, phase-Z input is enabled.		
	02		Measurement Start Bit (measurement mode 1 or 2)	OFF: Measurement for high-speed counter rate of change or frequency measurement is disabled. ON: Starts measurement for high-speed counter rate of change or frequency measurement. **Note 1:** Frequency measurement is possible only with counter 1. **Note 2:** This bit is valid only when the measurement mode set in the Unit Setup Area (DM 6606 and DM 6608) is set to high-speed counter rate of change (measurement mode 1) or frequency measurement (measurement mode 2).		
	03		Measurement Direction Specification Bit (measurement mode 2)	Specifies the direction (up or down) of the pulse input for which frequency measurement is performed. OFF: Up ON: Down **Note:** Be sure to set this bit before turning ON the Measurement Start Bit.		
	04		Range Comparison Result Clear Bit	OFF: The instruction execution result (AR 10) or the output bit pattern (AR 11) that is output when the CTBL instruction is executed for a range comparison on the high-speed counter is not cleared. ON: The instruction execution result (AR 10) or the output bit pattern (AR 11) that is output when the CTBL instruction is executed for a range comparison on the high-speed counter is cleared.		

Address	Bits	Function	Details		Controlled by	Forced set/reset
AR 09	05	ABS encoder input commands	ABS offset preset	0: No preset 0 to 1: Offset value obtained from multi-turn data from servo driver and the No. of initial incremental pulses are stored in ABS offset value (DM6645/6646). When defining machine origin, difference between machine and encoder's origins is preset to DM6645/6646 as ABS offset value.	User	Enabled
	06		ABS PV preset	0: ABS PV preset invalid 0 to 1: At this point, "ABS PV" is stored in high-speed counter PV 1 (AR00 to 01).		
	07		ABS No. of rotations read	0: No. of rotations data read from servo driver invalid 1: At the rise, SEN is output to servo, and multi-turn data is received at phase A input.		
	08	High-speed counter 2 commands	High-speed Counter Start Bit	Same as for high-speed counter 1 commands.		
	09		High-speed Counter Reset Bit			
	10		Measurement Start Bit (measurement mode 1)	Same as for high-speed counter 1 commands except that frequency measurement is not possible with counter 2.		
	11		(Reserved by system.)			
	12		Range Comparison Result Clear Bit	Same as for high-speed counter 1 commands.		
	13 to 15	(Reserved by system.)	---	---		
AR 10	00 to 15	High-speed counter 1 monitor data	Range comparison result	The instruction execution result that is output when the CTBL instruction is executed for a range comparison is stored here. Bits 00 to 15: ON for each condition (from 1 to 16) that is satisfied. OFF: Condition not satisfied ON: Condition satisfied	Unit	
AR 11	00 to 15		Output bit pattern	The output bit pattern that is output when the CTBL instruction is executed for a range comparison is stored here. **Note:** When more than one condition is satisfied, the logical OR of all the output patterns that satisfy the conditions is set.		
AR 12	00 to 15	High-speed counter 2 monitor data	Range comparison result	Same as for high-speed counter 1 monitor data.		
AR 13	00 to 15		Output bit pattern			

Pulse Outputs (CS1W-HCP22-V1 Only)

Address	Bits	Function	Details		Controlled by	Forced set/reset
AR 14	00 to 15	Pulse Output 1 PV **Note:** The pulse output 1 PV is stored here when the pulse output 1 operation mode (bits 00 to 07 in DM 6613) is set to 00 Hex (relative pulse output), 01 Hex (absolute pulse output, linear mode), 02 Hex (absolute pulse output, ring mode), or 03 Hex (electronic cam mode).	Rightmost 4 digits	The pulse output PV is stored in 8-digit hexadecimal. Relative: 0000 0000 to FFFF FFFF Hex Absolute linear: 8000 0000 to 7FFF FFFF Hex Absolute ring: 0000 0000 to ring SV	Unit	Disabled
AR 15			Leftmost 4 digits			
AR 14		One-shot Pulse Output 1 Elapsed Time **Note:** The one-shot pulse output 1 elapsed time is stored here when the pulse output 1 operation mode (bits 00 to 07 in DM 6613) is set to 04 Hex (one-shot	Rightmost 4 digits	The elapsed time for one-shot pulse output is stored in 8-digit hexadecimal. 0000 0000 to 0000 270F (Units: Specified with STIM instruction)		
AR 15			Leftmost 4 digits			
AR 14		Pulse Counter Timer PV 1 **Note:** Pulse Counter Timer PV 1 is stored here when the pulse output 1 operation mode (bits 00 to 07 in DM 6613) is set to 05 Hex (pulse counter timer).	Rightmost 4 digits	The pulse counter measurement time is stored in 8-digit hexadecimal. 0000 0000 to FFFF FFFF Hex (Units: Specified with STIM instruction)		
AR 15			Leftmost 4 digits			
AR 16	00 to 15	Pulse Output 2 PV	Rightmost 4 digits	Same as for Pulse Output 1 PV.		
AR 17	00 to 15		Leftmost 4 digits			
AR 16	00 to 15	One-shot Pulse Output 2 Elapsed Time	Rightmost 4 digits	Same as for One-shot Pulse Output 1 Elapsed Time.		
AR 17	00 to 15		Leftmost 4 digits			
AR 16	00 to 15	Pulse Counter Timer PV 2	Rightmost 4 digits	Same as for Pulse Counter Timer PV 1.		
AR 17	00 to 15		Leftmost 4 digits			

Address	Bits	Function	Details		Controlled by	Forced set/reset
AR 18	00	Pulse Output 1 Status	Pulse Output Completed Flag	OFF: Pulse output not completed (stays OFF during pulse output). ON: Pulse output completed (goes ON at completion of pulse output)	Unit	Enabled
	01		Number of Pulses Specified Flag	OFF: Number of pulses has not been set using PULS. ON: Number of pulses has been set using PULS.		
	02		PLS2 Target Frequency Not Reached	OFF: Normal ON: Pulse output has decelerated without reaching the target frequency when PLS2 is executed or during pulse output.		
	03		Target Comparison in Progress	OFF: Stopped ON: In progress		
	04		Independent Pulse Output In Progress	OFF: No output, or continuous output ON: Output in progress		
	05		Positioning In Progress (PLS2)	OFF: Positioning not in progress ON: Positioning in progress		
	06		Accelerating/ Decelerating	OFF: No output, or output at a constant frequency ON: During acceleration or deceleration using ACC or PLS2.		
	07		Pulse Output In Progress	OFF: Pulse output stopped ON: Pulse output in progress		
	08	Pulse Output 2 Status	Pulse Output Completed Flag	Same as for Pulse Output 1 Status.	Unit	Enabled
	09		Number of Pulses Specified Flag			
	10		PLS2 Target Frequency Not Reached			
	11		Target Comparison in Progress			
	12		Independent Pulse Output In Progress			
	13		Positioning In Progress (PLS2)			
	14		Accelerating/ Decelerating			
	15		Pulse Output In Progress			

Address	Bits	Function	Details		Controlled by	Forced set/reset
AR 19	00	Pulse output 1 commands	PV Reset	OFF: Pulse output 1 PV not reset ON: Pulse output 1 PV reset	User	Enabled
	01		Range Comparison Result Clear	OFF: The instruction execution result (AR 20) or the output bit pattern (AR 21) that is output when the CTBL instruction is executed for a range comparison on the pulse output PV is not cleared. ON: The instruction execution result (AR 20) or the output bit pattern (AR 21) that is output when the CTBL instruction is executed for a range comparison on the pulse output PV is cleared.		
	02 to 06		(Reserved by system.)			
	07	Common for both pulse output 1/2	Speed-changing cycle	OFF: Set 2 ms to the speed-changing cycle for acceleration and deceleration of ACC and PLS2 instructions ON: Set 1 ms to the speed-changing cycle for acceleration and deceleration of ACC and PLS2 instructions (HCP22-V1 only)		
	08	Pulse output 2 commands	PV Reset	Same as for pulse output 1 commands.		
	09		Range Comparison Result Clear			
	10 to 13		(Reserved by system.)			
	14	Common for both pulse output 1/2	PLS2 instruction Absolute position mode change (-V1 only)	OFF: Give the priority to Direction designation When the direction of the pulse output is same as the direction of the absolute position, the pluses are output. ON: Give the priority to Absolute position The pulse are output by the direction of the absolute position.		
	15		PLS2 instruction mode change (-V1 only)	OFF: Normal mode (outputs pulse to external device) ON: Virtual pulse output mode (executes virtual pulse output, without actual pulse output to external device)		

Address	Bits	Function	Details		Controlled by	Forced set/reset
AR 20	00 to 15	Pulse output 1 monitor data	Range comparison result	The instruction execution result that is output when the CTBL instruction is executed for a range comparison is stored here. Bits 00 to 15: ON for each condition (from 1 to 16) that is satisfied. OFF: Condition not satisfied ON: Condition satisfied	Unit	Enabled
AR 21	00 to 15		Output bit pattern	The output bit pattern that is output when the CTBL instruction is executed for a range comparison is stored here. **Note:** When more than one condition is satisfied, the logical OR of all the output patterns for satisfied conditions is set.		
AR 22	00 to 15	Pulse output 2 monitor data	Range comparison result	Same as for pulse output 1 monitor data.		
AR 23	00 to 15		Output bit pattern			

Analog Outputs (CS1WHCA22-V1/HCA12-V1 Only)

Address	Bits	Function	Details	Controlled by	Forced set/reset
AR 14	00 to 15	Analog Output 1 Output Value	If END refresh is set as the analog output method, the value set here by the user in 4-digit hexadecimal is output from analog output 1 when analog output is refreshed. If immediate refresh using instructions is set as the analog output method, the value output from analog output port 1 is stored here in 4-digit hexadecimal for monitoring when analog output is refreshed. 0 to 10 V, 0 to 5 V, 1 to 5 V: FF38 to 1068 Hex –10 to 10 V: EA84 to 157C Hex **Note 1:** The analog output method (END refresh or immediate refresh using instructions) is specified in bits 00 to 07 of DM 6630 in the Unit Setup Area (00 Hex: END refreshing). The setting applies to both analog outputs 1 and 2. **Note 2:** The output signal range is specified in DM 6613.	Immediate refresh using instructions: Unit END refresh: User	Enabled
AR 15	00 to 15	Analog Output 2 Output Value	Same as above (except that analog output 2 is used for analog output and the output signal range is set in DM 6614).		

Address	Bits	Function	Details	Controlled by	Forced set/reset
AR 16	00	Analog Output 1 Conversion Enable Bit	ON: D/A conversion enabled (an analog signal is output) OFF: D/A conversion is not performed (analog output is held at the value specified in DM 6613 and DM 6614) **Note:** These bits are cleared when the Customizable Counter Unit's operating mode is switched between RUN or MONITOR mode and PROGRAM mode.	User	Enabled
	01	Analog Output 2 Conversion Enable Bit			
	02 to 15	(Reserved by system.)			
AR 17	00	Analog Output 1 User Adjustment Flag	The default setting is OFF. When offset/gain adjustment is performed by the user, these bits turn ON, and when the adjustment values are cleared and reset to their factory settings these bits return to OFF.	Unit	
	01	Analog Output 2 User Adjustment Flag			
	02 to 03	(Reserved by system.)			
	04	Analog Output 1 Operation In Progress	ON: Analog output is being changed using the ACC instruction. OFF: Analog output has reached the target value.		
	05	Analog Output 2 Operation In Progress			
	06 to 07	(Reserved by system.)			
	08	Analog Output 1 Output SV Error	ON: A value that exceeds the allowable range has been set for analog output SV. OFF: The values set for analog output SV lie within the allowable range. **Note:** This bit is valid only when the analog output method is set to END refresh.		
	09	Analog Output 2 Output SV Error			
	10 to 11	(Reserved by system.)			
	12	Analog Output 1 Factory Setting Adjustment Error	ON: There is an error in the factory-set data stored in FROM. OFF: There are no errors in the factory-set data stored in FROM.		
	13	Analog Output 2 Factory Setting Adjustment Error			
	14	Analog Output 1 User Adjustment Error	ON: There is an error in a user adjustment value stored in FROM. OFF: There are no errors in the user adjustment values stored in FROM.		
	15	Analog Output 2 User Adjustment Error			

Address	Bits	Function	Details	Controlled by	Forced set/reset
AR 18	00	Analog Output 1 Adjustment Enable	ON: Adjustment enabled OFF: Adjustment disabled Enabled in adjustment mode (DM 6631 in Unit Setting Area set to 5A5A Hex).	User	Enabled
	01	Analog Output 2 Adjustment Enable			
	02	Adjusted Mode Adjustment Item	Specifies either the offset value or the gain value as the item to be adjusted. OFF: Offset value ON: Gain value The value specified here can be adjusted with the Adjustment Up Bit or Adjustment Down Bit.		
	03	(Reserved by system.)			
	04	Adjustment Up Bit	While this bit is ON, the offset value or the gain value increases by 1 (resolution) every 0.5 s.		
	05	Adjustment Down Bit	While this bit is ON, the offset value or the gain value decreases by 1 (resolution) every 0.5 s.		
	06	Adjustment Clear (reset to factory settings)	ON: Cleared. OFF: Not cleared. Enabled in adjustment mode (DM 6631 in Unit Setting Area set to 5A5A Hex).		
	07	Adjustment Set	The adjustment value is written when this bit is turned ON after adjusting the value with the Adjustment Up Bit and Adjustment Down Bit.		
	08	Adjustment Command Operation Error	This flag turns ON when an operational error, such as turning ON both the Adjustment Up Bit and the Adjustment Down Bit together, has been made.	Unit	
	09 to 14	(Reserved by system.)			
	15	Adjustment Mode Operation	ON during adjustment mode (DM 6631 in Unit Setting Area set to 5A5A Hex).		
AR 19	00 to 15	Analog Output 1/ Analog Output 2 Setting Offset Monitor	Enabled in adjustment mode (DM 6631 in Unit Setting Area set to 5A5A Hex). It is possible to write gain values and offset values here directly without using the Adjustment Up Bit or Adjustment Down Bit. Offset values: –10 to 10 V: FE0C to 01F4 Hex 0 to 10 V, 0 to 5 V, 1 to 5 V: FF38 to 00C8 Hex Gain values: –10 to 10 V: 1194 to 157C Hex 0 to 10 V, 0 to 5 V, 1 to 5 V: 0ED8 to 1068 Hex	Unit/User	
AR 20	00 to 15	Analog Output 1/ Analog Output 2 Setting Gain Monitor			

Analog Inputs/Pulse Inputs/Analog Outputs (CS1W-HCA12-V1 Only)

Address	Bits	Function		Details		Controlled by	Forced set/reset
AR 00	00 to 15	High-speed Counter 1 PV		Rightmost 4 digits	Counter range: 8000 0000 to 7FFF FFFF Hex (8 digits hexadecimal)	Unit	Disabled
AR 01	00 to 15			Leftmost 4 digits			
AR 02	00 to 15	Analog input value		Analog input	At END refresh or immediate refresh with instructions, the value input to analog input port 1 is stored with the following 4-digit hexadecimal: • With 0 to 10 V: FE70 to 20D0 Hex • With 0 to 5 V, 1 to 5 V: FF38 to 1068 Hex • With –10 to +10 V: DDA0 to 2260 Hex		
AR 03	00	Analog input status		User adjustment	0: No adjustment 1: Adjusted by user		
	01 to 07			(Reserved by system.)			
	08			Default adjustment error	0: No error 1: Error (checked at powering ON)		
	09			User adjustment data error	0: No error 1: Error (checked at powering ON)		
	10 to 15	(Reserved by system.)					
AR 04 to AR 05	00 to 15	Counting mode • ABS linear (CW–) • ABS ring • ABS linear (CW+)	ABS No. of rotations PV	Rightmost 4 digits	Multi-turn data (PV read from encoder) input to the counter unit is stored here when SEN signal is input to servo driver. 8000 0000 to 7FFF FFFF Hex (8-digit hexadecimal)		
				Leftmost 4 digits			
		Counting mode • Linear counter • Ring counter	High-speed counter monitor data	Rightmost 4 digits	• When monitoring (measurement mode 1) the rate-of-change of high-speed counter, the rate-of-change of high-speed counter PV within the set sampling time is stored with 8-digit hexadecimal. 0000 0000 to 7FFF FFFF Hex • When monitoring (measurement mode 2) high-speed counter frequency, the frequency is calculated based on the PV of high-speed counter for measuring frequency and the result is stored here with 8-digit BCD. 0000 0000 to 0020 0000 (BCD): 0 to 200,000 Hz		
				Leftmost 4 digits			
AR 06 to AR 07	00 to 15	(Reserved by system.)					

Address	Bits	Function	Details		Controlled by	Forced set/reset
AR 08	00	High-speed counter 1 status	Target Value Comparison Flag	OFF: In Target Comparison Mode for the CTBL instruction, indicates that comparison is not in progress. **Note:** This flag is always OFF in range comparison mode for the CTBL instruction. ON: In Target Comparison Mode for the CTBL instruction, indicates that comparison is in progress. **Note:** Unlike range comparison, once target value comparison is started, it is continuously executed. This bit can be used to confirm whether or not comparison is actually in progress.	Unit	Enabled
	01		Overflow/ Underflow Flag	OFF: In Linear Counter Mode, there is no overflow or underflow. In Ring Counter Mode, this flag is always 0. ON: In Linear Counter Mode, an overflow or underflow has occurred. The high-speed counter PV is fixed at one of the upper limits. This flag is cleared when the High-speed Counter Start Bit is turned OFF.		
	02		(Reserved by system.)	---		
	03		Phase-Z Input Reset Flag (ON for one cycle)	If the high-speed counter reset method is phase Z + software reset (1 Hex is set in bits 04 to 07 in DM 6605), this flag turns ON for one cycle when the high-speed counter's PV is reset. **Note:** If the phase-Z signal (reset input) turns ON while the High-speed Counter Reset Bit (bit 01 in AR 09) is ON, this flag turns ON for one cycle when the high-speed counter's PV is reset.		
	04	ABS PV read status	ABS No. of rotations read error	0: No error 1: Error occurred		
	05		ABS No. of rotations read completed	0: Not reading or reading 1: Reading completed (This is set at the completion of receiving serial data on No. of rotations.)		

Address	Bits	Function	Details		Controlled by	Forced set/reset
AR 08	06	High-speed counter 1 status	Measuring Flag (measurement modes 1 or 2)	OFF: Measurement for high-speed counter rate of change or frequency measurement is not in progress. ON: Measurement for high-speed counter rate of change or frequency measurement is in progress. After the Measurement Start Bit (bit 02 in AR 09) is turned ON, this flag turns ON when sampling starts (in measurement mode 1) or after 2 ms has elapsed (in measurement mode 2). **Note:** This flag is valid only when the measurement mode set in the Unit Setup Area (DM 6606 and DM 6608) is set to high-speed counter rate of change (measurement mode 1) or frequency measurement (measurement mode 2).	Unit	Enabled
	07		High-speed Counter Operating Flag	OFF: High-speed counter is stopped. ON: High-speed counter is operating.		
	08 to 15	(Reserved by system.)				

Address	Bits	Function	Details		Controlled by	Forced set/reset
AR 09	00	High-speed counter 1 commands	High-speed Counter Start Bit	OFF: Stops counter operation. The high-speed counter PV is held. ON: Starts counter operation. The high-speed counter PV is not reset.	User	Enabled
	01		High-speed Counter Reset Bit	OFF: If the counter reset method is set to a software reset in the Unit Setup Area (DM 6605 and DM 6607), the high-speed counter PV is not cleared when internal I/O refresh is performed in the Customizable Counter Unit. If the counter reset method is set to a phase Z + software reset, phase-Z input is disabled. ON: If the counter reset method is set to a software reset in the Unit Setup Area (DM 6605 and DM 6607), the high-speed counter PV is cleared when internal I/O refresh is performed in the Customizable Counter Unit. If the counter reset method is set to a phase Z + software reset, phase-Z input is enabled.		
	02		Measurement Start Bit (measurement mode 1 or 2)	OFF: Measurement for high-speed counter rate of change or frequency measurement is disabled. ON: Starts measurement for high-speed counter rate of change or frequency measurement. **Note 1:** Frequency measurement is possible only with counter 1. **Note 2:** This bit is valid only when the measurement mode set in the Unit Setup Area (DM 6606 and DM 6608) is set to high-speed counter rate of change (measurement mode 1) or frequency measurement (measurement mode 2).		
	03		Measurement Direction Specification Bit (measurement mode 2)	Specifies the direction (up or down) of the pulse input for which frequency measurement is performed. OFF: Up ON: Down **Note:** Be sure to set this bit before turning ON the Measurement Start Bit.		
	04		Range Comparison Result Clear Bit	OFF: The instruction execution result (AR 10) or the output bit pattern (AR 11) that is output when the CTBL instruction is executed for a range comparison on the high-speed counter is not cleared. ON: The instruction execution result (AR 10) or the output bit pattern (AR 11) that is output when the CTBL instruction is executed for a range comparison on the high-speed counter is cleared.		

Address	Bits	Function	Details		Controlled by	Forced set/reset
AR 09	05	ABS encoder input commands	ABS offset preset	0: No preset 0 to 1: Offset value obtained from multi-turn data from servo driver and the No. of initial incremental pulses are stored in ABS offset value (DM 6645/6646). When defining machine origin, difference between machine and encoder's origins is preset to DM 6645/6646 as ABS offset value.	User	Enabled
	06		ABS PV preset	0: ABS PV preset invalid 0 to 1: At this point, "ABS PV" is stored in high-speed counter PV 1 (AR 00 to 01).		
	07		ABS No. of rotations read	0: No. of rotations data read from servo driver invalid 1: At the rise, SEN is output to servo, and multi-turn data is received at phase A input.		
	08 to 15	(Reserved by system.)				
AR 10	00 to 15	High-speed counter 1 monitor data	Range comparison result	The instruction execution result that is output when the CTBL instruction is executed for a range comparison is stored here. Bits 00 to 15: ON for each condition (from 1 to 16) that is satisfied. OFF: Condition not satisfied ON: Condition satisfied	Unit	
AR 11	00 to 15		Output bit pattern	The output bit pattern that is output when the CTBL instruction is executed for a range comparison is stored here. **Note:** When more than one condition is satisfied, the logical OR of all the output patterns that satisfy the conditions is set.		
AR 12	00 to 15	(Reserved by system.)				
AR 13	00 to 15					
AR 14	00 to 15	Analog Output 1 Output Value	If END refresh is set as the analog output method, the value set here by the user in 4-digit hexadecimal is output from analog output 1 when analog output is refreshed. If immediate refresh using instructions is set as the analog output method, the value output from analog output port 1 is stored here in 4-digit hexadecimal for monitoring when analog output is refreshed. 0 to 10 V, 0 to 5 V, 1 to 5 V: FF38 to 1068 Hex –10 to 10 V: EA84 to 157C Hex **Note 1:** The analog output method (END refresh or immediate refresh using instructions) is specified in bits 00 to 07 of DM 6630 in the Unit Setup Area (00 Hex: END refreshing). The setting applies to both analog outputs 1 and 2. **Note 2:** The output signal range is specified in DM 6613.		Immediate refresh using instructions: Unit END refresh: User	
AR 15	00 to 15	Analog Output 2 Output Value	Same as above (except that analog output 2 is used for analog output and the output signal range is set in DM 6614).			

Address	Bits	Function	Details	Controlled by	Forced set/reset
AR 16	00	Analog Output 1 Conversion Enable Bit	ON: D/A conversion enabled (an analog signal is output) OFF: D/A conversion is not performed (analog output is held at the value specified in DM 6613 and DM 6614) **Note:** These bits are cleared when the Customizable Counter Unit's operating mode is switched between RUN or MONITOR mode and PROGRAM mode.	User	Enabled
	01	Analog Output 2 Conversion Enable Bit			
	02 to 15	(Reserved by system.)		---	---
AR 17	00	Analog Output 1 User Adjustment Flag	The default setting is OFF. When offset/gain adjustment is performed by the user, these bits turn ON, and when the adjustment values are cleared and reset to their factory settings these bits return to OFF.	Unit	Enabled
	01	Analog Output 2 User Adjustment Flag			
	02 to 03	(Reserved by system.)			
	04	Analog Output 1 Operation In Progress	ON: Analog output is being changed using the ACC instruction. OFF: Analog output has reached the target value.		
	05	Analog Output 2 Operation In Progress			
	06 to 07	(Reserved by system.)			
	08	Analog Output 1 Output SV Error	ON: A value that exceeds the allowable range has been set for analog output SV. OFF: The values set for analog output SV lie within the allowable range. **Note:** This bit is valid only when the analog output method is set to END refresh.		
	09	Analog Output 2 Output SV Error			
	10 to 11	(Reserved by system.)			
	12	Analog Output 1 Factory Setting Adjustment Error	ON: There is an error in the factory-set data stored in FROM. OFF: There are no errors in the factory-set data stored in FROM.		
	13	Analog Output 2 Factory Setting Adjustment Error			
	14	Analog Output 1 User Adjustment Error	ON: There is an error in a user adjustment value stored in FROM. OFF: There are no errors in the user adjustment values stored in FROM.		
	15	Analog Output 2 User Adjustment Error			

Address	Bits	Function	Details			Controlled by	Forced set/reset
AR 18	00	Adjustment mode command (valid when DM6631 = 5A5A Hex)	Analog Input/Analog Output 1	Adjustment enable	ON: Adjustment invalid OFF: Adjustment valid At the rise of this bit, an initial value (offset or gain) corresponding to I/O signal ranges is transferred to AR 19/20 (adjustment value monitor bits).	User	Enabled
	01		Analog Output 2				
	02		Analog Input/Analog Output 1/2	Adjustment mode specification	OFF: Offset adjustment ON: Gain adjustment		
	03		Analog Input/Analog Output 1	Adjust object specification	OFF: Analog output ON: Analog input		
	04		Analog Output 1/2	Adjustment up bit	While this bit is ON, the offset value or the gain value increases by 1 (resolution) at every 0.5 s.		
	05		Analog Output 1/2	Adjustment down bit	While this bit is ON, the offset value or the gain value decreases by 1 (resolution) at every 0.5 s.		
	06		Analog Input/Analog Output 1/2	Adjustment value clear (to default data)	OFF to ON: the data is put back to the factory default setting.		
	07		Analog Input/Analog output 1/2	Adjustment value set (registration)	OFF to ON: the value in 16-bit resolution of AR 19/20 (adjustment value monitor bits) is stored in Flash memory. The value is used in the next operation.		
	08		Analog Input/Analog output 1/2	Adjusting operation error	This is turned ON by faulty operations. (Ex: Turning ON both adjustment enable flags for analog input and output at the same time, etc)	Unit	
	09 to 14		(Reserved by system.)				
	15		Analog Input/Analog Output 1/2	Starting adjustment mode	Stays ON in adjustment mode. (when DM6631 = 5A5A Hex)		

Address	Bits	Function	Details			Controlled by	Forced set/reset
AR 19	00 to 15	Adjustment mode command (valid when DM6631 = 5A5A Hex)	Analog Input	Offset value	Under the condition of adjustment enable flag (AR 08 bit 00/03) being ON, analog input offset value can be monitored here. –10 to +10 V: F556 to AAA Hex 0 to 10 V: FAAB to 555 Hex 0 to 5 V: FD56 to 2AA Hex 1 to 5 V: 888 to CCC Hex	Unit	Disabled
AR 20	00 to 15			Gain value	Under the condition of adjustment enable flag (AR 08 bit 00/03, AR 08 bit 02) being ON, analog input gain value can be monitored here. –10 to +10 V: 7554 to 5FFF Hex 0 to 10 V: 6FFF to 6554 Hex 0 to 5 V: 37FF to 32AA Hex 1 to 5 V: 3777 to 3333 Hex		
AR 19	00 to 15		Common for both Analog output 1/2	Setting Offset Monitor	Enabled in adjustment mode (DM 6631 in Unit Setting Area set to 5A5A Hex). It is possible to write gain values and offset values here directly without using the Adjustment Up Bit or Adjustment Down Bit. • Offset values: –10 to 10 V: FE0C to 01F4 Hex 0 to 10 V, 0 to 5 V, 1 to 5 V: FF38 to 00C8 Hex • Gain values: –10 to 10 V:1194 to 157C Hex 0 to 10 V, 0 to 5 V, 1 to 5 V: 0ED8 to 1068 Hex	Unit/User	
AR 20	00 to 15			Setting Gain Monitor			
AR 21	00 to 15	(Reserved by system.)				User	
AR 22	00 to 15						
AR 23	00 to 15	Adjustment mode command (valid when DM 6631 = 5A5A Hex)	Analog Input	Average No. of times in adjustment mode	This indicates the number of times of an average value specified for offset/gain value monitor in adjustment mode. Average No. of times: 0000 to 0040 Hex (0 to 64 times) Set this value before turning ON adjustment enable flag.		

SECTION 7
Special Functions

This section provides information on interrupts, pulse inputs, pulse outputs, and analog outputs.

7-1 Outline 121
7-2 Interrupt Functions 122
7-2-1 Overview 122
7-2-2 Interrupt Priority 122
7-2-3 Disabling and Enabling All Interrupts 123
7-3 Interrupt Inputs 124
7-3-1 Applicable Models 124
7-3-2 Outline 124
7-3-3 Interrupt Modes 124
7-3-4 Interrupt Input Specifications. 124
7-4 Executing Interrupt Tasks in the CPU Unit 125
7-4-1 Applicable Models 125
7-4-2 Outline 125
7-5 Pulse Inputs 126
7-5-1 Applicable Models 126
7-5-2 Outline 126
7-5-3 Specifications 126
7-5-4 Internal Circuit Configurations 129
7-6 Pulse Outputs 130
7-6-1 Applicable Models 130
7-6-2 Outline 130
7-6-3 Specifications 131
7-6-4 Precaution in Using Pulse Outputs. 135
7-6-5 Speed-Changing Cycle Selection of ACC/PLS2 Instructions and Widening of Acceleration/Deceleration Setting Ranges 136
7-6-6 Pulse Output Direction and Absolute Position Designation Priority Modes 136
7-7 Analog Outputs. 138
7-7-1 Applicable Models 138
7-7-2 Outline 138
7-7-3 Specifications 138
7-8 Functions Compatible with Servo Drivers with Absolute Encoders 142
7-8-1 Applicable Models 142
7-8-2 Overview 142
7-8-3 Data Format of Absolute Encoder Output 143
7-8-4 Counting Mode 144

7-8-5 ABS Number of Rotations Present Value (AR 04 to 05) 144
7-8-6 ABS Present Value 145
7-8-7 ABS Present Value Preset 146
7-8-8 ABS Offset Preset 146
7-8-9 Related Areas 147
7-8-10 Overview of Absolute Encoder Output Data Acquire 149
7-8-11 Timing Chart of the Functions Compatible with Servo Drivers with Absolute Encoders 151
7-8-12 Sample Programs (with the Connection to OMRON's W Series Servo Driver) 152
7-9 Analog Input Functions 154
7-9-1 Applicable Models 154
7-9-2 Overview 154
7-9-3 Specification of Analog Input Functions 155
7-9-4 Related Areas 156
7-9-5 Applicable Instructions 158
7-9-6 A/D Conversion Value 158
7-10 Virtual Pulse Output Function (-V1 unit with lot No. 0209__or later only) . . 161
7-10-1 Applicable Models 161
7-10-2 Overview 161
7-10-3 PLS2 Instruction (Use in Virtual Pulse Output Function). 162
7-10-4 Application Example. 164
7-11 Constant Cycle Time Over Clear Function 165
7-11-1 Applicable Models 165
7-11-2 Details 165
7-11-3 Special Auxiliary Bit. 166
7-12 Ladder Library Function 166
7-12-1 Applicable Models 166
7-12-2 Overview 166
7-12-3 Features of the "Ladder Library". 168
7-12-4 Creating a Ladder Library 169
7-12-5 Erasing a Ladder Library. 171
7-12-6 Executing a Ladder Library. 171
7-12-7 Checking the Name of a Ladder Library. 173
7-12-8 Related Areas 174
7-13 Back Up Function 175
7-13-1 Applicable Models 175
7-13-2 Simplified Back Up Function of CPU Unit (Back Up for the Entire System) (CS1-H CPU Unit Only) 175
7-13-3 Back Up of Unit Memory by Bit Manipulation 176
7-14 Improved Instructions 178
7-14-1 MCRO Instruction. 178
7-14-2 APR Instruction. 179
7-14-3 AVG Instruction 182

7-1 Outline

The functions of the Customizable Counter Unit are outlined in the following illustrations.

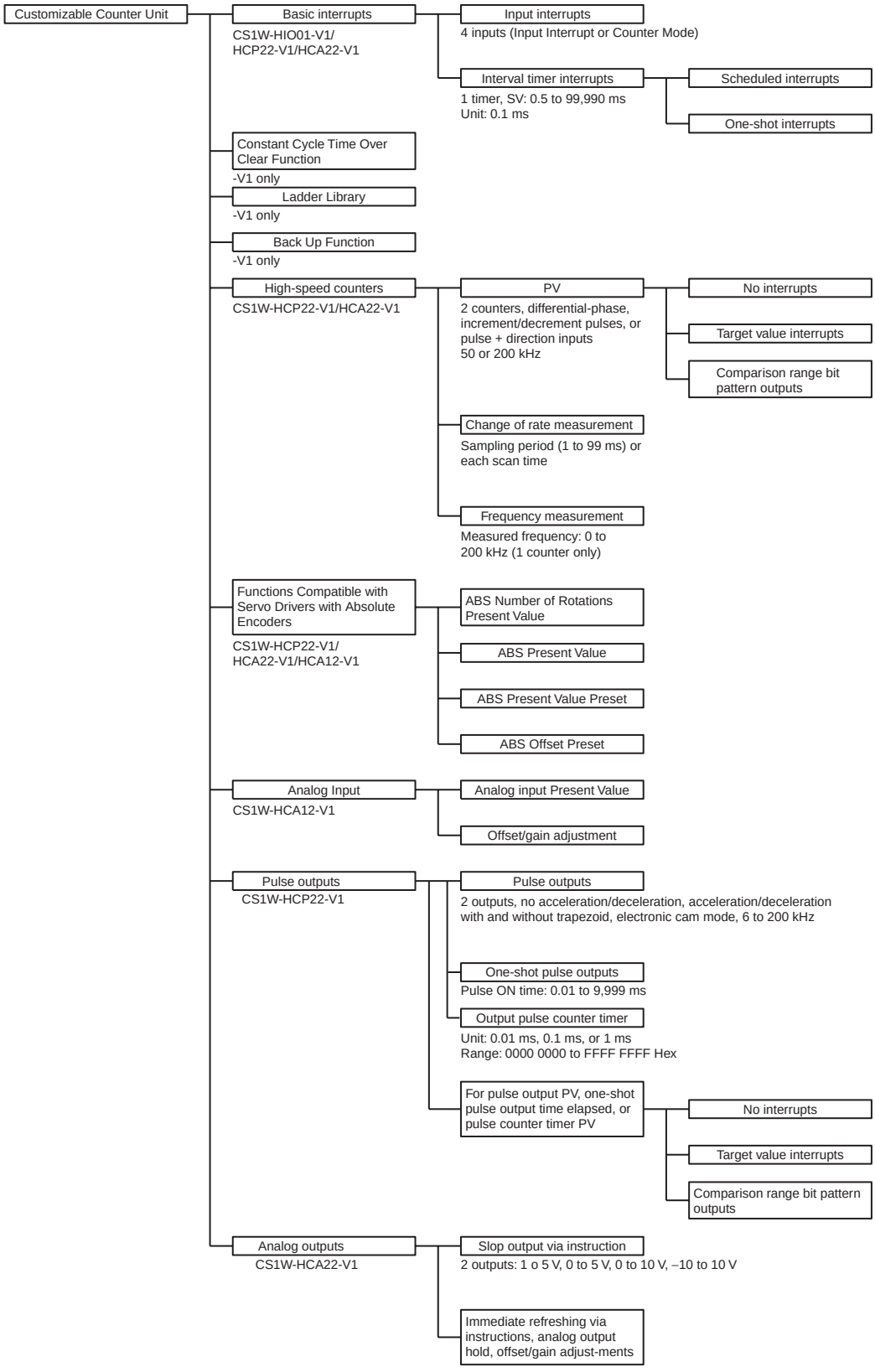

7-2 Interrupt Functions

7-2-1 Overview

The Customizable Counter Unit supports the following interrupts.

Executing Interrupt Programs in the Customizable Counter Unit

The interrupt routines that are executed for all of the following interrupts are programmed as subroutines. Subroutines are defined between SBN(92) and RET(93) following the main program.

Input Interrupts

Contact inputs 0 to 3 to the Customizable Counter Unit can be set as interrupt inputs. If they are set for Input Interrupt Mode, an interrupt will be generated when the input turns ON, OFF, or both. If they are set for Counter Mode, an interrupt will be generated when a specified counter value is reached.

Interval Timer Interrupts

An interrupt will be generated for an interval timer that can be set to a precision of 0.1 ms.

High-speed Counter Interrupts

An interrupt will be generated when the PV of the counter equals a preset target value.

Pulse Output Interrupts

An interrupt will be generated when the PV of the pulse output equals a preset target value.

Note Other than interrupts, bit patterns can also be output internally when the PV is within a specified range in Range Comparison Mode. High-speed counter PVs, pulse output PVs, pulse counter timer PVs, and one-shot pulse elapsed times can be used as the PVs for bit pattern output.

Executing Interrupt Programs in the CPU Unit

The MCRO instruction can be executed in the Customizable Counter Unit to generate an external interrupt to the CPU Unit to execute an external interrupt task.

7-2-2 Interrupt Priority

The specified subroutine will be executed when an interrupt is generated. The priority of interrupts is shown below.

Input interrupts > Interval timer interrupts = Pulse output interrupts = High-speed counter interrupts

If an interrupt with a higher priority occurs when an interrupt is being processed, the current interrupt will be interrupted to execute the higher-priority interrupt. When the subroutine for the higher-priority interrupt has been completed, processing of the previous interrupt will be continued.

If an interrupt with the same or a lower priority occurs when an interrupt is being processed, the current interrupt will be completed and then the new interrupt will be processed.

If interrupts of the same priority occur simultaneously, they will be processed in the following order.

- Input interrupt 0, Input interrupt 1, Input interrupt 2, Input interrupt 3
- Interval timer interrupt, Pulse output 1 interrupt, Pulse output 2 interrupt, High-speed counter 1 interrupt, High-speed counter 2 interrupt

An instruction controlling a port operation cannot be programmed in a subroutine if an instruction in the main program is already controlling pulse I/O or a high-speed counter for the same port. If this is attempted, SR 25503 will turn ON. The following instructions are included: INI, PRV, CTBL, SPED, PULS, PLS2, ACC, and STIM.

The following program sections show how to handle this problem.

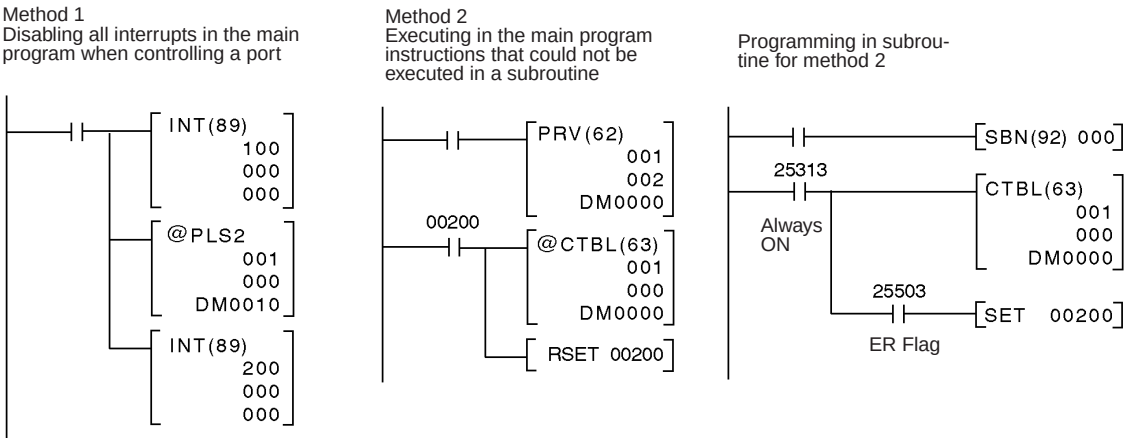

Note

1. Only one interrupt subroutine number is recorded for pulse output or high-speed counter interrupts when another interrupt is being executed or interrupts are disabled. The subroutine number of the most recent interrupt is always recorded. Design the system to allow sufficient time between interrupts for the length of the subroutines to prevent unwanted competition between interrupts.
2. “No SBS” errors will occur when interrupt subroutines are defined, but these will not affect operation.

7-2-3 Disabling and Enabling All Interrupts

All interrupts can be disabled using the INT instruction. The following interrupts are disabled and enabled by INT.

- Input interrupts
- Interval timer interrupts
- High-speed counter interrupts
- Pulse output interrupts

Observe the following precautions when using INT.

- INT cannot be used within a subroutine to disable or enable interrupts.
- Do not use INT to disable all interrupts unless there is a specific need to do so.

Disabling All Interrupts

The following instruction will disable all interrupts.

```
(@)INT(89)
      100
      000
      000
```

Note Interrupts that occur while interrupts are disabled will be recorded and processed when interrupts are enabled.

Enabling All Interrupts

The following instruction will enable all interrupts.

```
(@)INT(89)
      200
      000
      000
```

Note Enabling interrupts merely returns the interrupts to the status they were in before they were disabled. If an interrupt was masked before it was disabled, it will still be masked after it is enabled.

7-3 Interrupt Inputs

7-3-1 Applicable Models

Model numbers	Functions
CS1W-HIO01-V1	12 contact inputs, 8 contact outputs
CS1W-HCP22-V1	12 contact inputs, 8 contact outputs, 2 pulse inputs, 2 pulse outputs
CS1W-HCA22-V1	12 contact inputs, 8 contact outputs, 2 pulse inputs, 2 analog outputs
CS1W-HCA12-V1	12 contact inputs, 8 contact outputs, 1 analog input, 1 pulse input, 2 analog outputs

7-3-2 Outline

Contact inputs 0 to 3 to the Customizable Counter Unit can be used for external interrupt inputs. These inputs are allocated IR 00000 to IR 00003. The subroutines corresponding to these inputs are fixed and cannot be change. Contact inputs 0 to 3 correspond to subroutines 000 to 003.

Note Subroutines 000 to 003 can be used as normal subroutines when the input interrupts are not being used.

7-3-3 Interrupt Modes

There are two modes that can be used for the input interrupts. Each interrupt input can be set separately.

Input Interrupt Mode: An interrupt is generated when the input turns ON, OFF, or both.

Counter Mode: External signals are counted, decrementing from a SV, and an interrupt is generated when the PV equals 0.

The interrupt mode is set using the INT instruction for each interrupt input.

7-3-4 Interrupt Input Specifications

Input Interrupt Mode

Item	Specification
Interrupt condition	Input contacts 0 to 3 (IR 00000 to IR 00003) turn ON, OFF, or both (Set in DM 6620.)
Subroutine numbers	IR 00000 to IR 00003: Subroutines 000 to 003
Response time	0.08 ms (for ON) (from when interrupt condition is met until execution of subroutine is started)
Signal pulse width	ON: 0.1 ms min, OFF: 0.25 ms min.

Counter Mode

Item	Specification
Interrupt condition	Counter decremented from SV each time input contacts 0 to 3 (IR 00000 to IR 00003) turn ON, OFF, or both (Set in DM 6620) and PV reaches 0
Subroutine numbers	IR 00000 to IR 00003: Subroutines 000 to 003
Counting mode	Decrementing pulse input
Input method	Single phase
Counter frequency	2 kHz
Counter value	0000 to FFFF Hex
Counter PV storage	IR 00000 to IR 00003: SR 244 to SR 247
Counter SV storage	IR 00000 to IR 00003: SR 240 to SR 243

7-4 Executing Interrupt Tasks in the CPU Unit

7-4-1 Applicable Models

Model numbers	Functions
CS1W-HIO01-V1	12 contact inputs, 8 contact outputs
CS1W-HCP22-V1	12 contact inputs, 8 contact outputs, 2 pulse inputs, 2 pulse outputs
CS1W-HCA22-V1	12 contact inputs, 8 contact outputs, 2 pulse inputs, 2 analog outputs
CS1W-HCA12-V1	12 contact inputs, 8 contact outputs, 1 analog input, 1 pulse input, 2 analog outputs

7-4-2 Outline

The MCRO instruction can be executed in the ladder program in the Customizable Counter Unit to start an external interrupt task in the CPU Unit.

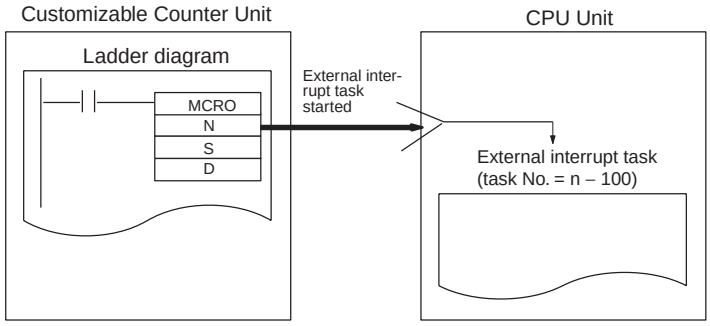

Using MCRO

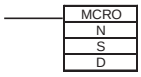

N: External interrupt task number in CPU Unit
(N = 100 to 199 for task numbers 0 to 99)
Set S and D to 000.

Example: When specifying to execute the external interrupt task has been completed, the Equals Flag (SR 25506) will turn ON. This can be used as shown below to monitor completion of specifying the start of the task.

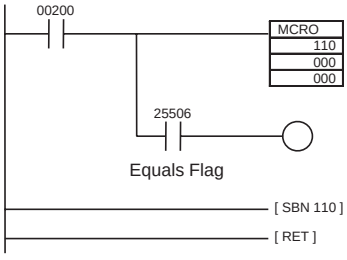

External interrupt task 10 in the CPU Unit will start when IR 00200 in the Customizable Counter Unit turns ON. The Equals Flag (SR 25506) will turn ON specifying to execute the external interrupt task has been completed.

Note Be sure to use 100 plus the interrupt task number as the value of the first operand.

Note

1. Program a dummy subroutine for the subroutine number specified for MCRO, as shown above.
2. If the external interrupt task is set to 1, 2, or 3, the power interruption or scheduled interrupt tasks in the CPU Unit will be executed. If these tasks are going to be executed from the Customizable Counter Unit, they should normally be disabled from the CPU Unit as the power interruption or scheduled interrupt tasks. If they are not disabled, they will be executed both for their normal conditions as well as for MCRO from the Customizable Counter Unit.

7-5 Pulse Inputs

7-5-1 Applicable Models

Model numbers	Functions
CS1W-HCP22-V1	12 contact inputs, 8 contact outputs, 2 pulse inputs, 2 pulse outputs
CS1W-HCA22-V1	12 contact inputs, 8 contact outputs, 2 pulse inputs, 2 analog outputs
CS1W-HCA12-V1	12 contact inputs, 8 contact outputs, 1 analog input, 1 pulse input, 2 analog outputs

7-5-2 Outline

The CS1W-HCP22-V1 and CS1W-HCA22-V1 Customizable Counter Unit provide 2 pulse inputs. The pulse inputs can be used to count pulse signals from rotary encoders or other devices with highspeed counters and perform processing according to the PV of the count. The following processes are possible.

Process	Description
Target value interrupts	A subroutine is executed as interrupt processing when the high-speed counter PV equals a target value.
Bit pattern outputs for range comparisons	A user-set bit pattern is output internally when the high-speed counter PV is within a specified range.

Note Interrupts cannot be generated for range comparisons. Only bit patterns are output. Use the bit patterns to trigger other processing as required.

The rate of change or frequency of a high-speed counter PV can also be measured from the program as required.

7-5-3 Specifications

Item			Specification		
Number of counters			2 (one for each pulse input port)		
Pulse input mode (Set in Unit Setup Area.)			Differential-phase	Increment/decrement	Pulse + direction
Input pin numbers	Port 1	Port 2			
	24 V: B2 (A1) 5 V: A2 (A1)	24 V: B8 (A7) 12 V: A8 (A7)	Phase A	Increment pulse	Pulse
	24 V: B4 (A3) 5 V: A4 (A3)	24 V: B10 (A9) 12 V: A10 (A9)	Phase B	Decrement pulse	Direction pulse
	24 V: B6 (A5) 5 V: A6 (A5)	24 V: B12 (A11) 12 V: A12 (A11)	Phase Z	Reset pulse	Reset pulse
Input method			Differential-phase; x1, x2, x4 (switchable)	Single-phase x 2	Single-phase + direction
			Set in Unit Setup Area. (Port 1: Bits 00 to 03 of DM 6605, port 2: Bits 00 to 03 of DM 6607)		
Counter frequency (set separately for each port)			50 kHz (default) or 200 kHz		
Counting mode			Linear Mode or Ring Mode (Set in Unit Setup Area.)		
Counter values			Linear Mode: 8000 0000 to 7FFF FFFF Hex Ring Mode: 0000 0000 to Ring set value (Hex) (The ring set value is set in Unit Setup Area between 0000 0001 and FFFF FFFF Hex.)		

Item		Specification
High-speed counter PV storage locations		Port 1: AR 01 (upper bytes) and AR 00 (lower bytes) Port 2: AR 03 (upper bytes) and AR 02 (lower bytes) Target value or range comparison can be performed for the above values. These values are updated during the I/O refresh period of the Customizable Counter Unit. The stored data can be read using the PRV instruction.
		Stored Data (8-digit hexadecimal) Linear Mode: 8000 0000 to 7FFF FFFF Hex Ring Mode: 0000 0000 to Ring set value (Hex)
Control method	Target value comparison	Up to 48 target values and interrupt subroutines registered.
	Range comparison	Up to 16 upper limits, lower limits, and output bit patterns registered.
Counter reset		Phase Z Signal + Software Reset The counter is reset on the phase-Z signal if the Reset Bit is ON. Software Reset The counter is reset when the Reset Bit is turned ON. The counter reset methods is set in Unit Setup Area.
		Reset Bit Port 1: AR 0901, port 2: AR 0909
Mea-sure-ment mode	High-speed counter rate of change for port 1 or 2	The change in the high-speed counter's PV for the set sampling time or each scan is measured. Sampling time: 1 to 99 ms Rate of change: 0000 0000 to FFFF FFFF Hex
	High-speed frequency for port 1	The frequency is calculated from the PV between 0 and 200,000 Hz.
	Measurement storage location for above measurements	Port 1: AR 05 (upper bytes) and AR 04 (lower bytes) Port 2: AR 07 (upper bytes) and AR 06 (lower bytes) The high-speed counter value can also be read with the PRV instruction.
		Stored Data Rate of change: 8-digit hexadecimal Frequency: 8-digit BCD Updated during the I/O refresh period.
	Measurement mode set in User Setup Area (Port 1: Bits 00 to 03 of DM 6606; port 2: Bits 00 to 03 of DM 6608) Measurement is started when the Measurement Start Bit (AR 0902 or AR 0910) is turned ON. The Measuring Flag (AR 0806 or AR 0814) will turn ON during the measurement.	

Pulse Input Specifications

Item	Specification							
Number of pulse inputs	2 inputs (port 1 and port 2 = high-speed counter 1 and high-speed counter 2) Port 1 is an RS-422A line driver input or an input voltage of 5 or 24 VDC. Port 2 is an RS-422A line driver input or an input voltage of 5 or 12 VDC.							
Signals	Encoder inputs A and B and pulse input Z							
Ports	Port 1		Port 2		Ports 1 and 2		Ports 1 and 2	
Input voltage	5 VDC ±5%		12 VDC ±10%		24 VDC ±10%		RS-422A line driver (AM26LS31)	
	Phases A and B	Phase Z	Phases A and B	Phase Z	Phases A and B	Phase Z	Phases A and B	Phase Z
Input current	5 mA typ	7 mA typ	6 mA typ	10 mA typ	5 mA typ	8 mA typ	10 mA typ	13 mA typ
ON voltage	4.5 V min.	4.5 V min.	8.8 V min.	7.8 V min.	19.6 V min.	18.6 V min.	---	---
OFF voltage	1.5 V max.	1.3 V max.	2.4 V max.	2.0 V max.	4.0 V max.	4.0 V max.	---	---

Item	Specification	
Minimum response pulse		
At 50 kHz	Encoder Inputs A and B Signal rise and fall must be 3 µs max. 50-kHz pulse with 50% duty ratio 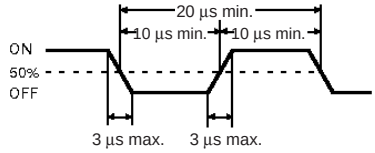 Differential-phase Inputs A and B T1, T2, T3,and T4 must be 4.5 µs max. There must be 4.5 µs min. between phase-A and phase-B change points. 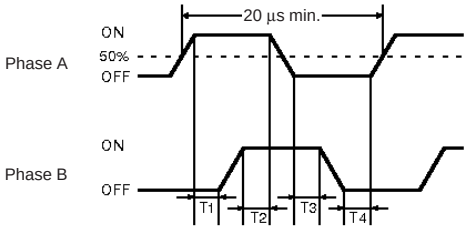 Encoder Input Z or Sensor Input The pulse width must be 90 µs min. 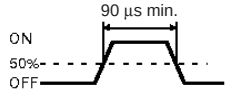 	Encoder Inputs A and B Square waveform 50-kHz pulse with 50% duty ratio 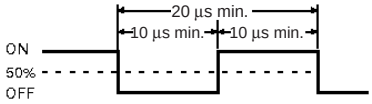 Differential-phase Inputs A and B T1, T2, T3,and T4 must be 4.5 µs max. There must be 4.5 µs min. between phase-A and phase-B change points. 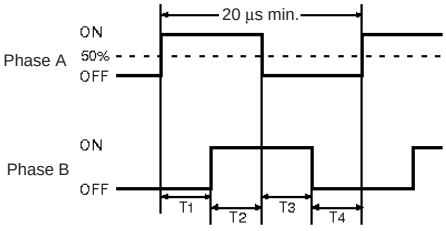 Encoder Input Z or Sensor Input The pulse width must be 90 µs min. 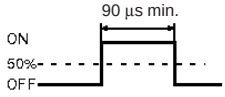
At 200 kHz	Operation may not be reliable above 50 kHz.	Encoder Inputs A and B Square waveform 200-kHz pulse with 50% duty ratio 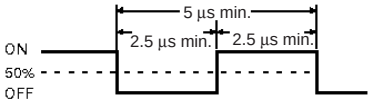 Differential-phase Inputs A and B T1, T2, T3,and T4 must be1.0 µs max. There must be 1.0 µs min. between phase-A and phase-B change points. 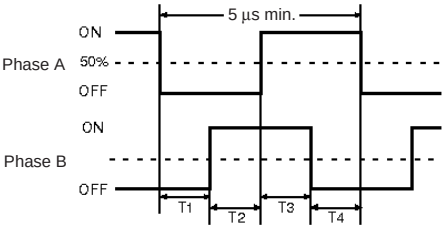 Encoder Input Z or Sensor Input The pulse width must be 90 µs min. 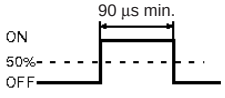

Applicable Instructions

Instruction	Control	Description
(@)CTBL(63)	Range comparison	One range comparison executed.
	Target value comparison table registration and starting comparison	Target value comparison table registered and comparison started.
	Target value comparison table registration	Target value comparison table registered.
(@)INI(61)	Starting comparison	Comparison started with previously registered target value comparison table.
	Stopping comparison	Target value comparison stopped.
	Changing PV	PV of high-speed counter changed.
(@)PRV(62)	Reading high-speed counter PV	PV of high-speed counter read.
	Reading high-speed counter rate of change or frequency	Rate of change or frequency of high-speed counter read.

7-5-4 Internal Circuit Configurations

Phases A and B of Pulse Input

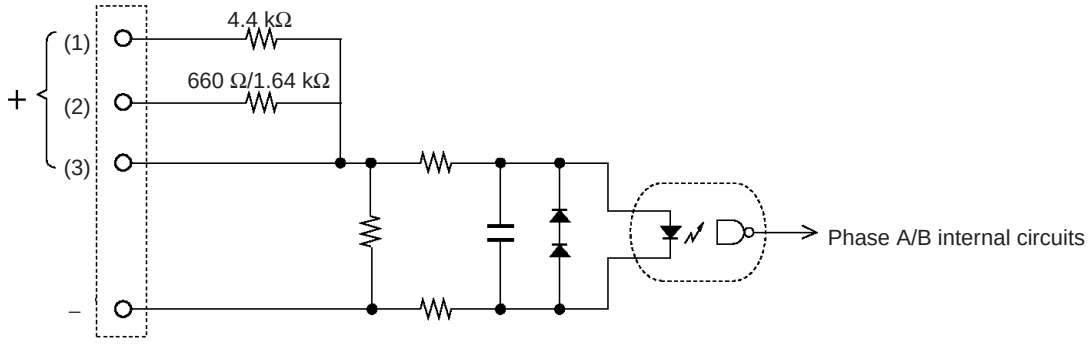

(1) 24-V input
(2) Pulse input 1: 5-V input, Pulse input 2: 12-V input
(3) Line-driver input

Phase Z of Pulse Input

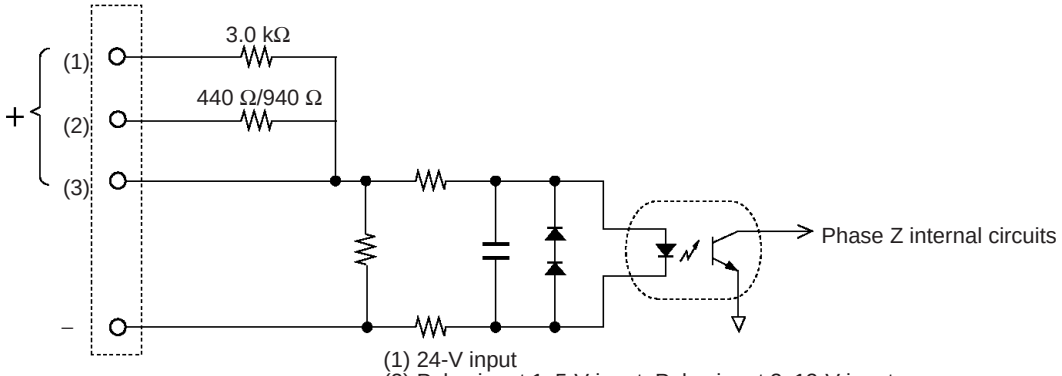

(1) 24-V input
(2) Pulse input 1: 5-V input, Pulse input 2: 12-V input
(3) Line-driver input

7-6 Pulse Outputs

7-6-1 Applicable Models

Model numbers	Functions
CS1W-HCP22-V1	12 contact inputs, 8 contact outputs, 2 pulse inputs, 2 pulse outputs

7-6-2 Outline

The CS1W-HCP22-V1 Customizable Counter Unit provides 2 pulse outputs. The pulse outputs can be used for the following functions.

Note Set the pulse output mode for each output in User Setup Area words DM 6613 and DM 6614.

Function	Description	Processing for PV
Pulse outputs	The pulse outputs can be used for positioning or speed control at a fixed duty ratio. Select one of five pulse output modes: Relative pulse output, linear absolute pulse output, ring absolute pulse output, electronic cam (linear), and electronic cam (ring).	Target value interrupts (note 2) or bit pattern outputs for range comparisons for PV of pulse output.
One-shot pulse outputs	Pulse output turned ON for only the specified interval (0.01 to 9,999 ms.)	None
Pulse output counter timer	Enables using the pulse output counter as a timer using the one-shot pulse output timer. **Note:** Pulses are not output for this mode and the specified port cannot be used for pulse output.	Target value interrupts or bit pattern outputs for range comparisons for PV of pulse counter.

Note

1. The processes listed in the following table can be performed for the PV of a pulse output, pulse output counter timer, or one-shot pulse output elapsed time.
2. Cannot be combined with pulse output in independent mode.

Process	Description
Target value interrupts	A subroutine is executed as interrupt processing when the high-speed counter PV equals a target value.
Bit pattern outputs for range comparisons	A user-set bit pattern is output internally when the high-speed counter PV is within a specified range.

7-6-3 Specifications

Item	Specification			
Acceleration/ deceleration	None		Yes	
Trapezoid	None		None (acceleration or deceleration)	Yes with separate acceleration and deceleration rates
Instructions for independent-mode positioning	PULS + SPED	PULS (Electronic Cam Mode)	PULS + ACC	PLS2
Instructions for continuous-mode speed control	SPED	---	ACC	---
Output frequencies	Constant for SPED: 10 to 99,990 Hz Word for SPED: 6 Hz to 200 kHz	6 Hz to 200 kHz	6 Hz to 200 kHz	
	Although the above ranges can be set for the instructions, the output frequency range is ultimately controlled by the clock frequency. The output frequencies are obtained by dividing the clock pulse with an integer dividing ratio, meaning the actual output frequency can be different from the set frequency. The settings in the User Setup Area are as follows (DM 6613 and DM 6614, bits 08 to 15): 00 Hex: 25 MHz Pulse output frequency range: 400 Hz to 200 kHz 01 Hex: 6.25 MHz (25/4) Pulse output frequency range: 100 Hz to 100 kHz 02 Hex: 1.5625 MHz (25/16) Pulse output frequency range: 25 Hz to 50 kHz 03 Hex: 390.625 kHz (25/64) Pulse output frequency range: 6 Hz to 20 kHz			
Frequency acceleration/ deceleration rate	---		1 Hz to 2 kHz every 2 ms 1 Hz to 9,999 Hz every 1 ms (Suported by -V1 unit with lot number 0209__ or later)	
Duty ratio	50%			
Pulse output modes	One of the following can be set for each port in the User Setup Area. 1) Relative pulse output: No. of output pulses = pulse output value 2) Linear-mode absolute pulse output: No. of output pulses = |PV of pulse output – target pulse amount| 3) Ring-mode absolute pulse output: As above. If the ring set value is exceeded, the count value returns to 0000 0000 Hex. (Ring set value is set in Unit Setup Area.) 4) Electronic cam mode (linear) (output with absolute position specification:) The direction is automatically determined from the relation between the PV and target position (PV < Target = CW, PV > Target = CCW. No. of output pulses = |PV of pulse output – target pulse amount| 5) One-shot pulse output: Pulse turned ON for specified time between 0.01 and 9,999 ms via STIM instruction 6) Pulse counter timer: High-precision timer created using the one-shot pulse output function. Pulses are not output externally. 7) Electronic cam (ring) (output with absolute position specification): The direction is automatically determined from the relation between the PV and target position (PV < Target = CW, PV > Target = CCW). No. of output pulses = |PV of pulse output – target pulse amount)|			

Item	Specification
Number of pulse outputs	1) Relative pulse output: 0000 0000 to FFFF FFFF Hex 2) Linear-mode absolute pulse output: 8000 0000 to 7FFF FFFF Hex 3) Ring-mode absolute pulse output: 0000 0000 to Ring set value Hex 4) Electronic cam mode (linear) (output with absolute position specification): 8000 0000 to 7FFF FFFF Hex 5) Electronic cam mode (ring) (output with absolute position specification): 8000 0000 to 7FFF FFFF Hex The number of pulses is not set for a one-shot pulse output or pulse counter timer.
Storage location for PV of pulse output	The PV for the above output pulses 1 to 4 are stored as follows: Port 1: AR 15 (upper bytes), AR 14 (lower bytes) Port 2: AR 17 (upper bytes), AR 16 (lower bytes) Target value interrupts or bit pattern outputs for range comparisons can be performed for the PV. The contents of the above words is updated during the I/O refresh period.

Pulse Output Specifications

All Pulse Outputs Except for One-shot Pulse Outputs

Item	Specification
Number of pulse outputs	2 outputs (Port 1 = pulse output 1, port 2 = pulse output 2)
Signals	Pulse output CW and CCW
Max. output frequency	200 kHz (but actual output frequencies are governed by clock frequency setting)
External power supply	24 VDC +10%/–15%, 30 mA max.
Max. switching capacity	NPN open-collector, 30 mA at 5 to 24 VDC ±10% (With 1.6 kΩ trimmer resistor: 16 mA at 5 to 24 VDC ±10%)
Min. switching capacity	NPN open-collector, 7 mA at 5 to 24 VDC ±10%
Leakage current	0.1 mA max.
Residual voltage	0.4 V max.
Pulse output specifications	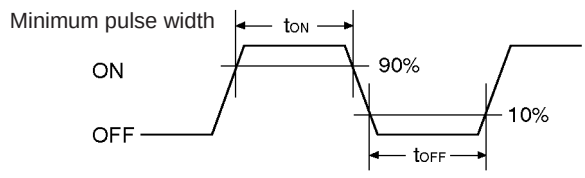

Pulse frequency	Switching current/load power supply							
	7 mA/5 VDC ±5%		30 mA/5 VDC ±5%		7 mA/24 VDC ±10%		30 mA/24 VDC ±10%	
	t_{ON}	t_{OFF}	t_{ON}	t_{OFF}	t_{ON}	t_{OFF}	t_{ON}	t_{OFF}
50 kpps max.	9.7 μs min.	9.7 μs min.	9.8 μs min.	9.8 μs min.	9.6 μs min.	9.6 μs min.	9.8 μs min.	9.8 μs min.
100 kpps max.	4.7 μs min.	4.7 μs min.	4.8 μs min.	4.8 μs min.	4.6 μs min.	4.6 μs min.	4.8 μs min.	4.8 μs min.
200 kpps max.	2.2 μs min.	2.2 μs min.	2.3 μs min.	2.3 μs min.	2.1 μs min.	2.1 μs min.	2.3 μs min.	2.3 μs min.

Note
1. The above loads are assumed to be simple resistive loads and the impedance of the cable connecting the load is not considered.
2. The actual pulse widths may be smaller than those specified above due to pulse form distortion caused by connection cable impedance.

One-shot Pulse Outputs

Item	Specification
Number of pulse outputs	2 outputs (Port 1 = pulse output 1, port 2 = pulse output 2)
External power supply	24 VDC +10%/–15%, 30 mA max.
Max. switching capacity	NPN open-collector, 80 mA at 5 to 24 VDC ±10%
Min. switching capacity	NPN open-collector, 7 mA at 5 to 24 VDC ±10%
Leakage current	0.1 mA max.
Residual voltage	0.4 V max.
Output pulse width	Set time ± (1 µs or 0.1% of set time, whichever is larger) 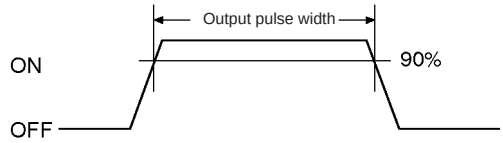 **Note** 1. The above loads are assumed to be simple resistive loads and the impedance of the cable connecting the load is not considered. 2. The actual pulse widths may be smaller than those specified above due to pulse form distortion caused by connection cable impedance.

Applicable Instructions

The following seven instructions can be used to control pulse outputs. The relationship between the instruction and the types of pulse output that is possible is also listed in the following table.

Instruction	Control	Independent Positioning Mode			Continuous Speed Control Mode	
		No acceleration/ deceleration, single-phase output	Acceleration/deceleration, single-phase output		No acceleration/ deceleration, single-phase output	Acceleration/ deceleration, single-phase output
			No trapezoid, acceleration and deceleration	Trapezoid, separate acceleration and deceleration rates		
PULS	Sets number of output pulses or absolute position.	OK	No	No	No	No
SPED	Controls pulse output without acceleration or deceleration (number of pulses set with PULS for positioning).	OK	No	No	OK	No
ACC	Controls pulse output with same acceleration and deceleration without trapezoid (number of pulses set with PULS for positioning).	No	OK	No	No	OK
PULS for Electronic Cam	Sets absolute position or frequency and outputs pulses.	OK	No	No	No	No
PLS2	Controls pulse output with different acceleration and deceleration with trapezoid (number of pulses is also set using PLS2).	No	No	OK	No	No
INI	Stops pulse output.	OK	OK	OK	OK	OK
PRV	Reads the current PV for pulse output.	OK	OK	OK	OK	OK

Once pulse output has been started by an instruction, the output cannot always be changed with an instruction. Refer to the *Customizable Counter Unit Programming Manual* for details.

7-6-4 Precaution in Using Pulse Outputs

Pulses are output from the CS1W-HCP22-V1 according to the clock frequency specified in the Unit Setup Area (bits 08 to 15 of DM 6613 and DM 6614: 25 MHz, 6.25 MHz, 1.5625 MHz, or 390.625 kHz). The clock signal is divided by an integer dividing ratio to create and output the output pulse frequency. This means that the actual frequency may not be the same as the target frequency. Refer to the following information to calculate the actual frequency.

The following information is used to calculate the output frequency.

Target frequency:
Set by user.

Dividing ratio:
An integer set in the dividing circuit used to generate the output pulses at the target frequency.

Actual frequency:
The actual frequency that is output as generated by the dividing circuit.

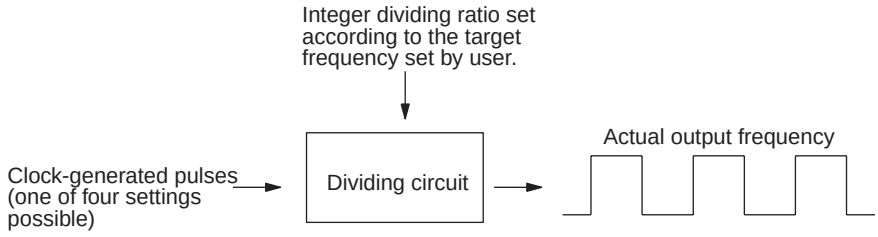

Formula:
Actual frequency = Clock frequency ÷ INT (clock frequency/target frequency)

Note INT (clock frequency/target frequency) is the dividing ratio.

The difference between the target frequency and the actual frequency increases at higher frequencies. The following tables shows examples for a clock frequency of 25 MHz.

Target frequency (Hz)	Actual output frequency
198,413 to 200,000	200,000
196,851 to 198,412	198,412
195,313 to 196,850	196,850
|	|
151,516 to 152,439	152,439
150,603 to 151,515	151,515
149,701 to 150,602	150,602
|	|
100,402 to 100,806	100,806
100,001 to 100,401	100,401
99,602 to 100,000	100,000
|	|
50,101 to 50,200	50,200
50,001 to 50,100	50,100
49,901 to 50,000	50,000
|	|
402	402
401	401
400	400

7-6-5 Speed-Changing Cycle Selection of ACC/PLS2 Instructions and Widening of Acceleration/Deceleration Setting Ranges

With the -V1 unit with lot No. 0209__ or later, the speed-changing cycle for acceleration and deceleration of ACC and PLS2 instructions can be selected from 1 ms or 2 ms. The speed-changing cycle of ACC and PLS2 instructions, and of port 1 and 2 have to be the same. Additionally, the setting ranges for acceleration and deceleration have been widened from 1 Hz to 2 kHz to 1 Hz to 9.999 kHz.

Switching the Speed-changing Cycle of ACC/ PLS2 Instructions

The speed-changing cycle for acceleration and deceleration of ACC and PLS2 instructions can be switched by the setting (ON/OFF) of bit 07 of AR 19 prior to the execution of the instructions.

2 ms Cycle

Execute ACC or PLS2 instruction with bit 07 of AR 19 OFF.

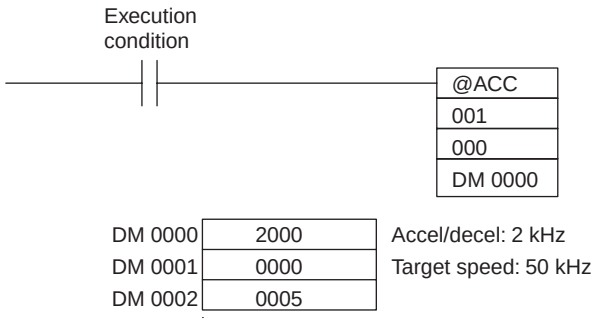

1 ms Cycle

Execute ACC or PLS2 instruction with bit 07 of AR 19 ON.

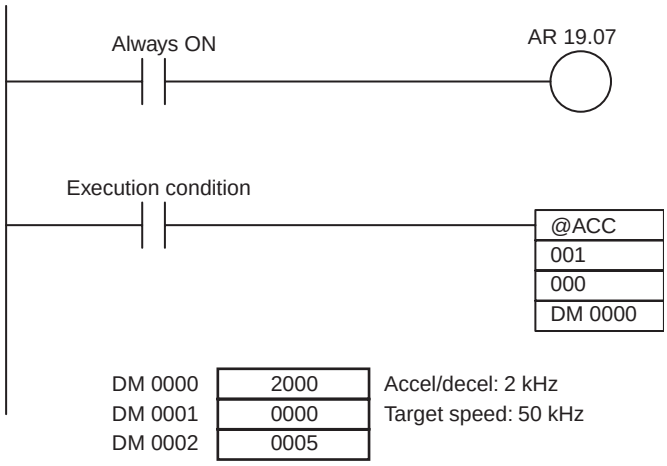

7-6-6 Pulse Output Direction and Absolute Position Designation Priority Modes

With -V1 lot No. 0209 or later Units, the direction that pulses are output by the PLS2 instruction depends on the priority mode that is selected. The direction may be determined automatically from the absolute position using absolute position designation as the priority mode, or it may be specified by a user-defined operand using the pulse output direction as the priority mode.

With Units prior to -V1 lot No. 0209, no pulses were output unless the output direction designated by the PLS2 instruction was the same as the output

direction designated by the absolute position (pulse output direction was the only priority mode).

Pulse Output Direction Priority Mode

In this mode, the user determines the pulse output direction using an operand. Pulses are output only if the output direction designated by PLS2 instruction is the same as the output direction designated by the absolute position.

Absolute Position Designation Priority Mode

In this mode, the pulse output direction is determined automatically from the absolute position. Designating pulse output direction using an operand is disabled here. This means that positioning is based strictly on the absolute position and no direction setting is supported.

Switching the Priority Mode between Pulse Output Direction and Absolute Position Designation

The priority mode can be switched between pulse output direction and absolute position designation by turning ON or OFF AR 1914 before executing the PLS2 instruction.

Note Pulse outputs are halved in both cases when the priority mode is switched.

Pulse Output Direction Priority Mode

Execute the PLS2 instruction with AR 1914 turned OFF.

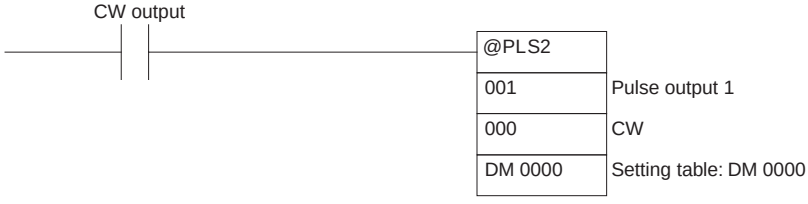

DM 0000	8000	Target position: 8000
DM 0001	0000	
DM 0002	0000	Target speed: 50 kHz
DM 0003	0005	
DM 0004	0000	Startup speed 0 Hz
DM 0005	0000	
DM 0006	1000	Acceleration: 1000 Hz
DM 0007	1000	Deceleration: 1000 Hz

Absolute Position Designation Priority Mode

Execute the PLS2 instruction with bit 14 in AR 19 turned ON.

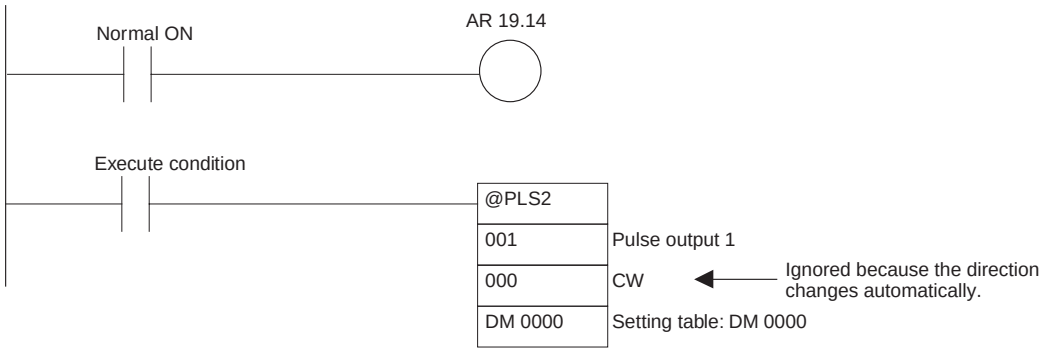

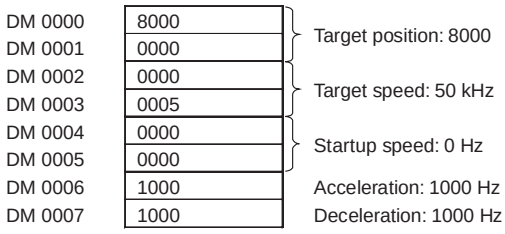

7-7 Analog Outputs

7-7-1 Applicable Models

Model numbers	Functions
CS1W-HCA22-V1	12 contact inputs, 8 contact outputs, 2 pulse inputs, 2 analog outputs
CS1W-HCA12-V1	12 contact inputs, 8 contact outputs, 1 analog input, 1 pulse input, 2 analog outputs

7-7-2 Outline

The CS1W-HCA22-V1/HCA12-V1 Customizable Counter Unit provides 2 analog outputs. The analog outputs can be set to –10 to 10 V, 0 to 10 V, 0 to 5 V, or 1 to 5 V. There is a separate setting for each output.

Normally, the analog values stored in AR 14 and AR 15 are output cyclically on the END refresh, but the outputs values can also be refreshed using the SPED instructions for step-wise output or the ACC instruction for slopped output.

7-7-3 Specifications

Analog Outputs

Item	Specification
Output signals	Voltage outputs
Number of analog outputs	2 outputs
Output signal ranges	One of the following set in the Unit Setup Area (port 1: DM 6613, port 2: DM 6614) –10 to 10 V, 0 to 10 V, 0 to 5 V, or 1 to 5 V
D/A conversion time	0.05 ms max.
Resolution	–10 to 10 V: 1/10,000 (14-bit value stored between EC78 and 1388 Hex) 0 to 10 V, 0 to 5 V, or 1 to 5 V: 1/4,000 (12-bit value stored between 0000 and 0FA0 Hex)

Item		Specification	
Analog output refresh method		Refreshing of analog outputs is set in the Unit Setup Area (DM 6630 bits 00 to 07 for both ports) to one of the following: END refresh Immediate refresh via SPED or ACC execution	
		END refresh	If the Analog Output Conversion Enable Bit is ON (port 1: AR 1600, port 2: AR 1601), the value in AR 14 or AR 15 is output after program execution.
		Immediate refresh via instructions	If the Analog Output Conversion Enable Bit is ON, the specified analog value is output when the instruction is executed in the program. SPED: Analog output varied stepwise ACC: Analog output with up or down slop (every 2 ms) **Note 1:** Analog output values can also be controlled from interrupt subroutines. **Note 2:** The value of the analog outputs from startup until an instruction controlling the analog output is executed will be as set for the analog output hold function.
Analog output values		For END refresh, the values in AR 14 and AR 15 are output. For immediate refresh via instructions, the following values are output according to the operands of the instruction. –10 to 10 V: EC78 to 1388 Hex (–5,000 to 5,000 decimal) (resolution: 10,000) corresponding to 0% to 100% voltage (–10 to 10 V) (Actually, the setting range is EA84 to 157C (–5,500 to 5,500 decimal) corresponding to –5% to 105% voltage (–11 to 11 V) 0 to 10 V, 0 to 5 V, or 1 to 5 V: 0000 to 0FA0 Hex (0000 to 4,000 decimal) (resolution: 4,000) corresponding to 0% to 100% of the FS range. (Actually, the setting range is FF38 to 1068 (–200 to 4,200 decimal) corresponding to –5% to 105% voltage (–0.5 to 10.5 V, –0.25 to 5.25 V, or 0.8 to 5.2 V)	
Analog output value storage locations		Port 1: AR 14, port 2: AR 15 For END refresh, the value on the END refresh. If the hold function is used, however, to clear or to output the peak value, the actual output value may be different. For immediate instruction refreshing, the value specified for output by SPED or ACC is stored in these words. If the hold function is used, the values output for the hold function are stored.	
Max. external output current		12 mA	
Overall accuracy (See note 1.)	23 ±2°C	±0.3% of FS	
	0 to 55°C	±0.5% of FS	
Functions	Slope	The ACC instruction can be used to change the analog output value at the following rates: –10 to 10 V: 0000 to 2AF8 Hex (0 to 11,000 decimal) 0 to 10 V, 0 to 5 V, or 1 to 5 V: 0000 to 1130 Hex (0 to 4,400 decimal)	
	Output hold	The output value is cleared, held at peak value, or held at the current value for the following. Analog Output Conversion Enable Bit (port 1: AR 1600, port 2: AR 1601) turns OFF. Analog Output SV Error Flag (port 1: AR 1708, port 2: AR 1709) turns ON. Fatal error occurs for the Customizable Counter Unit (except for Customizable Counter Unit WDT error or flash memory adjustment data error). (See note 2.) The other analog output if one output is being adjusted in adjustment mode.	
	Offset/gain adjustment	The output values can be offset as required by the connected device. In Adjustment Mode (set in DM 6631 of the User Setup Area for both ports), the offset or gain can be specified and changed by manipulating the Up and Down Bits from a Programming Device while the Adjustment Enable Bit (port 1: AR 1800, port 2: AR 1801) is ON. Offset values: –10 to 10 V: FE0C to 01F4 Hex 0 to 10 V, 0 to 5 V, or 1 to 5 V: FF38 to 00C8 Hex Gain values: –10 to 10 V: 1194 to 157C Hex 0 to 10 V, 0 to 5 V, or 1 to 5 V: 0ED8 to 1068 Hex	

Note 1. Accuracy applies to full scale.

2. Analog outputs are treated as described in the following table for fatal errors in the Customizable Counter Unit or CPU standby status for the CPU Unit.

Condition	Analog output
WDT error in Customizable Counter Unit	Output near 0 V (0 V if no offset is set).
Flash memory adjustment data error (flash memory error and adjustment data error indicated in AR Area) or CPU standby error in CPU Unit	
Any other fatal error for Customizable Counter Unit (flash memory errors not listed above, FALS, etc.	The output status specified for the hold function (clear, peak, or hold) will be output.

If there is an error in the settings for the analog outputs in the User Setup Area (DM 6613, DM 6614, DM 6630, and DM 6631), the following status will be used.

Output signal range: – 10 to 10 V
Output hold function: Clear
Refresh method: END refresh

Specified Output Values and Analog Output Signals

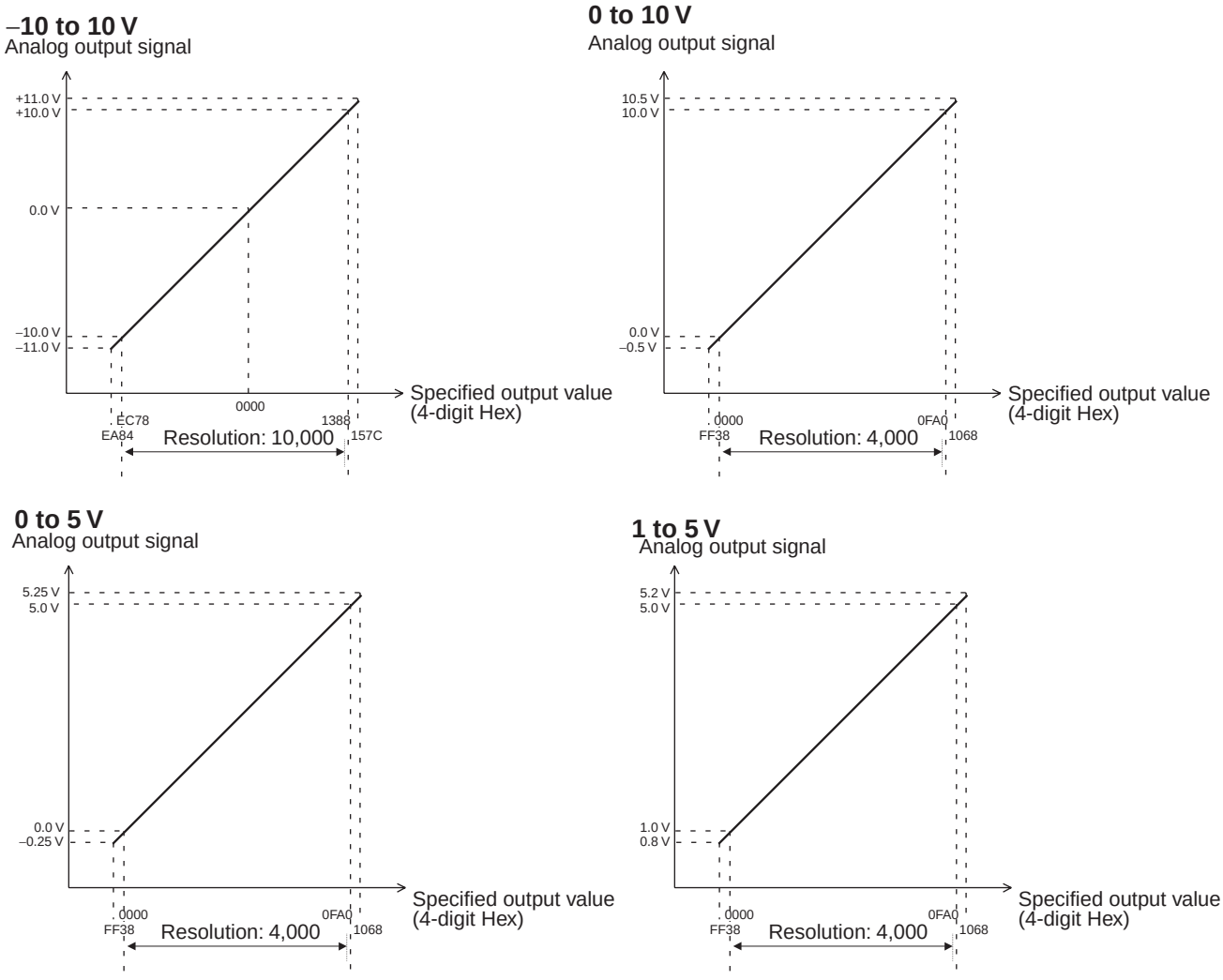

Applicable Instructions

END Refresh

Use instructions, such as MOV, to store the analog output value in AR 14 and AR 15 and then turn ON the Analog Output Conversion Enable Bit (AR 1600 or AR 1601).

Immediate Refresh Using Instructions

Outputs can be controlled with SPED and ACC as outlined below.

SPED can be used to vary the output value stepwise.

(@) SPED
P
000
F

P: Port specifier
= 001 for analog output 1 and 002 for analog output 2

M: Always 000.

F: Analog amount

F: Analog Amount

The target analog output value is specified as a 4-digit hexadecimal value.

– 10 to 10 V	EA84 to 157C Hex (–5,500 to 5,500 decimal, resolution: 11,000)
0 to 10 V, 0 to 5 V, 1 to 5 V	FF38 to 1068 Hex (–200 to 4,200 decimal, resolution: 4,400)

ACC can be used to slope the analog output value

(@) ACC
P
000
C

P: Port specifier
= 001 for analog output 1 and 002 for analog output 2

M: Always 000.

C: First control word
C = Rate of change, C+1 = Analog output target value

C = Rate of Change

C contains the rate of change (slope) per 2 ms.

–10 to 10 V	0000 to 2AF8 Hex (0 to 11,000 decimal)
0 to 10 V, 0 to 5 V or 1 to 5 V	0000 to 1130 Hex (0 to 4,400 decimal)

C+1 = Analog Output Target Value

C+1 is set to the target analog output value as a 4-digit hexadecimal value.

–10 to 10 V	EA84 to 157C Hex (–5,500 to 5,500 decimal, resolution: 11,000)
0 to 10 V, 0 to 5 V or 1 to 5 V	FF38 to 1068 Hex (–200 to 4,200 decimal, resolution: 4,400)

Note ACC and SPED cannot be used to change the analog output value while ACC is being used to control a sloped output. Change the output value only after the target value has been reached.

7-8 Functions Compatible with Servo Drivers with Absolute Encoders

7-8-1 Applicable Models

Model numbers	Functions
CS1W-HCP22-V1 (See note.)	12 contact inputs, 8 contact outputs, 2 pulse inputs, 2 pulse outputs
CS1W-HCA22-V1 (See note.)	12 contact inputs, 8 contact outputs, 2 pulse inputs, 2 analog outputs
CS1W-HCA12-V1	12 contact inputs, 8 contact outputs, 1 analog input, 1 pulse input, 2 analog outputs

Note Supported by -V1 unit with lot number 0209__ or later.

7-8-2 Overview

Either of the following types of pulse input signals can be input to the unit:

- Pulse trains from normal incremental encoders, etc.
- Encoder output data (Ex: OMRON's W series, etc.) of servo drivers with absolute encoders (multi-turns absolute encoders)

The following explains the functions that are compatible with the latter, servo drivers with absolute encoders.

Note As for the pulse train inputs from normal incremental encoders, etc., the pulse input functions are the same as the ones of the model CS1W-HCP22(-V1)/HCA22(-V1). Refer to *Pulse Inputs* on page 126 for details.

To input the encoder output data from a servo driver with an absolute encoder to the unit (CS1W-HCA12-V1), the SEN output signal from the unit has to be connected to the servo driver. When starting an operation, the amount of multi-turns (to phase A as serial data) and the initial incremental pulse (to phase A/B as pulse) are input once as the absolute position information.

After that, the position data during operations are input with the phase difference input (using normal counter functions).

Using a servo driver with an absolute encoder enables the controlled operation to be started from the position at turning on the power without performing any origin searches.

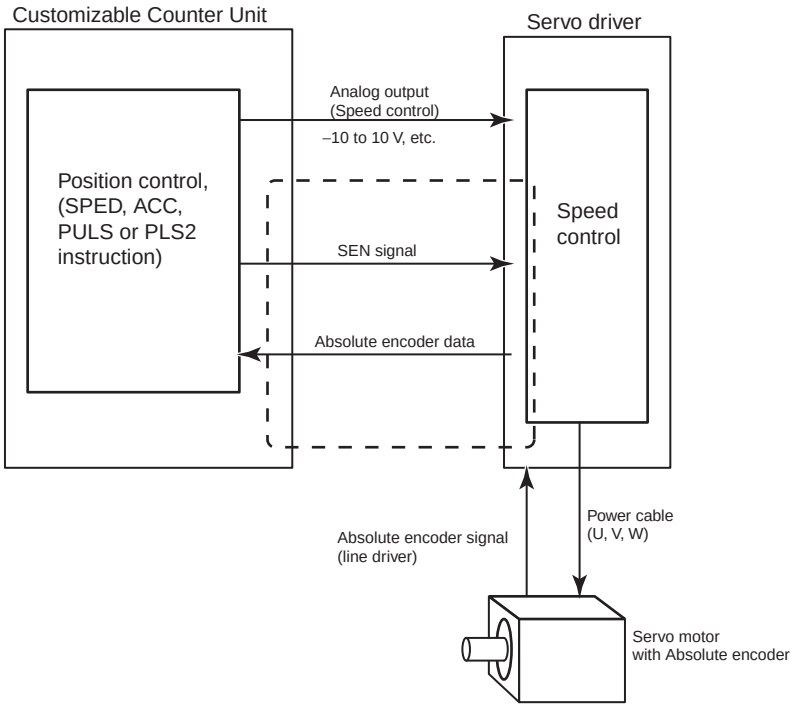

7-8-3 Data Format of Absolute Encoder Output

The format of data from a servo driver with an absolute encoder compatible with the unit (model CS1W-HCA12-V1) is as follows:

Serial Data Specification

The number of digits for data on the number of rotations	5 digits
Data transmitting method	Asynchronous
Transfer rate	9600 bits/s
Start bit	1 bit
Stop bit	1 bit
Parity	Even numbers
Character code	ASCII 7 bits
Data format	8 characters

Data Format

Byte	+0	+1	+2	+3	+4	+5	+6	+7
	P (See note 1.)	Data on the number of rotations						CR
		Sign (+ or –) Whole numbers (5 digits of decimal numbers)						

Note

1. “P" of ASCII code. It is 50 Hex in hexadecimal.
2. The range of No. of rotations that can be received by the unit is between +65535 to –65535.
3. For details of the data on the number of multi-turns received from a servo driver, please check the manual of the servo driver in use.
4. Please set the unit function setting "high-speed counter 1 operating mode (DM 6605)" to either ABS linear (CW–) or ABS linear (CW+) mode corresponding to the setting of reverse rotation mode on the servo driver in use.

5. When the mode where the data on the number of rotations is output only in the + direction is set in the absolute encoder multi-turn limit setting, the data received by the unit is handled as described below according to the setting of "high-speed counter 1 operating mode" in the unit setup area:
   Ex) When a value between 0 and 65,534 is set on the servo driver
   High-speed counter 1 operating mode (DM6605)": ABS linear (CW–) mode

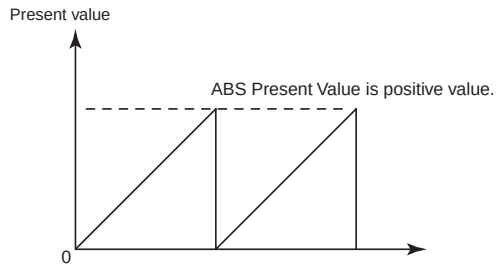

"High-speed counter 1 operating mode (DM 6605)": ABS linear (CW+) mode

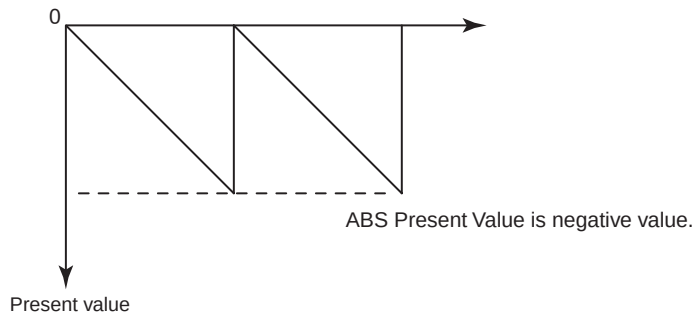

7-8-4 Counting Mode

Counting Operation

The counting operations by the ABS linear (CW–), ABS linear (CW+), and ABS ring modes inherits the ones by the linear/ring modes of the pulse input function on the models CS1W-HCP22(-V1)/HCA22(-V1). However, the normal linear mode does not have the function to receive the data on the number of rotations held in a servo driver with an absolute encoder.

Details of Each Counting Mode

The details of the ABS linear (CW–), ABS linear (CW+), and ABS ring modes are as follows:

■ **ABS Linear (CW–) Mode (DM 6605 Bit 12 to 15: 2 Hex)**

The pulse information when an absolute encoder is in reverse rotation is counted with linear mode.

■ **ABS Linear (CW+) Mode (DM 6605 Bit 12 to 15: 4 Hex)**

The pulse information when an absolute encoder is in forward rotation is counted with linear mode.

■ **ABS Ring Mode (DM 6605 Bit 12 to 15: 3 Hex)**

The pulse information of an absolute encoder is counted with ring mode. (Only the initial incremental pulse (angle) at reading an absolute value is used as the absolute value.)

7-8-5 ABS Number of Rotations Present Value (AR 04 to 05)

The multi-turn data (a present value read from an encoder) is input to the unit after the SEN signal is input to a servo driver. The data is stored as the ABS

number of rotations present value. The stored value is to follow the following conversion formula:

"ABS number of rotations present value (AR 04 to 05)" = R x M

"The number of Initial incremental pulses (AR 00 to 01)" = P_0

M: Multi-turn data (meaning how many times the axis of a rotary encoder rotated)

R (DM 6609, DM 6610): The number of pulses for encoder's one revolution

(Absolute encoder's resolution set on servo driver x phase-difference input multiplication of the unit (unit function setting: high-speed counter 1 input method (DM 6605 bit 00 to 03)))

P_0: The number of initial incremental pulses

P_s: ABS offset value (DM 6645/6646)

At reading the ABS number of rotations, the number of rotations corresponding to the number of initial incremental pulses is stored in AR 00 to 01.

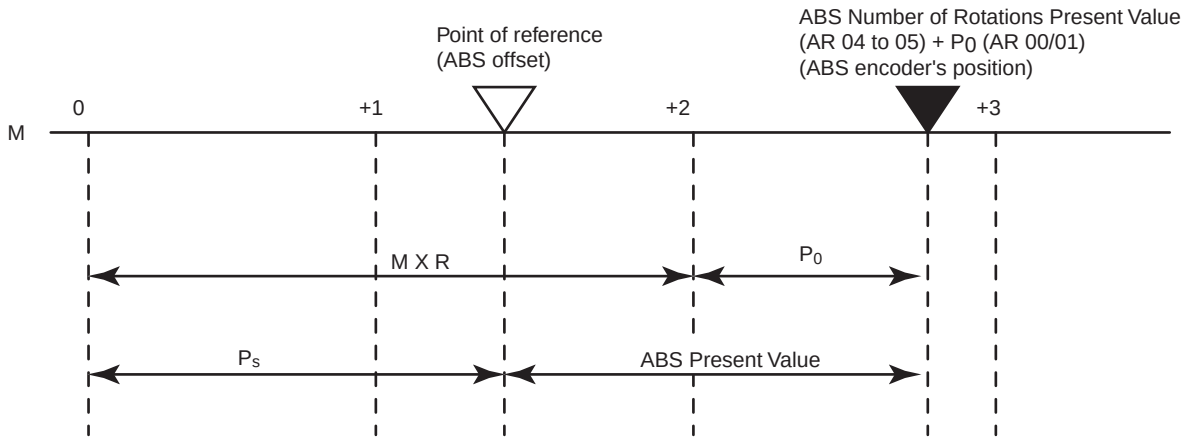

7-8-6 ABS Present Value

"ABS present value" can be found by subtracting an ABS offset value (DM 6645/6646) from the absolute encoder's state (position) at the SEN signal being turned ON.

The value is calculated using the following conversion formula and is used for "ABS present value preset function". It is not stored in the memory as data.

■ **In ABS Linear Mode**

"ABS present value" = "ABS number of rotations present value (AR 04 to 05)" + "number of initial incremental pulses (AR 00 to 01)" - P_s

P_s: ABS offset value (DM 6645/6646)

■ **In ABS Ring Mode**

"ABS present value" = $P_0 - P_s$

P_0: The number of initial incremental pulses

P_s: ABS offset value (DM 6645/6646)

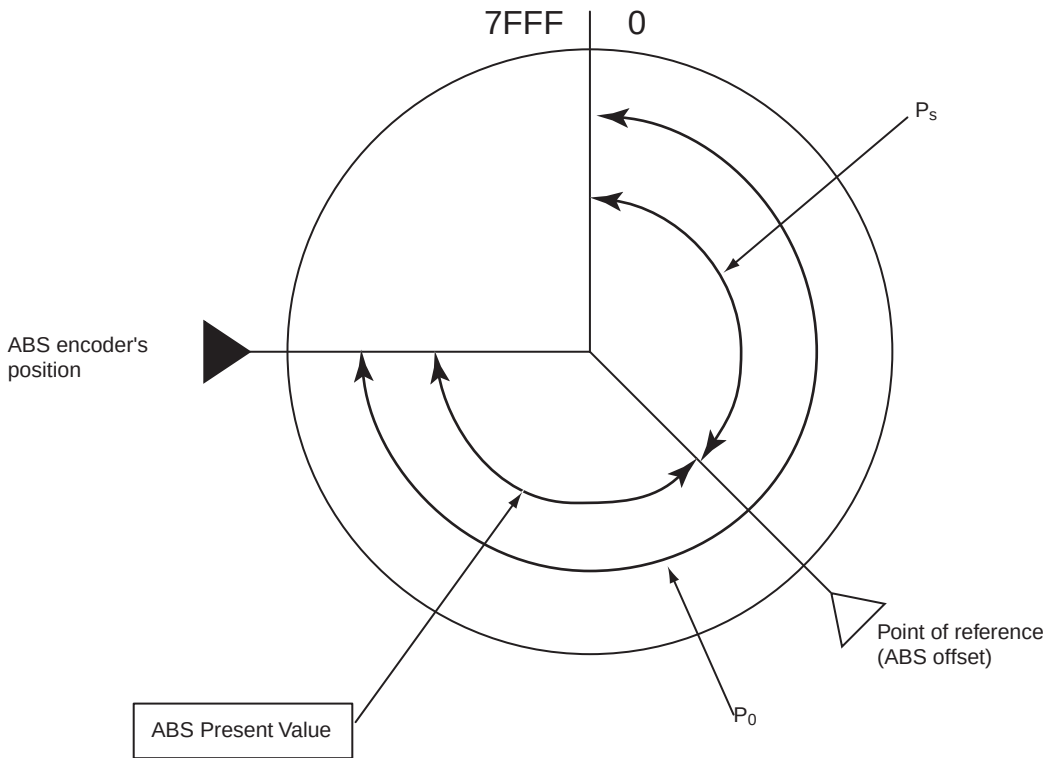

Note In ABS ring mode, the ABS number of rotations present value (AR 04/05) is not used; only the initial incremental pulses are used.
The initial incremental pulses are the data of an amount treated as the angle from an origin.

7-8-7 ABS Present Value Preset

The absolute encoder's state (ABS number of rotations present value (AR 04 to 05) and number of initial incremental pulses (AR 00 to 01)) at the SEN signal being turned ON can be reflected in "high-speed counter present value 1 (AR 00 to 01)". This function becomes available by turning ON "ABS present value preset (AR 09 bit 06)". The "ABS present value" is stored in "high-speed counter present value 1 (AR 00 to 01)". Additionally, ABS present values vary depending on the operating mode. See *4-1-5 ABS Present Value (p.4-5)* for details.

7-8-8 ABS Offset Preset

The present value to be defined as an origin is obtained from the ABS number of rotations present value (AR04 to 05) at the time and the number of initial incremental pulses. The value can be stored in the ABS offset value (DM 6645/6646). The value read from an absolute encoder at the time is defined as a machine (application) origin. This function becomes available by turning "ABS offset preset (AR 09 bit 05)" OFF once, then ON again.

7-8-9 Related Areas

Unit Setup Area

Address	Bits	Function		Details
DM 6605	00 to 03	High-speed counter 1	Pulse input mode	0 Hex: Differential-phase input x1 1 Hex: Differential-phase input x2 2 Hex: Differential-phase input x4 3 Hex: Increment/decrement pulse input 4 Hex: Pulse + direction
	04 to 07		Counter reset method	0 Hex: Software reset 1 Hex: Phase Z + software reset
	08 to 11		Input pulse frequency	0 Hex: 50 kHz 1 Hex: 200 kHz
	12 to 15		Counting mode	0 Hex: Linear counter 1 Hex: Ring counter The followings are available only on HCA12-V1: 2 Hex: ABS linear (CW–) 3 Hex: ABS ring 4 Hex: ABS linear (CW+)
DM 6609	00 to 15	ABS resolution (the No. of input pulses for encoder's 1 revolution)	Rightmost 4 digits	00000001 to 00008000Hex **Note:** Set the resolution considering servo driver's "encoder dividing rate" and unit's "pulse input multiplication setting". Ex: “Driver: 1000, unit: with multiplication of 4”: FA0 (4000)
DM 6610	00 to 15		Leftmost 4 digits	
DM 6645	00 to 15	ABS offset value	Rightmost 4 digits	8000 0000 to 7FFF FFFF Hex This is the application origin when using an absolute encoder.
DM 6646	00 to 15		Leftmost 4 digits	

Auxiliary memory area

Address	Bits	Function		Details		Controlled by	Forced set/reset
AR 00	00 to 15	High-speed Counter 1 PV		Rightmost 4 digits	Counter range: 8000 0000 to 7FFF FFFF Hex (8 digits hexadecimal) **Note:** In Linear Counter Mode, high-speed counter PVs are checked for overflow and under-flow errors when the PVs are read (at internal I/O refresh for the Customizable Counter Unit).	Unit	Disabled
AR 01	00 to 15			Leftmost 4 digits			
AR 04 to AR 05	00 to 15	Counting mode • ABS linear (CW–) • ABS ring • ABS linear (CW+)	ABS No. of rotations PV	Rightmost 4 digits	Multi-turn data (PV read from encoder) input to the counter unit is stored here when SEN signal is input to servo driver. 8000 0000 to 7FFF FFFF Hex (8-digit hexadecimal)		
				Leftmost 4 digits			
		Counting mode • Linear counter • Ring counter	High-speed counter monitor data	Rightmost 4 digits	• When monitoring (measurement mode 1) the rate-of-change of high-speed counter, the rate-of-change of high-speed counter PV within the set sampling time is stored with 8-digit hexadecimal. 0000 0000 to 7FFF FFFF Hex • When monitoring (measurement mode 2) high-speed counter frequency, the frequency is calculated based on the PV of high-speed counter for measuring frequency and the result is stored here with 8-digit BCD. 0000 0000 to 0020 0000 (BCD): 0 to 200,000 Hz		
				Leftmost 4 digits			
AR 06 to AR 07	00 to 15	High-speed counter 2 measurement data		Counter rate of change	The same as for high-speed counter 1. (The high-speed counter frequency is not stored. for high-speed counter 1.)		
AR 08	04	ABS PV read status		ABS No. of rotations read error	0: No error 1: Error occurred		Enabled
	05			ABS No. of rotations read completed	0: Not reading or reading 1: Reading completed (This is set at the completion of receiving serial data on No. of rotations.)		

Address	Bits	Function	Details		Controlled by	Forced set/reset
AR 09	05	ABS encoder input commands	ABS offset preset	0: No preset 0 to 1: Offset value obtained from multi-turn data from servo driver and the No. of initial incremental pulses are stored in ABS offset value (DM 6645/6646). When defining machine origin, difference between machine and encoder's origins is preset to DM 6645/6646 as ABS offset value.	User	Enabled
	06		ABS PV preset	0: ABS PV preset invalid 0 to 1: At this point, "ABS PV" is stored in high-speed counter PV 1 (AR 00 to 01).		
	07		ABS No. of rotations read	0: No. of rotations data read from servo driver invalid 1: At the rise, SEN is output to servo, and multi-turn data is received at phase A input.		

7-8-10 Overview of Absolute Encoder Output Data Acquire

Behavior of the Servo Driver with an Absolute Encoder

The SEN signal being turned ON, the servo driver behaves in the following manner:

1. The servo driver transmits the state of the absolute encoder when the SEN is turned ON.
   The operation proceeds in the following order:
   a) Transmits the multi-turn data (how many revolutions rotary encoder made) with the serial method.
   b) Transmits the initial incremental pulse (difference between present position and origin) with phase-difference pulse output.
2. After transmitting the absolute value data, transmits the pulse train corresponding to the rotational displacement. (Transmits the same pulse as an incremental encoder)

Absolute Encoder Output Data Acquiring Method

To acquire the absolute encoder output data of the servo driver with the unit (CS1W-HCA12-V1), follow the procedure below:

■ **Step 1 (Required) “Various Settings”**

Setting "Pulse Input Method"

The pulse input method has to be set. It can be set in "pulse input method (DM 6605 bit 00 to 03)" in the unit setup area. It can be selected from the following 5 methods:

Phase-difference input with multiplications 1, 2, or 4, increment/decrement pulse input, and pulse + direction. Set this to the phase-difference input.

Setting "Input Pulse Frequency"

The input pulse frequency has to be set to 200 kHz. To do so, set "input pulse frequency (DM 6605 bit 08 to 11)" in the unit setup area to 1 Hex.

Setting "Counting Mode"

"High-speed counter 1 operating mode (DM 6605)" in the unit setup area has to be set. The mode for counting the encoder output has to be selected from the following:

- ABS linear (CW–) mode (DM 6605 bit 12 to 15: 2 Hex)

- ABS linear (CW+) mode (DM 6605 bit 12 to 15: 4 Hex)
- ABS ring mode (DM 6605 bit 12 to 15: 3 Hex)

Also, set "high-speed counter 1 operating mode (DM 6605)" in the unit setup area corresponding to the setting of reverse rotation mode on the servo driver.

Setting "ABS Resolution"

Set the number of pulses for the encoder's 1 revolution received from the servo driver.

Make sure to set the resolution considering both the servo driver's "encoder dividing rate setting" and the unit's "pulse input multiplication setting ("pulse input method" in the unit setup area) (DM 6605 bit 00 to 03)".

Ex) “On servo driver: dividing rate of 1000, on the unit: with multiplication of 4”: FA0 (4000)

■ **Step 2 (Required)**
“Acquiring the Data on the Encoder's Status at when the SEN Signal Is Turned ON”

Turn ON "ABS number of rotations read flag (AR 09 bit 07)" using the ladder program.

When it is turned ON, the SEN signal also turns ON (high level). (Leave it ON during operations as well as the RUN signal.) After a certain period has passed (servo's output is stabilized), turn ON "high-speed counter start flag (AR 09 bit 00)" using the ladder program. At the same time, the data on the encoder's status (multi-turn data) when the SEN signal was turned ON is received by serial data. After the serial data completes the reception of the multi-turn data, "ABS number of rotations read completed flag (AR 08 bit 05)" turns ON. If a reception error occurs at this point, "ABS number of rotations read completed flag (AR 08 bit 05)" and "ABS number of rotations acquire error flag" turns ON. In this case, the received data will be destroyed.

■ **Step 3 (as Needed)**
“Origin Compensation (ABS Offset Preset)”

Encoder's position at the time is defined as an origin using ABS offset preset function.

With ABS offset preset function, storing the present value that will be defined as an origin by computing "ABS number of rotations present value (AR 04 to 05) and the number of initial incremental pulses (AR 00 to 01)" to "ABS offset value (DM 6645/6646)"

To use ABS offset preset function, turn ON "ABS offset preset (AR 09 bit 05)".

Note When compensating an origin, start the operation after setting ABS offset value (DM 6645/6646) to 0. Use either the programming console or CX-Programmer to set DM 6645/6646 to 0.

To use ABS offset preset function, wait 30 to 50 ms after "ABS number of rotations read completed flag (AR08 bit 05)" is turned ON. Then, turn OFF "ABS offset preset flag (AR 09 bit 05)" once, and ON, then OFF again.

Note Make sure to execute ABS offset preset before the servo driver starts normal pulse outputs. Timings for turning ON ABS offset preset depends on encoder's resolution, etc. Adjust as needed corresponding to the system.

■ **Step 4 (Required)**
"ABS Present Value Preset"

Storing ABS present value in "high-speed counter present value 1 (AR 00 to 01)" using ABS present value preset function

Store "ABS present value" in "high-speed counter present value 1 (AR 00 to 01)" in advance using ABS present value preset function.

To use ABS present value preset function, turn OFF "ABS present value preset flag (AR 09 bit 06)" once, and ON, then OFF again.

■ **Step 5 (Required)**
"Operating Command to Servo Driver"

Turn ON "RUN signal output bit (servo lock)". Doing so will cause the servo driver to start operating. At the same time, the unit (model CS1W-HCA12-V1) starts receiving pulse trains corresponding to the rotational displacement and counting the number of pulses.

■ **Step 6 (Required)**
"Stopping Servo Driver"

Turn OFF "RUN signal output bit (servo lock)". Doing so will stop the servo driver. In addition, turn OFF "ABS number of rotations read flag (AR 09 bit 07)" and "high-speed counter start flag (AR 09 bit 00)". With these turned OFF, the unit will also stop operating and counting the pulse trains.

7-8-11 Timing Chart of the Functions Compatible with Servo Drivers with Absolute Encoders

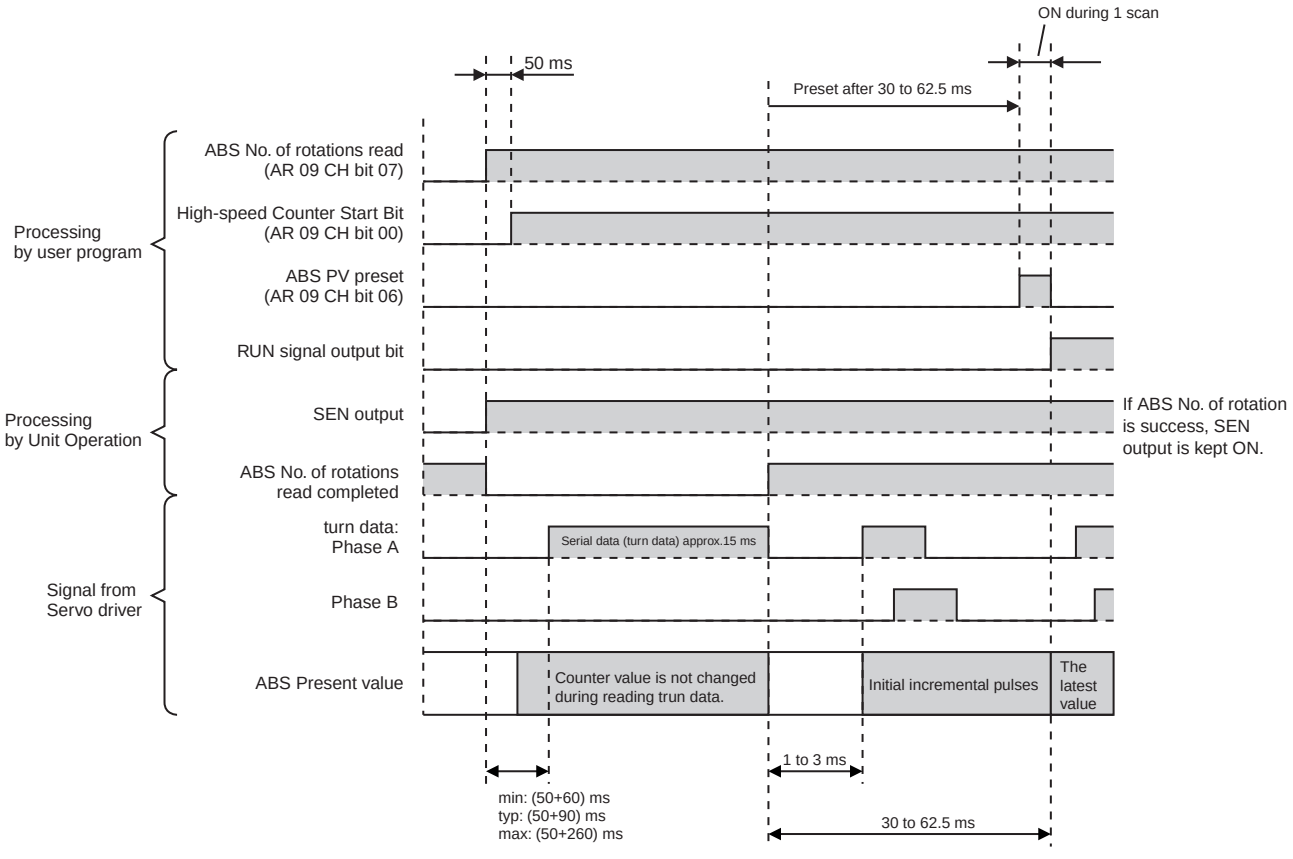

7-8-12 Sample Programs (with the Connection to OMRON's W Series Servo Driver)

Program Description

1. With the unit set to "monitor" mode, turning ON the bit 0.01 (ABS origin define) presets the ABS origin in DM 6645/6646.
2. With the unit set to "monitor" mode, turning ON the bit 0.00 (ABS servo operation start) presets the ABS present value in AR 00 to 01.

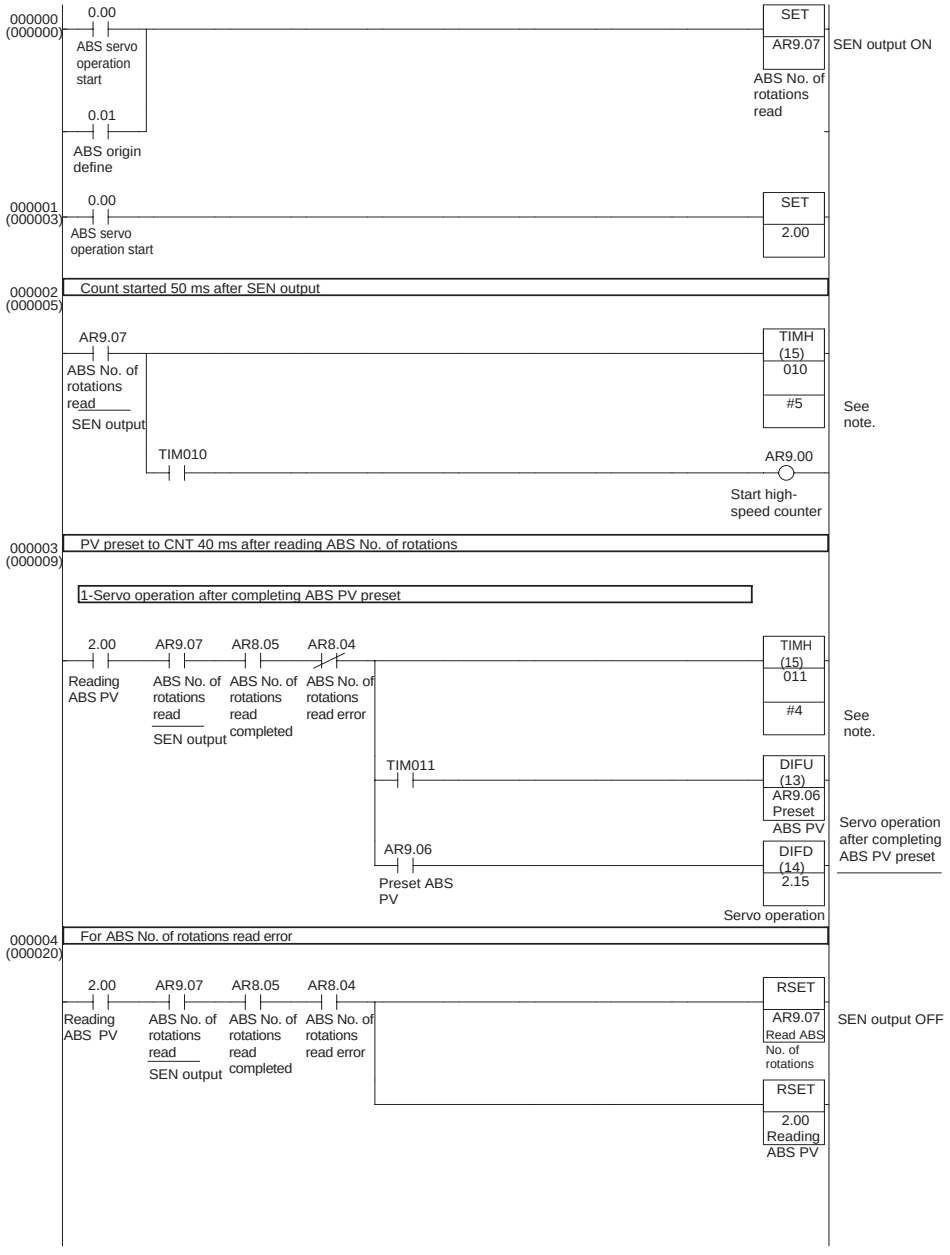

Note Adjust the timer value of TIMH instruction (10 ms timer) corresponding to the system (setting of absolute encoder's resolution, etc). When more precision is required, use TMHH instruction (1 ms timer).

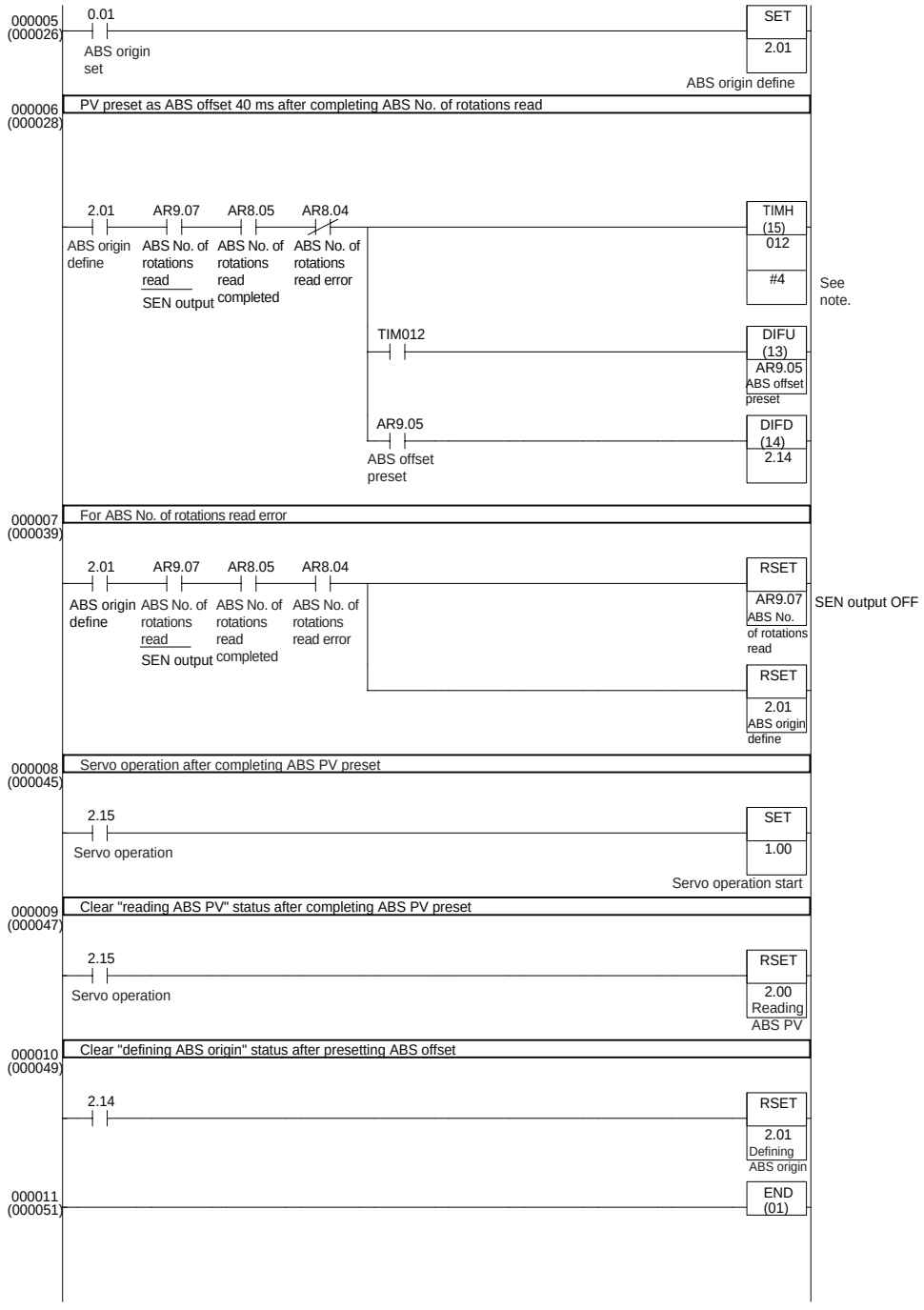

Note Adjust the timer value of TIMH instruction (10 ms timer) corresponding to the system (setting of absolute encoder's resolution, etc). When more precision is required, use TMHH instruction (1 ms timer).

7-9 Analog Input Functions

7-9-1 Applicable Models

Model numbers	Functions
CS1W-HCA12-V1	12 contact inputs, 8 contact outputs, 1 analog input, 1 pulse input, 2 analog outputs

7-9-2 Overview

This unit executes high-speed input of analog input signals (A/D conversion time: 50 μs).

One of five signal types for analog inputs, –10 to +10 V, 0 to 10 V, 0 to 5 V, 1 to 5 V, and 4 to 20 mA can be selected.

Analog input values are stored in AR 02 of the auxiliary memory bits on the unit. An analog input value at END refresh is stored as the input value. Additionally, analog input values can be compensated.

Using PRV instruction enables the unit to acquire the latest analog input value through immediate refresh method. With this function, inputting analog signals from a pressure sensor, position meter, or sensors that require high-speed input processing such as a displacement sensor/end-measuring sensor realizes pressure control, tension control, or control involving mechanical measurement (distortion/thickness/length) with comparatively lower cost and ease.

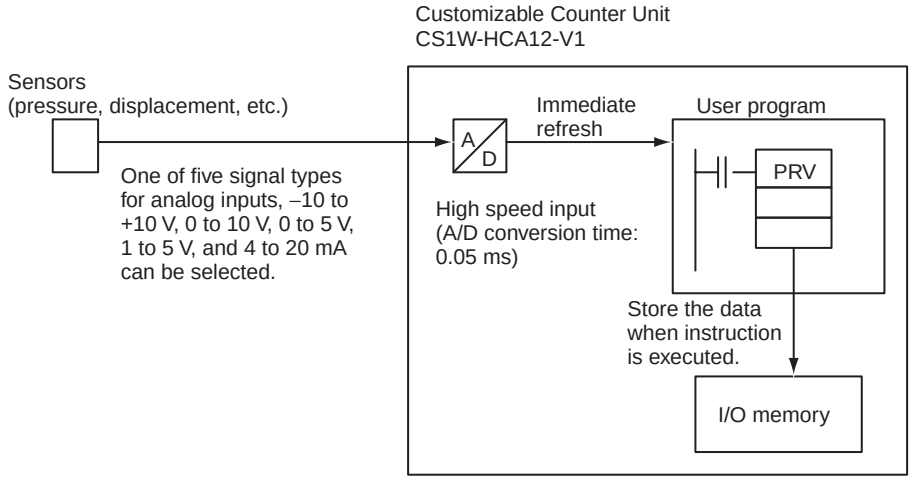

Note The analog input responsiveness of the CS1W-HCA12-V1 has been set comparatively higher for speeding up the processing. Because of this, the distortion of input signals caused by external disturbance may be detected sometimes. When using the unit in a place with a lot of noise, make sure to take measures against it. In addition, when using the analog input value of the unit, take measures against it also in the ladder program by executing the AVG instruction with END refresh method to provide a filtering process, etc.

7-9-3 Specification of Analog Input Functions

Item		Specification	
Input signals		Voltage inputs, current inputs	
No. of analog inputs		1 input	
Input signal ranges		Select from the followings in the unit setup area (DM 6612 (analog input range)): –10 to +10 V, 0 to 10 V, 0 to 5 V, 1 to 5 V, or 4 to 20 mA	
A/D conversion time		50 μs	
Input response time		1.5 ms or less (*)	
Resolution		–10 to +10 V:1/16,000 (14 bits) 0 to 10 V: 1/8,000 (13 bits) 0 to 5 V: 1/4,000 (12 bits) 1 to 5 V: 1/4,000 (12 bits) 4 to 20 mA: 1/4,000 (12 bits)	
Analog input refresh method		Analog input value can be acquired by either of the following methods: • The data in AR 02, which is stored after execution of END instruction, of auxiliary memory bits on the unit is acquired. (END refresh method) • Acquires the data by executing PRV instruction. (Immediate refresh method with instruction)	
Analog input value storage area		AR 02 of auxiliary memory bits on the unit With the immediate refresh method with instruction selected, an analog input value at the time can be acquired by executing PRV instruction.	
Overall accuracy		Voltage input:	Current input:
		±0.2% (23±2°C) ±0.4% (0 to 55°C)	±0.4% (23±2°C) ±0.6% (0 to 55°C)
Function	Offset/gain adjustment	It is possible to proofread and correct inputs corresponding to the connected devices. In "program" mode, specify an offset or gain value with adjustment enable flag (AR 18 bit 00, AR 18 bit 03) ON. Transmitting inputs that are to be an offset or a gain value from a device, monitoring adjusting value monitor bits (AR 19/20) from a peripheral enables proofreading and correcting. Additionally, specifying the number of times of an average value in AR 23 enables monitoring with an averaged offset or an averaged gain value.	

Note As a reference, the characteristic of the input response (step response) when an external input signal is modified step-wise within 10 V range is as follows:

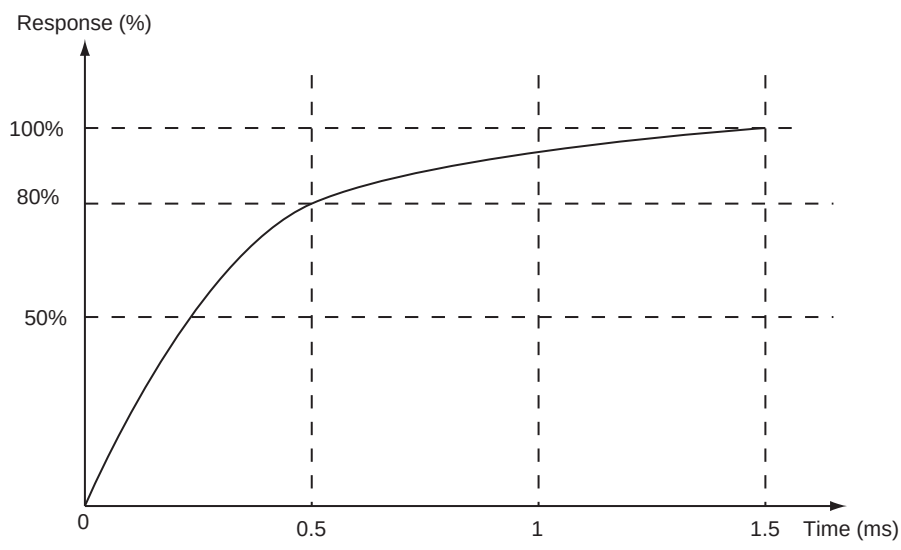

7-9-4 Related Areas

Unit Setup Area

Address	Bits	Function	Details	
DM 6612	00 to 07	Analog input	Analog input range	00 Hex: –10 to +10 V 01 Hex: 0 to 10 V 02 Hex: 1 to 5 V (4 to 20 mA) 03 Hex: 0 to 5 V
DM 6630	08 to 15	Analog inputs	Analog input refresh method	00 Hex: END refresh 01 Hex: Immediate refresh using PRV instruction
DM 6631	00 to 15	For both analog outputs 1 and 2	Adjustment mode password	5A5A Hex: Adjustment mode enabled Setting other than 5A5A: Adjustment mode disabled

Auxiliary Memory Area

Address	Bits	Function	Details		Controlled by	Forced set/reset
AR 02	00 to 15	Analog input value	Analog input	At END refresh or immediate refresh with instructions, the value input to analog input port 1 is stored with the following 4-digit hexadecimal: • With 0 to 10 V: FE70 to 20D0 Hex • With 0 to 5 V, 1 to 5 V: FF38 to 1068 Hex • With –10 to +10 V: DDA0 to 2260 Hex	Unit	Disabled
AR 03	00	Analog input status	User adjustment	0: No adjustment 1: Adjusted by user		
	08		Default adjustment error	0: No error 1: Error (checked at powering ON)		
	09		User adjustment data error	0: No error 1: Error (checked at powering ON)		

Address	Bits	Function	Details			Controlled by	Forced set/reset
AR 18	00	Adjustment mode command (valid when DM6631 = 5A5A Hex)	Analog Input/Analog Output 1	Adjustment enable	ON: Adjustment invalid OFF: Adjustment valid At the rise of this bit, an initial value (offset or gain) corresponding to I/O signal ranges is transferred to AR 19/20 (adjustment value monitor bits).	User	Enabled
	01		Analog Output 2				
	02		Analog Input/Analog Output 1/2	Adjustment mode specification	OFF: Offset adjustment ON: Gain adjustment		
	03		Analog Input/Analog Output 1	Adjust object specification	OFF: Analog output ON: Analog input		
	06		Analog Input/Analog Output 1/2	Adjustment value clear (to default data)	OFF to ON: the data is put back to the factory default setting.		
	07		Analog Input/Analog output 1/2	Adjustment value set (registration)	OFF to ON: the value in 16-bit resolution of AR 19/20 (adjustment value monitor bits) is stored in Flash memory. The value is used in the next operation.		
	08		Analog Input/Analog output 1/2	Adjusting operation error	This is turned ON by faulty operations. (Ex: Turning ON both adjustment enable flags for analog input and output at the same time, etc)	Unit	
	15		Analog Input/Analog Output 1/2	Starting adjustment mode	Stays ON in adjustment mode. (when DM6631 = 5A5A Hex)		

Address	Bits	Function	Details			Controlled by	Forced set/reset
AR 19	00 to 15	Adjustment mode command (valid when DM6631 = 5A5A Hex)	Analog Input	Offset value	Under the condition of adjustment enable flag (AR 08 bit 00/03) being ON, analog input offset value can be monitored here. –10 to +10 V: F556 to AAA Hex 0 to 10 V: FAAB to 555 Hex 0 to 5 V: FD56 to 2AA Hex 1 to 5 V: 888 to CCC Hex	Unit	Disabled
AR 20	00 to 15			Gain value	Under the condition of adjustment enable flag (AR 08 bit 00/03, AR 08 bit 02) being ON, analog input gain value can be monitored here. –10 to +10 V: 7554 to 5FFF Hex 0 to 10 V: 6FFF to 6554 Hex 0 to 5 V: 37FF to 32AA Hex 1 to 5 V: 3777 to 3333 Hex		
AR 21	00 to 15	(Reserved by system.)				---	
AR 22	00 to 15						
AR 23	00 to 15	Adjustment mode command (valid when DM6631 = 5A5A Hex)	Analog Input	Average No. of times in adjustment mode	This indicates the number of times of an average value specified for offset/gain value monitor in adjustment mode. Average No. of times: 0000 to 0040 Hex (0 to 64 times) Set this value before turning ON adjustment enable flag.	User	

7-9-5 Applicable Instructions

■ **With END Refresh Method**

The data of analog input value (AR 02) is read using the MOV instruction, etc.

■ **With Immediate Refresh Method**

The data is acquired with the PRV instruction.

(@) PRV	
P	P: Output port (003: Analog input)
C	C: Control specification (000: Present value read)
D	D: Present value storage first word

7-9-6 A/D Conversion Value

When a signal exceeding the ranges indicated below is input, the conversion value is processed as it is. However, inputting that kind of signals will result in breakdown of the unit or malfunctions. Therefore, do not operate in such a manner.

■ **Signal range: 10 V**

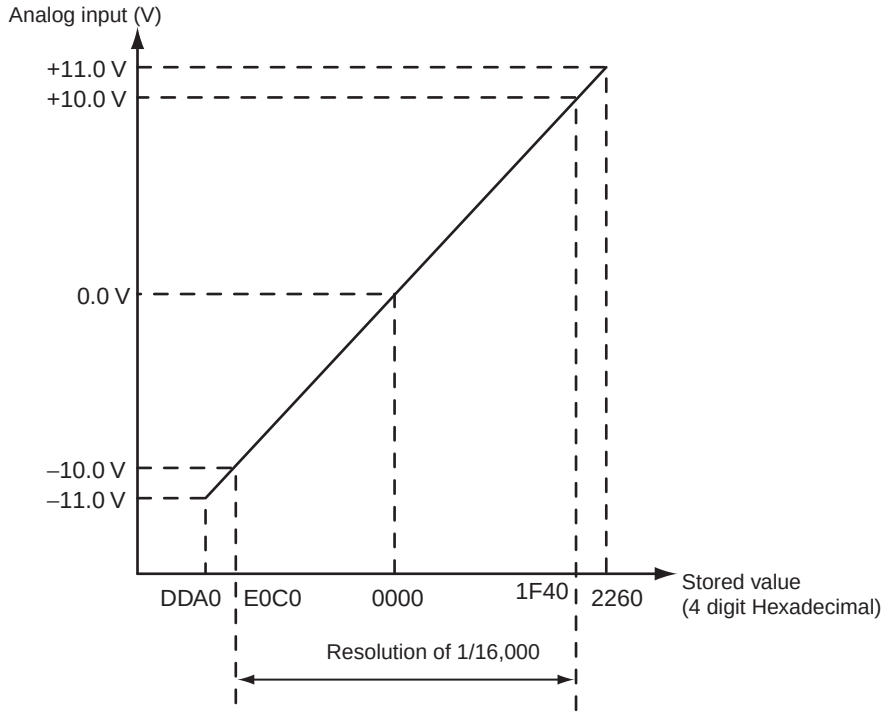

■ **Signal range: 0 to 10 V**

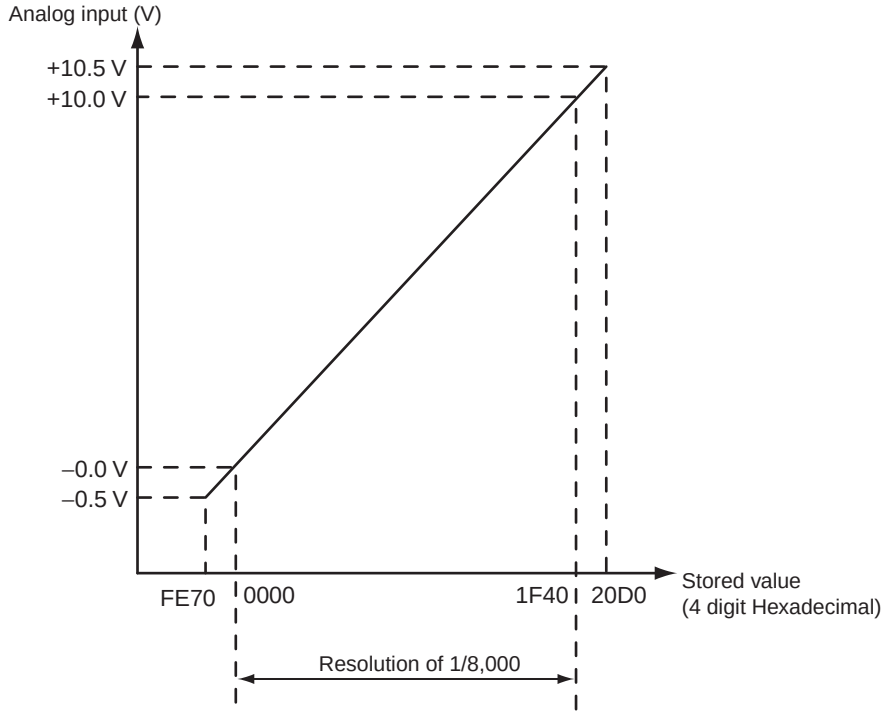

■ **Signal range: 1 to 5 V/4 to 20 mA**

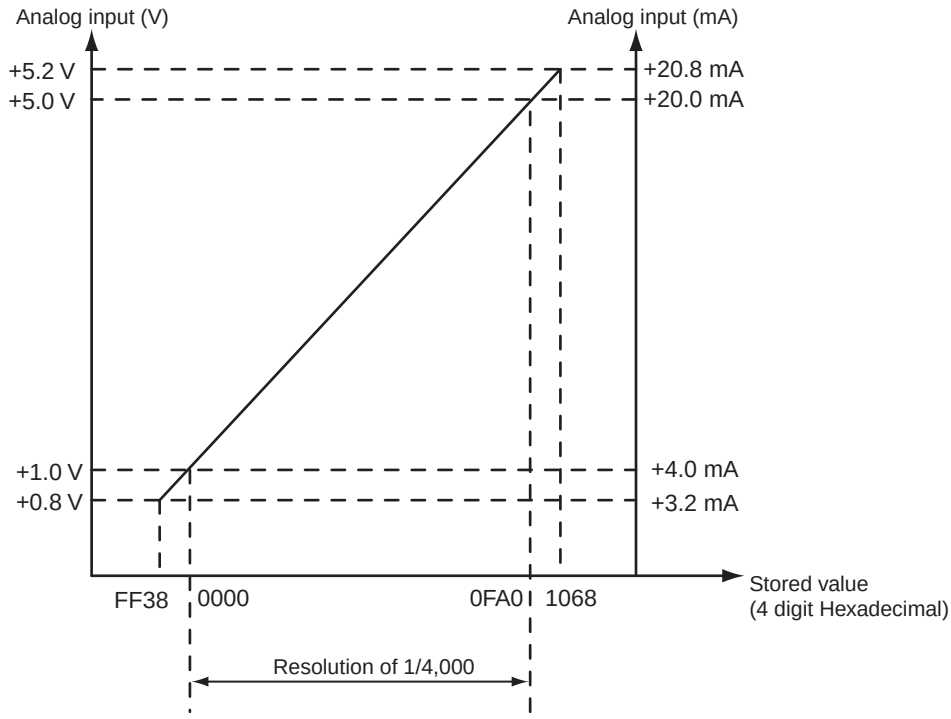

■ **Signal range: 0 to 5 V**

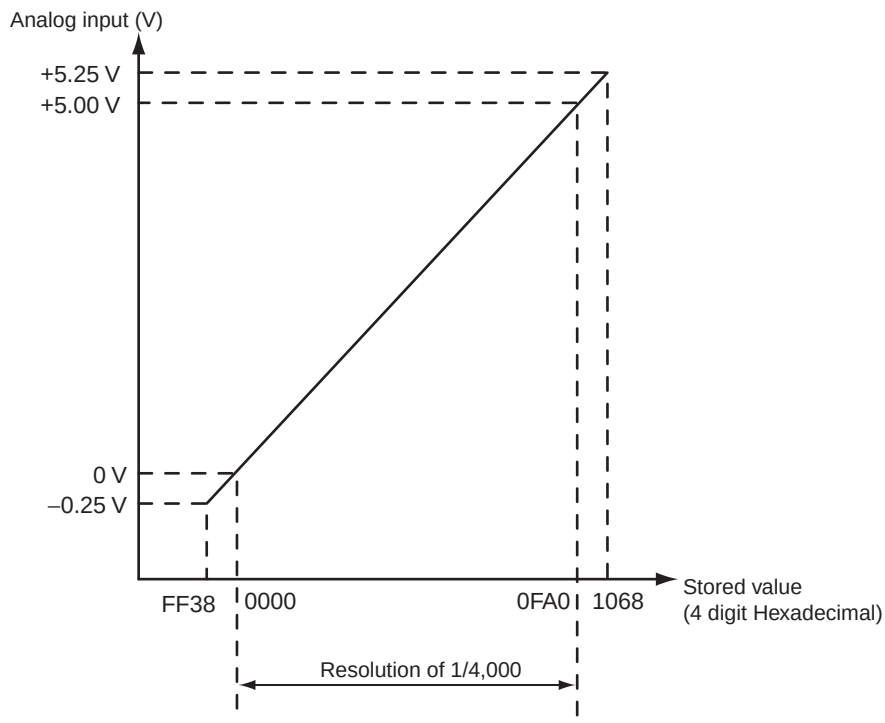

7-10 Virtual Pulse Output Function (-V1 unit with lot No. 0209__or later only)

7-10-1 Applicable Models

Model numbers	Functions
CS1W-HCP22-V1	12 contact inputs, 8 contact outputs, 2 pulse inputs, 2 pulse outputs
CS1W-HCA22-V1	12 contact inputs, 8 contact outputs, 2 pulse inputs, 2 analog outputs
CS1W-HCA12-V1	12 contact inputs, 8 contact outputs, 1 analog input, 1 pulse input, 2 analog outputs

7-10-2 Overview

PLS2 instruction enables the execution of virtual pulse output with trapezoidal acceleration/deceleration (virtual pulse output mode).

PLS2 instruction executes the pulse output with trapezoidal acceleration/deceleration internally. At the same time, it integrates (counts) the pulse amount (an area) for the trapezoid internally.

With this function, the "virtual axis position" defined by the internal pulse counts can be applied to various applications.

Ex 1) Position/speed Control Corresponding to Virtual Axis (Electronic Cam Operation)

The internal pulse counts being defined as a virtual axis, it is possible to execute the electronic cam operation (position and speed control corresponding to the virtual axis angle) based on the approximated curve corresponding to the virtual axis.

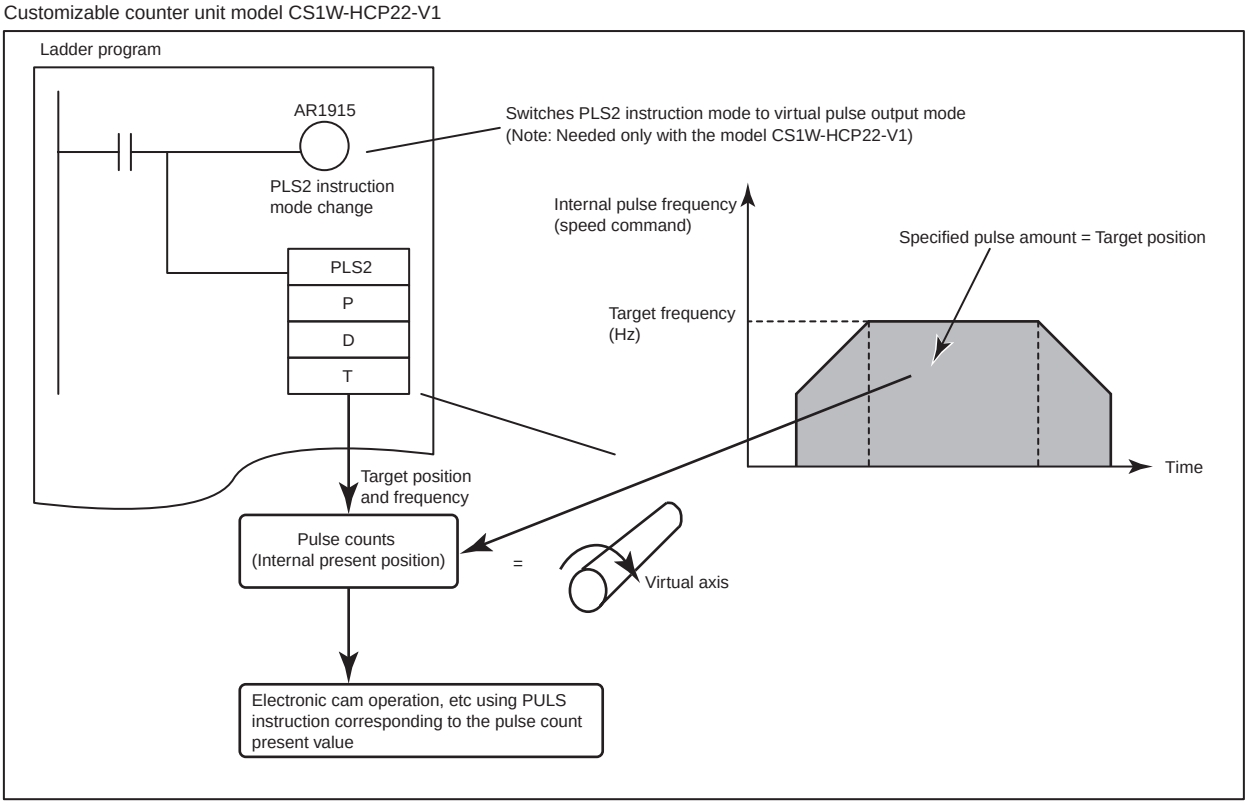

Ex 2) Electronic Gear Corresponding to the Calculated Speed of the Virtual Axis (Pulse Synchronous Control)

The internal pulse counts being defined as a virtual axis, the unit calculates the speed of the virtual axis with such a ladder program. The value (speed) with a certain multiplication can be output as a pulse (Electronic gear function). This enables the synchronous control based on a virtual axis.

Ex 3) Position Control in Semi-closed Loop on Servo Motor Driver of Analog Input Type

Arranging a ladder program that creates an error counter, based on the internal pulse counts and feed back signals from the servo driver, enables the position control in semi-closed loop method on the servo motor driver of analog input type.

7-10-3 PLS2 Instruction (Use in Virtual Pulse Output Function)

Overview

Virtual pulse output with trapezoidal acceleration/deceleration can be executed with PLS2. A target position is specified with the amount of pulses or an absolute position while a target speed with the number of pulses per second (kHz), both in PLS2's operand. PLS2 instruction internally creates the amount of pulse output while the input condition is ON, and integrates (counts) the pulse amount (an area) for the trapezoid.

Explanation of Operation

PLS2	
P	P: Port specification
D	D: Output specification (Set this to 000)
T	T: First word of the table to be set

Content of P (Port Specification)

Setting does not affect operations. (000, 001, or 002 can be set.)

Content of D (Output Specification)

Setting does not affect operations. (Either of 000 or 001 can be set.)

T (First Word of the Table to Be Set)

Address		Name	Description	Setting range	Setting/ monitor
T		Internal pulse counts (8-digit hexadecimal)	The present value of internal pulse counts is stored here.	Relative mode: 0000 0000 to FFFF FFFF Absolute mode: 8000 0000 to 7FFF FFFF	Monitor
T+1					
T+2	Bit 15	Virtual pulse output status	Whether virtual pulse is being output or not is stored here.	OFF: Pulse output stopped ON: Pulse being output	
	Bit 08		Direction of virtual pulse currently being output is stored here.	OFF: CW ON: CCW	
	Bit 07		Whether virtual pulse output is internally being counted or not is stored here.	OFF: Pulse being counted ON: Target position reached (Counting stopped)	
	Bit 06		When the target position was reached is stored here.	OFF: Target value was reached after ending deceleration ON: Target value was reached before ending deceleration	
	Bit 00		Speed status of virtual pulse output is stored here.	OFF: Constant speed ON: Accelerating/decelerating	
T+3		Present speed (4-digit hexadecimal)	Frequency of virtual pulse outputs is stored here.	0000 to 00C8 (0 to 200 kHz)	

Address		Name	Description	Setting range	Setting/ monitor
T+4		Target position (8-digit hexadecimal)	Set the number of virtual output pulses here.	Relative mode: 0000 0000 to FFFF FFFF Absolute mode: 8000 0000 to 7FFF FFFF	Setting
T+5					
T+6		Target frequency (4-digit BCD)	Set the target frequency of virtual pulses here.	0001 to 0200 (1 to 200 kHz)	
T+7		Start frequency (4-digit BCD)	Set the start frequency of virtual pulses here.	0000 to 0200 (0 to 200 kHz)	
T+8		Acceleration (4-digit BCD)	Set the acceleration of virtual pulses here.	0001 to 0200 (1 to 200 kHz)	
T+9		Deceleration (4-digit BCD)	Set the deceleration of virtual pulses here.	0001 to 0200 (1 to 200 kHz)	
T+10	Bit 00 to 07	Operation cycle of internal pulse counts	Specify cycle (reference for operating internal pulse counts) for updating speed. This decides the pulse counts for 1 cycle.	00 Hex: 2 ms 01 Hex: 1 ms 02 Hex: 0.5 ms	
	Bit 08 to 15	Relative/absolute selection	Select either absolute pulse output or relative pulse output.	00 Hex: Relative 01 Hex: Absolute	
T11 to 16		Work area for operation	Used by the system.		

- PLS2 cannot be used as a differentiated instruction.
- PLS2 is started at the rise of the input condition. If the input remains ON continuously, the virtual pulse stays being output continuously until the target position is reached. Once the target position is reached, the virtual pulse output is stopped. Additionally, if the input condition turns OFF during the output, the output is stopped simultaneously.
- With the model CS1W-HCP22-V1, since it is required to switch from the normal mode (executes pulse output to external device), PLS2 instruction can be executed only after bit 15 of AR 19 (PLS2 instruction mode change) is set to 1 (virtual pulse output mode). (With the models CS1W-HCA22-V1/-HCA12-V1, this operation is not required.)

Address	Description
AR 19 bit 15	PLS2 instruction mode change (valid only with model CS1W-HCP22-V1) OFF: Normal mode (outputs pulse to external device) ON: Virtual pulse output mode (executes virtual pulse output, without actual pulse output to external device)

- Whether the virtual output pulses are counted relatively or absolutely can be selected in PLS2's operand.
- With relative virtual output selected, the internal pulse counter starts counting after initializing the internal pulse counts to 0 at starting up the instruction.
- With absolute virtual output selected, the count is held at starting up the instruction. The internal counter then counts the virtual pulse output based on the held count.
- The internal pulse counts are refreshed at every cycle specified in operation cycle of internal pulse counts (2 ms, 1 ms, or 0.5 ms) under the condition that the cycle time is constant. When the cycle time does not match with the specified operation cycle of pulse counts, a margin of error for the difference results. For higher accuracy of the internal pulse counts, use the constant cycle time function to make the operation cycle and the cycle

time match with each other. (Set the constant cycle time in DM 6619 of the unit setup area.)

- When specified target position, target frequency, and acceleration/deceleration do not lead to the trapezoidal control, the system will operate in the following manners to correct the conditions automatically and execute operations:
  1) Even out the acceleration and deceleration (symmetrical trapezoid).
  2) Start deceleration of the same ratio as the acceleration at the point where the half of the target pulse amount has been output (triangle control).

Note Between the normal and virtual pulse output modes, the specifications of control operations based on the settings that do not lead to trapezoidal control (triangle control, etc. instead) differ.

7-10-4 Application Example

Position/Speed Control for the Virtual Axis (HCP22-V1)

Defining internal pulse counts as a virtual axis position, the unit can execute simplified electronic cam operations based on approximated curves corresponding to the virtual axis position.

First, execute PLS2 instruction in the virtual pulse output mode to obtain an internal pulse counts. The internal pulse count is read at every cycle. The target position or speed of PULS instruction is modified through basic math or APR instruction based on the read counts. PULS instruction (electronic cam mode) is similarly executed at every cycle.

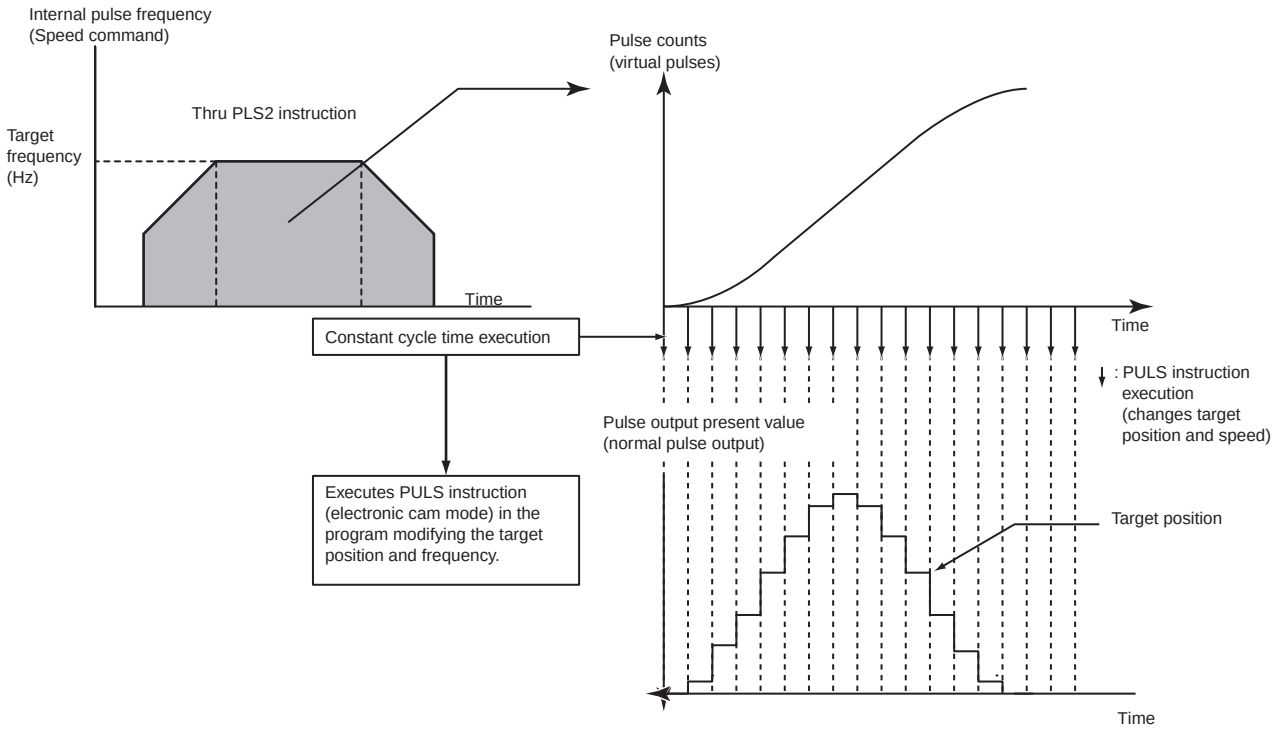

Making pulse output 1 and 2 execute the electronic cam control synchronously for the same virtual axis enables the simplified locus control.

7-11 Constant Cycle Time Over Clear Function

7-11-1 Applicable Models

Model numbers	Functions
CS1W-HIO01-V1	12 contact inputs, 8 contact outputs
CS1W-HCP22-V1	12 contact inputs, 8 contact outputs, 2 pulse inputs, 2 pulse outputs
CS1W-HCA22-V1	12 contact inputs, 8 contact outputs, 2 pulse inputs, 2 analog outputs
CS1W-HCA12-V1	12 contact inputs, 8 contact outputs, 1 analog input, 1 pulse input, 2 analog outputs

7-11-2 Details

According to the existing specification, once the cycle time exceeds the "constant cycle time value" with the use of constant cycle time function, the cycle time after the point will not be stable and move around being affected by the actual cycle time required for operations.

Given this factor, a function, which can validate the constant cycle time function again by turning ON a certain bit (constant cycle time over clear: SR 252 bit 07) even though the set cycle time is exceeded once, is added. (Constant Cycle Time Over Clear function)

This function can validates the constant cycle time again to prevent the fluctuation of I/O processing time through a user program even when the temporarily elongated cycle time due to various initial processing at starting a user program operation in the unit exceeds the "constant cycle time value".

According to Existing Specification

When the actual cycle time exceeds the set constant cycle time, the function is canceled and the actual cycle time will fluctuate.

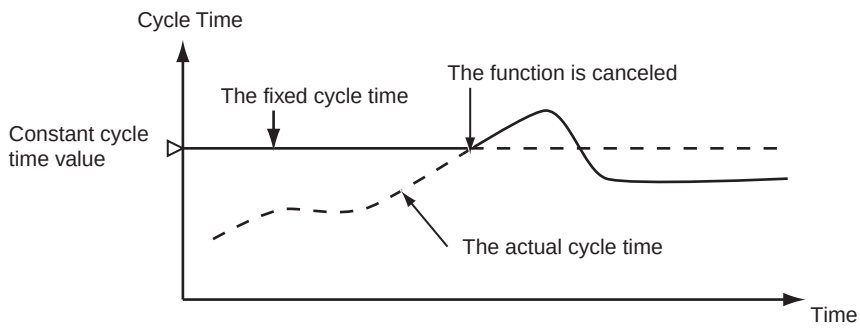

Constant Cycle Time Over Clear Function

Through turning the constant cycle time over reset bit OFF ON OFF, the constant cycle time function will be valid again.

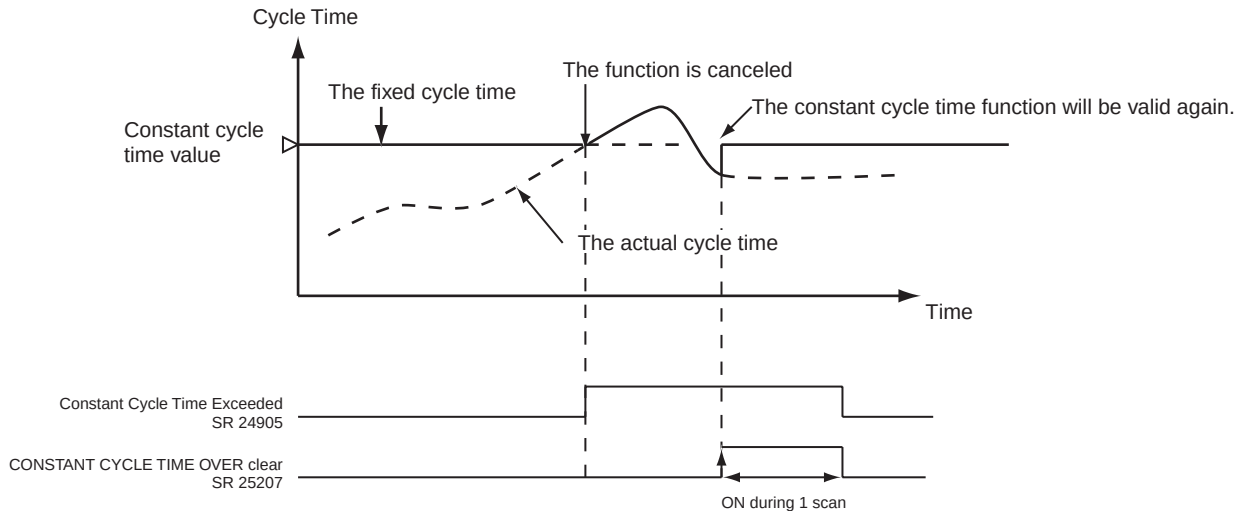

7-11-3 Special Auxiliary Bit

Address	Bits	Function	Controlled by
SR 252	07	CONSTANT CYCLE TIME OVER clear 0 to 1: CONSTANT CYCLE TIME OVER clear	User

7-12 Ladder Library Function

7-12-1 Applicable Models

Model numbers	Functions
CS1W-HIO01-V1	12 contact inputs, 8 contact outputs
CS1W-HCP22-V1	12 contact inputs, 8 contact outputs, 2 pulse inputs, 2 pulse outputs
CS1W-HCA22-V1	12 contact inputs, 8 contact outputs, 2 pulse inputs, 2 analog outputs
CS1W-HCA12-V1	12 contact inputs, 8 contact outputs, 1 analog input, 1 pulse input, 2 analog outputs

7-12-2 Overview

These units can encapsulate an entire program or partial programs to save it to the Flash memory in the unit. This function is called "Ladder library function".

The encapsulated program is called a "Ladder library".

With this function, either "partial programs (subroutine program group)" or an "entire ladder program" can be encapsulated as a ladder library.

The encapsulated program "ladder library" can be executed in the following 2 modes:

MCRO Mode

In this mode, partial programs (subroutine program group) is read and executed as a "ladder library", that is to say, treated as if it is an applied instruction in the main program.

Boot Mode

In this mode, an entire ladder program is read at starting an operation and executed as a "ladder library".

■ Encapsulating Partial Programs (Subroutine Program Group) as a Ladder Library

Creating a Ladder Library

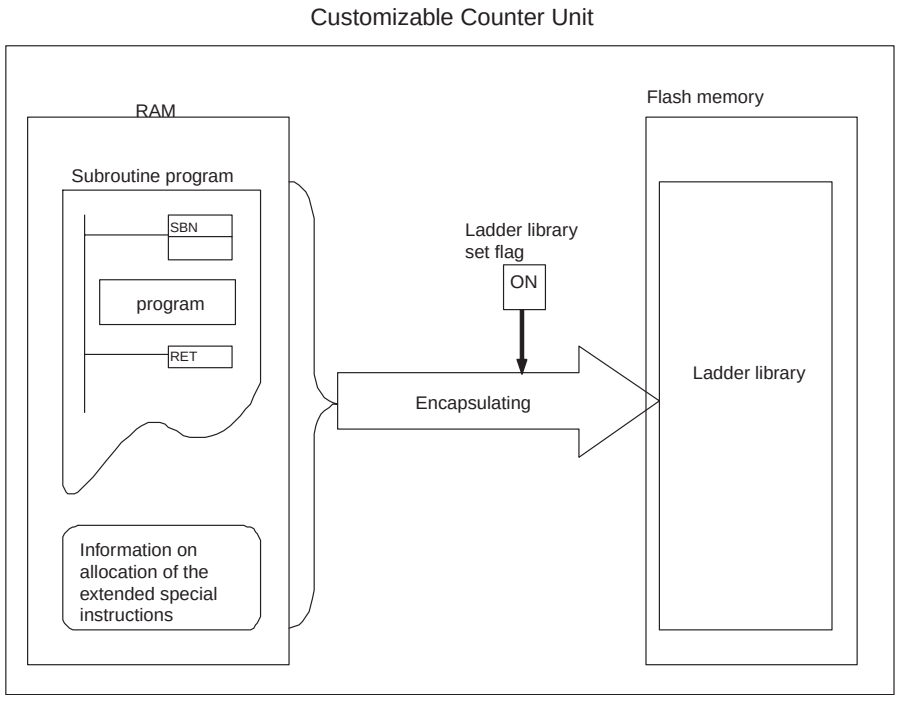

Executing the Ladder Library

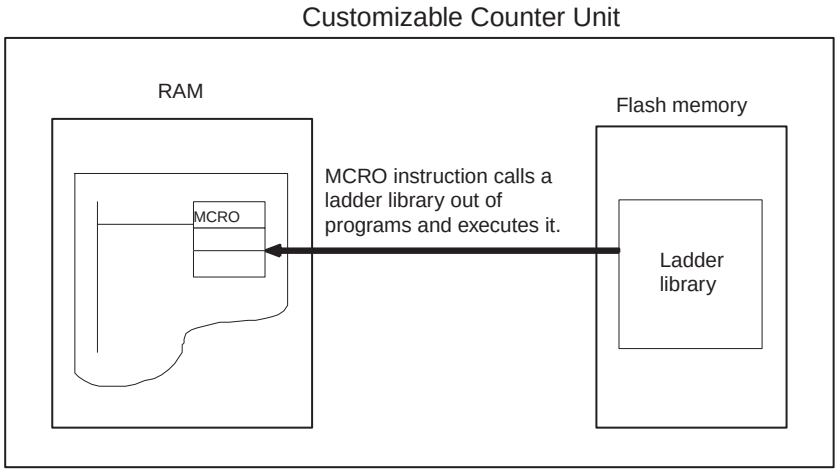

■ **Encapsulating an Entire Program as a lAdder Library**

Creating a Ladder Library

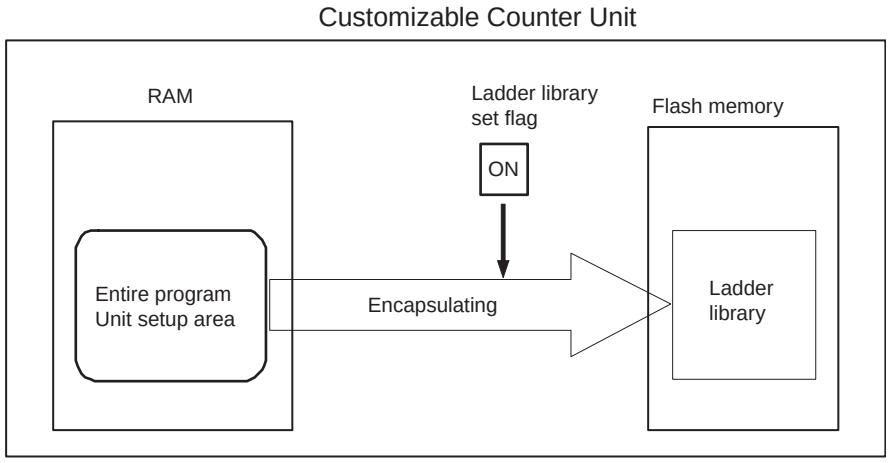

Executing the Ladder Library

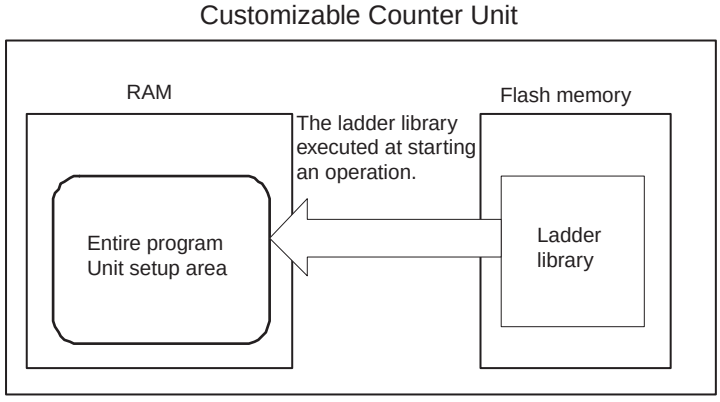

7-12-3 Features of the "Ladder Library"

The ladder library has the following features:

- In encapsulating ladder programs as a ladder library, the objects compiled with RUN initials are saved to the Flash memory.
- The ladder software assets can be protected from third parties. The "Ladder library" cannot be read from a CX-Programmer or a programming console. Therefore, it is possible to hide the control process in ladder programs.
- In executing the functions with a ladder software, it feels as if executing functions built-in in the unit beforehand (program-less operations).
- The ladder library is saved to the Flash memory in the unit.
- The main program can give data to the ladder library. As well as subroutine programs using the normal MCRO instruction, the same functions as the subroutine call with arguments using argument area for MCRO instruction (SR 220 to 224) and returned value area for MCRO instruction (SR 225 to 229) has are available.

Note To release the ladder library mode, set "ladder library execution mode (DM 6624)" of the unit setup area to 0000 Hex and turn the power OFF once, then ON again, or restart the unit.

7-12-4 Creating a Ladder Library

Procedure for Creating a Ladder Library

Follow the procedure below to create a "ladder library". Make sure to start the procedure with erasing the existing ladder library in the unit:

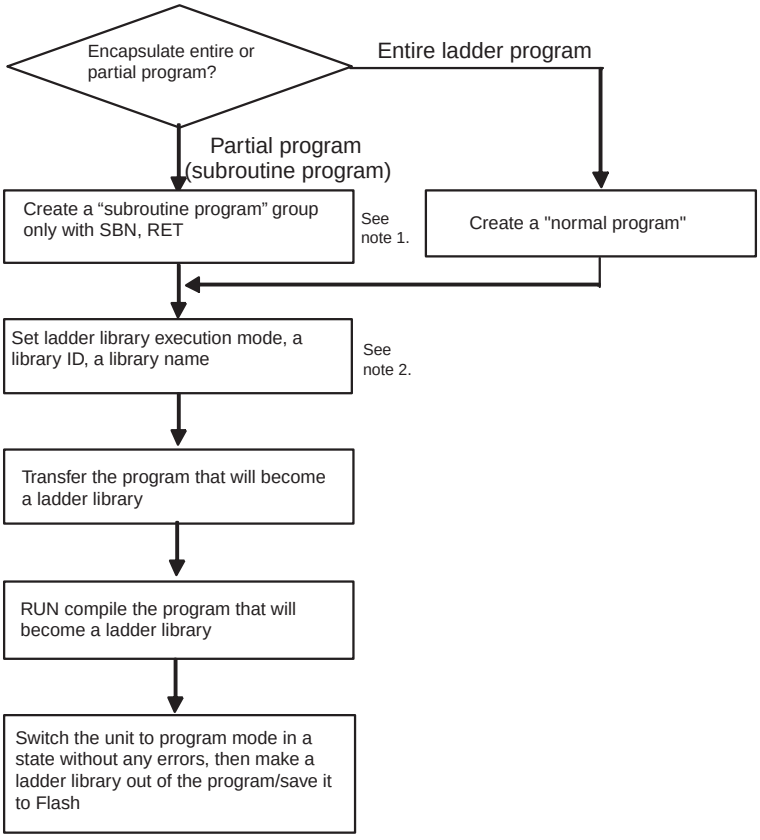

Note

1. END instruction is required at the end of the program.
2. When creating a ladder library, make sure to set the unit to the normal execution mode. To do so, set "Enable high-speed execution (DM 6615 bit 00 to 15)" of the unit setup area to other than 5A5A.

Step 1. Selecting a Program that Will Become a Ladder Library

Decide which program will be made a ladder library.

The program creating method varies depending on whether the encapsulated program is an "entire program" or "partial programs (subroutine program group)".

Additionally, only 1 ladder library of either an "entire program" or "partial programs (subroutine program group)" can be created. For instance, a ladder library of "partial programs (subroutine program group)" cannot be added and saved to the Flash memory after a ladder library of an "entire program" has been already saved to the Flash.

Step 2. Creating a Program that Will Become a Ladder Library

To Create a Ladder Library with an "Entire Ladder Program"

Create a normal ladder program. In creating a ladder library with an "entire program", subroutines can be used in the ladder program.

To Create a Ladder Library with "Partial Programs (Subroutine Program Group)"

As shown below, create a "program (subroutine program) starting with SBN and ending with RET and END" that can be executed in this unit.

Additionally, it is possible to create a ladder library with multiple subroutine programs at once.

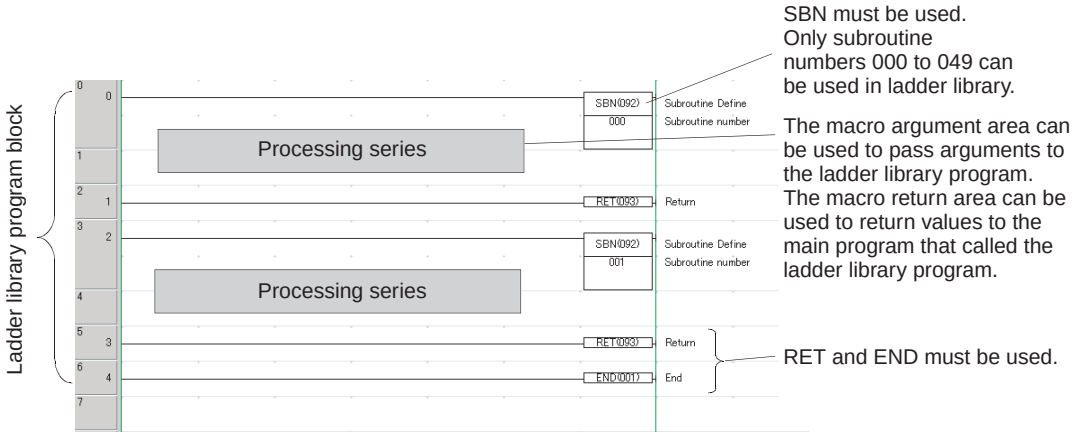

Restrictions in Creating Ladder Libraries

The following restrictions will apply in creating ladder libraries:

- The ladder library already created (saved to the Flash memory) cannot be edited.
- In creating a ladder library with "partial programs (subroutine program group)", the maximum number of storages for the ladder library is 50 (up to 50 subroutine programs). With an "entire program", only 1 ladder library can be created.
- Ladder libraries cannot be created in the high-speed execution mode (unit setup area (DM 6615 = 5A5A Hex)). Make sure to create ladder libraries in the normal execution mode (unit setup area (DM 6615 = other than 5A5A Hex)).
- When creating a ladder library with "partial programs (subroutine program group)", it is not possible to use the subroutines within the ladder library. A memory error will occur in the process of creating the library. On the contrary, it is possible to use the subroutines within the subroutines when creating a ladder library with an "entire program".
- When creating a ladder library with "partial programs (subroutine program group)", the programs cannot contain the following instructions. A memory error will occur in the process of creating a ladder library with the program containing them:
  DIFD instruction, SBS instruction, MCRO instruction
- When creating a main program to call a ladder library with CX-Programmer, prepare a dummy subroutine program corresponding to the subroutine No. specified by MCRO instruction in the main program (the same procedure as in starting an external interrupting task of CPU unit). Without the dummy, a compile error will occur at transferring the program. Meanwhile, a dummy subroutine is not needed when creating the main program directly with the programming console.

Step 3. Setting Ladder Library Execution Mode, a Ladder Library ID, and a Ladder Library Name

- Decide the method of executing a ladder library.
  The ladder library executing method can be set in the following unit setup area:

Item	Unit setup area	Description
Ladder library execution mode	DM 6624	Specify either "Boot mode execution" where a ladder library stored in the Flash is opened and executed at starting an operation, or "execution with MCRO instruction" where a ladder library is called by MCRO subroutine and used. Other than 5A5A, A5A5: Ladder library not used 5A5A Hex: Boot mode A5A5 Hex: Execution with MCRO instruction

- Put a ladder library ID and name on what will be a ladder library.
  To set them, store a desired ID and name in the following unit setup area before creating a ladder library:

Item	Unit setup area	Data format
Ladder library ID	DM 6625	0000 to FFFF Hex
Ladder library name	DM 6626 to DM6629	ASCII code (max. of 8 characters)

Ladder library ID is used to give control over the backup to the memory card of CPU unit. See *Back Up Function* on page 175 for details.

Step 4. Transferring the Program that Will Become a Ladder Library

1. Set the unit to "program" mode.
2. Transfer the created program and unit setup area to the unit

Step 5. Compiling the Program that Will Be a Ladder Library

Set the unit to "RUN" or "Monitor" mode and compile the program once.

Step 6. Program Becoming a Ladder Library/Saving to the Flash Memory

The program currently being executed is converted to a ladder library and the library is saved to the Flash memory. Follow the procedure below:

1. Set the unit to "program" mode. (No error should be present.)
2. Turn ON "ladder library set flag (SR 252 bit 15)". When it is turned ON, the program created on Step 2 is saved to the Flash memory as a "ladder library".

7-12-5 Erasing a Ladder Library

Follow the procedure below to erase a ladder library:

1. Set "ladder library execution mode (DM 6624)" of the unit setup area to 0000 Hex and turn the power OFF once, then ON again, or restart the unit.
2. Set the unit to "program" mode.
3. Turn ON "ladder library set flag (SR 252 bit 15)".
4. When "ladder library set flag (SR 252 bit 15)" turns OFF, erasing the ladder library is complete.

7-12-6 Executing a Ladder Library

The method for executing a ladder library varies depending on whether the ladder library has been created with either an "entire program" or "partial programs (subroutine program group)".

When a ladder library has been created with an "entire program", Boot mode (executed at starting an operation) is used to execute the library.

When a ladder library has been created with "partial programs (subroutine program group)", MCRO mode (called and executed with MCRO instruction) is used to execute the library.

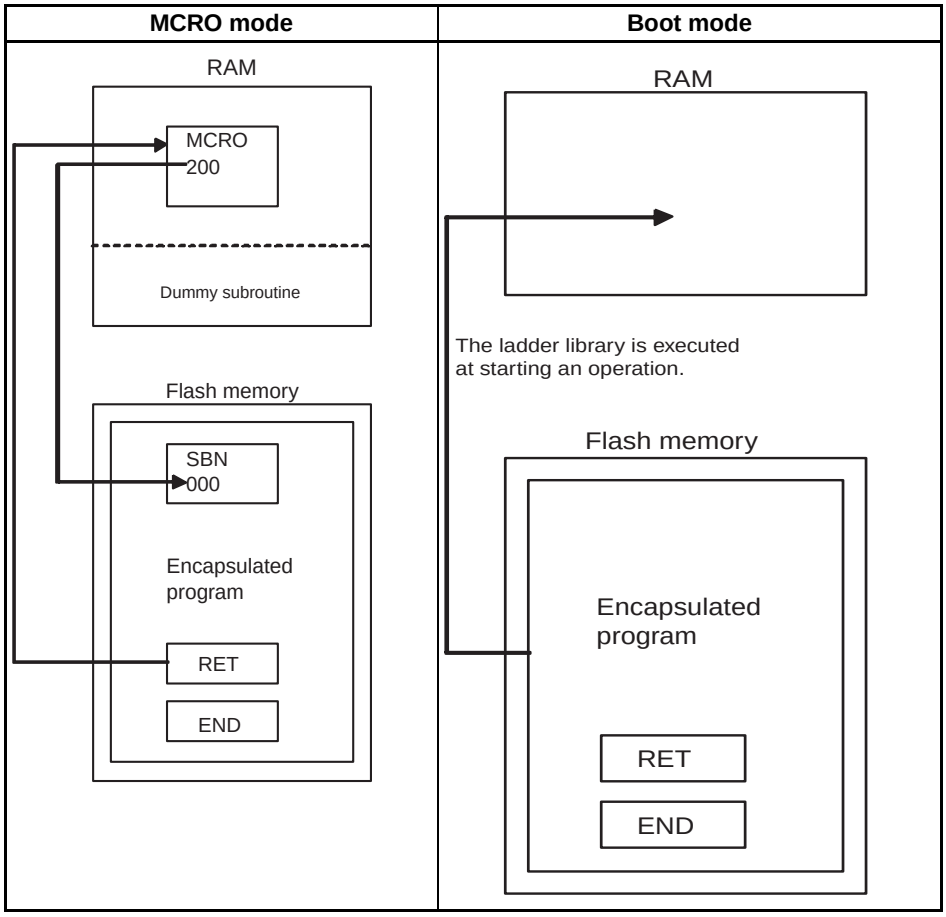

Execution in Boot Mode

The ladder library stored in the Flash memory is opened and executed at starting an operation.

Follow the procedure below to execute a ladder library in Boot mode:

1. Set the unit to "program" mode.
2. Set "ladder library execution mode (DM 6624)" of the unit setup area in the unit to 5A5A Hex.
3. Set the unit to "RUN" mode.

Execution in MCRO Mode

MCRO instruction calls a ladder library out of programs and executes it. To specify a ladder library to be executed, set the subroutine No. of MCRO instruction to the value of "subroutine No. specified in the program that will become a ladder library + 200".

Follow the procedure below to execute a ladder library using MCRO instruction:

1. Set the unit to "program" mode.
2. Set "ladder library execution mode (DM 6624)" of the unit setup area in the unit to A5A5 Hex.
3. Create a program to call the ladder library with CX-Programmer or the Programming Console.

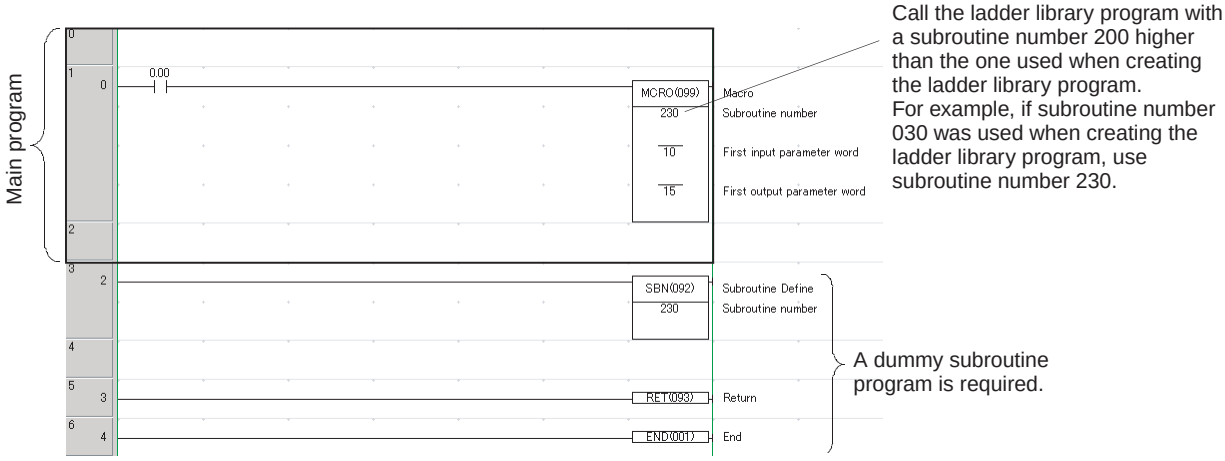

4. Transfer the created program to the unit.
5. Set the unit to "RUN mode".

Note

1. The "ladder library" in Boot mode stores the information of the unit setup area. Therefore, the ladder library called out from programs is executed following the setting of the unit setup area in the created program. The "ladder library" in MCRO mode stores the allocation of extended special instructions as information, however, the setting of the unit setup area is executed following the setting at creating the main program. Additionally, when executing the "ladder library" in Boot mode, information on allocation of the extended special instructions can be checked using peripherals.
2. Since the "ladder library" execution in MCRO mode is operated through ROM, the execution speed may decrease slightly depending on the program contents.

7-12-7 Checking the Name of a Ladder Library

The name of a ladder library saved in the Flash memory can be checked.

Follow the procedure below to check the name:

1. Set the unit to "program" mode (No error should be present).
2. Turn "library name read (SR 252 bit 09)" of the unit setup area in the unit OFF once, then ON again. At this point, the library name in the Flash memory is stored in SR 220 to 223 of the unit.
3. Monitor the SR 220 to 223 of the unit using CX-Programmer.

Note Once a ladder library is created, the programs created in the process cannot be read or edited. Therefore, when programs are created for a ladder library, make sure to save them as the master program with peripherals, or save them to the memory card using the back-up function of the unit.
Additionally, perform thorough trial operations of the programs that will become a ladder library before actually making them a library.

7-12-8 Related Areas

Unit Setup Area

Address	Bits	Function	Contents
DM 6624	00 to 15	Ladder library execution mode	Specify either "Boot mode execution" where a ladder library stored in the Flash is opened and executed at starting an operation, or "execution with MCRO instruction" where a ladder library is called by MCRO subroutine and used. Other than 5A5A, A5A5: Ladder library not used 5A5A Hex: Boot mode A5A5 Hex: Execution with MCRO instruction
DM 6625	00 to 15	Ladder library ID (4 digits)	0000 to FFFF Hex At creating a ladder library, the ID code of the library is stored in the Flash memory.
DM 6626	00 to 15	Ladder library name	Arbitrary 16-digit hexadecimal code (8 characters in ASCII). At creating a ladder library, the name of the library is stored in the Flash memory.
DM 6627	00 to 15		
DM 6628	00 to 15		
DM 6629	00 to 15		

Special Auxiliary Bits (SR Area)

Address	Bits	Function	Controlled by
SR 220 to SR 223	00 to 15	Library name display At the rise from 0 to 1 of bit 09 in SR 252, the ladder library name is stored in SR 220 to 223. (Only in Program mode)	Unit
	---		
	00 to 15		
SR 249	04	General-purpose READ/WRITE DM data in Flash memory (DM 0000 to 6143) sum error/ladder library data sum error. Turned ON in the following situations: • At occurrence of general-purpose READ/WRITE DM area in Flash memory sum error. • At ladder library data sum error	Unit
	07	Compile error (unsupported instruction)/unusable instruction in ladder library error. Turned ON in the following situation: • At occurrence of a compile error (unsupported instruction) • At creating a ladder library with programs that contains instructions which cannot be used in libraries	
	09	ON at Flash memory error/Flash memory sum error at transferring data in memory card to FlashTurned ON in the following situations: • At Flash memory error • Flash memory sum error at transferring data in memory card to the Flash. • At sum error of offset/gain adjustment value for analog input and analog output.	
SR 252	09	Library name readValid only in Program mode. 0: Ladder library name is not stored in SR 220 to 223. 1: Ladder library name is stored in SR 220 to 223.	---
	15	Ladder library set flagValid only in program mode 0 to 1: Create library **Note:** This is automatically turned to 0 (OFF) after completion of creating the library.	---

7-13 Back Up Function

7-13-1 Applicable Models

Model numbers	Functions
CS1W-HIO01-V1	12 contact inputs, 8 contact outputs
CS1W-HCP22-V1	12 contact inputs, 8 contact outputs, 2 pulse inputs, 2 pulse outputs
CS1W-HCA22-V1	12 contact inputs, 8 contact outputs, 2 pulse inputs, 2 analog outputs
CS1W-HCA12-V1	12 contact inputs, 8 contact outputs, 1 analog input, 1 pulse input, 2 analog outputs

There are 2 ways to perform back up of data.

7-13-2 Simplified Back Up Function of CPU Unit (Back Up for the Entire System) (CS1-H CPU Unit Only)

When the counter units are used with CS1-H CPU unit, the following data in a counter unit can be backed up (written) in the memory card, or restored (read) from the memory card through the simplified back up operation performed on the front panel of the CPU unit. (back up function for data in specified unit/board)

- User program in the Flash memory
- DM area only for general-purpose READ
- Unit setup area (DM 6600 to 6655)
- Information related to extended special instructions
- Information related to a ladder library

The files are stored under the file name (file name as unit/board back up file) shown below:

File name: BACKUP**.PRM

(**Note:** ** indicates the unit No. address of the unit = unit No. + 20 Hex)

Refer to *CS-series CPU Unit Operation Manual* (W339) for the details of this function.

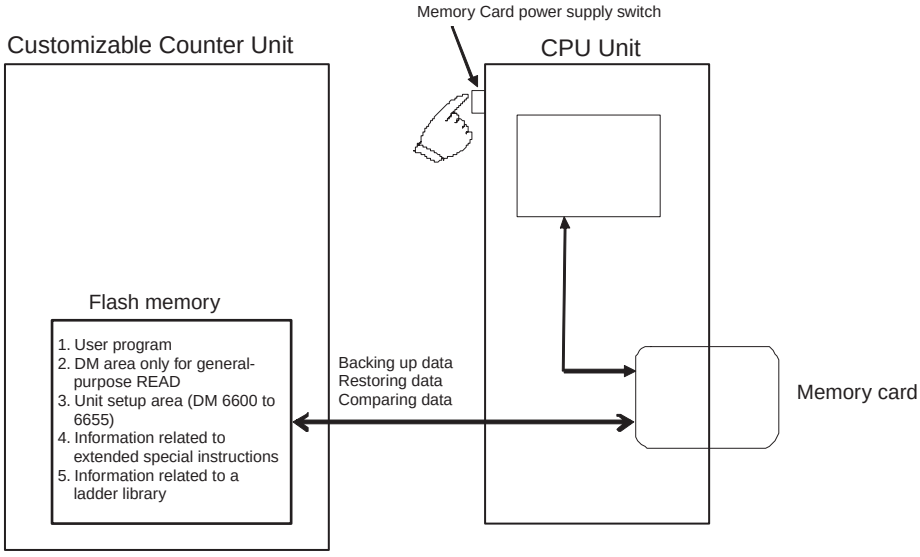

This function executes entire back up/restore of an entire system having CPU unit as its center. If the system configuration is changed, the data of the counter unit may not be restored at times. To back up or restore data of single piece of unit, perform "Back Up of Unit Memory by Bit Manipulation" instead.

(Refer to *Back Up of Unit Memory by Bit Manipulation* on page 176 for details.)

Conditions for Executing Back Up/Restore

Condition for Executing Back Up

Data cannot be backed up in the memory card of CPU unit in the following case:

- When a ladder library with a "ladder library ID" is already saved in the Flash memory, and if the "ladder library ID" does not match with the value set in the unit set up area (DM 6625).

Conditions for Executing Restore

Data cannot be restored from the memory card of CPU unit to the counter unit in the following cases:

- When a ladder library is already saved in the Flash memory, and if the back up data in the memory card of CPU unit does not contain the ladder library.

  Note: In this case, erase the ladder library first and then execute restore again. Refer to *Erasing a Ladder Library* on page 171 for details.
- When the unit No. at back up does not match with the one at restore.
- When the unit model has changed since the last back up.

7-13-3 Back Up of Unit Memory by Bit Manipulation

The following data in the Flash memory of a counter unit can be backed up (written) in the memory card, or restored (read) from the memory card through bit manipulation (back up data write/read instruction: word n in CPU unit bit 06/07).

- User program in the Flash memory
- DM area only for general-purpose READ
- Unit setup area (DM 6600 to 6655)
- Information related to extended special instructions
- Information related to a ladder library

The files are stored under the file name shown below:

File name: UNIT**.PRM

(**Note:** ** indicates the unit No. address of the unit = unit No. + 20 Hex)

This function can be executed regardless of CPU unit models (even with CS1 CPU units). Using the function realizes the unit's memory back up operation from the ladder program on the CPU unit.

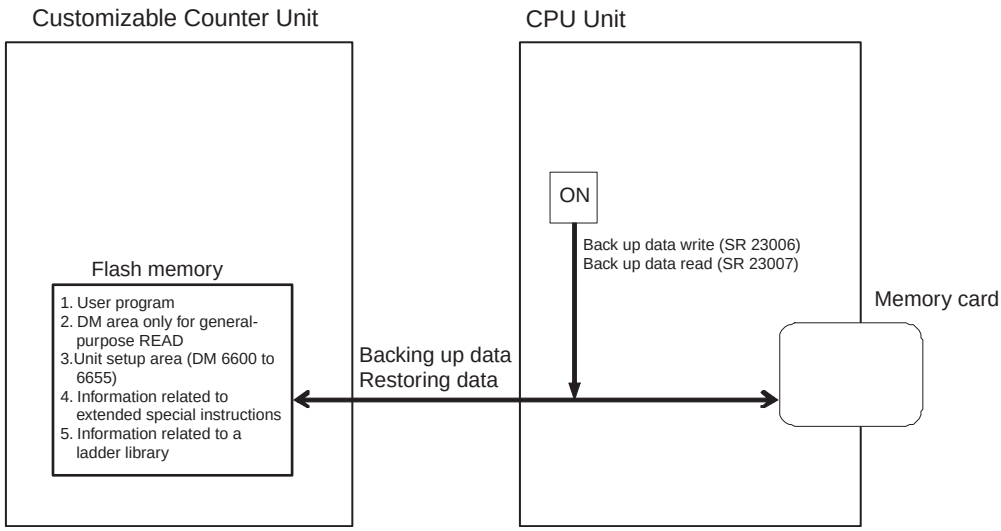

Note Immediately after editing programs in program mode or setting data in the unit setup area, the setting contents may not have been reflected to the data in the Flash memory yet.
To back up the latest contents to memory card, turn OFF the unit once, then ON again, or restart the unit before executing any back up operation.

Conditions for Executing Back Up/Restore

Conditions for Executing Back Up

Data cannot be backed up in the memory card of CPU unit in the following cases:

- When a ladder library with a "ladder library ID" is already saved in the Flash memory, and if the "ladder library ID" does not match with the value set in the unit set up area (DM 6625).
- When the operating mode of the unit is other than "Program mode".

Conditions for Executing Restore

Data cannot be restored from the memory card of CPU unit to the counter unit in the following cases:

- When a ladder library is already saved in the Flash memory, and if the back up data in the memory card of CPU unit does not contain the ladder library.

  Note: In this case, erase the ladder library first and then execute restore again. Refer to *Erasing a Ladder Library* on page 171 for details.
- When the unit No. at back up does not match with the one at restore.
- When the unit model has changed since the last back up.

CIO Area Allocation Details (n = CIO 2000 + (Unit Number × 10))

Direction	CPU Unit word address	Bits	Name	Function
Output	n	06	Back up data write	OFF to ON: Commands to write back up data in the unit to memory card inserted in CPU unit (At rise) Corresponds to SR 230, bit 06 of special auxiliary bits in the unit
		07	Back up data read	OFF to ON: Commands to read back up data from memory card inserted in CPU unit to the unit Corresponds to SR 230, bit 07 of special auxiliary bits in the unit
Input	n+5	12	Memory card transfer error	0: No error 1: Transfer error occurred
		14	Unit busy	This bit indicates whether or not the Customizable Counter Unit is busy. OFF: The Unit is not busy. ON: The Unit is busy (i.e., performing initial processing, or transferring data to memory card).

7-14 Improved Instructions

7-14-1 MCRO Instruction

Ladder Library Execution

Overview

The ladder library function can be used on All -V1 Units. Ladder libraries are executed by using the MCRO instruction in the user program.

Refer to *Ladder Library Function* on page 166 for details.

Explanation of Operations

MCRO
N
S
D

@MCRO	
N	N: Subroutine No.
S	S: First word address of argument data
D	D: First word address of returned value data

Content of Subroutine No. (N)

N = 200 to 249

Specifies the subroutine No. of a ladder library to be executed.

Content of the First Word Address of Argument Data (S)

The data of 5 words (S to S+4) starting from the first word address is given to the argument area for MCRO instruction (SR 220 to 224) as argument.

Content of the First Word Address of Returned Value Data (D)

At a return from a ladder library, the data in the returned value area for MCRO instruction (SR 225 to 229) is given to the first word address of returned value data as a returned value.

Behavior of the Flag

25503 (ER)	Turns ON when "ladder library execution mode (DM 6624)" is other than A5A5 Hex. • Turns ON when there is no ladder library of the subroutine No. specified by MCRO instruction. • Turns ON when trying to execute a ladder library with the unit in which no library has been created.

7-14-2 APR Instruction

Signed BIN 16/32 Bit Linear Approximation Operation

Overview

All -V1 units, as well as CS1-H CPU units, can use "signed 16/32 bit data" with APR instruction.

Explanation of Operations

APR
T
S
D

@APR	
T	T: First word address of linear data
S	S: Word address of input data
D	D: First word address of storage location for calculation result

Following the conversion formula below, approximate calculation about the input data specified in S is performed based on the linear data (Xn, Yn) specified in T. The result is output to the word specified in D. Only the content stored in the word address specified in S can be used as the input data X.

When Xn < S < Xn+1

Conversion formula: conversion result = Yn + [{Yn+1 – Yn}/{Xn+1 – Xn}] x {input data S – Xn}

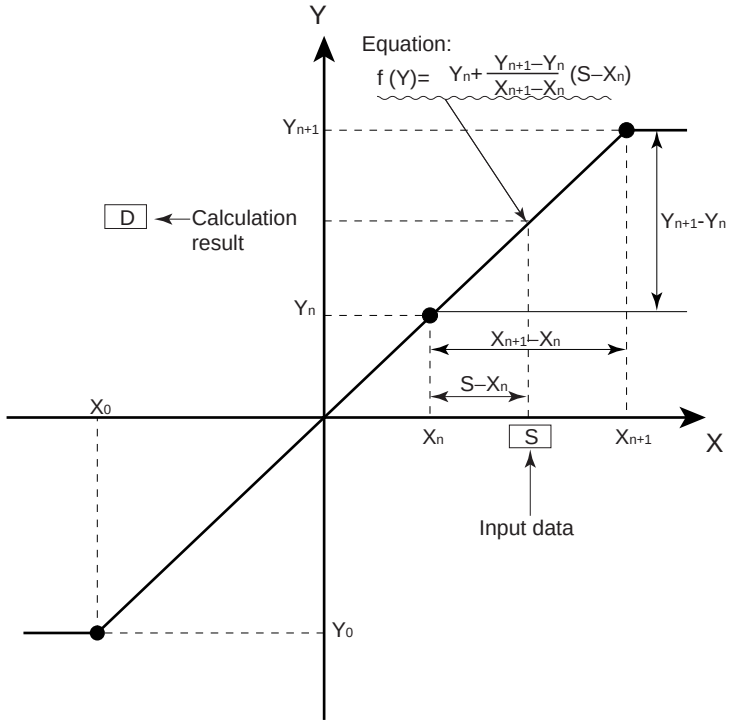

Content of the First Word Address of Linear Data (T)

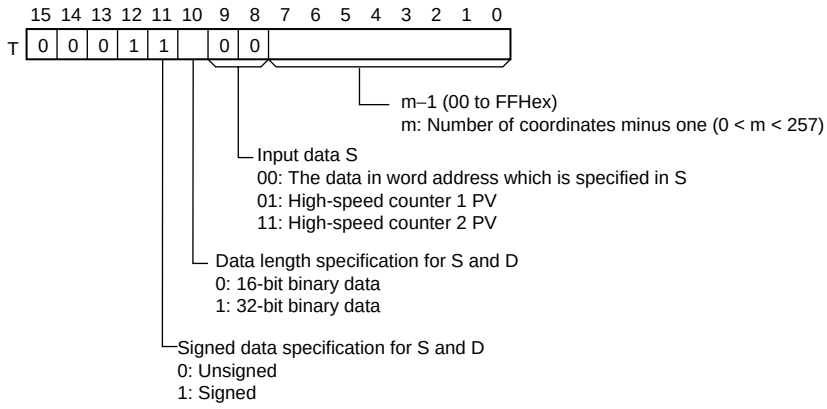

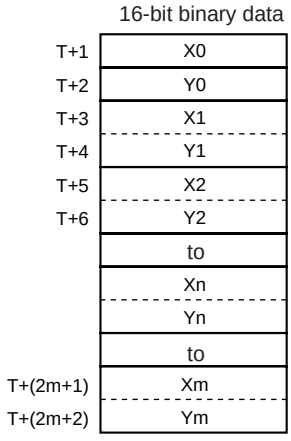

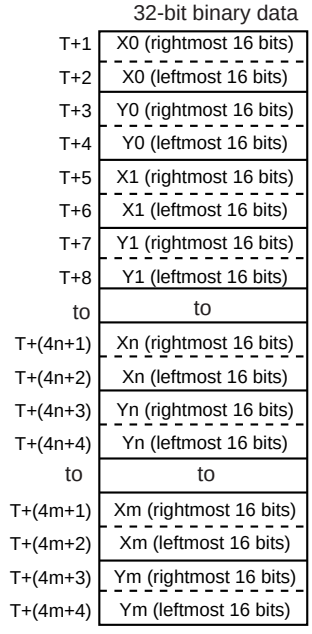

Note

1. X1 < X2 < Xm is assumed to be true. BIN data is stored as the linear data (Xm, Ym) regardless of Input/Output specified with control data.
2. For details of when "unsigned" is specified (T's bit 11 = 0), refer to *Customizable Counter Units PROGRAMMING MANUAL* (W384).
3. Please be aware that the setting of T here differs from the one with APR instruction of CS1 CPU unit.

Content of the Word Address of Input Data (S)

To specify the Word Address in which Input Data Has Been Stored

In this case, the content of the word address specified in S becomes the input data without any data modification. BIN 16 bit or BIN 32 bit is used for the input data.

S: First word address of input data

Content of Calculation Result (D)

The calculation result based on the input data is output to this word address. The result is either in BIN 16 bit or BIN 32 bit.

In 32 Bit

[D]: Calculation result (rightmost 4 digits)

[D+1]: Calculation result (leftmost 4 digits)

In 16 Bit

[D]: Calculation result (4 digits)

SIN/COS Calculation

Overview

With -V1 unit with lot No. 0209__ or later, the APR instruction enables the "SIN/COS Calculation" as well as CS1-H CPU units.

Explanation of Operation

APR	@APR	
T	T	T: Control data
S	S	S: Source data
D	D	D: Result word

Calculates the sine or cosine of the source data (hexadecimal in $\times 10^{-1}$ unit) 0000 to 0384 (0.0° to 90.0°), the result is output to result word as hexadecimal data 0000 to 270F (0.0000 to 0.9999) indicating the 4 digits below the decimal point. The 5th digit and lower are omitted.

Even though Sin 90° or Cos 0° is specified in source data, 270F (BCD: 9999) will be output and stored in the result word.

SIN Function

Operand	Value	Data range
T	#0000	---
S	0000 to 0384 (Hex)	0.0° to 90.0°
D	0000 to 270F (Hex)	0.0000 to 0.9999
	270F (Hex)	1.0000

COS Function

Operand	Value	Data range
T	#0001	---
S	0000 to 0384 (Hex)	0.0° to 90.0°
D	0000 to 270F (Hex)	0.0000 to 0.9999
	270F (Hex)	1.0000

Square Root Operation

Overview

With -V1 unit with lot No. 0209__ or later, the APR instruction enables the "Square Root Operation".

However, input from CX-Programmer is not possible. Input from a programming console.

Explanation of Operation

APR	@APR	
T	T	T: Control data
S	S	S: Source data
D	D	D: Result word

Computes the square root of hexadecimal data in S and S+1, and outputs the integer portion (4-digit hexadecimal) of the result to the result word. The figures below the decimal point are omitted.

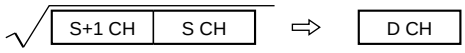

Operand	Value
T	#0002
S	0000 0000 to 0FFF FFFF (Hex)
D	0000 to 3FFF (Hex)

7-14-3 AVG Instruction

Signed Average Value Operation

Overview

All -V1 units, as well as CS1-H CPU units, can use "signed data" with AVG instruction.

AVG	
S	S: Average value-calculating word
N	N: No. of cycles for calculating average value/ signed or unsigned selection
D	D: First word address of storage location of average value, work data

Explanation of Operations

Content of No. of Cycles for Calculating Average Value/Signed or Unsigned Selection (N)

Bit	15	14	13	-----	08	07	-----	00
Value	0		0			-----		

No. of times of calculating average value (BCD 2 digits 01 to 64)

0: Unsigned average value operation
1: Signed average value operation

Content of storage words for average value/work data(D)

D	Average value
D+1	Work data
D+2	Previous value 1
D+3	Previous value 2
D+N+1	Previous value N

Content of work data

Bit	15	14	13	-----	08	07	-----	00
Value	0		0			-----		

No. of times of calculating average value (BCD 2 digits 01 to 64)

0: Unsigned average value operation
1: Signed average value operation

- Once the execution of AVG instruction starts, present values of word S are stored at each cycle as previous values until the specified number of cycles is reached. During this period, present values of word S are stored in word D. When the execution of AVG reaches the number of times of cycles specified in N, the average value (4-digit hexadecimal) is calculated and stored in word D. (Specifying 65 or larger values in N is invalid. The unit will process it as the value 64.) After that, average values are cal-

culated at each cycle based on the latest present values, and stored in word D.

- Fractions of average values are round up.

SECTION 8
Unit Operation and Processing Time

This section explains the internal processing of the Customizable Counter Unit, and the time required for processing and execution.

8-1 Customizable Counter Unit Operation 186
8-1-1 Operation Flowchart 186
8-1-2 Operational Characteristics and Precautions in Using Flash Memory 187
8-2 Power Interruptions 187
8-2-1 Operation at Power Interruptions 187
8-2-2 Startup Operation after a Power Interruption 189
8-3 Cycle Time 189
8-3-1 Overview 189
8-3-2 Instruction Execution Times 191
8-3-3 I/O Response Time 199
8-3-4 Interrupt Processing Time 200

8-1 Customizable Counter Unit Operation

This section explains the internal processing of the Customizable Counter Unit.

8-1-1 Operation Flowchart

The overall flow of Customizable Counter Unit operation is as shown in the following flowchart.

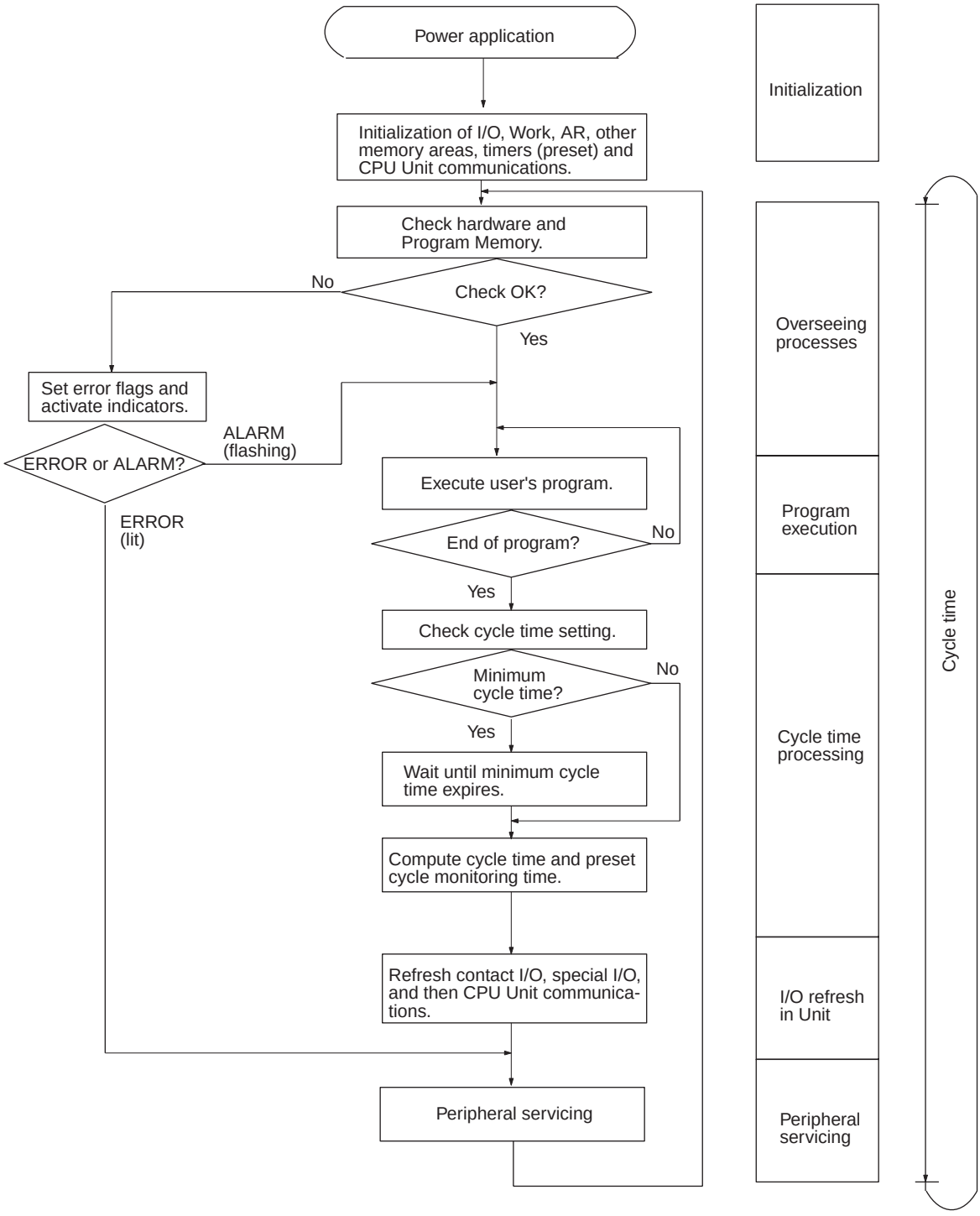

Note The cycle time and scan time are the same.

8-1-2 Operational Characteristics and Precautions in Using Flash Memory

1,2,3...

1. If the contents of read-only DM Area words (DM 6200 to DM 6599) or the User Setup Area (DM 6600 to DM 6655) are changed in the Customizable Counter Unit and the power is turned OFF without switching from PROGRAM to RUN or MONITOR mode, the changed contents in RAM will not be written to flash memory and will be lost if power remains OFF longer than the capacitor backup period. Perform the following steps to write changes to the above words to flash memory.
   - Change the Customizable Counter Unit to MONITOR or RUN mode.
   - Cycle the power supply to the PLC.
2. If the contents of read-only DM Area words (DM 6200 to DM 6599) or the User Setup Area (DM 6600 to DM 6655) are changed in the Customizable Counter Unit, it will take 1,200 ms longer to start operation compared to starting when changes have not been made. You must confirm that the additional time to start operation will not adversely affect the system the first time the PLC is started after changing the contents of these words.
3. The cycle time will be increased by 1,200 ms and the user program area and Unit Setup Area will be rewritten with interrupts disabled when changing to RUN or MONITOR mode and the under the following conditions.
   - Program changes for online editing
   - Changes to read-only DM Area words (DM 6200 to DM 6599)
   - Changes to the User Setup Area (DM 6600 to DM 6655)

   CYCLE TIME OVER errors will not occur for these conditions. You must confirm that the longer cycle time and slower I/O response time will not adversely affect the system before performing any of the above operations.

8-2 Power Interruptions

8-2-1 Operation at Power Interruptions

The following processing is performed if Customizable Counter Unit power is interrupted.

The following processing will be performed if the CPU Unit detects a power interruption in RUN or MONITOR mode.

1,2,3...

1. The Customizable Counter Unit will stop.
2. Contact outputs from the Customizable Counter Unit will be turned OFF.

The following processing will be performed for a momentary power interruption.

1,2,3...

1. The system will continue to run unconditionally if the power interruption (i.e., the period during which the voltage is less than 85% of the rated voltage) lasts less than 10 ms.
2. A power interruption may or may not be detected for a power interruption that lasts more than 10 ms but less than 25 ms, i.e., the system may continue or it may stop.
3. The system will stop unconditionally if the power interruption lasts more than 25 ms.

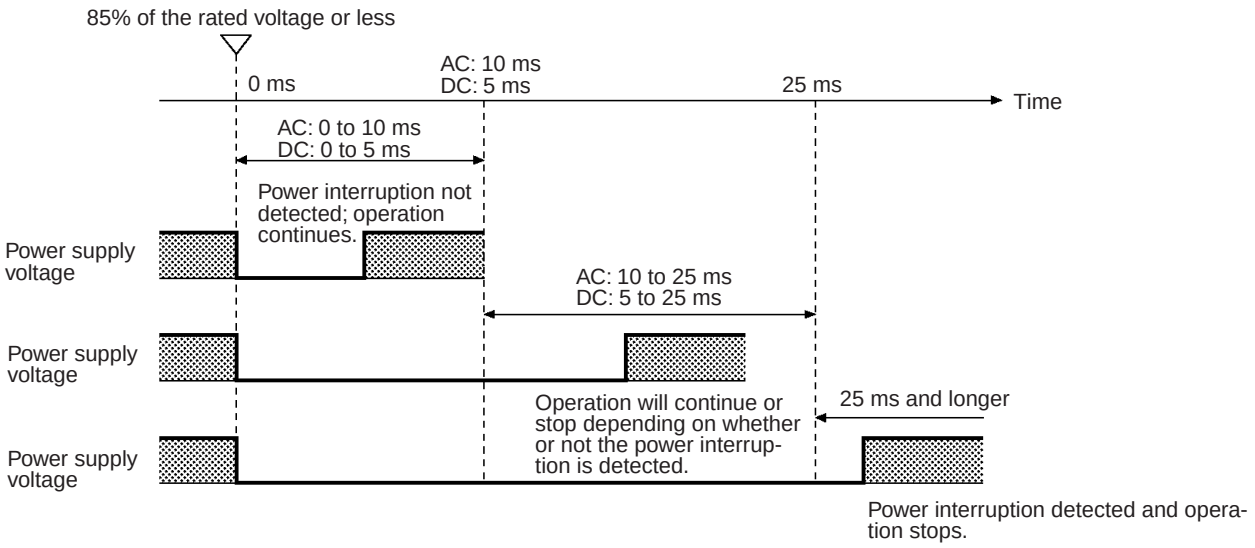

Note The above description assumes that the power interrupt detection delay set in the CPU Unit is 0 ms.

A detailed timing chart for Customizable Counter Unit power interruption is provided below.

Power Interruption Timing Chart

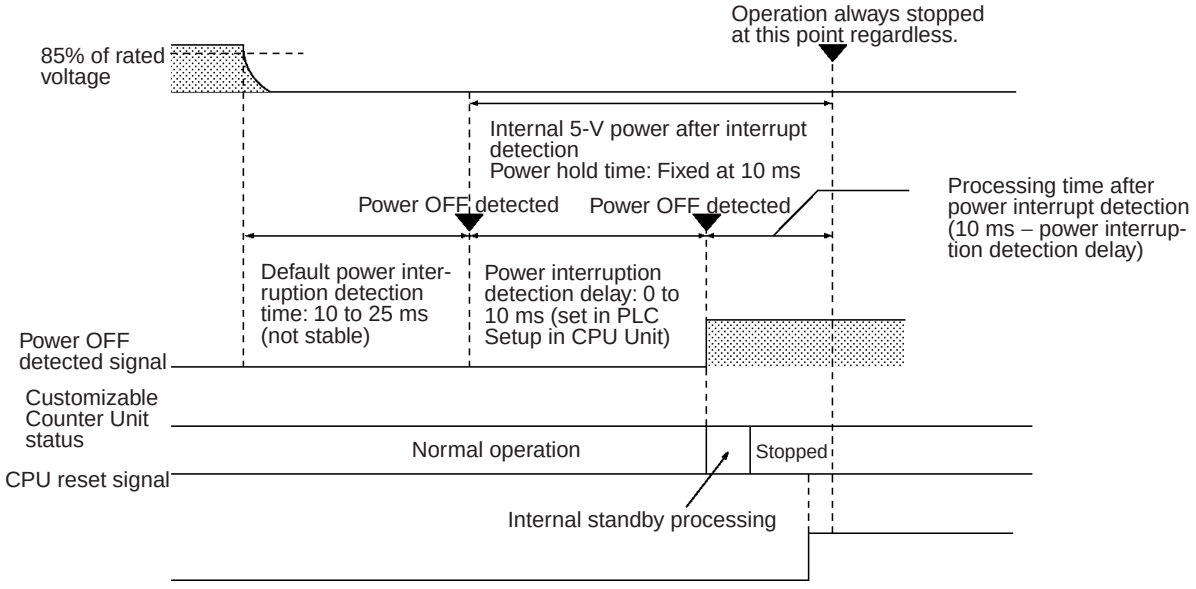

Note

1. Depending on the slot to which the Customizable Counter Unit is mounted, it may not be possible to complete power interruption processing correctly (e.g., saving counter values, ending instruction execution, etc.).
2. When the Customizable Counter Unit is restarted from the CPU Unit, power interruption processing is not performed and saving counter values and ending instruction execution will not be possible. Whenever possible, stop the Customizable Counter Unit using the RUN/STOP Command Bit before resetting it from the CPU Unit. (Even in this case, counter values will not be held correctly.

8-2-2 Startup Operation after a Power Interruption

The Customizable Counter Unit will start operating in any one of the following cases depending on the status of the RUN/STOP Command Bit (word n bit 00) and the RUN/STOP Command Enable/Disable and Operating Mode at Startup (word m bits 00 to 07):

- The RUN/STOP Command Enable/Disable and Operating Mode at Startup is 00 Hex and the RUN/STOP Command Bit (word n bit 00) is ON (RUN mode).
- The RUN/STOP Command Enable/Disable and Operating Mode at Startup is 04 Hex (RUN mode) or 03 Hex (MONITOR mode).
- The RUN/STOP Command Enable/Disable and Operating Mode at Startup is 01 Hex (Programming Console mode), the Programming Console is connected, and its mode selector is set to RUN or MONITOR mode.

8-3 Cycle Time

This section describes calculating the cycle time and I/O response time for the Customizable Counter Unit.

8-3-1 Overview

The processes involved in a single execution cycle are shown in the following table, and their respective processing times are explained. The total time required for this processing is called the cycle time.

Process	Content	Time requirements
Overseeing	Refreshing bits in SR and AR Areas and check for errors.	16 μs
Program execution	User program is executed.	Total time for executing instructions. (Varies according to content of user's program.)
Cycle time calculation	Standby until set time, when minimum cycle time is set. (See note 1.) Calculation of cycle time. Preset cycle time monitoring time.	33 μs, excluding standby processing.
I/O refresh in Customizable Counter Unit	Contact input information is read to input bits. Output information (results of executing program) is written to contact outputs. Special I/O refreshed (pulse I/O for HCP22-V1 and pulse inputs/analog outputs for HCA22-V1). Memory shared between CPU Unit and Customizable Counter Unit refreshed.	CS1W-HIO01-V1: 25 μs CS1W-HCP22-V1/HCA22-V1: 45 μs (When data is exchanged with CPU Unit using only the words allocated in the SR Area. DA output is disabled with CS1W-HCA22-V1.) CS1W-HCA22-V1: 105 μs CS1W-HCA22-V1: 30 μs per DA output 1CH CS1W-HCA12-V1: 150 μs (END refresh)
Peripheral servicing	Devices connected to peripheral port serviced. (See note 3.) Events between CPU Unit and Customizable Counter Unit services. Flash memory written.	Peripheral Connection Switch OFF: 3 μs Peripheral Connection Switch ON but not monitoring: 35 μs Peripheral Connection Switch ON and monitoring: 0.2 ms (See note 2.)

Note
1. Set in Unit Setup Area word DM 6619.
2. The time can be set in Unit Setup Area word DM 6617. The default is 0.2 ms fixed and the setting range is 0.1 to 50.0 ms variable.
3. The communications processing time for devices connected to the peripheral port will be essentially 0 if the Peripheral Connection Switch is turned OFF.

Cycle Time and Operation

The effects of the cycle time on Customizable Counter Unit operation are as listed below.

Cycle time	Operation conditions
10 ms or longer	CYCLE TIME OVER detected and SR 23509 turns ON. TIMH will not time accurately.
20 ms or longer	Programming using the 0.02-second Clock Bit (SR 25401) may be inaccurate.
50 ms or longer	Fatal error occurs if the cycle time monitoring time in DM 6618 is set to 50 ms (default).
100 ms or longer	Fatal error occurs if the cycle time monitoring time in DM 6618 is set to the maximum value.

Note User Setup Area word DM 6655 can be used to disable detection of CYCLE TIME OVER error.

Cycle Time Example

In this example, the cycle time is calculated for a Customizable Counter Unit. The conditions are as follows:
The operating conditions are as follows:

Model: CS1W-HIO01-V1
User's program: 2,000 instructions (consisting of LD and OUT instructions)
Cycle time: Variable (no minimum set)

Note The average processing time for a single instruction in the user's program is assumed to be 0.8 μs.

The cycle times are as shown in the following table.

Process	Calculation method	Time with peripheral device	When Peripheral Connection Switch is OFF
Overseeing		0.016 ms	0.016 ms
Program execution	0.8 × 2000 (μs)	1.6 ms	1.6 ms
Cycle time calculation		0.033 ms	0.033 ms
I/O refresh in Customizable Counter Unit		0.025 ms	0.025 ms
Peripheral servicing		0.2 ms	0.003 ms
Cycle time	(1) + (2) + (3) + (4) + (5)	1.874 ms	1.677 ms

Note

1. The cycle time can be automatically read from a Programming Device.
2. The maximum and current cycle time are stored in AR 26 and AR 27.
3. The cycle time can vary with actual operating conditions and will not necessarily agree precisely with the calculated value.
4. The cycle time will be a little longer when bits are force-set/reset.

8-3-2 Instruction Execution Times

Basic Instructions Normal: Normal Execution Mode, Fast: High-speed Execution Mode

Code	Mnemonic	ON execution time (μs)	Conditions	OFF execution time (μs)		
				RSET	IL	JMP
---	LD LD NOT	Normal: 0.4 Fast: 0.2	---	---		

---	AND AND NOT OR OR NOT	Normal: 0.3 Fast: 0.2				

---	AND LD OR LD	Normal: 0.1 Fast: 0.08				

---	OUT OUT NOT	Normal: 1.2 Fast: 1.1	---	---		

---	SET RSET	Normal: 1.9 Fast: 1.7				

---	TIM	Normal: 3.1 Fast: 2.8	Constant for SV	4.2	4.7	1.9
			∗DM for SV	9.5	10.0	1.9
---	CNT	Normal: 5.8 Fast: 5.1	Constant for SV	3.0	1.9	1.9
			∗DM for SV	3.0	1.8	1.9

Special Instructions

Code	Mnemonic	ON execution time (μs)	Conditions (Top: min.; bottom: max.)	OFF execution time (μs)		
00	NOP	0.08	---	---		
01	END	2.2	---	---		
02	IL	0.5	---	1.1		
03	ILC	0.8	---	0.8		
04	JMP	0.4	---	1.0		
05	JME	1.1	---	---		
06	FAL	60.2	---	1.4		
07	FALS	1.8	---	1.4		
08	STEP	5.7	---	5.7		
09	SNXT	3.2	---	2.3		
10	SFT			Reset	IL	JMP
		5.9	With 1-word shift register	4.5	0.7	0.7
		9.1	With 10-word shift register			
		25.5	With 53-word shift register			
11	KEEP			Reset	IL	JMP
		1.9	Normal Execution Mode	1.8	0.8	3.7
		1.4	High-speed Execution Mode			
12	CNTR			Reset	IL	JMP
		6.8	Constant for SV	7.3	3.9	3.7
		11.4	∗DM for SV			
13	DIFU	3.2	---	Normal	IL	JMP
				2.7	2.4	0.6
14	DIFD	2.8	---	Normal	IL	JMP
				3.3	3.1	0.6

Code	Mnemonic	ON execution time (μs)	Conditions (Top: min.; bottom: max.)	OFF execution time (μs)		
15	TIMH			Reset	IL	JMP
		5.0	Constant for SV	7.7	7.3	2.5
		5.2	∗DM for SV	12.2	12.1	2.5
16	WSFT	8.1	With 1-word shift register	0.9		
		11.1	With 10-word shift register			
		532.5	With 1,024-word shift register using ∗DM			
		3,084.7	With 6,144-word shift register using ∗DM			
20	CMP	4.6	When comparing a constant to a word	0.9		
		4.8	When comparing two words			
		14.0	When comparing two ∗DM			
21	MOV	4.3	When transferring a constant to a word	0.9		
		4.8	When moving from one word to another			
		14.2	When transferring ∗DM to ∗DM			
22	MVN	4.4	When transferring a constant to a word	0.9		
		4.9	When moving from one word to another			
		14.2	When transferring ∗DM to ∗DM			
23	BIN	9.6	When converting a word to a word	0.9		
		19.1	When converting ∗DM to ∗DM			
24	BCD	10.0	When converting a word to a word	0.9		
		18.9	When converting ∗DM to ∗DM			
25	ASL	4.8	When shifting a word	0.9		
		9.5	When shifting ∗DM			
26	ASR	4.7	When shifting a word	0.9		
		9.3	When shifting ∗DM			
27	ROL	4.1	When rotating a word	0.9		
		8.8	When rotating ∗DM			
28	ROR	4.1	When rotating a word	0.9		
		8.8	When rotating ∗DM			
29	COM	5.2	When inverting a word	0.9		
		9.8	When inverting ∗DM			
30	ADD	9.4	Constant + word → word	0.9		
		9.9	Word + word → word			
		23.6	∗DM + ∗DM → ∗DM			
31	SUB	9.3	Constant – word → word	0.9		
		10.6	Word – word → word			
		24.3	∗DM – ∗DM → ∗DM			
32	MUL	15.7	Constant × word → word	0.9		
		16.3	Word × word → word			
		30.9	∗DM × ∗DM → ∗DM			
33	DIV	15.2	Word ÷ constant → word	0.9		
		16.7	word ÷ word → word			
		30.1	∗DM ÷ ∗DM → ∗DM			
34	ANDW	8.2	Constant ∩ word → word	0.9		
		9.2	Word ∩ word → word			
		22.7	∗DM ∩ ∗DM → ∗DM			
35	ORW	8.1	Constant V word → word	0.9		
		9.0	Word V word → word			
		22.7	∗DM V ∗DM → ∗DM			

Code	Mnemonic	ON execution time (μs)	Conditions (Top: min.; bottom: max.)	OFF execution time (μs)
36	XORW	8.1	Constant ⊻ word → word	0.9
		9.0	Word ⊻ word → word	
		22.7	∗DM ⊻ ∗DM → ∗DM	
37	XNRW	8.2	Constant $\overline{\vee}$ word → word	0.9
		9.1	Word $\overline{\vee}$ word → word	
		23.0	∗DM $\overline{\vee}$ ∗DM → ∗DM	
38	INC	5.2	When incrementing a word	0.9
		9.8	When incrementing ∗DM	
39	DEC	5.2	When decrementing a word	0.9
		9.8	When decrementing ∗DM	
40	STC	1.2	---	0.9
41	CLC	1.2	---	0.9
50	ADB	9.3	Constant + word → word	0.9
		10.2	Word + word → word	
		24.2	∗DM + ∗DM → ∗DM	
51	SBB	9.6	Constant – word → word	0.9
		10.4	Word – word → word	
		24.1	∗DM – ∗DM → ∗DM	
52	MLB	10.5	Constant × word → word	0.9
		11.4	Word × word → word	
		25.8	∗DM × ∗DM → ∗DM	
53	DVB	11.1	Word ÷ constant → word	0.9
		12.0	Word ÷ word → word	
		26.5	∗DM ÷ ∗DM → ∗DM	
54	ADDL	16.1	Word + word → word	0.9
		31.2	∗DM + ∗DM → ∗DM	
55	SUBL	16.0	Word – word → word	0.9
		31.3	∗DM – ∗DM → ∗DM	
56	MULL	45.3	Word × word → word	0.9
		61.5	∗DM × ∗DM → ∗DM	
57	DIVL	43.5	Word ÷ word → word	0.9
		58.3	∗DM ÷ ∗DM → ∗DM	
58	BINL	15.1	Word → word	0.9
		25.9	∗DM → ∗DM	
59	BCDL	13.5	Word → word	0.9
		24.3	∗DM → ∗DM	
70	XFER	12.6	When transferring a constant to a word	0.9
		13.5	When transferring a word to a word	
		650.5	When transferring 1,024 words using ∗DM	
		3.76 ms	When transferring 6,144 words using ∗DM	
		946.5	When transferring 2,048 words using ∗EM	
		32.9	When transferring 1 word from flash memory using ∗DM	

Code	Mnemonic	ON execution time (μs)	Conditions (Top: min.; bottom: max.)	OFF execution time (μs)
71	BSET	8.1	When setting a constant to 1 word	0.9
		11.1	When setting word constant to 1 word	
		396.5	When setting ∗DM to 1,024 words	
		2.26 ms	When setting ∗DM to 6,144 words	
		82.5	When setting ∗EM to 2,048 words	
73	XCHG	8.7	Word → word	0.9
		18.1	∗DM → ∗DM	
74	SLD	7.2	Shifting 1 word	0.9
		13.6	Shifting 10 word	
		890.5	Shifting 1,024 words using ∗DM	
		5.18 ms	Shifting 6,144 words using ∗DM	
75	SRD	7.5	Shifting 1 word	0.9
		13.3	Shifting 10 word	
		886.5	Shifting 1,024 words using ∗DM	
		5.18 ms	Shifting 6,144 words using ∗DM	
80	DIST	11.7	When setting a constant to a word + a word	0.9
		12.7	When setting a word to a word + a word	
		28.9	When setting ∗DM to ∗DM +∗DM	
		15.9	When setting a constant to a stack	
		16.7	When setting a constant to a stack	
81	COLL	11.8	When setting a constant + a word to a word	0.9
		12.6	When setting a word + a word to a word	
		27.0	When setting ∗DM + ∗DM to ∗DM	
		11.0	When setting a word + constant to FIFO stack	
		11.8	When setting a word + word to FIFO stack	
		29.7	When setting a ∗DM + ∗DM to FIFO stack via ∗DM	
		11.0	When setting a word + constant to LIFO stack	
		11.7	When setting a word + word to LIFO stack	
		28.9	When setting a ∗DM + ∗DM to LIFO stack via ∗DM	
82	MOVB	9.5	When moving constant to word	0.9
		11.4	When moving word to word	
		25.5	When moving ∗DM to ∗DM	
83	MOVD	8.2	When moving constant to word	0.9
		10.4	When moving word to word	
		24.7	When moving ∗DM to ∗DM	
84	SFTR	10.5	Shifting 1 word	0.9
		10.8	Shifting 10 words	
		537.0	Shifting 1,024 words using ∗DM	
		3,049.0	Shifting 6,144 words using ∗DM	
85	TCMP	16.1	Comparing constant to word-set table	0.9
		17.7	Comparing word to word-set table	
		32.5	Comparing ∗DM to ∗DM-set table	
91	SBS	5.8	---	1.4
92	SBN	---	---	---
93	RET	3.7	---	1.1

Code	Mnemonic	ON execution time (μs)	Conditions (Top: min.; bottom: max.)	OFF execution time (μs)
97	IORF	7.7	Refreshing one input word	1.1
		6.2	Refreshing one output word	
		7.7	Refreshing I/O words	
99	MCRO	21.3	With word-set I/O operands	0.9
		33.7	With ∗DM-set I/O operands	
		10.9	Executing interrupt in CPU Unit	

Expansion Instructions

Code	Mnemonic	ON execution time (μs)	Conditions	OFF execution time (μs)
17	ASFT	7.7	Shifting a word	0.9
		13.0	Shifting 10 words	
		486.5	Shifting 1,024 words via ∗DM	
		2.76 ms	Shifting 6,144 words via ∗DM	
60	CMPL	9.2	Comparing words	0.9
		20.0	Comparing ∗DM	
61	INI		High-speed counters 1 and 2 or pulse output from ports 1 and 2 on CS1W-HCP22-V1/HCA22-V1:	0.9
		15.7	Starting comparison via word	
		15.8	Starting comparison via ∗DM	
		6.3	Stopping comparison via word	
		6.3	Stopping comparison via ∗DM	
		26.4	Changing PV via word	
		31.6	Changing PV via ∗DM	
		7.4	Stopping pulse output via word	
		7.4	Stopping pulse output via ∗DM	
62	PRV		High-speed counters 1 and 2 or pulse output from ports 1 and 2 on CS1W-HCP22-V1/HCA22-V1:	0.9
		12.9	Designating output via word, reading PV	
		18.5	Designating output via ∗DM, reading PV	
		10.7	Designating output via word, reading rate of change or frequency	
		15.9	Designating output via ∗DM, reading rate of change or frequency	

Code	Mnemonic	ON execution time (μs)	Conditions	OFF execution time (μs)
63	CTBL		High-speed counters 1 and 2 or pulse output from ports 1 and 2 on CS1W-HCP22-V1/HCA22-V1:	0.9
		38.3	Target table with 1 target in word and start	
		44.1	Target table with 1 target in *DM and start	
		424.3	Target table with 48 targets and start, EM not held	
		450.3	Target table with 48 targets and start, EM held	
		450.3	Target table with 16/48 targets in *DM and start	
		19.3	Range table with 1 range in word	
		24.7	Range table with 1 range in *DM	
		45.3	Range table with 16 ranges, EM not held	
		52.7	Range table with 16 ranges, EM held	
		55.1	Range table with 16 ranges in *DM	
		30.3	Target table with 1 target in words	
		410.3	Target table with 1 target in *DM	
		386.3	Target table with 48 targets, EM not held	
		408.3	Target table with 48 targets, EM held	
64	SPED		Pulse/analog output from ports 1 and 2 from CS1W-HCP22-V1/HCA22-V1:	0.9
		26.0	Frequency specified by constant	
		31.1	Frequency specified by word	
		37.0	Frequency specified by *DM	
		60.0	Analog output specified by constant	
		60.0	Analog output specified by word	
		65.2	Analog output specified by *DM	
65	PULS		Pulse output from ports 1 and 2 from CS1W-HCP22-V1:	0.9
		15.9	Relative pulses specified by word	
		20.6	Relative pulses specified by *DM	
		15.0	Absolute pulses specified by word	
		20.4	Absolute pulses specified by *DM	
		18.7	Pulse output for absolute position, pulses specified by word	
		24.1	Pulse output for absolute position, pulses specified by *DM	
66	SCL	21.3	Word designation	0.9
		36.7	*DM designation	
67	BCNT	16.7	Counting a word	0.9
		9.74 ms	Counting 6,656 words via *DM	
68	BCMP	22.2	Comparing constant, results to word	0.9
		24.0	Comparing word, results to word	
		39.5	Comparing *DM, results to *DM	

Code	Mnemonic	ON execution time (μs)	Conditions	OFF execution time (μs)
69	STIM	22.0	Word-set one-shot interrupt start	0.9
		27.2	∗DM-set one-shot interrupt start	
		22.0	Word-set scheduled interrupt start	
		30.4	∗DM-set scheduled interrupt start	
		24.2	Word-set timer read	
		33.6	∗DM-set timer read	
		6.8	Word-set timer stop	
		32.2	One-shot pulse output for CS1W-HCP22-V1	
		36.6	∗DM-set one-shot pulse output for CS1W-HCP22-V1	
		27.2	Pulse counter timer started for CS1W-HCP22-V1	
		24.4	Pulse counter timer stopped for CS1W-HCP22-V1	
89	INT	12.6	Set masks via word	0.9
		19.0	Set masks via ∗DM	
		10.3	Clear interrupts via word	
		12.1	Clear interrupts via ∗DM	
		9.9	Read mask status via word	
		14.2	Read mask status via ∗DM	
		13.3	Change counter SV via word	
		17.8	Change counter SV via ∗DM	
		5.4	Mask all interrupts via word	
		5.6	Clear all interrupts via word	
---	ACC		Pulse/analog output from ports 1 and 2 from CS1W-HCP22-V1/HCA22-V1:	0.9
		36.2	Acceleration + continuous mode, words for control words	
		33.0	Acceleration + continuous mode, ∗DM for control words	
		49.4	Deceleration + continuous mode, words for control words	
		33.0	Deceleration + continuous mode, ∗DM for control words	
		51.0	Acceleration + independent mode, words for control words	
		46.2	Acceleration + independent mode, ∗DM for control words	
		49.8	Deceleration + independent mode, words for control words	
		45.6	Deceleration + independent mode, ∗DM for control words	
		18.2	Analog output, words for control words	
		24.2	Analog output, ∗DM for control words	
---	ADBL	15.0	Word + word → word	0.9
		29.9	∗DM + ∗DM → ∗DM	
---	APR	32.1	1-item table value via word designation	0.9
		175.0	Linear approximation with 256-item table, EM not held	
		195.2	256-item table value via ∗DM designation	
		199.0	Linear approximation with 256-item table via ∗DM designation	
---	AVG	14.9	One-cycle average for word	1.8
		32.1	64-cycle average, EM not held	
		58.1	64-cycle average via ∗DM	
---	CPS	5.0	Comparing a constant and word	1.2
		5.6	Comparing words	
		15.0	Comparing ∗DM	
---	CPSL	9.5	Comparing words	0.9
		19.7	Comparing ∗DM	

Code	Mnemonic	ON execution time (μs)	Conditions	OFF execution time (μs)
---	DBS	10.4	Constant ÷ word → word	0.9
		11.6	Word ÷ word → word	
		25.9	*DM ÷ *DM → *DM	
---	DBSL	30.4	Word ÷ word → word	0.9
		46.9	*DM ÷ *DM → *DM	
---	MAX	13.3	Searching word, results to word	0.9
		512.5	Searching 999 words via *DM, results to *DM	
---	MBS	10.2	Constant × word → word	0.9
		11.1	Word × word → word	
		25.9	*DM × *DM → *DM	
---	MBSL	18.5	Word × word → word	0.9
		33.7	*DM × *DM → *DM	
---	MIN	13.3	Searching word, results to word	0.9
		512.5	Searching 999 words via *DM, results to *DM	
---	MOVL	9.4	Word → word	0.9
		20.2	*DM → *DM	
---	NEG	7.4	Converting a constant → word	1.2
		8.3	Converting a word → word	
		17.8	Converting *DM → *DM	
---	NEGL	10.2	Converting a constant → words	0.9
		20.8	Converting *DM → *DM	
---	PLS2	99.0	Words for control words	0.9
		105.0	*DM for control words	
		30.0	Virtual pulse	
---	SBBL	14.1	Word – word → word	0.9
		29.3	*DM – *DM → *DM	
---	SCL2	19.6	Word → word conversion, words for parameter words	0.9
		34.9	*DM → *DM conversion, *DM for parameter words	
---	SCL3	20.2	Word → word conversion, words for parameter words	0.9
		35.1	*DM → *DM conversion, *DM for parameter words	
---	ZCP	6.2	Comparing a constant to a word range	0.9
		8.0	Comparing a word to a word range	
		22.1	Comparing *DM to a *DM range	
---	ZCPL	12.1	Comparing words to a word range	0.9
		27.7	Comparing *DM to a *DM range	
---	TMHH	6.8	Constant designation	2.3
		7.6	Word designation	
		6.8	*DM designation	

8-3-3 I/O Response Time

The I/O response time is the time it takes after an input signal has been received (i.e., after an input bit has turned ON) for the Customizable Counter Unit to check and process the information and to output a control signal (i.e., to output the result of the processing to an output bit). The I/O response time varies according to the timing and processing conditions.

The minimum and maximum I/O response times are shown here, using the following program as an example.

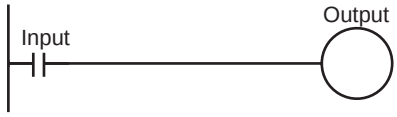

The following conditions are taken as examples for calculating the I/O response times.

Input ON delay:	0.05 ms
Overseeing time:	0.1 ms
Instruction execution time:	0.001 ms
Output ON delay:	0.1 m
Position of output instruction:	Beginning of program
Communications ports:	Not used.

Miminum I/O Response Time

The Customizable Counter Unit responds most quickly when it receives an input signal just prior to the input refresh phase of the cycle, as shown in the illustration below.

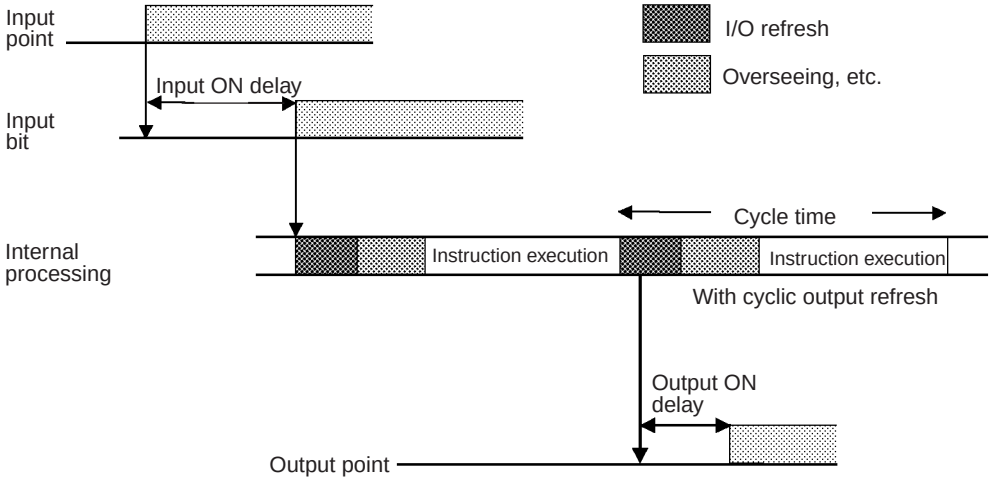

When Cyclic Output Refreshing Is Used:

Minimum I/O response time = 0.05 + 0.101 + 0.1 = 0.251 ms

Note Faster response times (100 μs standard) can be achieved by using input interrupts and the IORF instruction.

Maximum I/O Response Time

The Customizable Counter Unit takes longest to respond when it receives the input signal just after the input refresh phase of the cycle, as shown in the illustration below. In that case, a delay of approximately one cycle will occur.

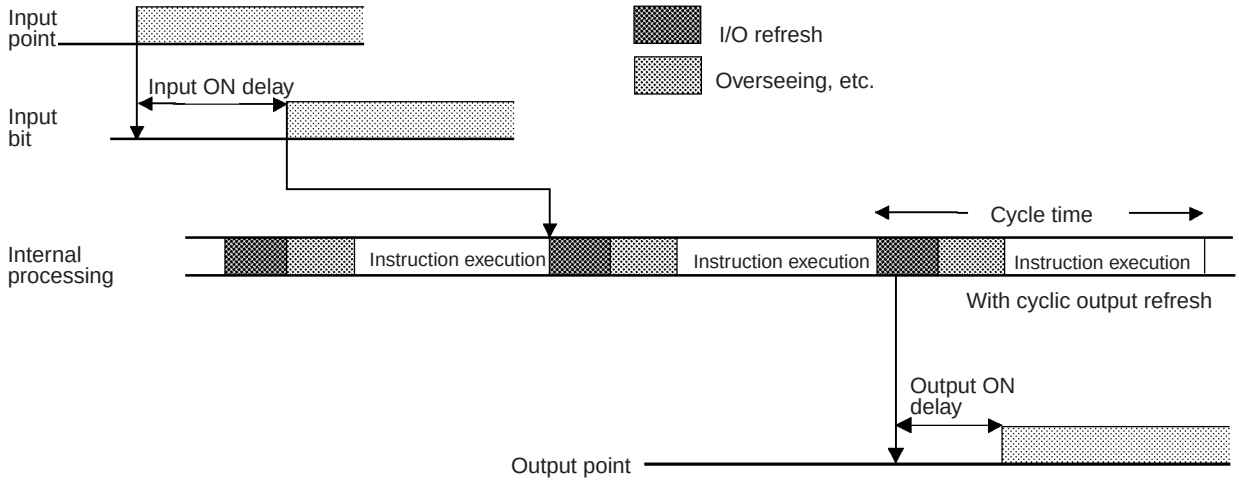

When Cyclic Output Refreshing Is Used:

Maximum I/O response time = 0.05 + 0.202 + 0.1 = 0.352 ms

8-3-4 Interrupt Processing Time

This section explains the processing times involved from the time an interrupt is executed until the interrupt processing routine is called, and from the time an interrupt processing routine is completed until returning to the original position. The explanation applies to the following four types of interrupts: Input interrupts, interval timer interrupts, high-speed counter interrupts, and pulse output interrupts. Refer to relative sections in *SECTION 7 Special Functions* for details on operation.

Processing Time

The table below shows the times involved from the generation of an interrupt signal until the interrupt processing routine is called, and from when the interrupt processing routine is completed until returning to the original position.

Item	Contents	Time
Interrupt input ON delay	This is the delay time from the time the interrupt input bit turns ON until the time that the interrupt is executed. This is unrelated to other interrupts.	50 μs
↓ (Interrupt condition realized.)		
Standby until completion of interrupt-mask processing	This is the time during which interrupts are waiting until processing has been completed. This situation occurs when a mask process is executed. It is explained below in more detail.	See below.
↓		
Change-to-interrupt processing	This is the time it takes to change processing to an interrupt.	
↓ (Interrupt processing routine executed)		
Return	This is the time it takes, from execution of RET(93), to return to the processing that was interrupted.	5 μs

Generation and Clearing of Non-fatal Errors:

When a non-fatal error is generated and the error contents are registered at the Customizable Counter Unit, or when an error is being cleared, interrupts will be masked for a maximum of 55 μs until the processing has been completed.

Online Editing:

Interrupts will be masked for a maximum of 1,200 ms when online editing is executed during operation.

Data Exchange with CPU Unit

Interrupts will be disabled when processing for data exchange with the CPU Unit is being performed. The time for which interrupts are disabled will be longer if LR Area and DM Area data exchange is also used in comparison to using only the SR Area data exchange.

Example Calculation

This example shows the interrupt response time (i.e., the time from when the interrupt input turns ON until the start of the interrupt processing routine) when input interrupts are used under the conditions shown below.

Number of high-speed timers:	0 (No high-speed timers started)
Non-Fatal error detection:	Not canceled
Online edit:	Not used
DM/LR Area data exchange:	No

Minimum Response Time

	Interrupt input ON delay:	50 μs
	Interrupt mask standby time:	0 μs
+	Change-to-interrupt processing:	20 μs
	Minimum response time:	70 μs

Maximum Response Time

	Interrupt input ON delay:	50 μs
	Interrupt mask standby time:	10 μs
+	Change-to-interrupt processing:	20 μs
	Minimum response time:	80 μs

Note

1. In addition to the response time shown above, the time required for executing the interrupt processing routine itself and a return time of 5 μs must also be accounted for when returning to the process that was interrupted.
2. Be sure to allow for interrupt processing time when using interrupts in the program.
3. The IORF instruction can be used to output the results of interrupt processing immediately. The results of processing in the main program will also be output when IORF is executed.
4. Analog outputs from the CS1W-HCA22-V1 can be output immediately from the interrupt subroutine by using the SPED and ACC instructions if the Unit Setup Area is set to update analog inputs immediately for instruction execution. The results of processing in the main program will also be output when the instruction is executed.

SECTION 9
Troubleshooting

This section provides information on troubleshooting errors that can occur with the Customizable Counter Unit.

9-1 Types of Troubleshooting Information 204
9-2 Error Log 204
9-2-1 Error Log Contents. 205
9-2-2 Special I/O Unit Error Codes and Detailed Information 205
9-3 Troubleshooting Tables 206
9-3-1 Fatal Errors. 207
9-3-2 Non-fatal Errors 210
9-3-3 Error Codes of Special I/O Unit and Detailed Information 211
9-4 User-defined Errors 212
9-5 Troubleshooting Flowcharts 213

9-1 Types of Troubleshooting Information

The Customizable Counter Unit records error information when an error occurs in the Customizable Counter Unit or in the CPU Unit. The following types of information are recorded in the Customizable Counter Unit.

Error Flags

One of the error flags will be turned ON to indicate when an error has occurred.

Unit Error Codes

There are two types of error codes: Special I/O Unit error codes and Customizable Counter Unit error codes.

The Special I/O Unit error codes are general error codes used by the Special I/O Units. These error codes are placed in the first word of an error record in the error log. The Customizable Counter Unit error codes provide specific information about Customizable Counter Unit errors. These error codes are stored in SR 23500 to SR 23507, in the detailed information in the error log, and in bits 00 to 07 of n+5 in the CIO Area words allocated in the CPU Unit.

Error Codes

Type	Applicability	Storage location	Description
Special I/O Unit error codes	All Special I/O Units	First word of error log record	General error information for Special I/O Units
Customizable Counter Unit error codes	Only the Customizable Counter Unit	SR 23500 to SR 23507 and detailed information in error log	Specific error information for Customizable Counter Unit.

Error Log

An error record is created in the error log when an error occurs. Each error record contains the Special I/O Unit error code, detailed information, and the time read from the CPU Unit (see note). Up to 11 error records will be stored in the error log, which is located in DM 6144 to DM 6199.

Note If the time cannot be accessed from the CPU Unit, all zeros will be stored for the time.

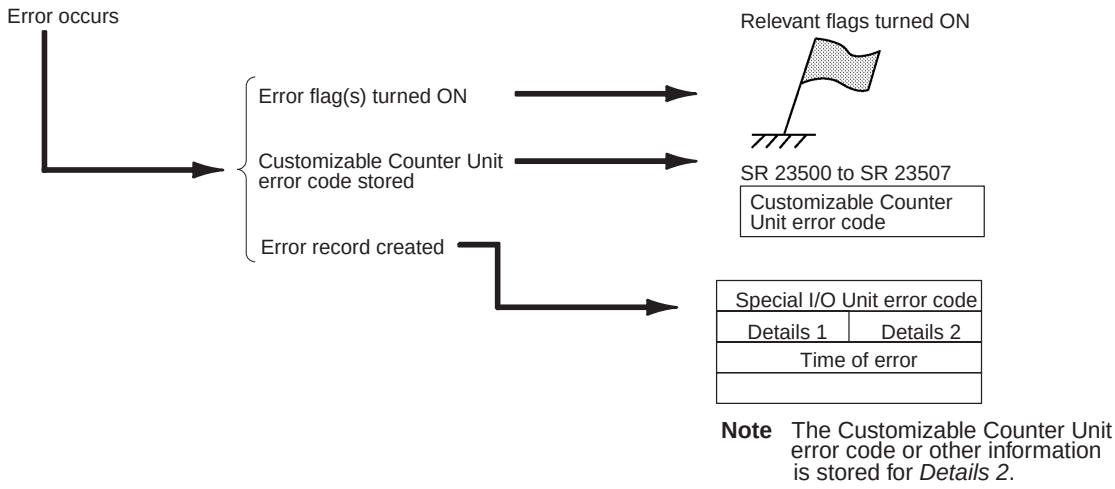

Note Refer to the manuals for the CS-series PLC for information on CPU Unit error information.

9-2 Error Log

The error log registers the error records for errors that occur in the Customizable Counter Unit. The error information stored in the error log can be used for troubleshooting.

9-2-1 Error Log Contents

The error log is stored in DM 6569 through DM 6599 as shown below.

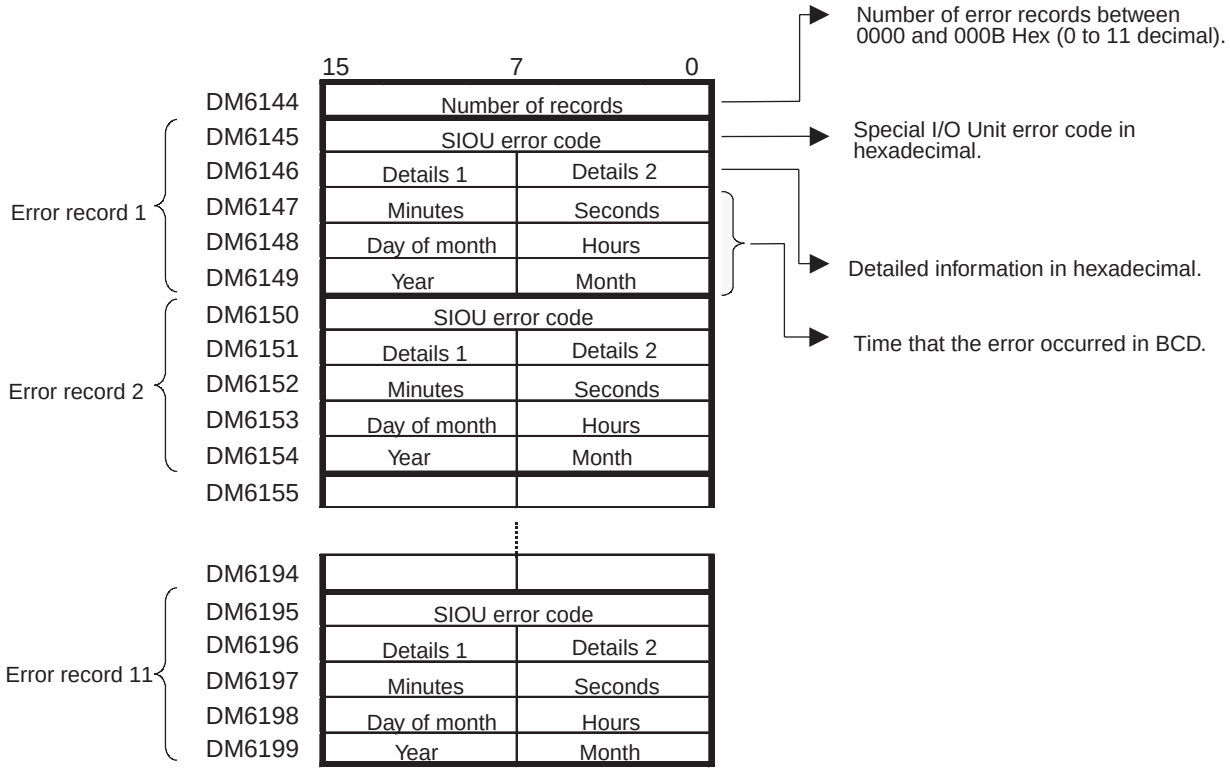

Each record consists of 5 words including the Special I/O Unit error code, detailed information, and time. Up to 11 error records are stored in the order they occur. The number of records that have been stored will be stored in the first word in hexadecimal.

Note

1. The times stored in the error log are read from the CPU Unit. If the time cannot be accessed from the CPU Unit, all zeros will be stored for the time.
2. Refer to the manuals for the CS-series PLC for information on the CPU Unit error log.

9-2-2 Special I/O Unit Error Codes and Detailed Information

The following codes are stored for the Special I/O Unit error codes and detailed information.

Special I/O Unit error code	Detailed information		Meaning
	Details 1 (bits 08 to 15)	Details 2 (bits 00 to 07)	
0001 Hex	00 Hex	00 Hex	WDT error in CPU Unit
0002 Hex	Cyclic Service Monitor Time (ms)		CPU Unit service monitoring error
0006 Hex	08 Hex	00 Hex	I/O table error
	00 Hex	00 Hex	Other fatal CPU Unit error
000E Hex	00 Hex	00 Hex	CPU bus error
0360 Hex	00 Hex	Customizable Counter Unit error code	System error in Customizable Counter Unit

Error Log Storage Methods

The error log storage method is set in the Unit Setup Area in DM 6655, bits 00 to 03). Set any of the following methods.

1. 0 Hex: You can store the most recent 11 error log records and discard older records. This is achieved by shifting the records as shown below so that the oldest record (record 0) is lost whenever a new record is created.

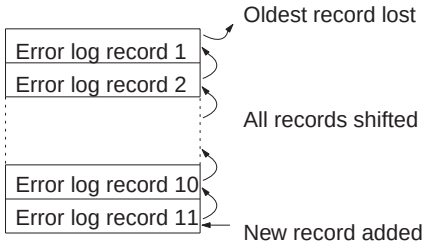

2. 1 Hex: You can store only the first 11 error log records, and ignore any subsequent errors beyond those 11.

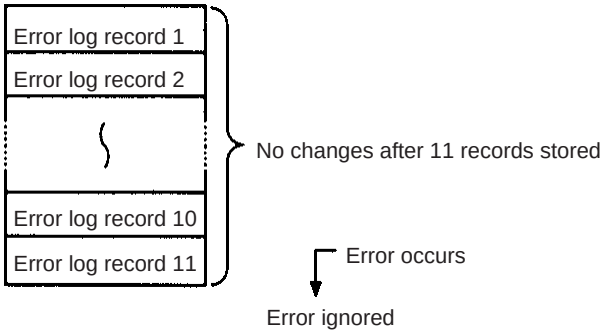

Clearing the Error Log

To clear the entire error log, turn ON SR 25214 from a Programming Device in PROGRAM mode or using an instruction. (After the error log has been cleared, SR 25214 will turn OFF automatically.)

9-3 Troubleshooting Tables

There are basically two types of error that can occur for the Customizable Counter Unit: Fatal errors, which stop operation, and non-fatal errors, which do not. The ultimate cause of either of these errors could be in the Customizable Counter Unit or in the CPU Unit.

When an error occurs, the Customizable Counter Unit will perform the following.

- Indicate the error on the Unit indicators.
- Display an error message and error code on any Programming Device that is connected.
- Store the Customizable Counter Unit error code in SR 23500 to SR 23507 and allocated word n+5 bits 00 to 07.
- Turn on the relevant error flags and SR Area bits (SR 23508 to SR 23511).
- Store an error record in the error log in DM 6144 to DM 6199, including the Special I/O Unit error code, detailed information, and time.

The following tables provide the error information and corrective messages for errors that can occur.

9-3-1 Fatal Errors

Any errors that occur should be investigated and remove immediately. After correcting an error, restart the PLC or clear the error from a Programming Device.

Customizable Counter Unit Fatal Errors

Error	Unit indicators				Error message	Error log (SIOU code, details 1, details 2)	SR 23500 to SR 23507	Error flags	Meaning and corrective measures
	RUN	OPN	ERC	ERH					
Power interrupted	OFF	OFF	OFF	OFF	---	---	---	---	Power has been interrupted for at least 10 ms. Check power supply voltage and power lines. Try to power-on again.
Unit WDT error	OFF	OFF	OFF	OFF	---	---	---	---	A WDT timer error has occurred. Change to PROGRAM mode and try to power-on again.
Unit RAM error	OFF	OFF	Lit	OFF	---	---	---	---	An error was detected when checking RAM for shared memory with CPU Unit at power-on. Try to power-on again.

Error	Unit indicators				Error message	Error log (SIOU code, details 1, details 2)	SR 23500 to SR 23507	Error flags	Meaning and corrective measures
	RUN	OPN	ERC	ERH					
Memory error	Lit	OFF	Lit	OFF	MEM-ORY ERR	0360 Hex 00 Hex F1 Hex	F1 Hex	SR 24904	Library checksum error has occurred (-V1 unit only). Create a ladder library, or download backup data in memory card.
								SR 24906	The object program area overflowed when the user program was compiled. Reduce the size of the program or try Normal Execution Mode if High-speed Execution Mode was used initially.
								SR 24907	Illegal instructions were found in a program, or a ladder library (-V1 unit only). Remove illegal instructions from the program or the ladder library. After that, transfer the program again.
								SR 24908	Out-of-range operands were found in the program. Make sure that all addresses used in the program are supported by the Unit and retransfer the program.
								SR 24909	A flash memory error has occurred in the unit. A sum error has occurred at reading data from memory card (only customizable unit -V1). Switch to PROGRAM mode and turn OFF the power once, then ON again. Then transfer the program again. For HCA22(-V1) and HCA12(-V1), check bits 12 to 15 of AR 17 and bits 08 to 15 of AR 03 and perform the following: If there is an error in the user adjustments, clear the error and readjust the settings. If there is an error in default adjustments, replace the unit. Finally, read data from memory card.
								SR 24910	A checksum error occurred in read-only words in DM Area. Reset the read-only words in DM Area.
								SR 24911	A checksum error occurred in Unit Setup Area. Reset the Unit Setup Area.
								SR 24912	A checksum error occurred in the user program or an instruction has been used incorrectly. Retransfer the program.
								SR 24913	A checksum error has occurred in an expansion instruction's data. Set all of the expansion instruction settings again and retransfer the program.
	Lit	---	---	OFF	---	---	---	SR 24914	Memory contents could not be held for a power interruption. Download or reinput the required data.

Error	Unit indicators				Error message	Error log (SIOU code, details 1, details 2)	SR 23500 to SR 23507	Error flags	Meaning and corrective measures
	RUN	OPN	ERC	ERH					
No END	Lit	OFF	Lit	OFF	NO END INST	0360 Hex 00 Hex F0 Hex	F0 Hex	SR 23511	END(01) is not written anywhere in program. Write END(01) at the final address of the program.
Unit system error (FALS)	Lit	OFF	Lit	OFF	SYS FAIL FALS**	0360 Hex 00 Hex FALS No. (1 to 99 BCD)	FALS No. (1 to 99 BCD)	SR 23511	An FALS(07) instruction has been executed in the program. Check the FALS number to determine the conditions that would cause execution, correct the cause, and clear the error.
Unit cycle time monitor error	Lit	OFF	Lit	OFF	SYS FAIL FALS9F	0360 Hex 00 Hex F9 Hex	F9 Hex	SR 23511	The cycle time has exceeded the FALS 9F Cycle Time Monitoring Time (DM 6618). Check the cycle time and adjust the Cycle Time Monitoring Time if necessary.

CPU Errors Resulting in Customizable Counter Unit Fatal Errors

Error	Unit indicators				Error message	Error log (SIOU code, details 1, details 2)	SR 23500 to SR 23507	Error flags	Meaning and corrective measures
	RUN	OPN	ERC	ERH					
Unit recognition error	OFF	OFF	Lit	Lit	---	---	---	---	The Customizable Counter Unit is not recognized as a Special I/O Unit by the CPU Unit. Try to power-on again.
Unit not recognized	OFF	OFF	OFF	Lit	---	0006 Hex 08 Hex 00 Hex	---	---	The actual I/O tables do not agree with the registered I/O tables. Recreate the I/O tables in the CPU Unit.
Unit number error	OFF	OFF	OFF	Lit	---	---	---	---	The unit number is not set correctly or the same number has been set for another Unit. Correct the unit numbers and try to power-on again.
Unit setting read error	OFF	OFF	OFF	Lit	---	---	---	---	No response to a FINS command or CPU settings could not be read. Try to power-on again.
Bus error	OFF	OFF	OFF	Lit	---	---	---	---	The access right could not be obtained. Try to power-on again.

9-3-2 Non-fatal Errors

Although Unit operation will not stop, any errors that occur should be investigated and remove immediately. After correcting an error, restart the PLC or clear the error from a Programming Device.

Customizable Counter Unit Non-fatal Errors

Error	Unit indicators				Error message	Error log (SIOU code, details 1, details 2)	SR 23500 to SR 23507	Error flags	Meaning and corrective measures
	RUN	OPN	ERC	ERH					
Unit system error (FAL)	Lit	Lit	Flash	OFF	SYS FAIL FAL**	0360 Hex 00 Hex FAL No. (1 to 99 BCD)	FAL No. (1 to 99 BCD)	SR 23510	An FAL(06) instruction has been executed in the program. Check the FAL number to determine conditions that would cause execution, correct the cause, and clear the error.
Unit setting error	Lit	Lit	Flash	OFF	SYS FAIL FAL9B	0360 Hex 00 Hex 9B Hex	9B Hex	SR 24900 to SR 24902	There is an error in the settings for the Unit. Check the functions being used are redo the settings.
	Lit	Lit	Flash	Lit				SR 24903	There is an error in m to m+9 allocated in the DM Area in the CPU Unit. Check the settings and correct any mistakes.
Unit CYCLE TIME OVER	Lit	Lit	Flash	OFF	SCAN TIME OVER	0360 Hex 00 Hex F8 Hex	F8 Hex	SR 23509	The cycle time of the Unit exceeded 10 ms. Either alter the program to reduce the cycle time or set DM 6655 bits 08 to 11 so that this error is not detected.
Communications error	Lit	---	---	OFF	---	---	---	SR 25012	A communications error occurred for the peripheral port. Check the cables. Also, check the communications settings for the peripheral port in DM 6650 to DM 6654 and correct any mistakes.
Restore error of simplified backup data	Lit	---	Lit	---	---	---	---	---	The unit failed to restore the simplified backup data in the memory card of CPU unit. Check if the system configuration is the same as the one at the time of backup.

CPU Errors Resulting in Customizable Counter Unit Non-fatal Errors

Error	Unit indicators				Error message	Error log (SIOU code, details 1, details 2)	SR 23500 to SR 23507	Error flags	Meaning and corrective measures
	RUN	OPN	ERC	ERH					
CPU unit system setting error	Lit	See note.	Flash	Lit	SYS FAIL FAL9B	0360 Hex 00 Hex 9B Hex	9B Hex	SR 24903	There is an error in unit system setting of the CPU unit. Check the setting and correct any error.
Fatal CPU Unit error	Lit	See note.	Flash	Lit	---	0006 Hex 00 Hex 00 Hex	0A Hex	SR 24915	A fatal error occurred in the CPU Unit. Correct the error in the CPU Unit.
CPU Unit WDT error	Lit	See note.	Flash	Lit	---	0001 Hex 00 Hex 00 Hex	0B Hex	SR 24915	A WDT error occurred in the CPU Unit. Correct the error in the CPU Unit.
CPU Unit monitor error	Lit	See note.	Flash	Lit	---	0002 Hex Cyclic service monitor time (ms)	0C Hex	SR 24915	An error occurred in cyclic servicing with the CPU Unit (the access right could not be obtained during the cyclic service monitor time). The error will be cleared when cyclic servicing with the CPU Unit is restarted. Check the CPU Unit and correct any errors.
Bus error	Lit	See note.	Flash	Lit	---	000E Hex 00 Hex 00 Hex	0D Hex	SR 24915	A bus error occurred with the CPU Unit. Check the CPU Unit and correct any errors.

Note If an error occurs in the CPU Unit and SR 24815 turns ON when the RUN/STOP Command Bit (word n bit 00) is being used (i,e., bits 00 to 07 of DM word m contain 0 Hex), the RUN/STOP Command Bit will turn OFF and the Customizable Counter Unit will be stopped. For CPU Unit monitor errors or bus errors, however, I/O refreshing from the CPU Unit will be stopped, so the status of the RUN/STOP Command Bit will not change. Error processing in this situation must be performed in the Customizable Counter Unit. If RUN/STOP Command Bit has been disabled, (i,e., bits 00 to 07 of DM word m contain anything other than 0 Hex), a non-fatal error will occur in the Customizable Counter Unit.

9-3-3 Error Codes of Special I/O Unit and Detailed Information

Special I/O unit error code	Detailed information		Description of error
	Detail 1 (bit 08 to 15)	Detail 2 (bit 00 to 07)	
0001 Hex	00 Hex	00 Hex	A WDT error occurred in the CPU unit.
0002 Hex	Cyclic service monitor time (ms)		Service monitor error of the CPU unit occurred.
0006 Hex	08 Hex	00 Hex	An I/O table register error occurred.
	00 Hex	00 Hex	Other CPU fatal error
000E Hex	00 Hex	00 Hex	A CPU bus error occurred.
000F Hex	00 Hex	00 Hex	An initial processing error occurred in the CPU unit.
0360 Hex	00 Hex	"Unit error code" is stored here.	Unit system error. An error occurred in the customizable counter unit.

9-4 User-defined Errors

There are two instructions that the user can use to define errors or messages. These instructions can be used to generate warnings (non-fatal errors where the ERC flashes) or errors (fatal errors where the ERC lights).

FAILURE ALARM – FAL(06)

FAL(06) is an instruction that causes a non-fatal error. The following will occur when an FAL(06) instruction is executed:

1,2,3...

1. The ERC indicator on the Customizable Counter Unit will flash. Operation will continue.
2. The instruction's 2-digit BCD FAL number (01 to 99) will be written to SR 23500 to SR 23507.
3. The FAL number will be recorded in the error log area in the Customizable Counter Unit. The time of occurrence will also be recorded.

The FAL numbers can be set arbitrarily to indicate particular conditions. The same number cannot be used as both an FAL number and an FALS number.

To clear an FAL error, correct the cause of the error, execute FAL 00, and then clear the error using the Programming Console.

SEVERE FAILURE ALARM – FALS(07)

FALS(07) is an instruction that causes a fatal error. The following will occur when an FALS(07) instruction is executed:

1,2,3...

1. Program execution will be stopped.
2. The ERC indicator on the Customizable Counter Unit will light.
3. The instruction's 2-digit BCD FALS number (01 to 99) will be written to SR 23500 to SR 23507.
4. The FALS number will be recorded in the error log area in the Customizable Counter Unit. The time of occurrence will also be recorded.

The FALS numbers can be set arbitrarily to indicate particular conditions. The same number cannot be used as both an FAL number and an FALS number.

To clear an FALS error, switch the PLC to PROGRAM Mode, correct the cause of the error, and then clear the error using the Programming Console.

9-5 Troubleshooting Flowcharts

Use the following flowcharts to troubleshoot errors that occur during operation.

Main Check

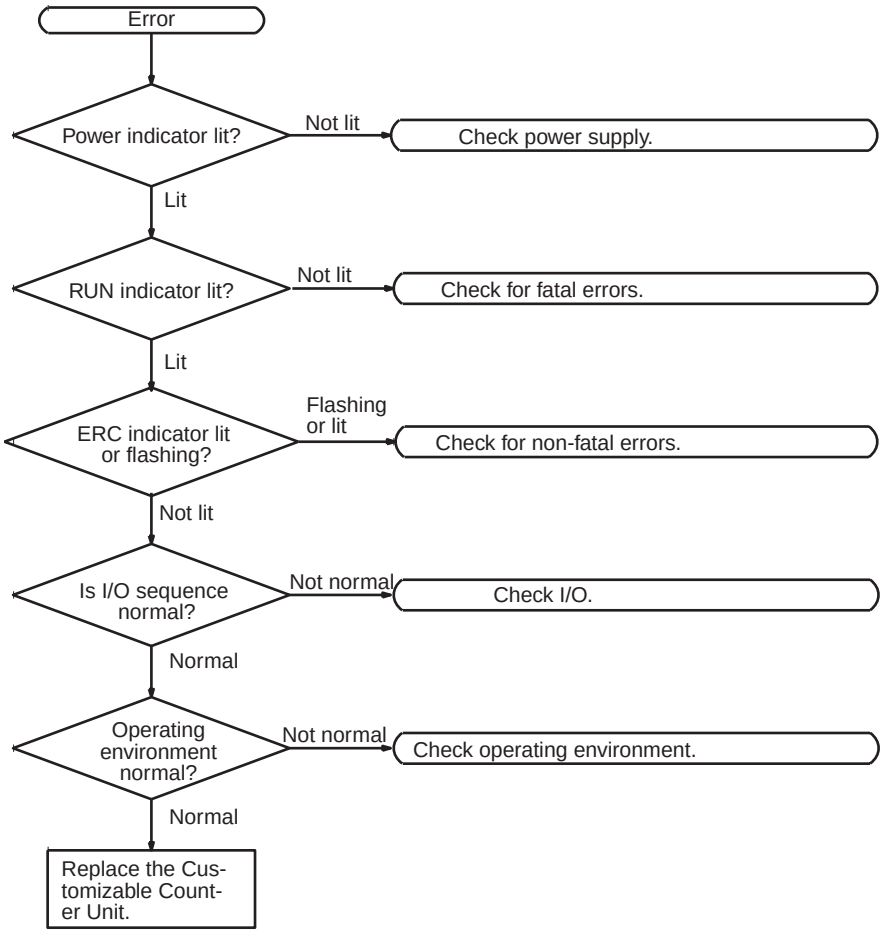

Note Always turn OFF the power to the PLC before replacing Units, wiring, or cables.

Power Supply Check

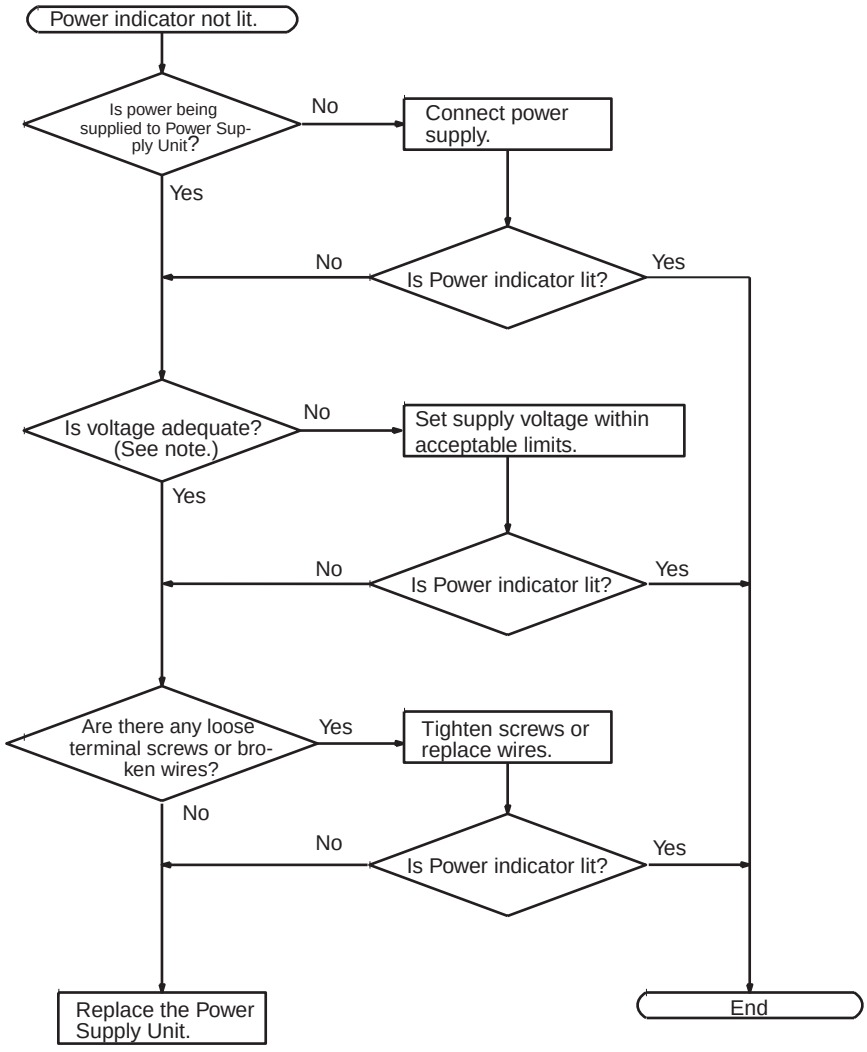

Note Refer to *CS-series Operation Manual* for the allowable voltage ranges for the Power Supply Unit.

Error Check with the POWER Indicator Lit

The following flowchart can be used to troubleshoot errors that occur while the POWER indicator is lit.

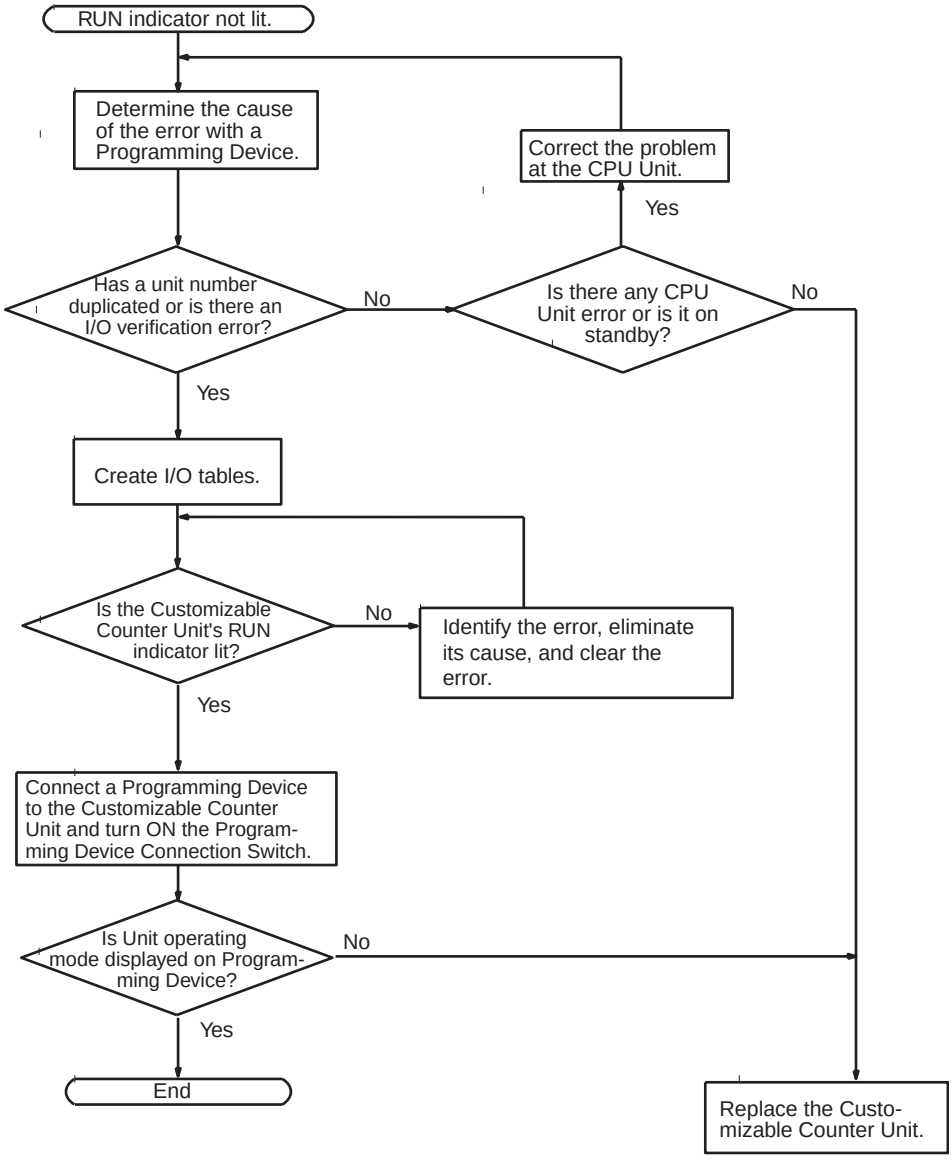

Error Check with the RUN Indicator Lit

The following flowchart can be used to troubleshoot errors that occur while the RUN indicator is lit.

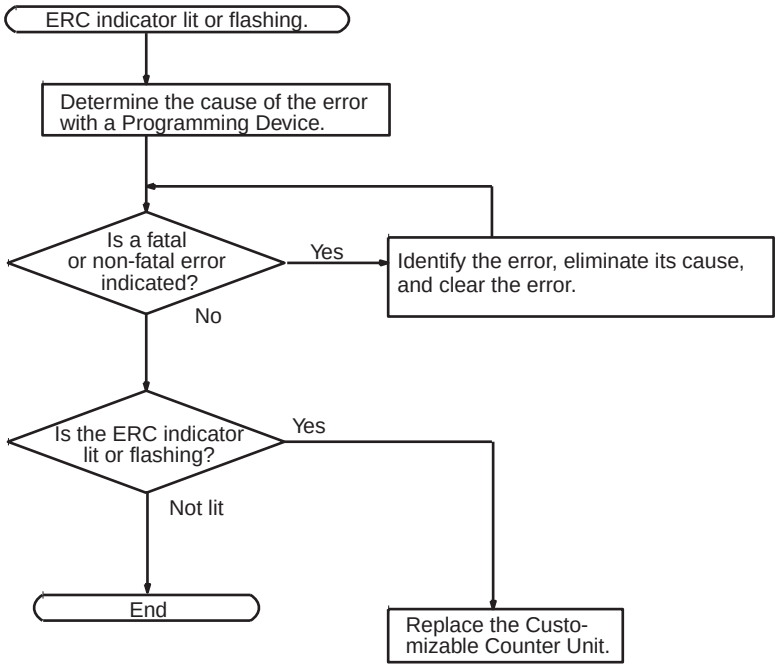

I/O Check

The I/O check flowchart is based on the following ladder diagram section.

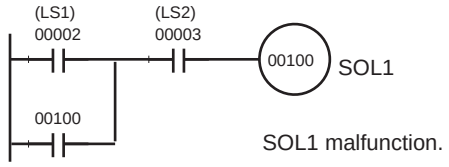

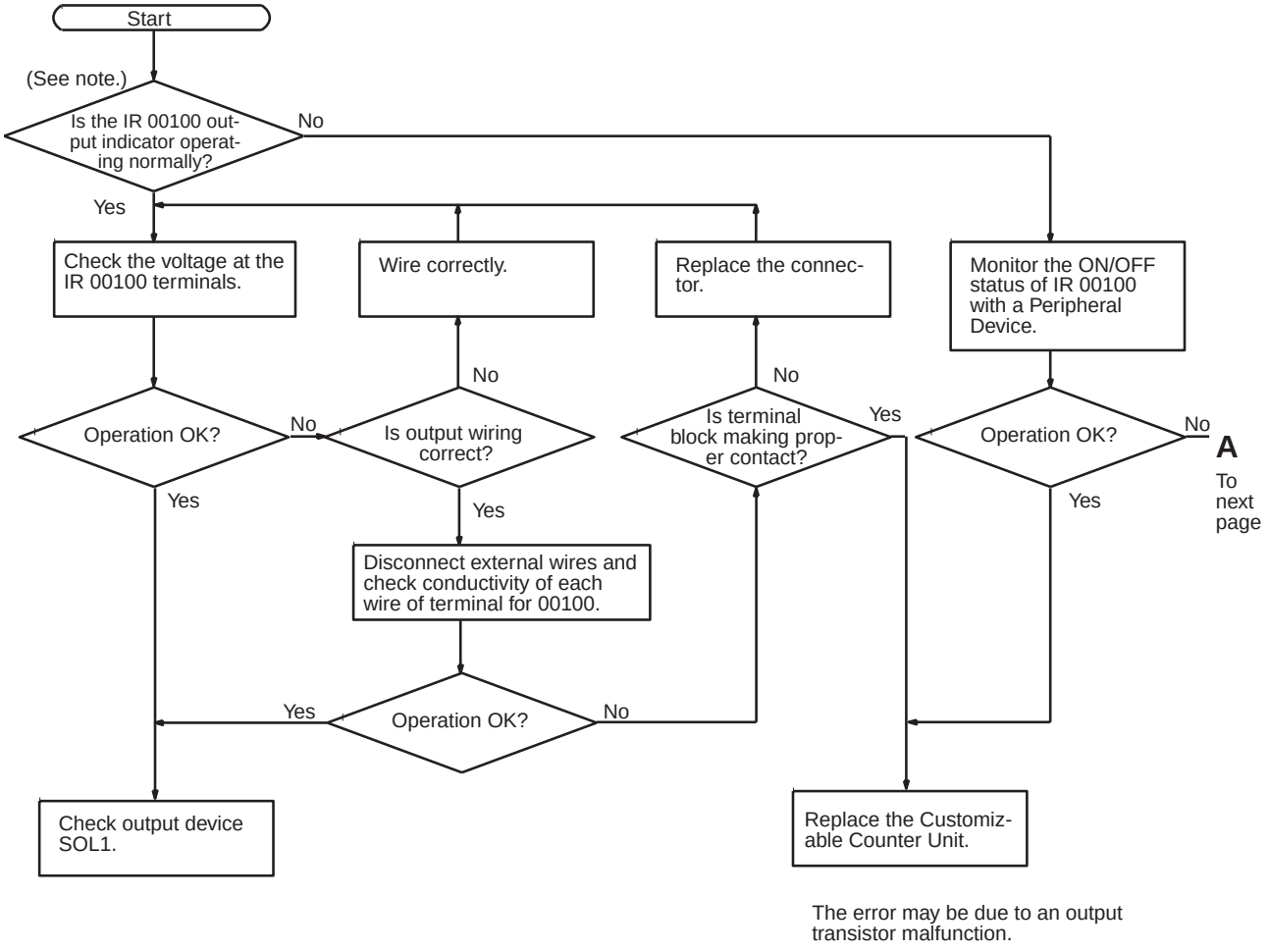

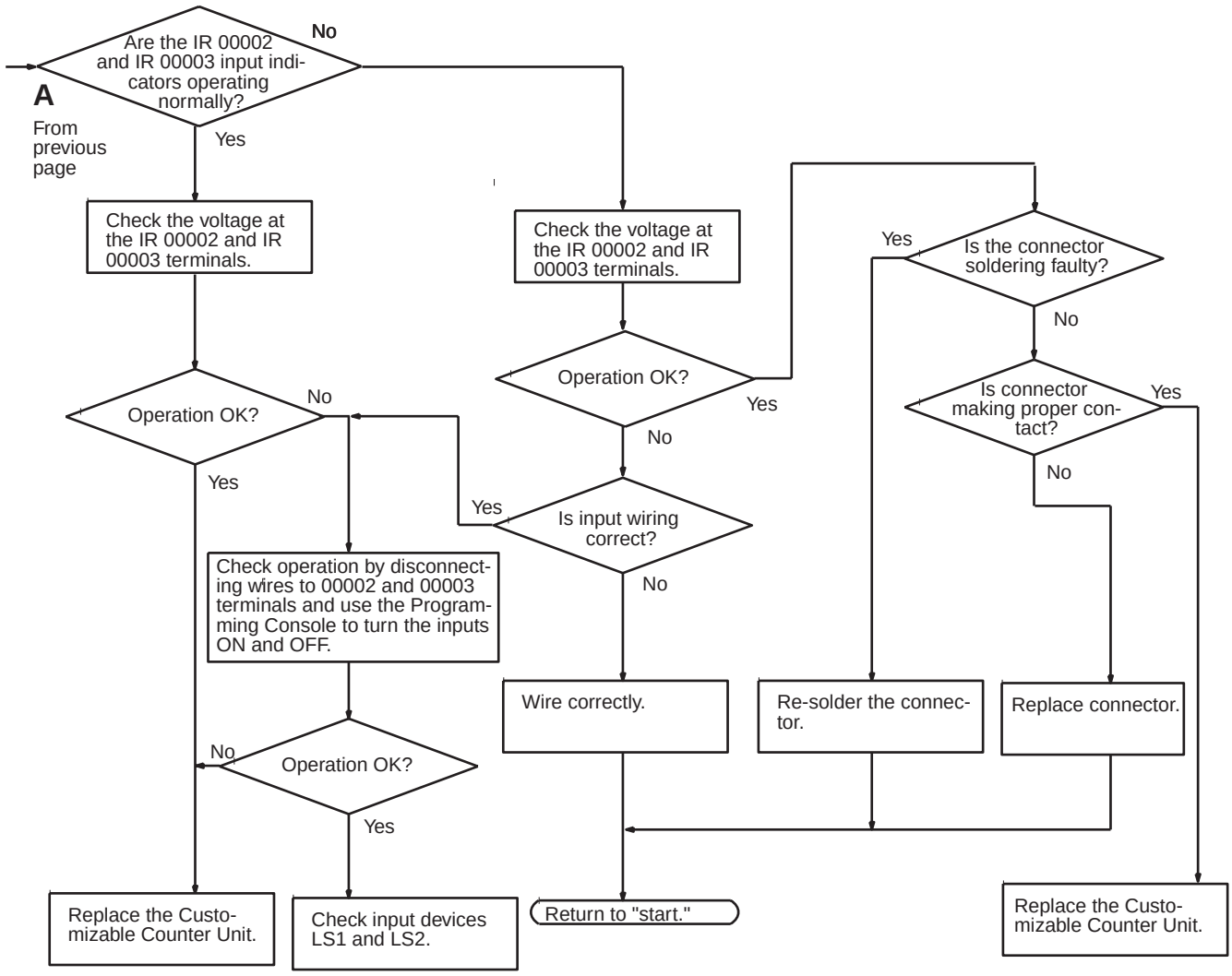
Are the IR 00002 and IR 00003 input indicators operating normally?
No
Yes
A
From previous page
Check the voltage at the IR 00002 and IR 00003 terminals.
Check the voltage at the IR 00002 and IR 00003 terminals.
Operation OK?
No
Yes
Operation OK?
Yes
No
Is input wiring correct?
Yes
No
Is the connector soldering faulty?
Yes
No
Is connector making proper contact?
Yes
No
Check operation by disconnecting wires to 00002 and 00003 terminals and use the Programming Console to turn the inputs ON and OFF.
Operation OK?
No
Yes
Wire correctly.
Re-solder the connector.
Replace connector.
Replace the Customizable Counter Unit.
Check input devices LS1 and LS2.
Return to "start."
Replace the Customizable Counter Unit.

Environmental Conditions Check

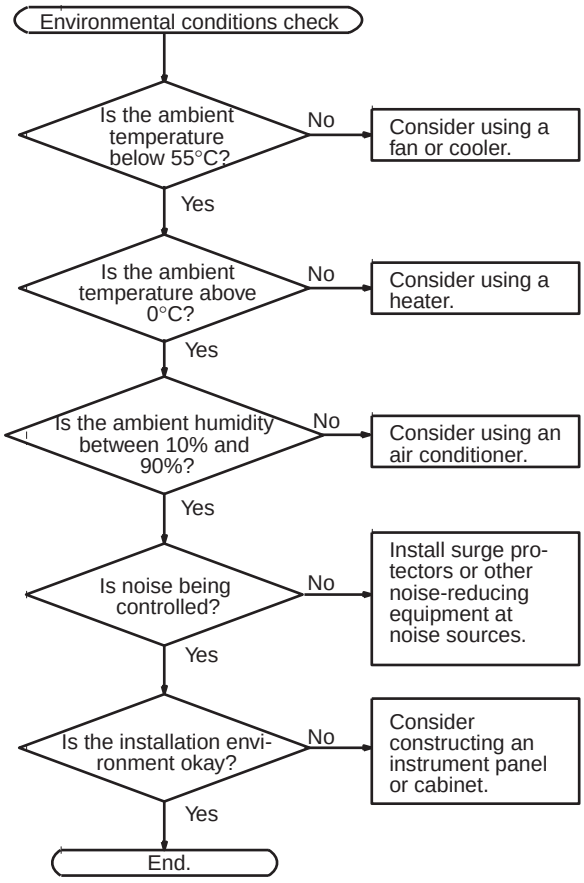

Appendix A
Precautions when Using the CX-Programmer

This appendix describes precautions and restrictions encountered when using the CX-Programmer with the Customizable Counter Unit. When using the CX-Programmer with the Customizable Counter Unit, set the Device type/CPU model to “CQM1H-CPU61.”

Restrictions

Due to functional differences, the following CX-Programmer functions cannot be used with the Customizable Counter Unit (because it is set at a “CQM1H-CPU61”). Do not attempt to use these functions.

Function	Operation
Editing, transferring, or comparing PLC Setup	PLC – Edit – PC Setup (including PLC and Transfer for Transfer/Verify)
Reading the error log	PLC – Edit – Error log – Error Log Tab
Reading setting the clock	PLC – Edit – Clock
Reading/setting forced-status for PLC memory	PLC – Edit – Memory – Address Tab – Forced Status
Setting or executing data traces	PLC – Data Trace
Displaying PLC information while online	PLC – Edit – Information

Correct information will not be obtained and data will not be written if the above operations are performed.

⚠ **Caution** A write error will occur if an attempt is made to transfer the PLC Setup to the Customizable Counter Unit. When transferring the program to the Customizable Counter Unit, remove the checkmark from PLC Setup before executing the transfer. An error will occur if this checkmark is not removed. Set the Unit Setup Area using normal DM Area editing functions.

Always following the precautions given later in this appendix when using any of the following functions.

- Reading the error log in the Customizable Counter Unit
- Setting the Unit Setup Area (DM 6600 to DM 6655)
- Monitoring the cycle time of the Customizable Counter Unit

Precautions

Observe the following precautions when using the CX-Programmer connected to the Customizable Counter Unit.

Setting the Device Type and CPU Model

In the Change PLC Dialog Box, set the Device Type to “CQM1H,” the CPU Model to “CPU61,” and the Network Type to “Toolbus.”

Using Instructions Not Supported by the CQM1H

The TMHH and MOVL instructions are not supported by the CQM1H. Use the following method to input them.

1. Set bits 08 to 11 of DM 6600 in the User Setup Area to 1 Hex to enable user settings for expansion instructions.
2. Double-click “Expansion Instructions” in the project workspace in CX-Programmer.
3. In the Expansion Instruction Mapping Dialog Box, select PMCR instead of TMHH and 7SEG instead of MOVL and allocate them in the setting table.
4. Use the above instructions (PMCR and 7SEG) in programming for TMHH and MOVL. (Use DIFU to create an upwardly differentiated version of 7SEG for MOVL; @ cannot be used for 7SEG.)

5. Select PLC – Transfer – To PLC, check Programs and Expansion Instructions, and then click the OK Button.

Specifying Operand Addresses Not Supported by the CQM1H

The program cannot be transferred from the CX-Programmer to the Customizable Counter Unit if the following operand values are set for STIM or ACC.

STIM: C2 = 001 or C3 = 001 to 003 when C1 = 011 or 012

ACC: M = 004 to 007

Either input the instructions from the Programming Console or use dummy operands and then correct them from the Programming Console after transferring the program to the Customizable Counter Unit.

Note The program can be read from the Customizable Counter Unit to the CX-Programmer even if the above operand values are set.

Setting the Unit Setup Area (DM 6600 to DM 6655)

To read or edit the Unit Setup Area, specify the DM Area addresses directly from the Memory Window. The Memory Window can be accessed by selecting PLC – Edit – Memory from the Main Menu.

Reading the Error Log

To read the error log, specify the DM Area addresses (DM 6145 to DM 6199) directly from the Memory Window.

Checking the Ladder Program Size

The ladder program size, EM Area settings, and similar information cannot be checked from the CX-Programmer because the “Device Type” is set to the CQM1H. To check the ladder program size, select View – Cross-Reference Report and then subtract the unused UM size from the total UM size to determine the amount of UM that has been used. The program cannot be transferred to the Customizable Counter Unit if the UM Area size is exceeded.

Monitoring the Cycle Time

The cycle time displayed when PLC – Edit – Cycle Time is selected will be 10 times the actual cycle time of the Customizable Counter Unit. For example, if the CX-Programmer displays 10 ms, the cycle time is 1 ms.

Startup Operating Mode

If the User Setup Area is set to startup in the mode specified on the Programming Console (i.e., bits 00 to 07 of allocated DM Area word m are set to 01 Hex) and the CX-Programmer is connected to the peripheral port on the Customizable Counter Unit with an CS1W-CN226/626 or CS1W-CN118 + XW2Z-200/500S-CV Cable, the Customizable Counter Unit will start in RUN mode.

Change from Programming Console Cable to CX-Programmer Cable

If the cable connecting the Programming Console is removed and the cable connecting the CX-Programmer is connected within 2 seconds, the CX-Programmer will not go online.

PLC Information Display

The PLC information display cannot be used. (The information for the CQM1H will be displayed.)

Symbol Names

Some of the CQM1H global symbols and memory area settings registered in advance on the CX-Programmer are not correct for the Customizable Counter Unit. These are listed in the following tables.

- The following symbols cannot be used when inputting instruction operands.

CQM1H symbol name	CQM1H memory contents		Customizable Counter Unit area function corresponding to CQM1H address
	Function	CQM1H address	
P_Sec_Min	Upper bytes: Minutes Lower bytes: Seconds	AR 18	Special I/O area (pulse outputs or analog outputs)
P_Hour_Date	Upper bytes: Day of month Lower bytes: Hours	AR 19	Special I/O area (pulse outputs or analog outputs)
P_Low_Battery	Battery Low Flag	SR 25308	Reserved by system.
P_Month_Year	Upper bytes: Year Lower bytes: Month	AR 20	Special I/O area (pulse outputs or analog outputs)
P_Output_off_bit	Load OFF Bit	SR 25215	Reserved by system.

- If the following symbol is used in an instruction operand, change it to the correct address for the Customizable Counter Unit (SR 23509: Unit Cycle Time Over Flag).

CQM1H symbol name	CQM1H memory contents		Customizable Counter Unit area function corresponding to CQM1H address
	Function	CQM1H address	
P_Cycle_Time_Error	Cycle time over flag	SR 25309	Reserved by system.

Index

A-B

absolute positioning, 5, 7
ACC
  and analog outputs, 5, 142
  and pulse outputs, 134
acceleration/deceleration, 5
accessories
  standard, 22
advanced processing
  overview, 6
Always OFF Flag, 97
Always ON Flag, 97
Analog Output Conversion Enable Bits, 108, 115
Analog Output Units, 2
Analog Output User Adjustment Flags, 108, 115
analog outputs, 5, 20
  applicable instructions, 141
  details, 30, 32, 138
  END refreshing, 139
  functions, 140
  immediate refreshing, 26, 139
  number of, 5, 138
  refresh methods, 30, 32, 139
  settings, 84
  signal ranges, 30, 32, 138
  specifications, 138
  used with ACC, 5, 142
  used with fail-safe circuits, 57
  used with SPED, 5
  values, 107, 114, 139
  wiring example, 48
analog slope control, 2
applications
  examples, 7
  high-speed, 2
  precautions, xiv
APR
  using linear approximation, 7
AR Area, 86
  allocation, 24
  details, 98
  pulse inputs, 99
  pulse outputs, 104
audience
  intended, xii
backing up data, xvi

C

Carry (CY) Flag, 98
checksum error, 96
CIO Area
  words shared with SR Area in Unit, 6
clock, 27
common processing, 23
conditional ON/OFF outputs, 5
connectors
  front panel, 21
  types, 50
  wiring, 50
Connector-Terminal Block Conversion Units, 17, 38
contact I/O
  connecting, 17
  specifications, 33
contact inputs, 20
  circuit configuration, 33
  details, 28
  number of, 5
  specifications, 33
contact outputs, 20
  failures, 57
  number of, 5
  specifications, 34
control circuits
  precautions, xiii
coordinating operation with CPU Unit, 6
Counter Mode, 25, 124
counter reset method, 82, 147
counting mode, 82, 147
CPU Racks, 39
CPU Unit Error Flag, 96
crimp terminals
  precautions, xv
CTBL
  faster execution, 6
current consumption
  internal, 22
Customizable Counter Units
  models, 14
  overview, 2
CX-Programmer, 17, 53, 55
  precautions when using, 221
cycle monitor time, 80
cycle time
  calculating, 189
  constant, 26, 80, 96
  current, 98
  data exchange effects, 22
  details, 189
  effects on operation, 190
  example, 190
  exceeded (10 ms) detection, 81
  maximum, 98
  monitoring, 26, 222
  overview, 189
  precautions, xiii
  processes, 189
  reading, 54
cyclic refreshing, 26
cyclic scan, 22

D

data
  automatic backup, xvi
  backing up, xvi
  exchanging with CPU Unit, 6, 20, 21, 59
  tracing, 54
data exchange areas
  overview, 60
debugging, 26
Differential Monitor Completion Flag, 97
differential monitoring, 26
dimensions, 22
display, 21
DM Area
  allocation, 24
  backing up to flash memory, xviii
  details, 91
  precautions, xv
  read/write words, 91
  read-only words, 92
  Unit Setup Area, 92
  words allocated to Special I/O Units, 20
  words shared with user-set words in Unit, 6
  words used as I/O memory, 87
DM Area to Flash Memory Transfer Bit, 97

E

EC Directives, xviii
editing
  online, 26
Electronic Cam Mode, 5, 7
EM Area
  allocation, 24
  and faster execution of instructions, 6
  details, 92
emergency stop circuits, 56
encoder outputs, 7
Equals (EQ) Flag, 98
error codes, 204
  Special I/O Units, 205
error log, 27, 212
  details, 204
  reading, 54, 222
Error Log Area
  allocation, 25
  details, 91
Error Log Reset Bit, 97
execution modes, 22
Expansion Racks, 39
external interrupt tasks
  using MCRO, 6

F-G

fail-safe circuits, 56
FAL(06), 212
FALS(07), 212
  precaution for, xiii
First Cycle Flag, 97
flags
  AR Area, 99, 104
  SR Area, 97
flash memory
  backing up DM Area, xviii
  data contents, 21
  precautions, 187
forced set/reset, 27, 54
  precautions, xv
frequency outputs, 5
functions
  overview diagram, 121
general precautions, xii
general-purpose I/O words, 70
Greater Than (GR) Flag, 98
ground terminals
  precautions, xv

H

Hand-held Programming Consoles, 53
High-speed Counter Operating Flag, 101, 112
High-speed Counter Reset Bit, 102, 103, 113
High-speed Counter Start Bit, 100, 102, 103, 111, 113
High-speed Counter Units, 2
high-speed counters, 5, 7
  and control bit status, 5
  clearing or holding PV, 5
  commands, 102, 103, 113
  input frequency measurements, 5
  interrupts, 2, 122
  monitor data, 103, 114
  PV, 99, 110, 148
  PV at startup, 82
  rate-of-change measurement, 82
  status, 100, 101, 111, 112
High-speed Execution Mode, 6, 191
high-speed interrupt I/O processing
  used for refreshing outputs, 7

I

I/O
  overview, 2
I/O connector, 38
  connections to, 50
I/O connector pins
  arrangement, 34, 42
I/O control methods, 22
I/O memory, 24, 85
  areas, 86
  overview, 86
  status held or cleared, 88
I/O points
  built-in, 20
I/O refresh time
  and analog outputs, 5
I/O refreshing
  types, 26
I/O response time
  details, 199
  maximum, 200
  minimum, 199
  See also timing
immediate refreshing, 26, 107, 114
indicators, 21, 38
initial settings
  errors, 70
  from CPU Unit, 20
  methods, 21
Input Area
  allocation, 24
  function, 86
Input Interrupt Mode, 25
inputs, 2
  contact, 20, 28
  interrupt, 20, 122
  pulse frequency, 82, 147
  refreshing, 69
  response, 33
  voltage/current, 33
installation, 39
Instruction Execution Error (ER) Flag, 98
instructions
  basic, 191
  execution time, 22, 191
  expansion, 195
  length, 22
  number of, 22
  special, 191
INT
  used to enable/disable interrupts, 123
interlock circuits, 56, 57
intermediate processing, 22
interrupt functions
  details, 122
Interrupt Input Mode, 124
interrupt inputs, 20, 80
  details, 124
  ON delay, 200
  specifications, 124
interrupt processing
  disabling/enabling all interrupts, 123
  example, 201
  executing tasks in CPU Unit, 125
  maximum response time, 201
  minimum response time, 201
  priorities, 122
  timing, 200
  types of interrupts, 25
interrupt programs, 2, 7
  executing, 122
interval timer interrupts, 2, 25, 122
IORF
  used for immediate refreshing, 26
  used for refreshing outputs, 7

L-M

label
  precautions, xv
ladder program, 2
  capacity, 5
  size, 222
LED indicators, 21
Less Than (LE) Flag, 98
linear approximation
  using APR, 7
Linear Counter Mode, 99, 100, 111, 148
line-driver output, 47
LR Area, 86
  allocation, 24
  details, 90
maximum switching capacity
  precautions, xv
MCRO, 26
  arguments, 93
  used for external interrupt tasks, 6, 26, 122
    procedure, 125
  variables, 93
Measurement Direction Specification Bit, 102, 113
measurement mode, 82
Measurement Start Bit, 102, 103, 113
Measuring Flag, 101, 112
memory
  protection at power interruption, 27
  shared with CPU Unit, 6
models
  Customizable Counter Units, 14, 20
  Programming Consoles, 17
momentary power interruption, 187
mounting
  dimensions, 53
  method, 21, 40

N

Negative (N) Flag, 97
Normal Execution Mode, 6, 191
normal interrupts, 2
Number of Pulses Specified Flag, 105

O

One-shot Interrupt Mode, 25
one-shot pulse outputs, 5, 7, 29, 130
  specifications, 133
online editing, 26
open-collector output, 46
operating environment
  precautions, xiii
operating mode
  changing the, xv
  types, 22
operations
  effects on cycle time, 190
  flowchart (overview), 186
  internal processing
    flowchart, 186
Output Area
  allocation, 24
  function, 86
output bit patterns, 103, 107, 114
Output Conversion Enable Bits, 5
output OFF function, 27
outputs, 2
  analog, 20
  contact, 20
  pulse, 20
  refreshing, 69
  transistor, 20
Overflow (OF) Flag, 97
Overflow/Underflow Flag, 100, 101, 111
overview
  Customizable Counter Units, 2

P

PC clock, 54
PC information display, 54
PC Setup, 54
performance specifications, 20
peripheral bus, 27
peripheral port, 21, 27, 38
  baud rate, 81
  communications error, 97
  communications settings, 69, 81
  error codes, 97
  servicing time, 80
Peripheral Port Reset Bit, 97
Phase-Z Input Reset Flag, 100, 101, 111
Position Control Units, 2
power interruptions
  momentary interruptions, 187
  Programmable Controller, 187
  startup operation after, 189
power OFF processing, 187
precautions, xi
  applications, xiv
  changing PC operating mode, xv
  circuit failures, xiv
  crimp terminals, xv
  CX-Programmer, 221
  cycle time, xiii
  DM Area, xv
  external control circuits, xiii
  flash memory, 187
  forced set/reset, xv
  general, xii
  ground terminals, xv
  label, xv
  maximum switching capacity, xv
  operating environment, xiii
  safety, xii
  user program, xv
present value pulse inputs, 5
processing
  common, 23
program
  checking, 27
  protection, 26
program capacity, 20
  for ladder program in Unit, 5
  in Normal and High-speed Execution Modes, 22
Programming Console bus, 27
Programming Consoles, 55
  connections, 55
  models, 17
Programming Devices, 17, 22, 53
  connection switch, 38
  settings, 54
  supported functions, 54
PULS
  using to change number of output pulses, 7
pulse counters, 2
pulse inputs, 5
  applicable instructions, 129
  AR Area, 99
  details, 29
  mode, 82, 147
  number of, 5
  range comparison, 26
  specifications, 126
  target value interrupts, 25
  wiring example, 45
Pulse Output Completed Flag, 105
pulse outputs, 5, 20
  applicable instructions, 134
  AR Area, 104

commands, 106
counter used as timer, 29, 130
details, 29, 130
frequencies for speed control, 5
interrupts, 122
modes, 131
number of, 5, 132
PV storage location, 132
range comparison, 26
ranges, 5
resetting the PV, 5
settings, 83
signals, 132
specifications, 131
status, 105
target value interrupts, 25
used for speed control, 7
values for absolute positioning, 5
wiring example, 47

R-S

Racks
applicable, 39
number of mountable Units, 39
RAM
data backup, xvi
range comparison
bit pattern outputs, 5, 26
results, 103, 107, 114
Range Comparison Result Clear Bit, 102, 103, 113
range comparisons
for present value, 2
rate-of-change measurements, 5
related manuals, ix
Ring Counter Mode, 100, 111
rotational angles, 5, 7
RUN/STOP Command Bit, 63, 65, 189
RUN/STOP specification, 22
safety, xii
safety circuits, 56
Scheduled Interrupt Mode, 25
self-diagnosis function, xiii, 21, 27
serial communications modes, 27
serial communications port, 27
setting switches, 21
severe failure alarm (FALS), xiii
sloped outputs
rising or falling, 5
special I/O
connecting, 17, 38, 50
connector pin arrangement, 43
Special I/O Setup Area, 79
details, 82
Special I/O Unit Area, 20
Special I/O Units
allocated CIO words, 39
error codes, 205
specifications
contact I/O, 33
performance, 20
SPED
and analog outputs, 5
and pulse outputs, 134
speed control, 5
by pulse output, 7
speeds
changing in Electric Cam Mode, 7
SR Area, 86
allocation, 24
details, 93
words shared with CIO Area in CPU, 6
startup operating mode, 222
status
output to CPU unit, 22
STEP Execution Flag, 97
STIM
and one-shot pulse outputs, 7
super-capacitor backup, 21
switches
Programming Device connection, 38
unit numbers, 37
synchronizing processing with other Units, 6
SYSMAC BUS Slave Racks, 39
system configuration, 14
CS1W-HCA22, 16
CS1W-HCP22, 15
CS1W-HIO01, 14

T

table data
instructions using, 6
Target Comparison Mode, 100, 111
Target Value Comparison Flag, 101
target value interrupts, 2, 5, 7
pulse inputs, 25
pulse outputs, 25
terminal blocks
precautions, xv
timer instructions
combined with analog outputs, 5
Timer/Counter Area
allocation, 24
function, 86
timing
basic instructions, 191
cycle time, 189
I/O response time, 199
interrupt processing, 200
special instructions, 191
TR Area, 86
allocation, 24
details, 89

transistor outputs, 20
trapezoid frequency outputs, 5
troubleshooting
  flowcharts, 213
  tables, 206

U

Underflow (UF) Flag, 97
Unit classification, 20
Unit errors, 57
  codes, 94
unit numbers, 20
  switches, 37
Unit Setup Area
  allocation, 25
  and Programming Device connection, 54
  and write protection, 26
  details, 77
  overview, 78
  settings enabled at startup, 79
  settings enabled at startup and start of operation, 80
Unit Setup Area Reset Bit, 97
user memory
  capacity exceeded, 96
  protection, 26, 79
user program
  precautions, xv
user-set words in CPU
  shared with LR Area words in Unit, 6
user-set words in Unit
  shared with DM Area in CPU, 6

W

weight, 22
wiring, 42
  connectors, 50
  methods, 49, 50
  wire size, 50
Work Area
  allocations, 24
  function, 86
write protection, 26

Revision History

A manual revision code appears as a suffix to the catalog number on the front cover of the manual.

Cat. No. W378-E1-02

Revision code

The following table outlines the changes made to the manual during each revision. Page numbers refer to the previous version.

Revision code	Date	Revised content
01	January 2001	Original production
02	December 2003	Revisions and additions as follows: • Information on -V1 Units. • Information on CS1W-HCA12-V1.

OMRON CORPORATION
FA Systems Division H.Q.
66 Matsumoto
Mishima-city, Shizuoka 411-8511
Japan
Tel: (81)55-977-9181/Fax: (81)55-977-9045

Regional Headquarters

OMRON EUROPE B.V.
Wegalaan 67-69, NL-2132 JD Hoofddorp
The Netherlands
Tel: (31)2356-81-300/Fax: (31)2356-81-388

OMRON ELECTRONICS LLC
1 East Commerce Drive, Schaumburg, IL 60173
U.S.A.
Tel: (1)847-843-7900/Fax: (1)847-843-8568

OMRON ASIA PACIFIC PTE. LTD.
83 Clemenceau Avenue,
#11-01, UE Square,
Singapore 239920
Tel: (65)6835-3011/Fax: (65)6835-2711

OMRON

Authorized Distributor:

Cat. No. W378-E1-02

Note: Specifications subject to change without notice.

Printed in Japan

This manual is printed on 100% recycled paper.

Read and Understand this Manual

Please read and understand this manual before using the product. Please consult your OMRON representative if you have any questions or comments.

Warranty and Limitations of Liability

WARRANTY

OMRON's exclusive warranty is that the products are free from defects in materials and workmanship for a period of one year (or other period if specified) from date of sale by OMRON.

OMRON MAKES NO WARRANTY OR REPRESENTATION, EXPRESS OR IMPLIED, REGARDING NON-INFRINGEMENT, MERCHANTABILITY, OR FITNESS FOR PARTICULAR PURPOSE OF THE PRODUCTS. ANY BUYER OR USER ACKNOWLEDGES THAT THE BUYER OR USER ALONE HAS DETERMINED THAT THE PRODUCTS WILL SUITABLY MEET THE REQUIREMENTS OF THEIR INTENDED USE. OMRON DISCLAIMS ALL OTHER WARRANTIES, EXPRESS OR IMPLIED.

LIMITATIONS OF LIABILITY

OMRON SHALL NOT BE RESPONSIBLE FOR SPECIAL, INDIRECT, OR CONSEQUENTIAL DAMAGES, LOSS OF PROFITS OR COMMERCIAL LOSS IN ANY WAY CONNECTED WITH THE PRODUCTS, WHETHER SUCH CLAIM IS BASED ON CONTRACT, WARRANTY, NEGLIGENCE, OR STRICT LIABILITY.

In no event shall the responsibility of OMRON for any act exceed the individual price of the product on which liability is asserted.

IN NO EVENT SHALL OMRON BE RESPONSIBLE FOR WARRANTY, REPAIR, OR OTHER CLAIMS REGARDING THE PRODUCTS UNLESS OMRON'S ANALYSIS CONFIRMS THAT THE PRODUCTS WERE PROPERLY HANDLED, STORED, INSTALLED, AND MAINTAINED AND NOT SUBJECT TO CONTAMINATION, ABUSE, MISUSE, OR INAPPROPRIATE MODIFICATION OR REPAIR.

Application Considerations

SUITABILITY FOR USE

OMRON shall not be responsible for conformity with any standards, codes, or regulations that apply to the combination of products in the customer's application or use of the products.

At the customer's request, OMRON will provide applicable third party certification documents identifying ratings and limitations of use that apply to the products. This information by itself is not sufficient for a complete determination of the suitability of the products in combination with the end product, machine, system, or other application or use.

The following are some examples of applications for which particular attention must be given. This is not intended to be an exhaustive list of all possible uses of the products, nor is it intended to imply that the uses listed may be suitable for the products:

- Outdoor use, uses involving potential chemical contamination or electrical interference, or conditions or uses not described in this manual.
- Nuclear energy control systems, combustion systems, railroad systems, aviation systems, medical equipment, amusement machines, vehicles, safety equipment, and installations subject to separate industry or government regulations.
- Systems, machines, and equipment that could present a risk to life or property.

Please know and observe all prohibitions of use applicable to the products.

NEVER USE THE PRODUCTS FOR AN APPLICATION INVOLVING SERIOUS RISK TO LIFE OR PROPERTY WITHOUT ENSURING THAT THE SYSTEM AS A WHOLE HAS BEEN DESIGNED TO ADDRESS THE RISKS, AND THAT THE OMRON PRODUCTS ARE PROPERLY RATED AND INSTALLED FOR THE INTENDED USE WITHIN THE OVERALL EQUIPMENT OR SYSTEM.

PROGRAMMABLE PRODUCTS

OMRON shall not be responsible for the user's programming of a programmable product, or any consequence thereof.

Disclaimers

CHANGE IN SPECIFICATIONS

Product specifications and accessories may be changed at any time based on improvements and other reasons.

It is our practice to change model numbers when published ratings or features are changed, or when significant construction changes are made. However, some specifications of the products may be changed without any notice. When in doubt, special model numbers may be assigned to fix or establish key specifications for your application on your request. Please consult with your OMRON representative at any time to confirm actual specifications of purchased products.

DIMENSIONS AND WEIGHTS

Dimensions and weights are nominal and are not to be used for manufacturing purposes, even when tolerances are shown.

PERFORMANCE DATA

Performance data given in this manual is provided as a guide for the user in determining suitability and does not constitute a warranty. It may represent the result of OMRON's test conditions, and the users must correlate it to actual application requirements. Actual performance is subject to the OMRON Warranty and Limitations of Liability.

ERRORS AND OMISSIONS

The information in this manual has been carefully checked and is believed to be accurate; however, no responsibility is assumed for clerical, typographical, or proofreading errors, or omissions.