Cat. No. W375-E1-05

生産終了
DISCONTINUED

SYSMAC CS Series
CS1W-LC001

Loop Control Unit

Version 2.5

FUNCTION BLOCK REFERENCE MANUAL

OMRON

CS1W-LC001

Loop Control Unit

FUNCTION BLOCK REFERENCE MANUAL

Revised August 2003

Notice:

OMRON products are manufactured for use according to proper procedures by a qualified operator and only for the purposes described in this manual.
The following conventions are used to indicate and classify precautions in this manual. Always heed the information provided with them. Failure to heed precautions can result in injury to people or damage to property.

⚠DANGER	Indicates an imminently hazardous situation which, if not avoided, will result in death or serious injury.
⚠WARNING	Indicates an imminently hazardous situation which, if not avoided, could result in death or serious injury.
⚠Caution	Indicates an imminently hazardous situation which, if not avoided, may result in minor or moderate injury, or property damage.

OMRON Product References

All OMRON products are capitalized in this manual. The work "Unit" is also capitalized when it refers to an OMRON product, regardless of whether or not it appears in the proper name of the product.
The abbreviation "Ch" which appears in some displays and on some ONROM products, often means "word" and is abbreviated "Wd" in documentation in this sense.
The abbreviation "PC" means Programmable Controller and is not used as an abbreviation for anything else.

Visual Aids

The following headings appear in the left column of the manual to help you locate different types of information.

Note Indicates information of particular interest for efficient and convenient operation of the product.

1, 2, 3... 1. Indicates lists of one sort or another, such as procedures, checklists, etc.

©OMRON, 2000

All rights reserved. No part of this publication may be reproduced, stored in a retrieval system, or transmitted, in any form, or by any means, mechanical, electronic, photocopying, recording, or otherwise, without the prior written permission of OMRON.

No patent liability is assumed with respect to the use of the information contained herein. Moreover, because OMRON is constantly striving to improve its high-quality products, the information contained in this manual is subject to change without notice. Every precaution has been taken in the preparation of this manual. Nevertheless, OMRON assumes no responsibility for errors or omissions. Neither is any liability assumed for damages resulting from the user of the information contained in this publication.

About this Manual:

This manual describes the installation and operation of the CS1W-LC001 Loop Control Unit, and includes the sections described below.

The CS1W-LC001 Loop Control Unit (CS1W-LC001) helps you build an instrumentation system comprising multiple loops and is intended as a CPU Bus Unit on a PLC (Programmable Controller).

Please read this manual and the other manuals related to the CS1W-LC001 Loop Control Unit carefully and be sure you understand the information provided before attempting to install and operate the Loop Control Unit.

There are four manuals used with the CS1W-LC001. These manuals are listed in the following table. The suffixes have been omitted from the catalog numbers. Be sure you are using the most recent version for your area.

Name	Cat. No. (Suffixes omitted)	Contents
SYSMAC CS1 Series CS1W-LC001 Loop Control Unit Function Block Reference Manual	W375	Provides detailed information on the function blocks.
SYSMAC CS1 Series CS1W-LC001 Loop Control Unit Operation Manual	W374	Describes the basic running of the Loop Control Unit (excluding detailed descriptions of the function blocks).
SYSMAC CS1 Series WS02-LCTC1 CX-Process Tool Operation Manual	W372	Describes operation of the CX-Process Tool.
SYSMAC CS1 Series WS02-LCTC1 CX-Process Monitor Operation Manual	W373	Describes operation of the CX-Process Monitor.

Section 1 provides an overall list of the function blocks provided on CS1W-LC001 Loop Control Units and describes how they can be applied to specific control operations.

Section 2 describes the functions of each function block and details of ITEM settings.

Appendix provides information on errors that may occur during running of CS1W-LC001 Loop Control Units and guidelines for troubleshooting these errors.

⚠WARNING Failure to read and understand the information provided in this manual may result in personal injury or death, damage to the product, or product failure. Please read each section in its entirety and be sure you understand the information provided in the section and related sections before attempting any of the procedures or operations given.

Restrictions in Use of Function Blocks According to Version

- The following function blocks described in this manual can be used only when Loop Control Unit CS1W-LC001 Ver.1.20 and onwards and CX-Process Tool Ver.1.20 and onwards are used:
  - The following function blocks can be registered on CX-Process Tool when Loop Control Unit Ver.1.0□ and CX-Process Tool Ver1.20 or onwards are used. However, if the data of these function blocks is downloaded to the Loop Control Unit in major item units (units of Loop Control Unit) when these function blocks are registered on CX-Process Tool, an error occurs, and the download is canceled. (Other function blocks also are not downloaded.)
  - The following function blocks cannot be registered on CX-Process Tool when Loop Control Unit Ver.1.20 and onwards and CX-Process Tool Ver.1.00 are used. For this reason, these function blocks cannot also be downloaded to the Loop Control Unit.
    If the following function blocks already exist on the Loop Control Unit and are uploaded to CX-Process Tool, only the following function blocks are not uploaded. (When a new upload is performed, these blocks become empty.)

2-position ON/OFF (Block Model 001), 3-position ON/OFF (Block Model 002), Blended PID (Block Model 013), 3-input Selector (Block Model 163), 3-output Selector (Block Model 164), Batch Data Collector (Block Model 174), DI terminal from Expanded CPU Unit (Block Model 455), DO Terminal from Expanded CPU Unit (Block Model 456), AI Terminal from Expanded CPU Unit (Block Model 457), AO Terminal from Expanded CPU Unit (Block Model 458)

Note The version of the Loop Control Unit can be verified in the Monitor run status screen ([Execute]-[Run]-[Monitor run status]) on CX-Process Tool.
When the above function blocks are used, check in the Check System Operation screen on CX-Process Tool beforehand that the content of ITEM 099 onwards in the System Common block (Block Model 000) is as follows:

ITEM	Data name	Data
099	MPU/FROM version indication	V1.20V1.20

Version V1.20 and onwards must be indicated.

- The following function blocks described in this manual can be used only when Loop Control Unit CS1W-LC001 Ver.1.50 and onwards and CX-Process Tool Ver.1.50 and onwards are used:
  - The following function blocks can be registered on CX-Process Tool when versions of Loop Control Unit earlier than Ver.1.50 (Ver.1.0□ or Ver.1.20) and CX-Process Tool Ver1.50 or onwards are used. However, if the data of these function blocks is downloaded to the Loop Control Unit in major item units (units of Loop Control Unit) when these function blocks are registered on CS-Process Tool, an error occurs, and only those function blocks are not downloaded. (Other function blocks are downloaded successfully.)

- The following function blocks cannot be registered on CX-Process Tool when Loop Control Unit Ver.1.50 and onwards and versions of CX-Process

  Tool earlier than Ver.1.50 (Ver.1.00 or Ver. 1.20) are used. For this reason, these function blocks cannot also be downloaded to the Loop Control Unit.
  If the following function blocks already exist on the Loop Control Unit and are uploaded to CX-Process Tool, only the following function blocks are not uploaded. (When a new upload is performed, these blocks become empty.)

Segment Program 2 (Block Model 157), Accumulated Value Input Adder (Block Model 182), Accumulated Value Input Multiplier (Block Model 183), Constant Comparator (Block Model 202), Variable Comparator (Block Model 203), Clock Pulse (Block Model 207), ON/OFF Valve Manipulator (Block Model 221), Motor Manipulator (Block Model 222), Reversible Motor Manipulator (Block Model 223), Motor Opening Manipulator (Block Model 224)

  Likewise, the following functions can be used only when Loop Control Unit CS1W-LC001 Ver.1.50 and onwards and CX-Process Tool Ver.1.50 and onwards are used:

- The following ITEMs can be set on CX-Process Tool when versions of Loop Control Unit earlier than Ver.1.50 (Ver.1.0□ or Ver.1.20) and CX-Process Tool Ver1.50 or onwards are used. However, if the data of these ITEMs is downloaded to the Loop Control Unit when these ITEMs are set on CX-Process Tool, only those ITEMs are not downloaded. (Other ITEMs are downloaded successfully.)
- The following ITEMs cannot be set on CX-Process Tool when Loop Control Unit Ver.1.50 or onwards and versions of CX-Process Tool earlier than Ver.1.50 (Ver.1.00 or Ver. 1.20) are used. For this reason, these ITEMs cannot also be downloaded to the Loop Control Unit.
  If a download in major item units (units of Loop Control Unit) or a download in function blocks units including initial setting data is performed, the respective defaults are set to the following ITEMs on the Loop Control Unit.
  If the following ITEMs are already set on the Loop Control Unit and are uploaded to the CX-Process Tool, only the following ITEMs are not uploaded.

AT (auto-tuning) functions of Basic PID block (Block Model 011) and Advanced PID (Block Model 012), and wait function and additional steps (step numbers 8 to 15) of the Ramp Program block (Block Model 155)

Note1 For details on which actual ITEM this restriction applies to, refer to the ITEM list for the relevant function block in the Function Block Reference Manual.

Note2 The version of the Loop Control Unit can be verified in the Monitor run status screen ([Execute]-[Run]-[Monitor run status]) on CX-Process Tool.
When the above function blocks are used, check in the Check System Operation screen on CX-Process Tool beforehand that the content of ITEM 099 onwards in the System Common block (Block Model 000) is as follows:

ITEM	Data name	Data
099	MPU/FROM version indication	V1.50V1.50

Version V1.50 and onwards must be indicated.

- The following function blocks described in this manual can be used only when Loop Control Unit CS1W-LC001 Ver. 2.00 and onwards and CX-Process Tool Ver. 2.00 and onwards are used:
  - The following function blocks can be registered on CX-Process Tool when versions of Loop Control Unit earlier than Ver. 2.00 (Ver. 1.0□, Ver. 1.20, or Ver. 1.50) and CX-Process Tool Ver 1.50 or onwards are used. However, if the data of these function blocks is downloaded to the Loop Control Unit in major item units (units of Loop Control Unit) when these function blocks are registered on CX-Process Tool, an error occurs, and only those function blocks are not downloaded. (Other function blocks are downloaded successfully.)
  - The following function blocks cannot be registered on CX-Process Tool when Loop Control Unit Ver. 2.00 and onwards and versions of CX-Process Tool earlier than Ver. 2.00 (Ver. 1.00 Ver. 1.20, or Ver. 1.50) are used. For this reason, these function blocks cannot also be downloaded to the Loop Control Unit.
    If the following function blocks already exist on the Loop Control Unit and are uploaded to CX-Process Tool, only the following function blocks are not uploaded. (When a new upload is performed, these blocks become empty.)

ES100X Controller Terminal (Block Model 045), 4-point Warning Indicator (Block Model 110), Arithmetic Operation (Block Model 126), Time Sequence Data Statistics (Block Model 153), Receive All Blocks (Block Model 461), Send All Blocks (Block Model 462)

Likewise, the following functions can be used only when Loop Control Unit CS1W-LC001 Ver. 2.00 and onwards and CX-Process Tool Ver. 2.00 and onwards are used:

- The following ITEMs can be set on CX-Process Tool when versions of Loop Control Unit earlier than Ver. 2.00 (Ver. 1.00 Ver. 1.20, or Ver. 1.50) and CX-Process Tool Ver, 2.00 or onwards are used. However, if the data of these ITEMs is downloaded to the Loop Control Unit when these ITEMs are set on CX-Process Tool, only those ITEMs are not downloaded. (Other ITEMs are downloaded successfully.)
- The following ITEMs cannot be set on CX-Process Tool when Loop Control Unit Ver. 2.0 or onwards and versions of CX-Process Tool earlier than Ver. 2.00 (Ver. 1.00 Ver. 1.20, or Ver. 1.50) are used. For this reason, these ITEMs cannot also be downloaded to the Loop Control Unit.
  If a download in major item units (units of Loop Control Unit) or a download in function blocks units including initial setting data is performed, the respective defaults are set to the following ITEMs on the Loop Control Unit.
  If the following ITEMs are already set on the Loop Control Unit and are uploaded to the CX-Process Tool, only the following ITEMs are not uploaded.

MV Output Retrace Time for PV Error has been added to 2-position ON/OFF (Block Model 001), 3-position ON/OFF (Block Model 002), Basic PID (Block Model 011), and Advanced PID (Block Model 012). High MV Limit Output and Low MV Limit Output have been added to Basic PID (Block Model 011), Indication and Operation (Block Model 032), and Ratio Setting (Block Model 033). MV Error Input and MV Error Display have been added to Batch Flowrate Capture (Block Model 014), Indication and Operation (Block Model 032), and Ratio Setting (Block Model 033). PV Error Input and PV Error Display have been added to Indication and Setting (Block Model 031), Indication and Operation (Block Model 032), Ratio Setting (Block Model 033), and Indicator (Block Model 034). Inputs X1 to X8 have been added to Constant Comparator (Block Model 202). Inputs X1 to X8 and Comparison Input R1 to R8 have been added to Variable Comparator (Block Model 203) Contact Inputs S33 to S224 have been added to Internal Switch (Block Model 209).

Note1 For details on which actual ITEM this restriction applies to, refer to the ITEM list for the relevant function block in the Function Block Reference Manual.

Note2 The version of the Loop Control Unit can be verified in the Monitor run status screen ([Execute]-[Run]-[Monitor run status]) on CX-Process Tool.
When the above function blocks are used, check in the Check System Operation screen on CX-Process Tool beforehand that the content of ITEM 099 onwards in the System Common block (Block Model 000) is as follows:

ITEM	Data name	Data
099	MPU/FROM version indication	V2.00V2.00

Version V2.00 and onwards must be indicated.

- The following function blocks described in this manual can be used only when Loop Control Unit CS1W-LC001 Ver.2.50 and onwards and CX-Process Tool Ver.2.50 and onwards are used:
  - The following function blocks can be registered on CX-Process Tool when the Loop Control Unit is pre-Ver.2.50 and the CX-Process Tool is Ver 2.50 or later. However, if the data of these function blocks is downloaded to the Loop Control Unit in major item units (units of Loop Control Unit) when these function blocks are registered on CX-Process Tool, an error occurs, and the download is canceled. (Other function blocks will be downloaded normally.)
  - The following function blocks cannot be registered on CX-Process Tool when the Loop Control Unit is Ver. 2.50 or later and CX-Process Tool is pre-Ver.2.50. For this reason, these function blocks cannot also be downloaded to the Loop Control Unit.
    If the following function blocks already exist on the Loop Control Unit and are uploaded to CX-Process Tool, only the following function blocks are not uploaded. (When a new upload is performed, these blocks become empty.)

    Fuzzy Logic (Block Model 016), Range Conversion (Block Model 127), Level Check (Block Model 210), Ai4 Terminal (DRT1-AD04) (Block Model 588), Ao2 Terminal (DRT1-DA02) (Block Model 589)

Likewise, the following functions can be used only when Loop Control Unit CS1W-LC001 Ver. 2.50 or onwards and CX-Process Tool Ver. 2.50 or onwards are used:

- The following ITEMs can be set on CX-Process Tool when versions of Loop Control Unit earlier than Ver. 2.50 and CX-Process Tool Ver. 2.50 or onwards are used. However, if the data of these ITEMs is downloaded to the Loop Control Unit when these ITEMs are set on CX-Process Tool, only those ITEMs are not downloaded. (Other ITEMs are downloaded successfully.)
- The following ITEMs cannot be set on CX-Process Tool when Loop Control Unit Ver. 2.50 or onwards and versions of CX-Process Tool earlier than Ver. 2.50 are used. For this reason, these ITEMs cannot also be downloaded to the Loop Control Unit.
  If a download in major item units (units of Loop Control Unit) or a download in function blocks units including initial setting data is performed, the respective defaults are set to the following ITEMs on the Loop Control Unit.
  If the following ITEMs are already set on the Loop Control Unit and are uploaded to the CX-Process Tool, only the following ITEMs are not uploaded.

Block Registration Flag (ITEM 039) and Tool Version (ITEM 110) in System Common (Block Model 000). Warning Limit (ITEM 012) in Basic PID (Block Model 011, Advanced PID (Block Model 020), 2-Position ON/OFF (Block Model 001), 3-Position ON/OFF (Block Model 002), Indication and Setting (Block Model 031), Indication and Operation (Block Model 032), Ratio Setting (Block Model 033), Indicator (Block Model 034), and 4-Point Warning Indicator (Block Model 110). SP Rate-of-change Limit Time Unit (ITEM 030) in Advanced PID (Block Model 012). Local SP Setting, Upper 4 Digits (ITEM 024), Remote SP Setting, Upper 4 Digits (ITEM 028), Current SP Value, Upper 4 Digits (ITEM 030), Preset Value, Upper 4 Digits (ITEM 061), and Batch Accumulated Value, Upper 4 Digits (ITEM 065) in Batch Flowrate (Block Model 014). Time Unit (ITEM 013) in Rate-of-change Limit (Block Model 143). Reference Input Disable Switch (ITEM 020) in Segment Program 2 (Block Model 157). Output Type (ITEM 006) in Contact Distributor (Block Model 201). Range settings in AI Terminal from CPU Unit (Block Model 453), AO Terminal to CPU Unit (Block Model 454), Ai4 Terminal (Block Model 561), Pi4 Terminal (Block Model 562), and Ai8 Terminal (Block Model 564). Receive Disable Switch (ITEM 225) in Expanded DI Terminal from CPU Unit (Block Model 455) and Expanded AI Terminal from CPU Unit (Block Model 457) and Send Disable Switch (ITEM 225) in Expanded DO Terminal from CPU Unit (Block Model 456) and Expanded AO Terminal from CPU Unit (Block Model 458).

Note1 For details on which actual ITEM this restriction applies to, refer to the ITEM list for the relevant function block in the *Function Block Reference Manual*.

Note2 The version of the Loop Control Unit can be verified in the Monitor run status screen ([Execute]-[Run]-[Monitor run status]) on CX-Process Tool.
When the above function blocks are used, check in the Check System Operation screen on CX-Process Tool beforehand that the content of ITEM 099 onwards in the System Common block (Block Model 000) is as follows:

ITEM	Data name	Data
099	MPU/FROM version indication	V2.50V2.50

Version V2.50 and onwards must be indicated.

Precautions

This section provides general precautions for using the Programmable Controller (PLC) and related devices.

The information contained in this section is important for the safe and reliable application of the Programmable Controller. You must read this section and understand the information contained before attempting to set up or operate a PLC system.

1 Intended Audience 10
2 General Precautions 10
3 Safety Precautions 11
4 Operating Environment Precautions 12
5 Application Precautions 13
6 EC Directives 15
7 Applicable Directives 16

1 Intended Audience

This manual is intended for the following personnel, who must also have knowledge of electrical systems (an electrical engineer or the equivalent) and knowledge about instrumentation system.
•Personnel in charge of installing FA systems
•Personnel in charge of designing FA systems
•Personnel in charge of managing FA systems and facilities

2 General Precautions

The user must operate the product according tot he performance specifications described in the operation manuals.
Before using the product under conditions which are not described in this manual or applying the product to nuclear control systems, railroad systems, aviation systems, vehicles, combustion systems, medical equipment, amusement machines, safety equipment, petrochemical plants, and other systems, machines, and equipment that may have a serious influence on lives and property if used improperly, consult your OMRON representative.
Make sure that the ratings and performance characteristics of the product are sufficient for the systems, machines, and equipment, and be sure to provide the system, machines and equipment with double safety mechanism.
This manual provides information for running OMRON Loop Control Units. Be sure to read this manual before attempting to use the Loop Control Units and related software (CX-Process Tool and CX-Process Monitor) and keep this manual close at hand for reference during running.

⚠WARNING

It is extremely important that a PLC and all PLC Units be used for the specified purpose and under the specified conditions, especially in applications that directly or indirectly affect human life. You must consult with your OMRON representative before applying a PLC System to the above-mentioned applications.

3 Safety Precautions

⚠WARNING

Do not attempt to take any Unit apart while power is being supplied. Doing so may result in electric shock.

⚠WARNING

Provide safety measures in external circuits (i.e., not in the Programmable Controller), including the following items, to ensure safety in the system if an abnormality occurs due to malfunction of the PLC or another external factor affecting the PLC operation. Not doing so may result in serious accidents.

- Emergency stop circuits, interlock circuits, limit circuits, and similar safety measures must be provided in external control circuits.
- The PLC will turn OFF all outputs when its self-diagnosis function detects any error or when a severe failure alarm (FALS) instruction is executed. As a countermeasure for such errors, external safety measures must be provided to ensure safety in the system.
- The PLC outputs may remain ON or OFF due to deposition or burning of the output relays or destruction of the output transistors. As a countermeasure for such problems, external safety measures must be provided to ensure safety in the system.
- When the 24-VDC output (service power supply to the PLC) is overloaded or short-circuited, the voltage may drop and result in the outputs being turned OFF. As a countermeasure for such problems, external safety measures must be provided to ensure safety in the system.

⚠WARNING

Check the following items before starting to run the Loop Control Unit:

- Analog Input/Output Units used in combination with the Loop Control Unit must be mounted correctly, and the unit number set on the front panel of the Analog Input/Output Unit must match the unit number set on the Field Terminal block. If the unit numbers do not match, input/output (read/write) is performed on the data of another Special I/O Unit (whose unit number is set on the Field Terminal block).
- The defaults of the System Common block on the Loop Control Unit must be set correctly. In particular, make sure that the Data Memory (D) for the Node Terminals on the CPU Unit used by the Loop Control Unit is not set in duplicate for other applications on the PLC. If the application of the Data Memory is set in duplicate, the PLC system may act unexpectedly and cause injury.
- When writing data to the I/O memory in the CPU Unit with function blocks (e.g., using Send All Blocks, Expanded DO/AO Terminal to CPU Unit, or DO/AO Terminal to CPU Unit), be sure that the words written to in the I/O memory are not being used for any other purpose. If I/O memory words are allocated to more than one purpose, the PLC system may act unexpectedly and cause injury.

⚠WARNING

Do not perform processing in such a way that the Loop Control Unit and CPU Unit perform writing on identical I/O memory addresses allocated to an contact output or analog output to an external Unit. If writing is performed on identical addresses, the externally connected load may act unexpectedly and cause injury.

4 Operating Environment Precautions

⚠Caution

Do not operate the control system in the following places:
•Locations subject to direct sunlight
•Locations subject to temperature or humidity outside the range specified in the specifications
•Locations subject to condensation as the result of severe changes in temperature
•Locations subject to corrosive or flammable gases
•Locations subject to dust (especially iron dust) or salts
•Locations subject to exposure to water, oil, or chemicals
•Locations subject to shock or vibration

⚠Caution

Take appropriate and sufficient countermeasures when installing systems in the following locations:
•Locations subject to static electricity or other forms of noise
•Locations subject to strong electromagnetic fields
•Locations subject possible exposure to radioactivity
•Locations close to power supplies

⚠Caution

The operating environment of the PLC System can have a large effect on the longevity and reliability of the system. Improper operating environments can lead to malfunction, failure, and other unforeseeable problems with the PLC System. Be sure that the operating environment is within the specified conditions at installation and remains within the specified conditions during the life of the system.

5 Application Precautions

Observe the following precautions when using the PLC.

⚠WARNING

Always heed these precautions. Failure to abide by the following precautions could lead to serious or possibly fatal injury.

- Always connect to a class-3 ground (to 100 Ω or less) when installing the Units. Not connecting to a class-3 ground may result in electric shock.
- Always turn OFF the power to the PLC before attempting any of the following. Not turning OFF the power may result in malfunction or electric shock.
  - Mounting or dismounting I/O Units
  - Assembling the Units
  - Setting DIP switches or unit number setting switches
  - Connecting or wiring the cables
  - Connecting or disconnecting the connectors

⚠Caution

Failure to abide by the following precautions could lead to faulty operation of the PLC or the system, or could damage the PLC or PLC Units. Always heed these precautions.

- The Loop Control Unit can read and write I/O memory on the CPU Unit using the Field Terminal block or CPU Terminal block regardless of the user program (Step Ladder Program) on the CPU nit. So, do not write to the same I/O memory address in communications between the Loop Control Unit and the CPU Unit.
- To hold analog outputs or contact outputs at specific values (for example, maximum value or minimum value) when the Loop Control Unit has stopped running, create a Step Ladder Program on the CPU Unit so that each of the allocated relays on the Analog Output Unit or Contact Output Unit are set to a specific value taking the b contact of the Loop Control Unit Running flag (bit 00 allocated relay n word) as the input conditions.
- When a fatal error occurs on the CPU Unit (including during execution of the FALS command), the Loop Control Unit also stops running. To hold the analog output to the previous value before the stop occurred, and to set the analog output to either the minimum value or maximum value, use the output hold function of the Analog Output Unit or Analog Input/Output Unit.
- Before turning ON the power to the PLC, make sure that the facilities are safe.
  The analog output values and contact outputs from the Loop Control Unit are updated at the same time that the power to the PLC is turned ON regardless of the operation mode of the CPU Unit (including the PROGRAM mode). (Internally, the analog output values and contact outputs are sent via the CPU Unit to the Basic I/O Unit and Analog Output Unit.)
- The Loop Control Unit itself does not have a human-machine interface. So, an external interface such as CX-Process Monitor must be provided.

⚠Caution

- Fail-safe measures must be taken by the customer to ensure safety in the event of incorrect, missing, or abnormal signals caused by broken signal lines, momentary power interruptions or other causes.
- Before touching the PLC, be sure to first touch a grounded metalic object in order to discharge any static build-up.
  Otherwise, it might result in a malfunction or damage.
- Before you replace the battery while the Loop Control Unit is ON, be sure to touch a grounded metal object to discharge any static electricity from your body
- Never short-circuit the plus and minus poles of the battery, charge, disassemble or heat the battery, or throw the battery into a fire.
- Interlock circuits, limit circuits, and similar safety measures in external circuits (i.e. not in the Programmable Controller) must be provided by the customer.
- Always use the power supply voltage specified in this manual. An incorrect voltage may result in malfunction or burning.
- Take appropriate measures to ensure that the specified power with the rated voltage and frequency is supplied. Be particularly careful in places where the power supply is unstable. An incorrect power supply may result in malfunction.
- Install external breakers and take other safety measures against short-circuiting in external wiring. Insufficient safety measures against short-circuiting may result in burning.
- Do not apply voltages to input sections in excess of the rated input voltage. Excess voltages may result in burning.
- Do no apply voltages or connect loads in excess of the maximum switching capacity to output sections. Excess voltage or leads may result in burning.
- Turn OFF the power to the PLC before performing the following operations:
  - Mounting or removing the Loop Control Unit, CPU Unit, or the Memory Pack
  - Assembling Racks
  - Setting the DIP switch or unit number setting switch
  - Performing wiring or connecting cables
  - When connecting or disconnecting cables
- Do not attempt to disassemble, repair, or modify any Units.
- Be sure to confirm that the DIP switch and the Data Memory (D) are properly set.
- Leave the dust-protection label attached to the top Unit when wiring. Removing the label may result in malfunction.
- Remove the labels after the completion of wiring to ensure proper heat dissipation. Leaving the label attached may result in malfunction.
- Mount the Unit only after checking the terminal block and switch settings completely.
- Be sure that all mounting screws, terminal screws, and cable connector screws are tightened to the torque specified in the user manuals.
  Incorrect tightening torque may result in malfunction.

⚠Caution

- Check the user program for proper execution before actually running it on the Unit. Not checking the program may result in an unexpected operation.
- Use crimp terminals for wiring. Do not connected stranded wires directly to terminals. Connection of bare stranded wires may result in burning.
- Double-check all the wiring before turning ON the power supply. Incorrect wiring may result in burning.
- Confirm that no adverse effect will occur in the system before attempting any of the following:
  - Changing the operating mode of the PLC
  - Force-setting/force-resetting of any contact in memory
- Changing the present value or any set value in memory

6 EC Directives

CS Series Units confirm to EC Directives. For the system to conform to EC Directives, however, the following precautions must be adhered to.

- CS Series Units must be installed within control panel.
- Use reinforced insulation of double insulation for the DC power supplies used for the I/O power supplies.
- CS Series Units that meet EC Directives also meet the Common Emission Standard (EN50081-2). The measure necessary to ensure that standards, such as the radiated emission standard (10 m), are met, however, will vary depending on the overall configuration of the control panel, the other devices to the control panel, and wiring. You must therefore confirm that EC Directives are met for the overall machine or device.

7 Applicable Directives

Applicable Directives

- EMC Directive
- Low Voltage Directive

EMC and Low Voltage Directives

EMC Directive

In order that OMRON products can be used with any machinery and in combination with other manufacturer's equipment, the products themselves are designed to comply with EMC standards (see Note), so that the assembled machinery or device can then also easily comply with EMC standards.
Even if machinery and equipment complies with EMC standards before assembly, this compliance may change depending on the device, the configuration of the control panel, and wiring, so OMRON cannot guarantee that a particular system complies with the directive. You must therefore confirm that EMC Directives are met for the overall machine or device.

Note EMC: One directive relating to Electro-Magnetic Compatibility
EMS: Electro-Magnetic Susceptibility standard EN61131-2
EMI: Electro-Magnetic Interference standard EN50081-2
Common Emission Standard EN50081-2, radiated emission standard (10 m)

Low Voltage Directive

The Low Voltage Directive provides that necessary safety standards are guaranteed for devices operating at voltages of 50 to 1,000 VAC or 75 to 1,500 VDC.

TABLE OF CONTENTS

SECTION 1 List of Function Blocks 21

1-1 List of Function Blocks 22

1-2 How to Use Function Blocks for Specific Operations 28

SECTION 2 Description of Function Blocks 33

Conventions Used in Function Block Descriptions 37

System Common blocks

<000> System Common blocks 000 (fixed) 38

Control blocks

<001> 2-position ON/OFF 001 to 032 50

<002> 3-position ON/OFF 001 to 032 56

<011> Basic PID 001 to 032 63

<012> Advanced PID 001 to 032 78

<013> Blended PID 001 to 032 91

<014> Batch Flowrate Capture 001 to 032 98

<016> Fuzzy Logic 001 to 032 104

<031> Indication and Setting 001 to 032 116

<032> Indication and Operation 001 to 032 120

<033> Ratio Setting 001 to 032 124

<034> Indicator 001 to 032 128

External Controller block

<045> ES100X Controller Terminal 065 to 096 131

Alarm/Signal restriction/Hold blocks

<110> 4-Point Warning Indicator 100 to 349 143

<111> High/Low Alarm 100 to 349 146

<112> Deviation Alarm 100 to 349 148

<113> Rate-of-change Operation and Alarm 100 to 349 150

<115> High/Low Limit 100 to 349 152

<116> Deviation Limit 100 to 349 154

<118> Analog Signal Hold 100 to 349 156

Arithmetic blocks
<121> Addition or Subtraction 100 to 349 158
<122> Multiplication 100 to 349 160
<123> Division 100 to 349 162
<126> Arithmetic Operation 100 to 349 164
<127> Range Conversion 100 to 349 171

Function blocks
<131> Square Root 100 to 349 174
<132> Absolute Value 100 to 349 176
<133> Non-linear Gain (Dead Band) 100 to 349 178
<134> Low-end Cutout 100 to 349 180
<135> Segment Linearizer 100 to 349 181
<136> Temperature and Pressure Correction 100 to 349 184

Time Function blocks
<141> First-order Lag 100 to 349 186
<143> Rate-of-change Limit 100 to 349 188
<145> Moving Average 100 to 349 190
<147> Lead/Delay 100 to 349 192
<148> Dead Time 001 to 032 194
<149> Dead Time Compensation 100 to 349 196
<150> Accumulator for instantaneous value input 100 to 349 198
<151> Run Time Accumulator 100 to 349 202
<153> Time Sequence Data Statistics 100 to 349 204
<155> Ramp Program 100 to 349 208
<156> Segment Program 100 to 349 217
<157> Segment Program 2 100 to 349 221

Signal Selection/Switching blocks
<161> Rank Selector 100 to 349 234
<162> Input Selector 100 to 349 237
<163> 3-input Selector 100 to 349 240
<164> 3-output Selector 100 to 349 243
<165> Constant Selector 100 to 349 246
<166> Constant Generator 100 to 349 249
<167> Ramped Switch 001 to 032 251

ITEM Setting blocks
<171> Constant ITEM Setting 100 to 349 253
<172> Variable ITEM Setting 100 to 349 256
<174> Batch Data Collector 100 to 349 260

Pulse Train Operation blocks
<182> Accumulated Value Input Adder 100 to 349 263
<183> Accumulated Value Analog Multiplier 100 to 349 266
<184> Accumulator for accumulated value input 100 to 349 269
<185> Contact Input/ Accumulated Value Output 100 to 349 273
<186> Accumulated Value Input/ Contact Output 100 to 349 276

Other blocks
<192> Analog/Pulse Width Converter 100 to 349 279
Sequential Operation blocks
<201> Contact Distributor 100 to 349 281
<202> Constant Comparator 100 to 349 283
<203> Variable Comparator 100 to 349 287
<205> Timer 100 to 349 291
<206> ON/OFF Timer 100 to 349 293
<207> Clock Pulse 100 to 349 295
<208> Counter 100 to 349 297
<209> Internal Switch 100 to 349 299
<210> Level Check 100 to 349 301
Contact Type Control Target
<221> ON/OFF Valve Manipulator 100 to 349 306
<222> Motor Manipulator 100 to 349 310
<223> Reversible Motor Manipulator 100 to 349 315
<224> Motor Opening Manipulator 100 to 349 320
Sequential Control block
<301> Step Ladder Program 400 to 499 326
Node Terminal blocks
<401> DO to Computer 501 to 532 346
<402> AO to Computer 501 to 532 348
<403> 1-Block Send Terminal to Computer 501 to 532 350
<404> 4-Block Send Terminal to Computer 501 to 532 352
<407> DO Terminal to All Nodes 550 to 599 355
<408> AO Terminal to All Nodes 550 to 599 357
<409> DO Terminal Settings from Computer 550 to 599 358
<410> AO Terminal Settings from Computer 550 to 599 360
<414> DI Terminal from All Nodes 600 to 699 362
<415> AI Terminal from All Nodes 600 to 699 364
CPU Unit Terminal Block
<451> DI Terminal from CPU Unit 861 to 876 365
<452> DO Terminal to CPU Unit 861 to 876 367
<453> AI Terminal from CPU Unit 861 to 876 369
<454> AO Terminal to CPU Unit 861 to 876 372
Expanded CPU Unit Terminal blocks
<455> Expanded DI Terminal from CPU Unit 829 to 860 375
<456> Expanded DO Terminal to CPU Unit 829 to 860 377
<457> Expanded AI Terminal from CPU Unit 829 to 860 379
<458> Expanded AO Terminal to CPU Unit 829 to 860 382
Send/Receive All blocks
<461> Receive All Blocks 897 385
<462> Send All Blocks 898 393

Field Terminal Block
<501> DI 8-point Terminal 901 to 980 ····· 396
<502> DI 16-point Terminal 901 to 980 ····· 397
<503> DI 32-point Terminal 901 to 980 ····· 398
<504> DI 64-point Terminal 901 to 980 ····· 399
<511> DO 5-point Terminal 901 to 980 ····· 401
<512> DO 8-point Terminal 901 to 980 ····· 402
<513> DO 12-point Terminal 901 to 980 ····· 403
<514> DO 16-point Terminal 901 to 980 ····· 404
<515> DO 32-point Terminal 901 to 980 ····· 405
<516> DO 64-point Terminal 901 to 980 ····· 406
<518> DI 16-point/DO 16-point Terminal 901 to 980 ····· 407
<525> DI 96-point Terminal 901 to 980 ····· 408
<537> DO 96-point Terminal 901 to 980 ····· 409
<544> DI 48-point/DO 48-point Terminal 901 to 980 ····· 410
<551> AI 8-point Terminal (AD003) 901 to 980 ····· 411
<552> AO 8-point Terminal (DA003/4) 901 to 980 ····· 412
<553> AI 2-point/AO 2-point Terminal (MAD01) 901 to 980 ····· 414
<561> AI 4-point Terminal (PTS01/02/03, PDC01, PTW01) 901 to 980 ····· 416
<562> PI 4-point Terminal (PPS01) 901 to 980 ····· 419
<563> AO 4-point Terminal (PMV01) 901 to 980 ····· 422
<564> AI 8-point Terminal (PTR01/02) 901 to 980 ····· 424
<583> AI 4-point/AO 4-point Terminal (MAD44) 901 to 980 ····· 426
<584> AI 8-point Terminal (AD081) 901 to 980 ····· 428
<585> AO 8-point Terminal (DA08V/C) 901 to 980 ····· 430
<586> AI 4-point Terminal (AD041) 901 to 980 ····· 432
<587> AO 4-point Terminal (DA041) 901 to 980 ····· 434
<588> AI 4-point Terminal (DRT1-AD04) 901 to 980 ····· 436
<589> AO 2-point Terminal (DRT1-DA02) 901 to 980 ····· 438

Appendix A Execution Error Code List ····· 439
Appendix B ITEM Allocations for Send/Receive All Blocks ····· 442
Appendix C List of Data Memory Allocations of Node Terminal Blocks ····· 469

SECTION 1
List of Function Blocks

1-1 List of Function Blocks ····· 22
1-2 How to Use Function Blocks for Specific Operations ····· 28

1-1 List of Function Blocks

The following function blocks can be combined and used in Loop Control Unit operations.

Category	Type	Block Model	Block Name	Function	Allocatable Block Address	Page
System Common Block		000	System Common	Makes settings common to all function blocks and outputs signals for the system.	000	38
Control Block	Controller	001	2-position ON/OFF	2-position type ON/OFF controller	001 to 032	50
		002	3-position ON/OFF	3-position type ON/OFF controller for heating/cooling ON/OFF control		56
		011	Basic PID	Performs basic PID control.		63
		012	Advanced PID	Performs PID with two degrees of freedom control for enabling deviation/MV compensation, MV tracking, etc.		78
		013	Blended PID	Performs PIF control on the cumulative value (cumulative deviation) between the accumulated value PV and accumulated value Remote Set Point.		91
		016	Fuzzy Logic	Outputs up to two analog outputs based on fuzzy logic performed on up to 8 analog inputs.		104
		014	Batch Flowrate Capture	Functions to open the valve at a fixed opening until a fixed batch accumulated value is reached.		98
		031	Indication and Setting	Manual setter with PV indication and and SP setting functions		116
		032	Indication and Operation	Manual setter with PV indication and MV setting functions		120
		033	Ratio Setting	Ratio and bias setter with PV indication and ratio setting function		124
		034	Indicator	PV indicator with PV alarm		128
External Controller Block	External Controller Block	045	ES100X Controller Terminal	Performs monitoring and setting for an ES100X Controller connected directly to the RS-232C port on the Loop Control Unit.	065 to 096	131
Operation Block	Alarm/ Signal restrictions/ Hold	110	4-Point Warning Indicator	Provides the alarm contact outputs for the high/high, high, low, and low/low limits of single analog signals. This function block provides the same function as the Indicator block (model 034).	100 to 349 (Note: 349 is an internal switch in CX-Process Tool (One Block Model 209 is already allocated as the default.))	143
		111	High/Low Alarm	Provides the alarm contact outputs for the high and low limits of single analog signals.		146
		112	Deviation Alarm	Provides the alarm contact outputs for the deviation of two analog signals.		148
		113	Rate-of-change Operation and Alarm	Provides the alarm contact outputs for the high and low limits of rate-of-change operation when the analog signal rate-of-change is output.		150
		115	High/Low Limit	Limits the high and low limits of single analog signals.		152
		116	Deviation Limit	Calculates the deviation between two analog signals, and limits the deviation within that range.		154

Category	Type	Block Model	Block Name	Function	Allocatable Block Address	Page
Operation Block (continued)	Alarm/ Signal restrictions/ Hold (continued)	118	Analog Signal Hold	Holds the maximum, minimum or instantaneous value of single analog signals.		156
	Arithmetic	121	Addition or Subtraction	Performs addition/subtraction with gain and bias on up to 4 analog signals.	100 to 349 (Note: 349 is an internal switch in CX-Process Tool (One Block Model 209 is already allocated as the default.))	158
		122	Multiplication	Performs multiplication with gain and bias on up to 2 analog signals.		160
		123	Division	Performs division with gain and bias on up to 2 analog signals.		162
		126	Arithmetic Operation	Performs various math operation (trigonometric. logarithmic, etc.) on floating-point decimal values converted (to industrial units) from up to 8 analog inputs.		164
		127	Range Conversion	Easily converts up to 8 analog signals simply by inputting the 0% and 100% input values and 0% and 100% output values.		171
	Functions	131	Square Root	Performs square root extraction (with low-end cutout) on single analog signals.		174
		132	Absolute Value	Performs non-linear (3 gain values) operation on single analog signals. Analog signals can also set as a dead band (with different gap).		176
		133	Non-linear Gain (Dead Band)	Outputs the absolute value of single analog signals.		178
		134	Low-end Cutout	Sets output to zero close to the zero point of single analog signals.		180
		135	Segment Linearizer	Converts single analog sigals to 15 segments before the signals is output.		181
		136	Temperature And Pressure Correction	Performs temperature and pressure correction.		184
	Time Function	141	First-order Lag	Performs first-order lag operation on single analog signals.		186
		143	Rate-of-change Limit	Performs rate-of-change restriction on single analog signals.		188
		145	Moving Average	Performs moving average operation on single analog signals.		190
		147	Lead/Delay	Performs lead/delay operation on single analog signals.		192
		148	Dead Time	Performs dead time and first-order lag operations on single analog signals.		194
		149	Dead Time Compensation	Used for Smith's dead time compensation PID control		196
		150	Accumulator for instantaneous value input	Accumulates analog signals, and outputs 8-digit accumulated value signals.		198
		151	Run Time Accumulator	Accumulates the operating time, and outputs the pulse signal per specified time.		202
		153	Time Sequence Data Statistics	Records time sequence data from analog signals and calculates statistics, such as averages and standard deviations.		204
		155	Ramp Program	Ramp program setter for combining ramps for time and hold values.		208

Category	Type	Block Model	Block Name	Function	Allocatable Block Address	Page
Operation Block (continued)	Time functionn (continued)	156	Segment Program	Segment program setter setting the output values with respect to time.	100 to 349 (Note: 349 is an internal switch in CX-Process Tool (One Block Model 209 is already allocated as the default.))	217
		157	Segment Program 2	Segment program setting with wait function for setting the output values with respect to time		221
	Signal Selection/ Switching	161	Rank Selector	Selects the rank of up to 8 analog signals.		234
		162	Input Selector	Selects the specified analog signals specified by the contact signal from up to 8 analog signals.		237
		163	3-input Selector	Selects and outputs one of three analog input signals.		240
	Signal Selection/ Switching (continued)	164	3-output Selector	Outputs one analog input signal in three switched direction.		243
		165	Constant Selector	Selects 8 preset constants by the contact signal.		246
		166	Constant Generator	Outputs 8 independent constants.		249
		167	Ramped Switch	Switches two analog inputs (or constants) with a ramp.		251
	ITEM Settings	171	Constant ITEM Setting	Writes the constant to the specified ITEM at the rising edge of the send command contact.		253
		172	Variable ITEM Setting	Writes the analog signal to the specified ITEM at the rising edge of the send command contact.		256
		174	Batch Data Collector	Stores each of max. 8 analog inputs to buffer by a certain timing within sequential processing.		260
	Pulse Train Operation	182	Accumulated Value Input Adder	Adds up to four accumulated value signals.		263
		183	Accumulated Value Analog Multiplier	Multiplies analog signals by the accumulated value signals.		266
		184	Accumulator for accumulated value input	Converts 4-digit accumulated value signals to 8 digits.		269
		185	Contact input/ Accumulated value output	Counts low-speed contact pulses, and outputs 8-digit accumulated signals.		273
		186	Accumulated Value Input/ Contact Output	Converts 4-digit accumulated value signals to low-speed contact pulses before they are output.		276
	Others	192	Analog/Pulse Width Converter	Changes the ON/OFF duration ratio in a constant cycle duration so that it is proportional to the analog signal.		279
	Sequence Operation	201	Contact Distributor	Connect contact signals between function blocks in a 1:1 connection.		281
		202	Constant Comparator	Compares up to eight sets of analog signals and constants, and outputs the comparison results as contacts.		283
		203	Variable Comparator	Compares up to eight pairs of analog signals, and outputs the comparison results as contacts.		287
		205	Timer	2-stage output type addition timer for forecast values and reached values. Can also output the present value.		291
		206	ON/OFF Timer	Timer for performing ON-OFF operation at preset ON and OFF times.		293
		207	Clock Pulse	Manipulates and monitors ON/OFF valves with open/close limit switches.		295

Category	Type	Block Model	Block Name	Function	Allocatable Block Address	Page
Operation Block (continued)	Sequence Operation (continued	208	Counter	2-stage output type addition timer for forecast values and arrival values. Can also output the current value.	100 to 349 (Note: 349 is an internal switch in CX-Process Tool (One Block Model 209 is already allocated as the default.))	297
		209	Internal Switch	Temporary storage contact for accepting relays in the Step Ladder Program block. (Note: One internal switch is already allocated as "temporary storage" in CX-Process Tool.)		299
		210	Level Check	Checks an analog input for 8 levels and outputs a contact corresponding to the level. The level number is also output as an analog value.<0}		301
	Contact Type Control Target	221	ON/OFF Valve Manipulator	Manipulates and monitors ON/OFF valves with open/close limit switches.		306
		222	Motor Manipulator	Manipulates and monitors motor operation.		310
		223	Reversible Motor Manipulator	Manipulates and monitors reversible motor operation.		315
		224	Motor Opening Manipulator	Inputs a target opening, and manipulates an electric positional-proportional motor.		320
Sequential Control		301	Step Ladder Program	Performs logic sequence and step progression control.	400 to 499	326
Node Terminal	Send to Computer	401	DO to Computer	Sends 128 contacts to the send-to-computer area. When CX-Process Monitor is used, the contact signals to be monitored are connected to this function block.	501 to 532	346
		402	AO to Computer	Sends 16 analog values to the send-to-computer area. When CX-Process Monitor is used, the analog signals to be monitored are connected to this function block.		348
		403	1-Block Send Terminal to Computer	Sends a specified 1 block to the send-to-computer area. When CX-Process Monitor is used, the 1 block to be monitored are connected to this function block.		350
		404	4-Block Send Terminal to Computer	Sends a specified 4 block to the send-to-computer area. When CX-Process Monitor is used, the 4 block to be monitored are connected to this function block.		352
	Send to All Nodes	407	DO Terminal to All Nodes	Sends 32 contacts to nodes on the Controller Link Data Link.	550 to 599	355
		408	AO Terminal to All Nodes	Sends 2 analog values to nodes on the Controller Link Data Link.		357
		409	DO Terminal Settings from Computer	Receives 32 contacts sent from the computer. (Can also be downloaded to the send-to-all nodes area.)		358
		410	AO Terminal Settings from Computer	Receives 2 analog values sent from the computer. (Can also be downloaded to the send-to-all nodes area.)		360
	Receive from All Nodes	414	DI Terminal from All Nodes	Receives 32 contacts sent from nodes on the Controller Link Data Link.	600 to 699	362
		415	AI Terminal from All Nodes	Receives 2 analog values sent from nodes on the Controller Link Data Link.		364

Category	Type	Block Model	Block Name	Function	Allocatable Block Address	Page
CPU Unit Terminal		451	DI Terminal from CPU Unit	Inputs max. 128 points from any leading address in CPU Unit I/O memory (one of CIO, WR, HR, DM and EM area types). (read)	861 to 876	365
		452	DO Terminal to CPU Unit	Outputs max. 128 points from any leading address in CPU Unit I/O memory (one of CIO, WR, HR, DM and EM area types). (read and write)		367
		453	AI Terminal from CPU Unit	Inputs max. 8 words from any leading address in CPU Unit I/O memory (one of CIO, WR, HR, DM and EM area types). (read)		369
		454	AO Terminal to CPU Unit	Outputs max. 8 words from any leading address in CPU Unit I/O memory (one of CIO, WR, HR, DM and EM area types). (read and write)		372
SCADA Interface	Expanded CPU Unit Terminals	455	Expanded DI Terminal from CPU Unit	Inputs any contact data in CPU Unit I/O Memory, and writes max. 64 points on another function block.		375
		456	Expanded DO Terminal from CPU Unit	Inputs the contact data of another function block, and writes max. 64 points on any I/O Memory in the CPU Unit.		377
		457	Expanded AI Terminal from CPU Unit	Inputs any analog data in CPU Unit I/O Memory, and writes max. 64 words on another function block.		379
		458	Expanded AO Terminal from CPU Unit	Inputs the analog data of another function block, and writes max. 64 words on any CPU Unit I/O Memory.		382
	Send/ Receive All Blocks	461	Receive All Blocks	Reads ITEM data specified for Send/ Receive All Blocks for up to 32 Control Blocks, 249 Operation Blocks, and 32 External Controller Blocks starting from a specified address in the I/O memory of the CPU Unit.	897	385
		462	Send All Blocks	Writes ITEM data specified for Send/ Receive All Blocks for up to 32 Control Blocks, 249 Operation Blocks, and 32 External Controller Blocks starting to a specified address in the I/O memory of the CPU Unit.	898	393
Field Terminal	Contact I/O	501	DI 8-point Terminal	Inputs 8 contacts from 8-point Input Unit.	901 to 980	396
		502	DI 16-point Terminal	Inputs 16 contacts from 16-point Input Unit.		397
		503	DI 32-point Terminal	Inputs 32 contacts from 32-point Input Unit.		398
		504	DI 64-point Terminal	Inputs 64 contacts from 64-point Input Unit.		399
		511	DO 5-point Terminal	Outputs 5 contacts from 5-point Output Unit.		401
		512	DO 8-point Terminal	Outputs 8 contacts from 8-point Output Unit.		402
		513	DO12-point Terminal	Outputs 12 contacts from 12-point Output Unit.		403
		514	DO16-point Terminal	Outputs 16 contacts from 16-point Output Unit.		404
		515	DO32-point Terminal	Outputs 32 contacts from 32-point Output Unit.		405
		516	DO64-point Terminal	Outputs 64 contacts from 64-point Output Unit.		406
		518	DI 16-point/ Do16-point Terminal	Inputs and outputs 16 contacts each from 16-point Input/16-point Output Units.		407
		525	DI 96-point Terminal	Inputs 96 contacts from 96-contact Input Units.		408

Category	Type	Block Model	Block Name	Function	Allocatable Block Address	Page
Field Terminal (continued)	Contact I/O (continued)	537	DO 96-point Terminal	Outputs 96 contacts from 96-contact Output Units.		409
		544	DI 48-point/ DO 48-point Terminal	Inputs and outputs 48 contacts each from 48-point Input/48-point Output Units.		410
	Analog I/O	551	AI 8-point Terminal (AD003)	Inputs 8 analog signals from the C200H-AD003.		411
		552	AO 8-point Terminal (DA003/4)	Inputs 8 analog signals from the C200H-DA003/DA003.		412
		553	AI 2-point/ AO 2-point Terminal (MAD01)	Inputs and outputs 2 analog signals each from the C200H-MAD01.	901 to 980	414
		561	AI 4-point Terminal (PTS01/02/03,PDC01, PTW01)	Inputs 4 analog signals from one of CS1W-PTS01 (Isolated-type Thermocouple Input Unit), CS1W-PTS02/03 (Isolated-type Temperature-resistance Thermometer Input Unit), CS1W-PDC01 (Isolated-type Analog Input Unit) or CS1W-PTW01 (2-lead Transmitter Input Unit).		416
		562	PI 4-point Terminal (PPS01)	Inputs 4 instantaneous values and accumulated values each from CS1W-PPS01 (Isolated-type Pulse Input Unit).		419
		563	AO 4-point Terminal (PMV01)	Outputs 4 analog signals from CS1W-PMV01 (Isolated-type Control Output Unit).		422
		564	AI 8-point Terminal (PTR01/02/03)	Inputs 8 analog signals from CS1W-PTR01 (Power Transducer Input Unit) or CS1W-PTR02 (Analog Input Unit (100 mV)).		424
		583	AI 4-point/AO 4-point Terminal (MAD44)	Inputs and outputs 4 analog signals each from the CS1W-MAD44.		426
		584	AI 8-point Terminal (AD081)	Inputs 8 analog signals from the CS1W-AD081.		428
		585	AO 8-point Terminal (DA08V/C)	Outputs 8 analog signals from the CS1W-DA08V/C.		430
		586	AI 4-point Terminal (AD041)	Inputs 4 analog signals from the CS1W-AD041.		432
		587	AO 4-point Terminal (DA041)	Outputs 4 analog signals from the CS1W-DA041.		434
		588	AI 4-point Terminal (DRT1-AD04)	Inputs four analog signals from a DRT1-AD04 DeviceNet Slave Analog Input Unit.		436
		589	AO 2-point Terminal (DRT1-DA02)	Outputs two analog signals from a DRT1-DA02 DeviceNet Slave Analog Output Unit.		438

1-2 How to Use Function Blocks for Specific Operations

To Perform This Specific Operation		Perform The Following	See Page:
Data Exchange	Direct exchange of large amounts of data between the CPU Unit and function blocks for data exchange with a PT (Programmable Terminal) for example	Use the Expanded CPU Unit Terminal blocks (Block Models 455 to 458).	Expanded CPU Unit Terminal blocks
	Continuous data exchange with the CPU Unit	Use the CPU Unit Terminal blocks (Block Models 451 to 454).	CPU Unit Terminal blocks
	Read/write of specified data (ITEMs) from a CPU Unit (including a CPU Unit on a networked PLC) whenever necessary	Execute the CMND (DELIVER COMMAND) instruction in the Step Ladder Program, and issue the FINS command (ITEM read/write command).	Section 6 of the Operation Manual
	Continuous data exchange with a Loop Control Unit at another node	Use Controller Link and the Node Terminal blocks (Send Terminal to All Nodes, Receive Terminal from All Nodes), and execute the Controller Link Data Link (at any setting).	3-3 and Appendix 2 of the Operation Manual
	Continuous monitoring and manipulation of all ITEM data in multiple Control blocks (max. 4 blocks) on CX-Process Monitor	Use the Node Terminal blocks (4-Block Send Terminal to Computer or 1-Block Send Terminal to Computer).	Node Terminal blocks
	Reading/writing specific ITEMs for Control, Operation, and External Controller Blocks with SCADA software	Using Receive All Blocks (Block Model 461) and Send All Blocks (Block Model 462) to transfer Loop Control Unit data using tags created with CX-Process Tool.	*3-4 Exchanging Data with CX-Process Monitorr/SCADA Software and with Other Nodes* in *Operation Manual.*
Run/Stop	Instruction of run start/stop of the Loop Control Unit (all function blocks) from the CPU Unit whenever necessary	Execute the CMND (DELIVER COMMAND) instruction in the Step Ladder Program, and issue the FINS command (ITEM read/write command) to change ITEM 014 (run/stop command) of the System Common block. Or, use the ITEM setting commands (Block Models 171 and 172) to stop ITEM 014 (run/stop command) of the System Common block. (In this case, operation cannot be started.) Note: Operation can also be stopped or started on CX-Process Tool and CX-Process Monitor.	3-2 of the Operation Manual
	Instruction of operation stop/stop cancellation on individual function blocks from the CPU Unit whenever necessary	Execute the CMND (DELIVER COMMAND) instruction in the Step Ladder Program, and issue the FINS command (ITEM read/write command) to change ITEM 000 (stop block operation command) of the relevant block. Note: Arithmetic operation stop/stop cancel on a relevant block can also be indicated by monitoring the run status on CX-Process Tool.	
	Execution of required processing on the CPU Unit according to run status (e.g. in RUN mode, execution error, function block data error) of the Loop Control Unit	Execute the required processing on the CPU Unit taking bits 00 to 05 of the nth leading words of the CPU Bus Unit as the input conditions.	3-3 of the Operation Manual
	Execution of required processing on the Loop Control Unit according to run status (e.g. operation mode, fatal error, Output OFF) of the CPU Unit	Execute the required processing on the Loop Control Unit using the Step Ladder Program block based upon the CPU Unit run status of ITEMs 007 to 011 and 013 in the System Common block.	
High-speed processing	High-speed processing of specific function blocks	Set the operation cycle of the relevant function block to a shorter value.	3-2 of the Operation Maual
High-density monitor	High-density monitoring of analog signals	Monitor analog signals by the Field Terminal blocks (Block Models 501 to 587) and Send to Computer blocks (Block Models 401 to 404)	3-4 of the Operation Manual

To Perform This Specific Operation		Perform The Following	See Page:
Monitoring/ Setting External Controllers	Monitoring and setting a stand-alone external controller.	Connect an ES100X Controller to the RS-232C port on the Loop Control Unit and use the ES100X Controller Terminal (Block Model 045).	ES100X Controller Terminal
Batch Data Collection	Data collection by a certain timing within sequence processing in a batch processing plant	Use the Batch Data Collector block (Block Model 174)	Batch Data Collector block
Analog control	ON/OFF control	Use the 2-position ON/OFF block (Block Model 001).	2-position ON/OFF block
	Heating/cooling ON/OFF control	Use the 3-position ON/OFF block (Block Model 002).	3-position ON/OFF block
	Time-proportional control	Use the Analog/Pulse Width Converter block (Block Model 192).	Analog/Pulse Width Converter block, and 5-1 of the Operation Manual
	Application of input filter on PV	Use the First-order Lag block (Block Model 141).	First-order Lag block
	Application of bias on PV	Use the Ratio Setting block (Block Model 033) or the Addition/Subtraction block (Block Model 121).	Ratio Setting block , Addition/Subtraction block
	Application of ratio on Set Point and PV		
	Input of error between multiple PVs	Use the Addition/Subtraction block (Block Model 121).	Addition/Subtraction block
	Entry of differential pressure transmitter to calculate flowrate	Use the Square Root block (Block Model 131) (with low-end cutout function).	Square Root block
	Entry of pulse output flowmeter for accumulation of flowrate	Use the Pulse Input Unit, and enter to the Accumulator for accumulated value input block (Block Model 184) for continuous accumulation.	Pulse Input Unit, and 5-1 of the Operation Manual
	Temperature and pressure correction	Use the Temperature and Pressure Correction block (Block Model 136).	Temperature and Pressure Correction block
	Setting of the PID constant values for multiple words	Use the Constant Item Setting block (Block Model 171).	Constant Item Setting block, and 5-1 of the Operation Manual
	Switching of multiple Set Point values	Use the Constant Selector block (Block Model 165) or the Constant Item Setting block (Block Model 171).	Constant Selector block and Constant Item Setting block, and 5-1 of the Operation Manual
	Switching of multiple PID sets	Use the Constant Item Setting block (Block Model 171).	211, and 5-1 of the Operation Manual
	Ramp control of Set Point values (program control)	Use the Ramp Program block (Block Model 155) or the Segment Program block (Block Model 156).	Ramp Program block and Segment Program block, and 5-1 of the Operation Manual
	Cascade control	Use a serial connection for the Basic PID block (Block Model 011) or Advanced PID block (Block Model 012).	Basic PID block and Advanced PID, and 5-2 of the Operation Manual
	Dead time compensation control	Use the Dead Time Compensation block (Block Model 149) or the Advanced PID block (Block Model 012).	Dead Time Compensation block and Advanced PID block, and 5-2 of the Operation Manual
	Feedforward control	Use the Advanced PID block (Block Model 012) or the Lead/Delay block (Block Model 147).	Advanced PID block and Lead/Delay block, and 5-2 of the Operation Manual
	Non-interfering control		
	Sample PI control	Use the ON/OFF Timer block (Block Model 206).	ON/OFF Timer block, and 5-2 of the Operation Manual
	PID control with differential gap	Use the Constant Item Setting block (Block Model 171).	Constant Item Setting block
	Selective control	Use the Rank Selector block (Block Model 161).	Rank Selector block
	Using fuzzy control based on knowledge from ambiguous expressions	Use the Fuzzy Logic block (Block Model 016).	Fuzzy Logic block
Special math operations	Performing calculation is engineering units rather than percentages	Use the Arithmetic Operation block (Block Model 126).	Arithmetic Operation block

To Perform This Specific Operation		Perform The Following	See Page:
	Performing special calculations, such as trigonometric or logarithmic operation		
	Calculating statistics (e,g., average, standard deviation, etc) for time sequence data	Use the Time Sequence Data Statistics block (Block Model 153).	Time Sequence Data Statistics block
Accumulation processing	Accumulation (accumulator) of instantaneous analog signals such as flowrate signals on the Loop Control Unit	Use the Accumulator for instantaneous value input block (Block Model 150).	Accumulator for instantaneous value input block, and 5-1 of the Operation Manual
	Continuous accumulation of 4-digit accumulated value signals (repeat signals 0000 to 9999) and conversion to 8-digit signals	Use the Accumulator for accumulated value input block (Block Model 184).	Accumulator for accumulated value input block
	Input and accumulation of low-speed pulse signals such as the power signal	Use the Contact input/Accumulated value output block (Block Model 185).	Contact input/Accumulated value output block
	Notification of accumulated values on a field mechanical counter for contact inputs	Use the Accumulated Value Input/Contact Output block (Block Model 186).	Accumulated Value Input/Contact Output block
	Batch flowrate capture	Use the Batch Flowrate Capture block (Block Model 014).	Batch Flowrate Capture block
	Ratio control of accumulated values	Use the Batch Flowrate Capture block (Block Model 014) and the Blended PID block (Block Model 013).	Batch Flowrate Capture block, Blended PID block
	Addition of accumulated values	Use the Accumulated Value Input Adder block (Block Model 182).	Accumulated Value Input Adder block
	Multiplication of analog signals with accumulated values	Use the Accumulated Value Analog Multiplier block (Block Model 183).	Accumulated Value Analog Multiplier block
Sequence control	AND, OR and other logical operations on the Loop Control Unit	Use the Step Ladder Program block (Block Model 301). Use the Internal Switch block (Block Model 209).	Step Ladder Program block, Internal Switch block, and Appendix-1 of the Operation Manual
	One-shot contact output of the ON input state when the contact state changes from OFF to ON and vice versa only in 1-operation cycles (system common operation cycle)		
	Constantly ON contacts and other system contacts		
	Step progression control and other control on the Loop Control Unit		
	Acceptance of relays in the Step Ladder Program		
	Execution of special processing at each fixed cycle longer than operation cycle in Step Ladder Program	Generate a fixed cycle timing signal by the Clock Pulse block (Block Model 207).	Clock Pulse block
	Execution of timers/counters on the Loop Control Unit	Use the Timer block (Block Model 205) and the Counter block (Block Model 208).	Timer block, Counter block
Constant setting/selec-ti on	Constant transmission of constants as analog signals	Use the Constant Generator block (Block Model 166).	Constant Generator block
	Setting of constants to specified ITEMs under certain conditions	Use the Constant Item Setting block (Block Model 171).	Constant Item Setting block
	Selection of one of multiple constants and transmission of that constant as an analog signal	Use the Constant Selector block (Block Model 165).	Constant Selector block
	Changing PID constants and other parameters in stages according to a process value (e.g., temperature).	Use the Level Check block (Block Model 210) and the Constant ITEM Setting block (Block Model 171) together to change parameters for other blocks according to the level.	Level Check block, Constant ITEM Setting block

To Perform This Specific Operation		Perform The Following	See Page:
Analog signal setting/ selection	Setting of analog signals to specified ITEMs under certain conditions	Use the Variable ITEM Setting block (Block Model 171).	Variable ITEM Setting block
	Selection of one of multiple analog signals and transmission of that analog signal as an analog signal	Use the Input Selector block (Block Model 162).	Input Selector block
	Selection of the maximum value from multiple analog signals and transmission of that maximum value as an analog signal	Use the Rank Selector block (Block Model 161).	Rank Selector block
	Selection of the minimum value from multiple analog signals and transmission of that minimum value as an analog signal		
	Selection of the nth largest value from multiple analog signals and transmission of the signal as an analog signal		
	Switching of sensors on a different measuring system or measurement target	Use the 3-input Selector block (Block Model 163).	3-input Selector block
	Switching of operation nodes on a different measuring system or measurement target	Use the 3-output Selector block (Block Model 164).	3-output Selector block
	Changing two settings with a ramp (e.g., opening and closing valves	Use the Ramped Switch block (Model Block 167).	Ramped Switch block
	Converting ranges of analog signals merely by setting values for 0% and 100% inputs and 0% and 100% outputs	Use the Range Conversion block (Block Model 127).	Range Conversion block
Analog signal/ constant comparison	Comparison of constant and analog signals	Use the Constant Comparator block (Block Model 202).	Constant Comparator block
	Comparison of two analog signals	Use the Variable Comparator block (Block Model 203).	Variable Comparator block
Manipulation/ monitor/ control of special external control target	Manipulation and monitoring of ON/OFF valve with open/close limit switches	Use the ON/OFF Valve Manipulator block (Block Model 221).	ON/OFF Valve Manipulator block
	Manipulation and monitoring of motors	Use the Motor Manipulator block (Block Model 222).	Motor Manipulator block
	Manipulation and monitoring of reversible motors	Use the Reversible Motor Manipulator block (Block Model 223).	Reversible Motor Manipulator block
	Manipulation of a electric positional-proportional motor as the control target	Use the Basic PID (Block Model 011)/Advanced PID block (Block Model 012) and Motor Opening Manipulator block (Block Model 224).	Basic PID, Advanced PID block, Motor Opening Manipulator block

SECTION 2
Description of Function Blocks

Conventions Used in Function Block Descriptions ····· 37

System Common blocks

<000> System Common blocks 000 (fixed) ····· 38

Control blocks

<001> 2-position ON/OFF 001 to 032 ····· 50
<002> 3-position ON/OFF 001 to 032 ····· 56
<011> Basic PID 001 to 032 ····· 63
<012> Advanced PID 001 to 032 ····· 78
<013> Blended PID 001 to 032 ····· 91
<014> Batch Flowrate Capture 001 to 032 ····· 98
<016> Fuzzy Logic 001 to 032 ····· 104
<031> Indication and Setting 001 to 032 ····· 116
<032> Indication and Operation 001 to 032 ····· 120
<033> Ratio Setting 001 to 032 ····· 124
<034> Indicator 001 to 032 ····· 128

External Controller block

<045> ES100X Controller Terminal 065 to 096 ····· 131

Alarm/Signal restriction/Hold blocks

<110> 4-Point Warning Indicator 100 to 349 ····· 143
<111> High/Low Alarm 100 to 349 ····· 146
<112> Deviation Alarm 100 to 349 ····· 148
<113> Rate-of-change Operation and Alarm 100 to 349 ····· 150
<115> High/Low Limit 100 to 349 ····· 152
<116> Deviation Limit 100 to 349 ····· 154
<118> Analog Signal Hold 100 to 349 ····· 156

Arithmetic blocks

<121> Addition or Subtraction 100 to 349 ····· 158
<122> Multiplication 100 to 349 ····· 160
<123> Division 100 to 349 ····· 162
<126> Arithmetic Operation 100 to 349 ····· 164
<127> Range Conversion 100 to 349 ····· 171

Function blocks

<131> Square Root 100 to 349 ····· 174
<132> Absolute Value 100 to 349 ····· 176
<133> Non-linear Gain (Dead Band) 100 to 349 ····· 178
<134> Low-end Cutout 100 to 349 ····· 180
<135> Segment Linearizer 100 to 349 ····· 181
<136> Temperature and Pressure Correction 100 to 349 ····· 184

Time Function blocks

<141> First-order Lag 100 to 349 186
<143> Rate-of-change Limit 100 to 349 188
<145> Moving Average 100 to 349 190
<147> Lead/Delay 100 to 349 192
<148> Dead Time 001 to 032 194
<149> Dead Time Compensation 100 to 349 196
<150> Accumulator for instantaneous value input 100 to 349 198
<151> Run Time Accumulator 100 to 349 202
<153> Time Sequence Data Statistics 100 to 349 204
<155> Ramp Program 100 to 349 208
<156> Segment Program 100 to 349 217
<157> Segment Program 2 100 to 349 221

Signal Selection/Switching blocks

<161> Rank Selector 100 to 349 234
<162> Input Selector 100 to 349 237
<163> 3-input Selector 100 to 349 240
<164> 3-output Selector 100 to 349 243
<165> Constant Selector 100 to 349 246
<166> Constant Generator 100 to 349 249
<167> Ramped Switch 001 to 032 251

ITEM Setting blocks

<171> Constant ITEM Setting 100 to 349 253
<172> Variable ITEM Setting 100 to 349 256
<174> Batch Data Collector 100 to 349 260

Pulse Train Operation blocks

<182> Accumulated Value Input Adder 100 to 349 263
<183> Accumulated Value Analog Multiplier 100 to 349 266
<184> Accumulator for accumulated value input 100 to 349 269
<185> Contact Input/ Accumulated Value Output 100 to 349 273
<186> Accumulated Value Input/ Contact Output 100 to 349 276

Other blocks

<192> Analog/Pulse Width Converter 100 to 349 279

Sequential Operation blocks

<201> Contact Distributor 100 to 349 281
<202> Constant Comparator 100 to 349 283
<203> Variable Comparator 100 to 349 287
<205> Timer 100 to 349 291
<206> ON/OFF Timer 100 to 349 293
<207> Clock Pulse 100 to 349 295
<208> Counter 100 to 349 297
<209> Internal Switch 100 to 349 299
<210> Level Check 100 to 349 301

Contact Type Control Target
<221> ON/OFF Valve Manipulator 100 to 349 306
<222> Motor Manipulator 100 to 349 310
<223> Reversible Motor Manipulator 100 to 349 315
<224> Motor Opening Manipulator 100 to 349 320
Sequential Control block
<301> Step Ladder Program 400 to 499 326
Node Terminal blocks
<401> DO to Computer 501 to 532 346
<402> AO to Computer 501 to 532 348
<403> 1-Block Send Terminal to Computer 501 to 532 350
<404> 4-Block Send Terminal to Computer 501 to 532 352
<407> DO Terminal to All Nodes 550 to 599 355
<408> AO Terminal to All Nodes 550 to 599 357
<409> DO Terminal Settings from Computer 550 to 599 358
<410> AO Terminal Settings from Computer 550 to 599 360
<414> DI Terminal from All Nodes 600 to 699 362
<415> AI Terminal from All Nodes 600 to 699 364
CPU Unit Terminal Block
<451> DI Terminal from CPU Unit 861 to 876 365
<452> DO Terminal to CPU Unit 861 to 876 367
<453> AI Terminal from CPU Unit 861 to 876 369
<454> AO Terminal to CPU Unit 861 to 876 372
Expanded CPU Unit Terminal blocks
<455> Expanded DI Terminal from CPU Unit 829 to 860 375
<456> Expanded DO Terminal to CPU Unit 829 to 860 377
<457> Expanded AI Terminal from CPU Unit 829 to 860 379
<458> Expanded AO Terminal to CPU Unit 829 to 860 382
Send/Receive All blocks
<461> Receive All Blocks 897 385
<462> Send All Blocks 898 393
Field Terminal Block
<501> DI 8-point Terminal 901 to 980 396
<502> DI 16-point Terminal 901 to 980 397
<503> DI 32-point Terminal 901 to 980 398
<504> DI 64-point Terminal 901 to 980 399
<511> DO 5-point Terminal 901 to 980 401
<512> DO 8-point Terminal 901 to 980 402
<513> DO 12-point Terminal 901 to 980 403
<514> DO 16-point Terminal 901 to 980 404
<515> DO 32-point Terminal 901 to 980 405
<516> DO 64-point Terminal 901 to 980 406
<518> DI 16-point/DO 16-point Terminal 901 to 980 407
<525> DI 96-point Terminal 901 to 980 408

<537> DO 96-point Terminal 901 to 980 ····· 409
<544> DI 48-point/DO 48-point Terminal 901 to 980 ····· 410
<551> AI 8-point Terminal (AD003) 901 to 980 ····· 411
<552> AO 8-point Terminal (DA003/4) 901 to 980 ····· 412
<553> AI 2-point/AO 2-point Terminal (MAD01) 901 to 980 ····· 414
<561> AI 4-point Terminal (PTS01/02/03, PDC01, PTW01) 901 to 980 ····· 416
<562> PI 4-point Terminal (PPS01) 901 to 980 ····· 419
<563> AO 4-point Terminal (PMV01) 901 to 980 ····· 422
<564> AI 8-point Terminal (PTR01/02) 901 to 980 ····· 424
<583> AI 4-point/AO 4-point Terminal (MAD44) 901 to 980 ····· 426
<584> AI 8-point Terminal (AD081) 901 to 980 ····· 428
<585> AO 8-point Terminal (DA08V/C) 901 to 980 ····· 430
<586> AI 4-point Terminal (AD041) 901 to 980 ····· 432
<587> AO 4-point Terminal (DA041) 901 to 980 ····· 434
<588> AI 4-point Terminal (DRT1-AD04) 901 to 980 ····· 436
<589> AO 2-point Terminal (DRT1-DA02) 901 to 980 ····· 438

Conventions Used in Function Block Descriptions

Each of the function blocks is described using the following conventions.

Outline

Describes an outline of the functions of the function block.

Function block applications

Gives examples of typical applications that the function block can be used in.

Block diagram

Shows the input ITEMs and output ITEMs of the function block, and internal processes specific to the function block.

ITEM list

- ITEM Type: Indicates the type of ITEM according to the following categories:
  (For details of categories, see 3-1-1 "Configuration of Function Blocks" in the User's Manual.
  Contact input, contact output, analog input, analog output, analog input connection information, accumulated value input, accumulated value output, accumulated value input connection information and parameter
- ITEM: Indicates the ITEM number in ascending order.
- Symbol: Indicates the symbol that is indicated in CX-Process Tool.
  Analog input: X, Analog output: Y, Contact input: S, Contact output: U, etc.
- Data Description: Indicates the name of the ITEM and its content.
- Data Range: Indicates the range of data that can be stored.
- Default: Indicates the default on CX-Process Tool.
- COLD start initialization: Indicates whether the content of the ITEM is initialized when a cold start is performed
- R/W Mode: Indicates which of the following modes each ITEM can be read or written by. (R: Read, W: Write, R/W: R/W-enabled)
  CX-Process Tool, CX-Process Monitor (Tuning screen, Control screen), ITEM Setting blocks (Block Model 171/172), Step Ladder Program (Block Model 301), Send/Receive All Blocks (Block Model 462/461)
  Note: On CX-Process Tool, the R/W mode is indicated by W: Download in file units, R: Upload in file units, r: Read in the Monitor run status screen, r/w: Read/write in Operation Check screen, (S): Default data (can be set only in Support Software), (O): Run data (can be set in both CX-Process Tool and CX-Process Monitor)
- Data length: Indicates the data length (bytes) when each ITEM is read or written by a FINS command. This item has no meaning for other commands.

ITEM TYPE	ITEM	Symbol	Data Description	Data Range	Default	COLD start initialization	R/W Mode R: Read, W: Write, R/W: R/W-enabled, -: R/W-disabled Note: r and r/w: Read and read/write for validate action or monitor run status by CX-Process Tool or Monitor, (S): Initial setting data, (O): Operation data				Data Length (bytes)
							According to CX-Process Tool	According to CX-Process Monitor *1	According to ITEM Setting block	According to Step Ladder Program	
Contact input	(000)		Be sure to set this ITEM to 0. Note:If set to 1, processing for all function blocks stops, and data exchange between the Loop Control Unit and the CPU Unit stops.	0, 1	0	–	–	–	–	–	1
Parameter	001		Comment	23 characters	Block name	–	R/W(S)	–	–	–	24
	002		Block Model: System	000	000	–	–	–	–	–	2

Block Model	Block Name	Block Address
<000>	System Common blocks	000 (fixed)

Outline

This function block sets the functions that are used in common to all function blocks, and outputs various signals for system use and the CPU Unit run status.

Setting of functions common to all function blocks

•Setting of the system common operation cycle
•Run/stop command and run indication
•Indication of the load rate for each operation cycle group
•System indication and setting for node terminals
•Error indication
•Memory processing

Output of CPU Unit run status

•Operating mode, fatal error, output OFF, function block change

Output of Loop Control Unit run/stop command and status

•Output of states for sequence control

Output of various signals for system use

•Output of states for sequence control
•Clock timing output signals
•Calendar and clock output

Block diagram

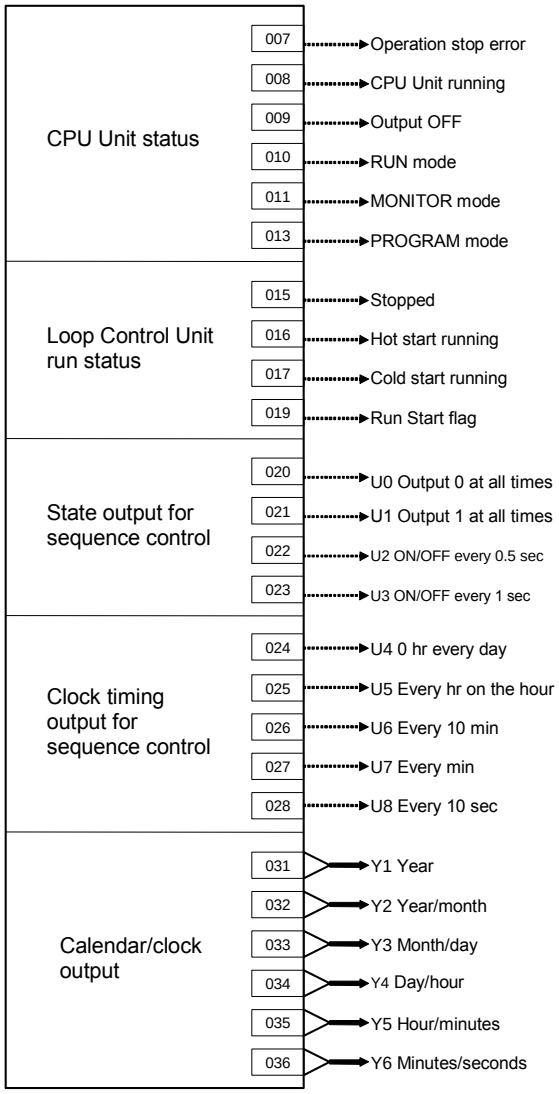

ITEM list

CX-Process Tool must be used to set ITEM004, ITEM042 and ITEM043 in the following list as initial settings when the Loop Control Unit is to be used.

*1:On the CX-Process Monitor, the R/W mode is indicated in the Tuning screen or in the Control screen.

ITEM TYPE	ITEM	Symbol	Data Description	Data Range	Default	COLD start initialization	R/W Mode R: Read, W: Write, R/W: R/W-enabled, -: R/W-disabled Note: r and r/w: Read and read/write for validate action or monitor run status by CX-Process Tool or Monitor, (S): Initial setting data, (O): Operation data				Data Length (bytes)
							According to CX-Process Tool	According to CX-Process Monitor *1	According to ITEM Setting block	According to Step Ladder Program	
Contact input	(000)		Be sure to set this ITEM to 0. Note:If set to 1, processing for all function blocks stops, and data exchange between the Loop Control Unit and the CPU Unit stops.	0, 1	0	–	–	–	–	–	1
Parameter	001		Comment	23 characters	Block name	–	R/W(S)	–	–	–	24
	002		Block Model: System Common	000	000	–	–	–	–	–	2
Special	003		Execution error display 0: Normal, Other: Error(See Appendix "Execution Error Code List.")		0000	–	r	R	–	–	2
Parameter	004		System common operation cycle (sec) 1: 01.s, 2: 0.2s, 3: 0.5s, 4: 1s, 5: 2s Note: Before changing the operation cycle, first stop the Loop Control Unit.,	1 to 5	4 (:1s)	–	R/W(S)	–	–	–	2

CPU Unit run status

*1:On the CX-Process Monitor, the R/W mode is indicated in the Tuning screen or in the Control screen.

ITEM TYPE	ITEM	Symbol	Data Description	Data Range	Default	COLD start initialization	R/W Mode R: Read, W: Write, R/W: R/W-enabled, -: R/W-disabled Note: r and r/w: Read and read/write for validate action or monitor run status by CX-Process Tool or Monitor, (S): Initial setting data, (O): Operation data				Data Length (bytes)
							According to CX-Process Tool	According to CX-Process Monitor *1	According to ITEM Setting block	According to Step Ladder Program	
Contact output	007		Fatal error 0: A fatal error has not occurred on the CPU Unit. 1: A fatal error has occurred on the CPU Unit. (Fatal error was detected by system self-diagnostics or the FALS command was executed.)	0, 1	0	Yes	r	R	–	R	1
	008		CPU Unit running 0: CPU Unit has stopped. (PROGRAM mode or fatal error) 1: CPU Unit is running. (RUN mode or MONITOR mode)	0, 1	0	Yes	r	R	–	R	1
	009		Output OFF 0: CPU Unit output is not OFF. 1: CPU Unit output is OFF. (Auxiliary Area A50015 ON)	0, 1	0	Yes	r	R	–	R	1
	010		RUN mode 0: CPU Unit not in RUN mode 1: CPU Unit in RUN mode	0, 1	0	Yes	r	R	–	R	1
	011		MONITOR mode 0: CPU Unit not in MONITOR mode 1: CPU Unit in MONITOR mode	0, 1	0	Yes	r	R	–	R	1
	013		PROGRAM mode 0: CPU Unit not in PROGRAM mode 1: CPU Unit in PROGRAM mode	0, 1	0	Yes	r	R	–	R	1

Loop Control Unit run/stop command and status

*1:On the CX-Process Monitor, the R/W mode is indicated in the Tuning screen or in the Control screen.

ITEM TYPE	ITEM	Symbol	Data Description	Data Range	Default	COLD start initialization	R/W Mode R: Read, W: Write, R/W: R/W-enabled, -: R/W-disabled Note: r and r/w: Read and read/write for validate action or monitor run status by CX-Process Tool or Monitor, (S): Initial setting data, (O): Operation data				Data Length (bytes)
							According to CX-Process Tool	According to CX-Process Monitor *1	According to ITEM Setting block	According to Step Ladder Program	
Parameter	014		Run/stop command 0: Stop, 1: Hot start, 2: Cold start Note 1: Unit already running. Change to 1 or 2 invalid Note 2: Only setting of 0 (stop) can be performed in the ITEM Setting blocks. (For details, see “3-2 Description of Operation” in the User’s Manual.)	0 to 2	0	Yes	r/w	R/W	W (Note 2)	–	2
	015		Run/stop Status 1: Stop 0: Running	0, 1	0	Yes	r	R	–	R	2
	016		Hot start 1: Hot start in operation 0: Other	0, 1	0	Yes	r	R	–	R	2
	017		Cold start 1: Cold start in operation, 0: Other	0, 1	1	Yes	r	R	–	R	2
	018		START mode at power ON 1: Hot start, 2: Cold start Note: If pin2 of the DIP switch is ON, this setting will be ignored and the Unit will always use a cold start.	1, 2	1	–	R/W(S)	–	–	R	2
	019		Run Start flag 1: Running is started (hot or cold start) 0: 0 is set by the user. Note: The Run Start flag is latched to 1 when the Loop Control Unit starts running, and remains at 1 as long as the flag is not reset to 0. (This flag differs from constantly ON flags in that it can be set to 0 by the user.)	0, 1	1	Yes	r	–	–	W	1

Status output for sequence control

*1:On the CX-Process Monitor, the R/W mode is indicated in the Tuning screen or in the Control screen.

ITEM TYPE	ITEM	Symbol	Data Description	Data Range	Default	COLD start initialization	R/W Mode R: Read, W: Write, R/W: R/W-enabled, -: R/W-disabled Note: r and r/w: Read and read/write for validate action or monitor run status by CX-Process Tool or Monitor, (S): Initial setting data, (O): Operation data				Data Length (bytes)
							According to CX-Process Tool	According to CX-Process Monitor *1	According to ITEM Setting block	According to Step Ladder Program	
Contact output	020	U0	Output 0 0 is output at all times at power ON.	0	0	Yes	r	–	–	R	1
	021	U1	Output 1 1 is output at all times at power ON.	1	1	Yes	r	–	–	R	1
	022	U2	ON/OFF every 0.5 sec	0, 1	0	Yes	r	–	–	R	1
	023	U3	ON/OFF every 1 sec	0, 1	0	Yes	r	–	–	R	1
	024	U4	Differential output at 0 hr every day	0, 1	0	Yes	r	–	–	R	1
	025	U5	Differential output at every hour on the hour	0, 1	0	Yes	r	–	–	R	1
	026	U6	Differential output every 10 min	0, 1	0	Yes	r	–	–	R	1
	027	U7	Differential output every min	0, 1	0	Yes	r	–	–	R	1
	028	U8	Differential output every 10 sec	0, 1	0	Yes	r	–	–	R	1

Calendar and clock output

*1:On the CX-Process Monitor, the R/W mode is indicated in the Tuning screen or in the Control screen.

ITEM TYPE	ITEM	Symbol	Data Description	Data Range	Default	COLD start initialization	R/W Mode R: Read, W: Write, R/W: R/W-enabled, -: R/W-disabled Note: r and r/w: Read and read/write for validate action or monitor run status by CX-Process Tool or Monitor, (S): Initial setting data, (O): Operation data				Data Length (bytes)
							According to CX-Process Tool	According to CX-Process Monitor *1	According to ITEM Setting block	According to Step Ladder Program	
Parameter	031	Y1	Year	YYYY		Yes	–	–	–	–	2
	032	Y2	Year/month (year: lower 2 digits of year)	YYMM		Yes	–	–	–	–	2
	033	Y3	Year/day	MMDD		Yes	–	–	–	–	2
	034	Y4	Day/hours	DDhh		Yes	–	–	–	–	2
	035	Y5	Hour/minutes	hhmm		Yes	–	–	–	–	2
	036	Y6	Minutes/seconds	mmss		Yes	–	–	–	–	2

Note:This calendar data is based upon the calendar data of the CPU Unit.

Download indication for individual function blocks

*1:On the CX-Process Monitor, the R/W mode is indicated in the Tuning screen or in the Control screen.

ITEM TYPE	ITEM	Symbol	Data Description	Data Range	Default	COLD start initialization	R/W Mode R: Read, W: Write, R/W: R/W-enabled, -: R/W-disabled Note: r and r/w: Read and read/write for validate action or monitor run status by CX-Process Tool or Monitor, (S): Initial setting data, (O): Operation data				Data Length (bytes)
							According to CX-Process Tool	According to CX-Process Monitor *1	According to ITEM Setting block	According to Step Ladder Program	
Parameter	039*6	BT	Function Block Changed flag 1: Function blocks have been downloaded from the CX-Process Tool software in units of function blocks. 0: Function blocks have not been downloaded from the CX-Process Tool software in units of function blocks, or a hot or cold start was made after a download.	0, 1	0	Yes	–	–	–	–	1

*6: Supported only by Loop Control Unit version 2.50 or later.

System display and setting for Node Terminals

*1:On the CX-Process Monitor, the R/W mode is indicated in the Tuning screen or in the Control screen.

ITEM TYPE	ITEM	Symbol	Data Description	Data Range	Default	COLD start initialization	R/W Mode R: Read, W: Write, R/W: R/W-enabled, -: R/W-disabled Note: r and r/w: Read and read/write for validate action or monitor run status by CX-Process Tool or Monitor, (S): Initial setting data, (O): Operation data				Data Length (bytes)
							According to CX-Process Tool	According to CX-Process Monitor *1	According to ITEM Setting block	According to Step Ladder Program	
Parameter	041		Self unit address (automatically stored)	16 to 31	00	Yes	R	–	–	–	2
	042		LCU number 0: Basic, 1: Expansion 1, 2: Expansion 2	0 to 2	0	–	R/W(S)	–	–	–	2
	043		Start address of Data Memory (D) for the Node Terminals Note: The same address must be set to all LCU numbers on the same PLC.	0 to 32767 (words) Note: Corresponds to D00000 to D32767	16020 Note: Corres-ponds to D16020	–	R/W(S)	–	–	–	2

Operation indication

System common cycle (ITEM004) blocks

*1:On the CX-Process Monitor, the R/W mode is indicated in the Tuning screen or in the Control screen.

ITEM TYPE	ITEM	Symbol	Data Description	Data Range	Default	COLD start initialization	R/W Mode R: Read, W: Write, R/W: R/W-enabled, -: R/W-disabled Note: r and r/w: Read and read/write for validate action or monitor run status by CX-Process Tool or Monitor, (S): Initial setting data, (O): Operation data				Data Length (bytes)
							According to CX-Process Tool	According to CX-Process Monitor *1	According to ITEM Setting block	According to Step Ladder Program	
Parameter	051		Processing time load rate	% display		Yes	r	–	–	–	2
	052		Max. control load rate indication (reset by 0)	% display		Yes	r/w	–	–	–	2
	053		Operation Cycle Automatic Switching Generator flag (1: Generated, reset by 0)	0, 1	0	Yes	r/w	–	–	–	2

0.1-second operation cycle blocks

*1:On the CX-Process Monitor, the R/W mode is indicated in the Tuning screen or in the Control screen.

ITEM TYPE	ITEM	Symbol	Data Description	Data Range	Default	COLD start initialization	R/W Mode R: Read, W: Write, R/W: R/W-enabled, -: R/W-disabled Note: r and r/w: Read and read/write for validate action or monitor run status by CX-Process Tool or Monitor, (S): Initial setting data, (O): Operation data				Data Length (bytes)
							According to CX-Process Tool	According to CX-Process Monitor *1	According to ITEM Setting block	According to Step Ladder Program	
Parameter	054		Processing time load rate	% display		–	r	–	–	–	2
	055		Max. control load rate indication (reset by 0)	% display		–	r/w	–	–	–	2
	056		Operation Cycle Automatic Switching Generator flag (1: Generated, reset by 0)	0, 1	0	–	r/w	–	–	–	2

0.2-second operation cycle blocks

*1:On the CX-Process Monitor, the R/W mode is indicated in the Tuning screen or in the Control screen.

ITEM TYPE	ITEM	Symbol	Data Description	Data Range	Default	COLD start initialization	R/W Mode R: Read, W: Write, R/W: R/W-enabled, -: R/W-disabled Note: r and r/w: Read and read/write for validate action or monitor run status by CX-Process Tool or Monitor, (S): Initial setting data, (O): Operation data				Data Length (bytes)
							According to CX-Process Tool	According to CX-Process Monitor *1	According to ITEM Setting block	According to Step Ladder Program	
Parameter	057		Processing time load rate	% display		–	r	–	–	–	2
	058		Max. control load rate indication (reset by 0)	% display		–	r/w	–	–	–	2
	059		Operation Cycle Automatic Switching Generator flag (1: Generated, reset by 0)	0, 1	0	–	r/w	–	–	–	2

0.5-second operation cycle blocks

*1:On the CX-Process Monitor, the R/W mode is indicated in the Tuning screen or in the Control screen.

ITEM TYPE	ITEM	Symbol	Data Description	Data Range	Default	COLD start initialization	R/W Mode R: Read, W: Write, R/W: R/W-enabled, -: R/W-disabled Note: r and r/w: Read and read/write for validate action or monitor run status by CX-Process Tool or Monitor, (S): Initial setting data, (O): Operation data				Data Length (bytes)
							According to CX-Process Tool	According to CX-Process Monitor *1	According to ITEM Setting block	According to Step Ladder Program	
Parameter	060		Processing time load rate	% display		–	r	–	–	–	2
	061		Max. control load rate indication (reset by 0)	% display		–	r/w	–	–	–	2
	062		Operation Cycle Automatic Switching Generator flag (1: Generated, reset by 0)	0, 1	0	–	r/w	–	–	–	2

1-second operation cycle blocks

*1:On the CX-Process Monitor, the R/W mode is indicated in the Tuning screen or in the Control screen.

ITEM TYPE	ITEM	Symbol	Data Description	Data Range	Default	COLD start initialization	R/W Mode R: Read, W: Write, R/W: R/W-enabled, -: R/W-disabled Note: r and r/w: Read and read/write for validate action or monitor run status by CX-Process Tool or Monitor, (S): Initial setting data, (O): Operation data				Data Length (bytes)
							According to CX-Process Tool	According to CX-Process Monitor *1	According to ITEM Setting block	According to Step Ladder Program	
Parameter	063		Processing time load rate	% display		–	r	–	–	–	2
	064		Max. control load rate indication (reset by 0)	% display		–	r/w	–	–	–	2
	065		Operation Cycle Automatic Switching Generator flag (1: Generated, reset by 0)	0, 1	0	–	r/w	–	–	–	2

2-second operation cycle blocks

*1:On the CX-Process Monitor, the R/W mode is indicated in the Tuning screen or in the Control screen.

ITEM TYPE	ITEM	Symbol	Data Description	Data Range	Default	COLD start initialization	R/W Mode R: Read, W: Write, R/W: R/W-enabled, -: R/W-disabled Note: r and r/w: Read and read/write for validate action or monitor run status by CX-Process Tool or Monitor, (S): Initial setting data, (O): Operation data				Data Length (bytes)
							According to CX-Process Tool	According to CX-Process Monitor *1	According to ITEM Setting block	According to Step Ladder Program	
Parameter	066		Processing time load rate	% display		–	r	–	–	–	2
	067		Max. control load rate indication (reset by 0)	% display		–	r/w	–	–	–	2
	068		Operation Cycle Automatic Switching Generator flag (1: Generated, reset by 0)	0, 1	0	–	r/w	–	–	–	2

Error indication

*1:On the CX-Process Monitor, the R/W mode is indicated in the Tuning screen or in the Control screen.

ITEM TYPE	ITEM	Symbol	Data Description	Data Range	Default	COLD start initialization	R/W Mode R: Read, W: Write, R/W: R/W-enabled, -: R/W-disabled Note: r and r/w: Read and read/write for validate action or monitor run status by CX-Process Tool or Monitor, (S): Initial setting data, (O): Operation data				Data Length (bytes)
							According to CX-Process Tool	According to CX-Process Monitor *1	According to ITEM Setting block	According to Step Ladder Program	
Parameter	091		Smallest block address where PV error input is ON*2 (000: Normal)	000 to 032	000	Yes	r	R	–	–	2
	092		Smallest block address where MV error input is ON*3 (000: Normal)	000 to 032	000	Yes	r	R	–	–	2
	093		Smallest block address where execution error (other than error code 0) occurs ON*4	000 to	000	Yes	r	R	–	–	2
	094		Smallest block address where function block database error occurs ON*5	000 to	000	Yes	r	R	–	–	2
	095		Battery error (1: Error, 0: Normal)	0, 1	0	Yes	r	R	–	–	2

*2: Specify this when PV error contact input is ON (set source designation at ITEM018 and error indication at ITEM019) in the Basic PID or Advanced PID blocks.

*3: Specify this when MV error contact input is ON (set source designation at ITEM090 and error indication at ITEM091) in the Basic PID or Advanced PID blocks.

*4: The smallest block number of the function block where the error occurred is stored when the error code to be stored to ITEM003 of each function block is other than 0 (normal).
For details on error codes, see Appendix "Execution Error Code List."

*5: The function blocks in which the database error is occurring are cyclically checked, and the block address is overwritten and displayed each time that an error is detected. FFFF indicates that the database error is occurring on all function blocks.

Memory processing

*1:On the CX-Process Monitor, the R/W mode is indicated in the Tuning screen or in the Control screen.

ITEM TYPE	ITEM	Symbol	Data Description	Data Range	Default	COLD start initialization	R/W Mode R: Read, W: Write, R/W: R/W-enabled, -: R/W-disabled Note: r and r/w: Read and read/write for validate action or monitor run status by CX-Process Tool or Monitor, (S): Initial setting data, (O): Operation data				Data Length (bytes)
							According to CX-Process Tool	According to CX-Process Monitor *1	According to ITEM Setting block	According to Step Ladder Program	
Parameter	099		MPU/FROM version display (V*. **V*. **)			Yes	r	–	–	–	16
	100*5		All clear			Yes	w	–	–	–	2
	101*5		Backup start command (RAM to flash memory) Note: The Unit will be in a stopped state after data has been backed up. Either execute a cold or hot start from the CX-Process Tool or turn the power supply OFF and ON.	0, 1	0	Yes	r/w	R/W	–	–	2
	102*5		Recovery start command (flash memory to RAM) Note: The Unit will be in a stopped state after data has been restored. Either execute a cold or hot start from the CX-Process Tool or turn the power supply OFF and ON.	0, 1	0	Yes	r/w	R/W	–	–	2
	103*5		Backup error display 1: Error, 0: Normal	0, 1	0	Yes	r	R	–	–	2
	104*5		Flash memory write count display	0 to 32767	0	–	r	R	–	–	2
	110*6		CX-Process Tool software version (Indicates the version of the CX-Process Tool used to create the function block data. For example, "250" is given for version 2.50.) Note: This value cannot be set by the user. It is set by the CX-Process Tool.	0 to 32767	0	–	R/W (S)	–	–	–	2

*5: Supported only by Loop Control Unit version 2.00 or later.
*6: Supported only by Loop Control Unit version 2.50 or later.

Note
- Before changing ITEM004 (system common operation cycle) of the System Common block (Block Model 000), be sure to stop running of the Loop Control Unit. Start running of the Loop Control Unit by a cold start after changing ITEM004. Otherwise, the Loop Control Unit will not run correctly.
- Be sure to set 0 to ITEM000 of the System Common block (Block Model 000). If this ITEM is set to 1, running of the Loop Control Unit stops, and data exchange with the CPU Unit stops.

Note The internal data on the CS1 CPU Unit and not the data on the Loop Control Unit is output as the calendar and clock output data of ITEM031 to ITEM036 of the System Common block (Block Model 000).

Block Model	Block Name	Block Address
<001>	2-position ON/OFF	001 to 032

Outline

This function block is a 2-position type ON/OFF controller.

•Remote/Local switching is possible.
•This function block is provided with four PV alarm outputs and a deviation alarm output.

•During reverse action

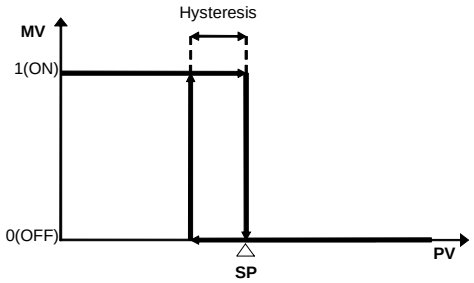

•During forward action

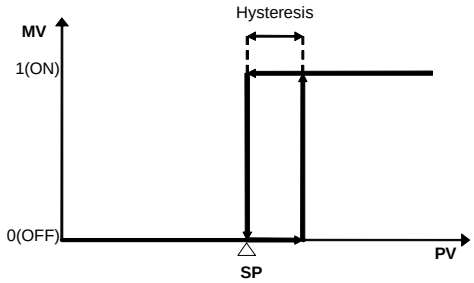

Block diagram

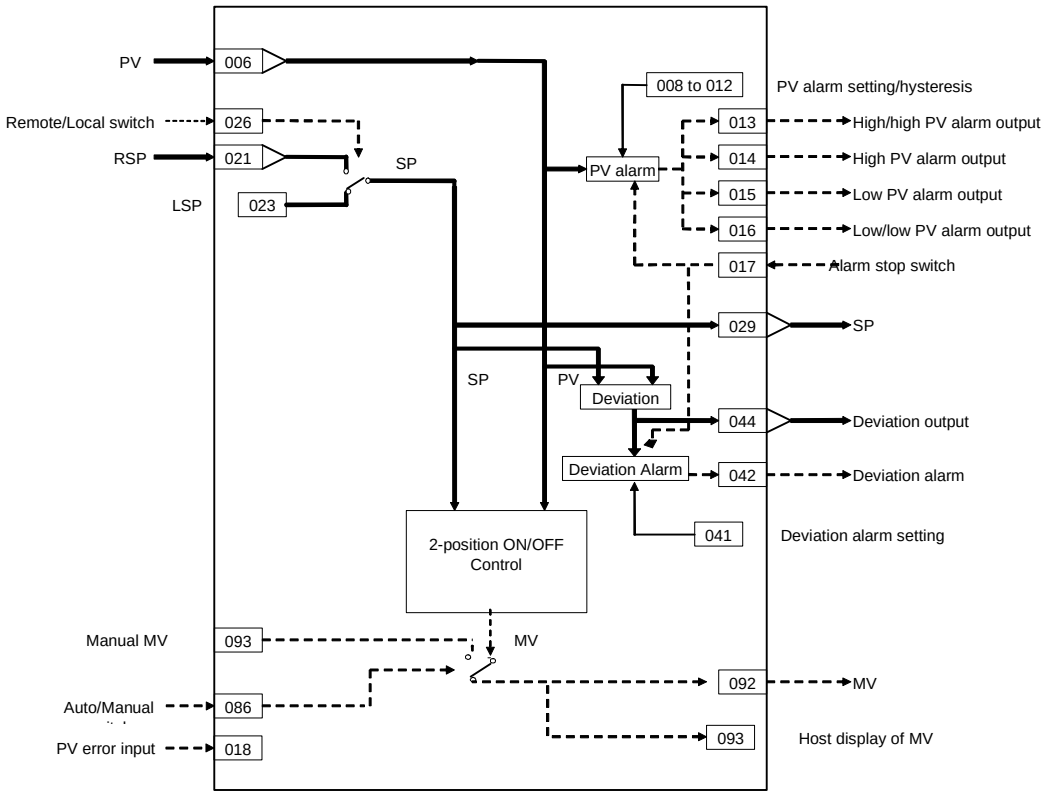

ITEM list

Note The values of ITEMs that cannot be set (indicated as either "-" or "r/w" in the above list) on CX-Process Tool such as the alarm stop switch that were active before the instantaneous power interruption or running of the Loop Control Unit was stopped are cleared when a cold start is performed. When a hot start is performed, these values are held. The internally held values for the standby states in standby sequences that were active before the instantaneous power interruption or running of the Loop Control Unit was stopped are also cleared. When a hot start is performed, these values are held.

Contact input

*1:On the CX-Process Monitor, the R/W mode is indicated in the Tuning screen or in the Control screen.

ITEM TYPE	ITEM	Symbol	Data Description	Data Range	Default	COLD start initialization	R/W Mode R: Read, W: Write, R/W: R/W-enabled, -: R/W-disabled Note: r and r/w: Read and read/write for validate action or monitor run status by CX-Process Tool or Monitor, (S): Initial setting data, (O): Operation data					Data Length (bytes)
							According to CX-Process Tool	According to CX-Process Monitor *1	According to ITEM Setting block	According to Step Ladder Program	Send/ Receive All Blocks	
Contact input	000		Stop block operation command (0: Cancel stop, 1: Stop)	0, 1	0	–	–	R/W	–	–	S/R	1
Parameter	001		Comment	23 characters	Block name	–	R/W(S)	–	–	–	–	24
	002		Block Model: 2-position ON/OFF	001	001	–	R/W(S)	–	–	–	–	2
Special	003		Execution error display 0: Normal, Other: Error (See Appendix “Execution Error Code List.”)		0000	–	r	–	–	–	S	2
Parameter	004		Operation cycle (s) 0: Common, 1: 0.1, 2: 0.2, 3: 0.5, 4: 1, 5: 2	0 to 5	0	–	R/W(S)	–	–	–	–	2

PV

*1:On the CX-Process Monitor, the R/W mode is indicated in the Tuning screen or in the Control screen.

ITEM TYPE	ITEM	Symbol	Data Description	Data Range	Default	COLD start initialization	R/W Mode R: Read, W: Write, R/W: R/W-enabled, -: R/W-disabled Note: r and r/w: Read and read/write for validate action or monitor run status by CX-Process Tool or Monitor, (S): Initial setting data, (O): Operation data					Data Length (bytes)
							According to CX-Process Tool	According to CX-Process Monitor *1	According to ITEM Setting block	According to Step Ladder Program	Send/ Receive All Blocks	
Analog input wiring information	006		PV source designation BBB: Block address, III: ITEM No.	BBBIII	000000	–	R/W(S)	–	–	–	–	4
Analog input	007	PV	PV input	-15.00 to +115.00%	0.00	Yes	–	R	–	–	S	2
Parameter	008		High/high alarm setting	-15.00 to +115.00%	115.00	–	R/W (O)	R/W	W	–	S/R	2
	009		High alarm setting	-15.00 to +115.00%	100.00	–	R/W (O)	R/W	W	–	S/R	2
	010		Low alarm setting	-15.00 to +115.00%	0.00	–	R/W (O)	R/W	W	–	S/R	2
	011		Low/low alarm setting	-15.00 to +115.00%	-115.00	–	R/W (O)	R/W	W	–	S/R	2
	012		Hysteresis setting	0 to 115.00%	1.00	–	R/W(S)	–	W	–	–	2
Contact output	013	HH	High/high alarm output	0, 1	0	Yes	–	R	–	R	S	1
	014	H	High alarm output	0, 1	0	Yes	–	R	–	R	S	1
	015	L	Low/low alarm output	0, 1	0	Yes	–	R	–	R	S	1
	016	LL	Low alarm output	0, 1	0	Yes	–	R	–	R	S	1
Contact input	017	S1	Alarm stop switch 0: Alarm, 1: Stop	0, 1	0	Yes	R/W (O)	R/W	–	R/W	S/R	1

*1:On the CX-Process Monitor, the R/W mode is indicated in the Tuning screen or in the Control screen.

ITEM TYPE	ITEM	Symbol	Data Description	Data Range	Default	COLD start initialization	R/W Mode R: Read, W: Write, R/W: R/W-enabled, -: R/W-disabled Note: r and r/w: Read and read/write for validate action or monitor run status by CX-Process Tool or Monitor, (S): Initial setting data, (O): Operation data					Data Length (bytes)
							According to CX-Process Tool	According to CX-Process Monitor *1	According to ITEM Setting block	According to Step Ladder Program	Send/ Receive All Blocks	
Connection terminal contact input	018		PV error contact source designation	BBBIII	000000	–	R/W(S)	–	–	–	–	4
Contact output	019	PVE	PV error indication 0: Normal, 1: Error → MANUAL mode	0, 1	0	Yes	–	–	–	R	S	1
Parameter	020		Alarm limit*2 0: No, 1: Yes Note: Limits the alarm set value to between 0.00% and 100.00%.	0, 1	0	–	R/W (S)	–	–	–	–	1

*2: If ITEM 020 (alarm limit) is set to 1 (ON), the alarm set range will be limited to between 0.00% and 100.00% as follows (supported by Loop Control Unit version 2.50 or later):

- If the high/high alarm setting (ITEM 008) or the high alarm set value (ITEM 009) is set to a value over 100.00%, the alarm output will not turn ON even if the PV exceeds the alarm set value.
- If the low/low alarm setting (ITEM 011) or the low alarm set value (ITEM 010) is set to a value below 0.00%, the alarm output will not turn ON even if the PV exceeds the alarm set value.
- If the deviation alarm setting (ITEM 041) is set to a value over 100.00%, the alarm output will not turn ON even if the PV exceeds the deviation range.

Setting Value Set Point

*1:On the CX-Process Monitor, the R/W mode is indicated in the Tuning screen or in the Control screen.

ITEM TYPE	ITEM	Symbol	Data Description	Data Range	Default	COLD start initialization	R/W Mode R: Read, W: Write, R/W: R/W-enabled, -: R/W-disabled Note: r and r/w: Read and read/write for validate action or monitor run status by CX-Process Tool or Monitor, (S): Initial setting data, (O): Operation data					Data Length (bytes)
							According to CX-Process Tool	According to CX-Process Monitor*1	According to ITEM Setting block	According to Step Ladder Program	Send/ Receive All Blocks	
Analog input wiring information	021		Remote Set Point source designation	BBBIII	000000	–	R/W(S)	–	–	–	–	4
Analog input	022	RSP	Remote Set Point input	-15.00 to +115.00%	0.00	Yes	–	R	–	–	–	2
Parameter	023		Local Set Point setting	-15.00 to +115.00%	0.00	–	R/W (O)	R/W	W	–	R	2
Parameter	024		Set Point setting mode (default) 0: Local only, 1: Remote/Local Note: Setting to 0 invalidates ITEM026.	0, 1	0	–	R/W(S)	R	–	–	S/R	1
Contact input/ parameter	026	R/L	Remote/Local switch 0: Local, 1: Remote Note: Valid only when ITEM024 is 1	0, 1	0	Yes	R/W (O)	R/W	–	R/W	S/R	1
Analog output	029	SP	Current Set Point output	-15.00 to +115.00%	0.00	Yes	r/w	R	–	–	S	2

Deviation

*1:On the CX-Process Monitor, the R/W mode is indicated in the Tuning screen or in the Control screen.

ITEM TYPE	ITEM	Symbol	Data Description	Data Range	Default	COLD start initialization	R/W Mode R: Read, W: Write, R/W: R/W-enabled, -: R/W-disabled Note: r and r/w: Read and read/write for validate action or monitor run status by CX-Process Tool or Monitor, (S): Initial setting data, (O): Operation data					Data Length (bytes)
							According to CX-Process Tool	According to CX-Process Monitor*1	According to ITEM Setting block	According to Step Ladder Program	Send/ Receive All Blocks	
Parameter	041		Deviation alarm setting (Hysteresis is set at ITEM012.)	0 to 115.00%	115.00	–	R/W (O)	R/W	W	–	S/R	2
Contact output	042	DA	Deviation alarm output	0, 1	0	Yes	–	R	–	R	S	1
Parameter	043		Deviation alarm standby sequence 0: Not used, 1: Used Note: Restart in standby sequence by cold start	0, 1	0	–	R/W(S)	–	–	–	–	1
Analog output	044	Y1	Deviation output (deviation = PV – SP)	±115.00%	0.00	Yes	r/w	–	–	–	–	2

Control

*1:On the CX-Process Monitor, the R/W mode is indicated in the Tuning screen or in the Control screen.

ITEM TYPE	ITEM	Symbol	Data Description	Data Range	Default	COLD start initialization	R/W Mode R: Read, W: Write, R/W: R/W-enabled, -: R/W-disabled Note: r and r/w: Read and read/write for validate action or monitor run status by CX-Process Tool or Monitor, (S): Initial setting data, (O): Operation data					Data Length (bytes)
							According to CX-Process Tool	According to CX-Process Monitor*1	According to ITEM Setting block	According to Step Ladder Program	Send/ Receive All Blocks	
Parameter	052		Control action 0: Reverse (MV=1 by PV < SP) 1: Direct (MV=1 by PV > SP)	0, 1	0	–	R/W(S)	–	–	–	–	1
	055		Control hysteresis setting	0 to 115.00%	1.00	–	R/W(S)	–	W	–	–	2
	062*3		MV Output Retrace Time for PV Error*2 0: Disabled	0 to 10	0	–	R/W(S)	–	–	–	–	2

*2: Based on the value specified in ITEM062, the MV will be restored to the output value at the times specified below when a PV error is detected.
If the operation cycle (ITEM004) is 1 s, the value specified in ITEM062 x 1 s
If the operation cycle is 2 s, the value specified in ITEM062 x 2 s

*3: These ITEMs were added in Loop Control Unit Ver. 2.00.

MV

*1:On the CX-Process Monitor, the R/W mode is indicated in the Tuning screen or in the Control screen.

ITEM TYPE	ITEM	Symbol	Data Description	Data Range	Default	COLD start initialization	R/W Mode R: Read, W: Write, R/W: R/W-enabled, -: R/W-disabled Note: r and r/w: Read and read/write for validate action or monitor run status by CX-Process Tool or Monitor, (S): Initial setting data, (O): Operation data					Data Length (bytes)
							According to CX-Process Tool	According to CX-Process Monitor*1	According to ITEM Setting block	According to Step Ladder Program	Send/ Receive All Blocks	
Contact input/ parameter	086	A/M	Auto/Manual switch 0: Manual, 1: Auto	0, 1	0	Yes	R/W (O)	R/W	–	R/W	S/R	1
Contact output	092	MV	Output	0, 1	0	Yes	–	R	–	R	–	1
Parameter	093		Host display of MV (Auto/Manual switch : Auto, Manual) or Manual MV (Auto/Manual switch : Manual)	0, 1	0	Yes	R/W (O)	R/W	–	R/W	S/R	1

Data for host display

*1:On the CX-Process Monitor, the R/W mode is indicated in the Tuning screen or in the Control screen.

ITEM TYPE	ITEM	Symbol	Data Description	Data Range	Default	COLD start initialization	R/W Mode R: Read, W: Write, R/W: R/W-enabled, -: R/W-disabled Note: r and r/w: Read and read/write for validate action or monitor run status by CX-Process Tool or Monitor, (S): Initial setting data, (O): Operation data					Data Length (bytes)
							According to CX-Process Tool	According to CX-Process Monitor*1	According to ITEM Setting block	According to Step Ladder Program	Send/ Receive All Blocks	
Parameter	099		Label	0 to 15	0	Yes	R/W(O)	R/W	W	–	S/R	2

Note To send data of the 2-position ON/OFF block to CX-Process Monitor by the Block Send Terminal to Computer blocks (Block Models 403 and 404), set the operation cycle of the Send to Computer blocks to the same or longer than that of the 2-position ON/OFF block at ITEM004. If the operation cycle of Send to Computer blocks is set to a shorter value, the Set Point momentarily becomes 0 when a cold start is performed.

List of tag ITEMs on CX-Process Monitor or SCADA software

The following tag ITEMs are used to specify ITEMs with either 1) Monitor tags when sending function blocks to the CX-Process Monitor from 1-Block/4-Block Send Terminal to Computer (Block Model 403/404) or 2) CSV tags from SCADA software when sending/receiving data to/from the CPU Unit using Receive All Blocks (Block Model 461)/Send All Blocks (Block Model 462). All tag ITEMs are fixed and cannot be changed.

ITEM	Data Name	CSV Tags in CX-Process Monitor	CSV Tags in SCADA Software
		Tag ITEM (fixed)	Tag ITEM (fixed)
000	Stop block operation command	MT_ST	MT_ST
003	Execution error display	None	ERR
007	PV input	PV	PV
008	High/high alarm setting	HH_SP	HH_SP
009	High alarm setting	H_SP	H_SP
010	Low alarm setting	L_SP	L_SP
011	Low/low alarm setting	LL_SP	LL_SP
013	High/high alarm output	HH	HH
014	High alarm output	H	H
015	Low alarm output	L	L
016	Low/low alarm output	LL	LL
017	Alarm stop switch	ALM_OFF	AOF
019	PV error indication	PV_ABN	PV_ABN
023	Local Set Point setting	None	SP
024	Set Point setting mode (default)	CAS_SET	CAS_SET
026	Remote/Local switch	R/L_SW	R/L_SW
029	Current Set Point output	SP	SP
041	Deviation alarm setting	DVA_SP	DVA_SP
042	Deviation alarm output	DVA	DVA
086	Auto/Manual switch	A/M_SW	A/M_SW
093	Host display of MV (Auto/Manual switch : Auto, Manual) or Manual operation value (Auto/Manual switch : Manual)	MV	MV
099	Label	OP_MK	OP_MK

Block Model	Block Name	Block Address
<002>	3-position ON/OFF	001 to 032

Outline

This function block is a 3-position type ON/OFF controller for heating/cooling ON/OFF control.

•Two outputs are provided for heating and cooling.
•Dead band and hysteresis can be set.
•Remote/Local switching is possible.

3-position ON/OFF action

MVH output turns ON during MV rise by "Set Point + dead band ÷ 2 + MVH side hysteresis, " and turns OFF during MV fall by "Set Point + dead band ÷ 2".
MVL output turns ON during MV fall by "Set Point - dead band ÷ 2 - MVH side hysteresis, " and turns OFF during MV rise by "Set Point - dead band ÷ 2".

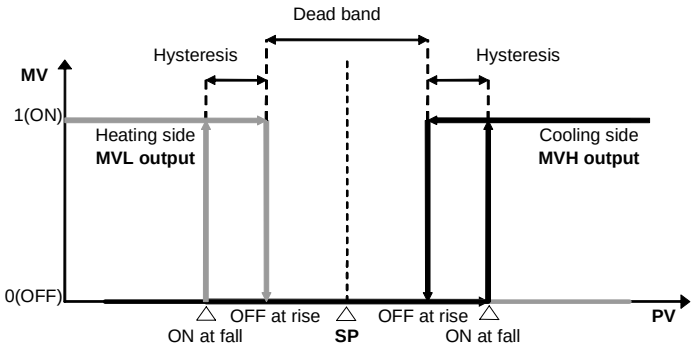

Note: To reverse action, use the Step Ladder Program block (Block Model 301) to invert output.

Block diagram

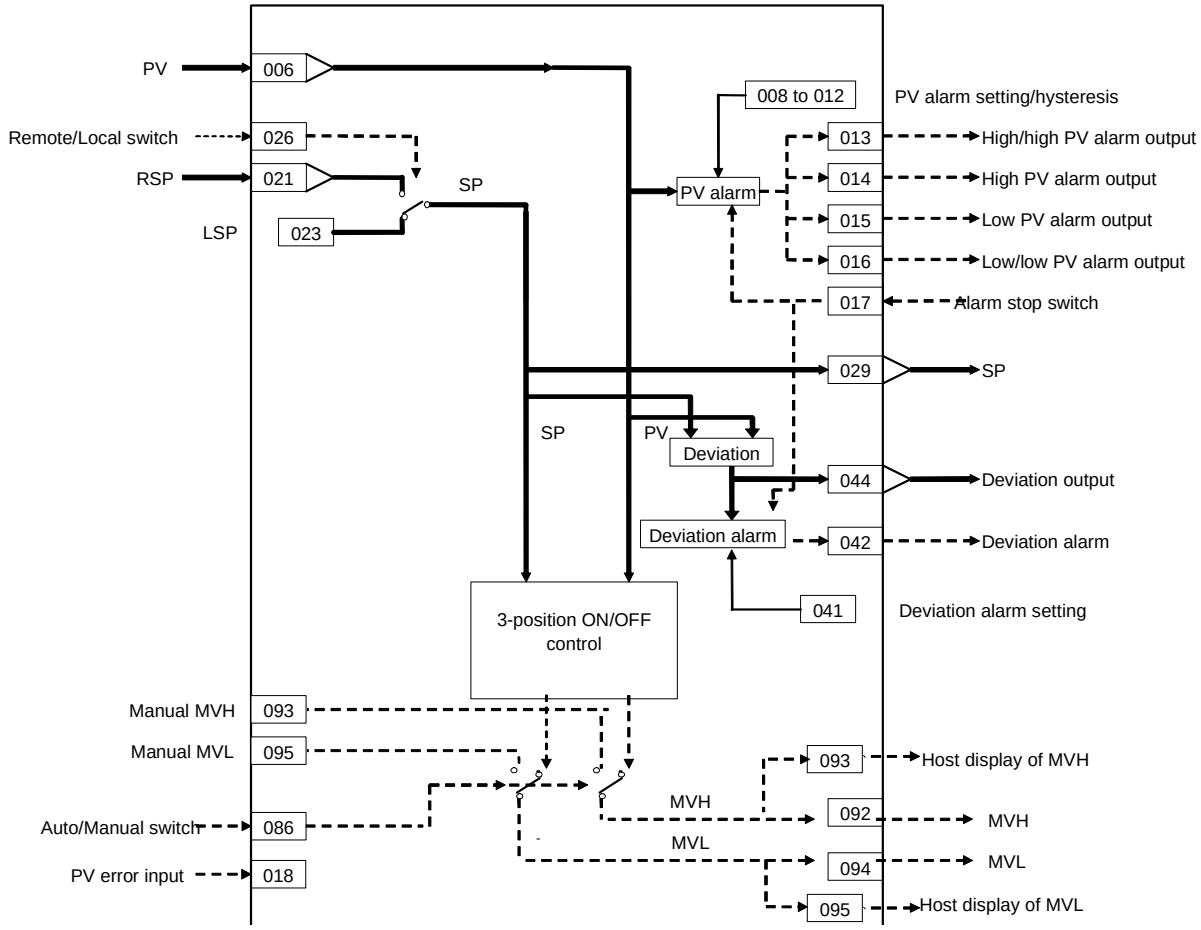

ITEM list

Note: The values of ITEMs that cannot be set (indicated as either "-" or "r/w" in the above list) on CX-Process Tool such as the alarm stop switch that were active before the instantaneous power interruption or running of the Loop Control Unit was stopped are cleared when a cold start is performed. When a hot start is performed, these values are held. The internally held values for the standby states in standby sequences that were active before the instantaneous power interruption or running of the Loop Control Unit was stopped are also cleared. When a hot start is performed, these values are held.

*1:On the CX-Process Monitor, the R/W mode is indicated in the Tuning screen or in the Control screen.

ITEM TYPE	ITEM	Symbol	Data Description	Data Range	Default	COLD start initialization	R/W Mode R: Read, W: Write, R/W: R/W-enabled, -: R/W-disabled Note: r and r/w: Read and read/write for validate action or monitor run status by CX-Process Tool or Monitor, (S): Initial setting data, (O): Operation data					Data Length (bytes)
							According to CX-Process Tool	According to CX-Process Monitor *1	According to ITEM Setting block	According to Step Ladder Program	Send/ Receive All Blocks	
Contact input	000		Stop block operation command (0: Cancel stop, 1: Stop)	0, 1	0	–	–	R/W	–	–	S/R	1
Parameter	001		Comment	23 characters	Block name	–	R/W(S)	–	–	–	–	24
	002		Block Model: 3-position Control	002	002	–	R/W(S)	–	–	–	–	2
Special	003		Execution error display 0: Normal, Other: Error (See Appendix “Execution Error Code List.”)		0000	–	r	–	–	–	S	2
Parameter	004		Operation cycle (sec) 0: Common, 1: 0.1, 2: 0.2, 3: 0.5, 4: 1, 5: 2	0 to 5	0	–	R/W(S)	–	–	–	–	2

PV

*1:On the CX-Process Monitor, the R/W mode is indicated in the Tuning screen or in the Control screen.

ITEM TYPE	ITEM	Symbol	Data Description	Data Range	Default	COLD start initialization	R/W Mode R: Read, W: Write, R/W: R/W-enabled, -: R/W-disabled Note: r and r/w: Read and read/write for validate action or monitor run status by CX-Process Tool or Monitor, (S): Initial setting data, (O): Operation data					Data Length (bytes)
							According to CX-Process Tool	According to CX-Process Monitor *1	According to ITEM Setting block	According to Step Ladder Program	Send/ Receive All Blocks	
Analog input wiring information	006		PV source designation BBB: Block address, III: ITEM No.	BBBIII	000000	–	R/W(S)	–	–	–	–	4
Analog input	007	PV	PV input	-15.00 to +115.00%	0.00	Yes	–	R	–	–	S	2
Parameter	008		High/high alarm setting	-15.00 to +115.00%	115.00	–	R/W (O)	R/W	W	–	S/R	2
	009		High alarm setting	-15.00 to +115.00%	100.00	–	R/W (O)	R/W	W	–	S/R	2
	010		Low/low alarm setting	-15.00 to +115.00%	0.00	–	R/W (O)	R/W	W	–	S/R	2
	011		Low/low alarm setting	-15.00 to +115.00%	-115.00	–	R/W (O)	R/W	W	–	S/R	2
	012		Hysteresis setting	0 to 115.00%	1.00	–	R/W(S)	–	W	–	–	2
Contact output	013	HH	High/high alarm output	0, 1	0	Yes	–	R	–	R	S	1
	014	H	High alarm output	0, 1	0	Yes	–	R	–	R	S	1
	015	L	Low alarm output	0, 1	0	Yes	–	R	–	R	S	1
	016	LL	Low/low alarm output	0, 1	0	Yes	–	R	–	R	S	1
Contact input	017	S1	Alarm stop switch 0: Alarm, 1: Stop	0, 1	0	–	R/W (O)	R/W	–	R/W	S/R	1
Connection terminal contact input	018		PV error contact source designation	BBBIII	000000	–	R/W(S)	–	–	–	–	4
Contact output	019	PVE	PV error indication 0: Normal, 1: Error → MANUAL mode	0, 1	0	Yes	–	–	–	R	S	1
Parameter	020		Alarm limit*2 0: No, 1: Yes Note: Limits the alarm set value to between 0.00% and 100.00%.	0, 1	0	–	R/W (S)	–	–	–	–	1

*2: If ITEM 020 (alarm limit) it set to 1 (ON), the alarm set range will be limited to between 0.00% and 100.00% as follows (supported by Loop Control Unit version 2.50 or later):

- If the high/high alarm setting (ITEM 008) or the high alarm set value (ITEM 009) is set to a value over 100.00%, the alarm output will not turn ON even if the PV exceeds the alarm set value.
- If the low/low alarm setting (ITEM 011) or the low alarm set value (ITEM 010) is set to a value below 0.00%, the alarm output will not turn ON even if the PV exceeds the alarm set value.
- If the deviation alarm setting (ITEM 041) is set to a value over 100.00%, the alarm output will not turn ON even if the PV exceeds the deviation range.

Setting Value Set Point

*1:On the CX-Process Monitor, the R/W mode is indicated in the Tuning screen or in the Control screen.

ITEM TYPE	ITEM	Symbol	Data Description	Data Range	Default	COLD start initialization	R/W Mode R: Read, W: Write, R/W: R/W-enabled, -: R/W-disabled Note: r and r/w: Read and read/write for validate action or monitor run status by CX-Process Tool or Monitor, (S): Initial setting data, (O): Operation data					Data Length (bytes)
							According to CX-Process Tool	According to CX-Process Monitor *1	According to ITEM Setting block	According to Step Ladder Program	Send/ Receive All Blocks	
Analog input wiring information	021		Remote Set Point source designation	BBBIII	000000	–	R/W(S)	–	–	–	–	4
Analog input	022	RSP	Remote Set Point input	-15.00 to +115.00%	0.00	Yes	–	R	–	–	–	2
Parameter	023		Local Set Point setting	-15.00 to +115.00%	0.00	–	R/W (O)	R/W	W	–	R	2
	024		Set Point setting mode (default) 0: Local only, 1: Remote/Local Note: Setting to 0 invalidates ITEM026.	0, 1	0	–	R/W(S)	R	–	–	S/R	1
Contact input/ parameter	026	R/L	Remote/Local switch 0: Local, 1: Remote Note: Valid only when ITEM024 is 1	0, 1	0	Yes	R/W (O)	R/W	–	R/W	S/R	1
Analog output	029	SP	Current Set Point output	-15.00 to +115.00%	0.00	Yes	r/w	R	–	–	S	2

Deviation

*1:On the CX-Process Monitor, the R/W mode is indicated in the Tuning screen or in the Control screen.

ITEM TYPE	ITEM	Symbol	Data Description	Data Range	Default	COLD start initialization	R/W Mode R: Read, W: Write, R/W: R/W-enabled, -: R/W-disabled Note: r and r/w: Read and read/write for validate action or monitor run status by CX-Process Tool or Monitor, (S): Initial setting data, (O): Operation data					Data Length (bytes)
							According to CX-Process Tool	According to CX-Process Monitor *1	According to ITEM Setting block	According to Step Ladder Program	Send/ Receive All Blocks	
Parameter	041		Deviation alarm setting (hysteresis is set in ITEM012)	0 to 115.00%	115.00	–	R/W (O)	R/W	W	–	S/R	2
Contact output	042	DA	Deviation alarm output	0, 1	0	Yes	–	R	–	R	S	1
Parameter	043		Deviation alarm standby sequence 0: Not used, 1: Used Note: Restart in standby sequence by cold start	0, 1	1	–	R/W(S)	–	–	–	–	1
Analog output	044	Y1	Deviation output (deviation = PV – SP)	±115.00%	0.00	Yes	r/w	–	–	–	–	2

Control

*1:On the CX-Process Monitor, the R/W mode is indicated in the Tuning screen or in the Control screen.

ITEM TYPE	ITEM	Symbol	Data Description	Data Range	Default	COLD start initialization	R/W Mode R: Read, W: Write, R/W: R/W-enabled, -: R/W-disabled Note: r and r/w: Read and read/write for validate action or monitor run status by CX-Process Tool or Monitor, (S): Initial setting data, (O): Operation data					Data Length (bytes)
							According to CX-Process Tool	According to CX-Process Monitor *1	According to ITEM Setting block	According to Step Ladder Program	Send/ Receive All Blocks	
Parameter	054		Deadband setting	0 to 115.00%	1.00	–	R/W(O)	–	W	–	–	2
	055		Control hysteresis setting (MVH)	0 to 115.00%	1.00	–	R/W(S)	–	W	–	–	2
	056		Control hysteresis setting (MVL)	0 to 115.00%	1.00	–	R/W(S)	–	W	–	–	2
	062*4		MV Output Retrace Time for PV Error*3 0: Disabled	0 to 10	0	–	R/W(S)	–	–	–	–	2

*3: Based on the value specified in ITEM062, the MV will be restored to the output value at the times specified below when a PV error is detected.
If the operation cycle (ITEM004) is 1 s, the value specified in ITEM062 x 1 s
If the operation cycle is 2 s, the value specified in ITEM062 x 2 s

*4: These ITEMs were added in Loop Control Unit Ver. 2.00.

MV

*1:On the CX-Process Monitor, the R/W mode is indicated in the Tuning screen or in the Control screen.

ITEM TYPE	ITEM	Symbol	Data Description	Data Range	Default	COLD start initialization	R/W Mode R: Read, W: Write, R/W: R/W-enabled, -: R/W-disabled Note: r and r/w: Read and read/write for validate action or monitor run status by CX-Process Tool or Monitor, (S): Initial setting data, (O): Operation data					Data Length (bytes)
							According to CX-Process Tool	According to CX-Process Monitor *1	According to ITEM Setting block	According to Step Ladder Program	Send/ Receive All Blocks	
Contact input/ parameter	086	A/M	Auto/Manual switch 0: Manual, 1: Auto	0, 1	0	Yes	R/W(O)	R/W	–	R/W	S/R	1
Contact output	092	MVH	MVH output	0, 1	0	Yes	–	R	–	R	–	1
Parameter	093		Host display of MVH (Auto/Manual switch : Auto, Manual) or Manual MVH (Auto/Manual switch : Manual)	0, 1	0	Yes	R/W(O)	R/W	W	R/W	S/R	1
Contact output	094	MVL	MVL output	0, 1	0	Yes	–	R	–	R	–	1
Parameter	095		Host display of MVL(Auto/Manual switch : Auto, Manual) or Manual MVL (Auto/Manual switch : Manual)	0, 1	0	Yes	R/W(O)	R/W	W	R/W	S/R	1

Data for host display

*1:On the CX-Process Monitor, the R/W mode is indicated in the Tuning screen or in the Control screen.

ITEM TYPE	ITEM	Symbol	Data Description	Data Range	Default	COLD start initialization	R/W Mode R: Read, W: Write, R/W: R/W-enabled, -: R/W-disabled Note: r and r/w: Read and read/write for validate action or monitor run status by CX-Process Tool or Monitor, (S): Initial setting data, (O): Operation data					Data Length (bytes)
							According to CX-Process Tool	According to CX-Process Monitor *1	According to ITEM Setting block	According to Step Ladder Program	Send/ Receive All Blocks	
Parameter	099		Label	0 to 15	0	Yes	R/W(O)	R/W	W	–	S/R	2

Note To send data of the 3-position ON/OFF block to CX-Process Monitor by the Block Send Terminal to Computer blocks (Block Models 403 and 404), set the operation cycle of the Send to Computer blocks to the same or longer than that of the 3-position ON/OFF block at ITEM004. If the operation cycle of Send to Computer blocks is set to a shorter value, the Set Point momentarily becomes 0 when a cold start is performed.

List of tag ITEMs on CX-Process Monitor or SCADA software

The following tag ITEMs are used to specify ITEMs with either 1) Monitor tags when sending function blocks to the CX-Process Monitor from 1-Block/4-Block Send Terminal to Computer (Block Model 403/404) or 2) CSV tags from SCADA software when sending/receiving data to/from the CPU Unit using Receive All Blocks (Block Model 461)/Send All Blocks (Block Model 462). All tag ITEMs are fixed and cannot be changed.

ITEM	Data Name	CSV Tags in CX-Process Monitor	CSV Tags in SCADA Software
		Tag ITEM (fixed)	Tag ITEM (fixed)
000	Stop block operation command	MT_ST	MT_ST
003	Execution error display	None	ERR
007	PV input	PV	PV
008	High/high alarm setting	HH_SP	HH_SP
009	High alarm setting	H_SP	H_SP
010	Low alarm setting	L_SP	L_SP
011	Low/low alarm setting	LL_SP	LL_SP
013	High/high alarm output	HH	HH
014	High alarm output	H	H
015	Low alarm output	L	L
016	Low/low alarm output	LL	LL
017	Alarm stop switch	ALM_OFF	AOF
019	PV error indication	PV_ABN	PV_ABN
023	Local Set Point setting	None	SP
024	Set Point setting mode (default)	CAS_SET	CAS_SET
026	Remote/Local switch	R/L_SW	R/L_SW
029	Current Set Point output	SP	SP
041	Deviation alarm setting	DVA_SP	DVA_SP
042	Deviation alarm output	DVA	DVA
086	Auto/Manual switch	A/M_SW	A/M_SW
093	Host display of MVH(Auto/Manual switch : Auto, Manual) or MVH manual operation value (Auto/Manual switch : Manual)	MVH	MVH
095	Host display of MVL(Auto/Manual switch : Auto, Manual) or MVL manual operation value (Auto/Manual switch : Manual)	MVL	MVL
099	Label	OP_MK	OP_MK

Block Model	Block Name	Block Address
<011>	Basic PID	001 to 032

Outline

This function block is a controller whose PID functions have been narrowed down to the basic functions for fixed value control and cascade control.

- This function block is provided with four PV alarm outputs and a deviation alarm output, allowing standby sequences.
- Bumpless output of MV at switching from the Remote to the Local mode is possible.
- The Set Point can be made to track PV when the Manual mode is switched to in fixed value control.
- Bumpless output of primary side MV (without tracking) can be performed when the MV is used on the secondary loop side in cascade control.
- Auto-tuning of PID constants can be executed according to the limit cycle mode. (For details, see "About the PID Constant AT (auto-tuning) Function" on page 39

Block diagram

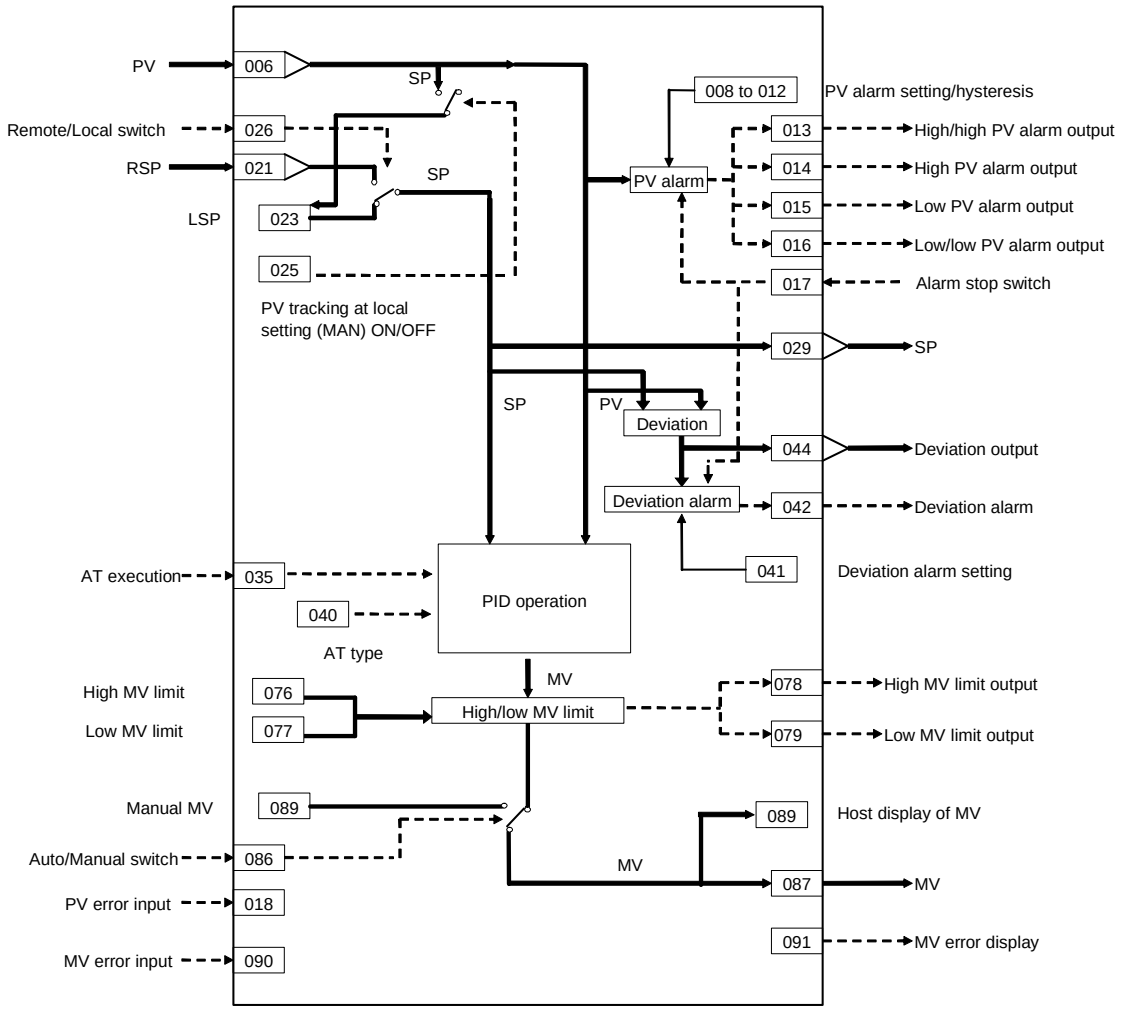

ITEM list

Note The values of ITEMs that cannot be set (indicated as either "-" or "r/w" in the above list) on CX-Process Tool such as the alarm stop switch that were active before the instantaneous power interruption or running of the Loop Control Unit was stopped are cleared when a cold start is performed. When a hot start is performed, these values are held. The internally held values for the standby states in standby sequences that were active before the instantaneous power interruption or running of the Loop Control Unit was stopped are also cleared. When a hot start is performed, these values are held.

*1:On the CX-Process Monitor, the R/W mode is indicated in the Tuning screen or in the Control screen.

ITEM TYPE	ITEM	Symbol	Data Description	Data Range	Default	COLD start initialization	R/W Mode R: Read, W: Write, R/W: R/W-enabled, -: R/W-disabled Note: r and r/w: Read and read/write for validate action or monitor run status by CX-Process Tool or Monitor, (S): Initial setting data, (O): Operation data					Data Length (bytes)
							According to CX-Process Tool	According to CX-Process Monitor *1	According to ITEM Setting block	According to Step Ladder Program	Send/ Receive All Blocks	
Contact input	000		Stop block operation command (0: Cancel stop, 1: Stop)	0, 1	0	–	–	R/W	–	–	S/R	1
Parameter	001		Comment	23 characters	Block name	–	R/W(S)	–	–	–	–	24
	002		Block Model: Basic PID	011	011	–	R/W(S)	–	–	–	–	2
Special	003		Execution error display 0: Normal, Other: Error (See Appendix “Execution Error Code List.”)		0000	–	r	–	–	–	S	2
Parameter	004		Operation cycle (sec) 0: Common, 1: 0.1, 2: 0.2, 3: 0.5, 4: 1, 5: 2	0 to 5	0	–	R/W(S)	–	–	–	–	2

PV

*1:On the CX-Process Monitor, the R/W mode is indicated in the Tuning screen or in the Control screen.

ITEM TYPE	ITEM	Symbol	Data Description	Data Range	Default	COLD start initialization	R/W Mode R: Read, W: Write, R/W: R/W-enabled, -: R/W-disabled Note: r and r/w: Read and read/write for validate action or monitor run status by CX-Process Tool or Monitor, (S): Initial setting data, (O): Operation data					Data Length (bytes)
							According to CX-Process Tool	According to CX-Process Monitor *1	According to ITEM Setting block	According to Step Ladder Program	Send/ Receive All Blocks	
Analog input wiring information	006		PV source designation BBB: Block address, III: ITEM No.	BBBIII	000000	000000	R/W(S)	–	–	–	–	4
Analog input	007	PV	PV input	-15.00 to +115.00%	0.00	0.00	–	R	–	–	S	2
Parameter	008		High/high alarm setting	-15.00 to +115.00%	115.00	115.00	R/W (O)	R/W	W	–	S/R	2
	009		High alarm setting	-15.00 to +115.00%	100.00	100.00	R/W (O)	R/W	W	–	S/R	2
	010		Low alarm setting	-15.00 to +115.00%	0.00	0.00	R/W (O)	R/W	W	–	S/R	2
	011		Low/low alarm setting	-15.00 to +115.00%	-15.00	-15.00	R/W (O)	R/W	W	–	S/R	2
	012		Hysteresis setting	0 to 115.00%	1.00	1.00	R/W(S)	–	W	–	–	2
Contact output	013	HH	High/high alarm output	0, 1	0	0	–	R	–	R	S	1
	014	H	High alarm output	0, 1	0	0	–	R	–	R	S	1
	015	L	Low alarm output	0, 1	0	0	–	R	–	R	S	1
	016	LL	Low/low alarm output	0, 1	0	0	–	R	–	R	S	1
Contact input	017	S1	Alarm stop switch 0: Alarm, 1: Stop	0, 1	0	0	R/W (O)	R/W	–	R/W	S/R	1
Connection terminal contact input	018		PV error contact source designation	BBBIII	000000	000000	R/W(S)	–	–	–	–	4
Contact output	019	PVE	PV execution error indication 0: Normal, 1: Error → MANUAL mode	0, 1	0	0	–	–	–	R	S	1
Parameter	020		Alarm limit *2 0: No, 1: Yes Note: Limits the alarm set value to between 0.00% and 100.00%.	0, 1	0	0	R/W (S)	–	–	–	–	1

*2: If ITEM 020 (alarm limit) it set to 1 (ON), the alarm set range will be limited to between 0.00% and 100.00% as follows (supported by Loop Control Unit version 2.50 or later):

- If the high/high alarm setting (ITEM 008) or the high alarm set value (ITEM 009) is set to a value over 100.00%, the alarm output will not turn ON even if the PV exceeds the alarm set value.
- If the low/low alarm setting (ITEM 011) or the low alarm set value (ITEM 010) is set to a value below 0.00%, the alarm output will not turn ON even if the PV exceeds the alarm set value.
- If the deviation alarm setting (ITEM 041) is set to a value over 100.00%, the alarm output will not turn ON even if the PV exceeds the deviation range.
- If the high MV limit (ITEM 076) is set to a value over 100.00%, the high MV limit output will not turn ON even if the high limit is reached. The high limit function, however, will work.
- If the low MV limit (ITEM 077) is set to a value below 0.00%, the low MV limit output will not turn ON even if the low limit is reached. The low limit function, however, will work.

Setting Value Set Point

*1:On the CX-Process Monitor, the R/W mode is indicated in the Tuning screen or in the Control screen.

ITEM TYPE	ITEM	Symbol	Data Description	Data Range	Default	COLD start initialization	R/W Mode R: Read, W: Write, R/W: R/W-enabled, -: R/W-disabled Note: r and r/w: Read and read/write for validate action or monitor run status by CX-Process Tool or Monitor, (S): Initial setting data, (O): Operation data					Data Length (bytes)
							According to CX-Process Tool	According to CX-Process Monitor *1	According to ITEM Setting block	According to Step Ladder Program	Send/ Receive All Blocks	
Analog input wiring information	021		Remote Set Point source designation	BBBIII	000000	–	R/W(S)	–	–	–	–	4
Analog input	022	RSP	Remote Set Point input	-15.00 to +115.00%	0.00	Yes	–	–	–	–	–	2
Parameter	023		Local Set Point setting	-15.00 to +115.00%	0.00	–	R/W (O)	W	W	–	R	2
	024		Set Point setting mode (default) 0: Local only, 1: Remote/Local Note: Setting to 0 invalidates ITEM026.	0, 1	0	–	R/W(S)	R	–	–	S/R	1
	025		PV tracking at local setting (Manual) 0: Not used, 1: Used	0, 1	0	–	R/W(S)	–	–	–	–	1
Contact input/ parameter	026	R/L	Remote/Local switch 0: Local, 1: Remote Note: Valid only when ITEM024 is 1	0, 1	0	Yes	R/W (O)	R/W	–	R/W	S/R	1
Analog output	029	SP	Current Set Point output	-15.00 to +115.00%	0.00	Yes	r/w	R	–	–	S	2
Parameter	032		Bumpless output between primary/secondary loops (self node is secondary side) 0: Not used, 1: Used	0, 1	0	–	R/W(S)	–	–	–	–	1

AT (auto-tuning)

*1:On the CX-Process Monitor, the R/W mode is indicated in the Tuning screen or in the Control screen.

ITEM TYPE	ITEM	Symbol	Data Description	Data Range	Default	COLD start initialization	R/W Mode R: Read, W: Write, R/W: R/W-enabled, -: R/W-disabled Note: r and r/w: Read and read/write for validate action or monitor run status by CX-Process Tool or Monitor, (S): Initial setting data, (O): Operation data					Data Length (bytes)
							According to CX-Process Tool	According to CX-Process Monitor *1	According to ITEM Setting block	According to Step Ladder Program	Send/ Receive All Blocks	
Parameter	035*2		AT command/AT Executing •0: Cancel AT, 1: Execute AT as AT command •AT Executing flag remains at 1 during AT execution. Flag returns to 0 automatically after AT execution ends normally.	0, 1	0	Yes	R/W(O)	R/W	W	R/W	S/R	1
	036*2		Limit cycle MV amplitude Note: Set as ±%.	5.00 to 50.00	20.00	–	R/W(O)	–	–	–	–	2
	037*2		Limit cycle hysteresis	0 to 10.00%	0.20	–	R/W(O)	–	–	–	–	2
	038*2		AT calculation gain	0.10 to 10.00	1.00	–	R/W(O)	–	–	–	–	2
	039*2		Judgment deviation for provisional AT execution	0 to 100.00%	10.00	–	R/W(O)	–	–	–	–	2
	040*2		AT type (0: Standard, 1: Short)	0, 1	0	–	R/W(O)	–	–	–	–	1

*2: These ITEMs were added in Loop Control Unit Ver.1.50.

Deviation

*1:On the CX-Process Monitor, the R/W mode is indicated in the Tuning screen or in the Control screen.

ITEM TYPE	ITEM	Symbol	Data Description	Data Range	Default	COLD start initialization	R/W Mode R: Read, W: Write, R/W: R/W-enabled, -: R/W-disabled Note: r and r/w: Read and read/write for validate action or monitor run status by CX-Process Tool or Monitor, (S): Initial setting data, (O): Operation data					Data Length (bytes)
							According to CX-Process Tool	According to CX-Process Monitor *1	According to ITEM Setting block	According to Step Ladder Program	Send/ Receive All Blocks	
Parameter	041		Deviation alarm setting (hysteresis is set in ITEM012)	0 to 115.00%	115.00	115.00	R/W(O)	R/W	W	–	S/R	2
Contact output	042	DA	Deviation alarm output	0, 1	0	0	–	R	–	R	S	1
Parameter	043		Deviation alarm standby sequence 0: Not used, 1: Used Note: Restart in standby sequence by cold start	0, 1	1	1	R/W(S)	–	–	–	–	1
Analog output	044	Y1	Deviation output (deviation = PV - SP)	±115.00%	0.00	0.00	r/w	–	–	–	S	2

Control

*1:On the CX-Process Monitor, the R/W mode is indicated in the Tuning screen or in the Control screen.

ITEM TYPE	ITEM	Symbol	Data Description	Data Range	Default	COLD start initialization	R/W Mode R: Read, W: Write, R/W: R/W-enabled, -: R/W-disabled Note: r and r/w: Read and read/write for validate action or monitor run status by CX-Process Tool or Monitor, (S): Initial setting data, (O): Operation data					Data Length (bytes)
							According to CX-Process Tool	According to CX-Process Monitor *1	According to ITEM Setting block	According to Step Ladder Program	Send/ Receive All Blocks	
Parameter	051		Processing cycle of PID control (0: cycle specified at ITEM004) Note: When operation cycle is set to value other than "0", the setting value of ITEM004 is automatically changed to "4".	(0), 1, 2, 4, 8, 16, 32, 64, 128s	0	–	R/W(S)	–	–	–	–	2
	052		Control action 0: Reverse (MV decreases by PV increase.), 1: Direct (MV increases by PV increase.)	0, 1	0	–	R/W(S)	–	–	–	–	1
	054	P	Proportional band	0.1 to 999.9%	100.0	–	R/W(O)	R/W	W	–	S/R	2
	055	I	Integral time (0: No integral action)	0 to 9999s	0	–	R/W(O)	R/W	W	–	S/R	2
	056	D	Differential time (0: No differential action)	0 to 9999s	0	–	R/W(O)	R/W	W	–	S/R	2
Contact input wiring information	061		Out-of-range processing at MV output destination block (BBB: Destination block address, III: ITEM No., 000000: Processing OFF) Note: When contact turns ON, accumulator in PID control is stopped.	BBBIII	000000	–	R/W(S)	–	–	–	–	4
Parameter	062*3		MV Output Retrace Time for PV Error*4 0: Disabled	0 to 10	0	–	R/W(S)	–	–	–	–	2
	065		PID with 2 degrees of freedom parameter α	0.00 to 1.00	0.65	–	R/W(S)	–	–	–	–	2
	066		PID with 2 degrees of freedom parameter β	0.00 to 1.00	1.00	–	R/W(S)	–	–	–	–	2

*3: These ITEMs were added in Loop Control Unit Ver. 2.00.

*4: Based on the value specified in ITEM062, the MV will be restored to the output value at the times specified below when a PV error is detected.
If the operation cycle (ITEM004) is 1 s, the value specified in ITEM062 x 1 s
If the operation cycle is 2 s, the value specified in ITEM062 x 2 s

MV

*1:On the CX-Process Monitor, the R/W mode is indicated in the Tuning screen or in the Control screen.

ITEM TYPE	ITEM	Symbol	Data Description	Data Range	Default	COLD start initialization	R/W Mode R: Read, W: Write, R/W: R/W-enabled, -: R/W-disabled Note: r and r/w: Read and read/write for validate action or monitor run status by CX-Process Tool or Monitor, (S): Initial setting data, (O): Operation data					Data Length (bytes)
							According to CX-Process Tool	According to CX-Process Monitor *1	According to ITEM Setting block	According to Step Ladder Program	Send/ Receive All Blocks	
Parameter	076	MH	High MV limit	±320.00%	105.00	–	R/W(O)	R/W	W	–	S/R	2
	077	ML	Low MV limit	±320.00%	-5.00	–	R/W(O)	R/W	W	–	S/R	2
Contact output	078*3	U1	High MV limit arrival output 1: High limit or higher Vaild for AUTO mode only; always 0 for Manual mode.	0, 1	0	Yes	–	R	–	R	S	1
	079*3	U2	Low MV limit arrival output 1: Low limit or lower Vaild for AUTO mode only; always 0 for Manual mode.	0, 1	0	Yes	–	R	–	R	S	1
Contact input/ parameter	086	A/M	Auto/Manual switch 0: Manual, 1: Auto	0, 1	0	Yes	R/W(O)	R/W	–	R/W	S/R	1
Analog output	087	MV	MV output	±320.00%	0.00	Yes	r/w	–	–	–	–	2
Parameter	088		Inversion of host display of MV 0: Not used, 1: Used Note: "Inversion" changes 0 to 100% range to 100 to 0%.	0, 1	0	–	R/W(S)	–	–	–	–	1
	089		Host display of MV (Auto/Manual switch : Auto, Manual) or Manual MV (Auto/Manual switch : Manual)	±320.00%	0.00	Yes	R/W(O)	R/W	W	–	S/R	2
Connection terminal contact input	090		MV error contact source designation	BBBIII	000000	–	R/W(S)	–	–	–	–	4
Contact output	091	MVE	MV error display 0: Normal, 1: Error	0, 1	0	Yes	–	–	–	R	S	1

*3: These ITEMs were added in Loop Control Unit Ver. 2.00.

Data for host display

*1:On the CX-Process Monitor, the R/W mode is indicated in the Tuning screen or in the Control screen.

ITEM TYPE	ITEM	Symbol	Data Description	Data Range	Default	COLD start initialization	R/W Mode R: Read, W: Write, R/W: R/W-enabled, -: R/W-disabled Note: r and r/w: Read and read/write for validate action or monitor run status by CX-Process Tool or Monitor, (S): Initial setting data, (O): Operation data					Data Length (bytes)
							According to CX-Process Tool	According to CX-Process Monitor *1	According to ITEM Setting block	According to Step Ladder Program	Send/ Receive All Blocks	
Parameter	098		MV index position	-15.00 to +115.00%	0.00	Yes	R/W(O)	R/W	W	–	S/R	2
	099		Label	0 to 15	0	Yes	R/W(O)	R/W	W	–	S/R	2

Note

- To send data of the Basic PID block to CX-Process Monitor by the Block Send Terminal to Computer blocks (Block Models 403 and 404), set the operation cycle of the Send to Computer blocks to the same or longer than that of the Basic PID block at ITEM004. If the operation cycle of Send to Computer blocks is set to a shorter value, the Set Point momentarily becomes 0 when a cold start is performed.
- Bumpless output of MV functions when PID constants are changed in the Basic PID block (Block Model 011).For this reason, MV is no longer updated and PID control is not executed correctly if variables are written to PID constants at each operation cycle by the Variable ITEM Setting block (Block Model 172).
  If this happens, use the Step Ladder Program block (Block Model 301) to provide a time interval for writing by the ITEM Setting block.

List of tag ITEMs on CX-Process Monitor or SCADA software

The following tag ITEMs are used to specify ITEMs with either 1) Monitor tags when sending function blocks to the CX-Process Monitor from 1-Block/4-Block Send Terminal to Computer (Block Model 403/404) or 2) CSV tags from SCADA software when sending/receiving data to/from the CPU Unit using Receive All Blocks (Block Model 461)/Send All Blocks (Block Model 462). All tag ITEMs are fixed and cannot be changed.

ITEM	Data Name	CSV Tags in CX-Process Monitor	CSV Tags in SCADA Software
		Tag ITEM (fixed)	Tag ITEM (fixed)
000	Stop block operation command	MT_ST	MT_ST
003	Execution error display	None	ERR
007	PV input	PV	PV
008	High/high alarm setting	HH_SP	HH_SP
009	High alarm setting	H_SP	H_SP
010	Low alarm setting	L_SP	L_SP
011	Low/low alarm setting	LL_SP	LL_SP
013	High/high alarm output	HH	HH
014	High alarm output	H	H
015	Low alarm output	L	L
016	Low/low alarm output	LL	LL
017	Alarm stop switch	ALM_OFF	AOF
019	PV error indication	PV_ABN	PV_ABN
023	Local Set Point setting	None	SP
024	Set Point setting mode (default)	CAS_SET	CAS_SET
026	Remote/Local switch	R/L_SW	R/L_SW
029	Current Set Point output	SP	SP
035	AT command/AT Executing	AT	AT
041	Deviation alarm setting	DVA_SP	DVA_SP
042	Deviation alarm output	DVA	DVA
044	Deviation output	None	DV
054	Proportional band	P	P
055	Integral time (0: No integral action)	I	I
056	Differential time (0: No differential action)	D	D
076	High MV limit	MH_LMT	MH_LMT
077	Low MV limit	ML_LMT	ML_LMT
078	High MV limit output	MLA	MLA
079	Low MV limit output	MLA	MLA
086	Auto/Manual switch	A/M_SW	A/M_SW
089	Host display of MV (Auto/Manual switch : Auto, Manual) or Manual MV (Auto/Manual switch : Manual)	MV	MV
091	MV error indication	MV_ABN	MV_ABN
098	MV index position	MV_IDX	MV_IDX
099	Label	OP_MK	OP_MK

Description of functions

Item		Description
PV (Process Variable) Input	Number of points	1
	Input range	-15.00 to +115.00%
	Operation function	None (Calculation of square root, first-order lag, bias, etc. Is required by external blocks)
	Sampling cycle	According to the specified operation cycle of this block (one of 0.1, 0.2, 0.5, 1, 2 seconds or 1 to 128 seconds) Note, however, that the external input refresh cycle of the entire instrumentation system differs from this operation cycle. (See 3-2 Description of Operation in the User's Manual.)
	PV error input	When the PV error contact turns ON, the Loop Control Unit is forced to enter the Manual mode, and the MV value active at that moment is held. At the same time, the PV error is transferred to the CX-Process Monitor. The disconnected line detection output ITEM of analog input (AI) function blocks is specified as the source designation for use. This enables forced switching to the Manual mode when a disconnected line is detected on the Analog Input Unit, and transfer of the PV error to CX-Process Monitor at the same time.
	PV compensation	None
SP (Set Point)	Number of points	1
	Setting range	-15 to +115.00%
	Remote/Local switching	Possible
	Bumpless output of MV when Local Set Point changes	The Local Set Point is made to match the Remote Set Point value to ensure bumpless (without sudden changes) switching of MV when the Remote Set Point is switched to the Local Set Point.
	SP rate-of-change limit	None
	PV tracking at manual setting of the Local Set Point	The Local Set Point can be made to track PV when the mode is switched to the Manual mode. When the mode is returned to the Auto mode, control is started with PV equaling the Set Point. Sudden changes in the MV caused at switching back to the Auto mode do not occur.
	Bumpless processing between primary/secondary loops	When the self node is performing cascade control as the secondary controller, processing is performed on the MV of the primary controller to be input as follows: • When the Set Point of the self node is Local (LSP): The primary controller is switched to the Manual mode, and the Local Set Point of the self node is overwritten on the MV of the primary controller. • When the Set Point of the self node is Remote (RSP): The primary controller is switched to the Auto mode, and the MV of the primary controller is input as the Remote Set Point as per normal.
PID Control	Control method	Advanced PID Various PID methods (proportional priority type, PV differential priority type, deviation differential type, etc.) can be selected according to the settings of parameters α and β.)
	Control action	Direct/reverse switchable
	PID constant	1 set AT (auto-tuning) can be automatically set according to limit cycle mode. (For details, see page 39 "About PID Constant AT Functions.")
	Propor-tion al band	0.1 to 999.9% (0.1% increments)
	Integral time	0 to 9999 sec. (1 second increments) 0: No accumulator Stepping of accumulation can be indicated from external contacts.
	Differential time	0 to 9999 sec. (1 second increments) 0: No differentiation
	Manual reset	None

Item		Description
MV (Manipula-ted Variable)	Number of points	1
	Output range	-320.00 to +320.00%
	Output refresh cycle	According to the specified operation cycle of this block (one of 0.1, 0.2, 0.5, 1, 2 seconds)
	Auto/manual switching	Possible (according to CX-Process Monitor, CX-Process Tool or correct signal from Step Ladder Program block/Contact Distributor block)
	High/low MV limit	High limit: -320.00 to +320.00%, low limit: -320.00 to +320.00% Note:The default low limit is -5.00% and default high limit is 105.00% to ensure that the valve becomes fully open or fully closed. If output less than 0.00% or more than 100% is meaningless, for example, in the case of time-proportional ON/OFF control for a heater, set these limits to 0.00% and 100.00, respectively, to prevent overshoot.
	MV high rate-of-change limit	None
	Preset MV switching	None
	MV hold	None
	MV tracking	None
	MV compensation	None
	Out-of-range processing at MV output destination block	PID integral action is stopped when the range is exceeded on the function block to which MV is connected, and unnecessary fluctuation of MV is prevented.
	MV error input	MV error is transferred to CX-Process Monitor when the MV error contact turns ON.
Alarm	PV alarm	4 (high/high limit, high limit, low limit, low/low limit), setting range: -15.00 to +115.00% Hysteresis: 0 to +115.00%
	Deviation alarm	1 (ON outside deviation) Standby sequence can be provided: standby started at power ON (alarm OFF even outside deviation range), alarm ON outside deviation range after entering deviation
State Output		1 current Set Point output (-15.00 to +115.00%), deviation output provided, no output for MV compensation

Note About PID Constant AT (auto-tuning) Function

The following description is applicable to both the Basic PID block (Block Model 011) and Advanced PID block (Block Model 012).

What is the "AT (auto-tuning) function?"

The AT function forcibly changes the manipulated variable (MV) according to the limit cycle mode to observe the characteristics of the control target, and automatically calculates the PID constants based upon the observation results.
This AT function is supported on the Loop Control Unit in the both the Basic PID block (Block Model 011) and Advanced PID block (Block Model 012).
Two types of AT function modes are available: standard AT and short AT.

AT Type	Description	
Standard AT	•When AT is started with PV outside of the "judgment deviation for provisional AT execution" range.	Before the Set Point is reached, provisional AT is executed temporarily so that provisional PID constants bring PV closer to the Set Point. The limit cycle is then generated by the specified limit cycle MV amplitude, and the PID constants are automatically calculated and stored.
	•When AT is started with PV inside of the "judgment deviation for provisional AT execution" range.	After PID control brings the PV closer to the Set Point without executing provisional AT, the limit cycle is then generated by the specified limit cycle MV amplitude, and the PID constants are automatically calculated and stored.
Short AT	•The limit cycle is generated directly by the MV amplitude of the MV high and low limit function without executing provisional AT, and the PID constants are automatically calculated and stored.	

Note: By setting the AT calculation gain (ITEM038), the user can adjust the extent that automatically stored values are influenced by new PID constants calculated by auto-tuning in either of the available AT types.

Description of AT-related ITEMs

Item	Description	Method use
AT type	Standard: Provisional AT (when the PV at the start of auto-tuning is outside of the judgment deviation for provisional AT execution) is executed, and the limit cycle is generated by the limit cycle MV amplitude. Short: Provisional AT is not executed. MV is amplified by the high and low values of the MV limit function to generate the limit cycle. Default is standard auto-tuning.	To shorten the time required for auto-tuning, select short auto-tuning. Note, however, that in this case distortion of the PV caused by the limit cycle increases as MV is amplified by the high and low values of the MV limit function. If the resulting values obtained by reducing the MV limit function high and low values to limit the amplitude are inappropriate, the limit cycle may not be generated.
AT command/AT Executing	This doubles as the AT command and the AT Executing flag. •AT command: Instructs execution of standard auto-tuning. When execution is instructed, the limit cycle is generated on the Set Point, and the PID constants are automatically calculated and stored. •AT Executing flag: This flag remains at 1 during execution of auto-tuning. When execution ends, the flag automatically returns to 0.	Execution is instructed after AT execution conditions are set to enabled. Execution of PID control using the AT result is first started when this flag is set to 0 after execution is instructed. For the duration that this flag is 0, apply interlocks to other controls as required using the Step Ladder Program. Note 1 If AT execution is instructed when the remote Set Point or SP rate-of-change limit is valid, execute auto-tuning with the current Set Point held. After AT execution, cancel the current Set Point hold. Note 2 When AT cancel is instructed during auto-tuning, PID control is started in a bumpless manner from MV at that moment in time.
Limit cycle MV amplitude	With standard auto-tuning, set the amplitude of MV for the Set Point when the limit cycle is generated. With short auto-tuning, limit cycle MV amplitude is invalid. Default is an MV amplitude of ±20% (total 40%).	To disable changes to MV of ±20% (total 40%) (for generating the limit cycle), decrease the MV amplitude value. To prevent generation of the limit cycle at changes of MV of ±20% (total 40%), increase the MV amplitude value.
Limit cycle hysteresis	Set the hysteresis for the Set Point when generating the limit cycle. In the case of reverse action, MV is turned ON by a hysteresis of SP-0.20%. (default)	If an unstable PV prevents a normal limit cycle from being generated, increase the limit cycle hysteresis value. Note, however, that setting the hysteresis value larger than necessary, impairs AT accuracy.
AT calculation gain	Set the gain for calculating the PID constants by AT. Default is 1.00.	Decrease gain to give priority to response. Increase gain to give priority to stability.
Judgment deviation for provisional AT execution	With standard auto-tuning, provisional AT is started when PV is within the range "SP - judgment deviation for provisional AT execution." With short auto-tuning, judgment deviation for provisional AT execution is invalid. Default is 10.00%.	If it takes too long to arrive at the Set Point as provisional AT is not executed, and overshooting caused by execution of provisional AT is not a problem, decrease the deviation setting. Alternatively, if overshooting caused by execution of provisional AT is a problem, increase the deviation.

AT non-executable states (conditions)

The table below shows the states in which AT cannot be executed. AT execution is canceled when these states are reached during AT execution.

Note: AT is also canceled when AT-related ITEMs have been changed.

AT can be executed in all states other than those in the following table.

AT non-executable states (conditions)	•Manual mode •PV compensation in progress (Advanced PID block only) •PV tracking in progress •PV error generated •MV compensation in progress •MV rate-of-change limit function in use •Preset MV in progress •MV hold in progress •MV tracking in progress •MV error generated •Integral action stopped (according to integral action stop switch) (Advanced PID block only) •When bumpless output between primary/secondary loops is enabled on the secondary side, and the secondary loop side is set as the Local Set Point, auto-tuning cannot be executed on the primary loop itself.
AT cancel conditions	•Auto-tuning is canceled when a parameter ITEM is written, and auto-tuning remains canceled after writing ends (applies to Loop Control Units of version 2.00 or before). •Auto-tuning is canceled when a cold start is performed. •When an auto-tuning error occurs (error is canceled when a cold start is performed or when AT execution is instructed again)

Limitations in writing ITEMs during AT

ITEMs other than stop block operation command (ITEM 000), AT command/AT executing (ITEM 035), and auto/manual switch (ITEM086) cannot be written during autotuning. (Applies to Loop Control Units of version 2.50 or later for both Basic PID and Advanced PID blocks.)

About AT errors

AT errors are stored as execution error code 15 to ITEM003 of Basic PID block (Block Model 011) and Advanced PID block (Block Model 012) if either of the following execution errors occurs:

- The limit cycle cannot be generated.
- The appropriate PID constants cannot be calculated even if the limit cycle is generated.

Example of waveforms produced during AT execution

Operation by standard AT

a)When AT is started with PV outside the "judgment deviation for provisional AT execution" range:

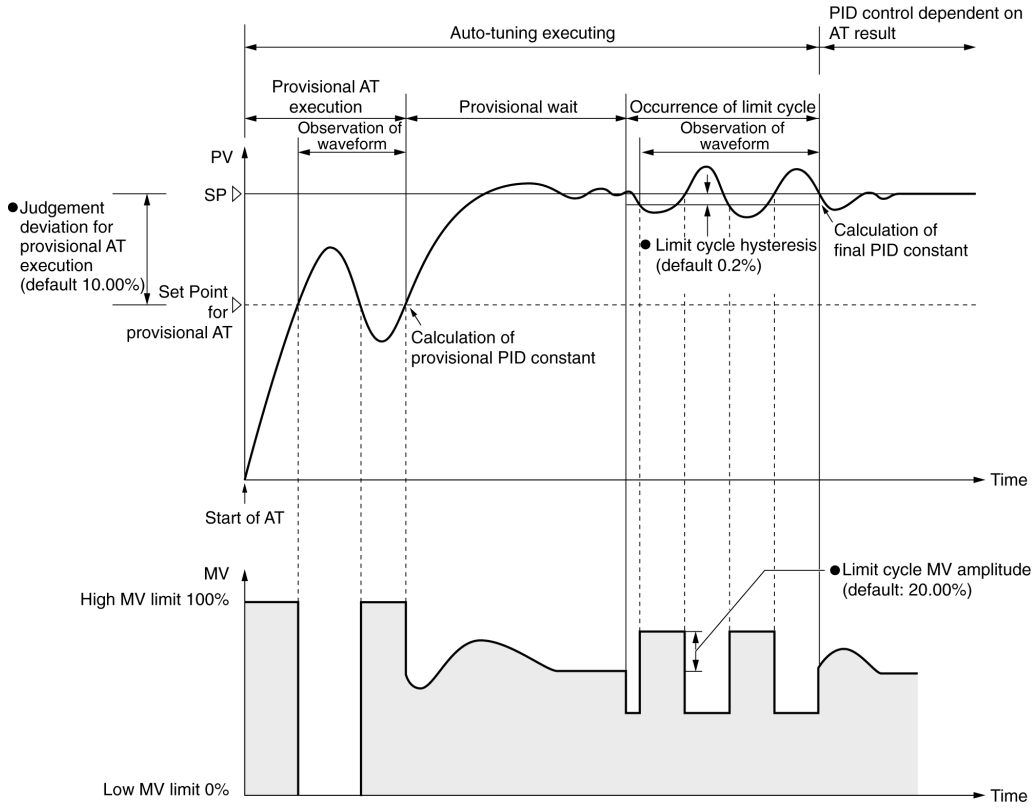

b)When AT is started with PV inside the "judgment deviation for provisional AT execution" range:

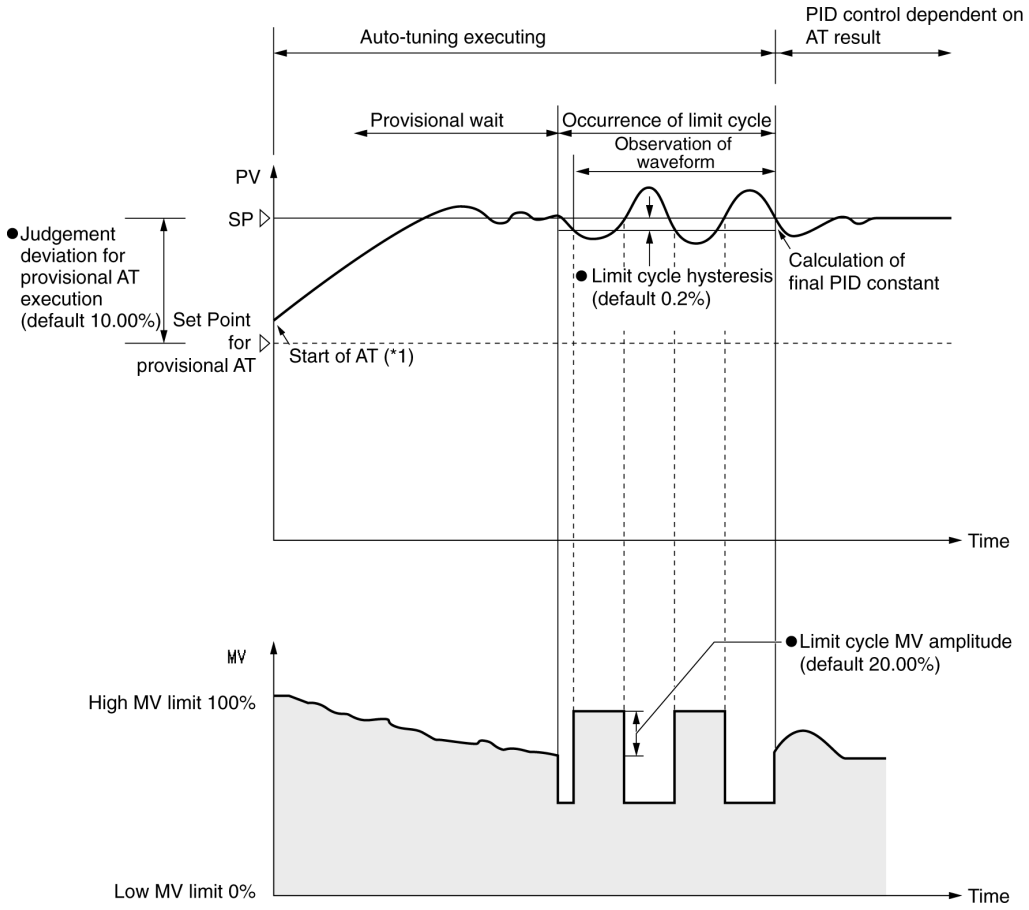

*1: •When the PID constants are at their default settings (P=100%, I=0 s, D=0 s) with PV within the judgment deviation for provisional AT execution range, it takes some time for PV to arrive at the Set Point and for limit cycle to start.
•When integral time I is 0 s with PV within the judgment deviation for provisional AT execution range, the Loop Control Unit converts the integral time to 240 s for execution of PID constants to bring the PV closer to the Set Point excluding offsets.

Operation by short AT

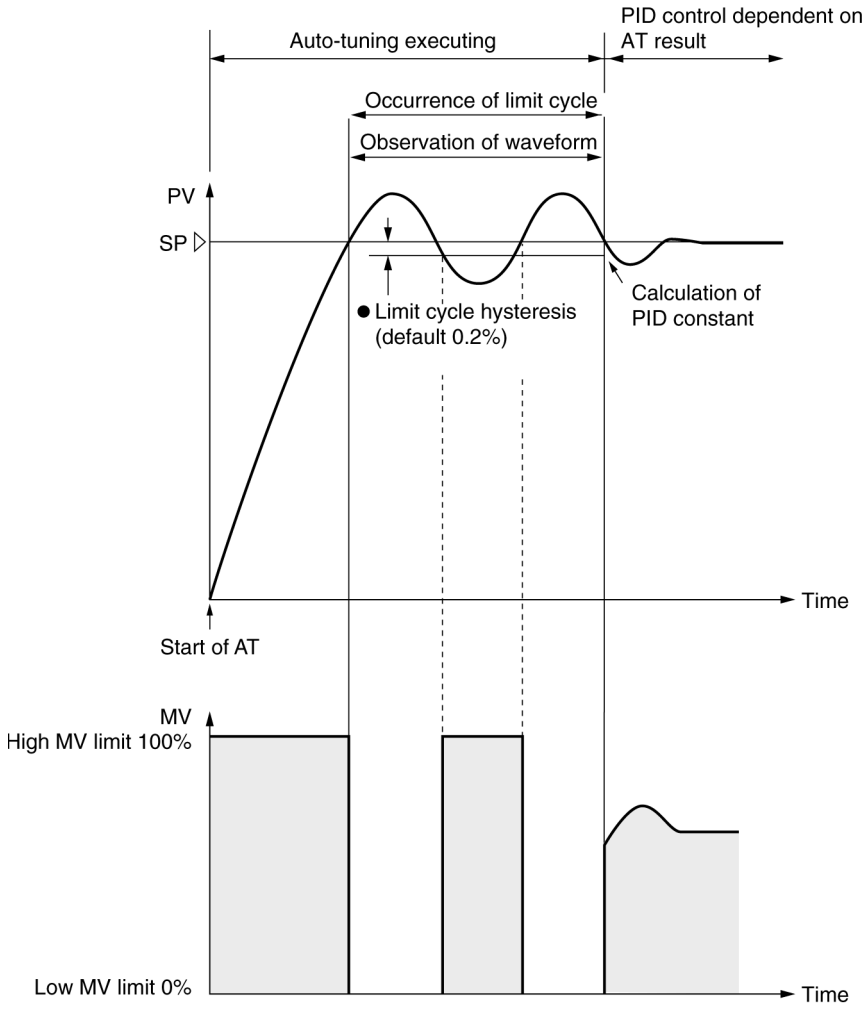

About 2 Degrees of Freedom PID Parameters α and β

2 degrees of freedom PID can be achieved based on the PID constants set automatically (by AT) or manually in Basic PID block (Block Model 011) and Advanced PID block (Block Model 012).
"2 degrees of freedom PID" is PID that adapts to the two characteristics of disturbance response and trackability to changes in the Set Point. This type of PID is used as the PID on the Loop Control Unit.
The various types of PID control shown in the figure below can be selected by the user setting the two parameters α and β as desired. Selection in this way enables tracking to changes in the Set Point without changing the disturbance response.
The setting values are:
α = 0.65
β = 1.0

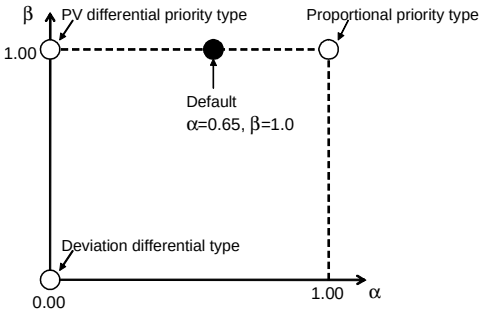

- Proportional priority type (I-PD):
  Proportional and differential operations function on PV, and accumulation is performed on the deviation. Tracking to changes in the Set Point is slower than the PV differential priority type and deviation differential type. Bumps (sudden changes) do not occur in MV even if the Set Point changes. This control type is effective when overshooting is not allowed in the control.
- PV differential priority type:
  Disturbance response is high as differential operation functions on the PV. Trackability to changes in the Set Point is slower than the device differential type.
- Deviation differential type:
  Trackability to changes in the Set Point is high as differential operation functions on the deviation. This control type is effective when control is used for PID on the secondary side in cascade control.

The default values of both parameters α and β enable satisfactory control in almost all applications. However, adjustment is effective in the following instances.

- If the control waveform is flat and settling is slow when moving from a ramp to a soak in program control, set parameter α to a smaller value.
- If tracking to changes in the Set Point is poor in Remote Set Point control, set parameter α to a smaller value.

The following figure shows the response with respect to changes in the Set Point when parameter α has been changed:

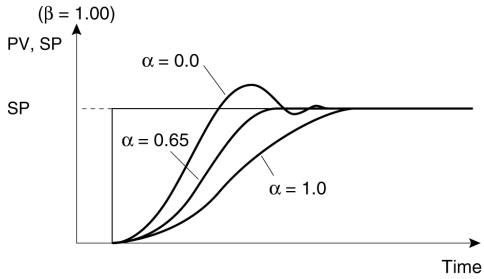

Block Model	Block Name	Block Address
<012>	Advanced PID	001 to 032

Outline

This function block is provided with the functions required for achieving advanced PID.

•This function block has all of the functions provided in the Basic PID block.
•It is also provided with the following functions:

SP rate-of-change limit, PV compensation, manual reset/integration OFF, MV compensation, MV rate-of-change limit, MV high/low limit, preset MV, MV hold, MV tracking

•Auto-tuning of PID constants can be executed according to the limit cycle mode. (For details, see "About the PID Constant AT (auto-tuning) Function" on page 39.)

Function block applications

Cascade control with tracking function, override control, dead time compensation, sample PI control, feedforward control

Block diagram

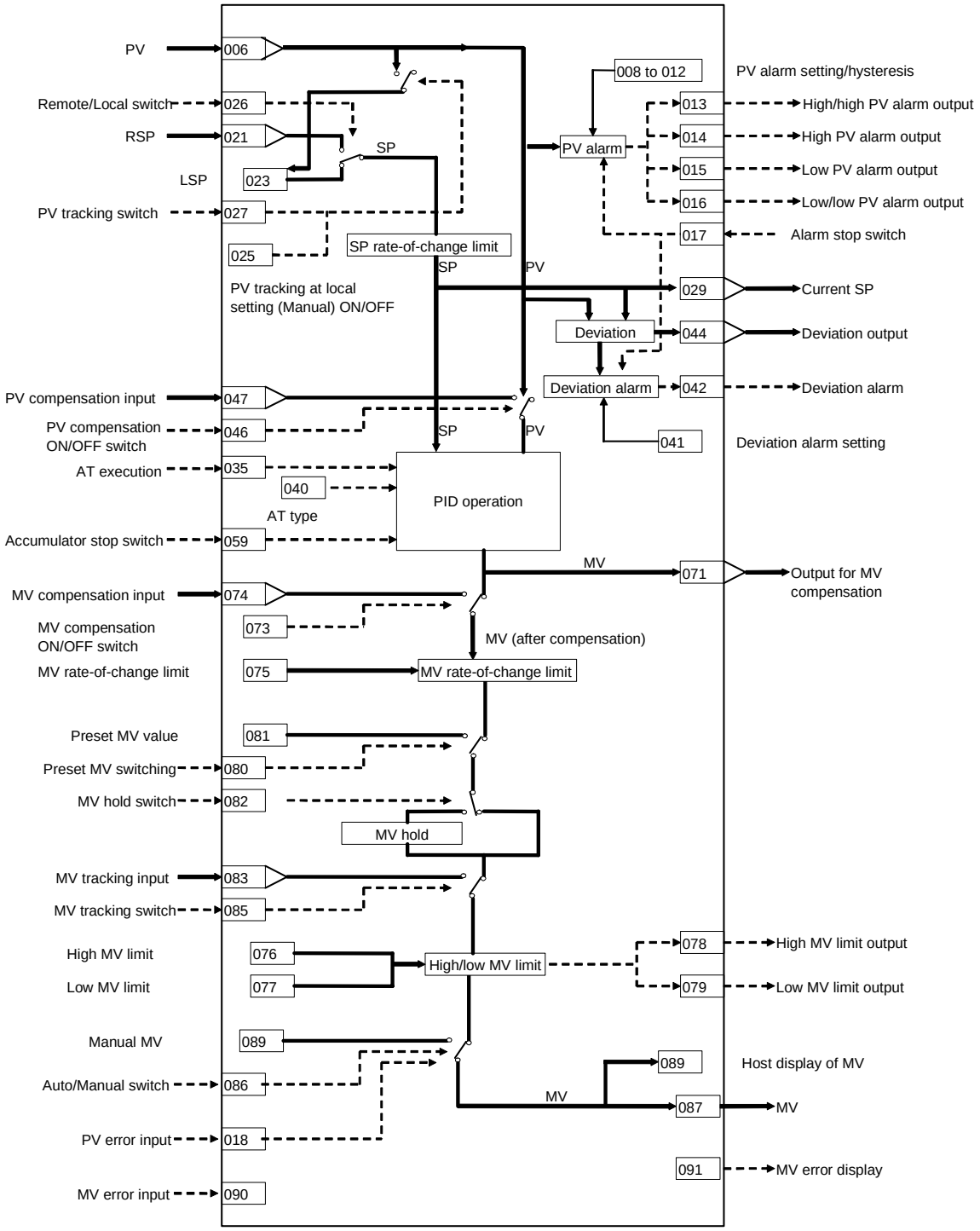

ITEM list

*1:On the CX-Process Monitor, the R/W mode is indicated in the Tuning screen or in the Control screen.

ITEM TYPE	ITEM	Symbol	Data Description	Data Range	Default	COLD start initialization	R/W Mode R: Read, W: Write, R/W: R/W-enabled, -: R/W-disabled Note: r and r/w: Read and read/write for validate action or monitor run status by CX-Process Tool or Monitor, (S): Initial setting data, (O): Operation data					Data Length (bytes)
							According to CX-Process Tool	According to CX-Process Monitor *1	According to ITEM Setting block	According to Step Ladder Program	Send/ Receive All Blocks	
Contact input	000		Stop block operation command (0: Cancel stop, 1: Stop)	0, 1	0	–	–	R/W	–	–	S/R	1
Parameter	001		Comment	23 characters	Block name	–	R/W(S)	–	–	–	–	24
	002		Block Model: Advanced PID	012	012	–	R/W(S)	–	–	–	–	2
Special	003		Execution error display 0: Normal, Other: Error (See Appendix “Execution Error Code List.”)		0000	–	r	–	–	–	S	2
Parameter	004		Operation cycle (sec) 0: Common, 1: 0.1, 2: 0.2, 3: 0.5, 4: 1, 5: 2	0 to 5	0	–	R/W(S)	–	–	–	–	2

PV

*1:On the CX-Process Monitor, the R/W mode is indicated in the Tuning screen or in the Control screen.

ITEM TYPE	ITEM	Symbol	Data Description	Data Range	Default	COLD start initialization	R/W Mode R: Read, W: Write, R/W: R/W-enabled, -: R/W-disabled Note: r and r/w: Read and read/write for validate action or monitor run status by CX-Process Tool or Monitor, (S): Initial setting data, (O): Operation data					Data Length (bytes)
							According to CX-Process Tool	According to CX-Process Monitor *1	According to ITEM Setting block	According to Step Ladder Program	Send/ Receive All Blocks	
Analog input wiring information	006		PV source designation BBB: Block address, III: ITEM No.	BBBIII	000000	–	R/W(S)	–	–	–	–	4
Analog input	007	PV	PV input	-15.00 to +115.00%	0.00	Yes	r	R	–	–	S	2
Parameter	008		High/high alarm setting	-15.00 to +115.00%	115.00	–	R/W(O)	R/W	W	–	S/R	2
	009		High alarm setting	-15.00 to +115.00%	100.00	–	R/W(O)	R/W	W	–	S/R	2
	010		Low alarm setting	-15.00 to +115.00%	0.00	–	R/W(O)	R/W	W	–	S/R	2
	011		Low/low alarm setting	-15.00 to +115.00%	-15.00	–	R/W(O)	R/W	W	–	S/R	2
	012		Hysteresis setting	0 to 115.00%	1.00	–	R/W(S)	–	W	–	–	2
Contact output	013	HH	High/high alarm output	0, 1	0	Yes	–	R	–	R	S	1
	014	H	High alarm output	0, 1	0	Yes	–	R	–	R	S	1
	015	L	Low alarm output	0, 1	0	Yes	–	R	–	R	S	1
	016	LL	Low/low alarm output	0, 1	0	Yes	–	R	–	R	S	1
Contact input	017	S1	Alarm stop switch 0: Alarm, 1: Stop	0, 1	0	–	R/W(O)	R/W	–	R/W	S/R	1
Connection terminal contact input	018		PV error contact source designation	BBBIII	000000	–	R/W(S)	–	–	–	–	4
Contact output	019	PVE	PV execution error indication 0: Normal, 1: Error → MANUAL mode	0, 1	0	Yes	–	R	–	R	S	1
Parameter	020		Alarm limit *2 0: No, 1: Yes Note: Limits the alarm set value to between 0.00% and 100.00%.	0, 1	0	–	R/W (S)	–	–	–	–	1

*2: If ITEM 020 (alarm limit) it set to 1 (ON), the alarm set range will be limited to between 0.00% and 100.00% as follows (supported by Loop Control Unit version 2.50 or later):

- If the high/high alarm setting (ITEM 008) or the high alarm set value (ITEM 009) is set to a value over 100.00%, the alarm output will not turn ON even if the PV exceeds the alarm set value.
- If the low/low alarm setting (ITEM 011) or the low alarm set value (ITEM 010) is set to a value below 0.00%, the alarm output will not turn ON even if the PV exceeds the alarm set value.
- If the deviation alarm setting (ITEM 041) is set to a value over 100.00%, the alarm output will not turn ON even if the PV exceeds the deviation range.
- If the high MV limit (ITEM 076) is set to a value over 100.00%, the high MV limit output will not turn ON even if the high limit is reached. The high limit function, however, will work.
- If the low MV limit (ITEM 077) is set to a value below 0.00%, the low MV limit output will not turn ON even if the low limit is reached. The low limit function, however, will work.

Setting Value Set Point

*1:On the CX-Process Monitor, the R/W mode is indicated in the Tuning screen or in the Control screen.

ITEM TYPE	ITEM	Symbol	Data Description	Data Range	Default	COLD start initialization	R/W Mode R: Read, W: Write, R/W: R/W-enabled, -: R/W-disabled Note: r and r/w: Read and read/write for validate action or monitor run status by CX-Process Tool or Monitor, (S): Initial setting data, (O): Operation data					Data Length (bytes)
							According to CX-Process Tool	According to CX-Process Monitor *1	According to ITEM Setting block	According to Step Ladder Program	Send/ Receive All Blocks	
Analog input wiring information	021		Remote Set Point source designation	BBBIII	000000	–	R/W(S)	–	–	–	–	4
Analog input	022	RSP	Remote Set Point input	-15.00 to +115.00%	0.00	Yes	–	–	–	–	–	2
Parameter	023		Local Set Point setting	-15.00 to +115.00%	0.00	–	R/W(O)	W	W	–	R	2
	024		Set Point setting mode (default) 0: Local only, 1: Remote/Local Note: Setting to 0 invalidates ITEM026.	0, 1	0	–	R/W(S)	R	–	–	S/R	1
	025		PV tracking at local setting (Manual) 0: Not used, 1: Used	0, 1	0	–	R/W(S)	–	–	–	–	1
Contact input/ parameter	026	R/L	Remote/Local switch 0: Local, 1: Remote Note: Valid only when ITEM024 is 1	0, 1	0	Yes	R/W(O)	R/W	–	R/W	S/R	1
Contact input	027	S2	PV tracking switch 0: Not used, 1: Used (valid only in Local mode)	0, 1	0	Yes	R/W(O)	–	–	R/W	S/R	1
Parameter	028		SP rate-of-change limit (0: No restriction) Note: The time unit is set in ITEM 030.	0 to 115.00%/Time unit	0.00	–	R/W(S)	–	W	–	–	2
Analog output	029	SP	Current SP output	-15.00 to +115.00%	0.00	Yes	r/w	R	–	–	S	2
Parameter	030 *2	TMU	SP rate-of-change limit time unit 0: s, 1: min, 2: hr	0 to 2	0	–	R/W (S)	–	–	–	–	1
Parameter	032		Bumpless output between primary/secondary loops (self node is secondary side) 0: Not used, 1: Used	0, 1	0	–	R/W(S)	–	–	–	–	1

*2: These ITEMs were added in Loop Control Unit Ver.2.50.

AT (auto-tuning)

*1:On the CX-Process Monitor, the R/W mode is indicated in the Tuning screen or in the Control screen.

ITEM TYPE	ITEM	Symbol	Data Description	Data Range	Default	COLD start initialization	R/W Mode R: Read, W: Write, R/W: R/W-enabled, -: R/W-disabled Note: r and r/w: Read and read/write for validate action or monitor run status by CX-Process Tool or Monitor, (S): Initial setting data, (O): Operation data					Data Length (bytes)
							According to CX-Process Tool	According to CX-Process Monitor *1	According to ITEM Setting block	According to Step Ladder Program	Send/ Receive All Blocks	
Parameter	035*2		AT command/AT Executing •0: Cancel AT, 1: Execute AT as AT command •AT Executing flag remains at 1 during AT execution. Flag returns to 0 automatically after AT execution ends normally.	0, 1	0	Yes	R/W(O)	R/W	–	R/W	S/R	1
	036*2		Limit cycle MV amplitude Note: Set as ±%.	5.00 to 50.00	20.00	–	R/W(O)	–	–	–	–	2
	037*2		Limit cycle hysteresis	0 to 10.00%	0.20	–	R/W(O)	–	–	–	–	2
	038*2		At calculation gain	0.10 to 10.00	1.00	–	R/W(O)	–	–	–	–	2
	039*2		Judgment deviation for provisional AT execution	0 to 100.00%	10.00	–	R/W(O)	–	–	–	–	2
	040*2		AT type (0: Standard type, 1: Reduced time type)	0, 1	0	–	R/W(O)	–	–	–	–	1

*2: These ITEMs were added in Loop Control Unit Ver.1.50.

Deviation

*1:On the CX-Process Monitor, the R/W mode is indicated in the Tuning screen or in the Control screen.

ITEM TYPE	ITEM	Symbol	Data Description	Data Range	Default	COLD start initialization	R/W Mode R: Read, W: Write, R/W: R/W-enabled, -: R/W-disabled Note: r and r/w: Read and read/write for validate action or monitor run status by CX-Process Tool or Monitor, (S): Initial setting data, (O): Operation data					Data Length (bytes)
							According to CX-Process Tool	According to CX-Process Monitor *1	According to ITEM Setting block	According to Step Ladder Program	Send/ Receive All Blocks	
Parameter	041		Deviation alarm setting (hysteresis is set at ITEM012)	0 to 115.00%	115.00	–	R/W(O)	–	W	–	S/R	2
Contact output	042	DA	Deviation alarm output	0, 1	0	Yes	–	R	–	R	S	1
Parameter	043		Deviation alarm standby sequence 0: Not used, 1: Used Note: Restart in standby sequence by cold start	0, 1	1	–	R/W(S)	–	–	–	–	1
Analog output	044	Y1	Deviation output (deviation = PV - SP)	±115.00%	0.00	Yes	r/w	–	–	–	S	2
Parameter	045		PV compensation mode 0: Not used, 1: Addition, 2: Subtraction, 3: Substitution	0 to 3	0	–	R/W(S)	–	–	–	–	1
Contact input	046	S3	PV compensation ON/OFF switch 0: OFF, 1: ON	0, 1	0	–	R/W(O)	–	–	R/W	S/R	1
Analog input wiring information	047	X1	PV compensation source designation	BBBIII	000000	–	R/W(S)	–	–	–	–	4

Control

*1:On the CX-Process Monitor, the R/W mode is indicated in the Tuning screen or in the Control screen.

ITEM TYPE	ITEM	Symbol	Data Description	Data Range	Default	COLD start initialization	R/W Mode R: Read, W: Write, R/W: R/W-enabled, -: R/W-disabled Note: r and r/w: Read and read/write for validate action or monitor run status by CX-Process Tool or Monitor, (S): Initial setting data, (O): Operation data					Data Length (bytes)
							According to CX-Process Tool	According to CX-Process Monitor *1	According to ITEM Setting block	According to Step Ladder Program	Send/ Receive All Blocks	
Parameter	051		Processing cycle of PID control (0: cycle set at ITEM004) Note: When operation cycle is set to value other than "0", the setting value of ITEM004 is automatically changed to "4".	(0), 1, 2, 4, 8, 16, 32, 64, 128s	0	–	R/W(S)	–	–	–	–	2
	052		Control action 0: Reverse (MV decreases by PV increase.), 1: Direct (MV increases by PV increase.)	0, 1	0	–	R/W(S)	–	–	–	–	1
	054	P	Proportional band	0.1 to 999.9%	100.0	–	R/W(O)	R/W	W	–	S/R	2
	055	I	Integral time (0: No integral action)	0 to 9999s	0	–	R/W(O)	R/W	W	–	S/R	2
	056	D	Differential time (0: No differential action)	0 to 9999s	0	–	R/W(O)	R/W	W	–	S/R	2
	057	MRT	Manual reset (enabled when accumulator is OFF)	±320.00%	0.00	–	R/W(O)	R/W	W	–	S/R	2
Contact input	059	S4	Input of accumulator stop switch 0: Not used, 1: Stop accumulation	0, 1	0	Yes	R/W(O)	–	–	R/W	S/R	1
Contact input wiring information	061	MIE	Out-of-range processing at the MV output destination block (BBB: Destination block address, III: ITEM No., 000000: Processing OFF) Note: When contact turns ON, accumulator in PID control is stopped.	BBBIII	000000	–	R/W(S)	–	–	–	–	4
Parameter	062*3		MV Output Retrace Time for PV Error*4 0: Disabled	0 to 10	0	–	R/W(S)	–	–	–	–	2
	065		Advanced PID parameter α	0.00 to 1.00	0.65	–	R/W(S)	–	–	–	–	2
	066		Advanced PID parameter β	0.00 to 1.00	1.00	–	R/W(S)	–	–	–	–	2

*2: These ITEMs were added in Loop Control Unit Ver.1.50.

*3: These functions were added in Loop Control Unit Ver.2.00.

*4: Based on the value specified in ITEM062, the MV will be restored to the output value at the times specified below when a PV error is detected.
If the operation cycle (ITEM004) is 1 s, the value specified in ITEM062 x 1 s. If the operation cycle is 2 s, the value specified in ITEM062 x 2 s

MV

*1:On the CX-Process Monitor, the R/W mode is indicated in the Tuning screen or in the Control screen.

ITEM TYPE	ITEM	Symbol	Data Description	Data Range	Default	COLD start initialization	R/W Mode R: Read, W: Write, R/W: R/W-enabled, -: R/W-disabled Note: r and r/w: Read and read/write for validate action or monitor run status by CX-Process Tool or Monitor, (S): Initial setting data, (O): Operation data					Data Length (bytes)
							According to CX-Process Tool	According to CX-Process Monitor *1	According to ITEM Setting block	According to Step Ladder Program	Send/ Receive All Blocks	
Analog output	071	Y2	Output for MV compensation	±320.00%	0.00	Yes	r/w	–	–	–	–	2
Parameter	072		MV compensation mode 0: Not used, 1: Addition, 2: Subtraction, 3: Substitution	0 to 3	0	–	R/W(S)	–	–	–	–	1
	073	S5	MV compensation ON/OFF switch 0: OFF, 1: ON	0, 1	0	–	R/W(O)	–	–	R/W	S/R	1
Analog input wiring information	074	X2	MV compensation source designation	BBBIII	000000	–	R/W(S)	–	–	–	–	4
Parameter	075		MV rate-of-change limit (0: No restriction)	0 to 115.00%/s	0.00	–	R/W(O)	–	W	–	–	2
	076	MH	High MV limit	±320.00%	105.00	–	R/W(O)	R/W	W	–	S/R	2
	077	ML	Low MV limit	±320.00%	-5.00	–	R/W(O)	R/W	W	–	S/R	2
Contact output	078	U1	High MV limit output 1: High limit or higher, 0: Lower than limit Valid only for AUTO mode; always 0 for Manual mode.	0, 1	0	Yes	–	R	–	R	S	1
	079	U2	Low MV limit output 1: Low limit or lower, 0: Higher than limit Valid only for AUTO mode; always 0 for Manual mode.	0, 1	0	Yes	–	R	–	R	S	1
Contact input	080	S6	Preset MV switch 1: Select preset MV	0, 1	0	Yes	R/W(O)	–	–	R/W	S/R	1
Parameter	081		Preset MV value	±320.00%	0.00	–	R/W(O)	–	W	–	–	2
Contact input	082	S7	MV hold switch 0: Not used, 1: Hold MV	0, 1	0	Yes	R/W(O)	–	–	R/W	S/R	1
Analog input wiring information	083	X3	MV tracking source designation	BBBIII	000000	–	R/W(S)	–	–	–	–	4
Parameter	084	X3	MV tracking input	±320.00%	0.00	Yes	–	–	–	–	–	2
Contact input	085	S8	MV tracking switch 0: Not used, 1: Used	0, 1	0	Yes	R/W(O)	–	–	R/W	S/R	1
Contact input/ parameter	086	A/M	Auto/Manual switch 0: Manual, 1: Auto	0, 1	0	Yes	R/W(O)	R/W	–	R/W	S/R	1
Analog output	087	MV	MV output	±320.00%	0.00	Yes	r/w	–	–	–	–	2
Parameter	088		Inversion of host display of MV 0: Not used, 1: Used Note: "Inversion" changes 0 to 100% range to 100 to 0%.	0, 1	0	–	R/W(S)	–	–	–	–	1
	089		Host display of MV (Auto/Manual switch : Auto, Manual) or Manual MV (Auto/Manual switch : Manual)	±320.00%	0.00	Yes	R/W(O)	R/W	W	–	S/R	2
Connection terminal contact input	090		MV error contact source designation	BBBIII	000000	–	R/W(S)	–	–	–	–	4
Contact output	091	MVE	MV error display 0: Normal, 1: Error	0, 1	0	Yes	–	R	–	R	S	1

Data for host display

*1:On the CX-Process Monitor, the R/W mode is indicated in the Tuning screen or in the Control screen.

ITEM TYPE	ITEM	Symbol	Data Description	Data Range	Default	COLD start initialization	R/W Mode R: Read, W: Write, R/W: R/W-enabled, -: R/W-disabled Note: r and r/w: Read and read/write for validate action or monitor run status by CX-Process Tool or Monitor, (S): Initial setting data, (O): Operation data					Data Length (bytes)
							According to CX-Process Tool	According to CX-Process Monitor *1	According to ITEM Setting block	According to Step Ladder Program	Send/ Receive All Blocks	
Parameter	098		MV index position	-15.00 to +115.00%	0.00	Yes	R/W(O)	R/W	W	–	S/R	2
	099		Label	0 to 15	0	Yes	R/W(O)	R/W	W	–	S/R	2

Note1 The values of ITEMs that cannot be set (indicated as either "-" or "r/w" in the above list) on CX-Process Tool such as the PV tracking switch, PV compensation ON/OFF switch and alarm stop switch that were active before the instantaneous power interruption or running of the Loop Control Unit was stopped are cleared when a cold start is performed. When a hot start is performed, these values are held. The internally held values for the standby states in standby sequences that were active before the instantaneous power interruption or running of the Loop Control Unit was stopped are also cleared. When a hot start is performed, these values are held.

Note2 To send data of the Advanced PID block to CX-Process Monitor by the Block Send Terminal to Computer blocks (Block Models 403 and 404), set the operation cycle of the Send to Computer blocks to the same or longer than that of the Advanced PID block at ITEM004. If the operation cycle of Send to Computer blocks is set to a shorter value, the Set Point momentarily becomes 0 when a cold start is performed.
Bumpless output of MV functions when PID constants are changed in the Advanced PID block (Block Model 012).
For this reason, MV is no longer updated and PID control is not executed correctly if variables are written to PID constants at each operation cycle by the Variable ITEM Setting block (Block Model 172).
If this happens, use the Step Ladder Program block (Block Model 301) to provide a time interval for writing by the ITEM Setting block.

List of tag ITEMs on CX-Process Monitor or SCADA software

The following tag ITEMs are used to specify ITEMs with either 1) Monitor tags when sending function blocks to the CX-Process Monitor from 1-Block/4-Block Send Terminal to Computer (Block Model 403/404) or 2) CSV tags from SCADA software when sending/receiving data to/from the CPU Unit using Receive All Blocks (Block Model 461)/Send All Blocks (Block Model 462). All tag ITEMs are fixed and cannot be changed.

ITEM	Data Name	CSV Tags in CX-Process Monitor	CSV Tags in SCADA Software
		Tag ITEM (fixed)	Tag ITEM (fixed)
000	Stop block operation command	MT_ST	MT_ST
003	Execution error display	None	ERR
007	PV input	PV	PV
008	High/high alarm setting	HH_SP	HH_SP
009	High alarm setting	H_SP	H_SP
010	Low alarm setting	L_SP	L_SP
011	Low/low alarm setting	LL_SP	LL_SP
013	High/high alarm output	HH	HH
014	High alarm output	H	H
015	Low alarm output	L	L
016	Low/low alarm output	LL	LL
017	Alarm stop switch	ALM_OFF	AOF
019	PV error indication	PV_ABN	PV_ABN
023	Local Set Point setting	None	SP
024	Set Point setting mode (default)	CAS_SET	CAS_SET
026	Remote/Local switch	R/L_SW	R/L_SW
027	PV tracking switch	None	S2
029	Current Set Point output	SP	SP
035	AT command/AT Executing	AT	AT
041	Deviation alarm setting	DVA_SP	DVA_SP
042	Deviation alarm output	DVA	DVA
044	Deviation output	None	DV
046	PV compensation ON/OFF switch	None	S3
054	Proportional band	P	P
055	Integral time	I	I
056	Differential time	D	D
057	Manual reset	None	MRT
059	Input of accumulator stop switch	None	S4
073	MV compensation ON/OFF switch	None	S5
076	High MV limit	MH_LMT	MH_LMT
077	Low MV limit	ML_LMT	ML_LMT
078	MV high limit output	MHA	MHA
079	MV low limit output	MLA	MLA
080	Preset MV switch	None	S6
082	MV hold switch	None	S7
085	MV tracking switch	None	S8
086	Auto/Manual switch	A/M_SW	A/M_SW
089	Host display of MV (Auto/Manual switch : Auto, Manual) or Manual MV (Auto/Manual switch : Manual)	MV	MV
091	MV error display	MV_ABN	MV_ABN
098	MV index position	MV_IDX	MV_IDX
099	Label	OP_MK	OP_MK

Description of functions

Item		Description
PV (Process Variable) Input	Number of points	1
	Input range	-15.00 to +115.00%
	Operation function	None (Calculation of square root, first-order-lag, bias, etc. Is required by external blocks.)
	Sampling cycle	According to the specified operation cycle of this block (one of 0.1, 0.2, 0.5, 1, 2 seconds) Note, however, that the external input refresh cycle of the entire instrumentation system differs from this operation cycle. (See 3-2 Description of Operation in the User's Manual.)
	PV error input	When the PV error contact turns ON, the Loop Control Unit is forced to enter the Manual mode, and the MV value active at that moment is held. At the same time, the PV error is transferred to the CX-Process Monitor. The disconnected line detection output ITEM of analog input (AI) function blocks is specified as the source designation for use. This enables forced switching to the Manual mode when a disconnected line is detected on the Analog Input Unit, and transfer of the PV error to CX-Process Monitor at the same time.
	PV compensation	When the PV compensation input switch is set to 1 (ON), arithmetic operation is performed on the PV signal that is input to PID control. PV compensation is enabled only in the Auto mode. One of the following three operations is possible: •Addition: The external PV compensation input value is added to the PV signal, and the result is assigned to PID control. •Subtraction: The external PV compensation input value is subtracted from the PV signal, and the result is assigned to PID control. •Substitution: The PV signal is substituted with the external PV compensation input value, and the result is assigned to PID control. When the PV compensation input switch is OFF, the PV signal is returned to. Example: This operation is used for dead time compensation control (additive).
SP (Set Point)	Number of points	1
	Setting range	-15.00 to +115.00%
	Remote/Local switching	Possible
	SP rate-of-change limit	Possible (0 to 115.00%/s)
	PV tracking at manual setting of the Local Set Point	The Local Set Point can be made to track PV when the mode is switched to the Manual mode. When the mode is returned to the Auto mode, control is started with PV equaling the Set Point. Sudden changes in the MV caused at switching back to the Auto mode do not occur.
	PV tacking	Matches the SP (Set Point) to the PV (Process Variable) when the PV tracking switch is set to 1 (ON), and hold SP and PV in this matched relationship. When the PV tracking switch is OFF, the Loop Control Unit can be run in a bumpless manner from the PV value.
	Bumpless processing between primary/secondary loops	When the self node is performing cascade control as the secondary controller, processing is performed on the MV of the primary controller to be input as follows: •When the Set Point of the self node is Local (LSP): The primary controller is switched to the Manual mode, and the Local Set Point of the self node is overwritten on the MV of the primary controller. •When the Set Point of the self node is Remote (RSP): The primary controller is switched to the Auto mode, and the MV of the primary controller is input as the Remote Set Point as per normal.

Item		Description	
PID Control	Control method	Advanced PID Various PID methods (proportional priority type, PV differential priority type, deviation differential type, etc.) can be selected according to the settings of parameters α and β.) (For details, refer to the description for the Basic PID block.)	
	Control action	Direct/reverse switchable	
	PID Constant	1 set AT (auto-tuning) can automatically set according to limit cycle mode. (For details, see page 39 "About PID Constant AT Functions. ")	
		Proportional band	0.1 to 999.9% (0.1% increments)
		Integral time	0 to 9999 sec. (1 second increments) 0: No accumulator Integral stop can be indicated from external contacts.
		Differential time	0 to 9999 sec. (1 second increments) 0: No differentiation
	Manual reset	-320.00 to +320.00% (0.00% increments) Bumpless output at manual reset	
MV (Manipulated Variable)	Number of points	1	
	Output range	-320.00 to +320.00%	
	Output refresh cycle	According to the specified operation cycle of this block (one of 0.1, 0.2, 0.5, 1, 2 seconds)	
	Auto/manual switching	Possible (according to CX-Process Monitor, CX-Process Tool or correct signal from Step Ladder Program block/Contact Distributor block)	
	High/low MV limit	High limit: -320.00 to +320.00%, low limit: -320.00 to +320.00% Note:The default low limit is -5.00% and default high limit is 105.00% to ensure that the valve becomes fully open or fully closed. If output less than 0.00% or more than 100% is meaningless, for example, in the case of time-proportional ON/OFF control for a heater, set these limits to 0.00% and 100.00, respectively, to prevent overshoot.	
	MV rate-of-change limit	0 to 115.00%/s	
	Preset MV switching	Possible (according to contacts from other function blocks) When the preset MV switch is set to ON, the MV switches to the preset MV (fixed value) and control is continued at this value. When the PV tracking switch is OFF, the Loop Control Unit can be run in a bumpless manner from the preset MV value. Preset MV switching is enabled only in the Auto mode.	
	MV hold	Possible (according to contacts from other function blocks) The MV (Manipulated Variable) is held at the current value when the MV hold switch is set to 1 (ON). When the MV hold switch is OFF, the MV is returned to from in a bumpless manner from the MV hold value. (MV hold is enabled only in the Auto mode.)	
	MV tracking	Possible (according to contacts from other function blocks) The MV is switched (tracks) to the input value from other function blocks. When the MV tracking switch is set to 1 (ON), the MV is made to match the value of the external MV tracking input, and the MV and MV tracking input are held in this matched relationship. When the switch is OFF, MV is returned to on a bumpless manner from the value of the MV tracking input. MV tracking is enabled only in the Auto mode. MV output is also bumpless when switching between the Auto and Manual modes.	
	MV compensation	Possible (according to contacts from other function blocks) When the MV compensation input switch is set to 1 (ON), arithmetic operation is performed on the MV signal that is input to PID control. MV compensation is enabled only in the Auto mode. One of the following three operations is possible: •Addition: The external MV compensation input value is added to the MV signal. •Subtraction: The external MV compensation input value is subtracted from the MV signal. •Substitution: The MV signal is substituted with the external MV compensation input value. When the MV compensation input switch is OFF, the MV signal from the PID control is returned to. MV at this time changes in a bumpless manner.	

Item		Description
MV (Manipulated Variable)	Out-of-range processing MV output destination block	PID integral action is stopped when the range is exceeded on the function block to which MV is connected, and unnecessary fluctuation of MV is prevented.
	MV error input	MV error is transferred to CX-Process Monitor when the MV error contact turns ON. The disconnected line detection output ITEM of analog output (AO) function blocks is specified as the source designation for use. This enables transfer of the MV error to CX-Process Monitor when a disconnected line is detected on the Analog Output Unit.
Alarm	PV alarm	4 (high/high limit, high limit, low limit, low/low limit), setting range: -15.00 to +115.00% Hysteresis: 0 to +115.00%
	Deviation alarm	1 (ON outside deviation) Standby sequence can be provided: standby started at power ON (alarm OFF even outside deviation range), alarm ON outside deviation range after entering deviation
State Output		1 deviation output (-115.00 to +115.00%) 1 output for MV compensation (-320.00 to +320.00%)

Note1 About PID Constant AT (auto-tuning) Function
For details on this function, see the item of the same description in the Basic PID block (Block Model 011).

Note2 About 2 Degrees of Freedom PID Parameters α and β
"2 degrees of freedom PID" is PID that adapts to the two characteristics of disturbance response and trackability to changes in the Set Point. This type of PID is used as the PID on the Loop Control Unit. For details, see the description for the Basic PID block (Block Model 011).

Block Model	Block Name	Block Address
<013>	Blended PID	001 to 032

Outline

This function block performs PID control on the cumulative value (cumulative deviation) between the accumulated value PV and accumulated value Remote Set Point. Ratio control of flowrate accumulated values is possible as this function block is provided with a ratio to accumulated Remote Set Point function.

- This function block is provided with cumulative deviation alarm output.
- It is also provided with an accumulation counter for converting PV four digits to eight digits.
- It is also provided with PV and Remote Set Point instantaneous value output.

Note: As this function block is a Remote Set Point input type function block, it is generally used as the slave for a Batch Flowrate Capture block (Block Model 014) as the master.

Function block applications

The PV is input in series as the Remote Set Point with the Batch Flowrate Capture block (Block Model 014) set as the master. Accumulated values (0 to 9999) from a container type flowmeter (e.g. oval type) are input as the PV to perform ratio control between multiple function blocks.

Note: The value obtained by accumulating the pulse input from a Pulse Input Unit (CS1W-PPS01) by the PI 4-point Terminal block (Block Model 562) is input as the accumulated value PV.

Example Control while maintaining the ratio between batch capture amounts of liquids B and C at a constant ratio in response to the batch capture amount of liquid A.

Block diagram

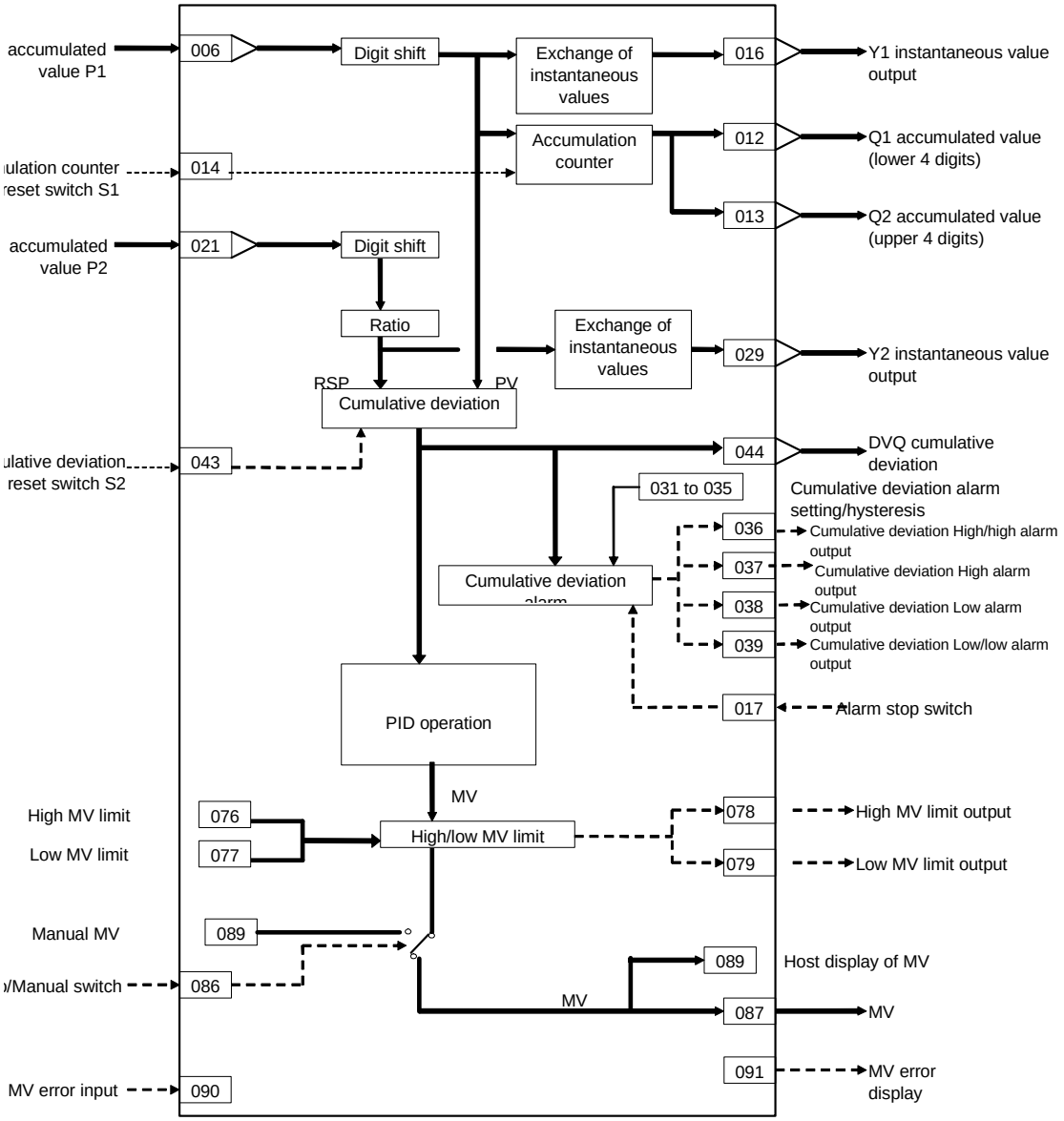

ITEM list

Note The values of ITEMs that cannot be set (indicated as either "-" or "r/w" in the above list) on CX-Process Tool such as the alarm stop switch that were active before the instantaneous power interruption or running of the Loop Control Unit was stopped are cleared when a cold start is performed. When a hot start is performed, these values are held. The internally held values for the standby states in standby sequences that were active before the instantaneous power interruption or running of the Loop Control Unit was stopped are also cleared. When a hot start is performed, these values are held.

*1:On the CX-Process Monitor, the R/W mode is indicated in the Tuning screen or in the Control screen.

ITEM TYPE	ITEM	Symbol	Data Description	Data Range	Default	COLD start initialization	R/W Mode R: Read, W: Write, R/W: R/W-enabled, -: R/W-disabled Note: r and r/w: Read and read/write for validate action or monitor run status by CX-Process Tool or Monitor, (S): Initial setting data, (O): Operation data					Data Length (bytes)
							According to CX-Process Tool	According to CX-Process Monitor *1	According to ITEM Setting block	According to Step Ladder Program	Send/ Receive All Blocks	
Contact input	000		Stop block operation command (0: Cancel stop, 1: Stop)	0, 1	0	–	–	R/W	–	R/W	S/R	1
Parameter	001		Comment	23 characters	Block name	–	R/W(S)	–	–	–	–	24
	002		Block Model: Blended PID	013	013	–	R/W(S)	–	–	–	–	2
Special	003		Execution error display 0: Normal, Other: Error (See Appendix “Execution Error Code List.”)		0000	–	r	–	–	–	S	2
Parameter	004		Operation cycle (sec) 0: Common, 1: 0.1, 2: 0.2, 3: 0.5, 4: 1, 5: 2	0 to 5	0	–	R/W(S)	–	–	–	–	2

PV

*1:On the CX-Process Monitor, the R/W mode is indicated in the Tuning screen or in the Control screen.

ITEM TYPE	ITEM	Symbol	Data Description	Data Range	Default	COLD start initialization	R/W Mode R: Read, W: Write, R/W: R/W-enabled, -: R/W-disabled Note: r and r/w: Read and read/write for validate action or monitor run status by CX-Process Tool or Monitor, (S): Initial setting data, (O): Operation data					Data Length (bytes)
							According to CX-Process Tool	According to CX-Process Monitor *1	According to ITEM Setting block	According to Step Ladder Program	Send/ Receive All Blocks	
Accumulated value input wiring information	006		PV source designation BBB: Block address, III: ITEM No.	BBBIII	000000	–	R/W(S)	–	–	–	–	4
Accumulated value input	007	P1	Input	0 to 9999	0	Yes	r	–	–	–	S	2
Parameter	009		Digit shift (10x, -3: x0.001, -2: x0.01, -1: x0.1, 0: x1, 1: x10)*2	-3 to +1	0	–	R/W(S)	–	–	–	–	1
	010		PV instantaneous value conversion coefficient (number of pulses per second at instantaneous value output 100% is set)	0 to 99999.9999	100.0000	–	R/W(S)	–	–	–	–	4
	011		Number of moving average data at PV instantaneous value conversion	1 to 16	16	–	R/W(S)	–	–	–	–	1
Accumulated value output	012	Q1	Accumulated value (lower 4 digits)	0000 to 9999	0	Yes	r/w	R	–	–	S	2
	013	Q2	Accumulated value (upper 4 digits)	0000 to 9999	0	Yes	r/w	R	–	–	S	2
Contact input	014	S1	Accumulation counter reset switch (1: Reset)	0, 1	0	Yes	R/W(O)	R/W	–	R/W	S/R	1

*1:On the CX-Process Monitor, the R/W mode is indicated in the Tuning screen or in the Control screen.

ITEM TYPE	ITEM	Symbol	Data Description	Data Range	Default	COLD start initialization	R/W Mode R: Read, W: Write, R/W: R/W-enabled, -: R/W-disabled Note: r and r/w: Read and read/write for validate action or monitor run status by CX-Process Tool or Monitor, (S): Initial setting data, (O): Operation data					Data Length (bytes)
							According to CX-Process Tool	According to CX-Process Monitor *1	According to ITEM Setting block	According to Step Ladder Program	Send/ Receive All Blocks	
Parameter	015	PR	Pulse rate (for host display: scale unit/pulse)	0 to 10.000	1.000	–	R/W(S)	–	–	–	–	2
Analog output	016	Y1	Instantaneous value output	0 to 320.00%	0.00	Yes	r/w	–	–	–	S	2
Contact input	017		Alarm stop switch 0: Alarm, 1: Stop	0, 1	0	Yes	R/W(O)	R/W	–	R/W	S/R	1
Parameter	020		Alarm limit *3 0: No, 1: Yes Note: Limits the alarm set value to between 0.00% and 100.00%.	0, 1	0	–	R/W (S)	–	–	–	–	1

*2: When decimal point shift is set to -3 to -1, only integer pulses are used for instantaneous value calculation. Digits past the decimal point are added to the next calculation.

*3: If ITEM 020 (alarm limit) it set to 1 (ON), the alarm set range will be limited to between 0.00% and 100.00% as follows (supported by Loop Control Unit version 2.50 or later):

- If the high MV limit (ITEM 076) is set to a value over 100.00%, the high MV limit output will not turn ON even if the high limit is reached. The high limit function, however, will work.
- If the low MV limit (ITEM 077) is set to a value below 0.00%, the low MV limit output will not turn ON even if the low limit is reached. The low limit function, however, will work.

Setting Value Set Point

*1:On the CX-Process Monitor, the R/W mode is indicated in the Tuning screen or in the Control screen.

ITEM TYPE	ITEM	Symbol	Data Description	Data Range	Default	COLD start initialization	R/W Mode R: Read, W: Write, R/W: R/W-enabled, -: R/W-disabled Note: r and r/w: Read and read/write for validate action or monitor run status by CX-Process Tool or Monitor, (S): Initial setting data, (O): Operation data					Data Length (bytes)
							According to CX-Process Tool	According to CX-Process Monitor *1	According to ITEM Setting block	According to Step Ladder Program	Send/ Receive All Blocks	
Accumulated value input wiring information	021		P2 source designation BBB: Block address, III: ITEM No.	BBBIII	000000	–	R/W(S)	–	–	–	–	4
Accumulated value input	022	P2	Input	0 to 9999	0	Yes	r	–	–	–	–	2
Parameter	024		Digit shift (10x, -3: x0.001, -2: x0.01, -1: x0.1, 0: x1, 1: x10) Note 1	-3 to +1	0	–	R/W(S)	–	–	–	–	1
	025		SP instantaneous value conversion coefficient (number of pulses per second at instantaneous value output 100% is set)	0 to 99999.9999	100.0000	–	R/W(S)	–	–	–	–	4
	026		Number of moving average data at SP instantaneous value conversion	1 to 16	16	–	R/W(S)	–	–	–	–	1
	027	K1	Ratio	0 to 3.2000	1.0000	–	R/W(O)	R/W	W	–	S/R	2
Analog output	029	Y2	Current SP instantaneous value output	0 to 320.00%	0.00	Yes	r/w	R	–	–	S	2
Parameter	031		Cumulative deviation High/high alarm setting	±32000	32000	–	R/W(O)	R/W	W	–	–	2
	032		Cumulative deviation High alarm setting	±32000	32000	–	R/W(O)	R/W	W	–	–	2
Parameter	033		Cumulative deviation Low alarm setting	±32000	-32000	–	R/W(O)	R/W	W	–	–	2
	034		Cumulative deviation Low/low alarm setting	±32000	-32000	–	R/W(O)	R/W	W	–	–	2
	035		Hysteresis setting	0 to 32000	0	–	R/W(S)	–	W	–	–	2

Deviation

*1:On the CX-Process Monitor, the R/W mode is indicated in the Tuning screen or in the Control screen.

ITEM TYPE	ITEM	Symbol	Data Description	Data Range	Default	COLD start initialization	R/W Mode R: Read, W: Write, R/W: R/W-enabled, -: R/W-disabled Note: r and r/w: Read and read/write for validate action or monitor run status by CX-Process Tool or Monitor, (S): Initial setting data, (O): Operation data					Data Length (bytes)
							According to CX-Process Tool	According to CX-Process Monitor *1	According to ITEM Setting block	According to Step Ladder Program	Send/Receive All Blocks	
Contact output	036	HH	Cumulative deviation High/high alarm output	0, 1	0	Yes	–	R	–	R	S	1
	037	H	Cumulative deviation High alarm output	0, 1	0	Yes	–	R	–	R	S	1
	038	L	Cumulative deviation Low alarm output	0, 1	0	Yes	–	R	–	R	S	1
	039	LL	Cumulative deviation Low/low alarm output	0, 1	0	Yes	–	R	–	R	S	1
Parameter	040		Cumulative deviation value normalization constant	1 to 32000	10000	–	R/W(S)	–	W	–	–	2
	041	S3	Operation mode at cumulative deviation High/High and Low/Low alarm 0: Normal, 1: Stop cumulative deviation counter at alarm	0, 1	0	–	R/W(S)	–	–	–	–	1
	042	S4	Cumulative deviation operation mode at Auto start 0: Normal, 1: Reset	0, 1	0	–	R/W(S)	–	–	–	–	1
Contact input	043	S2	Cumulative deviation reset switch	0, 1	0	Yes	R/W(O)	R/W	–	R/W	S/R	1
Analog output	044	DVQ	Cumulative deviation output	±32000	0	Yes	r/w	–	–	–	S	2

Control

*1:On the CX-Process Monitor, the R/W mode is indicated in the Tuning screen or in the Control screen.

ITEM TYPE	ITEM	Symbol	Data Description	Data Range	Default	COLD start initialization	R/W Mode R: Read, W: Write, R/W: R/W-enabled, -: R/W-disabled Note: r and r/w: Read and read/write for validate action or monitor run status by CX-Process Tool or Monitor, (S): Initial setting data, (O): Operation data					Data Length (bytes)
							According to CX-Process Tool	According to CX-Process Monitor *1	According to ITEM Setting block	According to Step Ladder Program	Send/Receive All Blocks	
Parameter	052		Control action 0: Reverse (MV decreases by PV increase.), 1: Direct (MV increases by PV increase.)	0, 1	0	–	R/W(S)	–	–	–	–	1
	054		Proportional band	0.1 to 999.9%	100.0	–	R/W(O)	R/W	W	–	S/R	2
	055		Integral time (0: No integral action)	0 to 9999s	0	–	R/W(O)	R/W	W	–	S/R	2
	056		Differential time (0: No differential action)	0 to 9999s	0	–	R/W(O)	R/W	W	–	S/R	2

MV

*1:On the CX-Process Monitor, the R/W mode is indicated in the Tuning screen or in the Control screen.

ITEM TYPE	ITEM	Symbol	Data Description	Data Range	Default	COLD start initialization	R/W Mode R: Read, W: Write, R/W: R/W-enabled, -: R/W-disabled Note: r and r/w: Read and read/write for validate action or monitor run status by CX-Process Tool or Monitor, (S): Initial setting data, (O): Operation data					Data Length (bytes)
							According to CX-Process Tool	According to CX-Process Monitor *1	According to ITEM Setting block	According to Step Ladder Program	Send/ Receive All Blocks	
Parameter	076		High MV limit	±320.00%	105.00	–	R/W(O)	R/W	W	–	S/R	2
	077		Low MV limit	±320.00%	-5.00	–	R/W(O)	R/W	W	–	S/R	2
Contact output	078	U1	High MV limit output 1: High limit or higher, 0: Lower than limit Valid only for AUTO mode; always 0 for Manual mode.	0, 1	0	Yes	–	R	–	R	S	1
	079	U2	Low MV limit output 1: Low limit or lower, 0: Higher than limit Valid only for AUTO mode; always 0 for Manual mode.	0, 1	0	Yes	–	R	–	R	S	1
Contact input/ parameter	086	A/M	Auto/Manual switch 0: Manual, 1: Auto	0, 1	0	Yes	R/W(O)	R/W	–	R/W	S/R	1
Analog output	087	MV	MV output	±320.00%	0.00	Yes	r/w	–	–	–	–	2
Parameter	088		Inversion of host display of MV 0: Not used, 1: Used Note: "Inversion" changes 0 to 100% range to 100 to 0%.	0, 1	0	–	R/W(S)	–	–	–	–	1
	089		Host display of MV (Auto/Manual switch : Auto, Manual) or Manual MV (Auto/Manual switch : Manual)	±320.00%	0.00	Yes	R/W(O)	R/W	W	–	S/R	2
Connection terminal contact input	090		MV error contact source designation	BBBIII	000000	–	R/W(S)	–	–	–	–	4
Contact output	091	MVE	MV error display 0: Normal, 1: Error	0, 1	0	Yes	–	R	–	R	S	1

Data for host display

*1:On the CX-Process Monitor, the R/W mode is indicated in the Tuning screen or in the Control screen.

ITEM TYPE	ITEM	Symbol	Data Description	Data Range	Default	COLD start initialization	R/W Mode R: Read, W: Write, R/W: R/W-enabled, -: R/W-disabled Note: r and r/w: Read and read/write for validate action or monitor run status by CX-Process Tool or Monitor, (S): Initial setting data, (O): Operation data					Data Length (bytes)
							According to CX-Process Tool	According to CX-Process Monitor *1	According to ITEM Setting block	According to Step Ladder Program	Send/ Receive All Blocks	
Parameter	098		MV index position	-15.00 to +115.00%	0.00	Yes	R/W(O)	R/W	W	–	S/R	2
	099		Label	0 to 15	0	Yes	R/W(O)	R/W	W	–	S/R	2

Note To send data of the Blended PID block to CX-Process Monitor by the Block Send Terminal to Computer blocks (Block Models 403 and 404), set the operation cycle of the Send to Computer blocks to the same or longer than that of the Blended PID block at ITEM004. If the operation cycle of Send to Computer blocks is set to a shorter value, the Set Point momentarily becomes 0 when a cold start is performed.
Bumpless output of MV functions when PID constants are changed in the Blended PID block (Block Model 013).
For this reason, MV is no longer updated and PID control is not executed correctly if variables are written to PID constants at each operation cycle by the Variable ITEM Setting block (Block Model 172).
If this happens, use the Step Ladder Program block (Block Model 301) to provide a time interval for writing by the ITEM Setting block.

List of tag ITEMs on CX-Process Monitor or SCADA software

The following tag ITEMs are used to specify ITEMs with either 1) Monitor tags when sending function blocks to the CX-Process Monitor from 1-Block/4-Block Send Terminal to Computer (Block Model 403/404) or 2) CSV tags from SCADA software when sending/receiving data to/from the CPU Unit using Receive All Blocks (Block Model 461)/Send All Blocks (Block Model 462). All tag ITEMs are fixed and cannot be changed.

ITEM	Data Name	CSV Tags in CX-Process Monitor	CSV Tags in SCADA Software
		Tag ITEM (fixed)	Tag ITEM (fixed)
000	Stop block operation command	MT_ST	MT_ST
003	Execution error display	None	ERR
007	PV input	PV	PV
012	Accumulated value Q1	Q1	Q1
013	Accumulated value Q2	Q2	Q2
014	Accumulation counter reset switch	S1	S1
015	Pulse rate	PR	None
016	Instantaneous value output	Y1	Y1
017	Alarm stop switch	ALM_OFF	AOF
027	Ratio	K1	K1
029	Current SP instantaneous value output	Y2	Y2
036	Cumulative deviation High/high alarm output	DHH	DHH
037	Cumulative deviation High alarm output	DH	DH
038	Cumulative deviation Low alarm output	DL	DL
039	Cumulative deviation Low/low alarm output	DLL	DLL
043	Cumulative deviation reset switch	S2	S2
044	Cumulative deviation output	DEV_Q	DEV_Q
054	Proportional band	P	P
055	Integral time (0: No integral action)	I	I
056	Differential times (0: No differential action)	D	D
076	High MV limit	MH_LMT	MH_LMT
077	Low MV limit	ML_LMT	ML_LMT
078	High MV limit output	MHA	MHA
079	Low MV limit output	MLA	MLA
086	Auto/Manual switch	A/M_SW	A/M_SW
089	Host display of MV (Auto/Manual switch : Auto, Manual) or Manual MV (Auto/Manual switch : Manual)	MV	MV
091	MV error display	MV_ABN	MV_ABN
098	MV index position	MV_IDX	MV_IDX
099	Label	OP_MK	OP_MK

Block Model	Block Name	Block Address
<014>	Batch Flowrate Capture	001 to 032

Outline

This function block functions to open the valve at a fixed opening until a fixed batch accumulated value is reached in batch capture processing to a tank, for example. 4-digit accumulated value signals (batch accumulated values) are input as the PV, and the analog signal (MV value) to the valve controlling the capture volume is gradually increased proportionately to the accumulated value to maintain MV at a fixed value (regular setting). When the fixed value reaches the fixed capture volume (that is, when the accumulated value signals reach the "regular setting - pre-batch setting"), the analog signals (MV value) to the valve controlling the capture volume are gradually decreased to 0% so that the batch accumulated value finally matches the fixed value.

- This function block is provided with a pre-batch function.
- It is also provided with a program MV output function exclusively for batch capture processing.
- It is also provided with a contact output for action timing notification.
- The local SP and remote SP can be set to a fixed preset value (BM).
- The local SP, remote SP, preset value (BM), and batch accumulated value can be set to 8 digits (supported from Loop Control Unit version 2.50).

Note: When a cold start is performed, the accumulated values of operation results that were held before output OFF or before running was stopped are cleared from memory. These values are held when a hot start is performed.

Function block applications

Valve operation in batch capture processing in a tank

Block diagram

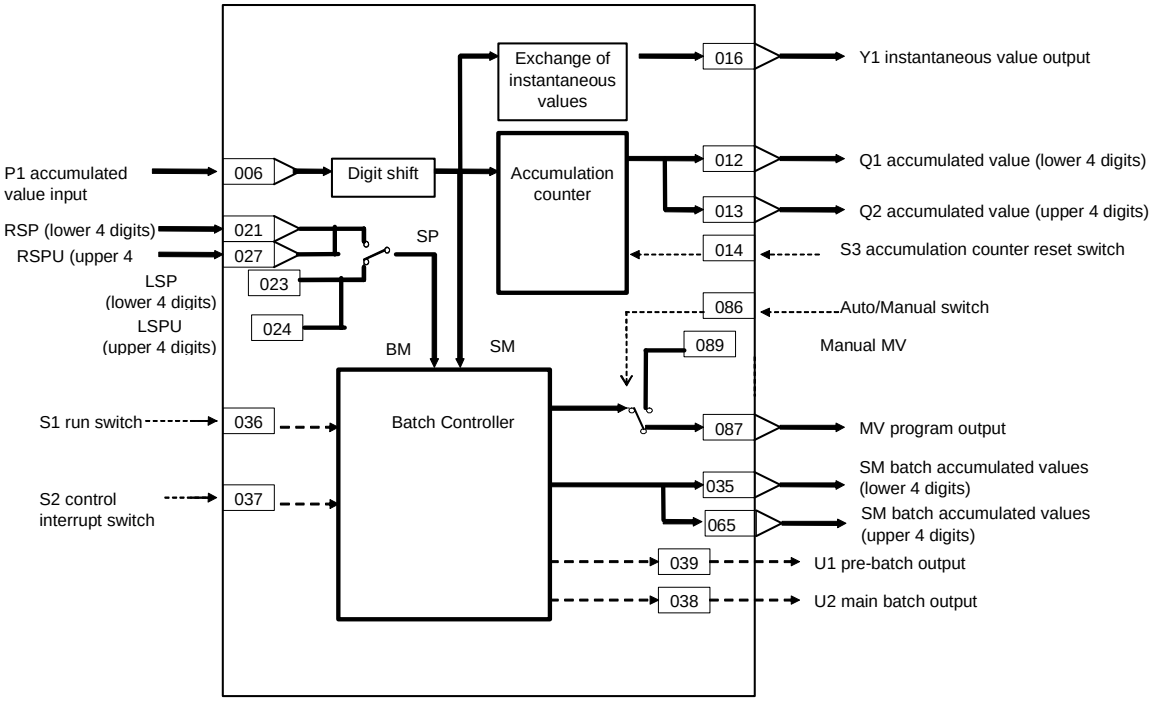

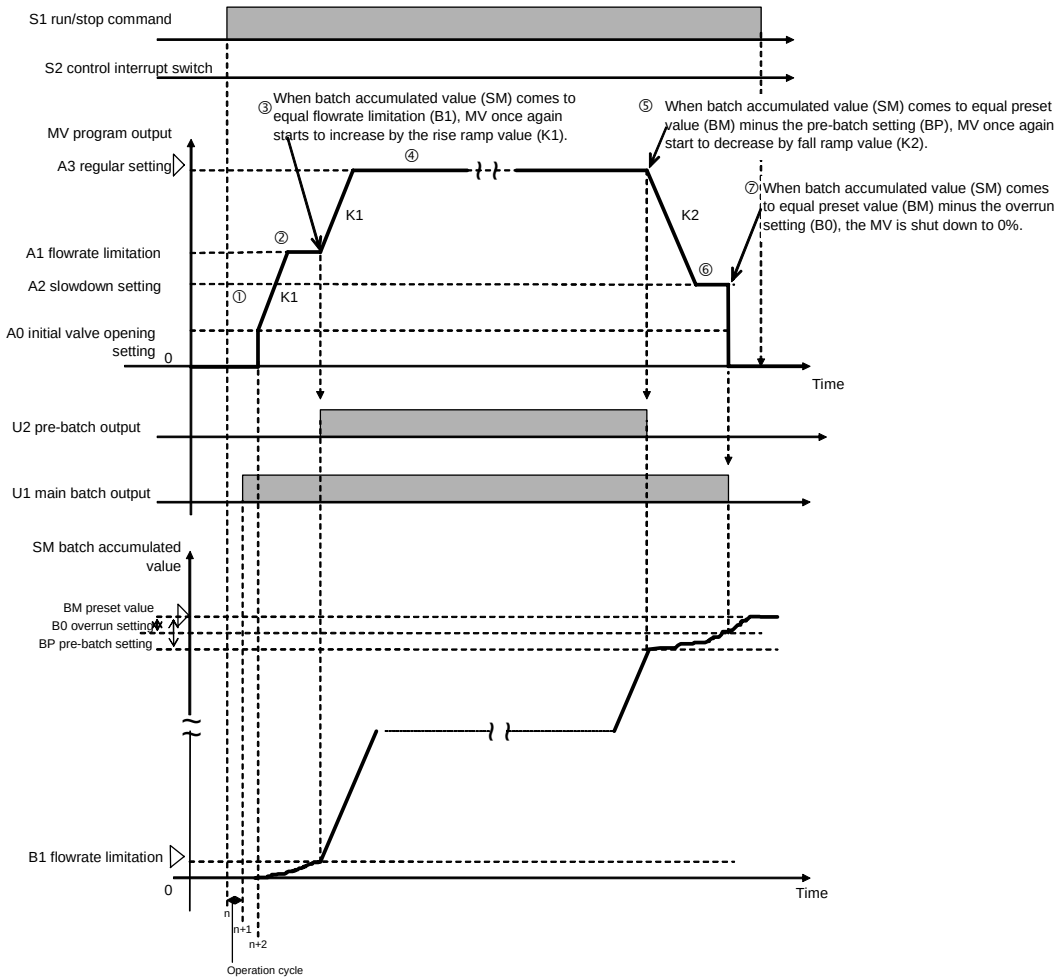

① When S1 run/stop command is set to 1 (ON), capture operation is started. At next operation cycle, U1 contact (main batch output) is set to 1 (ON). At the following operation cycle, the MV value is made to increase from A0 (initial valve opening setting) to K1 (rise rate).

② When MV value reaches A1 (flowrate limitation setting), MV is maintained at that value (opening).

③ When SM (batch accumulated value) reaches BI (flowrate limitation setting), U2 contact (pre-batch output) is set to 1 (ON), and the MV value is made to increase by K1 (rise ramp rate) again.

④ When the MV value reaches A3 (regular setting), MV is maintained at that value (opening), and accumulation (capture) operation is performed.

⑤ When SM (batch accumulated value) reaches "BM (regular setting) - BP (pre-batch setting)", the MV value is made to decrease at K2 (fall ramp rate). At this time, the setting of U2 contact (pre-batch output) changes from 1 (ON) to 0 (OFF).

⑥ When the MV value reaches A2 (slowdown setting), MV is maintained at that value (opening).

⑦ When SM (batch accumulated value) reaches "BM (regular setting) - B0 (overrun setting)", MV is set to 0%. At this time, the setting of U1 contact (main batch output) changes from 1 (ON) to 0 (OFF).

Note: When S2 control interrupt switch is set to 1 (ON) during accumulation (capture) operation, the MV value decreases by K2 (fall ramp rate) until A0 (initial valve setting) until it reaches 0%. At this time, U1 contact (main batch output) and U2 contact (pre-batch output) are set to 0 (OFF). When S2 control interrupt switch is reset to 0 (OFF), the MV value is made to increase from A0 (initial valve setting) by K1 (rise ramp rate), and the state that was active before the interruption is returned to when the MV value reaches A3 (regular setting). At this time, the settings of U1 contact (main batch output) and U2 contact (pre-batch output) return to 1 (ON).

ITEM list

Note When decimal point shift is set to -3 to -1, only integer pulses are used for instantaneous value calculation. Digits past the decimal point are added to the next calculation.

*1:On the CX-Process Monitor, the R/W mode is indicated in the Tuning screen or in the Control screen.

ITEM TYPE	ITEM	Symbol	Data Description	Data Range	Default	COLD start initialization	R/W Mode R: Read, W: Write, R/W: R/W-enabled, -: R/W-disabled Note: r and r/w: Read and read/write for validate action or monitor run status by CX-Process Tool or Monitor, (S): Initial setting data, (O): Operation data					Data Length (bytes)
							According to CX-Process Tool	According to CX-Process Monitor *1	According to ITEM Setting block	According to Step Ladder Program	Send/ Receive All Blocks	
Contact input	000		Stop block operation command (0: Cancel stop, 1: Stop)	0, 1	0	–	–	R/W	–	–	S/R	1
Parameter	001		Comment	23 characters	Block name	–	R/W(S)	–	–	–	–	24
	002		Block Model: Batch Flowrate Capture	014	014	–	R/W(S)	–	–	–	–	2
Special	003		Execution error display 0: Normal, Other: Error (See Appendix “Execution Error Code List.”)		0000	–	r	–	–	–	S	2
Parameter	004		Operation cycle (sec) 0: Common, 1: 0.1, 2: 0.2, 3: 0.5, 4: 1, 5: 2	0 to 5	0	–	R/W(S)	–	–	–	–	2

Accumulated value input P1

*1:On the CX-Process Monitor, the R/W mode is indicated in the Tuning screen or in the Control screen.

ITEM TYPE	ITEM	Symbol	Data Description	Data Range	Default	COLD start initialization	R/W Mode R: Read, W: Write, R/W: R/W-enabled, -: R/W-disabled Note: r and r/w: Read and read/write for validate action or monitor run status by CX-Process Tool or Monitor, (S): Initial setting data, (O): Operation data					Data Length (bytes)
							According to CX-Process Tool	According to CX-Process Monitor *1	According to ITEM Setting block	According to Step Ladder Program	Send/ Receive All Blocks	
Accumulated value input connection information	006		P1 source designation BBB: Block address, III: ITEM No.	BBBIII	000000	–	R/W(S)	–	–	–	–	4
Accumulated value input	007	P1	Input	0 to 9999	0	Yes	–	–	–	–	S	2
Parameter	009		Digit shift (10 x, -3: x0.001, -2: x0.01, -1: x0.1, 0: x1, 1: x10) (Note 1)	-3 to +1	0	–	R/W(S)	–	–	–	–	1
	010		Instantaneous value conversion coefficient (number of pulses per second at instantaneous value output 100% is set)	0 to 99999.9999	1.0000	–	R/W(S)	–	–	–	–	4
	011		Number of moving average data at instantaneous value conversion	1 to 16	16	–	R/W(S)	–	–	–	–	1
Accumu-lated value output	012	Q1	Accumulated value (lower 4 digits)	0000 to 9999	0	Yes	r/w	R	–	–	S	2
	013	Q2	Accumulated value (upper 4 digits)	0000 to 9999	0	Yes	r/w	R	–	–	S	2
Contact input	014	S3	Accumulation counter reset switch (1: Reset)	0, 1	0	Yes	R/W(O)	R/W	–	R/W	S/R	1
Analog output	016	Y1	Instantaneous value output	0 to 320.00%	0.00	Yes	r/w	R	–	–	S	2
Parameter	017		Pulse rate (for host display: scale unit/pulse)	0 to 10.000	1.000	–	R/W(S)	–	–	–	S/R	2

Setting Value Set Point

*1:On the CX-Process Monitor, the R/W mode is indicated in the Tuning screen or in the Control screen.

ITEM TYPE	ITEM	Symbol	Data Description	Data Range	Default	COLD start initialization	R/W Mode R: Read, W: Write, R/W: R/W-enabled, -: R/W-disabled Note: r and r/w: Read and read/write for validate action or monitor run status by CX-Process Tool or Monitor, (S): Initial setting data, (O): Operation data					Data Length (bytes)
							According to CX-Process Tool	According to CX-Process Monitor *1	According to ITEM Setting block	According to Step Ladder Program	Send/ Receive All Blocks	
Analog input connection information	021		Remote SP source designation BBB: Block address, III: ITEM No.	BBBIII	000000	–	R/W(S)	–	–	–	–	4
Analog input	022	RSP	Remote SP input (lower 4 digits)	0 to 9999	0	Yes	–	–	–	–	–	2
Parameter	023		Local SP setting (lower 4 digits)	0 to 9999	0	–	R/W(O)	W	W	–	R	1
	024*2		Local SP setting (upper 4 digits)	0 to 9999	0	–	R/W (O)	W	W	–	R	2
Contact input/ parameter	026	R/L	Remote/Local switching 0: Local, 1: Remote	0, 1	0	Yes	R/W(O)	R/W	–	R/W	S/R	1
Analog input connection information	027*2		Remote SP source designation BBB: Block address, III: ITEM No.	BBBIII	00000	–	R/W (S)	–	–	–	–	4
Analog input	028*2	RSPU	Remote SP input (upper 4 digits)	0 to 9999	0	Yes	–	–	–	–	–	2
Accumulated value output	029	CSP	Current SP output (lower 4 digits)	0 to 9999	0	Yes	r/w	R	–	–	S	2
Parameter	030*2	CSPU	Current SP output (upper 4 digits)	0 to 9999	0	Yes	r/w	R	–	–	S	2

*2: These ITEMs were added in Loop Control Unit Ver. 2.50.

Batch controller (lower 4 digits)

*1:On the CX-Process Monitor, the R/W mode is indicated in the Tuning screen or in the Control screen.

ITEM TYPE	ITEM	Symbol	Data Description	Data Range	Default	COLD start initialization	R/W Mode R: Read, W: Write, R/W: R/W-enabled, -: R/W-disabled Note: r and r/w: Read and read/write for validate action or monitor run status by CX-Process Tool or Monitor, (S): Initial setting data, (O): Operation data					Data Length (bytes)
							According to CX-Process Tool	According to CX-Process Monitor *1	According to ITEM Setting block	According to Step Ladder Program	Send/ Receive All Blocks	
Parameter	031		Preset value (lower 4 digits, current SP is entered)	0 to 9999	9999	Yes	Yes	Yes	–	–	S	2
	032		Overrun setting (value subtracted from BM)	0 to 9999	0	–	–	–	W	–	S/R	2
	033		Pre-batch setting (value subtracted from BM)	0 to 9999	0	–	–	–	W	–	S/R	2
	034		Flowrate limitation	0 to 9999	0	–	–	–	W	–	S/R	2
Analog output	035	SM	Batch accumulated value (lower 4 digits)	0000 to 9999	0	Yes	Yes	Yes	W	–	S	2
Contact input	036	S1	Run/stop command (0: Reset, 1: Run)	0, 1	0	Yes	Yes	Yes	–	R/W	S/R	1
	037	S2	Control interrupt switch (1: Interrupt)	0, 1	0	Yes	Yes	Yes	–	R/W	S/R	1
Contact output	038	U1	Main batch output	0, 1	0	Yes	Yes	Yes	–	R	S	1
	039	U2	Pre-batch output	0, 1	0	Yes	Yes	Yes	–	R	S	1

Program output

*1:On the CX-Process Monitor, the R/W mode is indicated in the Tuning screen or in the Control screen.

ITEM TYPE	ITEM	Symbol	Data Description	Data Range	Default	COLD start initialization	R/W Mode R: Read, W: Write, R/W: R/W-enabled, -: R/W-disabled Note: r and r/w: Read and read/write for validate action or monitor run status by CX-Process Tool or Monitor, (S): Initial setting data, (O): Operation data					Data Length (bytes)
							According to CX-Process Tool	According to CX-Process Monitor *1	According to ITEM Setting block	According to Step Ladder Program	Send/ Receive All Blocks	
Parameter	041	A0	Initial valve opening setting	0 to 320.00 %	0.00	–	R/W(O)	–	–	–	–	2
	042	A1	Flowrate limitation setting	0 to 320.00 %	10.00	–	R/W(O)	–	–	–	–	2
	043	A2	Slowdown setting	0 to 320.00 %	10.00	–	R/W(O)	–	–	–	–	2
	044	A3	Regular setting	0 to 320.00 %	30.00	–	R/W(O)	–	–	–	–	2
	045	K1	Rise ramp value	0 to 320.00 %/s	1.00	–	R/W(O)	–	–	–	–	2
	046	K2	Fall ramp value	0 to 320.00 %/s	1.00	–	R/W(S)	–	–	–	–	2

Batch controller (upper 4 digits)

*1:On the CX-Process Monitor, the R/W mode is indicated in the Tuning screen or in the Control screen.

ITEM TYPE	ITEM	Symbol	Data Description	Data Range	Default	COLD start initialization	R/W Mode R: Read, W: Write, R/W: R/W-enabled, -: R/W-disabled Note: r and r/w: Read and read/write for validate action or monitor run status by CX-Process Tool or Monitor, (S): Initial setting data, (O): Operation data					Data Length (bytes)
							According to CX-Process Tool	According to CX-Process Monitor *1	According to ITEM Setting block	According to Step Ladder Program	Send/ Receive All Blocks	
Parameter	061*3		Preset value (upper 4 digits, current SP is entered)	0 to 9999	0	Yes	R	–	–	–	S	2
Analog output	065*3	SMU	Batch accumulated value (upper 4 digits)	0 to 9999	0	Yes	r/w	R	W	–	S	2
Contact input/ parameter	086	A/M	Auto/Manual switch 0:Manual, 1:Auto	0, 1	0	Yes	R/W(O)	R/W	–	R/W	S/R	1
Analog output	087	MV	Program output	±320.00 %	0	Yes	r/w	–	–	–	–	2
Parameter	088		Inversion of host display of MV 0: Not used, 1: Used Note: “Inversion” changes 0 to 100% range to 100 to 0%.	0, 1	0	–	R/W(S)	–	–	–	–	1
	089		Host display of MV	±320.00 %	0.00	Yes	R/W(O)	R/W	–	–	S/R	2
Source designationcontact input	090*2		MV error contact source designation	BBBIII	000000	–	R/W(S)	–	–	–	–	4
Contact output	091*2	MVE	MV Error Display 0: Normal, 1: Error	0, 1	0	Yes	–	R	–	R	S	1

*2: These ITEMs were added in Loop Control Unit Ver. 2.00.

*3: These ITEMs were added in Loop Control Unit Ver. 2.50.

Data for host display

*1:On the CX-Process Monitor, the R/W mode is indicated in the Tuning screen or in the Control screen.

ITEM TYPE	ITEM	Symbol	Data Description	Data Range	Default	COLD start initialization	R/W Mode R: Read, W: Write, R/W: R/W-enabled, -: R/W-disabled Note: r and r/w: Read and read/write for validate action or monitor run status by CX-Process Tool or Monitor, (S): Initial setting data, (O): Operation data					Data Length (bytes)
							According to CX-Process Tool	According to CX-Process Monitor *1	According to ITEM Setting block	According to Step Ladder Program	Send/ Receive All Blocks	
Parameter	098		MV index position	-15.00 to 115.00 %	0.00	Yes	R/W(O)	R/W	–	–	S/R	2
	099		Label	0 to 15	0	Yes	R/W(O)	R/W	–	–	S/R	2

List of tag ITEMs on CX-Process Monitor or SCADA software

The following tag ITEMs are used to specify ITEMs with either 1) Monitor tags when sending function blocks to the CX-Process Monitor from 1-Block/4-Block Send Terminal to Computer (Block Model 403/404) or 2) CSV tags from SCADA software when sending/receiving data to/from the CPU Unit using Receive All Blocks (Block Model 461)/Send All Blocks (Block Model 462). All tag ITEMs are fixed and cannot be changed.

ITEM	Data Name	CSV Tags in CX-Process Monitor	CSV Tags in SCADA Software
		Tag ITEM (fixed)	Tag ITEM (fixed)
000	Stop block operation command	MT_ST	MT_ST
003	Execution error display	None	ERR
007	Input	P1	P1
012	Accumulated value (lower 4 digits)	Q1	Q1
013	Accumulated value (upper 4 digits)	Q2	Q2
014	Accumulation counter reset switch	S3	S3
016	Instantaneous value output	Y1	Y1
017	Pulse rate (for host display: scale unit/pulse)	PR	PR
023	Local Set Point setting (lower 4 digits)	None	SP
024	Local Set Point setting (upper 4 digits)	None	SPU_W
026	Remote/Local switch	R/L_SW	R/L_SW
029	Current Set Point output (lower 4 digits)	SP	SP
030	Current Set Point output (upper 4 digits)	SPU	SPU
031	Preset value (lower 4 digits)	None	BM
032	Overrun setting (value subtracted from BM)	B0	B0
033	Pre-batch setting (value subtracted from BM)	BP	BP
034	Flowrate limitation	B1	B1
035	Batch accumulated value (lower 4 digits)	SM	SM
036	Run/stop command	S1	S1
037	Control interrupt switch	S2	S2
038	Main batch output	U1	U1
039	Pre-batch output	U2	U2
061	Preset value (upper 4 digits)	None	BMU
065	Batch accumulated value (upper 4 digits)	SMU	SMU
086	Auto/Manual switch	A/M_SW	A/M_SW
089	Host display of MV	MV	MV
091	MV error display	MV_ABN	MV_ABN
098	MV index position	MV_IDX	MV_IDX
099	Label	OP_MK	OP_MK

Note Note that this function block cannot be sent by the 4-Block Send Terminal to Computer block (Block Model 404).

Block Model	Block Name	Block Address
<016>	Fuzzy Logic	001 to 032

Outline

This function block outputs up to two analog outputs based on fuzzy logic performed on up to 8 analog inputs, X1 to X8.
Using fuzzy logic enables applying the Loop Control Unit to control applications using the knowledge of experienced workers expressed as ambiguous expressions, such as "a little" or "quite a lot."
The membership functions of a Fuzzy Logic block can be displayed as graphs on version 2.50 or later of the CX-Process Tool.

The specifications of the Fuzzy Logic block are as follows:
•I/O: 8 inputs and 2 outputs
•Rule format: 8 conditions and 2 conclusions
•Number of rules: 64 max.
•Five labels (NL, NS, ZR, PS, and PL)
•Inference method: Max.-Min. logical ANDs
•Deterministic output calculations: Center of gravity
•Output when rules not fulfilled: Constant or previous value (selectable)

The specifications fo the membership functions are as follows:
Conditions
•Resolution: 64, 000 max.
•Continuous functions: 4 inflection points max. (S, Z, Λ, and Π)
•Height: 0 or 10, 000

Conclusions
•Resolution: 64, 000 max.
•Height: Always 10, 000

Function block applications

•Controlling systems with excessive external interference.
•Replacing an OMRON C200H-FZ001 Fuzzy Logic Unit.

Block Diagram

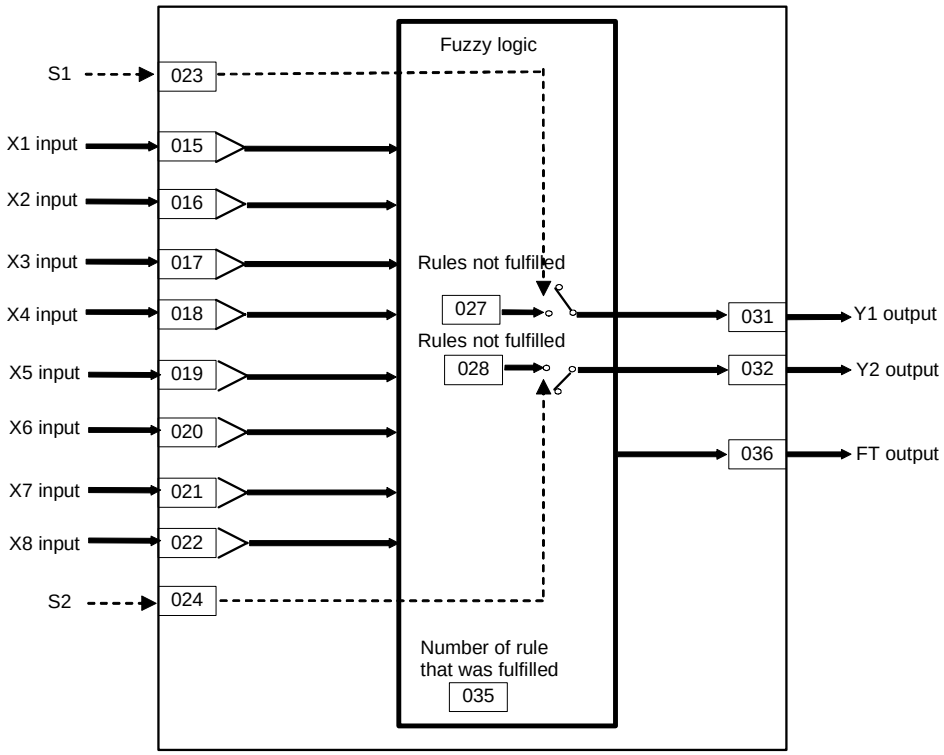

ITEM list

*1:On the CX-Process Monitor, the R/W mode is indicated in the Tuning screen or in the Control screen.

ITEM TYPE	ITEM	Symbol	Data Description	Data Range	Default	COLD start initialization	R/W Mode R: Read, W: Write, R/W: R/W-enabled, -: R/W-disabled Note: r and r/w: Read and read/write for validate action or monitor run status by CX-Process Tool or Monitor, (S): Initial setting data, (O): Operation data					Data Length (bytes)
							According to CX-Process Tool	According to CX-Process Monitor *1	According to ITEM Setting block	According to Step Ladder Program	Send/ Receive All Blocks	
Contact input	000		Stop block operation command (0: Cancel stop, 1: Stop)	0, 1	0	–	–	R/W	–	–	S/R	1
Parameter	001		Comment	23 characters	Block name	–	R/W (S)	–	–	–	–	24
	002		Block Model: Fuzzy Logic	016	016	–	R/W (S)	–	–	–	–	2
Special	003		Execution error display 0: Normal, Other: Error (See Appendix "Execution Error Code List.")		0000	–	r	–	–	–	S	2
Parameter	004		Operation cycle (sec) 0: Common, 1: 0.1, 2: 0.2, 3: 0.5, 4: 1, 5: 2	0 to 5	0	–	R/W (S)	–	–	–	–	2
Special	006		Operation error details Indicates the ITEM number when execution error 19 occurs.	41 to 90 101 to 164	0	Yes	–	–	–	–	–	2

Measured PVs

*1:On the CX-Process Monitor, the R/W mode is indicated in the Tuning screen or in the Control screen.

ITEM TYPE	ITEM	Symbol	Data Description	Data Range	Default	COLD start initialization	R/W Mode R: Read, W: Write, R/W: R/W-enabled, -: R/W-disabled Note: r and r/w: Read and read/write for validate action or monitor run status by CX-Process Tool or Monitor, (S): Initial setting data, (O): Operation data					Data Length (bytes)
							According to CX-Process Tool	According to CX-Process Monitor *1	According to ITEM Setting block	According to Step Ladder Program	Send/ Receive All Blocks	
Analog input wiring information	007		X1 source designation BBB: Block address, III: ITEM No.	BBBIII	000000	–	R/W (S)	–	–	–	–	4
	008		X2 source designation BBB: Block address, III: ITEM No.	BBBIII	000000	–	R/W (S)	–	–	–	–	4
	009		X3 source designation BBB: Block address, III: ITEM No.	BBBIII	000000	–	R/W (S)	–	–	–	–	4
	010		X4 source designation BBB: Block address, III: ITEM No.	BBBIII	000000	–	R/W (S)	–	–	–	–	4
	011		X5 source designation BBB: Block address, III: ITEM No.	BBBIII	000000	–	R/W (S)	–	–	–	–	4
	012		X6 source designation BBB: Block address, III: ITEM No.	BBBIII	000000	–	R/W (S)	–	–	–	–	4
	013		X7 source designation BBB: Block address, III: ITEM No.	BBBIII	000000	–	R/W (S)	–	–	–	–	4
	014		X8 source designation BBB: Block address, III: ITEM No.	BBBIII	000000	–	R/W (S)	–	–	–	–	4
Analog inputs	015	X1	X1 input value	±32000	0	Yes	r	R	–	–	S	2
	016	X2	X2 input value	±32000	0	–	r	R	–	–	S	2
	017	X3	X3 input value	±32000	0	–	r	R	–	–	S	2
	018	X4	X4 input value	±32000	0	–	r	R	–	–	S	2
	019	X5	X5 input value	±32000	0	–	r	R	–	–	S	2
	020	X6	X6 input value	±32000	0	–	r	R	–	–	S	2
	021	X7	X7 input value	±32000	0	–	r	R	–	–	S	2
	022	X8	X8 input value	±32000	0	Yes	r	R	–	–	S	2

Outputs when rules are not fulfilled

*1:On the CX-Process Monitor, the R/W mode is indicated in the Tuning screen or in the Control screen.

ITEM TYPE	ITEM	Symbol	Data Description	Data Range	Default	COLD start initialization	R/W Mode R: Read, W: Write, R/W: R/W-enabled, -: R/W-disabled Note: r and r/w: Read and read/write for validate action or monitor run status by CX-Process Tool or Monitor, (S): Initial setting data, (O): Operation data					Data Length (bytes)
							According to CX-Process Tool	According to CX-Process Monitor *1	According to ITEM Setting block	According to Step Ladder Program	Send/ Receive All Blocks	
Contact input parameter	023	S1	Output value selection switch for output 1 when rules are not fulfilled 0: Maintain previous, 1: Fixed value	0, 1	0	–	R/W (O)	–	W	R/W	S/R	1
	024	S2	Output value selection switch for output 2 when rules are not fulfilled 0: Maintain previous, 1: Fixed value	0, 1	0	–	R/W (O)	–	W	R/W	S/R	1
Parameter	027	A1	Fixed value for output 1 when rules are not fulfilled	±32000	0	–	R/W (O)	–	W	–	S/R	2
	028	A2	Fixed value for output 2 when rules are not fulfilled	±32000	0	–	R/W (O)	–	W	–	S/R	2

Output values: MV

*1:On the CX-Process Monitor, the R/W mode is indicated in the Tuning screen or in the Control screen.

ITEM TYPE	ITEM	Symbol	Data Description	Data Range	Default	COLD start initialization	R/W Mode R: Read, W: Write, R/W: R/W-enabled, -: R/W-disabled Note: r and r/w: Read and read/write for validate action or monitor run status by CX-Process Tool or Monitor, (S): Initial setting data, (O): Operation data					Data Length (bytes)
							According to CX-Process Tool	According to CX-Process Monitor *1	According to ITEM Setting block	According to Step Ladder Program	Send/ Receive All Blocks	
Analog outputs	031	Y1	Y1 output value	±32000	0	Yes	r	R	W	–	S	2
	032	Y2	Y2 output value	±32000	0	Yes	r	R	W	–	S	2
Parameter	035	FN	Read rule numbers for fulfilled rules	1 to 64	1		R/W (O)	–	W	–	S/R	2
Analog outputs	036	FT	Applicability for each rule Applicability for rules specified in ITEM 035	0 to 10000	0	Yes	–	–	W	–	S	2

Condition membership functions

ITEM TYPE	ITEM	Symbol	Data Description	Data Range	Default	R/W Mode R: Read, W: Write, R/W: R/W-enabled, –: R/W-disabled Note: r and r/w: Read and read/write for validate action or monitor run status by CX-Process Tool or Monitor, (S) : Initial setting data, (O) : Operation data					Data Length (bytes)
						According to CX-Process Tool	According to CX-Process Monitor *1	According to ITEM Setting block	According to Step Ladder Program	Send/ Receive All Blocks	
Parameters	•Input 1, Separate horizontal coordinates with colon to specify.										
	041		Input 1 NL	20 characters max.	–	R/W (O)	–	–	–	–	21
	042		Input 1 NS	27 characters max.	–	R/W (O)	–	–	–	–	28
	043		Input 1 ZR	27 characters max.	–	R/W (O)	–	–	–	–	28
	044		Input 1 PS	27 characters max.	–	R/W (O)	–	–	–	–	28
	045		Input 1 PL	20 characters max.	–	R/W (O)	–	–	–	–	21
	•Input 2, Separate horizontal coordinates with colon to specify.										
	046		Input 2 NL	20 characters max.	–	R/W (O)	–	–	–	–	21
	047		Input 2 NS	27 characters max.	–	R/W (O)	–	–	–	–	28
	048		Input 2 ZR	27 characters max.	–	R/W (O)	–	–	–	–	28
	049		Input 2 PS	27 characters max.	–	R/W (O)	–	–	–	–	28
	050		Input 2 PL	20 characters max.	–	R/W (O)	–	–	–	–	21
	•Input 3, Separate horizontal coordinates with colon to specify.										
	051		Input 3 NL	20 characters max.	–	R/W (O)	–	–	–	–	21
	052		Input 3 NS	27 characters max.	–	R/W (O)	–	–	–	–	28
	053		Input 3 ZR	27 characters max.	–	R/W (O)	–	–	–	–	28
	054		Input 3 PS	27 characters max.	–	R/W (O)	–	–	–	–	28
	055		Input 3 PL	20 characters max.	–	R/W (O)	–	–	–	–	21
	•Input 4, Separate horizontal coordinates with colon to specify.										
	056		Input 4 NL	20 characters max.	–	R/W (O)	–	–	–	–	21
	057		Input 4 NS	27 characters max.	–	R/W (O)	–	–	–	–	28
	058		Input 4 ZR	27 characters max.	–	R/W (O)	–	–	–	–	28
	059		Input 4 PS	27 characters max.	–	R/W (O)	–	–	–	–	28
	060		Input 4 PL	20 characters max.	–	R/W (O)	–	–	–	–	21
	•Input 5, Separate horizontal coordinates with colon to specify.										
	061		Output 5 NL	20 characters max.	–	R/W (O)	–	–	–	–	21
	062		Output 5 NS	27 characters max.	–	R/W (O)	–	–	–	–	28
	063		Output 5 ZR	27 characters max.	–	R/W (O)	–	–	–	–	28
	064		Output 5 PS	27 characters max.	–	R/W (O)	–	–	–	–	28
	065		Output 5 PL	20 characters max.	–	R/W (O)	–	–	–	–	21
	•Input 6, Separate horizontal coordinates with colon to specify.										
	066		Output 6 NL	20 characters max.	–	R/W (O)	–	–	–	–	21
	067		Output 6 NS	27 characters max.	–	R/W (O)	–	–	–	–	28
	068		Output 6 ZR	27 characters max.	–	R/W (O)	–	–	–	–	28
	069		Output 6 PS	27 characters max.	–	R/W (O)	–	–	–	–	28
	070		Output 6 PL	20 characters max.	–	R/W (O)	–	–	–	–	21
Parameters	•Input 7, Separate horizontal coordinates with colon to specify.										
	071		Output 7 NL	20 characters max.	–	R/W (O)	–	–	–	–	21
	072		Output 7 NS	27 characters max.	–	R/W (O)	–	–	–	–	28
	073		Output 7 ZR	27 characters max.	–	R/W (O)	–	–	–	–	28

ITEM TYPE	ITEM	Symbol	Data Description	Data Range	Default	R/W Mode R: Read, W: Write, R/W: R/W-enabled, –: R/W-disabled Note: r and r/w: Read and read/write for validate action or monitor run status by CX-Process Tool or Monitor, (S) : Initial setting data, (O) : Operation data					Data Length (bytes)
						According to CX-Process Tool	According to CX-Process Monitor *1	According to ITEM Setting block	According to Step Ladder Program	Send/ Receive All Blocks	
	074		Output 7 PS	27 characters max.	–	R/W (O)	–	–	–	–	28
	075		Output 7 PL	20 characters max.	–	R/W (O)	–	–	–	–	21
	•Input 8, Separate horizontal coordinates with colon to specify.										
	076		Output 8 NL	20 characters max.	–	R/W (O)	–	–	–	–	21
	077		Output 8 NS	27 characters max.	–	R/W (O)	–	–	–	–	28
	078		Output 8 ZR	27 characters max.	–	R/W (O)	–	–	–	–	28
	079		Output 8 PS	27 characters max.	–	R/W (O)	–	–	–	–	28
	080		Output 8 PL	20 characters max.	–	R/W (O)	–	–	–	–	21

Conclusion membership functions

ITEM TYPE	ITEM	Symbol	Data Description	Data Range	Default	R/W Mode R: Read, W: Write, R/W: R/W-enabled, –: R/W-disabled Note: r and r/w: Read and read/write for validate action or monitor run status by CX-Process Tool or Monitor, (S) : Initial setting data, (O) : Operation data					Data Length (bytes)
						According to CX-Process Tool	According to CX-Process Monitor *1	According to ITEM Setting block	According to Step Ladder Program	Send/ Receive All Blocks	
Parameters	•Output 1, Specify horizontal axis.										
	081		Output 1 NL	6 characters max.	–	R/W (O)	–	–	–	–	7
	082		Output 1 NS	6 characters max.	–	R/W (O)	–	–	–	–	7
	083		Output 1 ZR	6 characters max.	–	R/W (O)	–	–	–	–	7
	084		Output 1 PS	6 characters max.	–	R/W (O)	–	–	–	–	7
	085		Output 1 PL	6 characters max.	–	R/W (O)	–	–	–	–	7
	•Output 2, Specify horizontal axis.										
	086		Output 2 NL	6 characters max.	–	R/W (O)	–	–	–	–	7
	087		Output 2 NS	6 characters max.	–	R/W (O)	–	–	–	–	7
	088		Output 2 ZR	6 characters max.	–	R/W (O)	–	–	–	–	7
	089		Output 2 PS	6 characters max.	–	R/W (O)	–	–	–	–	7
	090		Output 2 PL	6 characters max.	–	R/W (O)	–	–	–	–	7

Rules:

IF Input 1=**: Input 2=**: Input 3=**: Input 4=**: Input 5=**: Input 6=**: Input 7=**: Input 8=** THEN Output 1=**: Output 2=**

*1:On the CX-Process Monitor, the R/W mode is indicated in the Tuning screen or in the Control screen.

ITEM TYPE	ITEM	Symbol	Data Description	Data Range	Default	COLD start initialization	R/W Mode R: Read, W: Write, R/W: R/W-enabled, -: R/W-disabled Note: r and r/w: Read and read/write for validate action or monitor run status by CX-Process Tool or Monitor, (S): Initial setting data, (O): Operation data					Data Length (bytes)
							According to CX-Process Tool	According to CX-Process Monitor *1	According to ITEM Setting block	According to Step Ladder Program	Send/ Receive All Blocks	
Parameters	101		Rule 1	29 characters max.		–	R/W (O)	–	–	–	–	30
	102		Rule 2	29 characters max.		–	R/W (O)	–	–	–	–	30
	to		to			–						
	164		Rule 64	29 characters max.		–	R/W (O)	–	–	–	–	30

List of tag ITEMs on CX-Process Monitor or SCADA software

The following tag ITEMs are used to specify ITEMs with either 1) Monitor tags when sending function blocks to the CX-Process Monitor from 1-Block/4-Block Send Terminal to Computer (Block Model 403/404) or 2) CSV tags from SCADA software when sending/receiving data to/from the CPU Unit using Receive All Blocks (Block Model 461) /Send All Blocks (Block Model 462). All tag ITEMs are fixed and cannot be changed.

ITEM	Data Name	CSV Tags in CX-Process Monitor	CSV Tags in SCADA Software
		Tag ITEM (fixed)	Tag ITEM (fixed)
000	Stop block operation command	MT_ST	MT_ST
003	Execution error display		ERR
015	X1 input value	X1	X1
016	X2 input value	X2	X2
017	X3 input value	X3	X3
018	X4 input value	X4	X4
019	X5 input value	X5	X5
020	X6 input value	X6	X6
021	X7 input value	X7	X7
022	X8 input value	X8	X8
023	Output value selection switch for output 1 when rules are not fulfilled		S1
024	Output value selection switch for output 2 when rules are not fulfilled		S2
027	Fixed value for output 1 when rules are not fulfilled		A1
028	Fixed value for output 2 when rules are not fulfilled		A2
031	Y1Output value	Y1	Y1
032	Y2Output value	Y2	Y2
035	Read rule numbers for fulfilled rules	FN	FN
036	Applicability for each rule	FT	FT

Setting fuzzy logic parameters

Rules

Rules express experience and know-how in IF-THEN statements. For example, IF (you're close to the car in front of you) & (you're going very fast) THEN (you have to step on the brake very hard).
Up to 8 conditions can be set for inputs X1 to X8, and up to two conclusions can be set for outputs Y1 and Y2.
Rules 1 to 64 can be set for ITEM 101 to ITEM 164. The following elements are specified for each rule.

1. Conditions

The labels that will be used for inputs X1 to X8 are listed in order separated by colons. For example, if label NS is used for input X1 and labels ZR, PL, PL, NS, ZR, PL, and PL are likewise used for inputs X2, X3, X4, X5, X6, X7, and X8, then NS:ZR:PL:PL:NS:ZR:PL:PL is specified.

Note: Labels are used to express conditions for the above rules for some applications, for example "close, " "very fast, " and "very hard" in the above example. The following 5 labels can be used in a Fuzzy Logic block.
NL: Negative Large
NS: Negative Small
ZR: Approximately Zero
PS: Positive Small
PL: Positive Large

2. Conclusions

The labels that will be used for outputs Y1 and Y2 are listed in order separated by colons. For example, if ZR is used for output Y1 and PL is used for output Y2, then ZR:PL is specified

•A slash is placed between the conditions and conclusions. For example, the above rule would be specified as follows:
NS:ZR:PL:PL:NS:ZR:PL:PL/ZR:PL

Set a hyphen for inputs or outputs for which labels are not set. For example, to set ZR for input X2, ZR and input X4, and PL for output Y2, then the rule "IF (Input X1 is NL and Input X2 is PL), THEN (Output Y1 is ZR)" would be specified as follows for ITEM 101:
NL:PL:-:-:-:-:-:-/ZR:-
Execution error 19 will occur if this standard is not followed.

Membership functions

Membership function must be set for each rule that is being used. Membership functions determine the applicability of a status to the labels set for inputs and outputs. There are membership functions for both conditions and for conclusions.
There are four typical membership functions for conditions: S, Z, Λ, and Π. These are specified by the inflection points for the labels.

Membership functions are set as follows:

1. Membership functions for conditions

Condition membership functions can be set for up to 5 labels for inputs X1 to X8.
The inflection points for each input, X1 to X8, for the labels NL, NS, ZR, PS, and PL are set in ITEM 041 to ITEM 080 as values along the X axis. (Up to 40 settings are possible, i.e., 8 inputs x 5 labels.)

Note1: There can be two or three inflection points for the membership functions for labels NL and PL. For labels NS, ZR, and PS, there can be three or four inflection points. Execution error 19 will occur if more than two values are the same.

Note 2: Values along the X axis have 1 sign character and up to 5 numeric characters. (Execution error 19 will occur is a + sign is attached.) Leading zeros may be entered or omitted (e.g., either 50 or 050 is acceptable.) Values are separated by colons.

NL

Three X coordinates
Example) 0:1000:2300

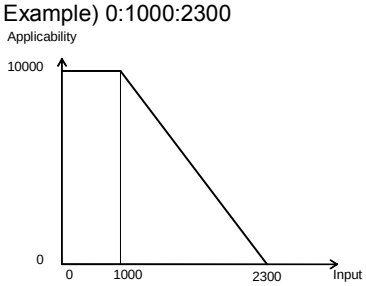

Two X coordinates
Example) 0:1000

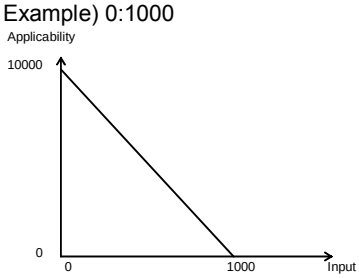

NS, ZR, and PS

Three X coordinates
Example) 3000:4000:4500

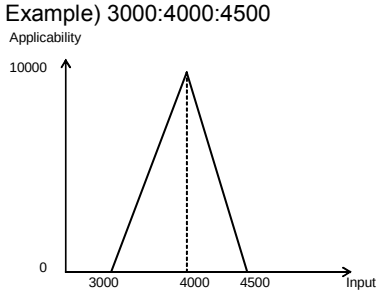

Four X coordinates
Example) 3000:4000:6000:7000

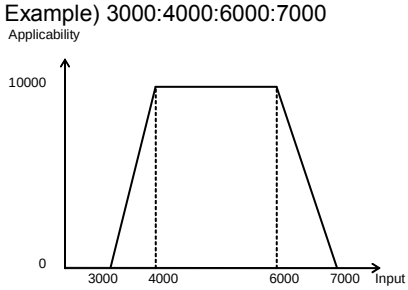

Example) 4000:4000:6000:6000

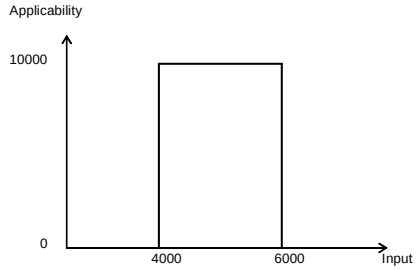

PL

Three X coordinates
Example) (X1:X2:X3) = (7000:9000:10000)

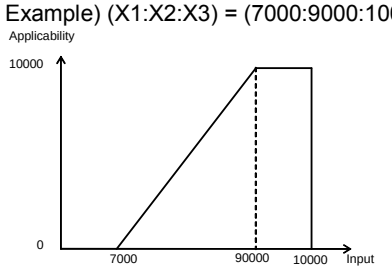

Two X coordinates
Example) 9000:10000

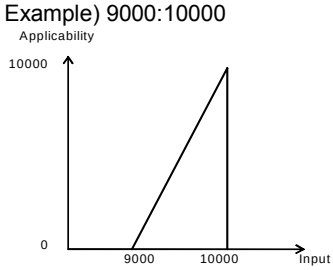

2. Membership functions for conclusions

Conclusion membership functions can be set for up to 5 labels for outputs Y1 and Y2. Singletons for labels NL, NS, ZR, PS, and PL are set in ITEM 081 to ITEM 090 as values along the Y axis. (Up to 10 settings are possible, i.e., 2 outputs x 5 labels.)

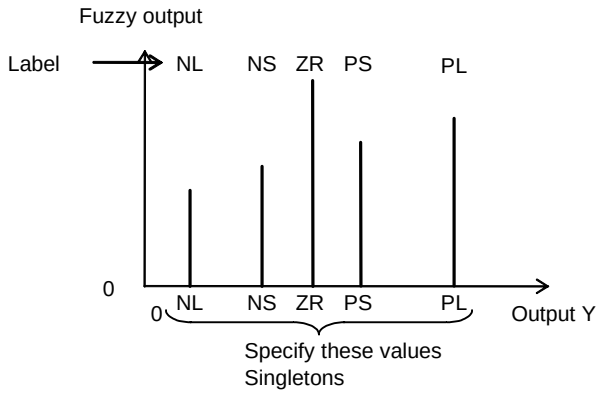

Outlineof fuzzy logic processing

Inferences are processes as follows: 1) Conditions, 2) Conclusions, 3) Deterministic output calculations.

1. Conditions

Inputs X1 to X8 and the condition membership functions are used to find the applicability for each label for each input. Although there are from 1 to 8 conditions for inputs X1 to X8, the minimum applicability for all conditions for each is found and used as the applicability for the rule.

Example)
Condition membership functions:
Setting NL for input X1) 0:100:500 is specified for ITEM 041.
Setting PL for input X2) 300:700:1000 is specified for ITEM 050.

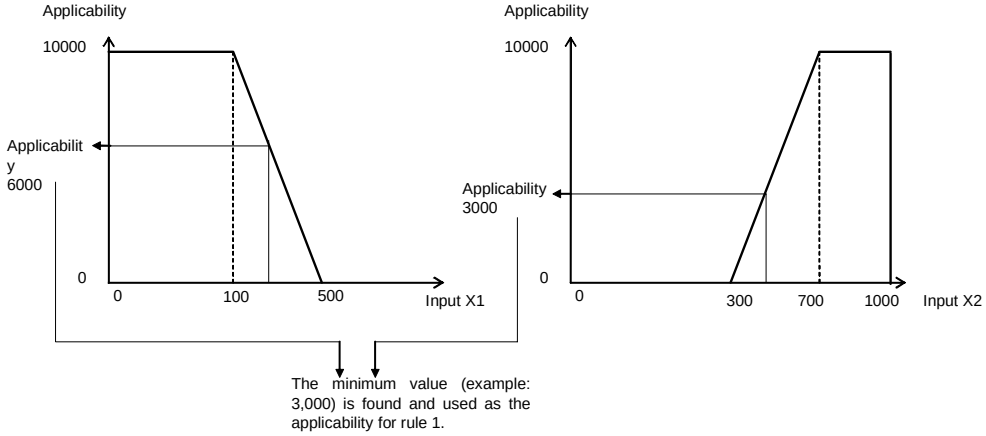

The applicability is thus found for all rules for use in the conclusions.

2. Conclusions

The applicability found for each rule in the conditions is compared to the labels for the conclusions, and the maximum value is found for each label. The maximum value is used as the fuzzy output for that label.
For these, the horizontal singletons for outputs Y1 and Y2 are specified on the horizontal axis as values Y1 and Y2 as specified by the conclusion membership functions. The results are shown for the following conclusion membership functions.

ZR singleton for output Y1 is set to 3000 by setting ITEM 083 to 3, 000.
If label ZR is used in the conclusions for other rules, the maximum value is used as the fuzzy output value for ZR. Here, the singleton for ZR is 3, 000.

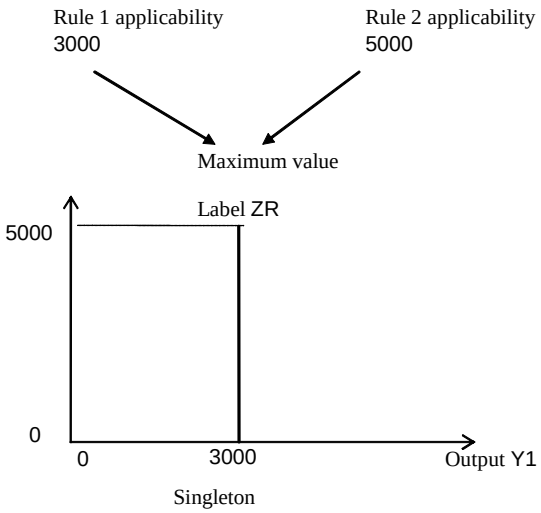

3. Deterministic output calculations

The center of gravities of up two five labels is found for outputs 1 and 2 and these are output as analog values Y1 and Y2.

Example) As shown below, the maximum value is found for other conclusion membership functions, the center of gravity of the fuzzy outputs for a maximum of five labels is found, and it is output to Y1 as the deterministic output value.

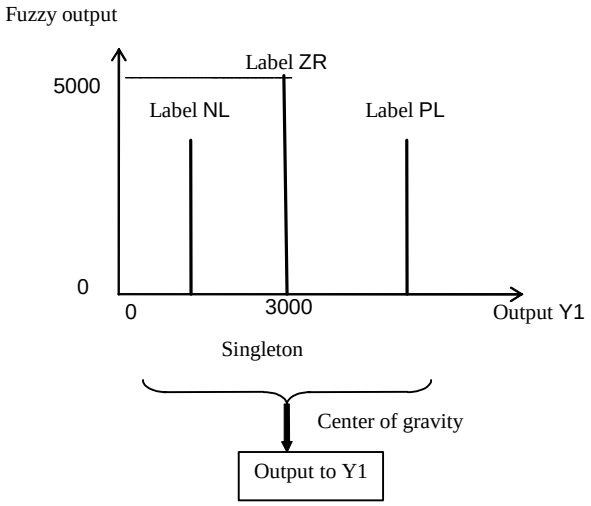

Note: The center of gravity method adds the coordinates for the labels for each membership funtion weighted by the applicability of each and then divides the total by the total sum of the applicabilities to find the deterministic output. The results corresponds to the center of gravity when the membership functions are thought of as graphic figures, using this center of gravity as the final output.

Execution error codes

When an execution error occurs, outputs 1 and 2 will be controlled by the setting of ITEM 023 and ITEM 024 (Output value selection switch for output 1/2 when rules are not fulfilled).

Code	Meaning	Description	Operation when error occurs	Countermeasure
1	Source/ destination not specified	Connection is not possible as specified.	Execution of Fuzzy Logic block will stop.	Check the block address or ITEM number of sources.
19	Inappropriate operation	There is a syntax error in a Fuzzy Logic block (Block Model 016) that prevents operation. 1) There is not one sign character and 5 numeric characters maximum (e.g., a + sign is specified). 2) Values are not separated by colons. 3) The values that are set are not sufficient. 4) More than two inflection points in membership functions are the same. 5) Inflection points in membership functions do not increase to the right. 6) A membership function used in a rule has not been defined.		Check the membership functions and rules. The number of the ITEM causing the problem will be provided in ITEM 006 (operation error details).

Block Model	Block Name	Block Address
<031>	Indication and Setting	001 to 032

Outline

This function block is the manual setter with PV indication and Set Point setting functions.

•This function block is provided with four PV alarms (high/high, high, low and low/low).
•It is also provided with a remote setting function that allow Remote/Local switching.

Block diagram

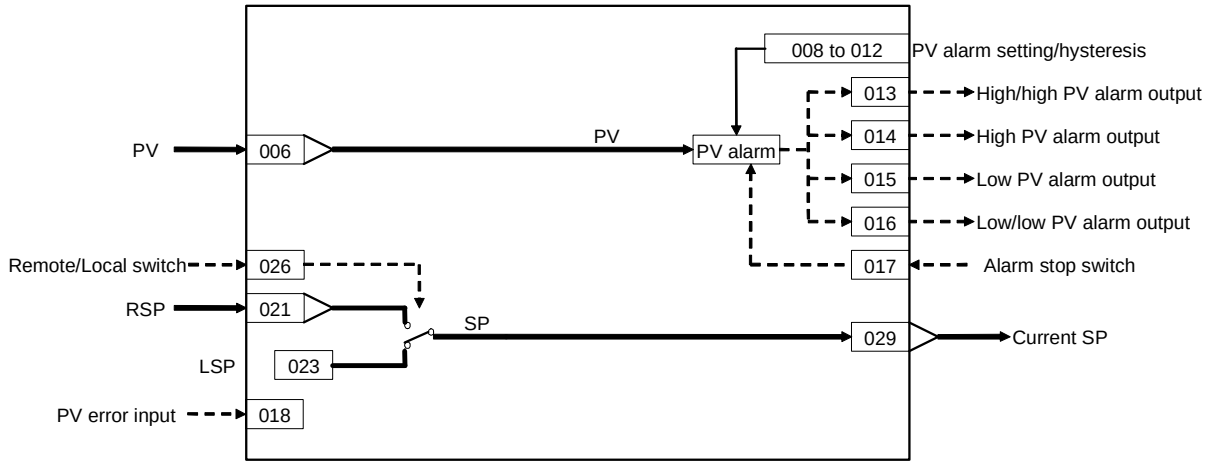

ITEM list

*1:On the CX-Process Monitor, the R/W mode is indicated in the Tuning screen or in the Control screen.

ITEM TYPE	ITEM	Symbol	Data Description	Data Range	Default	COLD start initialization	R/W Mode R: Read, W: Write, R/W: R/W-enabled, -: R/W-disabled Note: r and r/w: Read and read/write for validate action or monitor run status by CX-Process Tool or Monitor, (S): Initial setting data, (O): Operation data					Data Length (bytes)
							According to CX-Process Tool	According to CX-Process Monitor *1	According to ITEM Setting block	According to Step Ladder Program	Send/ Receive All Blocks	
Contact input	000		Stop block operation command (0: Cancel stop, 1: Stop)	0, 1	0	–	–	R/W	–	–	S/R	1
Parameter	001		Comment	23 characters	Block name	–	R/W(S)	–	–	–	–	24
	002		Block Model: Indication and Setting	031	031	–	R/W(S)	–	–	–	–	2
Special	003		Execution error display 0: Normal, Other: Error (See Appendix “Execution Error Code List.”)		0000	–	r	–	–	–	S	2
Parameter	004		Operation cycle (sec) 0: Common, 1: 0.1, 2: 0.2, 3: 0.5, 4: 1, 5: 2	0 to 5	0	–	R/W(S)	–	–	–	–	2
Analog input connection information	006		PV source designation BBB: Block address, III: ITEM No.	BBBIII	000000	–	R/W(S)	–	–	–	–	4
Analog input	007	PV	PV input	-15.00 to +115.00%	0.00	Yes	r	R	–	–	S	2
Parameter	008		High/high alarm setting	-15.00 to +115.00%	115.00	–	R/W(O)	R/W	W	–	S/R	2
	009		High alarm setting	-15.00 to +115.00%	100.00	–	R/W(O)	R/W	W	–	S/R	2
	010		Low alarm setting	-15.00 to +115.00%	0.00	–	R/W(O)	R/W	W	–	S/R	2
	011		Low/low alarm setting	-15.00 to +115.00%	-15.00	–	R/W(O)	R/W	W	–	S/R	2
	012		Hysteresis setting	0 to 115.00%	1.00	–	R/W(S)	–	W	–	–	2
Contact output	013	HH	High/high alarm output	0, 1	0	Yes	–	R	–	R	S	1
	014	H	High alarm output	0, 1	0	Yes	–	R	–	R	S	1
	015	L	Low/low alarm output	0, 1	0	Yes	–	R	–	R	S	1
	016	LL	Low alarm output	0, 1	0	Yes	–	R	–	R	S	1
Contact input	017	S1	Alarm stop switch 0: Alarm, 1: Stop	0, 1	0	–	R/W(O)	R/W	–	R/W	S/R	1
Connection terminal contact input	018*2		PV error contact source designation	BBBIII	000000	–	R/W(S)	–	–	–	–	4
Contact output	019*2	PVE	PV error indication 0: Normal, 1: Error → MANUAL mode	0, 1	0	Yes	–	R	–	R	S	1
Parameter	020		Alarm limit*3 0: No, 1: Yes Note: Limits the alarm set value to between 0.00% and 100.00%.	0, 1	0	–	R/W (S)	–	–	–	–	1

*2: These ITEMs were added in Loop Control Unit Ver. 2.00.

*3: If ITEM 020 (alarm limit) it set to 1 (ON), the alarm set range will be limited to between 0.00% and 100.00% as follows (supported by Loop Control Unit version 2.50 or later):

- If the high/high alarm setting (ITEM 008) or the high alarm set value (ITEM 009) is set to a value over 100.00%, the alarm output will not turn ON even if the PV exceeds the alarm set value.
- If the low/low alarm setting (ITEM 011) or the low alarm set value (ITEM 010) is set to a value below 00.00%, the alarm output will not turn ON even if the PV exceeds the alarm set value.

Setting Value Set Point

*1:On the CX-Process Monitor, the R/W mode is indicated in the Tuning screen or in the Control screen.

ITEM TYPE	ITEM	Symbol	Data Description	Data Range	Default	COLD start initialization	R/W Mode R: Read, W: Write, R/W: R/W-enabled, -: R/W-disabled Note: r and r/w: Read and read/write for validate action or monitor run status by CX-Process Tool or Monitor, (S): Initial setting data, (O): Operation data					Data Length (bytes)
							According to CX-Process Tool	According to CX-Process Monitor *1	According to ITEM Setting block	According to Step Ladder Program	Send/Receive All Blocks	
Analog input connection information	021		Remote Set Point source designation	BBBIII	000000	–	R/W(S)	–	–	–	–	4
Analog input	022	RSP	Remote Set Point input	-15.00 to +115.00%	0.00	Yes	r	–	–	–	–	2
Parameter	023		Local Set Point setting	-15.00 to +115.00%	0.00	–	R/W(O)	W	W	–	R	2
	024		SP setting mode (default) 0: Local only, 1: Remote/Local Note: Setting to 0 invalidates ITEM026.	0, 1	0	–	R/W(S)	R	–	–	S/R	1
Contact input/ parameter	026	R/L	Remote/Local switch 0: Local, 1: Remote Note: Valid only when ITEM024 is 1	0, 1	0	Yes	R/W(O)	R/W	–	R/W	S/R	1
Analog output	029	CSP	Current SP setting	-15.00 to +115.00%	0.00	Yes	r/w	R	–	–	S	2

Data for host display

*1:On the CX-Process Monitor, the R/W mode is indicated in the Tuning screen or in the Control screen.

ITEM TYPE	ITEM	Symbol	Data Description	Data Range	Default	COLD start initialization	R/W Mode R: Read, W: Write, R/W: R/W-enabled, -: R/W-disabled Note: r and r/w: Read and read/write for validate action or monitor run status by CX-Process Tool or Monitor, (S): Initial setting data, (O): Operation data					Data Length (bytes)
							According to CX-Process Tool	According to CX-Process Monitor *1	According to ITEM Setting block	According to Step Ladder Program	Send/Receive All Blocks	
Parameter	099		Label	0 to 15	0	Yes	R/W(O)	R/W	W	–	S/R	2

List of tag ITEMs on CX-Process Monitor or SCADA software

The following tag ITEMs are used to specify ITEMs with either 1) Monitor tags when sending function blocks to the CX-Process Monitor from 1-Block/4-Block Send Terminal to Computer (Block Model 403/404) or 2) CSV tags from SCADA software when sending/receiving data to/from the CPU Unit using Receive All Blocks (Block Model 461)/Send All Blocks (Block Model 462). All tag ITEMs are fixed and cannot be changed.

ITEM	Data Name	CSV Tags in CX-Process Monitor	CSV Tags in SCADA Software
		Tag ITEM (fixed)	Tag ITEM (fixed)
000	Stop block operation command	MT_ST	MT_ST
003	Execution error display	None	ERR
007	PV input	PV	PV
008	High/high alarm setting	HH_SP	HH_SP
009	High alarm setting	H_SP	H_SP
010	Low alarm setting	L_SP	L_SP
011	Low/low alarm setting	LL_SP	LL_SP
013	High/high alarm output	HH	HH
014	High alarm output	H	H
015	Low alarm output	L	L
016	Low/low alarm output	LL	LL
017	Alarm stop switch	ALM_OFF	AOF
019	PV error display	PV_ABN	PV_ABN
023	Local Set Point setting	None	SP
024	Set Point setting mode (default)	CAS_SET	CAS_SET
026	Remote/Local switch	R/L_SW	R/L_SW
029	Current Set Point output	SP	SP
099	Label	OP_MK	OP_MK

Block Model	Block Name	Block Address
<032>	Indication and Operation	001 to 032

Outline

This function block is the manual setter with PV indication and MV operation functions.

•This function block is provided with four PV alarm outputs (high/high, high, low and low/low).
•It is also provided with a remote setting function that allows Remote/Local switching.

Block diagram

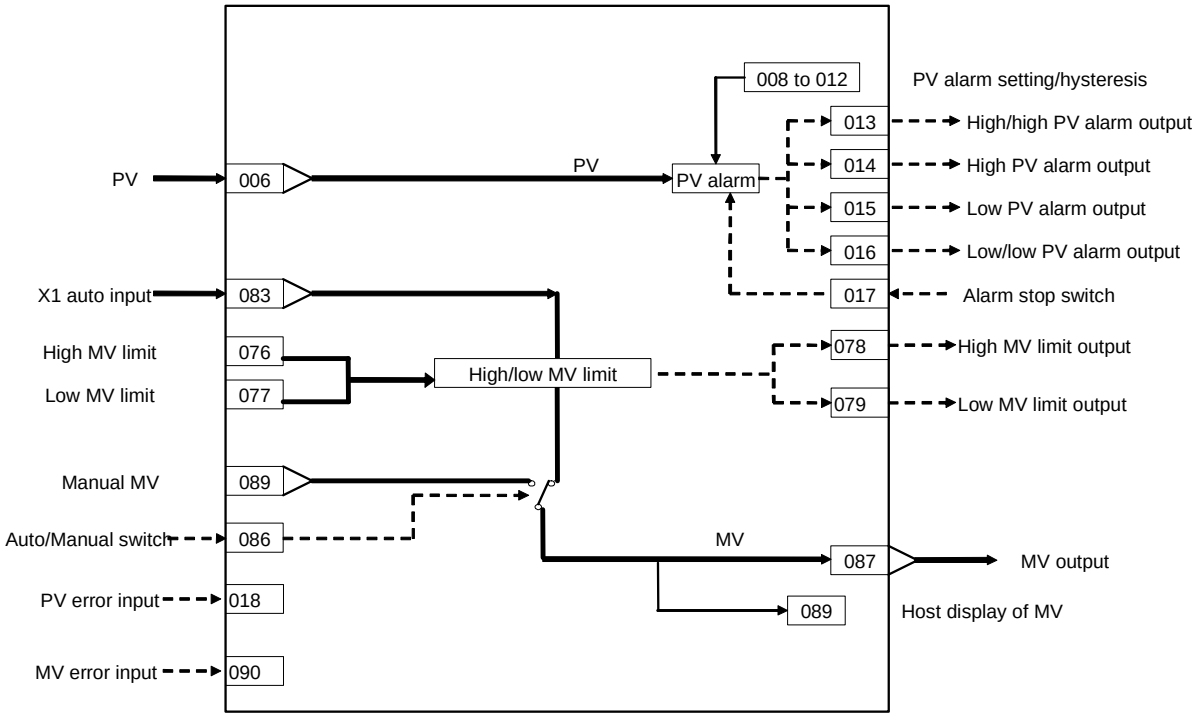

ITEM list

*1:On the CX-Process Monitor, the R/W mode is indicated in the Tuning screen or in the Control screen.

ITEM TYPE	ITEM	Symbol	Data Description	Data Range	Default	COLD start initialization	R/W Mode R: Read, W: Write, R/W: R/W-enabled, -: R/W-disabled Note: r and r/w: Read and read/write for validate action or monitor run status by CX-Process Tool or Monitor, (S): Initial setting data, (O): Operation data					Data Length (bytes)
							According to CX-Process Tool	According to CX-Process Monitor *1	According to ITEM Setting block	According to Step Ladder Program	Send/ Receive All Blocks	
Contact input	000		Stop block operation command (0: Cancel stop, 1: Stop)	0, 1	0	–	–	R/W	–	–	S/R	1
Parameter	001		Comment	23 characters	Block name	–	R/W(S)	–	–	–	–	24
	002		Block Model: Indication and Operation	032	032	–	R/W(S)	–	–	–	–	2
Special	003		Execution error display 0: Normal, Other: Error (See Appendix "Execution Error Code List.")		0000	–	r	–	–	–	S	2
Parameter	004		Operation cycle (sec) 0: Common, 1: 0.1, 2: 0.2, 3: 0.5, 4: 1, 5: 2	0 to 5	0	–	R/W(S)	–	–	–	–	2
Analog input connection information	006		PV source designation BBB: Block address, III: ITEM No.	BBBIII	000000	–	R/W(S)	–	–	–	–	4
Analog input	007	PV	PV input	-15.00 to +115.00%	0.00	Yes	r	R	–	–	S	2
Parameter	008		High/high alarm setting	-15.00 to +115.00%	115.00	–	R/W(O)	R/W	W	–	S/R	2
	009		High alarm setting	-15.00 to +115.00%	100.00	–	R/W(O)	R/W	W	–	S/R	2
	010		Low alarm setting	-15.00 to +115.00%	0.00	–	R/W(O)	R/W	W	–	S/R	2
	011		Low/low alarm setting	-15.00 to +115.00%	-15.00	–	R/W(O)	R/W	W	–	S/R	2
	012		Hysteresis setting	0 to 115.00%	1.00	–	R/W(S)	–	W	–	–	2
Contact output	013	HH	High/high alarm output	0, 1	0	Yes	–	R	–	R	S	1
	014	H	High alarm output	0, 1	0	Yes	–	R	–	R	S	1
	015	L	Low alarm output	0, 1	0	Yes	–	R	–	R	S	1
	016	LL	Low/low alarm output	0, 1	0	Yes	–	R	–	R	S	1
Contact input	017	S1	Alarm stop switch 0: Alarm, 1: Stop	0, 1	0	–	R/W(O)	R/W	–	R/W	S/R	1
Connection terminal contact input	018*2		PV error contact source designation	BBBIII	000000	–	R/W(S)	–	–	–	–	4
Contact output	019*2	PVE	PV error indication 0: Normal, 1: Error → MANUAL mode	0, 1	0	Yes	–	R	–	R	S	1
Parameter	020		Alarm limit*3 0: No, 1: Yes Note: Limits the alarm set value to between 0.00% and 100.00%.	0, 1	0	–	R/W (S)	–	–	–	–	1

*2: These ITEMs were added in Loop Control Unit Ver. 2.00.

*3: If ITEM 020 (alarm limit) it set to 1 (ON), the alarm set range will be limited to between 0.00% and 100.00% as follows (supported by Loop Control Unit version 2.50 or later):

- If the high/high alarm setting (ITEM 008) or the high alarm set value (ITEM 009) is set to a value over 100.00%, the alarm output will not turn ON even if the PV exceeds the alarm set value
- If the low/low alarm setting (ITEM 011) or the low alarm set value (ITEM 010) is set to a value below 0.00%, the alarm output will not turn ON even if the PV exceeds the alarm set value.
- If the high MV limit (ITEM 076) is set to a value over 100.00%, the high MV limit output will not turn ON even if the high limit is reached. The high limit function, however, will work.
- If the low MV limit (ITEM 077) is set to a value below 0.00%, the low MV limit output will not turn ON even if the low limit is reached. The low limit function, however, will work.

MV

*1:On the CX-Process Monitor, the R/W mode is indicated in the Tuning screen or in the Control screen.

ITEM TYPE	ITEM	Symbol	Data Description	Data Range	Default	COLD start initialization	R/W Mode R: Read, W: Write, R/W: R/W-enabled, -: R/W-disabled Note: r and r/w: Read and read/write for validate action or monitor run status by CX-Process Tool or Monitor, (S): Initial setting data, (O): Operation data					Data Length (bytes)
							According to CX-Process Tool	According to CX-Process Monitor *1	According to ITEM Setting block	According to Step Ladder Program	Send/ Receive All Blocks	
Parameter	076		High MV limit	±320.00%	105.00	–	R/W(O)	R/W	W	–	S/R	2
	077		Low MV limit	±320.00%	-5.00	–	R/W(O)	R/W	W	–	S/R	2
Contact output	078 *2	U1	High MV limit output 1: High limit or higher, 0: Lower than limit Valid only for AUTO mode; always 0 for Manual mode.	0, 1	0	Yes	–	R	–	R	S	1
	079 *1	U2	Low MV limit output 1: Low limit or lower, 0: Higher than limit Valid only for AUTO mode; always 0 for Manual mode.	0, 1	0	Yes	–	R	–	R	S	1
Analog input connection information	083		Auto input source designation	BBBIII	000000	–	R/W(S)	–	–	–	–	4
Analog input	084	X1	Auto input	±320.00%	0.00	Yes	r	R	–	–	S	2
Contact input/ parameter	086	A/M	Auto/Manual switch 0: Manual, 1: Auto	0, 1	0	Yes	R/W(O)	R/W	–	R/W	S/R	1
Analog output	087	MV	MV output	±320.00%	0.00	Yes	r/w	–	–	–	–	2

*2: These ITEMs were added in Loop Control Unit Ver. 2.00.

Data for host display

*1:On the CX-Process Monitor, the R/W mode is indicated in the Tuning screen or in the Control screen.

ITEM TYPE	ITEM	Symbol	Data Description	Data Range	Default	COLD start initialization	R/W Mode R: Read, W: Write, R/W: R/W-enabled, -: R/W-disabled Note: r and r/w: Read and read/write for validate action or monitor run status by CX-Process Tool or Monitor, (S): Initial setting data, (O): Operation data					Data Length (bytes)
							According to CX-Process Tool	According to CX-Process Monitor *1	According to ITEM Setting block	According to Step Ladder Program	Send/ Receive All Blocks	
Parameter	088		Inversion of host display of MV 0: Not used, 1: Used Note: "Inversion" changes 0 to 100% range to 100 to 0%.	0, 1	0	–	R/W(S)	–	–	–	–	1
	089		Host display of MV	±320.00%	0.00	Yes	R/W(O)	R/W	W	–	S/R	2
Connection terminal contact input	090 *2		MV error contact source designation	BBBIII	000000	–	R/W(S)	–	–	–	–	4
Contact output	091 *2	MVE	MV error display 0: Normal, 1: Error	0, 1	0	–	–	R	–	R	S	1
Parameter	098		MV index position	-15.00 to +115.00%	0.00	Yes	R/W(O)	R/W	W	–	S/R	2
	099		Label	0 to 15	0	Yes	R/W(O)	R/W	W	–	S/R	2

*2: These ITEMs were added in Loop Control Unit Ver. 2.00.

List of tag ITEMs on CX-Process Monitor or SCADA software

The following tag ITEMs are used to specify ITEMs with either 1) Monitor tags when sending function blocks to the CX-Process Monitor from 1-Block/4-Block Send Terminal to Computer (Block Model 403/404) or 2) CSV tags from SCADA software when sending/receiving data to/from the CPU Unit using Receive All Blocks (Block Model 461)/Send All Blocks (Block Model 462). All tag ITEMs are fixed and cannot be changed.

ITEM	Data Name	CSV Tags in CX-Process Monitor	CSV Tags in SCADA Software
		Tag ITEM (fixed)	Tag ITEM (fixed)
000	Stop block operation command	MT_ST	MT_ST
003	Execution error display	None	ERR
007	PV input	PV	PV
008	High/high alarm setting	HH_SP	HH_SP
009	High alarm setting	H_SP	H_SP
010	Low alarm setting	L_SP	L_SP
011	Low/low alarm setting	LL_SP	LL_SP
013	High/high alarm output	HH	HH
014	High alarm output	H	H
015	Low alarm output	L	L
016	Low/low alarm output	LL	LL
017	Alarm stop switch	ALM_OFF	AOF
019	PV error display	PV_ABN	PV_ABN
076	High MV limit	MH_LMT	MH_LMT
077	Low MV limit	ML_LMT	ML_LMT
078	High MV limit output	MHA	MHA
079	Low MV limit output	MLA	MLA
084	Auto input	X1	X1
086	Auto/Manual switch	A/M_SW	A/M_SW
089	Data for host display	MV	MV
091	MV error display	MV_ABN	MV_ABN
098	MV index position	MV_IDX	MV_IDX
099	Label	OP_MK	OP_MK

Block Model	Block Name	Block Address
<033>	Ratio Setting	001 to 032

Outline

This function block is the ratio and bias setter with PV indication and ratio setting function.

•Ratio can be set externally.
•Input bias and output bias can be set.
•This function block is provided with engineering unit setting data for ratio and engineering unit setting data for PV for display on the host.

Ratio calculation formula

where

$$MV = K1\frac{SP}{100}(PV - A1) - B1$$

MV:Output (-320.00 to +320.00%)
SP:Ratio setting (-15 to +115.00%)
PV: Reference input (%)
K1:Ratio gain (±10.000) .... Set the ratio to SP=100%.
Example) Set "3.000" when the ratio range is 0 to 3 times.
A1:Input bias (±320.00%)
B1:Output bias (±320.00%)

External setting of ratio

Use external ratio setting source designation (ITEM021).

Actual graduation of ratio

To set the Set Point scale displayed on the host to the actual scale, set the range corresponding to SP in the above ratio calculation formula on the host computer.

Block diagram

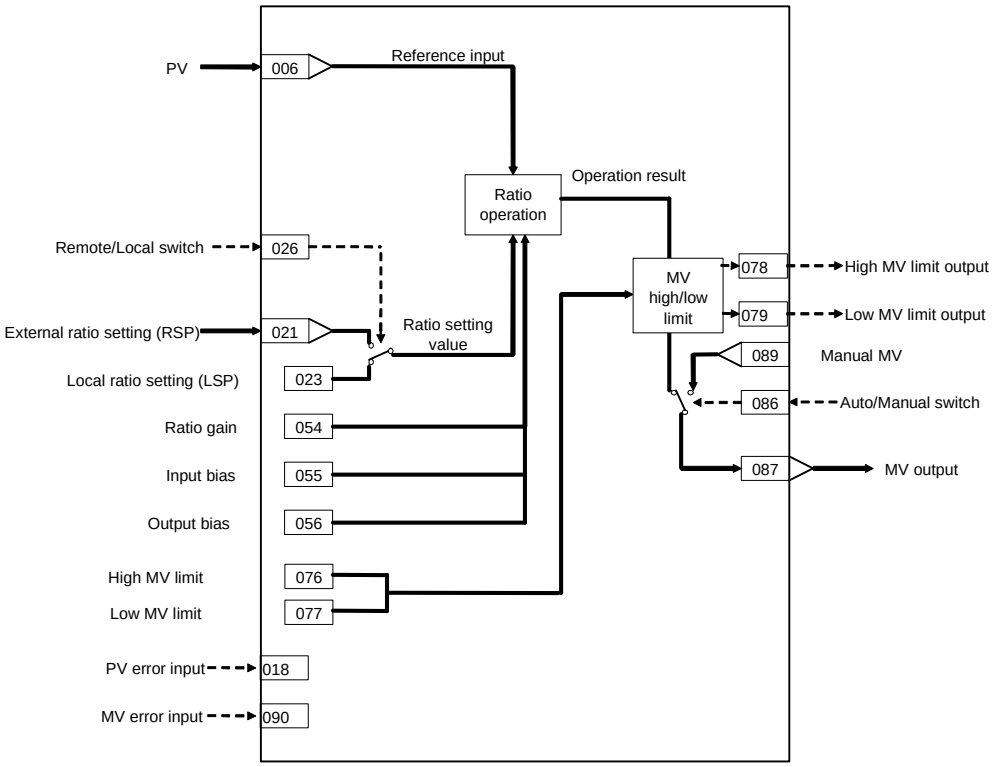

ITEM list

*1:On the CX-Process Monitor, the R/W mode is indicated in the Tuning screen or in the Control screen.

ITEM TYPE	ITEM	Symbol	Data Description	Data Range	Default	COLD start initialization	R/W Mode R: Read, W: Write, R/W: R/W-enabled, -: R/W-disabled Note: r and r/w: Read and read/write for validate action or monitor run status by CX-Process Tool or Monitor, (S): Initial setting data, (O): Operation data					Data Length (bytes)
							According to CX-Process Tool	According to CX-Process Monitor *1	According to ITEM Setting block	According to Step Ladder Program	Send/ Receive All Blocks	
Contact input	000		Stop block operation command (0: Cancel stop, 1: Stop)	0, 1	0	–	–	R/W	–	–	S/R	1
Parameter	001		Comment	23 characters	Block name	–	R/W(S)	–	–	–	–	24
	002		Block Model: Ratio Setting	033	033	–	R/W(S)	–	–	–	–	2
Special	003		Execution error display 0: Normal, Other: Error (See Appendix “Execution Error Code List.”)		0000	–	r	–	–	–	S	2
Parameter	004		Operation cycle (sec) 0: Common, 1: 0.1, 2: 0.2, 3: 0.5, 4: 1, 5: 2,	0 to 5	0	–	R/W(S)	–	–	–	–	2
Analog input connection information	006		Reference input source designation BBB: Block address, III: ITEM No.	BBBIII	000000	–	R/W(S)	–	–	–	–	4
Analog input	007	PV	Reference input	-15.00 to +115.00%	0.00	Yes	r	R	–	–	S	2
Connection terminal contact input	018 *2		PV error contact source designation	BBBIII	000000	–	R/W(S)	–	–	–	–	4
Contact output	019 *2	PVE	PV error indication 0: Normal, 1: Error → MANUAL mode	0, 1	0	Yes	–	R	–	R	S	1
Parameter	020		Alarm limit *3 0: No, 1: Yes Note: Limits the alarm set value to between 0.00% and 100.00%.	0, 1	0	–	R/W (S)	–	–	–	–	1
Analog input connection information	021		External ratio setting source designation	BBBIII	000000	–	R/W(S)	–	–	–	–	4
Analog input	022	RSP	External ratio setting	-15.00 to +115.00%	0.00	Yes	r	R	–	–	–	2
Parameter	023	LSP	Local ratio setting	-15.00 to +115.00%	0.00	–	R/W(O)	R/W	W	–	R	2
	024		Ratio setting mode (default) 0: Local only, 1: Remote/Local Note: Setting to 0 invalidates ITEM026.	0, 1	0	–	R/W(S)	–	–	–	S/R	1
Contact input/ parameter	026	R/L	Remote/Local switch 0: Local, 1: Remote Note: Valid only when ITEM024 is 1	0, 1	0	Yes	R/W(O)	R/W	–	R/W	S/R	1
Analog output	029	SP	Current SP output	-15.00 to +15.00%	0.00	Yes	r/w	–	–	–	S	2

*2: These ITEMs were added in Loop Control Unit Ver. 2.00.

*3: If ITEM 020 (alarm limit) it set to 1 (ON), the alarm set range will be limited to between 0.00% and 100.00% as follows (supported by Loop Control Unit version 2.50 or later):

- If the high MV limit (ITEM 076) is set to a value over 100.00%, the high MV limit output will not turn ON even if the high limit is reached. The high limit function, however, will work.
- If the low MV limit (ITEM 077) is set to a value below 0.00%, the low MV limit output will not turn ON even if the low limit is reached. The low limit function, however, will work.

Ratio operation

*1:On the CX-Process Monitor, the R/W mode is indicated in the Tuning screen or in the Control screen.

ITEM TYPE	ITEM	Symbol	Data Description	Data Range	Default	COLD start initialization	R/W Mode R: Read, W: Write, R/W: R/W-enabled, -: R/W-disabled Note: r and r/w: Read and read/write for validate action or monitor run status by CX-Process Tool or Monitor, (S): Initial setting data, (O): Operation data					Data Length (bytes)
							According to CX-Process Tool	According to CX-Process Monitor *1	According to ITEM Setting block	According to Step Ladder Program	Send/ Receive All Blocks	
Parameter	054	K1	Ratio range (sets signal ratio range corresponding to SP=100%)	±10.000	1.000	–	R/W(O)	R/W	W	–	S/R	2
	055	A1	Input bias	±320.00%	0.00	–	R/W(O)	R/W	W	–	S/R	2
	056	B1	Output bias	±320.00%	0.00	–	R/W(O)	R/W	W	–	S/R	2

MV

*1:On the CX-Process Monitor, the R/W mode is indicated in the Tuning screen or in the Control screen.

ITEM TYPE	ITEM	Symbol	Data Description	Data Range	Default	COLD start initialization	R/W Mode R: Read, W: Write, R/W: R/W-enabled, -: R/W-disabled Note: r and r/w: Read and read/write for validate action or monitor run status by CX-Process Tool or Monitor, (S): Initial setting data, (O): Operation data					Data Length (bytes)
							According to CX-Process Tool	According to CX-Process Monitor *1	According to ITEM Setting block	According to Step Ladder Program	Send/ Receive All Blocks	
Parameter	076	MH	High MV limit	±320.00%	105.00	–	R/W(O)	R/W	W	–	S/R	2
	077	ML	Low MV limit	±320.00%	-5.00	–	R/W(O)	R/W	W	–	S/R	2
Contact output	078 *2	U1	High MV limit output 1: High limit or higher, 0: Lower than limit Valid only for AUTO mode; always 0 for Manual mode.	0, 1	0	Yes	–	R	–	R	S	1
	079 *2	U2	Low MV limit output 1: Low limit or lower, 0: Higher than limit Valid only for AUTO mode; always 0 for Manual mode.	0, 1	0	Yes	–	R	–	R	S	1
Contact input/ parameter	086	A/M	Auto/Manual switch 0: Manual, 1: Auto	0, 1	0	Yes	R/W(O)	R/W	–	R/W	S/R	1
Analog output	087	MV	Output	±320.00%	0.00	Yes	r/w	–	–	–	–	2

*2: These ITEMs were added in Loop Control Unit Ver. 2.00.

Data for host display

*1:On the CX-Process Monitor, the R/W mode is indicated in the Tuning screen or in the Control screen.

ITEM TYPE	ITEM	Symbol	Data Description	Data Range	Default	COLD start initialization	R/W Mode R: Read, W: Write, R/W: R/W-enabled, -: R/W-disabled Note: r and r/w: Read and read/write for validate action or monitor run status by CX-Process Tool or Monitor, (S): Initial setting data, (O): Operation data					Data Length (bytes)
							According to CX-Process Tool	According to CX-Process Monitor *1	According to ITEM Setting block	According to Step Ladder Program	Send/ Receive All Blocks	
Parameter	088		Inversion of host display of MV 0: Not used, 1: Used Note: "Inversion" changes 0 to 100% range to 100 to 0%.	0, 1	0	–	R/W(S)	–	–	–	–	1
	089		Host display of MV	±320.00%	0.00	Yes	R/W(O)	R/W	W	–	S/R	2
Connection terminal contact input	090 *2		MV error contact source designation	BBBIII	000000	–	R/W(S)	–	–	–	–	4

*1:On the CX-Process Monitor, the R/W mode is indicated in the Tuning screen or in the Control screen.

ITEM TYPE	ITEM	Symbol	Data Description	Data Range	Default	COLD start initialization	R/W Mode R: Read, W: Write, R/W: R/W-enabled, -: R/W-disabled Note: r and r/w: Read and read/write for validate action or monitor run status by CX-Process Tool or Monitor, (S): Initial setting data, (O): Operation data					Data Length (bytes)
							According to CX-Process Tool	According to CX-Process Monitor *1	According to ITEM Setting block	According to Step Ladder Program	Send/ Receive All Blocks	
Contact output	091*2	MVE	MV error display 0: Normal, 1: Error	0, 1	0	Yes	–	R	–	R	S	1
Parameter	098		MV index position	-15.00 to +115.00%	0.00	Yes	R/W(O)	R/W	W	–	S/R	2
	099		Label	0 to 15	0	Yes	R/W(O)	R/W	W	–	S/R	2

*2: These ITEMs were added in Loop Control Unit Ver. 2.00.

*3: If ITEM 020 (alarm limit) it set to 1 (ON), the alarm set range will be limited to between 0.00% and 100.00% as follows (supported by Loop Control Unit version 2.50 or later):

- If the high MV limit (ITEM 076) is set to a value over 100.00%, the high MV limit output will not turn ON even if the high limit is reached. The high limit function, however, will work.
- If the low MV limit (ITEM 077) is set to a value below 0.00%, the low MV limit output will not turn ON even if the low limit is reached. The low limit function, however, will work.

List of tag ITEMs on CX-Process Monitor or SCADA software

The following tag ITEMs are used to specify ITEMs with either 1) Monitor tags when sending function blocks to the CX-Process Monitor from 1-Block/4-Block Send Terminal to Computer (Block Model 403/404) or 2) CSV tags from SCADA software when sending/receiving data to/from the CPU Unit using Receive All Blocks (Block Model 461)/Send All Blocks (Block Model 462). All tag ITEMs are fixed and cannot be changed.

ITEM	Data Name	CSV Tags in CX-Process Monitor	CSV Tags in SCADA Software
		Tag ITEM (fixed)	Tag ITEM (fixed)
000	Stop block operation command	MT_ST	MT_ST
003	Execution error display	None	ERR
007	Reference input	PV	PV
019	PV error display	PV_ABN	PV_ABN
023	Local ratio setting	SP	SP
024	Ratio setting mode (default)	CAS_SET	CAS_SET
026	Remote/Local switch	R/L_SW	R/L_SW
029	Current SP output	None	SP
054	Ratio range	K1	K1
055	Input bias	A1	A1
056	Output bias	B1	B1
076	High MV limit	MH_LMT	MH_LMT
077	Low MV limit	ML_LMT	ML_LMT
078	High MV limit output	MHA	MHA
079	Low MV limit output	MLA	MLA
086	Auto/Manual switch	A/M_SW	A/M_SW
089	Data for host display	MV	MV
091	MV error display	MV_ABN	MV_ABN
098	MV index position	MV_IDX	MV_IDX
099	Label	OP_MK	OP_MK

Block Model	Block Name	Block Address
<034>	Indicator	001 to 032

Outline

This function block is the PV indicator.

•This function block is provided with four PV alarm outputs (high/high, high, low and low/low).

Block diagram

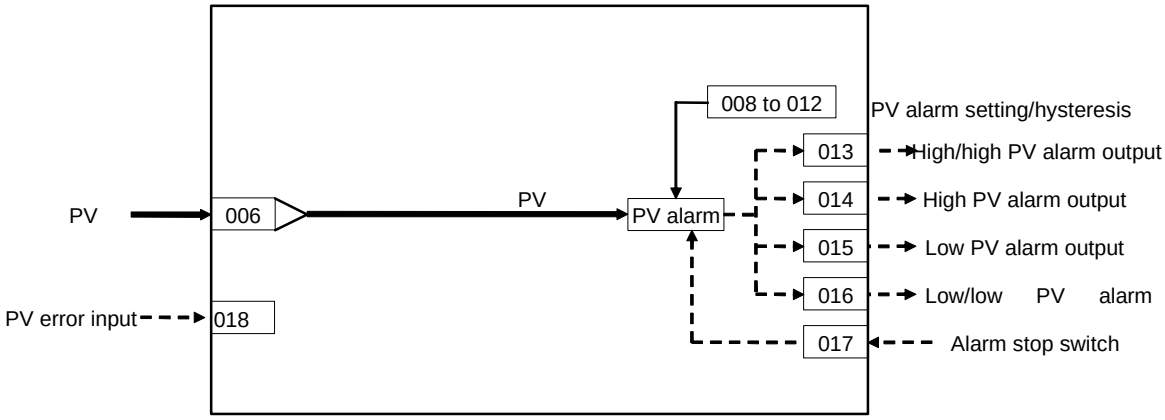

ITEM list

*1:On the CX-Process Monitor, the R/W mode is indicated in the Tuning screen or in the Control screen.

ITEM TYPE	ITEM	Symbol	Data Description	Data Range	Default	COLD start initialization	R/W Mode R: Read, W: Write, R/W: R/W-enabled, -: R/W-disabled Note: r and r/w: Read and read/write for validate action or monitor run status by CX-Process Tool or Monitor, (S): Initial setting data, (O): Operation data					Data Length (bytes)
							According to CX-Process Tool	According to CX-Process Monitor *1	According to ITEM Setting block	According to Step Ladder Program	Send/ Receive All Blocks	
Contact input	000		Stop block operation command (0: Cancel stop, 1: Stop)	0, 1	0	–	–	R/W	–	–	S/R	1
Parameter	001		Comment	23 characters	Block name	–	R/W(S)	–	–	–	–	24
	002		Block Model: Indicator	034	034	–	R/W(S)	–	–	–	–	2
Special	003		Execution error display 0: Normal, Other: Error (See Appendix "Execution Error Code List.")		0000	–	r	–	–	–	S	2
Parameter	004		Operation cycle 0: Common, 1: 0.1, 2: 0.2, 3: 0.5, 4: 1, 5: 2	0 to 5	0	–	R/W(S)	–	–	–	–	2
Analog input connection information	006		PV source designation BBB: Block address, III: ITEM No.	BBBIII	000000	–	R/W(S)	–	–	–	–	4
Analog input	007	PV	PV input	-15.00 to +115.00%	0.00	Yes	r	R	–	–	S	2
Parameter	008		High/high alarm setting	-15.00 to +115.00%	115.00	–	R/W(O)	R/W	W	–	S/R	2
	009		High alarm setting	-15.00 to +115.00%	100.00	–	R/W(O)	R/W	W	–	S/R	2
	010		Low alarm setting	-15.00 to +115.00%	0.00	–	R/W(O)	R/W	W	–	S/R	2
	011		Low/low alarm setting	-15.00 to +115.00%	-15.00	–	R/W(O)	R/W	W	–	S/R	2
	012		Hysteresis setting	0 to 115.00%	1.00	–	R/W(S)	–	W	–	–	2
Contact output	013	HH	High/high alarm output	0, 1	0	Yes	–	R	–	R	S	1
	014	H	High alarm output	0, 1	0	Yes	–	R	–	R	S	1
	015	L	Low/low alarm output	0, 1	0	Yes	–	R	–	R	S	1
	016	LL	Low alarm output	0, 1	0	Yes	–	R	–	R	S	1
Contact input parameter	017	S1	Alarm stop switch 0: Alarm, 1: Stop	0, 1	0	Yes	R/W(O)	R/W	–	R/W	S/R	1
Connection terminal contact input	018 *2		PV error contact source designation	BBBIII	000000	–	R/W(S)	–	–	–	–	4
Contact output	019 *2	PVE	PV error indication 0: Normal, 1: Error MANUAL mode	0, 1	0	Yes	–	R	–	R	S	1
Parameter	020		Alarm limit *3 0: No, 1: Yes Note: Limits the alarm set value to between 0.00% and 100.00%.	0, 1	0	–	R/W (S)	–	–	–	–	1

*2: These ITEMs were added in Loop Control Unit Ver. 2.00.

*3: If ITEM 020 (alarm limit) it set to 1 (ON), the alarm set range will be limited to between 0.00% and 100.00% as follows (supported by Loop Control Unit version 2.50 or later):

- If the high/high alarm setting (ITEM 008) or the high alarm set value (ITEM 009) is set to a value over 100.00%, the alarm output will not turn ON even if the PV exceeds the alarm set value.
- If the low/low alarm setting (ITEM 011) or the low alarm set value (ITEM 010) is set to a value below 0.00%, the alarm output will not turn ON even if the PV exceeds the alarm set value.

Data for host display

*1:On the CX-Process Monitor, the R/W mode is indicated in the Tuning screen or in the Control screen.

ITEM TYPE	ITEM	Symbol	Data Description	Data Range	Default	COLD start initialization	R/W Mode R: Read, W: Write, R/W: R/W-enabled, -: R/W-disabled Note: r and r/w: Read and read/write for validate action or monitor run status by CX-Process Tool or Monitor, (S): Initial setting data, (O): Operation data					Data Length (bytes)
							According to CX-Process Tool	According to CX-Process Monitor *1	According to ITEM Setting block	According to Step Ladder Program	Send/ Receive All Blocks	
Parameter	099		Label	0 to 15	0	Yes	R/W(O)	R/W	W	–	S/R	2

List of tag ITEMs on CX-Process Monitor or SCADA software

The following tag ITEMs are used to specify ITEMs with either 1) Monitor tags when sending function blocks to the CX-Process Monitor from 1-Block/4-Block Send Terminal to Computer (Block Model 403/404) or 2) CSV tags from SCADA software when sending/receiving data to/from the CPU Unit using Receive All Blocks (Block Model 461)/Send All Blocks (Block Model 462). All tag ITEMs are fixed and cannot be changed.

ITEM	Data Name	CSV Tags in CX-Process Monitor	CSV Tags in SCADA Software
		Tag ITEM (fixed)	Tag ITEM (fixed)
000	Stop block operation command	MT_ST	MT_ST
003	Execution error display	None	ERR
007	PV input	PV	PV
008	High/high alarm setting	HH_SP	HH_SP
009	High alarm setting	H_SP	H_SP
010	Low alarm setting	L_SP	L_SP
011	Low/low alarm setting	LL_SP	LL_SP
013	High/high alarm output	HH	HH
014	High alarm output	H	H
015	Low alarm output	L	L
016	Low/low alarm output	LL	LL
017	Alarm stop switch	ALM_OFF	AOF
019	PV error display	PV_ABN	PV_ABN
099	Label	OP_MK	OP_MK

Block Model	Block Name	Block Address
<045>	ES100X Controller Terminal	065 to 096

Outline

This function block is used to monitor values such as the SP, PV, and MV and set values such as the SP and PID constants for an ES100X Controller (a digital set-value controller) connected to the Loop Control Unit via serial communications.

One ES100X Controller

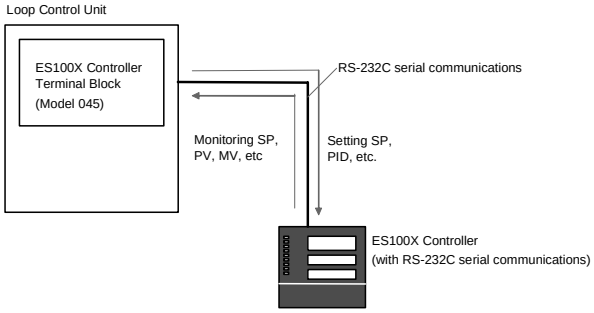

More than One ES100X Controller

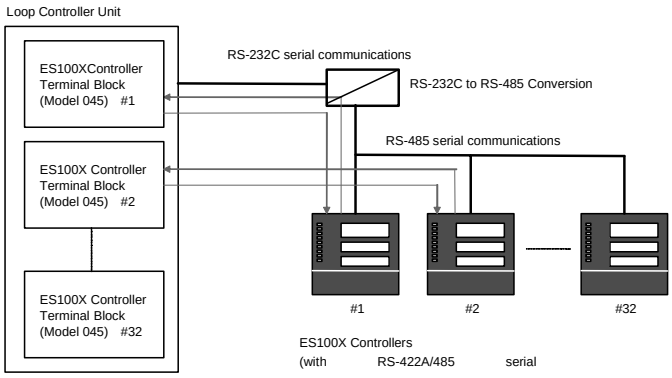

Applicable Controllers

The following digital set-value controllers are supported: ES100X-□□□01□ (RS-232C serial communications) and ES100X-□□□04□ (RS-422A/485 serial communications).

Number of ES100X Controllers per Function Block

Each ES100X Controller Terminal Block can monitor or set one ES100X Controller.

Number of ES100X Controllers per Loop Control Unit

- With ES100X Controllers supporting RS-232C connections, only one ES100X Controller can be connected to each Loop Control Unit.
- With ES100X Controllers supporting RS-422A/485 connections, each Loop Control Unit can be connected to up to 32 ES100X Controller. The ES100X unit number set in ITEM 006 is used to differentiate the ES100X Controller with which to communicate.

Connecting the Loop Control Unit to ES100X Controllers

The RS-232C port on the Loop Control Unit is connected to the RS-232C terminals or RS-422A/485 terminals on the ES100X Controllers.

Data Transfer Contents

Operating the Controller (Function Block to ES100X)

Switching between RUN and STOP, switching between automatic and manual operation, executing autotuning, and switch ES100X parameter setting modes.

Setting the Controller (Function Block to ES100X)

Setting the local SP, PID constants, MV (manipulated variable) upper/lower limits, manual mode MV, and inputting a remote SP within this function block to output to the ES100X.

Monitoring the Controller (ES100X to Function Block)

Monitoring the PV, current SP, MV, RUN/STOP status, automatic/manual status, remote/local parameter setting mode (serial communications/front panel keys), autotuning status, scaling settings (upper/lower limits and decimal point location).
You can also create outputs from within the function block, such as alarm outputs based on the PV (deviation, HH, H, L, and LL) or based on the MV upper/lower limits.

Data Update Cycle for Setting and Monitoring

Data will be updated every second for each ES100X Controller when the execution cycle of the function block is 0.1 second.
When more than one ES100X Controller Terminal Block is used, multiply 1 second by the number of ES100X Controllers connected.
It is possible, however, to use an interrupt transfer function to write to an ES100X Controller even when a different ES100X Controller Terminal Block is being executed.

ES100X Requirements

- Normal control must be set (set specifications setting mode C033 to 0).
  Note:Cascade control can be set as long as primary loop PID is set for communications.
- The local SP mode must be set (set operation mode P008 in the ES100X to 0 for a local SP).
  Note 1:Even if the ES100X is set for a remote SP (RSP), the ES100X will be force-set to a local SP (LSP) by this function block the first time it is executed.
  Note 2:If a remote SP is set, the remote SP can be read.
- Remote parameter setting mode must be set (enabling setting parameters via serial communications).
  (Set operation mode P007 to 1 for remote setting.)
  Note 1: The ES100X must be set to the remote parameter setting mode (in P007) to change the following parameters:
  Set point (ITEM 029), MV output for host display (ITEM 089), MV upper limit (ITEM 052), MV lower limit (ITEM 053), proportional band (ITEM 056), integral time (ITEM 057), and differential time (ITEM 058).
  Note 2: The following specifications can be changed regardless of the ES100X parameter setting mode: ES100X operation command (ITEM 080), A/M switch (ITEM 081), EX100 parameter setting method switch (ITEM 082) and AT command (ITEM 083).
- The bank number must be 0 (set operation mode P006 in the ES100X to 0).
  Note: Data in bank 0 will be read and written even if a different bank number is specified.
- The PID group number must be 1 (set the PID group number in bank number 0 in the ES100X to 1).
  Note:If the PID group number is not 1, the following cannot be set: P, I, D, and MV limits.
- Communications must be set to a data length of 7 bits, even parity, and two stop bits.
  Note: Communications will not be possible unless the above communications settings are made.
- Communications with the ES100X will be stopped when downloading the initial setting data from the CX-Process Tool (i.e., when the ITEM list read/write method is set to R/W(S) data from the CX-Process Tool). (Cold starts are automatically used for other function blocks.) Execute a hot or cold start to start the communications.

Block diagram

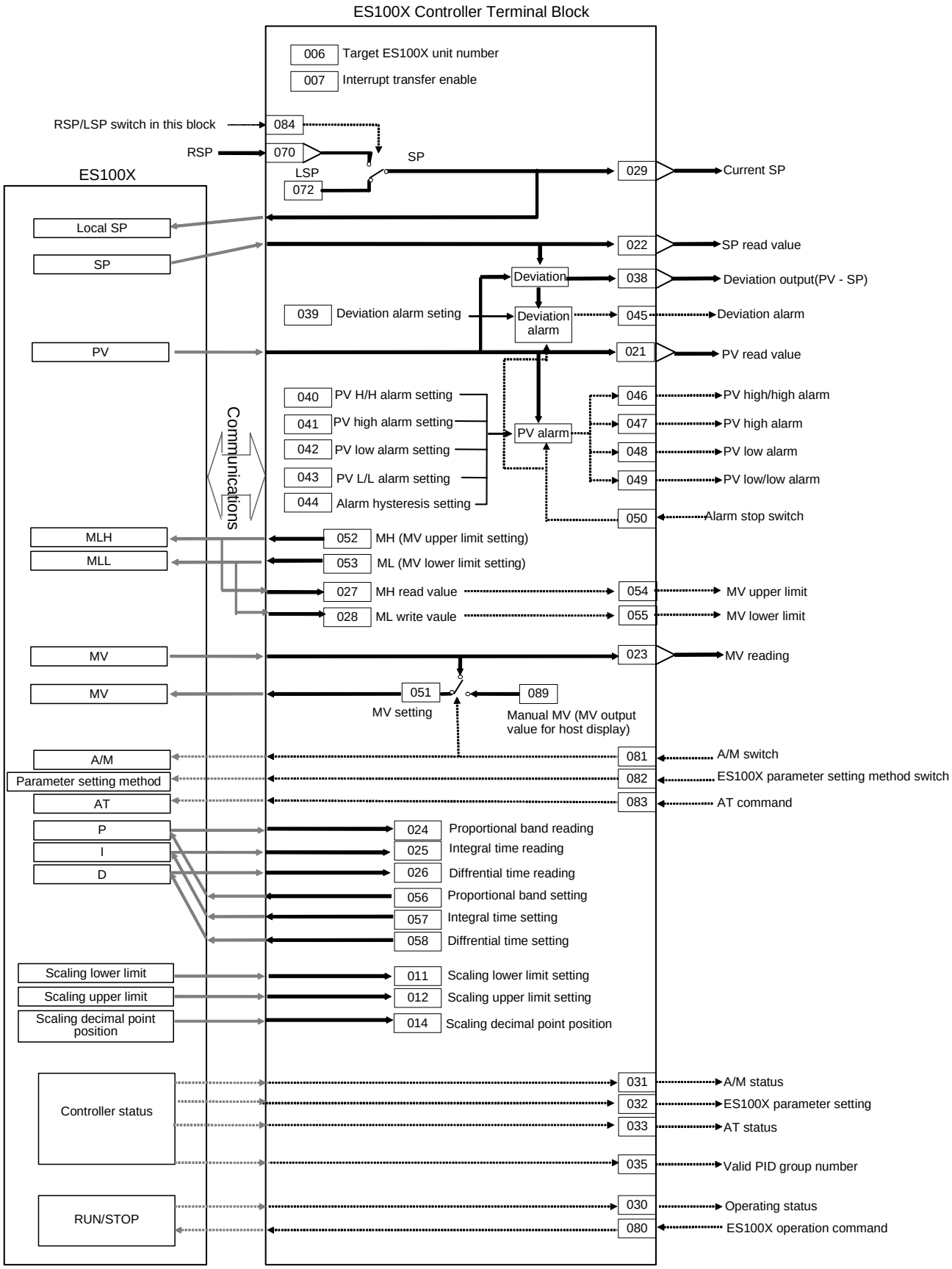

ITEM list

*1:On the CX-Process Monitor, the R/W mode is indicated in the Tuning screen or in the Control screen.

ITEM TYPE	ITEM	Symbol	Data Description	Data Range	Default	COLD start initialization	R/W Mode R: Read, W: Write, R/W: R/W-enabled, -: R/W-disabled Note: r and r/w: Read and read/write for validate action or monitor run status by CX-Process Tool or Monitor, (S): Initial setting data, (O): Operation data					Data Length (bytes)
							According to CX-Process Tool	According to CX-Process Monitor *1	According to ITEM Setting block	According to Step Ladder Program	Send/ Receive All Blocks	
Contact input	000		Stop block operation command 0: Cancel stop, 1: Stop	0, 1	0	–	–	–	–	–	S/R	1
Parameter	001		Comment	23 characters	Block name	–	R/W(S)	–	–	–	–	24
	002		Block Model: ES100X Controller Terminal	045	045	–	R/W(S)	–	–	–	–	2
Special	003		Execution error display 0: Normal, Other: error (See Appendix “Execution Error Code List.”)		0000	–	r	–	–	–	S	2
Parameter	004		Operation cycle (seconds) 0: Common, 1: 0.1, 2: 0.2, 3: 0.5, 4: 1, 5: 2	0 to 5	1	–	R/W(S)	–	–	–	–	2

Communications between Controllers

*1:On the CX-Process Monitor, the R/W mode is indicated in the Tuning screen or in the Control screen.

ITEM TYPE	ITEM	Symbol	Data Description	Data Range	Default	COLD start initialization	R/W Mode R: Read, W: Write, R/W: R/W-enabled, -: R/W-disabled Note: r and r/w: Read and read/write for validate action or monitor run status by CX-Process Tool or Monitor, (S): Initial setting data, (O): Operation data					Data Length (bytes)
							According to CX-Process Tool	According to CX-Process Monitor *1	According to ITEM Setting block	According to Step Ladder Program	Send/ Receive All Blocks	
Parameter	006		Target ES100X unit number (0 to 99, connection possible to 32 Controllers)	0 to 99	0	–	R/W(S)	–	–	–	–	2
	007		Interrupt transfer enable 0: Disable, 1: Enable	0, 1	0	–	R/W(S)	–	–	–	–	1
	008		Baud rate (kbits/s) (0: 1.2, 1:2.4, 2: 4.8, 3: 9.6, 4: 19.2)	0 to 4	3	–	R/W(S)	–	–	–	–	2
Special	009		Controller error level display	0 to 3	See note.	Yes	–	–	–	–	S	2
	010		Response code (response code for commands addressed to ES100X)	0000 to 2714 Hex	See note.	Yes	–	–	–	–	S	2

Data

ITEM TYPE	ITEM	Symbol	Data Description		Data Range	Default	COLD start initialization	R/W Mode R: Read, W: Write, R/W: R/W-enabled, –: R/W-disabled Note: r and r/w: Read and read/write for validate action or monitor run status by CX-Process Tool or Monitor, (S): Initial setting data, (O): Operation data					Data Length (bytes)
								According to CX-Process Tool	According to CX-Process Monitor *1	According to ITEM Setting block	According to Step Ladder Program	Send/ Receive All Blocks	
Parameter	011		Scaling lower limit	Read value from the ES100X	-1999 to 9998	See note.	Yes	–	–	–	–	–	2
	012		Scaling upper limit		-1998 to 9999	See note.	Yes	–	–	–	–	–	2
	014		Scaling decimal point position		0 to 3	See note.	Yes	–	–	–	–	–	2
	021	PV	Process variable		-10.00% to 110.00%	See note.	Yes	r	–	–	–	S	2
	022	SP	Set point		0.00% to 100.00%	See note.	Yes	r	–	–	–	–	2
	023	MV	Manipulated variable		-5.00%to 105.00%	See note.	Yes	r	–	–	–	–	2
	024		Proportional band		0.0% to 999.9%	See note.	Yes	–	–	–	–	S	2
	025		Integral (reset) time		0 to 9999 s	See note.	Yes	–	–	–	–	S	2
	026		Diffrential (rate) time		0 to 9999 s	See note.	Yes	–	–	–	–	S	2
	027		MV upper limit		-4.90% to 105.00%	See note.	Yes	–	–	–	–	S	2
	028		MV lower limit		-5.00% to 104.90%	See note.	Yes	–	–	–	–	S	2
	029	CSP	Current SP setting	LSP or RSP in this block	0.00% to 100.00%	See note.	Yes	r	–	–	–	S	2
Contact output	030	RUN	Operating status display 0: STOP, 1: RUN	Value read from ES100X	0, 1	See note.	Yes	–	–	–	R	S	1
	031	A/M	Auto/manual status display 0: Manual, 1: Auto		0, 1	See note.	Yes	–	–	–	R	S	1
	032	RMT	EX100 parameter setting method 0: Local (front panel keys), 1: Remote (serial communications)		0, 1	See note.	Yes	–	–	–	R	S	1
	033	AT	AT status 0: AT not being executed (including normal end) 1: AT being executed		0, 1	See note.	Yes	–	–	–	R	S	1
Parameter	035		Valid PID group number		1 to 8	See note.	Yes	–	–	–	–	–	2
	038		Deviation output (deviation = PV - SP)	Result calculated in this block	±110.00%	0.00	Yes	–	–	–	–	–	2
	039		Deviation alarm setting	Value set in this block	0% to 110.00%	110.00	–	R/W(O)	–	W	–	S/R	2
	040		PV high/high alarm setting		-10.00% to 110.00%	110.00	–	R/W(O)	–	W	–	S/R	2
	041		PV high alarm setting		-10.00% to 110.00%	100.00	–	R/W(O)	–	W	–	S/R	2
	042		PV low alarm setting		-10.00% to 110.00%	0.00	–	R/W(O)	–	W	–	S/R	2
	043		PV low/low alarm setting		-10.00% to 110.00%	-10.00	–	R/W(O)	–	W	–	S/R	2
	044		Hysteresis setting		0.00% to 110.00%	1.00	–	R/W(S)	–	W	–	–	2
Contact output	045	DVA	Deviation alarm value	Result calculated in this	0, 1	0	Yes	–	–	–	R	S	1
	046	HH	PV high/high alarm value		0, 1	0	Yes	–	–	–	R	S	1

ITEM TYPE	ITEM	Symbol	Data Description		Data Range	Default	COLD start initialization	R/W Mode R: Read, W: Write, R/W: R/W-enabled, –: R/W-disabled Note: r and r/w: Read and read/write for validate action or monitor run status by CX-Process Tool or Monitor, (S): Initial setting data, (O): Operation data					Data Length (bytes)
								According to CX-Process Tool	According to CX-Process Monitor *1	According to ITEM Setting block	According to Step Ladder Program	Send/ Receive All Blocks	
	047	H	PV high alarm value	block	0, 1	0	Yes	–	–	–	R	S	1
	048	L	PV low alarm value		0, 1	0	Yes	–	–	–	R	S	1
	049	LL	PV low/low alarm value		0, 1	0	Yes	–	–	–	R	S	1
Contact input	050	AS	Alarm stop switch 0: Alarm, 1: Stop	Value written to ES100X	0, 1	0	Yes	R/W(O)	–	–	R/W	S/R	1
Analog output	051		MV setting		-5.00% to 105.00%	See note.	Yes	r/w	–	–	–	–	2
Parameter	052		MV upper limit setting		-4.90% to 105.00%	See note.	Yes	R/W(O)	–	W	–	R	2
	053		MV lower limit setting		-5.00% to 104.90%	See note.	Yes	R/W(O)	–	W	–	R	2
Contact output	054	MHA	MV upper limit output 1: Above upper limit Valid only for auto mode (always 0 for manual mode).	Results calculated in this block	0, 1	0	Yes	–	–	–	R	S	1
	055	MLA	MV lower limit output 1: Below lower limit Valid only for auto mode (always 0 for manual mode).		0, 1	0	Yes	–	–	–	R	S	1
Parameter	056		P (proportional band) setting	Value written to ES100X	0.0% to 999.9%	See note.	Yes	R/W(O)	–	W	–	R	2
	057		I (integral time) setting 0: No integral control		0 to 9999 s	See note.	Yes	R/W(O)	–	W	–	R	2
	058		D (differential time) setting 0: No differential control		0 to 9999 s	See note.	Yes	R/W(O)	–	W	–	R	2
Analog input connection information	070		Remote SP source designation	Value set in this block	BBB or III	000000	–	R/W(S)	–	–	–	–	4
Analog input	071		Remote SP input value	Value written to ES100X	0.00% to 100.00%	0.00	Yes	–	–	–	–	–	2
Parameter	072		Local SP setting		0.00% to 100.00%	See note.	Yes	R/W(O)	–	W	–	R	2
Contact input	080	RUN	ES100X operation command 0: Stop, 1: Run		0, 1	See note.	Yes	R/W(O)	–	–	R/W	R	1
	081	A/M	A/M switch 0: Manual, 1: Auto		0, 1	See note.	Yes	R/W(O)	–	–	R/W	R	1
	082	RMT	EX100 parameter setting method switch 0: Local (front panel keys), 1: Remote (serial communications)		0, 1	See note.	Yes	R/W(O)	–	–	R/W	R	1
	083	AT	AT command 0: Stop AT , 1: Execute AT		0, 1	See note.	Yes	R/W(O)	–	–	R/W	R	1
Contact input parameter	084	R/L	RSP/LSP switch in this block 0: Local SP, 1: Remote SP Note: Valid only when ITEM 085 is 1 (RSP/LSP switching enabled).	In this block	0, 1	0	Yes	R/W(O)	–	–	R/W	S/R	1

ITEM TYPE	ITEM	Symbol	Data Description		Data Range	Default	COLD start initialization	R/W Mode R: Read, W: Write, R/W: R/W-enabled, –: R/W-disabled Note: r and r/w: Read and read/write for validate action or monitor run status by CX-Process Tool or Monitor, (S): Initial setting data, (O): Operation data					Data Length (bytes)
								According to CX-Process Tool	According to CX-Process Monitor *1	According to ITEM Setting block	According to Step Ladder Program	Send/ Receive All Blocks	
Parameter	085		SP setting method (default) 0: LSP only, 1: RSP/LSP switching enabled (ITEM 084 will be disabled if "LSP only" is set.)	In this block	0, 1	0	–	R/W(S)	–	–	–	S/R	1
	088		Inverted MV display at host 0: No, 1: Yes Note: Inversion means to take 0% to 100% and convert it to 100% to 0%.		0, 1	0	–	R/W(S)	–	–	–	–	1
	089	MV	MV output for host display		-5.00% to 105.00%	See note.	Yes	R/W(O)	–	W	–	S/R	2
	098		MV manual pointer position		-5.00% to 105.00%	0.00	Yes	R/W(O)	–	W	–	S/R	2
	099		Label		0 to 15	0	Yes	R/W(O)	–	W	–	S/R	2

Note:

•If more than one ES100X Controller is used, only the baud rate (ITEM 008) set in the block with the lowest block address is used. If the baud rate is changed, the new setting will become effective the next time the Loop Controller Unit is restarted.

•When reading the PV or SP from the ES100X, the scaling lower limit (ITEM 011) and scaling upper limit (ITEM 012) will be used to convert the data to between 0.00% and 100.00% in the Loop Control Unit.

When writing data to the ES100X, the scaling lower limit (ITEM 011) and scaling upper limit (ITEM 012) will be used to convert the data from between 0.00% and 100.00% before writing to the ES100X.

When the Loop Controller Unit is started (hot or cold), data is read from the ES100X and used for the initial ITEM settings in the function block instead of using the ITEM settings originally in the function block. This is done for safety. The ITEMs to which this applies are listed as "See note." in the default column in the ITEM table given above.

•ES100X Data Read/Write Timing

Only one ES100X Controller Terminal Block is executed each cycle.

If there are n ES100X Controller Terminal Blocks, each block will be executed only once every n cycles.

1)Reading Data from the ES100X to the Loop Control Unit

Data is read when the ES100X Controller Terminal Block is executed.

2)Writing Data from the Loop Control Unit to the ES100X

•When Interrupt Transfer Enable (ITEM 007) is OFF

Data is written when the ES100X Controller Terminal Block is executed.

•When Interrupt Transfer Enable (ITEM 007) is ON

The ES100X Controller Terminal Block with interrupt transfer enabled will be executed even if another ES100X Controller Terminal Block is scheduled to be executed that cycle. For remote SP setting (with ITEM 084 and ITEM 085 both set to 1), the SP is written to the ES100X only when the ES100X Controller Terminal Block is executed.

•ES100X Data Update Cycle
The ES100X Controller Terminal Block must be executed more than once to read and write all the data for the ES100X.
Approximately one second will be required to update the data for one ES100X Controller when the execution cycle of the function block is 0.1 second. If the execution cycle increases, the update cycle will increase as a multiple of the execution cycle.
If n ES100X Controllers are connected, the time required for each Controller will be approximately n seconds.

•Response Code (ITEM 010)
If communications with the ES100X are normal, a communications command will be sent to the ES100X and the response code that is returned will be indicated.
Refer to the ES100X user's manual for communications for details.

•Controller Error Level Display (Levels 0 to 3, ITEM 009)
The error level of the ES100X classifies errors groups into error levels 0 to 3 for errors read by sending the variable read command to the ES100X.
0: No error
1: Group 0 or 1 (calibration data error, internal voltage error, etc.)
2: Groups 2 and 3 (PV errors, etc.)
3: Group 9 (motor calibration setting error, etc.)
Refer to the ES100X user's communications manual for details.

Execution Error Table

Code	Name	Description	Action when error occurs	Measure to be taken
29	External device reception error	A communications frame error has occurred in the data received from the ES100X for the ES100X Controller Terminal Block. (Either an FCS check error or frame error occurred three times in a row.)	Communications with the ES100X stopped and communications with another ES100X attempted.	Check the communications path. Check the communications settings: Data length of 7 bits, even parity, and two stop bits.
30	Response timeout	A response is not returned for data sent to the Controller for an ES100X Controller Terminal Block. (A response was not received for 5 seconds three times.)	Communications with the ES100X stopped and communications with another ES100X attempted.	Check the communications path. Check the communications settings: Data length of 7 bits, even parity, and two stop bits. Check the restrictions for the ES100X (e.g., parameter setting mode).
31	Controller unit number duplication	The unit number (ITEM 006) of the Controller to communicate with in the ES100X Controller Terminal Block is the same as the unit number in another ES100X Controller Terminal Block. A timeout error (30) will occur if the specified unit number is not set for any ES100X Controller.	Communications with the ES100X are stopped.	Set the unit numbers (ITEM 006) so that each number is set for only one ES100X Controller.

Hardware Connections to ES100X Controllers

1:1 Connections between Loop Control Unit and ES100X via RS-232C

System Configuration

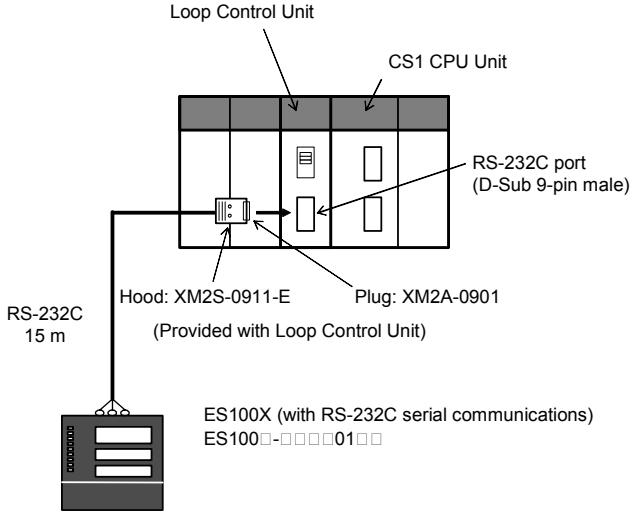

Wiring

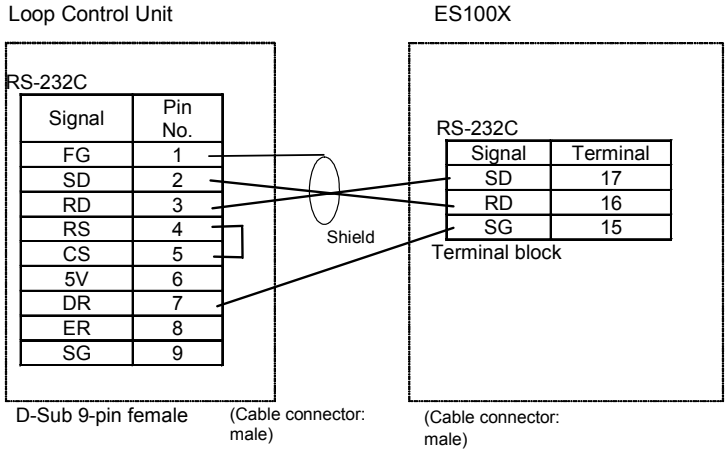

Recommended RS-232C Cables

UL2464 AWG28 x 5P IFS-RVV-SB (UL-conforming product) (Fujikura)
AWG28x5P IFVV-SB (not UL-conforming product)
UL2464-SB(MA)5Px28AWG(7/0.127) (UL-conforming product) (Hitachi)
CO-MA-VV-SB 5Px28AWG(7/0.127) (not UL-conforming product)

Applicable Connectors

RS-232C 9-pin Connector for Loop Control Unit

Name	Model number	Specifications	
Plug	XM2A-0901	9-pin, male	Used together. (One connector included with Loop Control Unit)
Hood	XM2S-0911-E	For 9-pin connector, mini screws	

1:N Connections between Loop Control Unit and ES100X Controllers via RS-232C/RS-485 Conversion (N = 1 to 31)

System Configuration

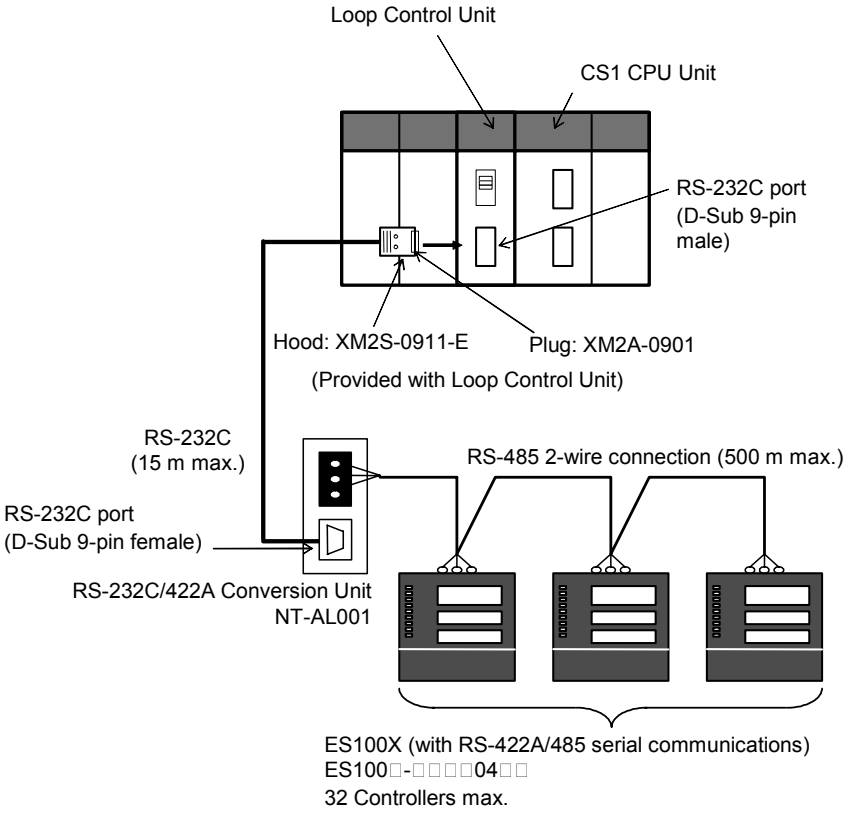

Wiring

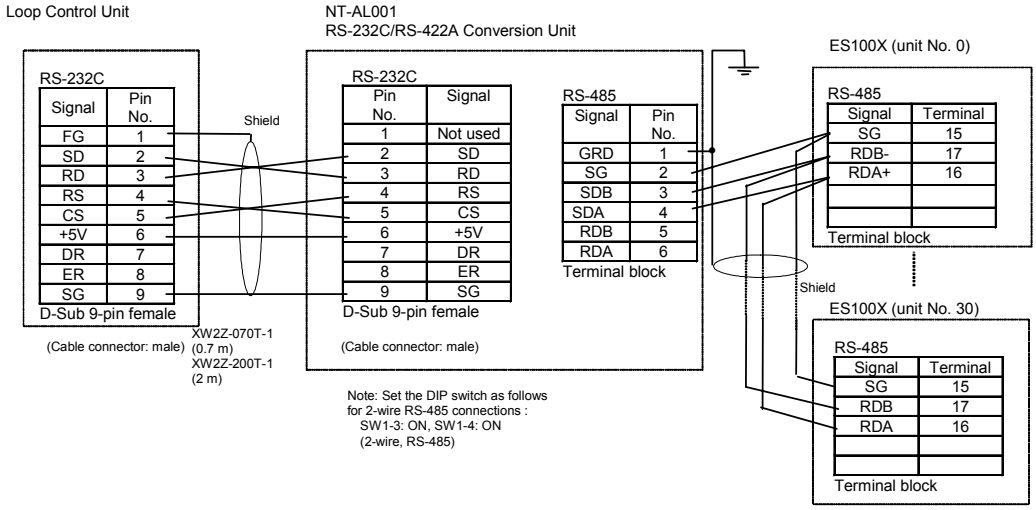

Note:

Do not connect pin 6 (+5 V) on the RS-232C port on the Loop Control Unit to any device other than the NT-AL001. The external device or the Loop Control Unit may be damaged.
Set the 2-wire/4-wire setting on the NT-AL001 to a 2-wire connection (RS-485).
Set the DIP switch as shown below.
SW1-3: ON, SW1-4: ON (2-wire, RS-485)

Recommended RS-232C Cables between Loop Control Unit and NT-AL001

Name	Model number	Length
NT-AL001 Connecting Cables	XW2Z-070T-1	0.7 m
	XW2Z-200T-1	2.0 m

Applicable Connector

The RS-232C 9-pin Connector on the Loop Control and the NT-AL001 is listed in the following table.

Name	Model number	Specifications	
Plug	XM2A-0901	9-pin, male	Used together. (One connector included with Loop Control Unit)
Hood	XM2S-0911-E	For 9-pin connector, mini screws	

Recommended RS-485 Cable

CO-HC-ESV-3Px7/0.2(Hirakawa-Huddic)

List of tag ITEMs on SCADA software

The following tag ITEMs are used to specify ITEMs with CSV tags from SCADA software when sending/receiving data to/from the CPU Unit using Receive All Blocks (model 461)/Send All Blocks (model 462). All tag ITEMs are fixed and cannot be changed.

ITEM	Data Name	CSV Tags in SCADA Software
		Tag ITEM (Fixed)
000	Stop block operation command	MT_ST
003	Execution error display	ERR
009	Controller error level display	ERR1
010	Response code	RES
021	PV measured value	PV
024	P (proportional band)	P
025	I (integral time)	I
026	D (differential time)	D
027	MV upper limit	MH
028	MV lower limit	ML
029	SP (setting)	SP
030	Operating status display	RUN
031	A/M status display	A/M_SW
032	ES100X parameter setting mode	RMT
033	AT status	AT
039	Deviation alarm setting	DVA_SP
040	PV high/high alarm setting	HH_SP
041	PV high alarm setting	H_SP
042	PV high alarm setting	L_SP
043	PV low/low alarm setting	LL_SP
045	Deviation alarm setting	DVA
046	PV high/high alarm value	HH
047	PV high alarm value	H
048	PV low alarm value	L
049	PV low/low alarm value	LL
050	Alarm stop switch	AOF
052	MV upper limit	MH
053	MV lower limit	ML
054	MV upper limit output	MHA
055	MV lower limit output	MLA
056	P (proportional band)	P
057	I (integral time)	I
058	D (differential time)	D
072	SP (setting)	SP
080	ES100X operation command	RUN
081	A/M switch	A/M_SW
082	ES100X parameter setting mode	RMT
083	AT command	AT
084	RSP/LSP switch in this block	R/L_SW
085	SP setting method	CAS_SET
089	Manipulated output value	MV
098	MV manual pointer position	MV_IDX
099	Label	OP_MK

Block Model	Block Name	Block Address
<110>	4-Point Warning Indicator	100 to 349

Outline

This function block is a PV indicator with four alarm points.
•This function is provided with four PV alarm outputs (high/high, high, low, and low/low).
•This function block provides the same function as the Indicator block (model 034).

Function block applications

This function block is allocated to block addresses 100 to 349 as an Operation Block. The Indicator block (model 034) is allocated to block addresses 001 to 032 as a Control Block.)
Block model 110 can be used when reading/writing using standard SCADA software when the maximum number of Control Blocks (32) have already been used.
Note:This function block cannot be used as the destination of 1-Block Send Terminal to Computer (model 403) or 4-Block Send Terminal to Computer (model 404). Use the Indicator block (model 034) when the block is going to be used in the CX-Process Monitor software.

Block diagram

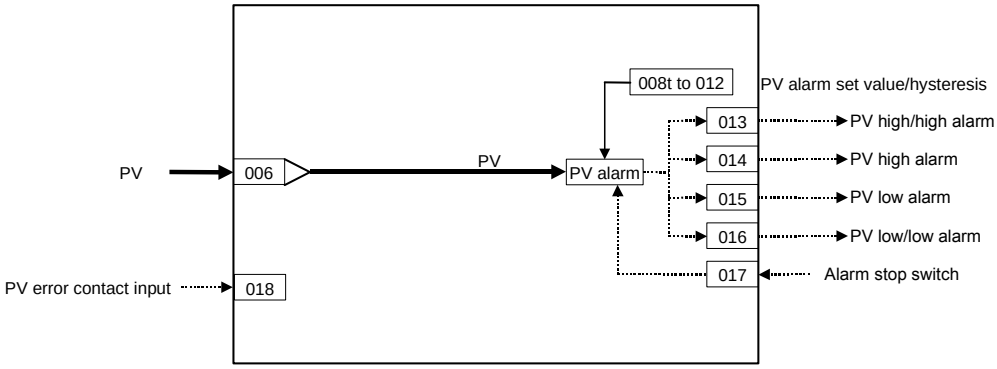

ITEM list

*1:On the CX-Process Monitor, the R/W mode is indicated in the Tuning screen or in the Control screen.

ITEM TYPE	ITEM	Symbol	Data Description	Data Range	Default	COLD start initialization	R/W Mode R: Read, W: Write, R/W: R/W-enabled, -: R/W-disabled Note: r and r/w: Read and read/write for validate action or monitor run status by CX-Process Tool or Monitor, (S): Initial setting data, (O): Operation data					Data Length (bytes)
							According to CX-Process Tool	According to CX-Process Monitor *1	According to ITEM Setting block	According to Step Ladder Program	Send/ Receive All Blocks	
Contact input	000		Stop block operation command 0: Cancel stop, 1: Stop	0, 1	0	–	–	–	–	–	S/R	1
Parameter	001		Comment	23 characters	Block name	–	R/W(S)	–	–	–	–	24
	002		Block model: 4-Point Warning Indicator	110	110	–	R/W(S)	–	–	–	–	2
Special	003		Execution error display 0: Normal, Other: error (See Appendix “Execution Error Code List.”)		0000	–	r	–	–	–	S	2
Parameter	004		Operation cycle (seconds) 0: Common, 1: 01, 2: 0.2, 3: 0.5, 4: 1, 5: 2	0 to 5	0	–	R/W(S)	–	–	–	–	2
Analog input connection information	006		PV source designation BBB: Block address, III: ITEM number	BBB or III	000000	–	R/W(S)	–	–	–	–	4
Analog input	007	PV	PV input	-15.00% to 115.00%	0.00	Yes	r	–	–	–	S	2
Parameter	008		High/high alarm setting	-15.00% to 115.00%	115.00	–	R/W(O)	–	W	–	S/R	2
	009		High alarm setting	-15.00% to 115.00%	100.00	–	R/W(O)	–	W	–	S/R	2
	010		Low alarm setting	-15.00% to 115.00%	0.00	–	R/W(O)	–	W	–	S/R	2
	011		Low/low alarm setting	-15.00% to 115.00%	-15.00	–	R/W(O)	–	W	–	S/R	2
	012		Hysteresis setting	0% to 115.00%	1.00	–	R/W(S)	–	W	–	–	2
Contact output	013	HH	High/high alarm output	0, 1	0	Yes	–	–	–	R	S	1
	014	H	High alarm output	0, 1	0	Yes	–	–	–	R	S	1
	015	L	Low alarm output	0, 1	0	Yes	–	–	–	R	S	1
	016	LL	Low/low alarm output	0, 1	0	Yes	–	R	–	R	S	1
Contact input Parameter	017	S1	Alarm stop switch 0: Alarm, 1: Stop	0, 1	0	Yes	R/W(O)	–	–	R/W	S/R	1
Source designation contact input	018		PV error contact source designation	BBB or III	000000	–	–	–	–	–	–	4
Contact output	019		PV error display 0: Normal, 1: Error	0, 1	0	Yes	–	–	–	–	S	1
Parameter	020		Alarm limit*2 0: No, 1: Yes Note: Limits the alarm set value to between 0.00% and 100.00%.	0, 1	0	–	R/W (S)	–	–	–	–	1

*1: If ITEM 020 (alarm limit) it set to 1 (ON), the alarm set range will be limited to between 0.00% and 100.00% as follows (supported by Loop Control Unit version 2.50 or later):

- If the high/high alarm setting (ITEM 008) or the high alarm set value (ITEM 009) is set to a value over 100.00%, the alarm output will not turn ON even if the PV exceeds the alarm set value.
- If the low/low alarm setting (ITEM 011) or the low alarm set value (ITEM 010) is set to a value below 0.00%, the alarm output will not turn ON even if the PV exceeds the alarm set value.

Data for host display

*1:On the CX-Process Monitor, the R/W mode is indicated in the Tuning screen or in the Control screen.

ITEM TYPE	ITEM	Symbol	Data Description	Data Range	Default	COLD start initialization	R/W Mode R: Read, W: Write, R/W: R/W-enabled, -: R/W-disabled Note: r and r/w: Read and read/write for validate action or monitor run status by CX-Process Tool or Monitor, (S): Initial setting data, (O): Operation data					Data Length (bytes)
							According to CX-Process Tool	According to CX-Process Monitor *1	According to ITEM Setting block	According to Step Ladder Program	Send/ Receive All Blocks	
Parameter	099		Label	0 to 15	0	Yes	R/W(O)	–	W	–	S/R	2

List of tag ITEMs on SCADA software

The following tag ITEMs are used to specify ITEMs with CSV tags from SCADA software when sending/receiving data to/from the CPU Unit using Receive All Blocks (model 461)/Send All Blocks (model 462). All tag ITEMs are fixed and cannot be changed.

ITEM	Data Name	CSV Tags in SCADA Software
		Tag ITEM (Fixed)
000	Stop block operation command	MT_ST
003	Execution error display	ERR
007	PV input	PV
008	High/high alarm setting	HH_SP
009	High alarm setting	H_SP
010	Low alarm setting	L_SP
011	Low/low alarm setting	LL_SP
013	High/high alarm output	HH
014	High alarm output	H
015	Low alarm output	L
016	Low/low alarm output	LL
017	Alarm stop switch	AOF
019	PV error display	PV_ABN
099	Label	OP_MK

Block Model	Block Name	Block Address
<111>	High/Low Alarm	100 to 349

Outline

This function block provides the alarm contact outputs for the high and low limits of single analog outputs.

•High and low limits have hysteresis.
•The high limit can be set to a value lower than the low limit.

Block diagram

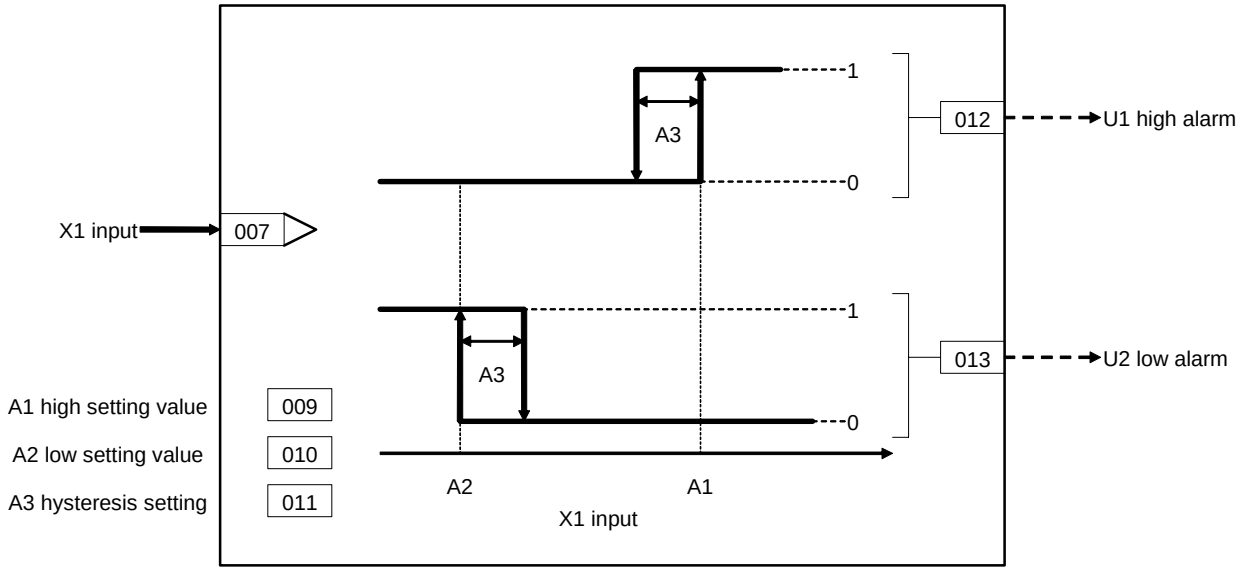

ITEM list

*1:On the CX-Process Monitor, the R/W mode is indicated in the Tuning screen or in the Control screen.

ITEM TYPE	ITEM	Symbol	Data Description	Data Range	Default	COLD start initialization	R/W Mode R: Read, W: Write, R/W: R/W-enabled, -: R/W-disabled Note: r and r/w: Read and read/write for validate action or monitor run status by CX-Process Tool or Monitor, (S): Initial setting data, (O): Operation data					Data Length (bytes)
							According to CX-Process Tool	According to CX-Process Monitor *1	According to ITEM Setting block	According to Step Ladder Program	Send/ Receive All Blocks	
Contact input	000		Stop block operation command (0: Cancel stop, 1: Stop)	0, 1	0	–	–	–	–	–	S/R	1
Parameter	001		Comment	23 characters	Block name	–	R/W(S)	–	–	–	–	24
	002		Block Model: High/Low alarm	111	111	–	R/W(S)	–	–	–	–	2
Special	003		Execution error display 0: Normal, Other: Error (See Appendix "Execution Error Code Tables.")		0000	–	r	–	–	–	S	2
Parameter	004		Operation cycle cycle (sec) 0: Common, 1: 0.1, 2: 0.2, 3: 0.5, 4: 1, 5: 2	0 to 5	0	–	R/W(S)	–	–	–	–	2
Analog input connection information	007		X1 source designation BBB: Block address, III: ITEM No.	BBBIII	000000	–	R/W(S)	–	–	–	–	4
Analog input	008	X1	Input	±320.00%		Yes	r	R	–	–	S	2
Parameter	009	A1	High setting	±320.00%	320.00	–	R/W(O)	R/W	W	–	S/R	2
	010	A2	Low setting	±320.00%	-320.00	–	R/W(O)	R/W	W	–	S/R	2
	011	A3	Hysteresis setting	0 to 320.00%	1.00	–	R/W(S)	–	W	–	S/R	2
Contact output	012	U1	High alarm output	0, 1	0	Yes	–	R	–	R	S	1
	013	U2	Low alarm output	0, 1	0	Yes	–	R	–	R	S	1

List of tag ITEMs on CX-Process Monitor or SCADA software

The following tag ITEMs are used to specify ITEMs with either 1) Monitor tags when sending function blocks to the CX-Process Monitor from 4-Block Send Terminal to Computer (Block Model 404) or 2) CSV tags from SCADA software when sending/receiving data to/from the CPU Unit using Receive All Blocks (Block Model 461)/Send All Blocks (Block Model 462). All tag ITEMs are fixed and cannot be changed.

ITEM	Data Name	CSV Tags in CX-Process Monitor	CSV Tags in SCADA Software
		Tag ITEM (fixed)	Tag ITEM (fixed)
000	Stop block operation command	MT_ST	MT_ST
003	Execution error display	None	ERR
008	Input	PV	PV
009	High setting	H_SP	H_SP
010	Low setting	L_SP	L_SP
011	Hysteresis setting	None	A3
012	High alarm output	H	H
013	Low alarm output	L	L

Note This function block cannot be sent using 1-Block Send Terminal to Computer (Block Model 403).

Block Model	Block Name	Block Address
<112>	Deviation Alarm	100 to 349

Outline

This function block provides the alarm contact outputs for the deviation of two analog signals.
The deviation high alarm output changes to 1 (turns ON) when "X2 input - X1 reference input" is at or higher than the deviation high setting. The deviation low alarm output changes to 1 (turns ON) when "X1 input – X2 reference input" is at or lower than the deviation low setting.

•The deviation high and low limits have hysteresis.
•The deviation high limit can be set to a value lower than the deviation low limit.

Block diagram

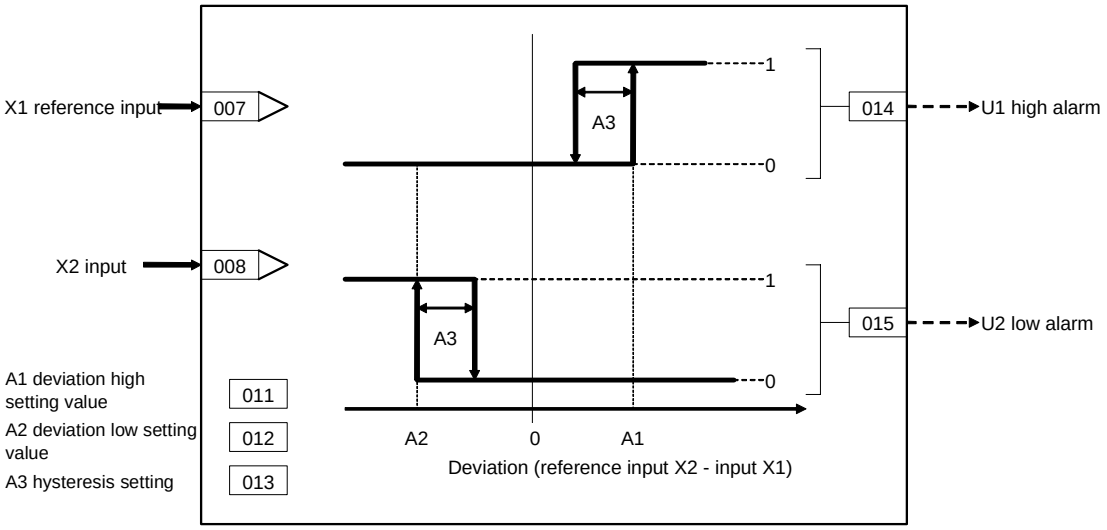

ITEM list

*1:On the CX-Process Monitor, the R/W mode is indicated in the Tuning screen or in the Control screen.

ITEM TYPE	ITEM	Symbol	Data Description	Data Range	Default	COLD start initialization	R/W Mode R: Read, W: Write, R/W: R/W-enabled, -: R/W-disabled Note: r and r/w: Read and read/write for validate action or monitor run status by CX-Process Tool or Monitor, (S): Initial setting data, (O): Operation data					Data Length (bytes)
							According to CX-Process Tool	According to CX-Process Monitor *1	According to ITEM Setting block	According to Step Ladder Program	Send/ Receive All Blocks	
Contact input	000		Stop block operation command (0: Cancel stop, 1: Stop)	0, 1	0	–	–	–	–	–	S/R	1
Parameter	001		Comment	23 characters	Block name	–	R/W(S)	–	–	–	–	24
	002		Block Model: Deviation Alarm	112	112	–	R/W(S)	–	–	–	–	2
Special	003		Execution error display 0: Normal, Other: Error (See Appendix "Execution Error Code Tables.")		0000	–	r	–	–	–	S	2
Parameter	004		Operation cycle (sec) 0: Common, 1: 0.1, 2: 0.2, 3: 0.5, 4: 1, 5: 2	0 to 5	0	–	R/W(S)	–	–	–	–	2
Analog input connection information	007		X1 source designation BBB: Block address, III: ITEM No.	BBBIII	000000	–	R/W(S)	–	–	–	–	4
	008		X2 source designation BBB: Block address, III: ITEM No.	BBBIII	000000	–	R/W(S)	–	–	–	–	4
Analog input	009	X1	Reference input	±320.00%	0.00	Yes	r	–	–	–	S	2
	010	X2	Input	±320.00%	0.00	Yes	r	–	W	–	S	2
Parameter	011	A1	Deviation high setting	±320.00%	320.00	–	R/W(O)	–	W	–	S/R	2
	012	A2	Deviation low setting	±320.00%	-320.00	–	R/W(O)	–	W	–	S/R	2
	013	A3	Hysteresis setting	0 to 320.00%	1.00	–	R/W(S)	–	W	–	S/R	2
Contact output	014	U1	Deviation high alarm output	0, 1	0	Yes	–	–	–	R	S	1
	015	U2	Deviation low alarm output	0, 1	0	Yes	–	–	–	R	S	1

List of tag ITEMs on SCADA software

The following tag ITEMs are used to specify ITEMs with CSV tags from SCADA software when sending/receiving data to/from the CPU Unit using Receive All Blocks (model 461)/Send All Blocks (model 462). All tag ITEMs are fixed and cannot be changed.

ITEM	Data Name	CSV Tags in SCADA Software
		Tag ITEM (fixed)
000	Stop block operation command	MT_ST
003	Execution error display	ERR
009	Reference input	X1
010	Input	X2
011	Deviation high setting	A1
012	Deviation low setting	A2
013	Hysteresis setting	A3
014	Deviation high alarm output	U1
015	Deviation low alarm output	U2

Block Model	Block Name	Block Address
<113>	Rate-of-change Operation and Alarm	100 to 349

Outline

This function block provides the alarm contact outputs for the high and low limits of rate-of-change operation when the analog signal rate-of-change is output.
By how many percent (%) X1 input changes per second, minute or hour is output as the rate-of-change. Judgment of the change in alarm signal is performed by comparing the value of X1 input with the data of H x N seconds previous currently held in memory.
U1 output changes to 1 (turns ON) if X1 is greater than A1 positive direction alarm setting.
U2 output changes to 1 (turns ON) if X1 is greater than A2 negative direction alarm setting.
Each of the alarm settings has A3 hysteresis.

Block diagram

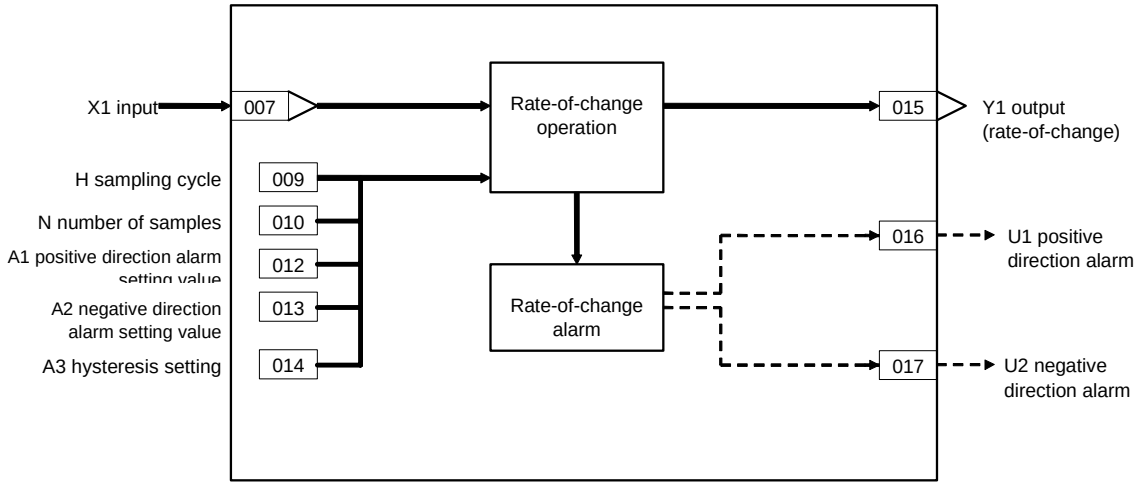

ITEM list

*1:On the CX-Process Monitor, the R/W mode is indicated in the Tuning screen or in the Control screen.

ITEM TYPE	ITEM	Symbol	Data Description	Data Range	Default	COLD start initialization	R/W Mode R: Read, W: Write, R/W: R/W-enabled, -: R/W-disabled Note: r and r/w: Read and read/write for validate action or monitor run status by CX-Process Tool or Monitor, (S): Initial setting data, (O): Operation data					Data Length (bytes)
							According to CX-Process Tool	According to CX-Process Monitor *1	According to ITEM Setting block	According to Step Ladder Program	Send/ Receive All Blocks	
Contact input	000		Stop block operation command (0: Cancel stop, 1: Stop)	0, 1		–	–	–	–	–	S/R	1
Parameter	001		Comment	23 characters	Block name	–	R/W(S)	–	–	–	–	24
	002		Block Model: Rate-of-change Operation and Alarm	113	113	–	R/W(S)	–	–	–	–	2
Special	003		Execution error display 0: Normal, Other: Error (See Appendix "Execution Error Code Tables.")		0000	–	r	–	–	–	S	2
Parameter	004		Operation cycle (sec) 1: 0.1, 2: 0.2, 3: 0.5, 4: 1	0 to 4	4	–	R/W(S)	–	–	–	–	2
Analog input connection information	007		X1 source designation BBB: Block address, III: ITEM No.	BBBIII	000000	–	R/W(S)	–	–	–	–	4
Analog input	008	X1	Input	±320.00%	0.00	Yes	r	–	–	–	S	2
Parameter	009	H	Sampling cycle (0: Operation cycle)	0 to 320s	0	–	R/W(S)	–	W	–	S/R	2
	010	N	Number of samples	1 to 8	8	–	R/W(S)	–	W	–	S/R	1
	011		Unit (0:%/s, 1:%/min, 2:%/h)	0 to 2	0	–	R/W(S)	–	–	–	S/R	1
	012	A1	Positive direction alarm setting	0 to 320.00	320.00	–	R/W(O)	–	W	–	S/R	2
	013	A2	Negative direction alarm setting	0 to 320.00	320.00	–	R/W(O)	–	W	–	S/R	2
	014	A3	Hysteresis setting	0 to 320.00	1.00	–	R/W(S)	–	W	–	S/R	2
Analog output	015	Y1	Output rate-of-change	±320.00%	0.00	Yes	r/w	–	–	–	S	2
Contact output	016	U1	Positive direction alarm output	0, 1	0	Yes	–	–	–	R	S	1
	017	U2	Negative direction alarm output	0, 1	0	Yes	–	–	–	R	S	1

List of tag ITEMs on SCADA software

The following tag ITEMs are used to specify ITEMs with CSV tags from SCADA software when sending/receiving data to/from the CPU Unit using Receive All Blocks (model 461)/Send All Blocks (model 462). All tag ITEMs are fixed and cannot be changed.

ITEM	Data Name	CSV Tags in SCADA Software
		Tag ITEM (fixed)
000	Stop block operation command	MT_ST
003	Execution error display	ERR
008	Input	X1
009	Sampling cycle	H
010	Number of samples	N
011	Unit	TM
012	Positive direction alarm setting	A1
013	Negative direction alarm setting	A2
014	Hysteresis setting	A3
015	Output rate-of-change	Y1
016	Positive direction alarm output	U1
017	Negative direction alarm output	U2

Block Model	Block Name	Block Address
<115>	High/Low Limit	100 to 349

Outline

This function block limits the high and low limits of single analog signals.

Block diagram

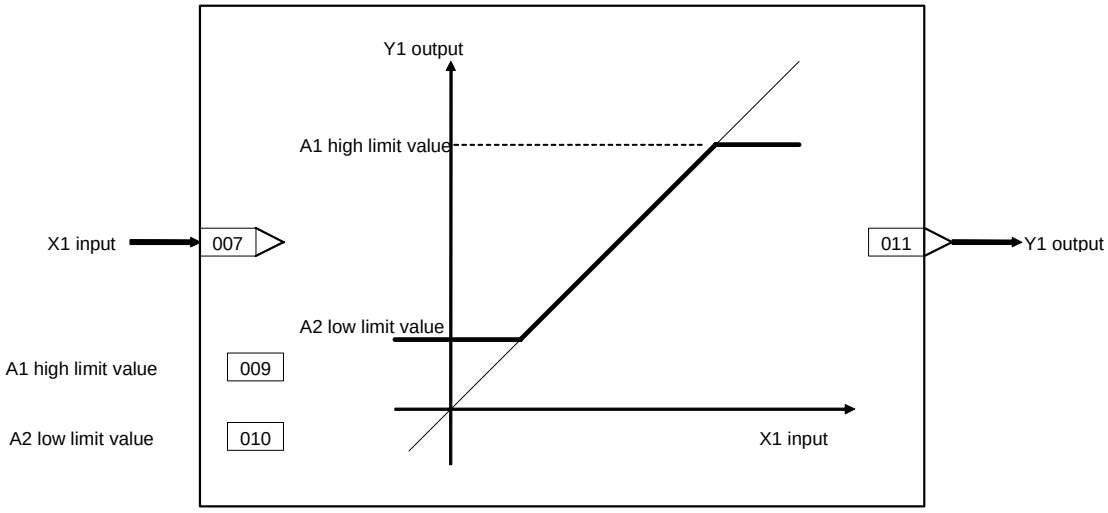

ITEM list

*1:On the CX-Process Monitor, the R/W mode is indicated in the Tuning screen or in the Control screen.

ITEM TYPE	ITEM	Symbol	Data Description	Data Range	Default	COLD start initialization	R/W Mode R: Read, W: Write, R/W: R/W-enabled, -: R/W-disabled Note: r and r/w: Read and read/write for validate action or monitor run status by CX-Process Tool or Monitor, (S): Initial setting data, (O): Operation data					Data Length (bytes)
							According to CX-Process Tool	According to CX-Process Monitor *1	According to ITEM Setting block	According to Step Ladder Program	Send/ Receive All Blocks	
Contact input	000		Stop block operation command (0: Cancel stop, 1: Stop)	0, 1	0	–	–	–	–	–	S/R	1
Parameter	001		Comment	23 characters	Block name	–	R/W(S)	–	–	–	–	24
	002		Model name: High/Low Limit	115	115	–	R/W(S)	–	–	–	–	2
Special	003		Execution error display 0: Normal, Other: Error (See Appendix "Execution Error Code Tables.")		0000	–	r	–	–	–	S	2
Parameter	004		Operation cycle (sec) 0: Common, 1: 0.1, 2: 0.2, 3: 0.5, 4: 1, 5: 2	0 to 5	0	–	R/W(S)	–	–	–	–	2
Analog input connection information	007		X1 source designation BBB: Block address, III: ITEM No.	BBBIII	000000	–	R/W(S)	–	–	–	–	4
Analog input	008	X1	Input	±320.00%	0.00	Yes	r	–	–	–	S	2
Parameter	009	A1	High limit	±320.00%	320.00	–	R/W(O)	–	W	–	S/R	2
	010	A2	Low limit	±320.00%	-320.00	–	R/W(O)	–	W	–	S/R	2
Analog output	011	Y1	Output	±320.00%	0.00	Yes	r/w	–	–	–	S	2

List of tag ITEMs on SCADA software

The following tag ITEMs are used to specify ITEMs with CSV tags from SCADA software when sending/receiving data to/from the CPU Unit using Receive All Blocks (model 461)/Send All Blocks (model 462). All tag ITEMs are fixed and cannot be changed.

ITEM	Data Name	CSV Tags in SCADA Software
		Tag ITEM (fixed)
000	Stop block operation command	MT_ST
003	Execution error display	ERR
008	Input	X1
009	High limit	A1
010	Low limit	A2
011	Output	Y1

Block Model	Block Name	Block Address
<116>	Deviation Limit	100 to 349

Outline

This function block calculates the deviation (X2 - X1) between two analog signals, limits the deviation within than range, and outputs that value.

Block diagram

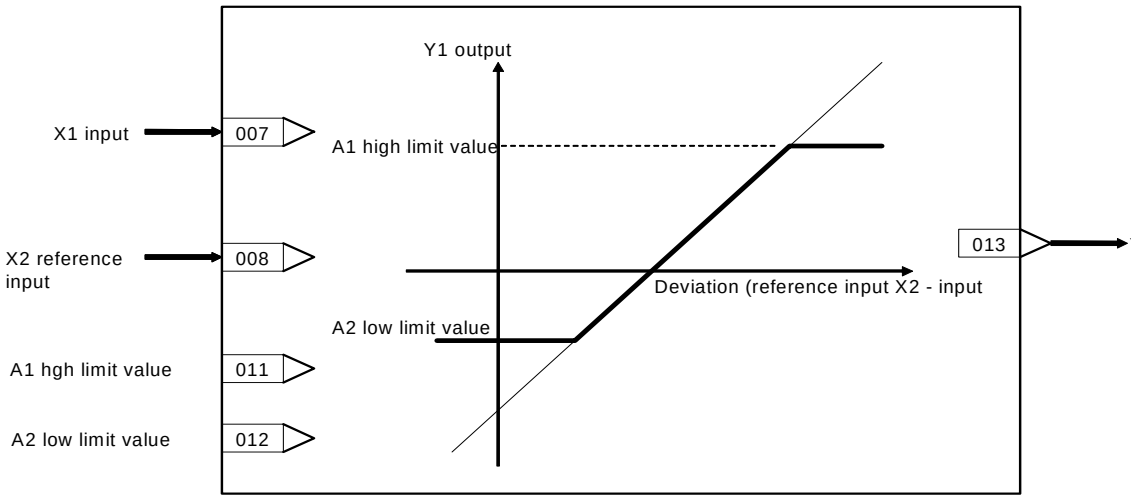

ITEM list

*1:On the CX-Process Monitor, the R/W mode is indicated in the Tuning screen or in the Control screen.

ITEM TYPE	ITEM	Symbol	Data Description	Data Range	Default	COLD start initialization	R/W Mode R: Read, W: Write, R/W: R/W-enabled, -: R/W-disabled Note: r and r/w: Read and read/write for validate action or monitor run status by CX-Process Tool or Monitor, (S): Initial setting data, (O): Operation data					Data Length (bytes)
							According to CX-Process Tool	According to CX-Process Monitor *1	According to ITEM Setting block	According to Step Ladder Program	Send/ Receive All Blocks	
Contact input	000		Stop block operation command (0: Cancel stop, 1: Stop)	0, 1	0	–	–	–	–	–	S/R	1
Parameter	001		Comment	23 characters	Block name	–	R/W(S)	–	–	–	–	24
	002		Block Model: Deviation Limit	116	116	–	R/W(S)	–	–	–	–	2
Special	003		Execution error display 0: Normal, Other: Error (See Appendix "Execution Error Code Tables.")		0000	–	r	–	–	–	S	2
Parameter	004		Operation cycle (sec) 0: Common, 1: 0.1, 2: 0.2, 3: 0.5, 4: 1, 5: 2	0 to 5	0	–	R/W(S)	–	–	–	–	2
Analog input connection information	007		X1 source designation BBB: Block address, III: ITEM No.	BBBIII	000000	–	R/W(S)	–	–	–	–	4
	008		X2 source designation BBB: Block address, III: ITEM No.	BBBIII	000000	–	R/W(S)	–	–	–	–	4
Analog input	009	X1	Input	±320.00%	0.00	Yes	r	–	–	–	S	2
	010	X2	Reference input	±320.00%	0.00	Yes	r	–	–	–	S	2
Parameter	011	A1	High deviation limit	±320.00%	320.00	–	R/W(O)	–	W	–	S/R	2
	012	A2	Low deviation limit	±320.00%	-320.00	–	R/W(O)	–	W	–	S/R	2
Analog output	013	Y1	Output	±320.00%	0.00	Yes	r/w	–	–	–	S	2

List of tag ITEMs on SCADA software

The following tag ITEMs are used to specify ITEMs with CSV tags from SCADA software when sending/receiving data to/from the CPU Unit using Receive All Blocks (model 461)/Send All Blocks (model 462). All tag ITEMs are fixed and cannot be changed.

ITEM	Data Name	CSV Tags in SCADA Software
		Tag ITEM (Fixed)
000	Stop block operation command	MT_ST
003	Execution error display	ERR
009	Input	X1
010	Reference input	X2
011	High deviation limit	A1
012	Low deviation limit	A2
013	Output	Y1

Block Model	Block Name	Block Address
<118>	Analog Signal Hold	100 to 349

Outline

This function block holds the maximum, minimum or instantaneous value of single analog signals, and outputs that value.

•The maximum value is held and output.
•The minimum value is held and output.
•The instantaneous value is held and output.
•This function block has a reset switch for resetting held values.

When the hold mode is set to instantaneous value, the instantaneous value when S1 reset switch changes from 1 (ON) to 0 (OFF) is held and output to Y1.
When the hold mode is set to either maximum value or minimum value, the maximum value or minimum value is held and output to Y1 when S1 reset switch is 0 (OFF).
When S1 is set to 1 (ON), the value is not held.
When S1 reset switch is set to 1 (ON), X1 input equals Y1 output.

Note: When a cold start is performed, the values that were held before CPU Unit output OFF or before running of the Loop Control Unit was stopped are cleared from memory. These values are held when a hot start is performed.

Function block applications

Peak hold or hold at fall of contact state

Block diagram

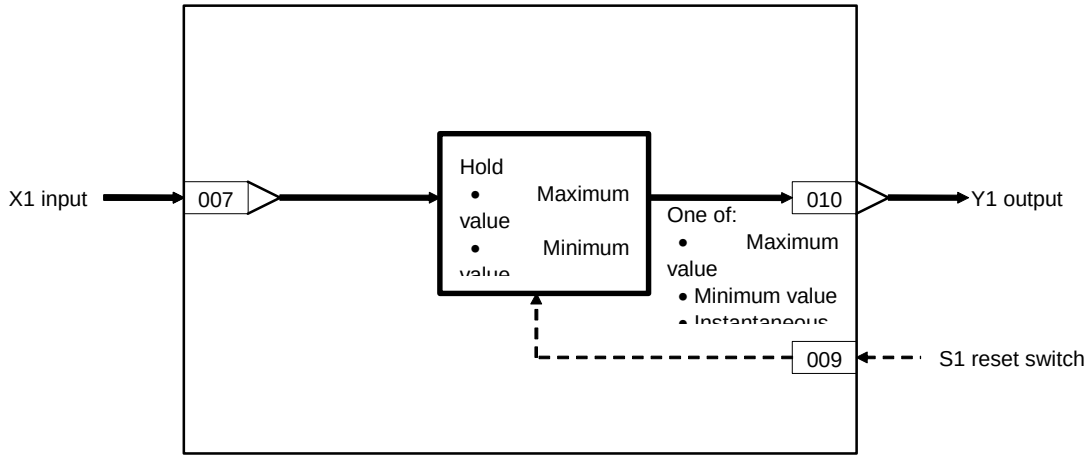

ITEM list

*1:On the CX-Process Monitor, the R/W mode is indicated in the Tuning screen or in the Control screen.

ITEM TYPE	ITEM	Symbol	Data Description	Data Range	Default	COLD start initialization	R/W Mode R: Read, W: Write, R/W: R/W-enabled, -: R/W-disabled Note: r and r/w: Read and read/write for validate action or monitor run status by CX-Process Tool or Monitor, (S): Initial setting data, (O): Operation data					Data Length (bytes)
							According to CX-Process Tool	According to CX-Process Monitor *1	According to ITEM Setting block	According to Step Ladder Program	Send/ Receive All Blocks	
Contact input	000		Stop block operation command (0: Cancel stop, 1: Stop)	0, 1	0	–	–	–	–	–	S/R	1
Parameter	001		Comment	23 characters	Block name	–	R/W(S)	–	–	–	–	24
	002		Block Model: Analog Signal Hold	118	118	–	R/W(S)	–	–	–	–	2
Special	003		Execution error display 0: Normal, Other: Error (See Appendix "Execution Error Code Tables.")		0000	–	r	–	–	–	S	2
Parameter	004		Operation cycle (sec) 1: 0.1, 2: 0.2, 3: 0.5, 4: 1	1 to 4	4	–	R/W(S)	–	–	–	–	2
	006		Hold mode (1: Maximum value, 2: Instantaneous value, 3: Minimum value)	1 to 3	2	–	R/W(S)	–	–	–	S/R	1
Analog input connection information	007		X1 source designation (BBB: Block address, III: ITEM No.)	BBBIII	000000	–	R/W(S)	–	–	–	–	4
Analog input	008	X1	Input	±320.00%	0.00	Yes	r	–	–	–	S	2
Contact input/ parameter	009	S1	Reset switch Contact inputs and parameters are reset when set to 1. When the switch setting changes to 0 from 1 when ITEM006 is set to 2, inputs and parameters are held. When ITEM006 is set to either 1 or 3, contacts and parameters are held when the switch setting is 1 and are not held when the switch setting is 0.	0, 1	0	Yes	R/W(O)	–	–	R/W	S/R	1
Analog output	010	Y1	Output	±320.00%	0.00	Yes	r/w	–	–	–	S	2

List of tag ITEMs on SCADA software

The following tag ITEMs are used to specify ITEMs with CSV tags from SCADA software when sending/receiving data to/from the CPU Unit using Receive All Blocks (model 461)/Send All Blocks (model 462). All tag ITEMs are fixed and cannot be changed.

ITEM	Data Name	CSV Tags in SCADA Software
		Tag ITEM (fixed)
000	Stop block operation command	MT_ST
003	Execution error display	ERR
006	Hold mode	KN
008	Input	X1
009	Reset switch	S1
010	Output	Y1

Block Model	Block Name	Block Address
<121>	Addition or Subtraction	100 to 349

Outline

This function block performs addition/subtraction with gain and bias on up to four analog signals.

Y1 = K1 x X1 + K2 x X2 + K3 x X3 + K4 x X4 + A1

•Internal operation is executed at double precision (32 bits).

Note: Calculate 100% in the calculation formula as 1.0.
Example: If X1 = 20%, X2 = -10%, X3 = 70%, X4 = -30%, K1 = 1.0, K2 = 5.0, K3 = 0.5, K4 = -0.5, and A1 = -40%,
Y1 = {1.0 x 0.2 + 5.0 x (-0.1) + 0.5 x 0.7 + (-0.5) x (-0.3) - 0.4} x 100%
= {0.2 - 0.5 + 0.35 + 0.15 - 0.4} x 100%
= -20%

Block diagram

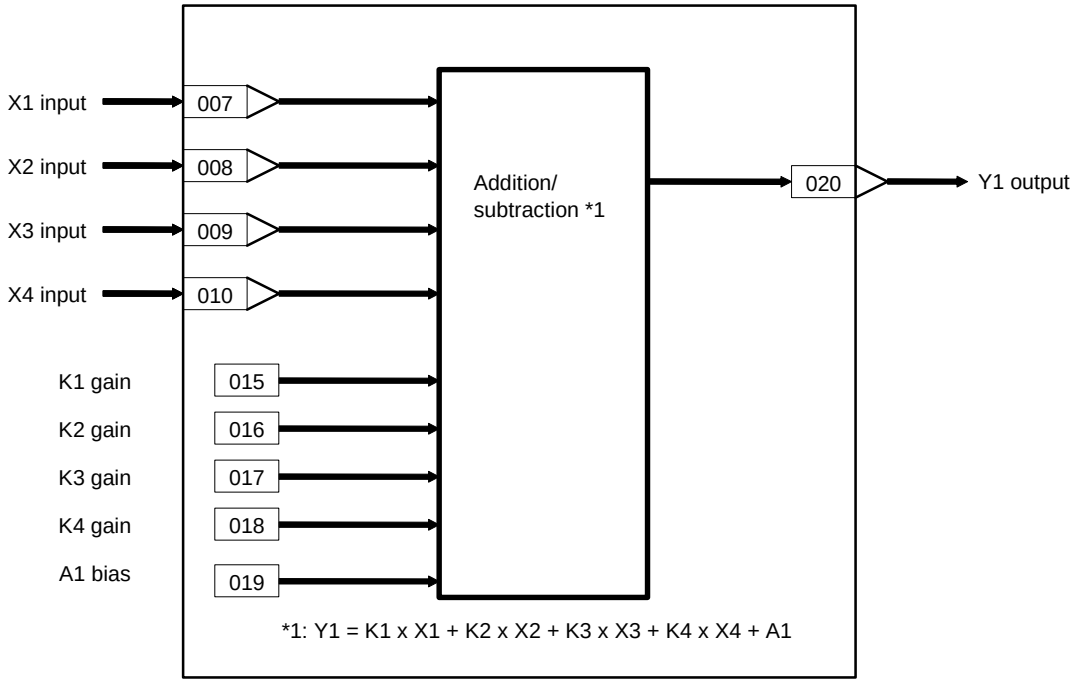

ITEM list

*1:On the CX-Process Monitor, the R/W mode is indicated in the Tuning screen or in the Control screen.

ITEM TYPE	ITEM	Symbol	Data Description	Data Range	Default	COLD start initialization	R/W Mode R: Read, W: Write, R/W: R/W-enabled, -: R/W-disabled Note: r and r/w: Read and read/write for validate action or monitor run status by CX-Process Tool or Monitor, (S): Initial setting data, (O): Operation data					Data Length (bytes)
							According to CX-Process Tool	According to CX-Process Monitor *1	According to ITEM Setting block	According to Step Ladder Program	Send/ Receive All Blocks	
Contact input	000		Stop block operation command (0: Cancel stop, 1: Stop)	0, 1	0	–	–	–	–	–	S/R	1
Parameter	001		Comment	23 characters	Block name	–	R/W(S)	–	–	–	–	24
	002		Block Model: Addition or Subtraction	121	121	–	R/W(S)	–	–	–	–	2
Special	003		Execution error display 0: Normal, Other: Error (See Appendix "Execution Error Code List.")		0000	–	r	–	–	–	S	2
Parameter	004		Operation cycle (sec) 0: Common, 1: 0.1, 2: 0.2, 3: 0.5, 4: 1, 5: 2	0 to 5	0	–	R/W(S)	–	–	–	–	2
Analog input connection information	007		X1 source designation BBB: Block address, III: ITEM No.	BBBIII	000000	–	R/W(S)	–	–	–	–	4
	008		X2 source designation BBB: Block address, III: ITEM No.	BBBIII	000000	–	R/W(S)	–	–	–	–	4
	009		X3 source designation BBB: Block address, III: ITEM No.	BBBIII	000000	–	R/W(S)	–	–	–	–	4
	010		X4 source designation BBB: Block address, III: ITEM No.	BBBIII	000000	–	R/W(S)	–	–	–	–	4
Analog input	011	X1	Input	±320.00%	0.00	Yes	r	–	–	–	S	2
	012	X2	Input	±320.00%	0.00	Yes	r	–	–	–	S	2
	013	X3	Input	±320.00%	0.00	Yes	r	–	–	–	S	2
	014	X4	Input	±320.00%	0.00	Yes	r	–	–	–	S	2
Parameter	015	K1	K1 gain	±10.000	1.000	–	R/W(O)	–	W	–	S/R	2
	016	K2	K2 gain	±10.000	1.000	–	R/W(O)	–	W	–	S/R	2
	017	K3	K3 gain	±10.000	1.000	–	R/W(O)	–	W	–	S/R	2
	018	K4	K4 gain	±10.000	1.000	–	R/W(O)	–	W	–	S/R	2
	019	A1	A1 bias	±320.00%	0.00	–	R/W(O)	–	W	–	S/R	2
Analog output	020	Y1	Output	±320.00%	0.00	Yes	r/w	–	–	–	S	2

List of tag ITEMs on SCADA software

The following tag ITEMs are used to specify ITEMs with CSV tags from SCADA software when sending/receiving data to/from the CPU Unit using Receive All Blocks (model 461)/Send All Blocks (model 462). All tag ITEMs are fixed and cannot be changed.

ITEM	Data Name	CSV Tags in SCADA Software
		Tag ITEM (fixed)
000	Stop block operation command	MT_ST
003	Execution error display	ERR
011	X1 Input	X1
012	X2 Input	X2
013	X3 Input	X3
014	X4 Input	X4
015	K1 gain	K1
016	K2 gain	K2
017	K3 gain	K3
018	K4 gain	K4
019	A1 bias	A1
020	Output	Y1

Block Model	Block Name	Block Address
<122>	Multiplication	100 to 349

Outline

This function block performs multiplication with gain and bias on up to two analog signals.

Y1 = (K1 x X1 + A1) (K2 x X2 + A2) + A3

•Internal operation is executed at double precision (32 bits).

Note: Calculate 100% in the calculation formula as 1.0. When there is no X2 input, take A2 to be 100.00%.

Block diagram

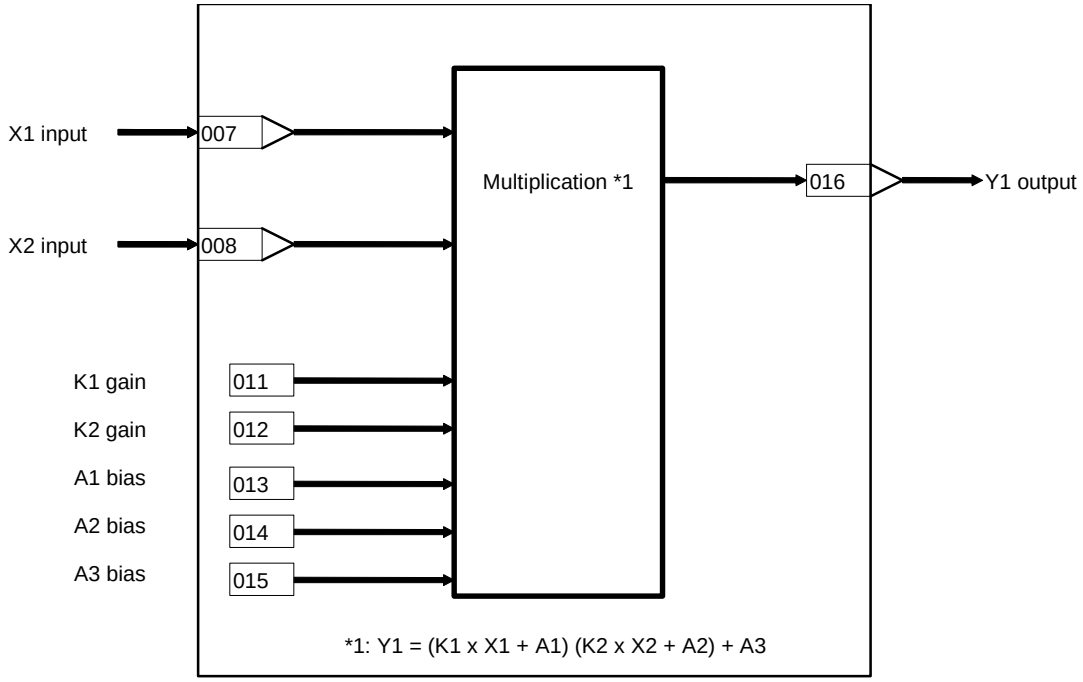

ITEM list

*1:On the CX-Process Monitor, the R/W mode is indicated in the Tuning screen or in the Control screen.

ITEM TYPE	ITEM	Symbol	Data Description	Data Range	Default	COLD start initialization	R/W Mode R: Read, W: Write, R/W: R/W-enabled, -: R/W-disabled Note: r and r/w: Read and read/write for validate action or monitor run status by CX-Process Tool or Monitor, (S): Initial setting data, (O): Operation data					Data Length (bytes)
							According to CX-Process Tool	According to CX-Process Monitor *1	According to ITEM Setting block	According to Step Ladder Program	Send/ Receive All Blocks	
Contact input	000		Stop block operation command (0: Cancel stop, 1: Stop)	0, 1	0	–	–	–	–	–	S/R	1
Parameter	001		Comment	23 characters	Block name	–	R/W(S)	–	–	–	–	24
	002		Block Model: Multiplication	122	122	–	R/W(S)	–	–	–	–	2
Special	003		Execution error display 0: Normal, Other: Error (See Appendix "Execution Error Code List.")		0000	–	r	–	–	–	S	2
Parameter	004		Operation cycle (sec) 0: Common, 1: 0.1, 2: 0.2, 3: 0.5, 4: 1, 5: 2	0 to 5	0	–	R/W(S)	–	–	–	–	2
Analog input connection information	007		X1 source designation BBB: Block address, III: ITEM No.	BBBIII	000000	–	R/W(S)	–	–	–	–	4
	008		X2 source designation BBB: Block address, III: ITEM No.	BBBIII	000000	–	R/W(S)	–	–	–	–	4
Analog input	009	X1	Input	±320.00%	0.00	Yes	r	–	–	–	S	2
	010	X2	Input	±320.00%	0.00	Yes	r	–	–		S	2
Parameter	011	K1	K1 gain	±10.000	1.000	–	R/W(O)	–	W	–	S/R	2
	012	K2	K2 gain	±10.000	1.000	–	R/W(O)	–	W	–	S/R	2
	013	A1	A1 bias	±320.00%	0.00	–	R/W(O)	–	W	–	S/R	2
	014	A2	A2 bias	±320.00%	0.00	–	R/W(O)	–	W	–	S/R	2
	015	A3	A3 bias	±320.00%	0.00	–	R/W(O)	–	W	–	S/R	2
Analog output	016	Y1	Output	±320.00%	0.00	Yes	r/w	–	–	–	S	2

List of tag ITEMs on SCADA software

The following tag ITEMs are used to specify ITEMs with CSV tags from SCADA software when sending/receiving data to/from the CPU Unit using Receive All Blocks (model 461)/Send All Blocks (model 462). All tag ITEMs are fixed and cannot be changed.

ITEM	Data Name	CSV Tags in SCADA Software
		Tag ITEM (fixed)
000	Stop block operation command	MT_ST
003	Execution error display	ERR
009	X1 Input	X1
010	X2 Input	X2
011	K1 gain	K1
012	K2 gain	K2
013	A1 bias	A1
014	A2 bias	A2
015	A3 bias	A3
016	Output	Y1

Block Model	Block Name	Block Address
<123>	Division	100 to 349

Outline

This function block performs division with gain and bias on up to two analog signals

$$Y1 = \frac{K1 \times X1 + A1}{K2 \times X2 + A2}$$

•Internal operation is executed at double precision (32 bits).

Note: Calculate 100% in the calculation formula as 1.0. When there is no X2 input, take A2 to be 100.00%.

Block diagram

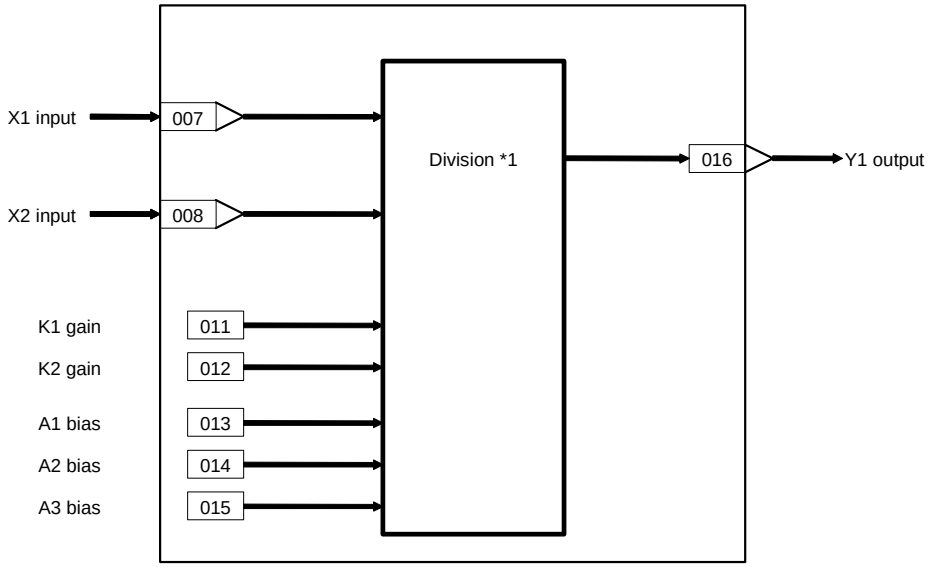

ITEM list

*1:On the CX-Process Monitor, the R/W mode is indicated in the Tuning screen or in the Control screen.

ITEM TYPE	ITEM	Symbol	Data Description	Data Range	Default	COLD start initialization	R/W Mode R: Read, W: Write, R/W: R/W-enabled, -: R/W-disabled Note: r and r/w: Read and read/write for validate action or monitor run status by CX-Process Tool or Monitor, (S): Initial setting data, (O): Operation data					Data Length (bytes)
							According to CX-Process Tool	According to CX-Process Monitor *1	According to ITEM Setting block	According to Step Ladder Program	Send/ Receive All Blocks	
Contact input	000		Stop block operation command (0: Cancel stop, 1: Stop)	0, 1	0	–	–	–	–	–	S/R	1
Parameter	001		Comment	23 characters	Block name	–	R/W(S)	–	–	–	–	24
	002		Block Model: Division	123	123	–	R/W(S)	–	–	–	–	2
Special	003		Execution error display 0: Normal, Other: Error (See Appendix "Execution Error Code List.")		0000	–	r	–	–	–	S	2
Parameter	004		Operation cycle (sec) 0: Common, 1: 0.1, 2: 0.2, 3: 0.5, 4: 1, 5: 2	0 to 5	0	–	R/W(S)	–	–	–	–	2
Analog input connection information	007		X1 source designation BBB: Block address, III: ITEM No.	BBBIII	000000	–	R/W(S)	–	–	–	–	4
	008		X2 source designation BBB: Block address, III: ITEM No.	BBBIII	000000	–	R/W(S)	–	–	–	–	4
Analog input	009	X1	Input	±320.00%	0.00	Yes	r	–	–	–	S	2
	010	X2	Input	±320.00%	0.00	Yes	r	–	–	–	S	2
Parameter	011	K1	K1 gain	±10.000	1.000	–	R/W(O)	–	W	–	S/R	2
	012	K2	K2 gain	±10.000	1.000	–	R/W(O)	–	W	–	S/R	2
	013	A1	A1 bias	±320.00%	0.00	–	R/W(O)	–	W	–	S/R	2
	014	A2	A2 bias	±320.00%	0.00	–	R/W(O)	–	W	–	S/R	2
	015	A3	A3 bias	±320.00%	0.00	–	R/W(O)	–	W	–	S/R	2
Analog output	016	Y1	Output	±320.00%	0.00	Yes	r/w	–	–	–	S	2

List of tag ITEMs on SCADA software

The following tag ITEMs are used to specify ITEMs with CSV tags from SCADA software when sending/receiving data to/from the CPU Unit using Receive All Blocks (model 461)/Send All Blocks (model 462). All tag ITEMs are fixed and cannot be changed.

ITEM	Data Name	CSV Tags in SCADA Software
		Tag ITEM (fixed)
000	Stop block operation command	MT_ST
003	Execution error display	ERR
009	X1 Input	X1
010	X2 Input	X2
011	K1 gain	K1
012	K2 gain	K2
013	A1 bias	A1
014	A2 bias	A2
015	A3 bias	A3
016	Output	Y1

Block Model	Block Name	Block Address
<126>	Arithmetic Operation	100 to 349

Outline

This function performs various math operations using industrial units. Not only basic arithmetic, but also special math, such as trigonometric functions, exponent functions, and logarithmic operations, is possible.

Note: The arithmetic functions blocks (Addition or Subtraction, Multiplication, and Division) operated on percentage units from 0% to 100%. The Arithmetic Operation block first scales input values X1 to X8 to real numbers and operates on industrial units.

The result of a conditional statement or the status of a contact input (S1) can be used to switch between two expressions (THEN/ELSE expressions) to calculate and output the operation results Y0.
It is also possible to set just one expression (the THEN expression) and use it unconditionally.

- Up to eight analog input values, X1 to X8, can be scaled to floating-point numbers and then used in the conditional statement or calculation expressions.
- The operators (arithmetic, trigonometric, etc), floating-point values A1 to A8, and the B1 to B4 intermediate buffers can be used in the conditional statement or calculation expressions. The conditional statement and calculation expressions must each be 32 characters or less.
- A comparison operator (<, >, etc.) must be used in the conditional statement.
- The specified calculation results can also be stored in the B1 to B4 intermediate buffers.
- The source data for inputs X1 to X8 is automatically detected inside the Loop Control Unit as normalized data or floating point data. (If floating point data is detected, scaling is disabled.) This enables specification of floating point data as the source data. (Supported from version 2.50 of the Loop Control Unit.)
  If floating point data is detected for inputs X1 to X8, X1 to X8 input values (ITEM 021 to ITEM 028) will always be 0.

Note: The operation result Y0 is output in both normalized form as Y1 for use in the Loop Control Unit (0.00% to 100.00% fixed decimal point data) and as floating-point data (Y2 and Y3).

Block diagram

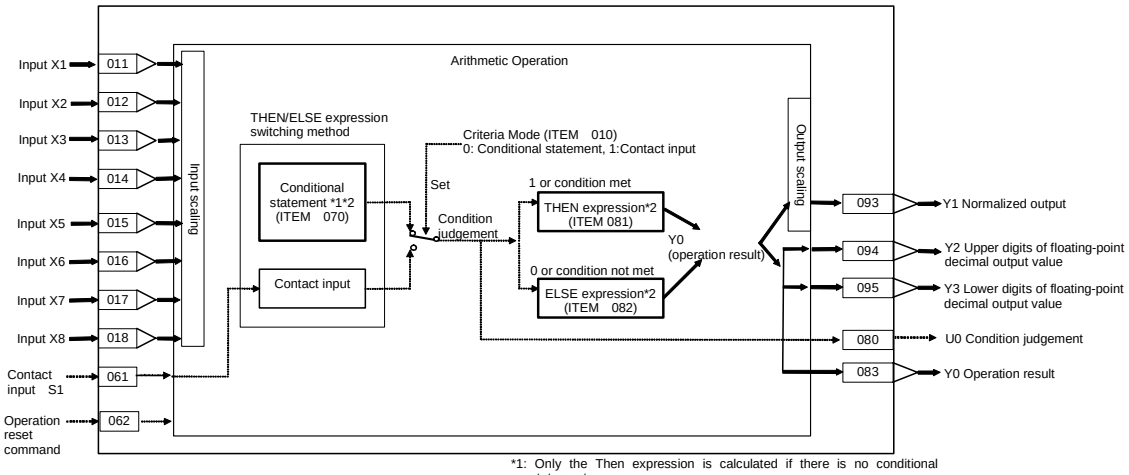

*1: Only the Then expression is calculated if there is no conditional statement.
*2: Inputs X1 to X8, constants A1 to A8, intermediate buffers B1 to B4, and operators can be used. A comparison operator is required in the conditional statement.

Description

The criteria mode set in ITEM 010 is used to designate the method for switching between the THEN and ELSE expressions.

1) Criteria Mode Set to Conditional Statement

The THEN expression is used when the conditional statement is satisfied (i.e., the judgement is 1).
The ELSE expression is used when the conditional statement is not satisfied (i.e., the judgement is 0).
The conditional statement is an expression using a comparison operator. It must consist of 32 characters max.
The left side of the THEN expression must consist of 32 characters max. (i.e., not including the operation results Y0=).
The left side of the ELSE expression must consist of 32 characters max. (i.e., not including the operation results Y0=).

Note: The THEN expression will be used if there is no conditional statement or there is no comparison operator in the conditional expression.

2) Criteria Mode set to Contact Input S1

The THEN expression is used when contact input S1 is 1 (i.e., the judgement is 1).
The ELSE expression is used when contact input S1 is 0 (i.e., the judgement is 0).
The left side of the THEN expression must consist of 32 characters max. (i.e., not including the operation results Y0=).
The left side of the ELSE expression must consist of 32 characters max. (i.e., not including the operation results Y0=).

The comparison operators that can be used in the conditional statement are as follows:
=, >, <, <>, >=, <=

Note: Using Equals (=) in the Conditional Statement
Internal calculations are performed using signal precision floating-point decimal. Floating-point error will result from division for scaling, division, numeric functions, etc. The possibility of error must be considered when using the equals operator (=). A <= or >= operator should be used whenever the size relationship can be expressed in the conditional statement.

The operators that can be used in the conditional statement and calculation expressions are as follows:

Symbol	Operator
+	Addition
-	Subtration
*	Multiplication
/	Division
ABS(x)	Absolute value
ACOS(x)	Arccosine
ASIN(x)	Arcsine
ATAN(x)	Arctangent
COS(x)	Cosine
SIN(x)	Sine
TAN(x)	Tangent

Symbol	Operator
EXP(x)	Exponent
LN(x)	Natural log
LOG(x)	Common log (log10)
P10(x)	Exponent of 10
SQRT(x)	Square root

Note: The analog input signals (X1 to X8), constants (A1 to A8), intermediate buffers (B1 to B4), and operation results (Y0) can be used for the argument (x).

Setting Examples

ITEM	Name	Data
010	Criteria mode	0 (conditional expression)
070	Conditional statement	(X1+X2+X3+X4+A5+A6+A7+A8)/A1>=A2
071	Intermediate buffer B1=	LN(X1)+EXP(X2)
072	Intermediate buffer B2=	B2+SQRT(Y0)
073	Intermediate buffer B3=	B2+X1*(-1.2345E-9)
074	Intermediate buffer B4=	SQRT(A8*(X1+X2)+A7)
081	THEN expression Y0=	X1+B3+B4
082	ELSE expression Y0=	X2+B3-B4

ITEM list

*1:On the CX-Process Monitor, the R/W mode is indicated in the Tuning screen or in the Control screen.

ITEM TYPE	ITEM	Symbol	Data Description	Data Range	Default	COLD start initialization	R/W Mode R: Read, W: Write, R/W: R/W-enabled, -: R/W-disabled Note: r and r/w: Read and read/write for validate action or monitor run status by CX-Process Tool or Monitor, (S): Initial setting data, (O): Operation data					Data Length (bytes)
							According to CX-Process Tool	According to CX-Process Monitor *1	According to ITEM Setting block	According to Step Ladder Program	Send/ Receive All Blocks	
Contact input	000		Stop block operation command 0: Cancel stop, 1: Stop	0, 1	0		–	–	–	–	S/R	1
Parameter	001		Comment	23 characters	Block name		R/W(S)	–	–	–	–	24
	002		Block Model: Arithmetic Operation	126	126		R/W(S)	–	–	–	–	2
Special	003		Execution error display 0: Normal, Other: error (See Appendix “Execution Error Code List.”)		0000		r	–	–	–	S	2
Parameter	004		Operation cycle (seconds) 0: Common, 1: 01, 2: 0.2, 3: 0.5, 4: 1, 5: 2	0 to 5	4		R/W(S)	–	–	–	–	2
Contact input	010		Criteria mode 0: Conditional statement (If ITEM 070 is blank, a THEN statement will be executed.) 1: Contact input (ITEM 061)	0, 1	0		R/W(S)	–	–	–	S/R	1
Analog input connection information	011		X1 source designation (BBB: Block address, III: ITEM number)	BBB or III	000000		R/W(S)	–	–	–	–	4
	012		X2 source designation (BBB: Block address, III: ITEM number)	BBB or III	000000		R/W(S)	–	–	–	–	4
	013		X3 source designation (BBB: Block address, III: ITEM number)	BBB or III	000000		R/W(S)	–	–	–	–	4
	014		X4 source designation (BBB: Block address, III: ITEM number)	BBB or III	000000		R/W(S)	–	–	–	–	4
	015		X5 source designation (BBB: Block address, III: ITEM number)	BBB or III	000000		R/W(S)	–	–	–	–	4
	016		X6 source designation (BBB: Block address, III: ITEM number)	BBB or III	000000		R/W(S)	–	–	–	–	4
	017		X7 source designation (BBB: Block address, III: ITEM number)	BBB or III	000000		R/W(S)	–	–	–	–	4
	018		X8 source designation (BBB: Block address, III: ITEM number)	BBB or III	000000		R/W(S)	–	–	–	–	4
Analog input	021	X1	X1 input value	±320.00%	0.00		r	–	–	–	S	2
	022	X2	X2 input value	±320.00%	0.00		r	–	–	–	S	2
	023	X3	X3 input value	±320.00%	0.00		r	–	–	–	S	2
	024	X4	X4 input value	±320.00%	0.00		r	–	–	–	S	2
Analog input	025	X5	X5 input value	±320.00%	0.00		r	–	–	–	S	2
	026	X6	X6 input value	±320.00%	0.00		r	–	–	–	S	2
	027	X7	X7 input value	±320.00%	0.00		r	–	–	–	S	2
	028	X8	X8 input value	±320.00%	0.00		r	–	–	–	S	2
Parameter	031		X1 scaling upper limit Floating point decimal: Sign + 5 numeric digits + Decimal point, + E + Sign + 1 numeric digit	10 characters max.			R/W(S)	–	–	–	–	12
	032		X1 scaling lower limit Floating point decimal: Sign + 5 numeric digits + Decimal point, + E + Sign + 1 numeric digit	10 characters max.			R/W(S)	–	–	–	–	12
	033		X2 scaling upper limit Floating point decimal: Sign + 5 numeric digits + Decimal point, + E + Sign + 1 numeric digit	10 characters max.			R/W(S)	–	–	–	–	12
	034		X2 scaling lower limit Floating point decimal: Sign + 5 numeric digits + Decimal point, + E + Sign + 1 numeric digit	10 characters max.			R/W(S)	–	–	–	–	12

*1:On the CX-Process Monitor, the R/W mode is indicated in the Tuning screen or in the Control screen.

ITEM TYPE	ITEM	Symbol	Data Description	Data Range	Default	COLD start initialization	R/W Mode R: Read, W: Write, R/W: R/W-enabled, -: R/W-disabled Note: r and r/w: Read and read/write for validate action or monitor run status by CX-Process Tool or Monitor, (S): Initial setting data, (O): Operation data					Data Length (bytes)
							According to CX-Process Tool	According to CX-Process Monitor *1	According to ITEM Setting block	According to Step Ladder Program	Send/ Receive All Blocks	
	035		X3 scaling upper limit Floating point decimal: Sign + 5 numeric digits + Decimal point, + E + Sign + 1 numeric digit	10 characters max.			R/W(S)	–	–	–	–	12
	036		X3 scaling lower limit Floating point decimal: Sign + 5 numeric digits + Decimal point, + E + Sign + 1 numeric digit	10 characters max.			R/W(S)	–	–	–	–	12
	037		X4 scaling upper limit Floating point decimal: Sign + 5 numeric digits + Decimal point, + E + Sign + 1 numeric digit	10 characters max.			R/W(S)	–	–	–	–	12
	038		X4 scaling lower limit Floating point decimal: Sign + 5 numeric digits + Decimal point, + E + Sign + 1 numeric digit	10 characters max.			R/W(S)	–	–	–	–	12
	039		X5 scaling upper limit Floating point decimal: Sign + 5 numeric digits + Decimal point, + E + Sign + 1 numeric digit	10 characters max.			R/W(S)	–	–	–	–	12
	040		X5 scaling lower limit Floating point decimal: Sign + 5 numeric digits + Decimal point, + E + Sign + 1 numeric digit	10 characters max.			R/W(S)	–	–	–	–	12
	041		X6 scaling upper limit Floating point decimal: Sign + 5 numeric digits + Decimal point, + E + Sign + 1 numeric digit	10 characters max.			R/W(S)	–	–	–	–	12
	042		X6 scaling lower limit Floating point decimal: Sign + 5 numeric digits + Decimal point, + E + Sign + 1 numeric digit	10 characters max.			R/W(S)	–	–	–	–	12
	043		X7 scaling upper limit Floating point decimal: Sign + 5 numeric digits + Decimal point, + E + Sign + 1 numeric digit	10 characters max.			R/W(S)	–	–	–	–	12
	044		X7 scaling lower limit Floating point decimal: Sign + 5 numeric digits + Decimal point, + E + Sign + 1 numeric digit	10 characters max.			R/W(S)	–	–	–	–	12
	045		X8 scaling upper limit Floating point decimal: Sign + 5 numeric digits + Decimal point, + E + Sign + 1 numeric digit	10 characters max.			R/W(S)	–	–	–	–	12
	046		X8 scaling lower limit Floating point decimal: Sign + 5 numeric digits + Decimal point, + E + Sign + 1 numeric digit	10 characters max.			R/W(S)	–	–	–	–	12
	051		A1 Floating point decimal: Sign + 5 numeric digits + Decimal point, + E + Sign + 1 numeric digit	10 characters max.			R/W(O)	–	–	–	–	12
	052		A2 Floating point decimal: Sign + 5 numeric digits + Decimal point, + E + Sign + 1 numeric digit	10 characters max.			R/W(O)	–	–	–	–	12
	053		A3 Floating point decimal: Sign + 5 numeric digits + Decimal point, + E + Sign + 1 numeric digit	10 characters max.			R/W(O)	–	–	–	–	12
	054		A4 Floating point decimal: Sign + 5 numeric digits + Decimal point, + E + Sign + 1 numeric digit	10 characters max.			R/W(O)	–	–	–	–	12
	055		A5 Floating point decimal: Sign + 5 numeric digits + Decimal point, + E + Sign + 1 numeric digit	10 characters max.			R/W(O)	–	–	–	–	12
	056		A6 Floating point decimal: Sign + 5 numeric digits + Decimal point, + E + Sign + 1 numeric digit	10 characters max.			R/W(O)	–	–	–	–	12

*1:On the CX-Process Monitor, the R/W mode is indicated in the Tuning screen or in the Control screen.

ITEM TYPE	ITEM	Symbol	Data Description	Data Range	Default	COLD start initialization	R/W Mode R: Read, W: Write, R/W: R/W-enabled, -: R/W-disabled Note: r and r/w: Read and read/write for validate action or monitor run status by CX-Process Tool or Monitor, (S): Initial setting data, (O): Operation data					Data Length (bytes)
							According to CX-Process Tool	According to CX-Process Monitor *1	According to ITEM Setting block	According to Step Ladder Program	Send/ Receive All Blocks	
	057		A7 Floating point decimal: Sign + 5 numeric digits + Decimal point, + E + Sign + 1 numeric digit	10 characters max.			R/W(O)	–	–	–	–	12
	058		A8 Floating point decimal: Sign + 5 numeric digits + Decimal point, + E + Sign + 1 numeric digit	10 characters max.			R/W(O)	–	–	–	–	12
Contact input	061	S1	Contact input	0, 1			–	–	–	R/W	S/R	1
	062	S2	Operation reset command	0, 1	0		R/W(O)	–	–	R/W	S/R	1
Parameter	070		Conditional statement	32 characters max.			R/W(S)	–	–	–	–	34
	071		B1 intermediate buffer	32 characters max.			R/W(S)	–	–	–	–	34
	072		B2 intermediate buffer	32 characters max.			R/W(S)	–	–	–	–	34
	073		B3 intermediate buffer	32 characters max.			R/W(S)	–	–	–	–	34
	074		B4 intermediate buffer	32 characters max.			R/W(S)	–	–	–	–	34
Contact output	080	U0	Condition judgement 0: Criteria not met or contact input OFF, 1: Criteria met or contact input ON	0, 1			–	–	–	R	S	1
Parameter	081		THEN expression	32 characters max.			R/W(S)	–	–	–	–	34
	082		ELSE expression	32 characters max.			R/W(S)	–	–	–	–	34
Analog output	083	Y0	Operation result (result of THEN expression or result of ELSE expression)	Floating-point value			r	–	–	–	–	4
Parameter	091		Output reverse scaling upper limit Floating point decimal: Sign + 5 numeric digits + Decimal point, + E + Sign + 1 numeric digit	10 characters max.			R/W(S)	–	–	–	–	12
	092		Output reverse scaling lower limit Floating point decimal: Sign + 5 numeric digits + Decimal point, + E + Sign + 1 numeric digit	10 characters max.			R/W(S)	–	–	–	–	12
Analog output	093	Y1	Normalized output value (value after reverse scaling for Y0)	±320.00%	0.00		r	–	–	–	S	2
	094	Y2	Floating-point decimal output value (upper digits of Y0)	0 to 65535	0		r	–	–	–	S	2
	095	Y3	Floating-point decimal output value (lower digits of Y0)	0 to 65535	0		r	–	–	–	S	2

Note:

- The normalized output (Y1, ITEM 093) is the operation result (Y0, ITEM 083) scaled back to between 0% and 100% (fixed floating-point value) using the output reverse scaling upper and lower limits (ITEM 091 and ITEM 092). Y1 is rounded to two decimal places.
- The upper and lower digits of the floating-point decimal output value (Y2 and Y3, ITEM 094 and ITEM 095) use the IEEE754 format (bits 00 to 22: mantissa, bits 23 to 30: exponent, bit 31: sign). This enables outputting the results to I/O memory in the CPU Unit using an AO Terminal to CPU Unit Block for application in floating-point data conversion and math instructions in the CPU Unit ladder program. It also enables monitoring the data as floating-point decimal data on the CX-Programmer's I/O memory editing window.
- Turning ON the operation reset command (S2, ITEM 062) will clear the operation result (Y0), normalized output value (Y1), and the floating-point output value (Y2 and Y3) to zero before processing calculations. (From version 2.50 of the Loop Control Unit, the operation result Y0 will be 0 as long as the operation reset command S2 is 1 (ON).)
  For example, this can be used to reset a total when inputting Y0 in accumulative calculations for the THEN or ELSE expression.
- Floating-point decimal data must be within the following ranges as well as within the range specified for each ITEM.
  This applies to the scaling upper and lower limits for X1 to X8, constants A1 to A8, the conditional statement, intermediate buffers B1 to B4, the THEN expression, the ELSE expression, and the output reverse scaling upper and lower limits.
  Range: -3.402823×10^{38} to $-1.401298 \times 10^{-45}$, $+1.401298 \times 10^{-45}$ to $+3.402823 \times 10^{38}$

•Floating-point decimal data can be given in any of the following formats (x = 0 to 9):
xxx, x.x, xxxxx.xxxxx, +x.xxxxEx, x.xxxx+Ex. +x.xxxxExx, x.xxxx+Exx, x.xxxxE-x, x.xxxxE-xx, -x.xxxxE-x, -x.xxxxE-xx
In all of these formats, the mantissa is to the left of E and the exponent is to the right of E.
Example: +1.2345E7 would be 1.2345 x 10^7
•The order of calculations of the ITEMs is as follows:
B1, B2, B3, B4, conditional statement, THEN expression, ELSE expression.
•When the Loop Control Unit is cold-started, B1 to B4, the condition judgement (U0), and the operation result (Y0) are cleared to 0. If an intermediate buffer is used as the denominator in a division operation without placing a suitable value in the buffer, a division by 0 error (execution error 10) will occur.
• When the source data for input Xn is the Loop Control Unit's internal data (0.00% to 100.00%: fixed decimal point), always set the Xn scaling value (ITEM 031 to 046) to lower limit 0.00 and upper limit 100.00.
If the Xn scaling value is blank, operations will be performed using the lower limit 0 and upper limit 10,000. Therefore, if the Xn scaling value is left blank, Xn = 30.00% will be arithmetically converted to 3,000.0.
If the source data for input Xn is a cumulative value or other integer, however, and using the lower limit 0 and upper limit 10,000 are not a problem, the Xn scaling value can be left blank. For example, Xn = 3,000 will be treated arithmetically as 3,000.
•Execution Errors
If an execution error occurs, execution of the Arithmetic Operation block will be stopped. If this occurs, check all operators, arguments, and the operation result and correct the conditional statement or calculation expressions as necessary. The execution errors that can occur for this block are described below.
Execution error 3 will occur if constants A1 to A8 or the intermediate buffers (B1 to B4) are used in the conditional statement or calculation expressions but not defined. (Definition is not required for ITEMs that are not used.)
•Execution error 19 (unsuitable operation) will occur if there is a syntax error in the conditional statement or a calculation expression or if the THEN expression, ELSE expression, or output reverse scaling upper/lower limits are not defined.
The execution errors that can occur for this operators are listed in the following table.

Symbol	Operator	Execution error
+	Addition	None
-	Subtration	None
*	Multiplication	None
/	Division	Execution error 10 (division by 0) will occur if an attempt is made to divide by 0.
ABS(x)	Absolute value	Execution error 11 (operation exceeded) will occur if x is negative and the result exeeded the range of numbers for single-percision floating-point.
ACOS(x)	Arccosine	Execution error 12 (augment beyond definition) will occur if the arugment is not between -1.0 and 1.0.
ASIN(x)	Arcsine	Execution error 12 (augment beyond definition) will occur if the arugment is not between -1.0 and 1.0.
ATAN(x)	Arctangent	None
COS(x)	Cosine	None
SIN(x)	Sine	None
TAN(x)	Tangent	None
EXP(x)	Exponent	Execution error 11 (operation exceeded) will occur the result exeeded the range of numbers for single-percision floating-point.
LN(x)	Natural log	Execution error 11 (operation exceeded) will occur if x is 0.0. Execution error 12 (augment beyond definition) will occur if x is negative.
LOG(x)	Common log (log10)	Execution error 11 (operation exceeded) will occur if x is 0.0. Execution error 12 (augment beyond definition) will occur if x is negative.
P10(x)	Exponent of 10	None
SQRT(x)	Square root	Execution error 12 (augment beyond definition) will occur if x is negative.

List of tag ITEMs on SCADA software

The following tag ITEMs are used to specify ITEMs with CSV tags from SCADA software when sending/receiving data to/from the CPU Unit using Receive All Blocks (model 461)/Send All Blocks (model 462). All tag ITEMs are fixed and cannot be changed.

ITEM <0}	Data Name	CSV Tags in SCADA Software
		Tag ITEM (Fixed)
000	Stop block operation command	MT_ST
003	Execution error display	ERR
010	Criteria mode	S0
021	Input	X1
022	Input	X2
023	Input	X3
024	Input	X4
025	Input	X5
026	Input	X6
027	Input	X7
028	Input	X8
061	Contact input	S1
062	Operation reset command	S2
080	Judgement	U0
093	Normalized output value	Y1
094	Floating-point decimal output value (upper digits of Y0)	Y2
095	Floating-point decimal output value (lower digits of Y0)	Y3

Block Model	Block Name	Block Address
<127>	Range Conversion	100 to 349

Outline

This function block converts ranges for analog signals simply by setting the values for 0% and 100% inputs and 0% and 100% outputs. Range conversions are possible for up to eight analog inputs.

Applications

Used between function blocks. Using a range conversion eliminates the need to calculate coefficients and biases.

Block diagram

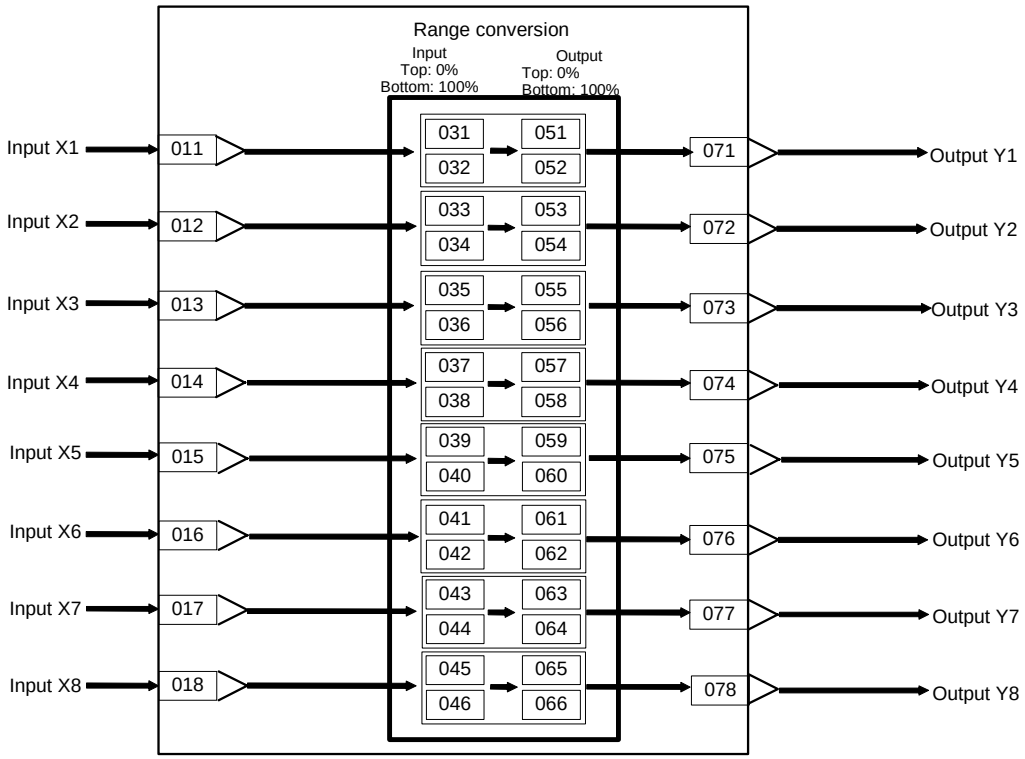

ITEM list

*1:On the CX-Process Monitor, the R/W mode is indicated in the Tuning screen or in the Control screen.

ITEM TYPE	ITEM	Symbol	Data Description	Data Range	Default	COLD start initialization	R/W Mode R: Read, W: Write, R/W: R/W-enabled, -: R/W-disabled Note: r and r/w: Read and read/write for validate action or monitor run status by CX-Process Tool or Monitor, (S): Initial setting data, (O): Operation data					Data Length (bytes)
							According to CX-Process Tool	According to CX-Process Monitor *1	According to ITEM Setting block	According to Step Ladder Program	Send/ Receive All Blocks	
Contact input	000		Stop block operation command (0: Cancel stop, 1: Stop)	0, 1	0		–	R/W	–	–	S/R	1
Parameter	001		Comment	23 characters	Block name		R/W(S)	–	–	–	–	24
	002		Block Model: Range Conversion	127	127		R/W(S)	–	–	–	–	2
Special	003		Execution error display 0: Normal, Other: Error (See Appendix “Execution Error Code List.”)		0000		r	–	–	–	S	2
Parameter	004		Operation cycle (sec) 0: Common, 1: 0.1, 2: 0.2, 3: 0.5, 4: 1, 5: 2	0 to 5	0		R/W(S)	–	–	–	–	2
Analog input connection information	011		X1 source designation BBB: Block address, III: ITEM No.	BBBIII	000000		R/W(S)	–	–	–	–	4
	012		X2 source designation BBB: Block address, III: ITEM No.	BBBIII	000000		R/W(S)	–	–	–	–	4
	013		X3 source designation BBB: Block address, III: ITEM No.	BBBIII	000000		R/W(S)	–	–	–	–	4
	014		X4 source designation BBB: Block address, III: ITEM No.	BBBIII	000000		R/W(S)	–	–	–	–	4
	015		X5 source designation BBB: Block address, III: ITEM No.	BBBIII	000000		R/W(S)	–	–	–	–	4
	016		X6 source designation BBB: Block address, III: ITEM No.	BBBIII	000000		R/W(S)	–	–	–	–	4
	017		X7 source designation BBB: Block address, III: ITEM No.	BBBIII	000000		R/W(S)	–	–	–	–	4
	018		X8 source designation BBB: Block address, III: ITEM No.	BBBIII	000000		R/W(S)	–	–	–	–	4
Analog inputs	021	X1	Input value	±320.00%	0.00		r	–	–	–	S	2
	022	X2	Input value	±320.00%	0.00		r	–	–	–	S	2
	023	X3	Input value	±320.00%	0.00		r	–	–	–	S	2
	024	X4	Input value	±320.00%	0.00		r	–	–	–	S	2
	025	X5	Input value	±320.00%	0.00		r	–	–	–	S	2
	026	X6	Input value	±320.00%	0.00		r	–	–	–	S	2
	027	X7	Input value	±320.00%	0.00		r	–	–	–	S	2
	028	X8	Input value	±320.00%	0.00		r	–	–	–	S	2
Parameters	031		Input range 0% (Input value X1)	±320.00%	0.00		R/W(S)	–	–	–	–	2
	032		Input range 100% (Input value X1)	±320.00%	100.00		R/W(S)	–	–	–	–	2
	033		Input range 0% (Input value X2)	±320.00%	0.00		R/W(S)	–	–	–	–	2
	034		Input range 100% (Input value X2)	±320.00%	100.00		R/W(S)	–	–	–	–	2
	035		Input range 0% (Input value X3)	±320.00%	0.00		R/W(S)	–	–	–	–	2
	036		Input range 100% (Input value X3)	±320.00%	100.00		R/W(S)	–	–	–	–	2
	037		Input range 0% (Input value X4)	±320.00%	0.00		R/W(S)	–	–	–	–	2
	038		Input range 100% (Input value X4)	±320.00%	100.00		R/W(S)	–	–	–	–	2
	039		Input range 0% (Input value X5)	±320.00%	0.00		R/W(S)	–	–	–	–	2
	040		Input range 100% (Input value X5)	±320.00%	100.00		R/W(S)	–	–	–	–	2
	041		Input range 0% (Input value X6)	±320.00%	0.00		R/W(S)	–	–	–	–	2
	042		Input range 100% (Input value X6)	±320.00%	100.00		R/W(S)	–	–	–	–	2
	043		Input range 0% (Input value X7)	±320.00%	0.00		R/W(S)	–	–	–	–	2
	044		Input range 100% (Input value X7)	±320.00%	100.00		R/W(S)	–	–	–	–	2
	045		Input range 0% (Input value X8)	±320.00%	0.00		R/W(S)	–	–	–	–	2
	046		Input range 100% (Input value X8)	±320.00%	100.00		R/W(S)	–	–	–	–	2
	051		Output range 0% (Output valueY1)	±320.00%	0.00		R/W(S)	–	–	–	–	2
	052		Output range 100% (Output value Y1)	±320.00%	100.00		R/W(S)	–	–	–	–	2
	053		Output range 0% (Output value Y2)	±320.00%	0.00		R/W(S)	–	–	–	–	2
	054		Output range 100% (Output value Y2)	±320.00%	100.00		R/W(S)	–	–	–	–	2
	055		Output range 0% (Output value Y3)	±320.00%	0.00		R/W(S)	–	–	–	–	2
	056		Output range 100% (Output value Y3)	±320.00%	100.00		R/W(S)	–	–	–	–	2
	057		Output range 0% (Output value Y4)	±320.00%	0.00		R/W(S)	–	–	–	–	2
	058		Output range 100% (Output value Y4)	±320.00%	100.00		R/W(S)	–	–	–	–	2
	059		Output range 0% (Output value Y5)	±320.00%	0.00		R/W(S)	–	–	–	–	2
	060		Output range 100% (Output value Y5)	±320.00%	100.00		R/W(S)	–	–	–	–	2
	061		Output range 0% (Output value Y6)	±320.00%	0.00		R/W(S)	–	–	–	–	2
	062		Output range 100% (Output value Y6)	±320.00%	100.00		R/W(S)	–	–	–	–	2
	063		Output range 0% (Output value Y7)	±320.00%	0.00		R/W(S)	–	–	–	–	2

*1:On the CX-Process Monitor, the R/W mode is indicated in the Tuning screen or in the Control screen.

ITEM TYPE	ITEM	Symbol	Data Description	Data Range	Default	COLD start initialization	R/W Mode R: Read, W: Write, R/W: R/W-enabled, -: R/W-disabled Note: r and r/w: Read and read/write for validate action or monitor run status by CX-Process Tool or Monitor, (S): Initial setting data, (O): Operation data					Data Length (bytes)
							According to CX-Process Tool	According to CX-Process Monitor *1	According to ITEM Setting block	According to Step Ladder Program	Send/ Receive All Blocks	
	064		Output range 100% (Output value Y7)	±320.00%	100.00		R/W(S)	–	–	–	–	2
	065		Output range 0% (Output value Y8)	±320.00%	0.00		R/W(S)	–	–	–	–	2
	066		Output range 100% (Output value Y8)	±320.00%	100.00		R/W(S)	–	–	–	–	2
Analog outputs	071	Y1	Output value	±320.00%	0.00		r/w	–	–	–	S	2
	072	Y2	Output value	±320.00%	0.00		r/w	–	–	–	S	2
	073	Y3	Output value	±320.00%	0.00		r/w	–	–	–	S	2
	074	Y4	Output value	±320.00%	0.00		r/w	–	–	–	S	2
	075	Y5	Output value	±320.00%	0.00		r/w	–	–	–	S	2
	076	Y6	Output value	±320.00%	0.00		r/w	–	–	–	S	2
	077	Y7	Output value	±320.00%	0.00		r/w	–	–	–	S	2
	078	Y8	Output value	±320.00%	0.00		r/w	–	–	–	S	2

List of tag ITEMs on CX-Process Monitor or SCADA software

The following tag ITEMs are used to specify ITEMs with CSV tags from SCADA software when sending/receiving data to/from the CPU Unit using Receive All Blocks (Block Model 461)/Send All Blocks (Block Model 462). All tag ITEMs are fixed and cannot be changed.

ITEM	Data Name	CSV Tags in SCADA Software
		Tag ITEM (fixed)
000	Stop block execution command	MT_ST
003	Execution error display	ERR
021	Input value	X1
022	Input value	X2
023	Input value	X3
024	Input value	X4
025	Input value	X5
026	Input value	X6
027	Input value	X7
028	Input value	X8
071	Output value	Y1
072	Output value	Y2
073	Output value	Y3
074	Output value	Y4
075	Output value	Y5
076	Output value	Y6
077	Output value	Y7
078	Output value	Y8

Block Model	Block Name	Block Address
<131>	Square Root	100 to 349

Outline

This function block performs square root extraction (with low-end cutout) on single analog signals.

$$Y1=K1\sqrt{X1}$$

Y1 = K1 x X1 when X1 is at the input low-end cutout setting or a minus value.
•Provided with input dropout function
•Method of use:To extract the square root signal from a differential pressure flowmeter, set K1 to equal 1. To change the span, change the value of K1.

Note: Calculate 100% in the calculation formula as 1.0.

Block diagram

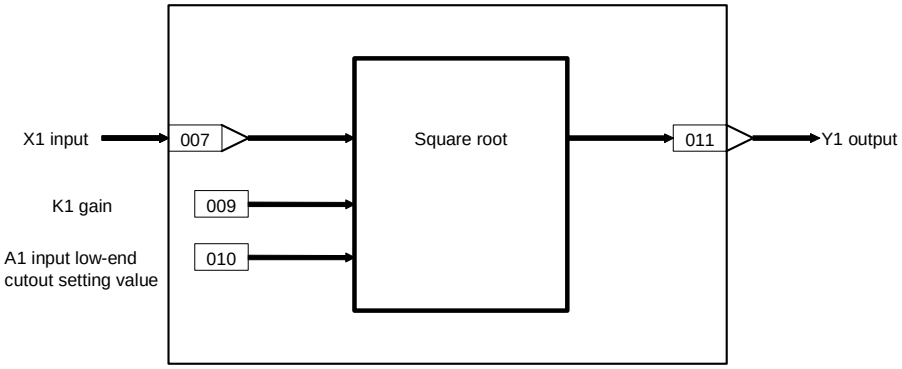

ITEM list

*1:On the CX-Process Monitor, the R/W mode is indicated in the Tuning screen or in the Control screen.

ITEM TYPE	ITEM	Symbol	Data Description	Data Range	Default	COLD start initialization	R/W Mode R: Read, W: Write, R/W: R/W-enabled, -: R/W-disabled Note: r and r/w: Read and read/write for validate action or monitor run status by CX-Process Tool or Monitor, (S): Initial setting data, (O): Operation data					Data Length (bytes)
							According to CX-Process Tool	According to CX-Process Monitor *1	According to ITEM Setting block	According to Step Ladder Program	Send/ Receive All Blocks	
Contact input	000		Stop block operation command (0: Cancel stop, 1: Stop)	0, 1	0		–	–	–	–	S/R	1
Parameter	001		Comment	23 characters	Block name		R/W(S)	–	–	–	–	24
	002		Block Model: Square Root	131	131		R/W(S)	–	–	–	–	2
Special	003		Execution error display 0: Normal, Other: Error (See Appendix "Execution Error Code List.")		0000		r	–	–	–	S	2
Parameter	004		Operation cycle (sec) 0: Common, 1: 0.1, 2: 0.2, 3: 0.5, 4: 1, 5: 2	0 to 5	0		R/W(S)	–	–	–	–	2
Analog input connection information	007		X1 source designation BBB: Block address, III: ITEM No.	BBBIII	000000		R/W(S)	–	–	–	–	4
Analog input	008	X1	Input	±320.00%	0.00		r	–	–	–	S	2
Parameter	009	K1	Gain	±10.000	1.000		R/W(O)	–	W	–	S/R	2
	010	A1	Input low-end cutout setting	0 to 320.00%	0.00		R/W(O)	–	W	–	S/R	2
Analog output	011	Y1	Output	±320.00%	0.00		r/w	–	–	–	S	2

List of tag ITEMs on SCADA software

The following tag ITEMs are used to specify ITEMs with CSV tags from SCADA software when sending/receiving data to/from the CPU Unit using Receive All Blocks (model 461)/Send All Blocks (model 462). All tag ITEMs are fixed and cannot be changed.

ITEM	Data Name	CSV Tags in SCADA Software
		Tag ITEM (fixed)
000	Stop block operation command	MT_ST
003	Execution error display	ERR
008	X1 Input	X1
009	Gain	K1
010	Input low-end cutout setting	A1
011	Output	Y1

Block Model	Block Name	Block Address
<132>	Absolute Value	100 to 349

Outline

This function block outputs the absolute value of single analog signals.

Y1 = |X1|

Block diagram

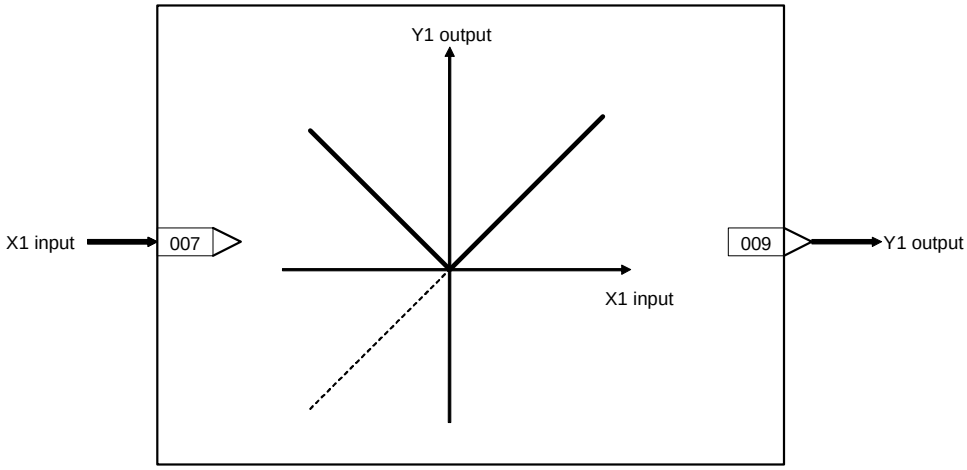

ITEM list

*1:On the CX-Process Monitor, the R/W mode is indicated in the Tuning screen or in the Control screen.

ITEM TYPE	ITEM	Symbol	Data Description	Data Range	Default	COLD start initialization	R/W Mode R: Read, W: Write, R/W: R/W-enabled, -: R/W-disabled Note: r and r/w: Read and read/write for validate action or monitor run status by CX-Process Tool or Monitor, (S): Initial setting data, (O): Operation data					Data Length (bytes)
							According to CX-Process Tool	According to CX-Process Monitor *1	According to ITEM Setting block	According to Step Ladder Program	Send/ Receive All Blocks	
Contact input	000		Stop block operation command (0: Cancel stop, 1: Stop)	0, 1	0		–	–	–	–	S/R	1
Parameter	001		Comment	23 characters	Block name		R/W(S)	–	–	–	–	24
	002		Block Model: Absolute Vlaue	132	132		R/W(S)	–	–	–	–	2
Special	003		Execution error display 0: Normal, Other: Error (See Appendix "Execution Error Code List.")		0000		r	–	–	–	S	2
Parameter	004		Operation cycle (sec) 0: Common, 1: 0.1, 2: 0.2, 3: 0.5, 4: 1, 5: 2	0 to 5	0		R/W(S)	–	–	–	–	2
Analog input connection information	007		X1 source designation BBB: Block address, III: ITEM No.	BBBIII	000000		R/W(S)	–	–	–	–	4
Analog input	008	X1	Input	±320.00%	0.00		r	–	–	–	S	2
Analog output	009	Y1	Output	±320.00%	0.00		r/w	–	–	–	S	2

List of tag ITEMs on SCADA software

The following tag ITEMs are used to specify ITEMs with CSV tags from SCADA software when sending/receiving data to/from the CPU Unit using Receive All Blocks (model 461)/Send All Blocks (model 462). All tag ITEMs are fixed and cannot be changed.

ITEM	Data Name	CSV Tags in SCADA Software
		Tag ITEM (fixed)
000	Stop block operation command	MT_ST
003	Execution error display	ERR
008	X1 input	X1
009	Output	Y1

Block Model	Block Name	Block Address
<133>	Non-linear Gain (Dead Band)	100 to 349

Outline

This function block performs non-linear (three gain values K1, K2, K3) operation on single analog signals. Analog signals can also be set as a dead band (with differential gap) by setting K2 to equal 0.

Function block applications

Non-linear control.

Block diagram

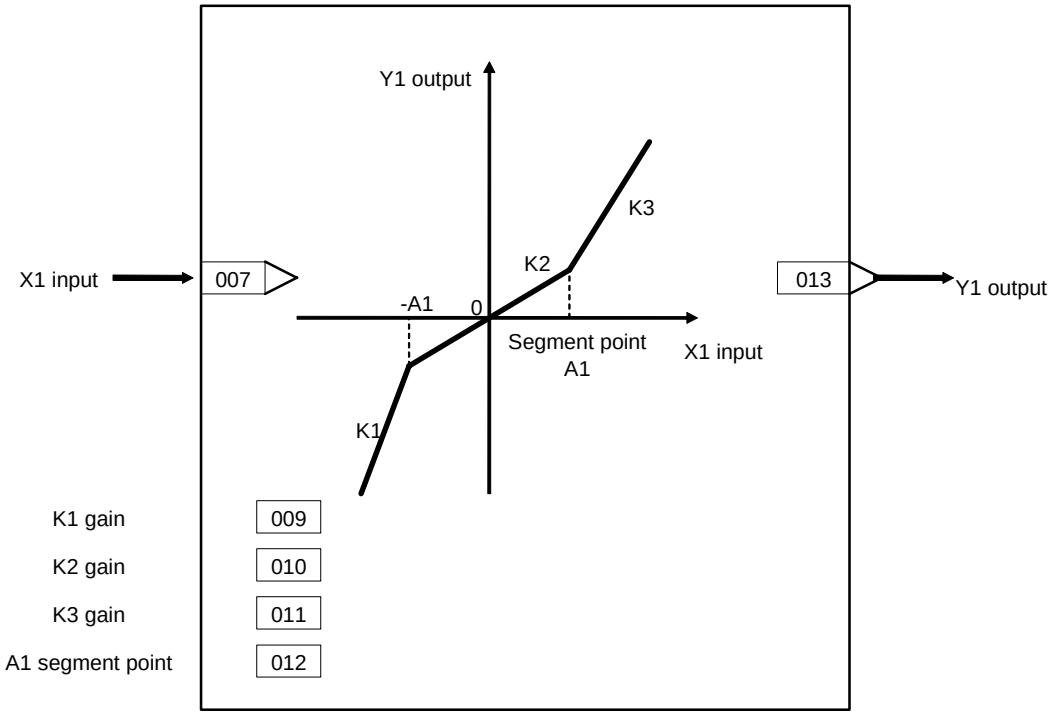

ITEM list

*1:On the CX-Process Monitor, the R/W mode is indicated in the Tuning screen or in the Control screen.

ITEM TYPE	ITEM	Symbol	Data Description	Data Range	Default	COLD start initialization	R/W Mode R: Read, W: Write, R/W: R/W-enabled, -: R/W-disabled Note: r and r/w: Read and read/write for validate action or monitor run status by CX-Process Tool or Monitor, (S): Initial setting data, (O): Operation data					Data Length (bytes)
							According to CX-Process Tool	According to CX-Process Monitor *1	According to ITEM Setting block	According to Step Ladder Program	Send/ Receive All Blocks	
Contact input	000		Stop block operation command (0: Cancel stop, 1: Stop)	0, 1	0		–	–	–	–	S/R	1
Parameter	001		Comment	23 characters	Block name		R/W(S)	–	–	–	–	24
	002		Model name: Non-linear Gain (Dead Band)	133	133		R/W(S)	–	–	–	–	2
Special	003		Execution error display 0: Normal, Other: Error (See Appendix "Execution Error Code List.")		0000		r	–	–	–	S	2
Parameter	004		Operation cycle (sec) 0: Common, 1: 0.1, 2: 0.2, 3: 0.5, 4: 1, 5: 2	0 to 5	0		R/W(S)	–	–	–	–	2
Analog input connection information	007		X1 source designation BBB: Block address, III: ITEM No.	BBBIII	000000		R/W(S)	–	–	–	–	4
Analog input	008	X1	Input	±320.00%	0.00		r	–	–	–	S	2
Parameter	009	K1	K1 gain	±10.000	1.000		R/W(O)	–	W	–	S/R	2
	010	K2	K2 gain	±10.000	1.000		R/W(O)	–	W	–	S/R	2
	011	K3	K3 gain	±10.000	1.000		R/W(O)	–	W	–	S/R	2
	012	A1	Segment point	0 to 320.00%	0.00		R/W(O)	–	W	–	S/R	2
Analog output	013	Y1	Output	±320.00%	0.00		r/w	–	–	–	S	2

List of tag ITEMs on SCADA software

The following tag ITEMs are used to specify ITEMs with CSV tags from SCADA software when sending/receiving data to/from the CPU Unit using Receive All Blocks (model 461)/Send All Blocks (model 462). All tag ITEMs are fixed and cannot be changed.

ITEM	Data Name	CSV Tags in SCADA Software
		Tag ITEM (fixed)
000	Stop block operation command	MT_ST
003	Execution error display	ERR
008	X1 input	X1
009	K1 gain	K1
010	K2 gain	K2
011	K3 gain	K3
012	Segment point	A1
013	Output	Y1

Block Model	Block Name	Block Address
<134>	Low-end Cutout	100 to 349

Outline

This function block sets output to zero close to the zero point of single analog signals.

Block diagram

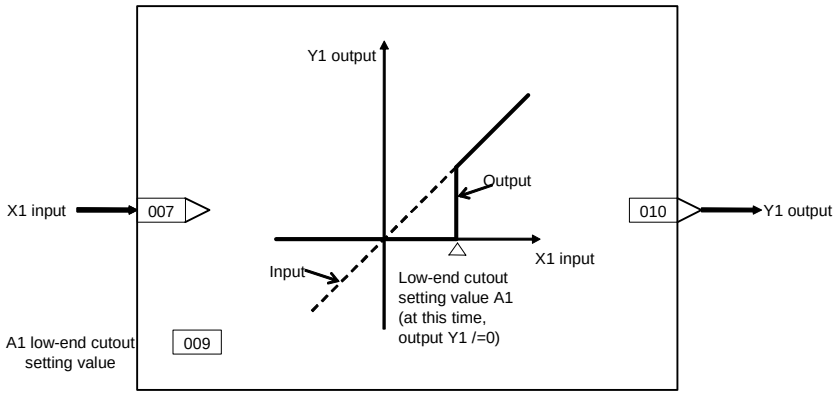

ITEM list

*1:On the CX-Process Monitor, the R/W mode is indicated in the Tuning screen or in the Control screen.

ITEM TYPE	ITEM	Symbol	Data Description	Data Range	Default	COLD start initialization	R/W Mode R: Read, W: Write, R/W: R/W-enabled, -: R/W-disabled Note: r and r/w: Read and read/write for validate action or monitor run status by CX-Process Tool or Monitor, (S): Initial setting data, (O): Operation data					Data Length (bytes)
							According to CX-Process Tool	According to CX-Process Monitor *1	According to ITEM Setting block	According to Step Ladder Program	Send/ Receive All Blocks	
Contact input	000		Stop block operation command (0: Cancel stop, 1: Stop)	0, 1	0		–	–	–	–	S/R	1
Parameter	001		Comment	23 characters	Block name		R/W(S)	–	–	–	–	24
	002		Block Model: Low-end Cutout	134	134		R/W(S)	–	–	–	–	2
Special	003		Execution error display 0: Normal, Other: Error (See Appendix "Execution Error Code List.")		0000		R	–	–	–	S	2
Parameter	004		Operation cycle (sec) 0: Common, 1: 0.1, 2: 0.2, 3: 0.5, 4: 1, 5: 2	0 to 5	0		R/W(S)	–	–	–	–	2
Analog input connection information	007		X1 source designation BBB: Block address, III: ITEM No.	BBBIII	000000		R/W(S)	–	–	–	–	4
Analog input	008	X1	Input	±320.00%	0.00		r	–	–	–	S	2
Parameter	009	A1	Low-end cutout setting	0 to 320.00%	0.00		R/W(O)	–	W	–	S/R	2
Analog output	010	Y1	Output	±320.00%	0.00		r/w	–	–	–	S	2

List of tag ITEMs on SCADA software

The following tag ITEMs are used to specify ITEMs with CSV tags from SCADA software when sending/receiving data to/from the CPU Unit using Receive All Blocks (model 461)/Send All Blocks (model 462). All tag ITEMs are fixed and cannot be changed.

ITEM	Data Name	CSV Tags in SCADA Software
		Tag ITEM (fixed)
000	Stop block operation command	MT_ST
003	Execution error display	ERR
008	X1 input	X1
009	Low-end cutout setting	A1
010	Output	Y1

Block Model	Block Name	Block Address
<135>	Segment Linearizer	100 to 349

Outline

This function block converts single analog signals to 15 segments before the signal is output.

•15 segments (16 segment points) are possible.
•When the input signal value is out of the setting range, Y1 output becomes the value of B0 or final Bn, and can be used jointly with the high/low limit function.
•Set so that the following input condition is satisfied:
A1<A2<A3< ... <An
For example, if input is set as follows:
A1<A2<A3>A4 ... > An

Then, input A4 onwards up to An becomes a fixed output value.

Function block applications

•Control of control targets having non-linear static characteristics (e.g. variable gain control)
•Compensation of control targets having non-linear characteristics

Block diagram

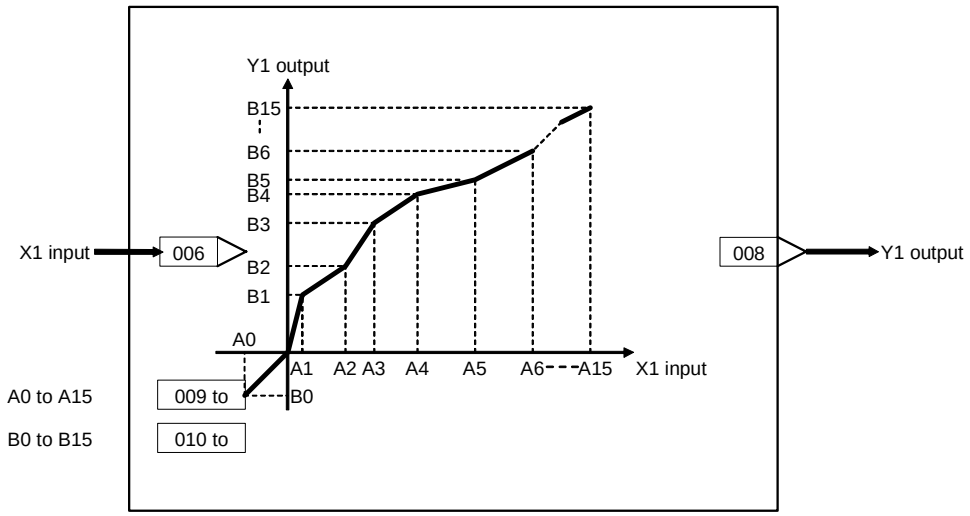

ITEM list

*1:On the CX-Process Monitor, the R/W mode is indicated in the Tuning screen or in the Control screen.

ITEM TYPE	ITEM	Symbol	Data Description	Data Range	Default	COLD start initialization	R/W Mode R: Read, W: Write, R/W: R/W-enabled, -: R/W-disabled Note: r and r/w: Read and read/write for validate action or monitor run status by CX-Process Tool or Monitor, (S): Initial setting data, (O): Operation data					Data Length (bytes)
							According to CX-Process Tool	According to CX-Process Monitor *1	According to ITEM Setting block	According to Step Ladder Program	Send/Receive All Blocks	
Contact input	000		Stop block operation command (0: Cancel stop, 1: Stop)	0, 1	0		–	–	–	–	S/R	1
Parameter	001		Comment	23 characters	Block name		R/W(S)	–	–	–	–	24
	002		Block Model: Segment Linearizer	135	135		R/W(S)	–	–	–	–	2
Special	003		Execution error display 0: Normal, Other: Error (See Appendix "Execution Error Code List.")		0000		r	–	–	–	S	2
Parameter	004		Operation cycle (sec) 0: Common, 1: 0.1, 2: 0.2, 3: 0.5, 4: 1, 5: 2	0 to 5	0		R/W(S)	–	–	–	–	2
Analog input connection information	006		X1 source designation BBB: Block address, III: ITEM No.	BBBIII	000000		R/W(S)	–	–	–	–	4
Analog input	007	X1	Input	±320.00%	0.00		r	–	–	–	S	2
Analog output	008	Y1	Output	±320.00%	0.00		r/w	–	–	–	S	2
Parameter	009	A0	A0 input	±320.00%	-320.00		R/W(O)	–	W	–	–	2
	010	B0	B0	±320.00%	0.00		R/W(O)	–	W	–	–	2
	011	A1	A1 input	±320.00%	-280.00		R/W(O)	–	W	–	–	2
	012	B1	B1 output	±320.00%	80.00		R/W(O)	–	W	–	–	2
	013	A2	A2 input	±320.00%	-240.00		R/W(O)	–	W	–	–	2
	014	B2	B2 output	±320.00%	0.00		R/W(O)	–	W	–	–	2
	015	A3	A3 input	±320.00%	-200.00		R/W(O)	–	W	–	–	2
	016	B3	B3 output	±320.00%	80.00		R/W(O)	–	W	–	–	2
	017	A4	A4 input	±320.00%	-160.00		R/W(O)	–	W	–	–	2
	018	B4	B4 output	±320.00%	0.00		R/W(O)	–	W	–	–	2
	019	A5	A5 input	±320.00%	-120.00		R/W(O)	–	W	–	–	2
	020	B5	B5 output	±320.00%	80.00		R/W(O)	–	W	–	–	2
	021	A6	A6 input	±320.00%	-80.00		R/W(O)	–	W	–	–	2
	022	B6	B6 output	±320.00%	0.00		R/W(O)	–	W	–	–	2
	023	A7	A7 input	±320.00%	-40.00		R/W(O)	–	W	–	–	2
	024	B7	B7 output	±320.00%	80.00		R/W(O)	–	W	–	–	2
	025	A8	A8 input	±320.00%	40.00		R/W(O)	–	W	–	–	2
	026	B8	B8 output	±320.00%	0.00		R/W(O)	–	W	–	–	2
	027	A9	A9 input	±320.00%	80.00		R/W(O)	–	W	–	–	2
	028	B9	B9 output	±320.00%	80.00		R/W(O)	–	W	–	–	2
	029	A10	A10 input	±320.00%	120.00		R/W(O)	–	W	–	–	2
	030	B10	B10 output	±320.00%	0.00		R/W(O)	–	W	–	–	2
	031	A11	A11 input	±320.00%	160.00		R/W(O)	–	W	–	–	2
	032	B11	B11 output	±320.00%	80.00		R/W(O)	–	W	–	–	2
	033	A12	A12 input	±320.00%	200.00		R/W(O)	–	W	–	–	2
	034	B12	B12 output	±320.00%	0.00		R/W(O)	–	W	–	–	2
	035	A13	A13 input	±320.00%	240.00		R/W(O)	–	W	–	–	2
	036	B13	B13 output	±320.00%	80.00		R/W(O)	–	W	–	–	2
	037	A14	A14 input	±320.00%	280.00		R/W(O)	–	W	–	–	2
	038	B14	B14 output	±320.00%	0.00		R/W(O)	–	W	–	–	2
	039	A15	A15 input	±320.00%	320.00		R/W(O)	–	W	–	–	2
	040	B15	B15 output	±320.00%	80.00		R/W(O)	–	W	–	–	2

List of tag ITEMs on SCADA software

The following tag ITEMs are used to specify ITEMs with CSV tags from SCADA software when sending/receiving data to/from the CPU Unit using Receive All Blocks (model 461)/Send All Blocks (model 462). All tag ITEMs are fixed and cannot be changed.

ITEM	Data Name	CSV Tags in SCADA Software
		Tag ITEM (fixed)
000	Stop block operation command	MT_ST
003	Execution error display	ERR
007	X1 input	X1
008	Output	Y1

Block Model	Block Name	Block Address
<136>	Temperature and Pressure Correction	100 to 349

Outline

This function block corrects for the influence of temperature and pressure differences in measuring a gaseous flow by a differential pressure flowmeter.

$$Y1 = K1 \times X1 \sqrt{\frac{K2 \times X2 + A2}{K3 \times X3 + A3}}$$

•Internal operation is executed at double precision (32 bits).
•Temperature or pressure can also be corrected individually.
•X1 flow signal must be converted to a linear signal by extracting the square root before input.

Note: Calculate 100% in the calculation formula as 1.0. Output becomes 0 when the result in □ becomes a minus number.

Block diagram

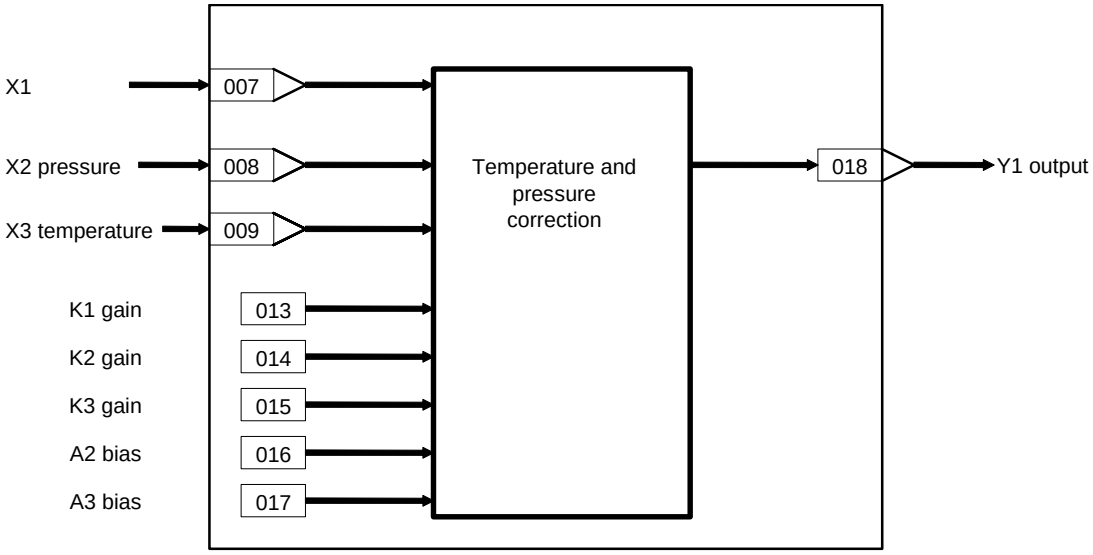

ITEM list

*1:On the CX-Process Monitor, the R/W mode is indicated in the Tuning screen or in the Control screen.

ITEM TYPE	ITEM	Symbol	Data Description	Data Range	Default	COLD start initialization	R/W Mode R: Read, W: Write, R/W: R/W-enabled, -: R/W-disabled Note: r and r/w: Read and read/write for validate action or monitor run status by CX-Process Tool or Monitor, (S): Initial setting data, (O): Operation data					Data Length (bytes)
							According to CX-Process Tool	According to CX-Process Monitor *1	According to ITEM Setting block	According to Step Ladder Program	Send/ Receive All Blocks	
Contact input	000		Stop block operation command (0: Cancel stop, 1: Stop)	0, 1	0		–	–	–	–	S/R	1
Parameter	001		Comment	23 characters	Block name		R/W(S)	–	–	–	–	24
	002		Block Model: Temperature and Pressure Correction	136	136		R/W(S)	–	–	–	–	2
Special	003		Execution error display 0: Normal, Other: Error (See Appendix "Execution Error Code List.")		0000		r	–	–	–	S	2
Parameter	004		Operation cycle (sec) 0: Common, 1: 0.1, 2: 0.2, 3: 0.5, 4: 1, 5: 2	0 to 5	0		R/W(S)	–	–	–	–	2
Analog input connection information	007		X1 source designation BBB: Block address, III: ITEM No.	BBBIII	000000		R/W(S)	–	–	–	–	4
	008		X2 source designation BBB: Block address, III: ITEM No.	BBBIII	000000		R/W(S)	–	–	–	–	4
	009		X3 source designation BBB: Block address, III: ITEM No.	BBBIII	000000		R/W(S)	–	–	–	–	4
Analog input	010	X1	Flow input	±320.00%	0.00		r	–	–	–	S	2
	011	X2	Pressure input	±320.00%	0.00		r	–	–	–	S	2
	012	X3	Temperature input	±320.00%	0.00		r	–	–	–	S	2
Parameter	013	K1	K1 gain	±10.000	1.000		R/W(O)	–	W	–	S/R	2
	014	K2	K2 gain	±10.000	1.000		R/W(O)	–	W	–	S/R	2
	015	K3	K3 gain	±10.000	1.000		R/W(O)	–	W		S/R	2
	016	A2	A2 bias	±320.00%	0.00		R/W(O)	–	W	–	S/R	2
	017	A3	A3 bias	±320.00%	0.00		R/W(O)	–	W	–	S/R	2
Analog output	018	Y1	Output	±320.00%	0.00		r/w	–	–	–	S	2

List of tag ITEMs on SCADA software

The following tag ITEMs are used to specify ITEMs with CSV tags from SCADA software when sending/receiving data to/from the CPU Unit using Receive All Blocks (model 461)/Send All Blocks (model 462). All tag ITEMs are fixed and cannot be changed.

ITEM	Data Name	CSV Tags in SCADA Software
		Tag ITEM (fixed)
000	Stop block operation command	MT_ST
003	Execution error display	ERR
010	X1 flow input	X1
011	X2 pressure input	X2
012	X3 temperature input	X3
013	K1 gain	K1
014	K2 gain	K2
015	K3 gain	K3
016	A2 bias	A2
017	A3 bias	A3
018	Output	Y1

Block Model	Block Name	Block Address
<141>	First-order Lag	100 to 349

Outline

This function block performs first-order lag operation on single analog signals that is required for reducing pulsation in the input signal.
•When S1 reset switch is set to 1 (ON), the output equals input.

$$Y1(s) = \frac{X1(s)}{1 + T \cdot s}$$

Note:Calculate 100% in the calculation formula as 1.0.
Note:When a cold start is performed, the values that were held before output OFF or before running was stopped are cleared from memory. These values are held when a hot start is performed.

Function block applications

Filtering of PV input (elimination of noise or pulsation)

Block diagram

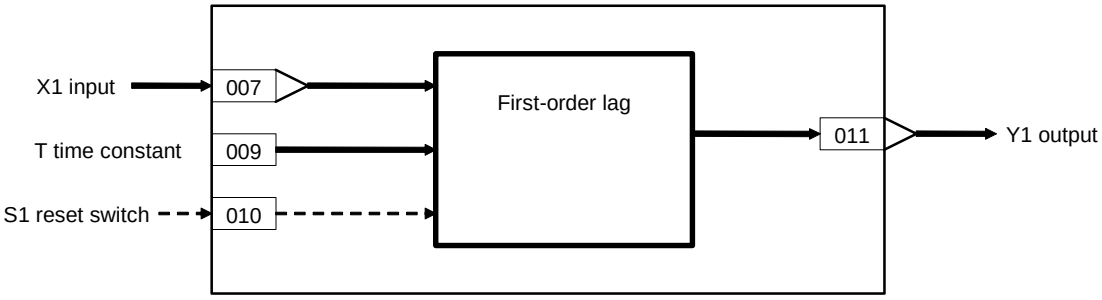

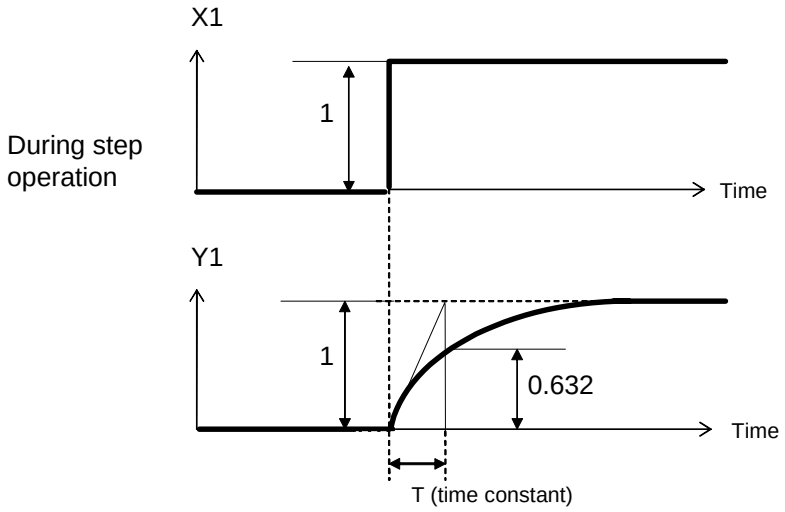

ITEM list

*1:On the CX-Process Monitor, the R/W mode is indicated in the Tuning screen or in the Control screen.

ITEM TYPE	ITEM	Symbol	Data Description	Data Range	Default	COLD start initialization	R/W Mode R: Read, W: Write, R/W: R/W-enabled, -: R/W-disabled Note: r and r/w: Read and read/write for validate action or monitor run status by CX-Process Tool or Monitor, (S): Initial setting data, (O): Operation data					Data Length (bytes)
							According to CX-Process Tool	According to CX-Process Monitor *1	According to ITEM Setting block	According to Step Ladder Program	Send/ Receive All Blocks	
Contact input	000		Stop block operation command (0: Cancel stop, 1: Stop)	0, 1	0		–	–	–	–	S/R	1
Parameter	001		Comment	23 characters	Block name		R/W(S)	–	–	–	–	24
	002		Block Model: First-order Lag	141	141		R/W(S)	–	–	–	–	2
Special	003		Execution error display 0: Normal, Other: Error (See Appendix "Execution Error Code List.")		0000		r	–	–	–	S	2
Parameter	004		Operation cycle (s) 0: Common, 1: 0.1, 2: 0.2, 3: 0.5, 4: 1, 5: 2	0 to 5	0		R/W(S)	–	–	–	–	2
Analog input connection information	007		X1 source designation BBB: Block address, III: ITEM No.	BBBIII	000000		R/W(S)	–	–	–	–	4
Analog input	008	X1	Input	±320.00%	0.00		r	–	–	–	S	2
Parameter	009	T	Time constant (0: No delay)	0 to 999.9s	0.0		R/W(O)	–	W	–	S/R	2
Contact input	010	S1	Reset switch (1: Y1=X1)	0, 1	0		R/W(O)	–	–	R/W	S/R	1
Analog output	011	Y1	Output	±320.00%	0.00		r/w	–	–	–	S	2

List of tag ITEMs on SCADA software

The following tag ITEMs are used to specify ITEMs with CSV tags from SCADA software when sending/receiving data to/from the CPU Unit using Receive All Blocks (model 461)/Send All Blocks (model 462). All tag ITEMs are fixed and cannot be changed.

ITEM	Data Name	CSV Tags in SCADA Software
		Tag ITEM (fixed)
000	Stop block operation command	MT_ST
003	Execution error display	ERR
008	Input	X1
009	Time constant	T
010	Reset switch	S1
011	Output	Y1

Block Model	Block Name	Block Address
<143>	Rate-of-change Limit	100 to 349

Outline

This function block performs rate-of-change limiting on single analog signals to reduce pulsation in the input signal.

When S1 reset switch is set to 1 (ON), the output equals input.
The time unit for the rate-of-change setting can be set to seconds, minutes, or hours. (Supported from version 2.50 of the Loop Control Unit.)

Note: When a cold start is performed, the values that were held before output OFF or before running was stopped are cleared from memory. These values are held when a hot start is performed.

Block diagram

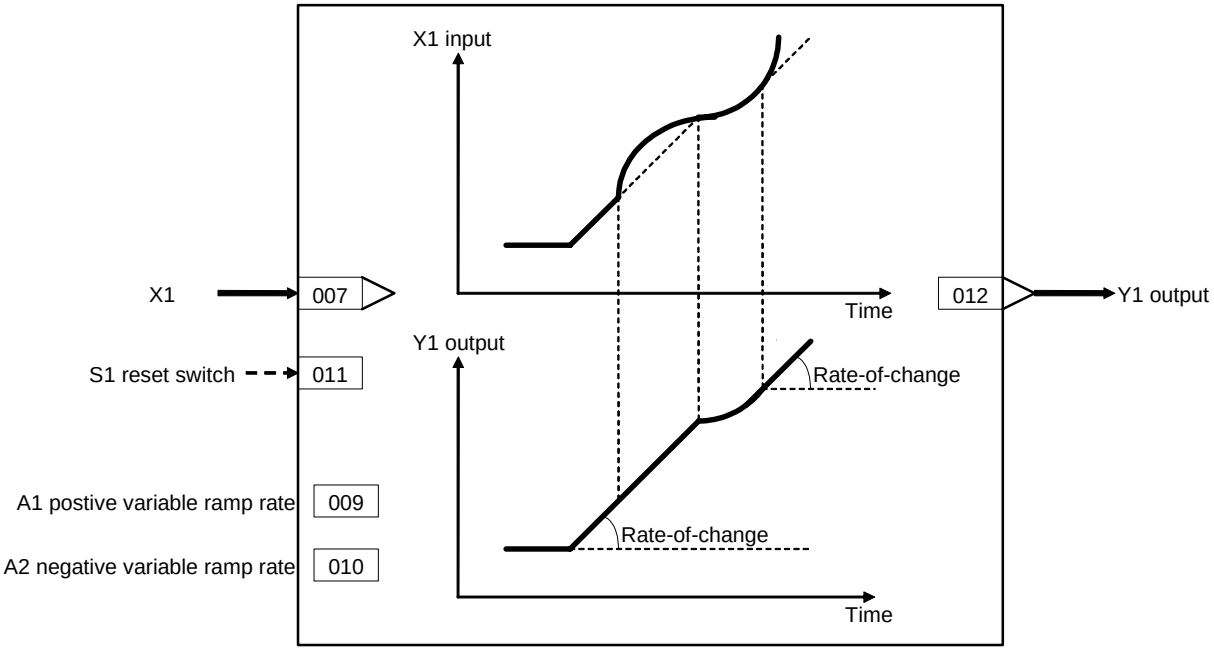

ITEM list

*1:On the CX-Process Monitor, the R/W mode is indicated in the Tuning screen or in the Control screen.

ITEM TYPE	ITEM	Symbol	Data Description	Data Range	Default	COLD start initialization	R/W Mode R: Read, W: Write, R/W: R/W-enabled, -: R/W-disabled Note: r and r/w: Read and read/write for validate action or monitor run status by CX-Process Tool or Monitor, (S): Initial setting data, (O): Operation data					Data Length (bytes)
							According to CX-Process Tool	According to CX-Process Monitor *1	According to ITEM Setting block	According to Step Ladder Program	Send/ Receive All Blocks	
Contact input	000		Stop block operation command (0: Cancel stop, 1: Stop)	0, 1	0		–	–	–	–	S/R	1
Parameter	001		Comment	23 characters	Block name		R/W(S)	–	–	–	–	24
	002		Block Model: Rate-of-change Limit	143	143		R/W(S)	–	–	–	–	2
Special	003		Execution error display 0: Normal, Other: Error (See Appendix "Execution Error Code List.")		0000		r	–	–	–	S	2
Parameter	004		Operation cycle (sec) 0: Common, 1: 0.1, 2: 0.2, 3: 0.5, 4: 1, 5: 2	0 to 5	0		R/W(S)	–	–	–	–	2
Analog input connection information	007		X1 source designation BBB: Block address, III: ITEM No.	BBBIII	000000		R/W(S)	–	–	–	–	4
Analog input	008	X1	Input	±320.00%	0.00		r	–	–	–	S	2
Parameter	009	A1	Positive ramp rate Note: Time unit set in ITEM 013. (Rate-of-change limit OFF when 0.00)	0.00 to 320.00%/time unit	320.00		R/W(O)	–	W	–	S/R	2
	010	A2	Negative ramp rate Note: Time unit set in ITEM 013. (Rate-of-change limit OFF when 0.00)	0.00 to 320.00%/time unit	320. 00		R/W(O)	–	W	–	S/R	2
Contact input/ parameter	011	S1	Reset Switch (1: Y1=X1)	0, 1	0		R/W(O)	–	–	R/W	S/R	1
Analog output	012	Y1	Output	±320.00%	0.00		–	–	–	–	S	2
Parameter	013*2	TMU	Time unit 0: sec, 1: min, 2: hr	0 to 2	0		R/W (S)	–	–	–	S/R	1

*2: This ITEM was added in Loop Control Unit Ver.2.50.

List of tag ITEMs on SCADA software

The following tag ITEMs are used to specify ITEMs with CSV tags from SCADA software when sending/receiving data to/from the CPU Unit using Receive All Blocks (model 461)/Send All Blocks (model 462). All tag ITEMs are fixed and cannot be changed.

ITEM	Data Name	CSV Tags in SCADA Software
		Tag ITEM (fixed)
000	Stop block operation command	MT_ST
003	Execution error display	ERR
008	Input	X1
009	Positive ramp rate	A1
010	Negative ramp rate	A2
011	Reset Switch	S1
012	Output	Y1
013	Time unit	TMU

Block Model	Block Name	Block Address
<145>	Moving Average	100 to 349

Outline

This function block performs moving average operation on single analog signals.

•There are two data sampling modes: sampling at fixed time intervals, and sampling of individual data items each time that an external contact turns ON. Selective use of these modes allows you to easily execute moving average operation on signals outputs from a batch type analyzer, for example.

Note: When a cold start is performed, the values that were held before output OFF or before running was stopped are cleared from memory. These values are held when a hot start is performed.

Block diagram

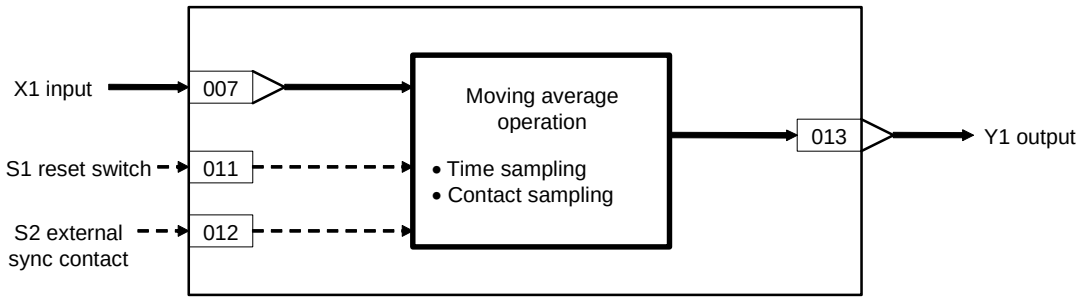

Supplementary note

By the moving average operation, the average value of n number of samples is taken and output with the oldest item of data discarded when a new item of data is added.

ITEM list

*1:On the CX-Process Monitor, the R/W mode is indicated in the Tuning screen or in the Control screen.

ITEM TYPE	ITEM	Symbol	Data Description	Data Range	Default	COLD start initialization	R/W Mode R: Read, W: Write, R/W: R/W-enabled, -: R/W-disabled Note: r and r/w: Read and read/write for validate action or monitor run status by CX-Process Tool or Monitor, (S): Initial setting data, (O): Operation data					Data Length (bytes)
							According to CX-Process Tool	According to CX-Process Monitor *1	According to ITEM Setting block	According to Step Ladder Program	Send/ Receive All Blocks	
Contact input	000		Stop block operation command (0: Cancel stop, 1: Stop)	0, 1	0		–	–	–	–	S/R	1
Parameter	001		Comment	23 characters	Block name		R/W(S)	–	–	–	–	24
	002		Block Model: Moving Average	145	145		R/W(S)	–	–	–	–	2
Special	003		Execution error display 0: Normal, Other: Error (See Appendix "Execution Error Code List.")		0000		r	–	–	–	S	2
Parameter	004		Operation cycle (sec) 1: 0.1, 2: 0.2, 3: 0.5, 4: 1	1 to 4	4		R/W(S)	–	–	–	–	2
	006	M	Sampling mode 0: Time, 1: Sync with external contact S2	0, 1	0		R/W(S)	–	–	–	–	1
Analog input connection information	007		X1 source designation BBB: Block address, III: ITEM No.	BBBIII	000000		R/W(S)	–	–	–	–	4
Analog input	008	X1	Input	±320.00%	0.00		r	–	–	–	S	2
Parameter	009	H	Sampling cycle 0: Sample on operationg cycle, 1 to 9999: Sample every 1 to 9999 s Note: This setting is ignored if the sampling mode is set to 1 (sync with external contact S2)	0, 1 to 9999s	0		R/W(S)	–	W	–	S/R	2
	010	N	Number of samples	1 to 20	16		W(S)	–	–	–	S/R	1
Contact input	011	S1	Reset switch (1: Y1=X1)	0, 1	0		R/W(O)	–	–	R/W	S/R	1
	012	S2	External sync contact (DIFU/DIFD commands used)	0, 1	0		R/W(O)	–	–	R/W	S/R	1
Analog output	013	Y1	Output	±320.00%	0.00		r/w	–	–	–	S	2

List of tag ITEMs on SCADA software

The following tag ITEMs are used to specify ITEMs with CSV tags from SCADA software when sending/receiving data to/from the CPU Unit using Receive All Blocks (model 461)/Send All Blocks (model 462). All tag ITEMs are fixed and cannot be changed.

ITEM	Data Name	CSV Tags in SCADA Software
		Tag ITEM (fixed)
000	Stop block operation command	MT_ST
003	Execution error display	ERR
008	Input	X1
009	Sampling cycle	H
010	Number of samples	N
011	Reset switch	S1
012	External sync contact	S2
013	Output	Y1

Block Model	Block Name	Block Address
<147>	Lead/Delay	100 to 349

Outline

This function block performs lead/delay operation of control signals on single analog signals.

$$Y1(s) = K\frac{1 + T1 \cdot s}{1 + T2 \cdot s}$$

Note: When a cold start is performed, the values that were held before output OFF or before running was stopped are cleared from memory. These values are held when a hot start is performed.

Function block applications

Feedforward control, non-interacting control (e.g. used when counteracting the influence of disturbance)

Block diagram

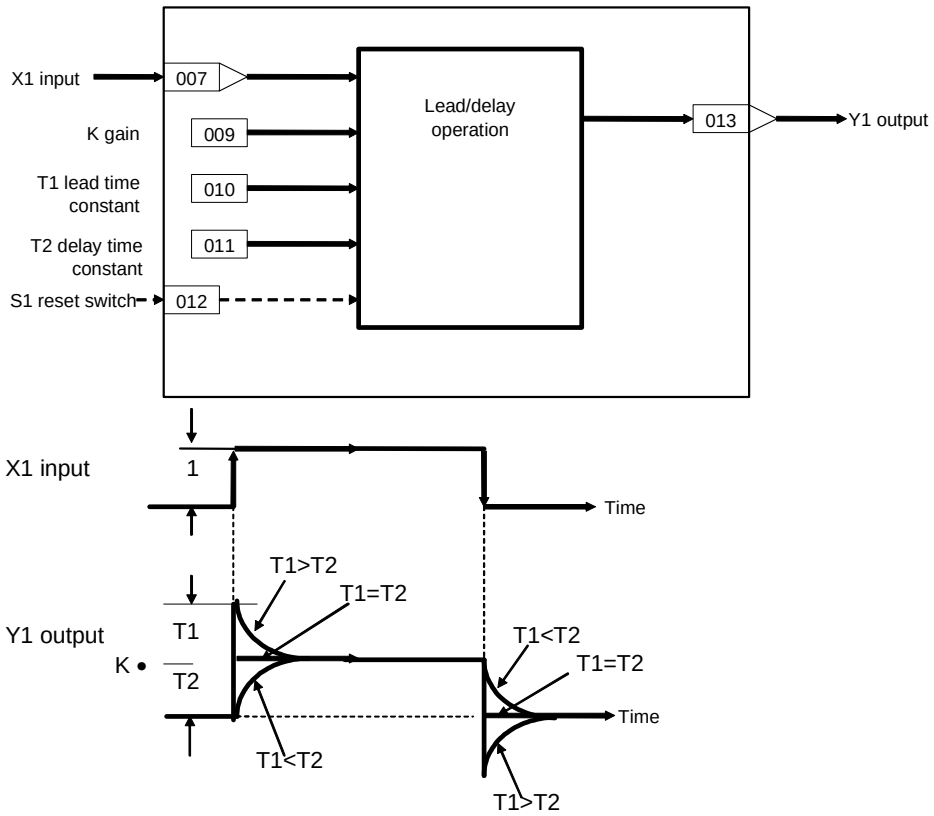

ITEM list

*1:On the CX-Process Monitor, the R/W mode is indicated in the Tuning screen or in the Control screen.

ITEM TYPE	ITEM	Symbol	Data Description	Data Range	Default	COLD start initialization	R/W Mode R: Read, W: Write, R/W: R/W-enabled, -: R/W-disabled Note: r and r/w: Read and read/write for validate action or monitor run status by CX-Process Tool or Monitor, (S): Initial setting data, (O): Operation data					Data Length (bytes)
							According to CX-Process Tool	According to CX-Process Monitor *1	According to ITEM Setting block	According to Step Ladder Program	Send/ Receive All Blocks	
Contact input	000		Stop block operation command (0: Cancel stop, 1: Stop)	0, 1	0		–	–	–	–	S/R	1
Parameter	001		Comment	23 characters	Block name		R/W(S)	–	–	–	–	24
	002		Block Model: Lead/Delay	147	147		R/W(S)	–	–	–	–	2
Special	003		Execution error display 0: Normal, Other: Error (See Appendix "Execution Error Code List.")		0000		r	–	–	–	S	2
Parameter	004		Operation cyce (s) 0: Common, 1: 0.1, 2: 0.2, 3: 0.5, 4: 1, 5: 2	0 to 5	0		R/W(S)	–	–	–	–	2
Analog input connection information	007		X1 source designation BBB: Block address, III: ITEM No.	BBBIII	000000		R/W(S)	–	–	–	–	4
Analog input	008	X1	Input	±320.00%	0.00		r	–	–	–	S	2
Parameter	009	K	Gain	±10.000	1.000		R/W(O)	–	W	–	S/R	2
	0010	T1	Time constant (0: No Lead)	0 to 999.9s	1.0		R/W(O)	–	W	–	S/R	2
	0011	T2	Time constant (0: No delay)	0 to 999.9s	10.0		R/W(O)	–	W	–	S/R	2
Contact input	012	S1	Reset switch (1:Y1=X1)	0, 1	0		R/W(O)	–	–	R/W	S/R	1
Analog output	013	Y1	Output	±320.00%	0.00		r/w	–	–	–	S	2

List of tag ITEMs on SCADA software

The following tag ITEMs are used to specify ITEMs with CSV tags from SCADA software when sending/receiving data to/from the CPU Unit using Receive All Blocks (model 461)/Send All Blocks (model 462). All tag ITEMs are fixed and cannot be changed.

ITEM	Data Name	CSV Tags in SCADA Software
		Tag ITEM (fixed)
000	Stop block operation command	MT_ST
003	Execution error display	ERR
008	Input	X1
009	Gain	K
010	Time constant (No Lead)	T1
011	Time constant (No delay)	T2
012	Reset switch	S1
013	Output	Y1

Block Model	Block Name	Block Address
<148>	Dead Time	001 to 032

Outline

This function block performs dead time and first-order lag operations on single analog signals.

$$Y1(s) = \frac{e^{-Ls}}{1 + T \cdot s} X1(s)$$

•New data is sampled at each sampling cycle H (seconds) for number of samples (N) on the data to be held. The data previous to dead time L seconds (= H x N seconds) is output as the output signal. In other words, the output is delayed by L seconds after the input.
•When the lag time constant is set, the first-order lag operation is performed after time L (dead time) has elapsed.

Note: •The sampling cycle (ITEM010) takes priority over operation cycle (ITEM004).
•When a cold start is performed, the values that were held before output OFF or before running was stopped are cleared from memory. These values are held when a hot start is performed.

Block diagram

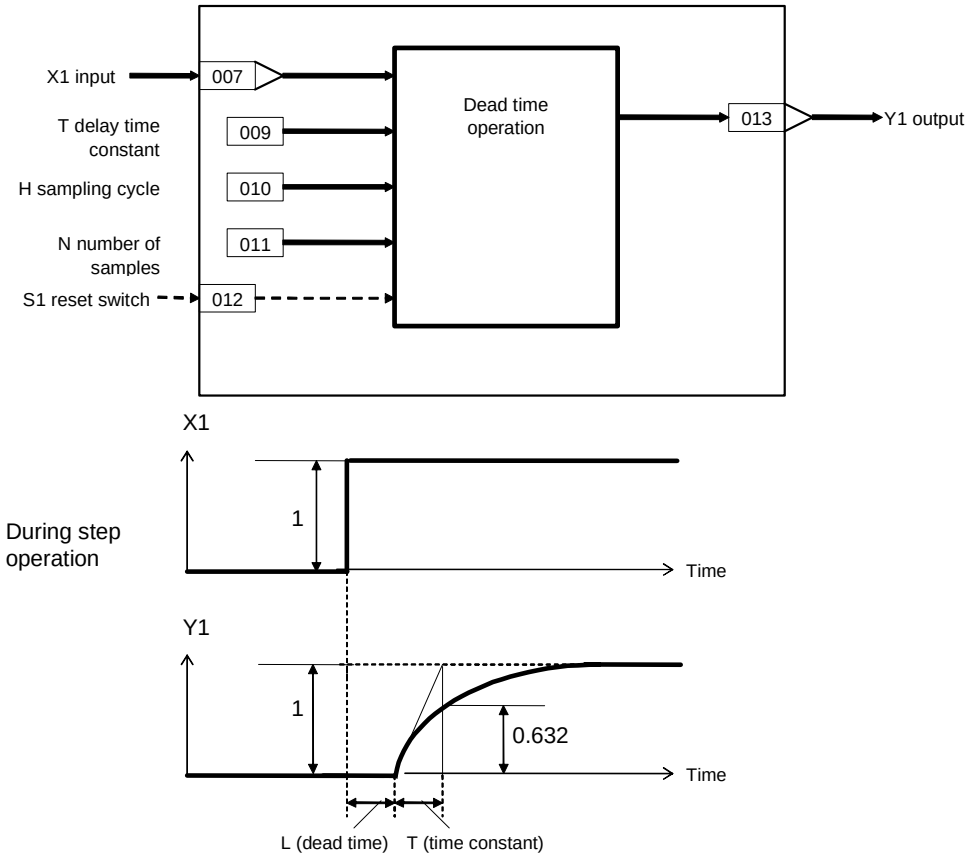

ITEM list

*1:On the CX-Process Monitor, the R/W mode is indicated in the Tuning screen or in the Control screen.

ITEM TYPE	ITEM	Symbol	Data Description	Data Range	Default	COLD start initialization	R/W Mode R: Read, W: Write, R/W: R/W-enabled, -: R/W-disabled Note: r and r/w: Read and read/write for validate action or monitor run status by CX-Process Tool or Monitor, (S): Initial setting data, (O): Operation data					Data Length (bytes)
							According to CX-Process Tool	According to CX-Process Monitor *1	According to ITEM Setting block	According to Step Ladder Program	Send/ Receive All Blocks	
Contact input	000		Stop block operation command (0: Cancel stop, 1: Stop)	0, 1	0		–	–	–	–	S/R	1
Parameter	001		Comment	23 characters	Block name		R/W(S)	–	–	–	–	24
	002		Block Model: Dead Time	148	148		R/W(S)	–	–	–	–	2
Special	003		Execution error display 0: Normal, Other: Error (See Appendix "Execution Error Code List.")		0000		r	–	–	–	S	2
Parameter	004		Operation cycle (sec) 0: Common, 1: 0.1, 2: 0.2, 3: 0.5, 4: 1, 5: 2	0 to 5	0		R/W(S)	–	–	–	–	2
Analog input connection information	007		X1 source designation BBB: Block address, III: ITEM No.	BBBIII	000000		R/W(S)	–	–	–	–	4
Analog input	008	X1	Input	±320.00%	0.00		r	–	–	–	S	2
Parameter	009	T	Time constant (0: No delay)	0 to 999.9s	0.0		R/W(O)	–	W	–	S/R	2
	010	H	Sampling cycle (0: Operation cycle)	0 to 9999s	0		R/W(S)	–	W	–	S/R	2
	011	N	Number of samples (0: No dead time)	0 to 20	20		R/W(S)	–	–	–	S/R	1
Contact input	012	S1	Reset switch (1:Y1=X1)	0, 1	0		R/W(O)	–	–	R/W	S/R	1
Analog output	013	Y1	Output	±320.00%	0.00		r/w	–	–	–	S	2

List of tag ITEMs on SCADA software

The following tag ITEMs are used to specify ITEMs with CSV tags from SCADA software when sending/receiving data to/from the CPU Unit using Receive All Blocks (model 461)/Send All Blocks (model 462). All tag ITEMs are fixed and cannot be changed.

ITEM	Data Name	CSV Tags in SCADA Software
		Tag ITEM (fixed)
000	Stop block operation command	MT_ST
003	Execution error display	ERR
008	Input	X1
009	Time constant (0: No delay)	T
010	Sampling cycle	H
011	Number of samples	N
012	Reset switch	S1
013	Output	Y1

Block Model	Block Name	Block Address
<149>	Dead Time Compensation	100 to 349

Outline

This function block performs PID control using the Smith predictor.

$$Y1(s) = K\frac{1-e^{-Ls}}{1+T\cdot S}X1(s)$$

•This function block is applied to processes with long dead time and processes whose dead time does not change much.
•Set dead time (L) and time constant (T) to the same values as the dead time and time constant of the process (control target).

Note: When a cold start is performed, the values that were held before output OFF or before running was stopped are cleared from memory. These values are held when a hot start is performed.

Function block applications

Control using the Smith predictor

Block diagram

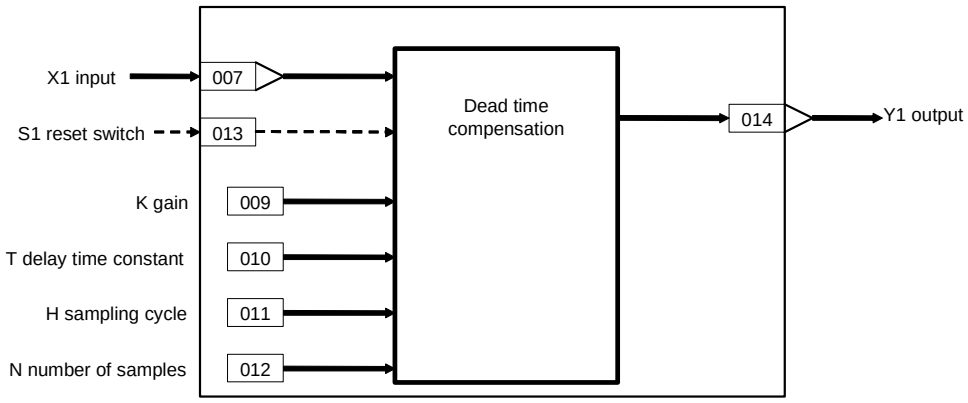

ITEM list

*1:On the CX-Process Monitor, the R/W mode is indicated in the Tuning screen or in the Control screen.

ITEM TYPE	ITEM	Symbol	Data Description	Data Range	Default	COLD start initialization	R/W Mode R: Read, W: Write, R/W: R/W-enabled, -: R/W-disabled Note: r and r/w: Read and read/write for validate action or monitor run status by CX-Process Tool or Monitor, (S): Initial setting data, (O): Operation data					Data Length (bytes)
							According to CX-Process Tool	According to CX-Process Monitor *1	According to ITEM Setting block	According to Step Ladder Program	Send/Receive All Blocks	
Contact input	000		Stop block operation command (0: Cancel stop, 1: Stop)	0, 1	0		–	–	–	–	S/R	1
Parameter	001		Comment	23 characters	Block name		R/W(S)	–	–	–	–	24
	002		Block Model: Dead Time Compensation	149	149		R/W(S)	–	–	–	–	2
Special	003		Execution error display 0: Normal, Other: Error (See Appendix "Execution Error Code List.")		0000		r	–	–	–	S	2
Parameter	004		Operation cycle (sec) 0: Common, 1: 0.1, 2: 0.2, 3: 0.5, 4: 1, 5: 2	0 to 5	0		R/W(S)	–	–	–	–	2
Analog input connection information	007		X1 source designation BBB: Block address, III: ITEM No.	BBBIII	000000		R/W(S)	–	–	–	–	4
Analog input	008	X1	Input	±320.00%	0.00		r	–	–	–	S	2
Parameter	009	K	Gain	±10.000	1.000		R/W(O)	–	W	–	S/R	2
	010	T	Time constant (0: No delay)	0 to 999.9s	0.0		R/W(O)	–	W	–	S/R	2
	011	H	Sampling cycle (0: Operation cycle)	0 to 9999s	0		R/W(S)	–	W	–	S/R	2
	012	N	Number of samples (0: No dead time)	0 to 20	20		R/W(S)	–	W	–	S/R	1
Contact input	013	S1	Reset switch (1:Y1=X1)	0, 1	0		R/W(O)	–	–	R/W	S/R	1
Analog output	014	Y1	Output	±320.00%	0.00		r/w	–	–	–	S	2

List of tag ITEMs on SCADA software

The following tag ITEMs are used to specify ITEMs with CSV tags from SCADA software when sending/receiving data to/from the CPU Unit using Receive All Blocks (model 461)/Send All Blocks (model 462). All tag ITEMs are fixed and cannot be changed.

ITEM	Data Name	CSV Tags in SCADA Software
		Tag ITEM (fixed)
000	Stop block operation command	MT_ST
003	Execution error display	ERR
008	Input	X1
009	Gain	K
010	Time constant	T
011	Sampling cycle	H
012	Number of samples	N
013	Reset switch	S1
014	Output	Y1

Block Model	Block Name	Block Address
<150>	Accumulator for instantaneous value input	100 to 349

Outline

This function block accumulates (totalizes) instantaneous analog signals (e.g. flowrate signals) and outputs 8-digit accumulated value signals within the range 00000000 to 99999999. This function block can also be used for batch control.

•Q2 and Q1 accumulated values become QR preset value (counter rate) assuming that 100% values are continuous as analog signal inputs for the preset time unit (TU: one of seconds, minutes, hours or days).

By accumulation (totalization), analog signals are totalized according to the 0 to 100% range of the actual analog signal input, and accumulated values Q2 and Q1 proportional to these inputs are output at all times.

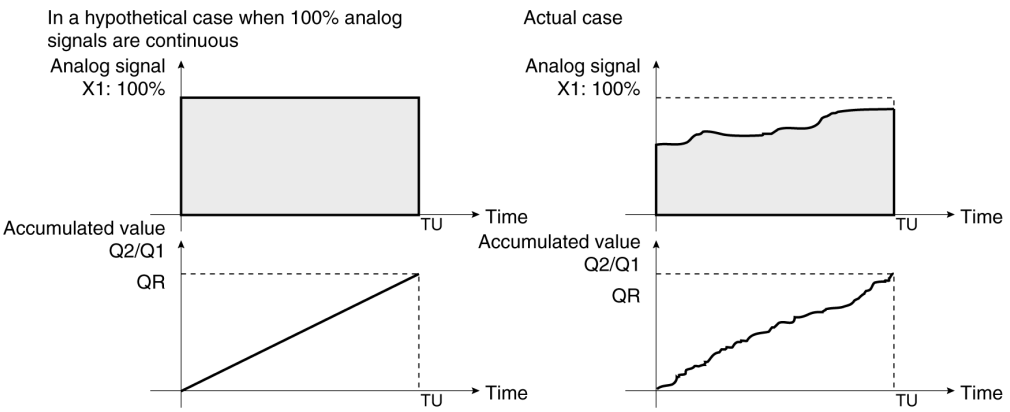

•Accumulated values are divided into upper four digits and lower four digits before they are output. If necessary, join these two sets of digits together for display on a host computer.
•When Qn accumulated value output is used as analog input for other function blocks, the count 9999 is processed as 99.99%.
•When S1 reset switch is set to 1 (ON), the accumulated values Q1 and Q2 are returned to count 0.
•When S3 batch controller reset switch is input, Q3 batch accumulated value becomes count 0, and U1 arrival at preset value is reset to 0 (OFF).
•S2 interrupt switch stops all count operations.
•Minus inputs are regarded as 0% input.

Note: Internally held accumulated values are cleared when a cold start is performed, and are held when a hot start is performed.

Function block applications

Accumulation (totalization) of instantaneous flowrate signals that have been converted to analog values

Block diagram

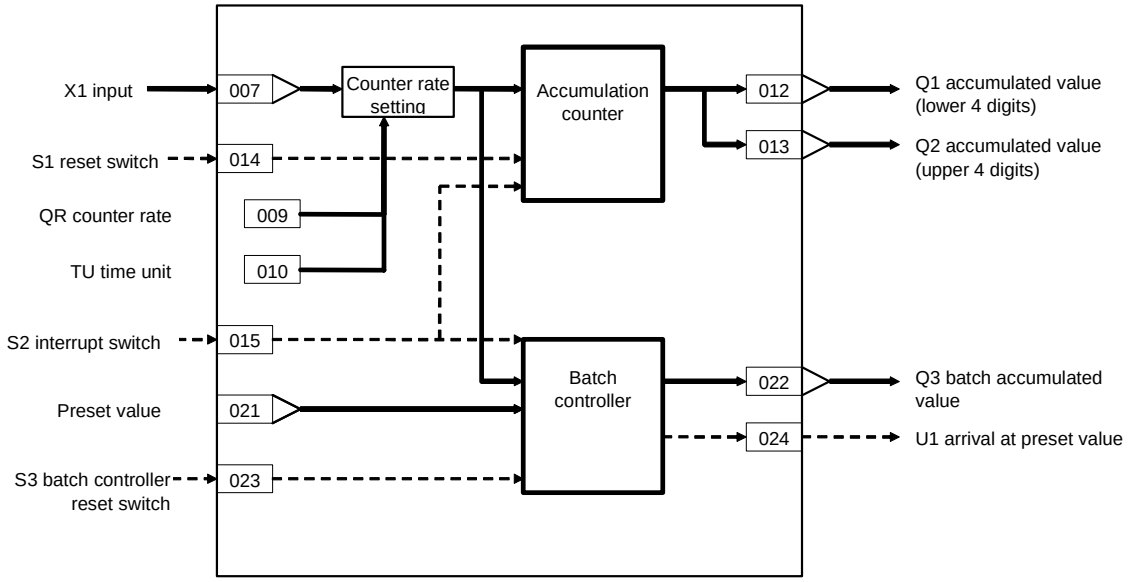

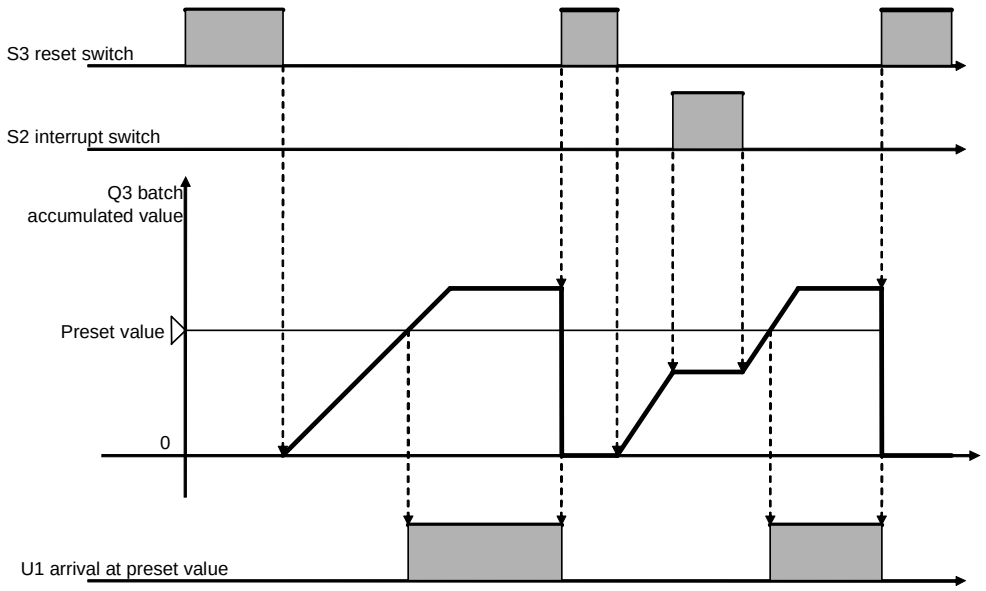

ITEM list

*1:On the CX-Process Monitor, the R/W mode is indicated in the Tuning screen or in the Control screen.

ITEM TYPE	ITEM	Symbol	Data Description	Data Range	Default	COLD start initialization	R/W Mode R: Read, W: Write, R/W: R/W-enabled, -: R/W-disabled Note: r and r/w: Read and read/write for validate action or monitor run status by CX-Process Tool or Monitor, (S): Initial setting data, (O): Operation data					Data Length (bytes)
							According to CX-Process Tool	According to CX-Process Monitor *1	According to ITEM Setting block	According to Step Ladder Program	Send/ Receive All Blocks	
Contact input	000		Stop block operation command (0: Cancel stop, 1: Stop)	0, 1	0		–	–	–	–	S/R	1
Parameter	001		Comment	23 characters	Block name		R/W(S)	–	–	–	–	24
	002		Block Model: Accumulator for instantaneous value input	150	150		R/W(S)	–	–	–	–	2
Special	003		Execution error display 0: Normal, Other: Error (See Appendix "Execution Error Code List.")		0000		r	–	–	–	S	2
Parameter	004		Operation cycle (s) 0: Common, 1: 0.1, 2: 0.2, 3: 0.5, 4: 1, 5: 2	0 to 5	0		R/W(S)	–	–	–	–	2

Instantaneous value input X1

*1:On the CX-Process Monitor, the R/W mode is indicated in the Tuning screen or in the Control screen.

ITEM TYPE	ITEM	Symbol	Data Description	Data Range	Default	COLD start initialization	R/W Mode R: Read, W: Write, R/W: R/W-enabled, -: R/W-disabled Note: r and r/w: Read and read/write for validate action or monitor run status by CX-Process Tool or Monitor, (S): Initial setting data, (O): Operation data					Data Length (bytes)
							According to CX-Process Tool	According to CX-Process Monitor *1	According to ITEM Setting block	According to Step Ladder Program	Send/ Receive All Blocks	
Analog input connection information	007		X1 source designation BBB: Block address, III: ITEM No.	BBBIII	000000		R/W(S)	–	–	–	–	4
Analog input	008	X1	Input	±320.00%	0.00		r	–	–	–	S	2
Parameter	009	QR	Counter rate Assuming that input is 100% for time unit setting TU, set the accumulated value to be displayed. Example) Set TU: 2 and QR: 1500 for 0 to 1500 m^3.	0 to 10000.00	100.00		R/W(O)	–	W	–	–	2
	010	TU	Time unit (0:S, 1:min, 2:hr, 3:day)	0 to 3	0		R/W(S)	–	–	–	S/R	1
Accumulated value output	012	Q1	Accumulated value (lower 4 digits)	0 to 9999	0		r/w	–	–	–	S	2
	013	Q2	Accumulated value (upper 4 digits)	0 to 9999	0		r/w	–	–	–	S	2
Contact input	014	S1	Reset switch (1: Reset)	0, 1	0		R/W(O)	–	–	R/W	S/R	1
	015	S2	Interrupt swiitch (1: Interrupt)	0, 1	0		R/W(O)	–	–	R/W	S/R	1

Batch controller

*1:On the CX-Process Monitor, the R/W mode is indicated in the Tuning screen or in the Control screen.

ITEM TYPE	ITEM	Symbol	Data Description	Data Range	Default	COLD start initialization	R/W Mode R: Read, W: Write, R/W: R/W-enabled, -: R/W-disabled Note: r and r/w: Read and read/write for validate action or monitor run status by CX-Process Tool or Monitor, (S): Initial setting data, (O): Operation data					Data Length (bytes)
							According to CX-Process Tool	According to CX-Process Monitor *1	According to ITEM Setting block	According to Step Ladder Program	Send/ Receive All Blocks	
Parameter	021		Preset value	0000 to 9999	9999		R/W(O)	–	W	–	S/R	2
Accumu-lated value output	022	Q3	Batch accumulated value	0000 to 9999	0		r/w	–	–	–	S	2
Contact input	023	S3	Batch controller reset switch (1: Reset)	0, 1	0		R/W(O)	–	–	R/W	S/R	1
Contact output	024	U1	Arrival at preset value	0, 1	0		–	–	–	R	S	1

List of tag ITEMs on SCADA software

The following tag ITEMs are used to specify ITEMs with CSV tags from SCADA software when sending/receiving data to/from the CPU Unit using Receive All Blocks (model 461)/Send All Blocks (model 462). All tag ITEMs are fixed and cannot be changed.

ITEM	Data Name	CSV Tags in SCADA Software
		Tag ITEM (fixed)
000	Stop block operation command	MT_ST
003	Execution error display	ERR
008	Input	X1
010	Time unit	TU
012	Accumulated value	Q1
013	Accumulated value	Q2
014	Reset switch	S1
015	Interrupt switch	S2
021	Preset value	BM
022	Batch accumulated value	Q3
023	Batch controller reset switch	S3
024	Arrival at preset value	U1

Block Model	Block Name	Block Address
<151>	Run Time Accumulator	100 to 349

Outline

This function block accumulates the running time of machinery such as pumps, and outputs the accumulated running time as a number of pulses.

•The accumulated running time is expressed as number of pulses per unit time.
•Counting of time accumulated values is performed each pulse unit when S1 input is set to 1 (ON). Counting is not dependent on the operation cycle.

Note: •Set the operation cycle of ITEM004 to a value shorter than the pulse unit of ITEM007.
•Internally held accumulated values are cleared when a cold start is performed, and are held when a hot start is performed.

Block diagram

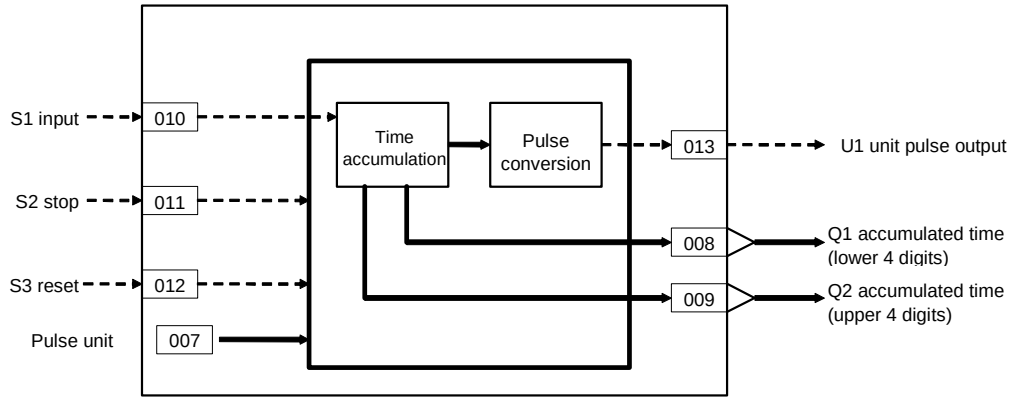

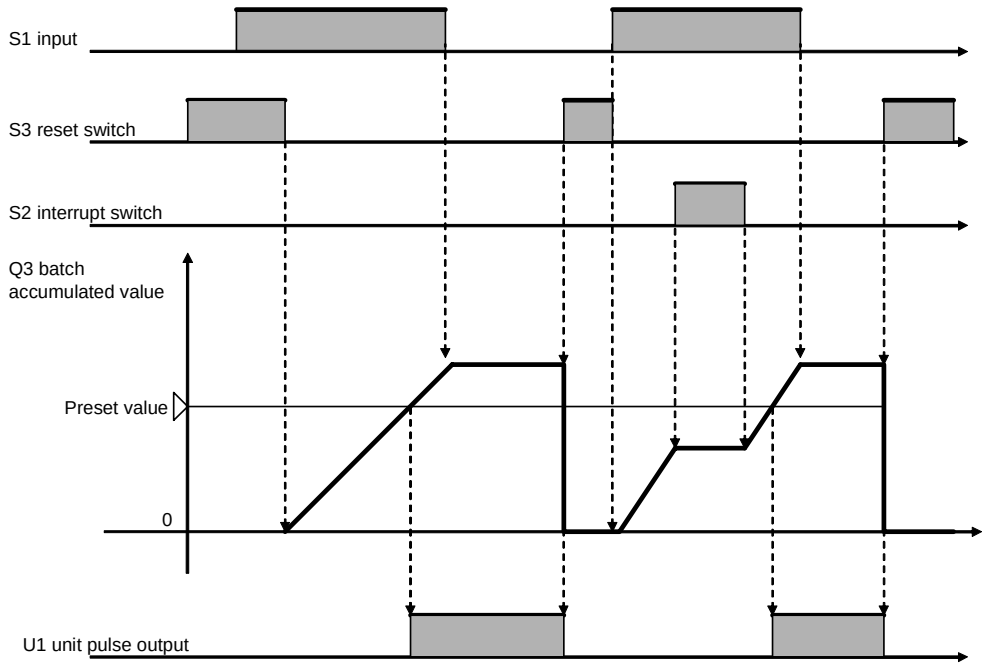

ITEM list

*1:On the CX-Process Monitor, the R/W mode is indicated in the Tuning screen or in the Control screen.

ITEM TYPE	ITEM	Symbol	Data Description	Data Range	Default	COLD start initialization	R/W Mode R: Read, W: Write, R/W: R/W-enabled, -: R/W-disabled Note: r and r/w: Read and read/write for validate action or monitor run status by CX-Process Tool or Monitor, (S): Initial setting data, (O): Operation data					Data Length (bytes)
							According to CX-Process Tool	According to CX-Process Monitor *1	According to ITEM Setting block	According to Step Ladder Program	Send/ Receive All Blocks	
Contact input	000		Stop block operation command (0: Cancel stop, 1: Stop)	0, 1	0		–	–	–	–	S/R	1
Parameter	001		Comment	23 characters	Block name		R/W(S)	–	–	–	–	24
	002		Block Model: Run time accumulator	151	151		R/W(S)	–	–	–	–	2
Special	003		Execution error display 0: Normal, Other: Error (See Appendix "Execution Error Code List.")		0000		r	–	–	–	S	2
Parameter	004		Operation cycle (sec) 0: Common, 1: 0.1, 2: 0.2, 3: 0.5, 4: 1, 5: 2	0 to 5	0		R/W(S)	–	–	–	–	2
	007		Pulse unit (0: s, 1: 10s, 2: min, 3: 10min, 4: h)	0 to 4	0		R/W(S)	–	–	–	S/R	1
Accumu-lated value output	008	Q1	Accumulated time (lower 4 digits)	0000 to 9999	0		r/w	–	–	–	S	2
	009	Q2	Accumulated time (upper 4 digits)	0000 to 9999	0		r/w	–	–	–	S	2
Contact input	010	S1	Input	0, 1	0		R/W(O)	–	–	R/W	S/R	1
	011	S2	Stop	0, 1	0		R/W(O)	–	–	R/W	S/R	1
	012	S3	Reset	0, 1	0		R/W(O)	–	–	R/W	S/R	1
Contact output	013	U1	Unit pulse output (1: ON during operation cycle)	0, 1	0		–	–	–	R	S	1

List of tag ITEMs on SCADA software

The following tag ITEMs are used to specify ITEMs with CSV tags from SCADA software when sending/receiving data to/from the CPU Unit using Receive All Blocks (model 461)/Send All Blocks (model 462). All tag ITEMs are fixed and cannot be changed.

ITEM	Data Name	CSV Tags in SCADA Software
		Tag ITEM (fixed)
000	Stop block operation command	MT_ST
003	Execution error display	ERR
007	Pulse unit	PT
008	Accumulated time (lower 4 digits)	Q1
009	Accumulated time (upper 4 digits)	Q2
010	Input	S1
011	Stop	S2
012	Reset	S3
013	Unit pulse output	U1

Block Model	Block Name	Block Address
<153>	Time Sequence Data Statistics	100 to 349

Outline

This function block records up to 400 time sequence values from analog signals and calculates statistics, such as the average and standard deviation.

Supported Statistical Calculations
Average value Y1 = X1(k)/N
Smallest value Smallest value of Y2 = X1(k)
Largest value Largest value of Y3 = X1(k)
Range Y5 (upper), Y4 (lower) = Y3 - Y2
Standard deviation Square root of (Y9 = Y8 (upper), Y7 (lower))
Average deviation Y6 = |Y1 - X1(k)| / N
Distribution Y8 (upper), Y7 (lower) = $\{Y1 - X1(k)\}^2$ / N

Note: X1(k) denotes the time sequence values input for statistical calculations.
k = A to A+N-1 (A: Number of first data in range, N: Number of samples)

The number of samples, N, is specified between 1 and 400 in ITEM 011. When N samples have been collected, the oldest sample is discarded each time a new sample is taken before making statistical calculations.
It is also possible to use previous data as the starting point for statistical calculations rather than the most recent data. The starting data number is specified in ITEM 010.

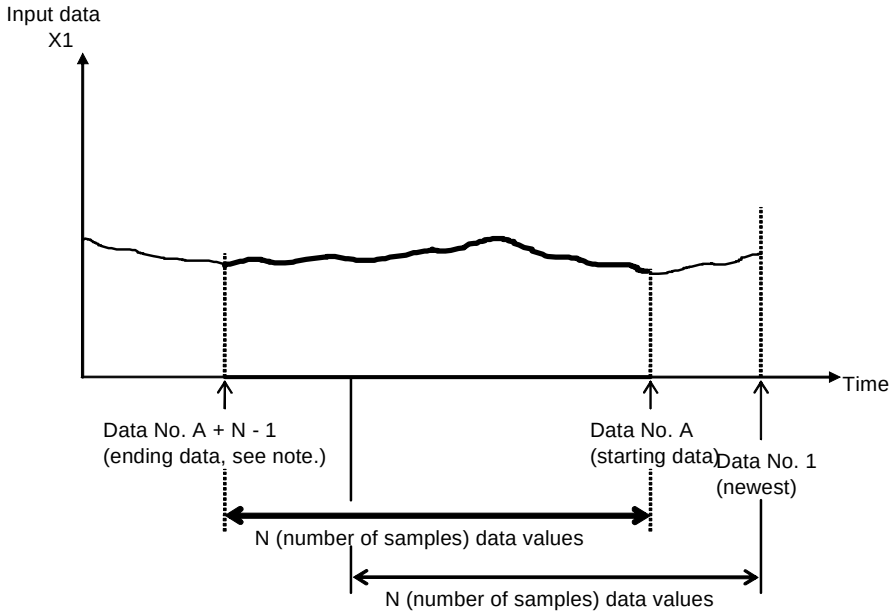

The function block internally stores data samples 1 to 400 as shown above.
When monitoring data samples using ITEM 041 to ITEM 240 or when inputting data number 1 to 400 directly into the buffers, the bank must be set. Switching between bank 0 and 1 can be executed using FINS commands or by using the Expanded AI Terminal from CPU Unit block to change ITEM 040. Calculations can also be performed on data in both banks, as shown below.

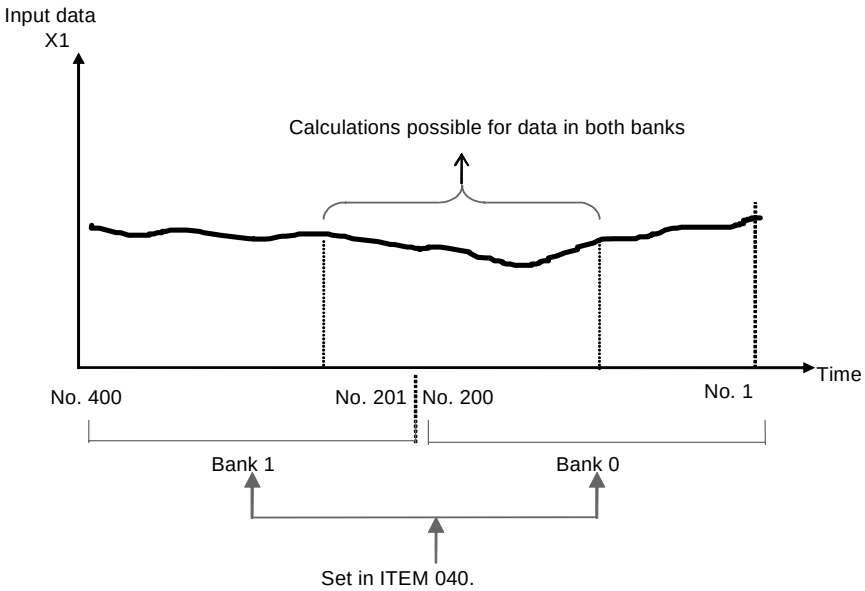

Note: A = Number of first data in range, N = Number of samples. A + N - 1 must be less than or equal to 400. If A + N -1 is greater than 400, a parameter error (execution error code 71) will occur.

Any of the following three methods can be used to sample data. The sampling method is set in ITEM 006.
Each cycle (1 to 9, 999 s) (set ITEM 006 to 0).
Sync on external sync contact (sample on OFF to ON transition) (set ITEM 006 to 1).
Direct buffer input using values set in ITEMs 041 to 204 as sampling data (set ITEM 006 to 2).

Function block applications

Analyzing inconsistency in a process value that should be constant, such as a temperature or flow rate.

Block diagram

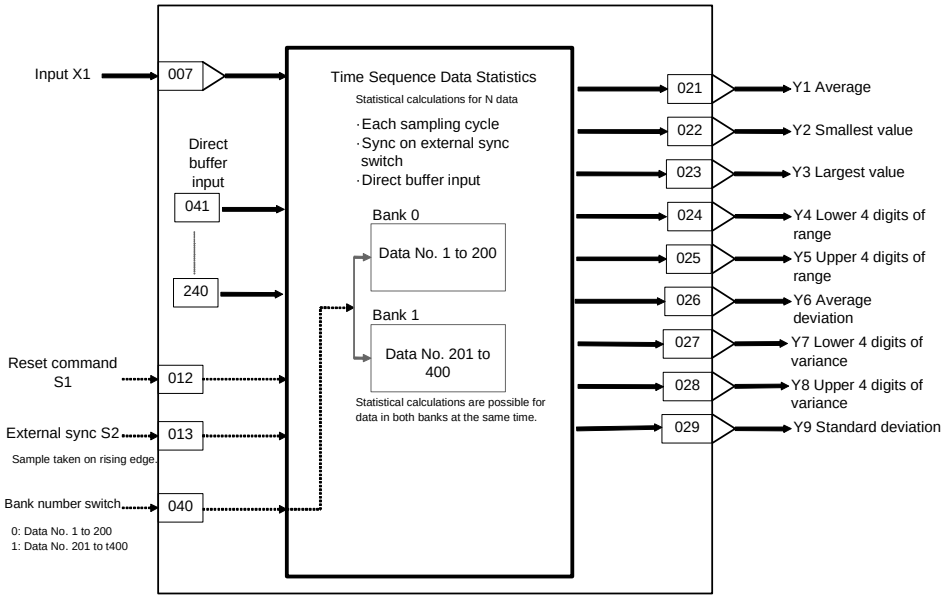

ITEM list

*1:On the CX-Process Monitor, the R/W mode is indicated in the Tuning screen or in the Control screen.

ITEM TYPE	ITEM	Symbol	Data Description	Data Range	Default	COLD start initialization	R/W Mode R: Read, W: Write, R/W: R/W-enabled, -: R/W-disabled Note: r and r/w: Read and read/write for validate action or monitor run status by CX-Process Tool or Monitor, (S): Initial setting data, (O): Operation data					Data Length (bytes)
							According to CX-Process Tool	According to CX-Process Monitor *1	According to ITEM Setting block	According to Step Ladder Program	Send/ Receive All Blocks	
Contact input	000		Stop block operation command 0: Cancel stop, 1: Stop	0, 1	0	–	–	–	–	–	S/R	1
Parameter	001		Comment	23 characters	Block name	–	R/W(S)	–	–	–	–	24
	002		Block Model: Time Sequence Data Statistics	153	153	–	R/W(S)	–	–	–	–	2
Special	003		Execution error display 0: Normal, Other: error (See Appendix “Execution Error Code List.”)		0000	–	r	–	–	–	S	2
Parameter	004		Operation cycle (seconds) 1: 01, 2: 0.2, 3: 0.5, 4: 1	1 to 4	4	–	R/W(S)	–	–	–	–	2
	006		Sampling method 0: Each sampling cycle 1: Sync on external sync switch (Sample when ITEM 013 goes from 0 to 1.) 2: Direct buffer input (Use values set in ITEMs 041 to 204 as sampling data.)	0 to 2	0	–	R/W(S)				–	1
Analog input connection information	007		X1 source designation (BBB: Block address, III: ITEM number)	BBB or III	000000	–	R/W(S)	–	–	–	–	4
Analog input	008	X1	Input	±320.00%	0.00	Yes	r	–	–	–	S	2
Parameter	009		Sampling cycle 0: Sampling on operation cycle 1 to 9999: Sample every 1 to 9, 999 s. Note: This setting is ignored if ITEM 006 (sampling method) is set to 1 (sync on external sync contact) or 2 (direct buffer input).	0 or 1 to 9999 s	0	–	R/W(S)	–			S/R	2
	010		First data number in range	1 to 400	1	–	R/W(S)	–	–	–	S/R	2
	011		Number of samples	1 to 400	100	–	R/W(S)	–	–	–	S/R	2
Contact input	012	S1	Reset command 1: Set all ITEMs from 041 to 240 to X1 value.	0, 1	0	Yes	R/W(O)	–	–	R/W	S/R	1
	013	S2	External sync switch 0 to 1: Take sample (Valid only when ITEM 006 is set to 1.)	0, 1	0	Yes	R/W(O)	–	–	R/W	S/R	1
Parameter	021	Y1	Average	±320.00%	0.00	Yes	r	–	–	–	S	2
	022	Y2	Smallest value	±320.00%	0.00	Yes	r	–	–	–	S	2

*1:On the CX-Process Monitor, the R/W mode is indicated in the Tuning screen or in the Control screen.

ITEM TYPE	ITEM	Symbol	Data Description	Data Range	Default	COLD start initialization	R/W Mode R: Read, W: Write, R/W: R/W-enabled, -: R/W-disabled Note: r and r/w: Read and read/write for validate action or monitor run status by CX-Process Tool or Monitor, (S): Initial setting data, (O): Operation data					Data Length (bytes)
							According to CX-Process Tool	According to CX-Process Monitor *1	According to ITEM Setting block	According to Step Ladder Program	Send/ Receive All Blocks	
	023	Y3	Largest value	±320.00%	0.00	Yes	r	–	–	–	S	2
	024	Y4	Lower 4 digits of range (= Largest value - smallest value)	0% to 99.99%	0.00	Yes	r	–	–	–	S	2
	025	Y5	Upper 4 digits of range (= Largest value - smallest value)	0% to 9999%	0	Yes	r	–	–	–	S	2
	026	Y6	Average deviation	0% to 320.00%	0.00	Yes	r	–	–	–	S	2
	027		Lower 4 digits of variance	0% to 99.99%	0.00	Yes	–	–	–	–	S	2
	028		Upper 4 digits of variance	0% to 9999%	0	Yes	–	–	–	–	S	2
	029	Y9	Standard deviation	0% to 320.00%	0.00	Yes	r	–	–	–	S	2
	040		Bank number 0: Data number 1 to 200 1: Data number 201 to 400	0, 1	0	Yes	R/W(O)	–	–	–	–	2
	041		Newest data Bank SW = 0: Number 1 Bank SW = 1: Number 201	±320.00%	0.00	Yes	–	–	R/W	–	–	2
	to		to			–						
	240		Oldest data Bank SW = 0: Number 200 Bank SW = 1: Number 400	±320.00%	0.00	–	–	–	R/W	–	–	2

Note: The contents of buffers for ITEMs 041 to 220 will not be initialized when the sampling method (ITEM 006) is changed from direct buffer input to a sampling cycle or external switch sync, and sampling will be started with the data currently in the buffers. To initialize the buffers, turn ON the reset command in ITEM 012.

List of tag ITEMs on SCADA software

The following tag ITEMs are used to specify ITEMs with CSV tags from SCADA software when sending/receiving data to/from the CPU Unit using Receive All Blocks (model 461)/Send All Blocks (model 462). All tag ITEMs are fixed and cannot be changed.

ITEM	Data Name	CSV Tags in SCADA Software
		Tag ITEM (Fixed)
000	Stop block operation command	MT_ST
003	Execution error display	ERR
008	Input	X1
009	Sampling cycle	H
010	First data number in range	A
011	Number of samples	N
012	Reset command	S1
013	External sync switch	S2
021	Average value	Y1
022	Smallest value	Y2
023	Largest value	Y3
024	Lower 4 digits of range	Y4
025	Upper 4 digits of range	Y5
026	Average deviation	Y6
027	Lower 4 digits of variance	Y7
028	Upper 4 digits of variance	Y8
029	Standard deviation	Y9

Block Model	Block Name	Block Address
<155>	Ramp Program	100 to 349

Outline

This function block is a ramp program setter for combining ramp and soak values.

Provided with a wait function

When X1 reference input has not arrived at A soak value±wait width value, measurement of the soak time is stopped regardless of Y1 output having moved to the soak process from the ramp process. At the same time, the value of Y1 output is held at A soak value. When X1 reference input is in Y1 output±wait width, program execution moves to the soak process, and measurement of the soak time is started. When X1 reference input does not fall within Y1 output±wait width even though the maximum wait time has elapsed, program execution moves to the soak process and measurement of the soak time is started.
When the state of S3 move to next step command changes from 0 (OFF) to 1 (ON) during a wait, the wait operation is canceled, program execution moves to the soak process, and measurement of the soak time is started.

- The wait width and maximum wait time can be set common to all steps in the ramp program.
- Provided with a function for matching the setting value to X1 reference input at the start of the ramp program
- Provided with process output ("Process output" here refers to state that makes a distinction between ramp and soak.)
- Provided with elapsed time output for the entire program
- The desired process can be moved to when data is set by ITEM Setting blocks to process output (ITEM011). (Setting by ITEM Setting blocks is valid only when S1 run/stop command is 1 (ON).)
  The ramp program can also be returned to a process smaller than the current process. (Note, however, that when the ramp program is started from the reference input, the ramp program cannot return to a point before the point where the ramp program is started by the reference input.)

When S1 run/stop command is 0 (OFF), Y1 output equals 0. When the setting of S1 run/stop command changes from 0 (OFF) to 1 (ON), the ramp program starts with the value of Y1 output at A0 default. (When X1 reference input is designated as the source, and there is a point where X1 reference input matches the rise ramp rate or soak value, the program starts from that point.) The ramp program outputs up to 15 steps, each step comprising a ramp and soak value, to Y1 output for the duration that the S1 run/stop command is 1 (ON).

Block diagram

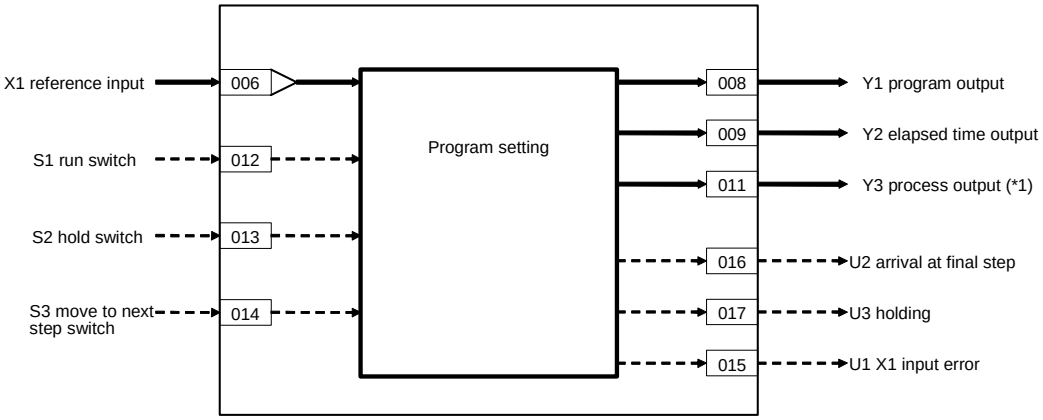

*1: Value of Y3 process output ("Process" here refers to state that makes a distinction between ramp and soak.)

Process	Y3
Stop	0
K1	1
T1	2
K2	3
T2	4
K3	5
T3	6
K4	7
T4	8

Process	Y3
K5	9
T5	10
K6	11
T6	12
K7	13
T7	14
K8	15
T8	16
to	to
K15	29
T15	30

When the ramp program is started from A0 default:

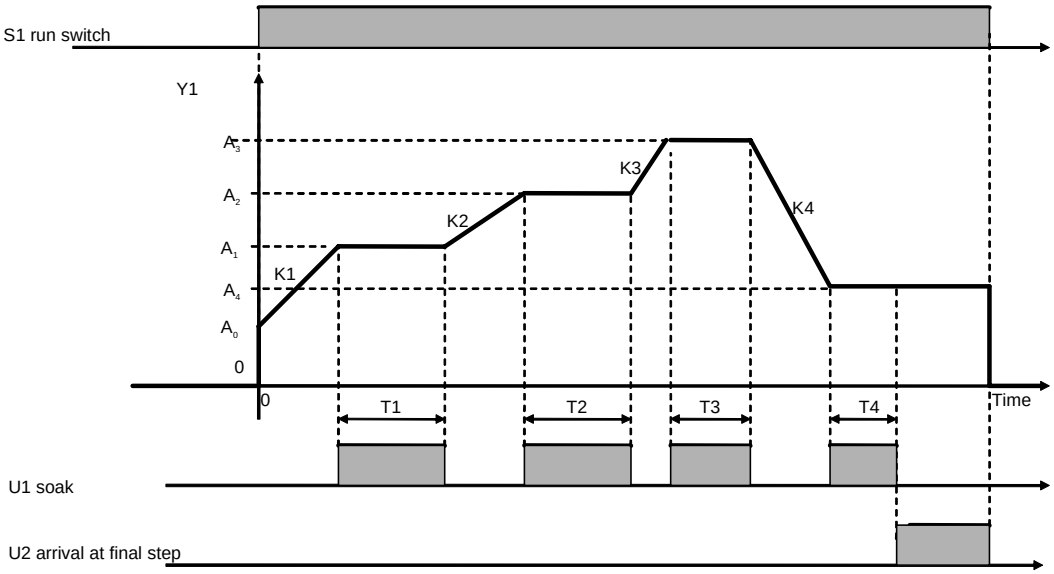

When the ramp program is started from X1 reference input:

The ramp program is started from a point where X1 reference input and rise ramp match.

Note: The condition for start of the ramp program from X1 reference input is as follows: X1 reference input must match the first rise ramp (before ramp falls) or soak value. However, a ramp that has risen after a fall is not accepted in this condition. In this case, Y1 output remains at 0 (OFF).

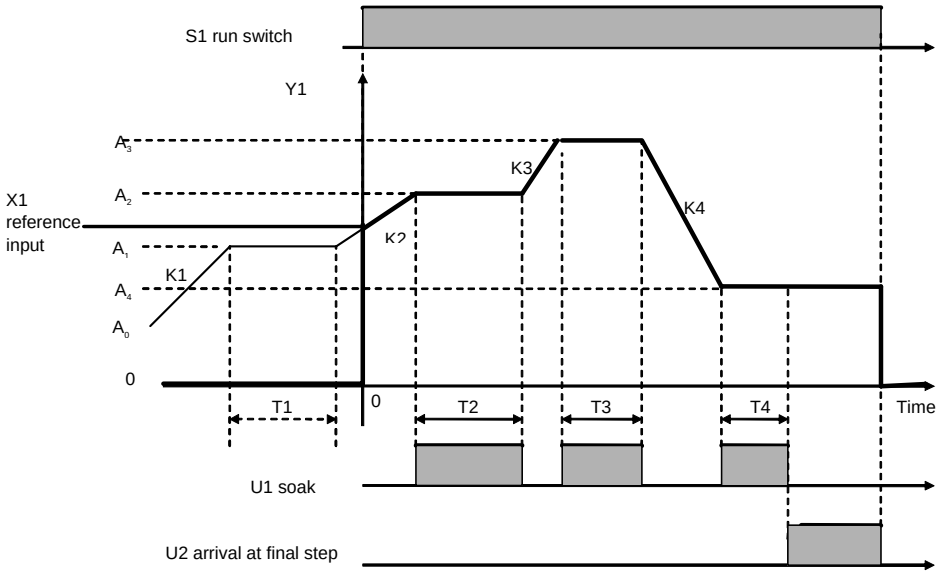

When wait operation is performed based on X1 reference input

When X1 reference input has not arrived at Y1 output±wait width value, program execution does not move to the soak process and measurement of the soak time is stopped regardless of Y1 output having moved to the soak process from the ramp process. When X1 reference input arrives at Y1 output±wait width value, program execution moves to the soak process and measurement of the soak width is started. To cancel a wait operation midway, change the state of S3 move to next step command from 0 (OFF) to 1 (ON).

Note 1:Setting the wait width to 0.00% disables the wait operation. So, the wait width is actually set within the range 0.01 to 320.00%.

Note 2:Even during a wait, Y2 elapsed time output continues and increases. Y2 stops only when S2 hold switch is 1 (ON).

Y1 output does not move to the soak process and time measurement stops until X1 reference input falls in Y1±wait width. After the wait, T2 soak time in step 2 is secured.

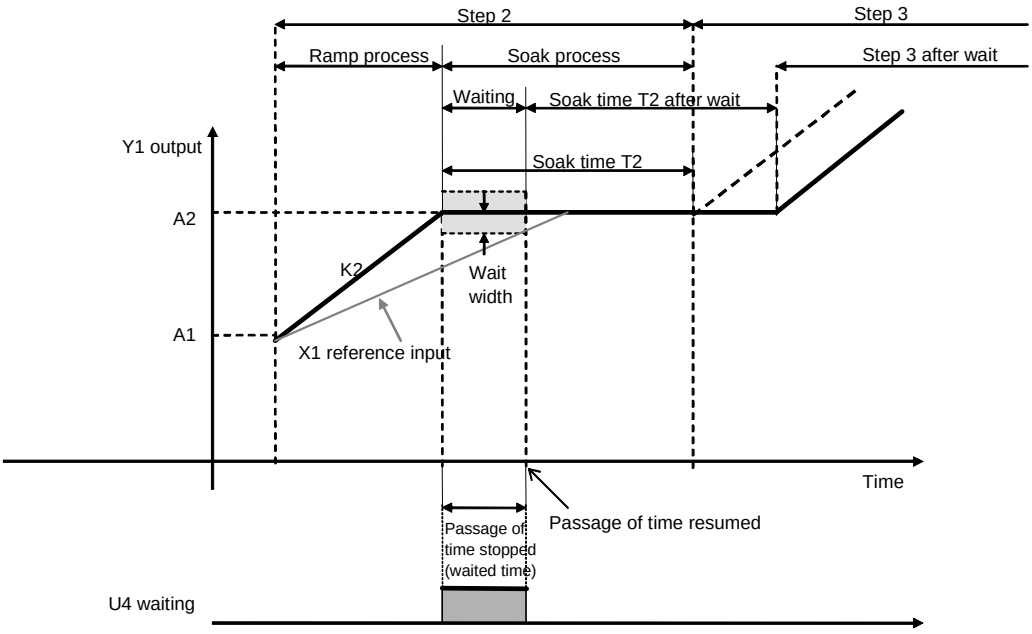

When X1 reference input does not fall within Y1±wait width even if the maximum wait time is exceeded

When X1 reference input does not fall within Y1±wait width even if the maximum wait time is exceeded, the wait operation is forcibly stopped, program execution moves to the soak process, and time measurement starts.

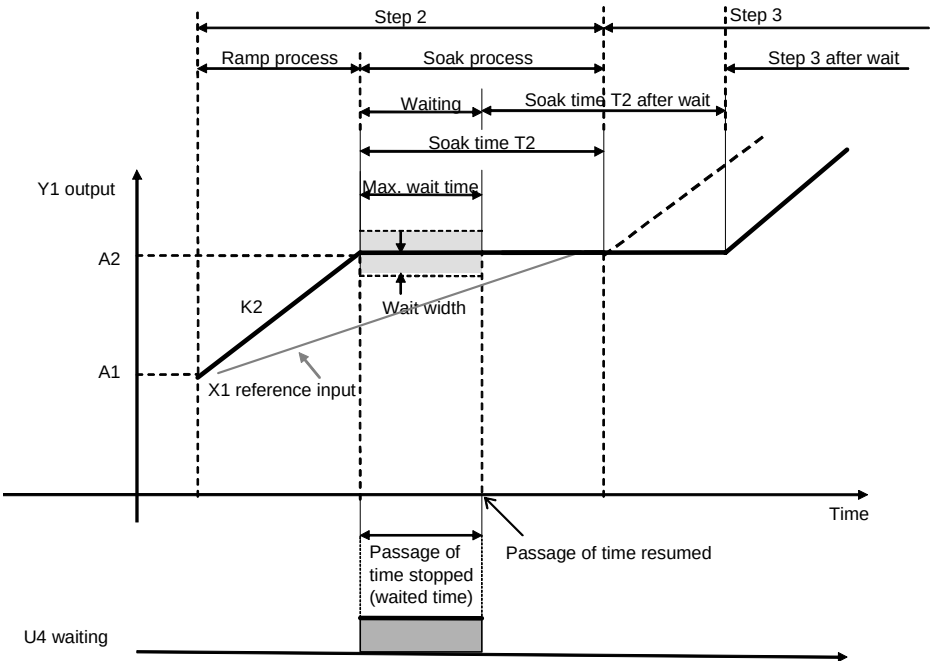

ITEM list

*1:On the CX-Process Monitor, the R/W mode is indicated in the Tuning screen or in the Control screen.

ITEM TYPE	ITEM	Symbol	Data Description	Data Range	Default	COLD start initialization	R/W Mode R: Read, W: Write, R/W: R/W-enabled, -: R/W-disabled Note: r and r/w: Read and read/write for validate action or monitor run status by CX-Process Tool or Monitor, (S): Initial setting data, (O): Operation data					Data Length (bytes)
							According to CX-Process Tool	According to CX-Process Monitor *1	According to ITEM Setting block	According to Step Ladder Program	Send/ Receive All Blocks	
Contact input	000		Stop block operation command (0: Cancel stop, 1: Stop)	0, 1	0	–	–	–	–	–	S/R	1
Parameter	001		Comment	23 characters	Block name	–	R/W(S)	–	–	–	–	24
	002		Block model: Ramp Program	155	155	–	R/W(S)	–	–	–	–	2
Special	003		Execution error display 0: Normal, Other: Error (See Appendix "Execution Error Code List.")		0000	–	r	–	–	–	S	2
Parameter	004		Operation cycle (sec) 1: 0.1, 2: 0.2, 3: 0.5, 4: 1	1 to 4	4	–	R/W(S)	–	–	–	–	2
Analog contact information	006		X1 source designation (BBB: Block address, III: ITEM No.) X1 equals Y1 at start when X1 is connected.	BBBIII	000000	–	R/W(S)	–	–	–	–	4
Analog input	007	X1	Reference input (input for external setting of start point)	±320.00%	0.00	Yes	r	–	–	–	S	2
Analog output	008	Y1	Program output	±320.00%	0.00	Yes	r/w	–	–	–	S	2
	009	Y2	Elapsed time output	0 to 3200.0	0.0	Yes	r/w	–	–	–	S	2
Parameter	010		Elapsed time unit (0: sec, 1: min, 2: hr)	0 to 2	0	–	R/W(S)	–	–	–	S/R	1
Analog output	011	Y3	Process output (Process distinguishes between ramp and soak.)	0 to 30	0	Yes	r/w	–	W	–	S/R	2
Contact input	012	S1	Run/stop command (0: Reset, 1: Run)	0, 1	0	Yes	R/W(O)	–	–	R/W	S/R	1
	013	S2	Hold switch (1: Hold)	0, 1	0	Yes	R/W(O)	–	–	R/W	S/R	1
	014	S3	Move to next step command (When the command state changes from 0 to 1, program execution jumps to the start of the ramp process of the next step. This command is automatically reset by the system after the jump ends.) Note: When the command state changes from 0 to 1 during a wait, wait is canceled, and program execution moves to the soak process.	0, 1	0	Yes	R/W(O)	–	–	R/W	S/R	1
Contact output	015	U1	X1 input error (1: Error. Output is 0 when reference input X1 does not match the ramp rate and soak value of the rise ramp.)	0, 1	0	Yes	–	–	–	R	S	1
	016	U2	Arrival at final step	0, 1	0	Yes	–	–	–	R	S	1
	017	U3	Holding	0, 1	0	Yes	–	–	–	R	S	1
	019 *2	U4	Waiting (0: Not waiting, 1: Waiting)	0, 1	0	Yes	–	–	–	R	S	1
Start step												
Parameter	020	A0	Default (Note, however, that reference input X1 is given priority and this value is invalid when the source designation of X1 is specified.)	±320.00%	0.00	–	R/W(O)	–	–	–	–	1
No.1 step												
Parameter	021	K1	Ramp rate	±115.00%/H1	1.00	–	R/W(O)	–	W	–	–	2
	022	H1	Time unit (0: sec [digits past decimal point ignored], 1: min, 2: hr)	0 to 2	0	–	R/W(O)	–	–	–	–	1
	023	A1	Soak value	±320.00%	100.00	–	R/W(O)	–	W	–	–	2
	024	T1	Soak time	0 to 3200.0	100.0	–	R/W(O)	–	W	–	–	2
	025	J1	Time unit (0: sec [digits past decimal point ignored], 1: min, 2: hr)	0 to 2	0	–	R/W(O)	–	–	–	–	1
No.2 step												
Parameter	026	K2	Ramp rate	±115.00%/H2	1.00	–	R/W(O)	–	W	–	–	2
	027	H2	Time unit (0: sec [digits past decimal point ignored], 1: min, 2: hr)	0 to 2	0	–	R/W(O)	–	–	–	–	1
	028	A2	Soak value	±320.00%	200.00	–	R/W(O)	–	W	–	–	2
	029	T2	Soak time	0 to 3200.0	100.0	–	R/W(O)	–	W	–	–	2
	030	J2	Time unit (0: sec [digits past decimal point ignored], 1: min, 2: hr)	0 to 2	0	–	R/W(O)	–	–	–	–	1

*1:On the CX-Process Monitor, the R/W mode is indicated in the Tuning screen or in the Control screen.

ITEM TYPE	ITEM	Symbol	Data Description	Data Range	Default	COLD start initialization	R/W Mode R: Read, W: Write, R/W: R/W-enabled, -: R/W-disabled Note: r and r/w: Read and read/write for validate action or monitor run status by CX-Process Tool or Monitor, (S): Initial setting data, (O): Operation data					Data Length (bytes)
							According to CX-Process Tool	According to CX-Process Monitor *1	According to ITEM Setting block	According to Step Ladder Program	Send/ Receive All Blocks	
No.3 step												
Parameter	031	K3	Ramp rate	±115.00%/H3	1.00	–	R/W(O)	–	W	–	–	2
	032	H3	Time unit (0: sec [digits past decimal point ignored], 1: min, 2: hr)	0 to 2	0	–	R/W(O)	–	–	–	–	1
	033	A3	Soak value	±320.00%	300.00	–	R/W(O)	–	W	–	–	2
	034	T3	Soak time	0 to 3200.0	100.0	–	R/W(O)	–	W	–	–	2
	035	J3	Time unit (0: sec [digits past decimal point ignored], 1: min, 2: hr)	0 to 2	0	–	R/W(O)	–	–	–	–	1
No.4 step												
Parameter	036	K4	Ramp rate	±115.00%/H4	-1.00	–	R/W(O)	–	W	–	–	2
	037	H4	Time unit (0: sec [digits past decimal point ignored], 1: min, 2: hr)	0 to 2	0	–	R/W(O)	–	–	–	–	1
	038	A4	Soak value	±320.00%	150.00	–	R/W(O)	–	W	–	–	2
	039	T4	Soak time	0 to 3200.0	100.0	–	R/W(O)	–	W	–	–	2
	040	J4	Time unit (0: sec [digits past decimal point ignored], 1: min, 2: hr)	0 to 2	0	–	R/W(O)	–	–	–	–	1
No.5 step												
Parameter	041	K5	Ramp rate	±115.00%/H5	-1.00	–	R/W(O)	–	W	–	–	2
	042	H5	Time unit (0: sec [digits past decimal point ignored], 1: min, 2: hr)	0 to 2	0	–	R/W(O)	–	–	–	–	1
	043	A5	Soak value	±320.00%	0.00	–	R/W(O)	–	W	–	–	2
	044	T5	Soak time	0 to 3200.0	10.0	–	R/W(O)	–	W	–	–	2
	045	J5	Time unit (0: sec [digits past decimal point ignored], 1: min, 2: hr)	0 to 2	0	–	R/W(O)	–	–	–	–	1
No.6 step												
Parameter	046	K6	Ramp rate	±115.00%/H6	-1.00	–	R/W(O)	–	W	–	–	2
	047	H6	Time unit (0: sec [digits past decimal point ignored], 1: min, 2: hr)	0 to 2	0	–	R/W(O)	–	–	–	–	1
	048	A6	Soak value	±320.00%	-150.00	–	R/W(O)	–	W	–	–	2
	049	T6	Soak time	0 to 3200.0	10.0	–	R/W(O)	–	W	–	–	2
	050	J6	Time unit (0: sec [digits past decimal point ignored], 1: min, 2: hr)	0 to 2	0	–	R/W(O)	–	–	–	–	1
No.7 step												
Parameter	051	K7	Ramp rate	±115.00%/H7	-1.00	–	R/W(O)	–	W	–	–	2
	052	H7	Time unit (0: sec [digits past decimal point ignored], 1: min, 2: hr)	0 to 2	0	–	R/W(O)	–	–	–	–	1
	053	A7	Soak value	±320.00%	-300.00	–	R/W(O)	–	W	–	–	2
	054	T7	Soak time	0 to 3200.0	10.0	–	R/W(O)	–	W	–	–	2
	055	J7	Time unit (0: sec [digits past decimal point ignored], 1: min, 2: hr)	0 to 2	0	–	R/W(O)	–	–	–	–	1
No.8 step												
Parameter	056*2	K8	Ramp rate	±115.00%/H8	0	–	R/W(O)	–	W	–	–	2
	057*2	H8	Time unit (0: sec [digits past decimal point ignored], 1: min, 2: hr)	0 to 2	0	–	R/W(O)	–	–	–	–	1
	058*2	A8	Soak value	±320.00%	-300.00	–	R/W(O)	–	W	–	–	2
	059*2	T8	Soak time	0 to 3200.0	0.0	–	R/W(O)	–	W	–	–	2
	060*2	J8	Time unit (0: sec [digits past decimal point ignored], 1: min, 2: hr)	0 to 2	0	–	R/W(O)	–	–	–	–	1
No.9 step												
Parameter	061*2	K9	Ramp rate	±115.00%/H9	0	–	R/W(O)	–	W	–	–	2
	062*2	H9	Time unit (0: sec [digits past decimal point ignored], 1: min, 2: hr)	0 to 2	0	–	R/W(O)	–	–	–	–	1
	063*2	A9	Soak value	±320.00%	-300.00	–	R/W(O)	–	W	–	–	2
	064*2	T9	Soak time	0 to 3200.0	0.0	–	R/W(O)	–	W	–	–	2
	065*2	J9	Time unit (0: sec [digits past decimal point ignored], 1: min, 2: hr)	0 to 2	0	–	R/W(O)	–	–	–	–	1

*1:On the CX-Process Monitor, the R/W mode is indicated in the Tuning screen or in the Control screen.

ITEM TYPE	ITEM	Symbol	Data Description	Data Range	Default	COLD start initialization	R/W Mode R: Read, W: Write, R/W: R/W-enabled, -: R/W-disabled Note: r and r/w: Read and read/write for validate action or monitor run status by CX-Process Tool or Monitor, (S): Initial setting data, (O): Operation data					Data Length (bytes)
							According to CX-Process Tool	According to CX-Process Monitor *1	According to ITEM Setting block	According to Step Ladder Program	Send/ Receive All Blocks	
No.10 step												
Parameter	066*2	K10	Ramp rate	±115.00%/H10	0	–	R/W(O)	–	W	–	–	2
	067*2	H10	Time unit (0: sec [digits past decimal point ignored], 1: min, 2: hr)	0 to 2	0	–	R/W(O)	–	–	–	–	1
	068*2	A10	Soak value	±320.00%	-300.00	–	R/W(O)	–	W	–	–	2
	069*2	T10	Soak time	0 to 3200.0	0.0	–	R/W(O)	–	W	–	–	2
	070*2	J10	Time unit (0: sec [digits past decimal point ignored], 1: min, 2: hr)	0 to 2	0	–	R/W(O)	–	–	–	–	1
No.11 step												
Parameter	071*2	K11	Ramp rate	±115.00%/H11	0	–	R/W(O)	–	W	–	–	2
	072*2	H11	Time unit (0: sec [digits past decimal point ignored], 1: min, 2: hr)	0 to 2	0	–	R/W(O)	–	–	–	–	1
	073*2	A11	Soak value	±320.00%	-300.00	–	R/W(O)	–	W	–	–	2
	074*2	T11	Soak time	0 to 3200.0	0.0	–	R/W(O)	–	W	–	–	2
	075*2	J11	Time unit (0: sec [digits past decimal point ignored], 1: min, 2: hr)	0 to 2	0	–	R/W(O)	–	–	–	–	1
No.12 step												
Parameter	076*2	K12	Ramp rate	±115.00%/H12	0	–	R/W(O)	–	W	–	–	2
	077*2	H12	Time unit (0: sec [digits past decimal point ignored], 1: min, 2: hr)	0 to 2	0	–	R/W(O)	–	–	–	–	1
	078*2	A12	Soak value	±320.00%	-300.00	–	R/W(O)	–	W	–	–	2
	079*2	T12	Soak time	0 to 3200.0	0.0	–	R/W(O)	–	W	–	–	2
	080*2	J12	Time unit (0: sec [digits past decimal point ignored], 1: min, 2: hr)	0 to 2	0	–	R/W(O)	–	–	–	–	1
No.13 step												
Parameter	081*2	K13	Ramp rate	±115.00%/H13	0	–	R/W(O)	–	W	–	–	2
	082*2	H13	Time unit (0: sec [digits past decimal point ignored], 1: min, 2: hr)	0 to 2	0	–	R/W(O)	–	–	–	–	1
	083*2	A13	Soak value	±320.00%	-300.00	–	R/W(O)	–	W	–	–	2
	084*2	T13	Soak time	0 to 3200.0	0.0	–	R/W(O)	–	W	–	–	2
	085*2	J13	Time unit (0: sec [digits past decimal point ignored], 1: min, 2: hr)	0 to 2	0	–	R/W(O)	–	–	–	–	1
No.14 step												
Parameter	086*2	K14	Ramp rate	±115.00%/H14	0	–	R/W(O)	–	W	–	–	2
	087*2	H14	Time unit (0: sec [digits past decimal point ignored], 1: min, 2: hr)	0 to 2	0	–	R/W(O)	–	–	–	–	1
	088*2	A14	Soak value	±320.00%	-300.00	–	R/W(O)	–	W	–	–	2
	089*2	T14	Soak time	0 to 3200.0	0.0	–	R/W(O)	–	W	–	–	2
	090*2	J14	Time unit (0: sec [digits past decimal point ignored], 1: min, 2: hr)	0 to 2	0	–	R/W(O)	–	–	–	–	1
No.15 step												
Parameter	091*2	K15	Ramp rate	±115.00%/H15	0	–	R/W(O)	–	W	–	–	2
	092*2	H15	Time unit (0: sec [digits past decimal point ignored], 1: min, 2: hr)	0 to 2	0	–	R/W(O)	–	–	–	–	1
	093*2	A15	Soak value	±320.00%	-300.00	–	R/W(O)	–	W	–	–	2
	094*2	T15	Soak time	0 to 3200.0	0.0	–	R/W(O)	–	W	–	–	2
	095*2	J15	Time unit (0: sec [digits past decimal point ignored], 1: min, 2: hr)	0 to 2	0	–	R/W(O)	–	–	–	–	1
Wait setting												
Parameter	096*2		Wait width (0: No wait operation)	0 to 320.00%	0.00	–	R/W(O)	–	W	–	S/R	2
	097*2		Max. wait time (0.0: Unlimited) Note: The time unit of this setting is the same as that of the ramp in each step.	0 to 3200.0	0.0	–	R/W(O)	–	W	–	S/R	2

*2: These ITEMs were added in Loop Control Unit Ver.1.50.

Note 1

- The S3 move to next step command is enabled only during the soak process, and is invalid during ramp processes.
  When the S3 move to next step command changes state from 0 to 1 during the soak process, program execution moves to the start of the ramp process of the next step.
  Even if the S3 move to next step command changes state from 0 to 1 during the ramp process, program execution does not move to the next step. Program execution moves to the next step when execution arrives at the final value of that ramp process.
- When "+" (plus number) data and not "-" (minus number) data is set to Kx (any ramp rate) regardless of a fall ramp (soak value lower than previous value), U2 arrival at final step becomes 1 (ON) at that step. The same also applies to rise ramps.
- To stop execution of the ramp program, set Kn final ramp rate to 0.00%/Hn.
- When a hot start is performed, the ramp program starts midway through the process immediately before the instantaneous power interruption occurred or immediately before the program was stopped according to the elapsed time.

Note 2: ITEMs ITEM020 to ITEM097 can be changed while the ramp program is running (for the duration that S1 run/stop command is 1). Any changes made are immediately reflected in program execution.
A0 initial value, K□ ramp rate for each step, H□ ramp time unit for each step, A□ soak value for each step, T□ soak time for each step, J□ soak time unit for each step, wait width common to all steps and maximum wait time common to all steps

Note 3: Do not change the following ITEMs while the ramp program is running (for the duration that S1 run/stop command is 1).
ITEM004 (operation cycle), ITEM010 (elapsed time unit)
Before you change the values of these ITEMs, temporarily set S1 run/stop command to 0 (OFF). After you have changed the values, set S1 run/stop command to 1 (ON) and restart the program.

List of tag ITEMs on SCADA software

The following tag ITEMs are used to specify ITEMs with CSV tags from SCADA software when sending/receiving data to/from the CPU Unit using Receive All Blocks (model 461)/Send All Blocks (model 462). All tag ITEMs are fixed and cannot be changed.

ITEM	Data Name	CSV Tags in SCADA Software
		Tag ITEM (fixed)
000	Stop block operation command	MT_ST
003	Execution error display	ERR
007	Reference input	X1
008	Program output	Y1
009	Elapsed time output	Y2
010	Elapsed time unit	H0
011	Process output	Y3
012	Run/stop command	S1
013	Hold switch	S2
014	Move to next step command	S3
015	X1 input error	U1
016	Arrival at final step	U2
017	Holding	U3
019	Waiting	U4
020	Default	A0
096	Wait width	WB
097	Max. wait time	WT

Block Model	Block Name	Block Address
<156>	Segment Program	100 to 349

Outline

This function block is the segment program setter for setting time and output as segments.

•Provided with a function for matching the setting value to X1 reference input at the start of the segment program
•Provided with step output
•Provided with time axis output for the entire program
•The desired step (segment point) or point on the time axis can be moved when data is set by ITEM Setting blocks to step output (ITEM011) or time axis output (ITEM009). (Setting by ITEM Setting blocks is valid only when S1 run/stop command is 1 (ON).) The segment program can also be returned to a step smaller than the current step. (Note, however, that when the segment program is started from the reference input, the segment program cannot return to a point before the point where the segment program is started by the reference input.)

When S1 run/stop command is 0 (OFF), Y1 output equals 0. When the setting of S1 run/stop command changes from 0 (OFF) to 1 (ON), the segment program starts with the value of Y1 output at B0 default. (When X1 reference input is designated as the source, and there is a point where X1 reference input matches the first segment point, the program starts from that point.)

Block diagram

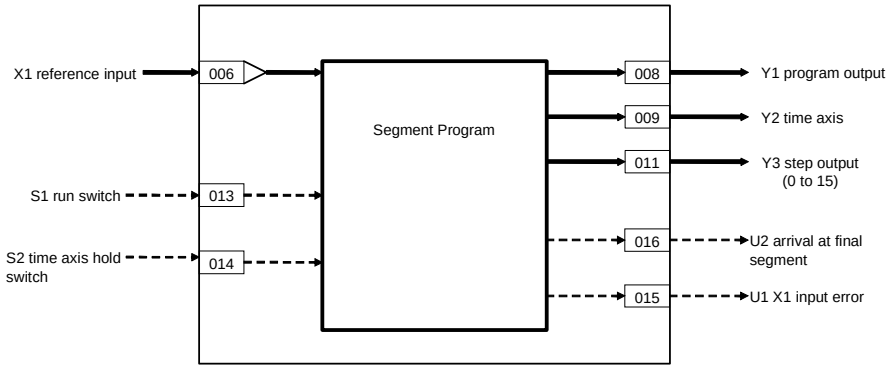

When the segment program is started from B0 default:

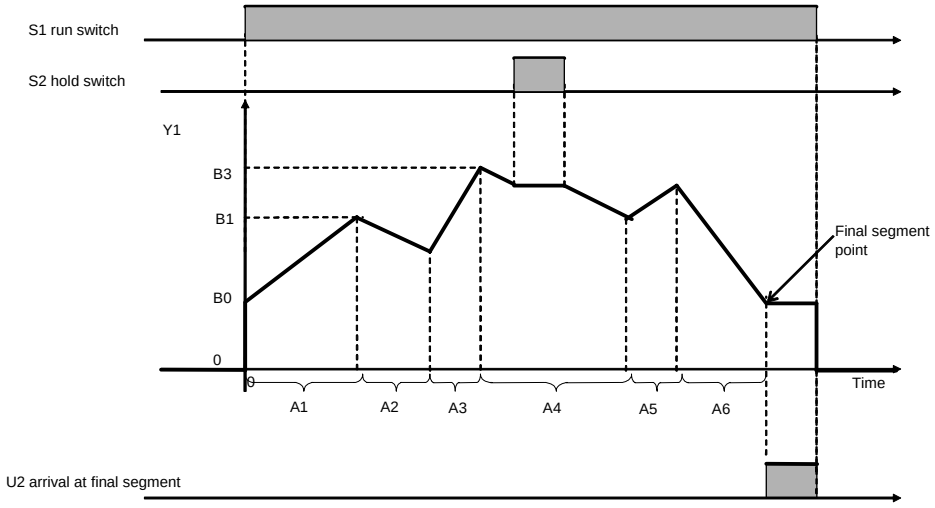

When the segment program is started from X1 reference input:

The segment program is started from a point where X1 reference input and the first segment (B0 to B1) match.

Note: The condition for start of the segment program from X1 reference input is as follows: X1 reference input must match the first segment (B0 to B1). However, a match with the second segment onwards is not accepted in this condition. In this case, Y1 output remains at 0 (OFF).

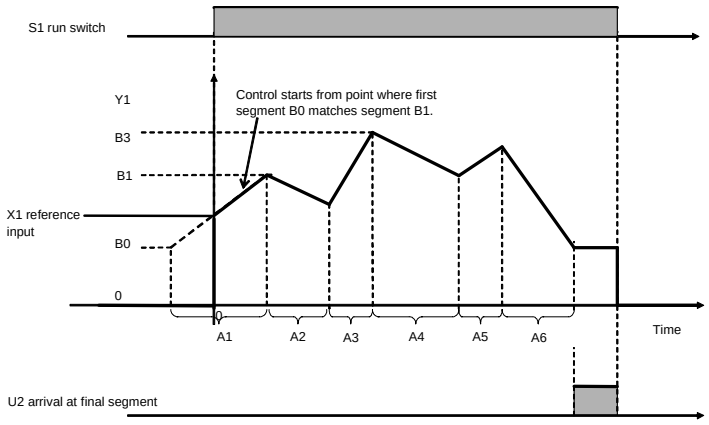

ITEM list

*1:On the CX-Process Monitor, the R/W mode is indicated in the Tuning screen or in the Control screen.

ITEM TYPE	ITEM	Symbol	Data Description	Data Range	Default	COLD start initialization	R/W Mode R: Read, W: Write, R/W: R/W-enabled, -: R/W-disabled Note: r and r/w: Read and read/write for validate action or monitor run status by CX-Process Tool or Monitor, (S): Initial setting data, (O): Operation data					Data Length (bytes)
							According to CX-Process Tool	According to CX-Process Monitor *1	According to ITEM Setting block	According to Step Ladder Program	Send/ Receive All Blocks	
Contact input	000		Stop block operation command (0: Cancel stop, 1: Stop)	0, 1	0	–	–	–	–	–	S/R	1
Parameter	001		Comment	23 characters	Block name	–	R/W(S)	–	–	–	–	24
	002		Block Model: Segment Program	156	156	–	R/W(S)	–	–	–	–	2
Special	003		Execution error display 0: Normal, Other: Error (See Appendix "Execution Error Code List.")		0000	–	r	–	–	–	S	2
Parameter	004		Operation cycle (sec) 1: 0.1, 2: 0.2, 3: 0.5, 4: 1	1 to 4	4	–	R/W(S)	–	–	–	–	2
Analog contact information	006		X1 source designation (BBB: Block address, III: ITEM No.) X1 equals Y1 at start when X1 is connected.	BBBIII	000000	–	R/W(S)	–	–	–	–	4
Analog input	007	X1	Reference input (input for external setting of start point)	±320.00%	0	Yes	r	–	–	–	S	2
Analog output	008	Y1	Program output	±320.00%	0	Yes	r/w	–	–	–	S	2
	009	Y2	Time axis output	0 to 3200.0	0.0	Yes	r/w	–	–	–	S/R	2
Analog output	011	Y3	Step output (0: Display only at end.)	0 to 15	0	Yes	r/w	–	W	–	S/R	2
Parameter	012	H1	Time axis unit (0: sec, 1: min, 2: hr)	0 to 2	0	–	R/W(S)	–	–	–	S/R	1
Contact input	013	S1	Run/stop command (0: Reset, 1: Run)	0, 1	0	Yes	R/W(O)	–	–	–	S/R	1
	014	S2	Hold switch (1: Stop)	0, 1	0	Yes	R/W(O)	–	–	–	S/R	1
Contact output	015	U1	X1 input (1: Error. Output is 0 when reference input X1 is not matching between No.1 segment B0 and B1.)	0, 1	0	Yes	–	–	–	R	S	1
	016	U2	Arrival at final segment (final arrival of entered segments)	0, 1	0	Yes	–	–	–	R	S	1
Parameter	022	B0	Default (Note, however, that reference input X1 is given priority and this value is invalid when the source designation of X1 is specified.)	±320.00%	-320.00	–	R/W(O)	–	W	–	–	2
	023	A1	A1 time	0 to 320.0	200.0	–	R/W(O)	–	W	–	–	2
	024	B1	B1 output	±320.00%	320.00	–	R/W(O)	–	W	–	–	2
	025	A2	A2 time	0 to 320.0	200.0	–	R/W(O)	–	W	–	–	2
	026	B2	B2 output	±320.00%	-320.00	–	R/W(O)	–	W	–	–	2
	027	A3	A3 time	0 to 320.0	200.0	–	R/W(O)	–	W	–	–	2
	028	B3	B3 output	±320.00%	320.00	–	R/W(O)	–	W	–	–	2
	029	A4	A4 time	0 to 320.0	200.0	–	R/W(O)	–	W	–	–	2
	030	B4	B4 output	±320.00%	-320.00	–	R/W(O)	–	W	–	–	2
	031	A5	A5 time	0 to 320.0	200.0	–	R/W(O)	–	W	–	–	2
	032	B5	B5 output	±320.00%	320.00	–	R/W(O)	–	W	–	–	2
	033	A6	A6 time	0 to 320.0	200.0	–	R/W(O)	–	W	–	–	2
	034	B6	B6 output	±320.00%	-320.00	–	R/W(O)	–	W	–	–	2
	035	A7	A7 time	0 to 320.0	200.0	–	R/W(O)	–	W	–	–	2
	036	B7	B7 output	±320.00%	320.00	–	R/W(O)	–	W	–	–	2
	037	A8	A8 time	0 to 320.0	200.0	–	R/W(O)	–	W	–	–	2
	038	B8	B8 output	±320.00%	-320.00	–	R/W(O)	–	W	–	–	2
	039	A9	A9 time	0 to 320.0	200.0	–	R/W(O)	–	W	–	–	2
	040	B9	B9 output	±320.00%	320.00	–	R/W(O)	–	W	–	–	2
	041	A10	A10 time	0 to 320.0	200.0	–	R/W(O)	–	W	–	–	2
	042	B10	B10 output	±320.00%	-320.00	–	R/W(O)	–	W	–	–	2
	043	A11	A11 time	0 to 320.0	200.0	–	R/W(O)	–	W	–	–	2
	044	B11	B11 output	±320.00%	320.00	–	R/W(O)	–	W	–	–	2
	045	A12	A12 time	0 to 320.0	200.0	–	R/W(O)	–	W	–	–	2
	046	B12	B12 output	±320.00%	-320.00	–	R/W(O)	–	W	–	–	2
	047	A13	A13 time	0 to 320.0	200.0	–	R/W(O)	–	W	–	–	2
Parameter	048	B13	B13 output	±320.00%	320.00	–	R/W(O)	–	W	–	–	2
	049	A14	A14 time	0 to 320.0	200.0	–	R/W(O)	–	W	–	–	2
	050	B14	B14 output	±320.00%	-320.00	–	R/W(O)	–	W	–	–	2
	051	A15	A15 time	0 to 320.0	200.0	–	R/W(O)	–	W	–	–	2
	052	B15	B15 output	±320.00%	320.00	–	R/W(O)	–	W	–	–	2

Note: •To stop execution of the segment program, set An final time to "0". (U2 arrival at final segment (ITEM016) turns ON.)
Execution ends when Y2 time axis output (ITEM009) reaches 3200.0.
•When a hot start is performed, the segment program starts midway through the segment immediately before the instantaneous power interruption occurred or immediately before the program was stopped according to the elapsed time.

Note Do not change the following ITEMs while the segment program is running (for the duration that S1 run/stop command is 1).
ITEM004 (operation cycle), ITEM012 (time axis unit), ITEM022 to ITEM052 (segment pattern setting values, and values of currently executing or previous steps in segment program)
Before you change the values of these ITEMs, temporarily set S1 run/stop command to 0 (OFF). After you have changed the values, set S1 run/stop command to 1 (ON) and restart the program.
Note that in the case of ITEM022 to ITEM055 (segment pattern setting values), the setting values of steps ahead of the currently executing step can be changed while the segment program is running (for the duration that S1 run/stop command is 1).

List of tag ITEMs on SCADA software

The following tag ITEMs are used to specify ITEMs with CSV tags from SCADA software when sending/receiving data to/from the CPU Unit using Receive All Blocks (model 461)/Send All Blocks (model 462). All tag ITEMs are fixed and cannot be changed.

ITEM	Data Name	CSV Tags in SCADA Software
		Tag ITEM (fixed)
000	Stop block operation command	MT_ST
003	Execution error display	ERR
007	Reference input	X1
008	Program output	Y1
009	Time axis output	H1
011	Step output	Y3
012	Time axis unit	H1
013	Run/stop command	S1
014	Hold switch	S2
015	X1 input	U1
016	Arrival at final segment	U2

Block Model	Block Name	Block Address
<157>	Segment Program 2	100 to 349

Outline

This function block is segment program setting with wait function for setting the output values with respect to time.

•Provided with a wait function
  •In the case of wait operation ON steps, program execution does not move to the next step and time measurement stops if X1 reference input has not arrived at Y1 output±wait width (of current step) value. At the same time, the value of Y1 output is held at the final value of the current step. When X1 reference input is in Y1 output±wait width, program execution moves to the next step, and time measurement and changing of the Y1 output segment are started. When X1 reference input is not in Y1 output±wait width even though the maximum wait time has elapsed, time measurement and changing of the Y1 output segment are started.
  •When the state of S4 move to next step command changes from 0 (OFF) to 1 (ON) during a wait, the wait operation is canceled, program execution moves to the next step, and time measurement is started.
  •When the state of S3 move to next wait changes from 0 (OFF) to 1 (ON) during execution of a certain step, program execution jumps to the final value of the current step. If the current steps is a wait operation ON step, program execution enters wait operation.
•The wait width and maximum wait time can be set common to all steps in the ramp program.
•The time width can be set to each step.
•The time unit (seconds, minutes, hours) can be specified to all steps in the ramp program.
•Provided with a function for matching the setting value to X1 reference input at the start of the segment program
•Provided with step output
•Provided with elapsed time output for the entire program
•The desired step can be moved to when data is set by ITEM Setting block to step output (ITEM011). (Setting by ITEM Setting blocks is valid only when S1 run/stop command is 1 (ON).)
The segment program can also be returned to a step smaller than the current step. (Note, however, that when the segment program is started from the reference input, the segment program cannot return to a point before the point where the segment program is started by the reference input.)
Even if reference input X1 is specified as the source, the program can be started from the default B0 instead of X1 by setting the reference input disable switch. (Supported from version 2.50 of the Loop Control Unit.)
The soak value can be changed even after completing a step. If the soak value is changed before the first step for reference input x1, however, it will be ignored. (Supported from version 2.50 of the Loop Control Unit.)

1)When the Run/stop command (S1) is 0 (OFF), output Y1 will be 0.
2)The following will take place then the Run/stop command (S1) is changed from 0 to 1 (OFF to ON).
  •If reference input X1 is not specified as the source, output Y1 will start from B0.
  •If reference input X1 is specified as the source but the reference input disable switch is 1 (ON), output Y1 will start from B0.
  •If reference input X1 is specified as the source, the reference input disable switch is 0 (OFF), and reference input X1 coincides with the rising step, output Y1 will start from reference input X1.

Block diagram

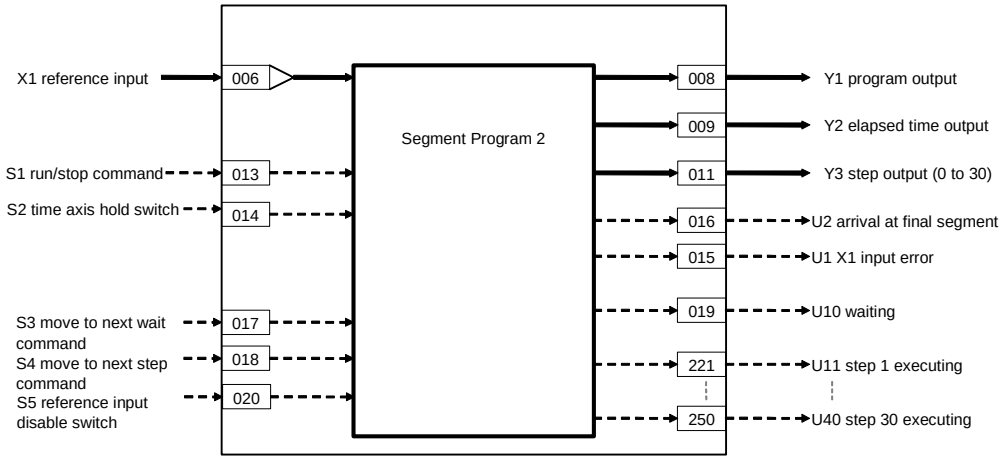

When the segment program is started from B0 default:

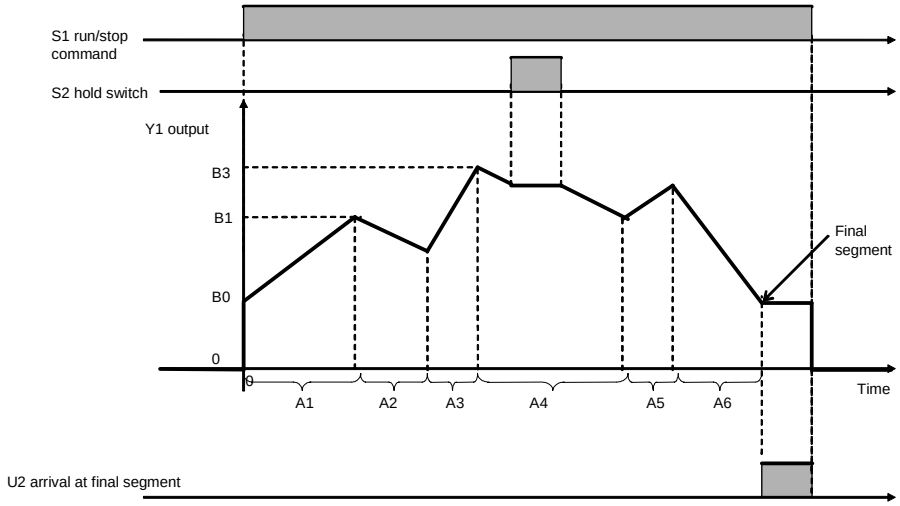

When the segment program is started from X1 reference input:

The segment program is started from a point where X1 reference input matches the start of the up ramp.

Note: The condition for start of the segment program from X1 reference input is as follows: X1 reference input must match the initial up ramp (before the down ramp). However, matches are not accepted from a down ramp, and from an up ramp after a momentary down ramp. In this case, Y1 output remains at 0 (OFF).

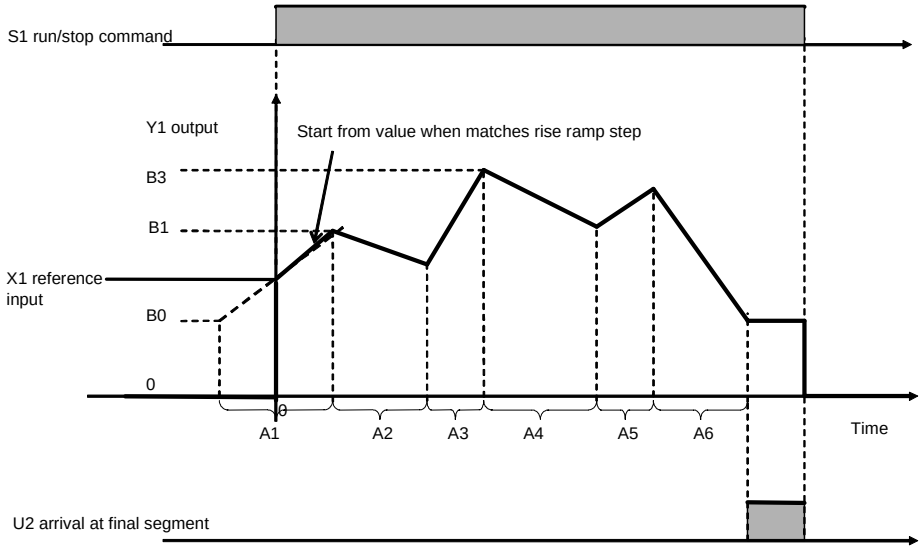

When a wait operation is performed based on X1 reference input

When X1 reference input has not arrived Y1 output±wait width (of current step) value at the final point of each step, program execution does not move to the next step, and Y1 output is held. Program execution moves to the next step when X1 reference input arrives at Y1 output±wait width (of current step) value.
To cancel a wait operation midway, change the state of S4 move to next step command from 0 (OFF) to 1 (ON).

Note1: The wait operation functions to hold output at the final value of the current step if wait operation is set to ON for that step. For this reason, to enable wait operation when moving from a ramp step to a soak step, wait operation is set not to the soak step but to the ramp step.
Note2: Setting the wait width to 0.00% disables the wait operation. So, the wait width is actually set within the range 0.01 to 320.00%.
Note3: Wait operation is canceled when the S4 move to next step command changes state from 0 (OFF) to 1 (ON).
Note4: Even during a wait, Y2 elapsed time output continues and increases. Y2 stops only when S2 hold switch is 1 (ON).

When program execution moves from the ramp step (wait operation ON) to the soak step

Y1 output does not move to step 3 and the program execution waits at the final value of step 2 until X1 reference input falls in Y1±wait width. After the wait, A3 set time of step 3 is secured.

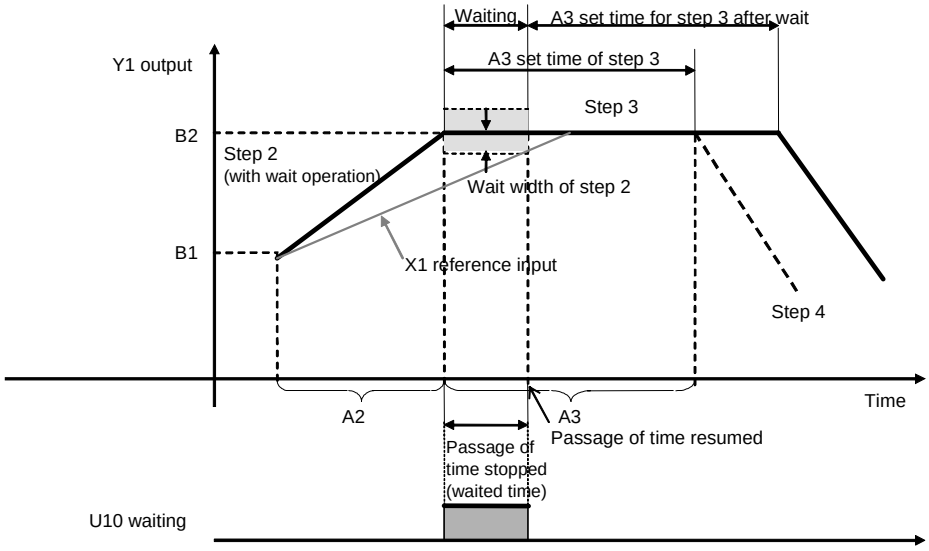

When program execution moves from the ramp step (wait operation ON) to another ramp step

Y1 output does not move to step 3 and program execution waits (value is held) at the final value of step 2 until X1 reference input X1 falls in Y1± wait width (of step 2). After the wait, the ramp of step 3 is started, and A3 set time is secured. Subsequent program operation shifts by the time that wait operation was performed.

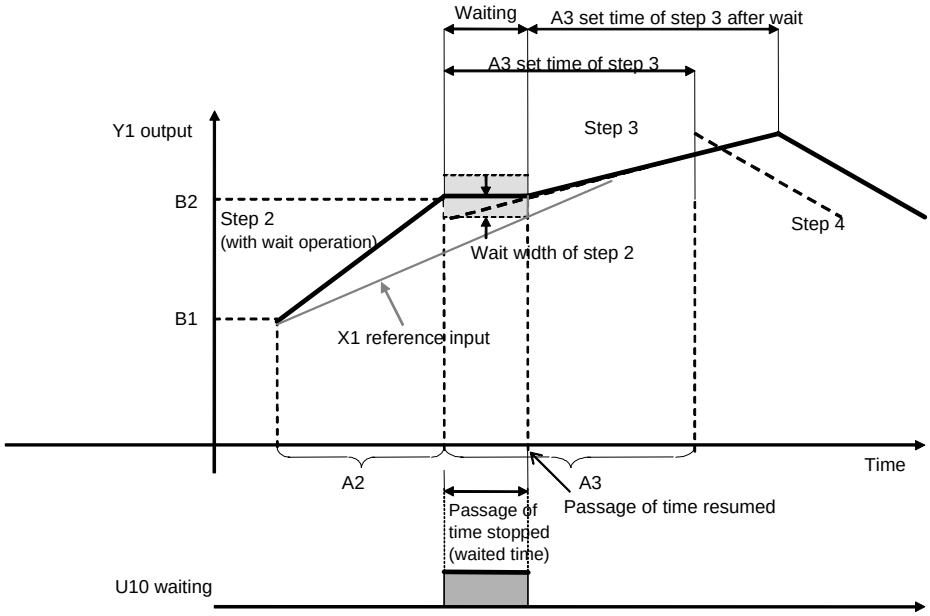

When program execution jumps to wait operation in the current step by S3 move to next wait command

To disable waiting for the set time of the step until wait operation is entered though the wait width must be entered, change the state of the S3 move to next wait command from 0 (OFF) to (ON). When the state of the S3 move to next wait command changes from 0 (OFF) to 1 (ON), program execution jumps to the final value of the current step. (This brings X1 reference input closer to the wait width more quickly.) Wait operation is started from the current step if wait operation is set to ON for that step.

Note: The S3 move to next wait command functions to cause program execution to jump to the final value of the current step. For this reason, if wait operation is set to OFF for the current step, program execution moves to the next step as it is.

If S3 move to next wait command turns 0 (OFF) during execution of step 2, the program jumps to B2 the final value of that step.

(1) If wait operation is set to ON at step 2, B2 remains at it is, and program execution waits for X1 reference input to approach. When X1 reference input is in Y1±wait width, program execution moves to step 3.

(2) If wait operation is set to OFF at step 2, program execution moves to step 3 as it is.

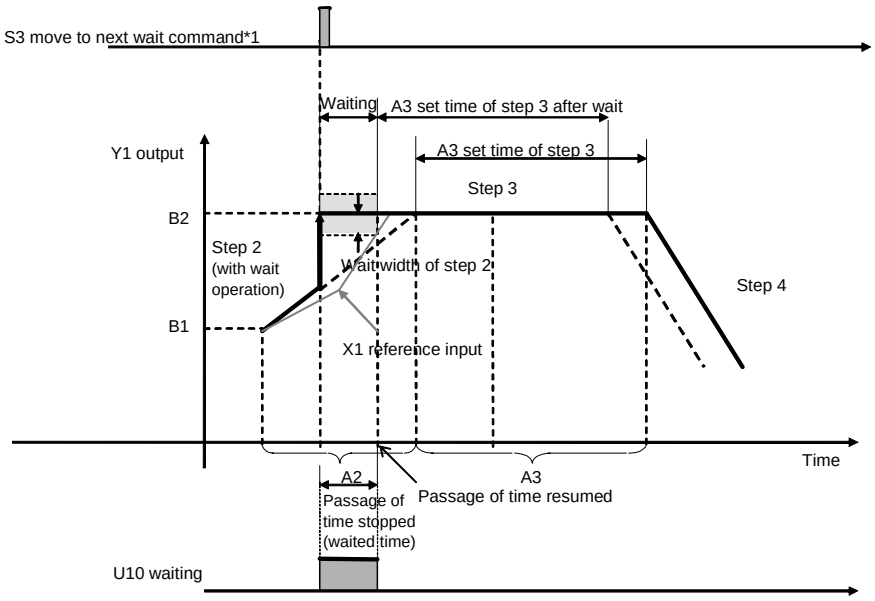

*1: When S3 move to next wait command changes to 1 (ON), program execution jumps to the final value of the current step, and the system automatically turns S3 to 0 (OFF) immediately after the jump.

When X1 reference input is not in Y1 output±wait width even though the maximum wait time has elapsed

When X1 reference input is not in Y1 output±wait width even though the maximum wait time has elapsed, the wait operation is forcibly quit, program execution moves to the next step, and time measurement is started.

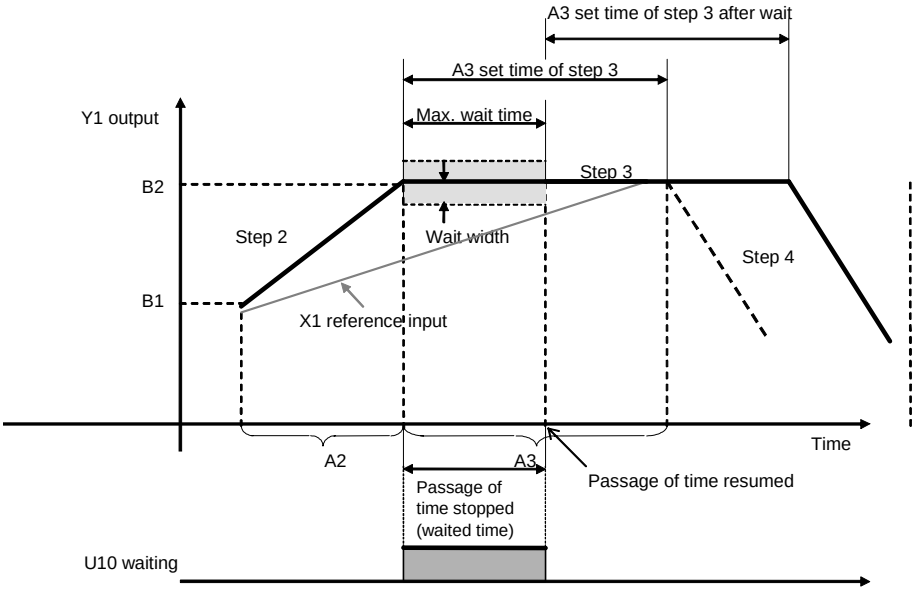

ITEM list

*1:On the CX-Process Monitor, the R/W mode is indicated in the Tuning screen or in the Control screen.

ITEM TYPE	ITEM	Symbol	Data Description	Data Range	Default	COLD start initialization	R/W Mode R: Read, W: Write, R/W: R/W-enabled, -: R/W-disabled Note: r and r/w: Read and read/write for validate action or monitor run status by CX-Process Tool or Monitor, (S): Initial setting data, (O): Operation data					Data Length (bytes)
							According to CX-Process Tool	According to CX-Process Monitor *1	According to ITEM Setting block	According to Step Ladder Program	Send/ Receive All Blocks	
Contact input	000		Stop block operation command (0: Cancel stop, 1: Stop)	0, 1	0		–	–	–	–	S/R	1
Parameter	001		Comment	23 characters	Block name		R/W(S)	–	–	–	–	24
	002		Block Model: Segment Program 2	157	157		R/W(S)	–	–	–	–	2
Special	003		Execution error display 0: Normal, Other: Error (See Appendix "Execution Error Code List.")		0000		r	–	–	–	S	2
Parame-ter	004		Operation cycle (sec) 1: 0.1, 2: 0.2, 3: 0.5, 4: 1	1 to 4	4		R/W(S)	–	–	–	–	2
Analog contact informa-tion	006		X1 source designation (BBB: Block address, III: ITEM No.) X1 equals Y1 at start when X1 is connected.	BBBIII	000000		R/W(S)	–	–	–	–	4
Analog input	007	X1	Reference input (input for external setting of start point)	±320.00%	0		r	–	–	–	S	2
Analog output	008	Y1	Program output	±320.00%	0		r/w	–	–	–	S	2
	009	Y2	Elapsed time output	0 to 3200.0	0.0		r/w	–	–	–	S	2
Analog output	011	Y3	Step output (0: Display only at end.)	0 to 30	0		r/w	–	W	–	S/R	2
Parameter	012	H1	Elapsed time unit (0: sec, 1: min, 2: hr)	0 to 2	0		R/W(S)	–	–	–	S/R	1
Contact input	013	S1	Run/stop command (0: Reset, 1: Run)	0, 1	0		R/W(O)	–	–	R/W	S/R	1
	014	S2	Hold switch (1: Stop)	0, 1	0		R/W(O)	–	–	R/W	S/R	1
Contact output	015	U1	X1 input error (1: Error. Output is 0 when X1 reference input does not match the first up ramp.)	0, 1	0		–	–	–	R	S	1
	016	U2	Arrival at final segment (final arrival of entered segments)	0, 1	0		–	–	–	R	S	1
Contact input	017	S3	Move to next wait command (When the command state changes from 0 to 1, program execution jumps to the final output value of the current step. This command is automatically reset by the system after the jump ends. After this jump, program execution enters the wait operation when wait operation is set to ON for the current step.) Note: This command is invalid during a wait operation. (Note, however, that this command is accepted after a wait ends if it is left set to 1.)	0, 1	0		R/W(O)	–	–	R/W	S/R	1
	018	S4	Move to next step command (When the command state changes from 0 to 1, program execution jumps to the start of the next step. This command is automatically reset by the system after the jump ends.) Note: When the command state changes from 0 to 1 during a wait, wait is canceled, and program execution moves to the next step.	0, 1	0		R/W(O)	–	–	R/W	S/R	1
Contact input	019	U10	Waiting (0: Not waiting, 1: Waiting)	0, 1	0		–	–	–	R	S	1
	020*1	S5	Reference input disable switch (0: Enabled, 1: Disabled)	0, 1	0		R/W (O)	–	–	R/W	S/R	1
Parameter	022	B0	Default (Note, however, that reference input X1 is given priority and this value is invalid when the source designation of X1 is specified.)	±320.00%	0.00		R/W(O)	–	W	–	–	2
	023	A1	Step 1 A1 time width, 0.0: End	0 to 3200.0	200.0		R/W(O)	–	W	–	–	2
	024	B1	Step 1 B1 output value	±320.00%	10.00		R/W(O)	–	W	–	–	2
	025	J1	Step 1 Time unit (0: sec [digits past decimal point ignored], 1: min, 2: hr)	0 to 2	0		R/W(O)	–	W	–	–	1
	026	A2	Step 2 A2 time width, 0.0: End	0 to 3200.0	200.0		R/W(O)	–	W	–	–	2

*1:On the CX-Process Monitor, the R/W mode is indicated in the Tuning screen or in the Control screen.

ITEM TYPE	ITEM	Symbol	Data Description	Data Range	Default	COLD start initialization	R/W Mode R: Read, W: Write, R/W: R/W-enabled, -: R/W-disabled Note: r and r/w: Read and read/write for validate action or monitor run status by CX-Process Tool or Monitor, (S): Initial setting data, (O): Operation data					Data Length (bytes)
							According to CX-Process Tool	According to CX-Process Monitor *1	According to ITEM Setting block	According to Step Ladder Program	Send/ Receive All Blocks	
	027	B2	Step 2 B2 output value	±320.00%	20.00		R/W(O)	–	W	–	–	2
	028	J2	Step 2 Time unit (0: sec [digits past decimal point ignored], 1: min, 2: hr)	0 to 2	0		R/W(O)	–	W	–	–	1
	029	A3	Step 3 A3 time width, 0.0: End	0 to 3200.0	200.0		R/W(O)	–	W	–	–	2
	030	B3	Step 3 B3 output value	±320.00%	30.00		R/W(O)	–	W	–	–	2
	031	J3	Step 3 Time unit (0: sec [digits past decimal point ignored], 1: min, 2: hr)	0 to 2	0		R/W(O)	–	W	–	–	1
	032	A4	Step 4 A4 time width, 0.0: End	0 to 3200.0	200.0		R/W(O)	–	W	–	–	2
	033	B4	Step 4 B4 output value	±320.00%	40.00		R/W(O)	–	W	–	–	2
	034	J4	Step 4 Time unit (0: sec [digits past decimal point ignored], 1: min, 2: hr)	0 to 2	0		R/W(O)	–	W	–	–	1
	035	A5	Step 5 A5 time width, 0.0: End	0 to 3200.0	200.0		R/W(O)	–	W	–	–	2
	036	B5	Step 5 B5 output value	±320.00%	50.00		R/W(O)	–	W	–	–	2
	037	J5	Step 5 Time unit (0: sec [digits past decimal point ignored], 1: min, 2: hr)	0 to 2	0		R/W(O)	–	W	–	–	1
	038	A6	Step 6 A6 time width, 0.0: End	0 to 3200.0	200.0		R/W(O)	–	W	–	–	2
	039	B6	Step 6 B6 output value	±320.00%	60.00		R/W(O)	–	W	–	–	2
	040	J6	Step 6 Time unit (0: sec [digits past decimal point ignored], 1: min, 2: hr)	0 to 2	0		R/W(O)	–	W	–	–	1
	041	A7	Step 7 A7 time width, 0.0: End	0 to 3200.0	200.0		R/W(O)	–	W	–	–	2
	042	B7	Step 7 B7 output value	±320.00%	70.00		R/W(O)	–	W	–	–	2
	043	J7	Step 7 Time unit (0: sec [digits past decimal point ignored], 1: min, 2: hr)	0 to 2	0		R/W(O)	–	W	–	–	1
	044	A8	Step 8 A8 time width, 0.0: End	0 to 3200.0	200.0		R/W(O)	–	W	–	–	2
	045	B8	Step 8 B8 output value	±320.00%	80.00		R/W(O)	–	W	–	–	2
	046	J8	Step 8 Time unit (0: sec [digits past decimal point ignored], 1: min, 2: hr)	0 to 2	0		R/W(O)	–	W	–	–	1
	047	A9	Step 9 A9 time width, 0.0: End	0 to 3200.0	200.0		R/W(O)	–	W	–	–	2
	048	B9	Step 9 B9 output value	±320.00%	90.00		R/W(O)	–	W	–	–	2
	049	J9	Step 9 Time unit (0: sec [digits past decimal point ignored], 1: min, 2: hr)	0 to 2	0		R/W(O)	–	W	–	–	1
	050	A10	Step 10 A10 time width, 0.0: End	0 to 3200.0	200.0		R/W(O)	–	W	–	–	2
	051	B10	Step 10 B10 output value	±320.00%	100.00		R/W(O)	–	W	–	–	2
	052	J10	Step 10 Time unit (0: sec [digits past decimal point ignored], 1: min, 2: hr)	0 to 2	0		R/W(O)	–	W	–	–	1
	053	A11	Step 11 A11 time width, 0.0: End	0 to 3200.0	200.0		R/W(O)	–	W	–	–	2
	054	B11	Step 11 B11 output value	±320.00%	90.00		R/W(O)	–	W	–	–	2
	055	J11	Step 11 Time unit (0: sec [digits past decimal point ignored], 1: min, 2: hr)	0 to 2	0		R/W(O)	–	W	–	–	1
	056	A12	Step 12 A12 time width, 0.0: End	0 to 3200.0	200.0		R/W(O)	–	W	–	–	2
	057	B12	Step 12 B12 output value	±320.00%	80.00		R/W(O)	–	W	–	–	2
	058	J12	Step 12 Time unit (0: sec [digits past decimal point ignored], 1: min, 2: hr)	0 to 2	0		R/W(O)	–	W	–	–	1
	059	A13	Step 13 A13 time width, 0.0: End	0 to 3200.0	200.0		R/W(O)	–	W	–	–	2
	060	B13	Step 13 B13 output value	±320.00%	70.00		R/W(O)	–	W	–	–	2
	061	J13	Step 13 Time unit (0: sec [digits past decimal point ignored], 1: min, 2: hr)	0 to 2	0		R/W(O)	–	W	–	–	1
	062	A14	Step 14 A14 time width, 0.0: End	0 to 3200.0	200.0		R/W(O)	–	W	–	–	2
	063	B14	Step 14 B14 output value	±320.00%	60.00		R/W(O)	–	W	–	–	2
	064	J14	Step 14 Time unit (0: sec [digits past decimal point ignored], 1: min, 2: hr)	0 to 2	0		R/W(O)	–	W	–	–	1
	065	A15	Step 15 A15 time width, 0.0: End	0 to 3200.0	200.0		R/W(O)	–	W	–	–	2
	066	B15	Step 15 B15 output value	±320.00%	50.00		R/W(O)	–	W	–	–	2
	067	J15	Step 15 Time unit (0: sec [digits past decimal point ignored], 1: min, 2: hr)	0 to 2	0		R/W(O)	–	W	–	–	1
	068	A16	Step 16 A16 time width, 0.0: End	0 to 3200.0	200.0		R/W(O)	–	W	–	–	2
	069	B16	Step 16 B16 output value	±320.00%	40.00		R/W(O)	–	W	–	–	2
	070	J16	Step 16 Time unit (0: sec [digits past decimal point ignored], 1: min, 2: hr)	0 to 2	0		R/W(O)	–	W	–	–	1
	071	A17	Step 17 A17 time width, 0.0: End	0 to 3200.0	200.0		R/W(O)	–	W	–	–	2
	072	B17	Step 17 B17 output value	±320.00%	30.00		R/W(O)	–	W	–	–	2
	073	J17	Step 17 Time unit (0: sec [digits past decimal point ignored], 1: min, 2: hr)	0 to 2	0		R/W(O)	–	W	–	–	1
	074	A18	Step 18 A18 time width, 0.0: End	0 to 3200.0	200.0		R/W(O)	–	W	–	–	2
	075	B18	Step 18 B18 output value	±320.00%	20.00		R/W(O)	–	W	–	–	2
	076	J18	Step 18 Time unit (0: sec [digits past decimal point ignored], 1: min, 2: hr)	0 to 2	0		R/W(O)	–	W	–	–	1
	077	A19	Step 19 A19 time width, 0.0: End	0 to 3200.0	200.0		R/W(O)	–	W	–	–	2
	078	B19	Step 19 B19 output value	±320.00%	10.00		R/W(O)	–	W	–	–	2

*1:On the CX-Process Monitor, the R/W mode is indicated in the Tuning screen or in the Control screen.

ITEM TYPE	ITEM	Symbol	Data Description	Data Range	Default	COLD start initialization	R/W Mode R: Read, W: Write, R/W: R/W-enabled, -: R/W-disabled Note: r and r/w: Read and read/write for validate action or monitor run status by CX-Process Tool or Monitor, (S): Initial setting data, (O): Operation data					Data Length (bytes)
							According to CX-Process Tool	According to CX-Process Monitor *1	According to ITEM Setting block	According to Step Ladder Program	Send/ Receive All Blocks	
	079	J19	Step 19 Time unit (0: sec [digits past decimal point ignored], 1: min, 2: hr)	0 to 2	0		R/W(O)	–	W	–	–	1
	080	A20	Step 20 A20 time width, 0.0: End	0 to 3200.0	200.0		R/W(O)	–	W	–	–	2
	081	B20	Step 20 B20 output value	±320.00%	0.00		R/W(O)	–	W	–	–	2
	082	J20	Step 20 Time unit (0: sec [digits past decimal point ignored], 1: min, 2: hr)	0 to 2	0		R/W(O)	–	W	–	–	1
	083	A21	Step 21 A21 time width, 0.0: End	0 to 3200.0	200.0		R/W(O)	–	W	–	–	2
	084	B21	Step 21 B21 output value	±320.00%	10.00		R/W(O)	–	W	–	–	2
	085	J21	Step 21 Time unit (0: sec [digits past decimal point ignored], 1: min, 2: hr)	0 to 2	0		R/W(O)	–	W	–	–	1
	086	A22	Step 22 A22 time width, 0.0: End	0 to 3200.0	200.0		R/W(O)	–	W	–	–	2
	087	B22	Step 22 B22 output value	±320.00%	20.00		R/W(O)	–	W	–	–	2
	088	J22	Step 22 Time unit (0: sec [digits past decimal point ignored], 1: min, 2: hr)	0 to 2	0		R/W(O)	–	W	–	–	1
	089	A23	Step 23 A23 time width, 0.0: End	0 to 3200.0	200.0		R/W(O)	–	W	–	–	2
	090	B23	Step 23 B23 output value	±320.00%	30.00		R/W(O)	–	W		–	2
	091	J23	Step 23 Time unit (0: sec [digits past decimal point ignored], 1: min, 2: hr)	0 to 2	0		R/W(O)	–	W	–	–	1
	092	A24	Step 24 A24 time width, 0.0: End	0 to 3200.0	200.0		R/W(O)		W	–	–	2
	093	B24	Step 24 B24 output value	±320.00%	40.00		R/W(O)	–	W	–	–	2
	094	J24	Step 24 Time unit (0: sec [digits past decimal point ignored], 1: min, 2: hr)	0 to 2	0		R/W(O)	–	W	–	–	1
	095	A25	Step 25 A25 time width, 0.0: End	0 to 3200.0	200.0		R/W(O)	–	W	–	–	2
	096	B25	Step 25 B25 output value	±320.00%	50.00		R/W(O)	–	W	–	–	2
	097	J25	Step 25 Time unit (0: sec [digits past decimal point ignored], 1: min, 2: hr)	0 to 2	0		R/W(O)	–	W	–	–	1
	098	A26	Step 26 A26 time width, 0.0: End	0 to 3200.0	200.0		R/W(O)	–	W	–	–	2
	099	B26	Step 26 B26 output value	±320.00%	60.00		R/W(O)	–	W	–	–	2
	100	J26	Step 26 Time unit (0: sec [digits past decimal point ignored], 1: min, 2: hr)	0 to 2	0		R/W(O)	–	W	–	–	1
	101	A27	Step 27 A27 time width, 0.0: End	0 to 3200.0	200.0		R/W(O)	–	W	–	–	2
	102	B27	Step 27 B27 output value	±320.00%	70.00		R/W(O)	–	W	–	–	2
	103	J27	Step 27 Time unit (0: sec [digits past decimal point ignored], 1: min, 2: hr)	0 to 2	0		R/W(O)	–	W	–	–	1
	104	A28	Step 28 A28 time width, 0.0: End	0 to 3200.0	200.0		R/W(O)	–	W	–	–	2
	105	B28	Step 28 B28 output value	±320.00%	80.00		R/W(O)	–	W	–	–	2
	106	J28	Step 28 Time unit (0: sec [digits past decimal point ignored], 1: min, 2: hr)	0 to 2	0		R/W(O)	–	W	–	–	1
	107	A29	Step 29 A29 time width, 0.0: End	0 to 3200.0	200.0		R/W(O)	–	W	–	–	2
	108	B29	Step 29 B29 output value	±320.00%	90.00		R/W(O)	–	W	–	–	2
	109	J29	Step 29 Time unit (0: sec [digits past decimal point ignored], 1: min, 2: hr)	0 to 2	0		R/W(O)	–	W	–	–	1
	110	A30	Step 30 A30 time width, 0.0: End	0 to 3200.0	200.0		R/W(O)	–	W	–	–	2
	111	B30	Step 30 B30 output value	±320.00%	100.00		R/W(O)	–	W	–	–	2
	112	J30	Step 30 Time unit (0: sec [digits past decimal point ignored], 1: min, 2: hr)	0 to 2	0		R/W(O)	–	W	–	–	1

Wait setting

*1:On the CX-Process Monitor, the R/W mode is indicated in the Tuning screen or in the Control screen.

ITEM TYPE	ITEM	Symbol	Data Description	Data Range	Default	COLD start initialization	R/W Mode R: Read, W: Write, R/W: R/W-enabled, -: R/W-disabled Note: r and r/w: Read and read/write for validate action or monitor run status by CX-Process Tool or Monitor, (S): Initial setting data, (O): Operation data					Data Length (bytes)
							According to CX-Process Tool	According to CX-Process Monitor *1	According to ITEM Setting block	According to Step Ladder Program	Send/ Receive All Blocks	
Parameter	121		Step 1 Wait width (0.00: No wait operation)	0 to 320.00%	0.00	–	R/W(O)	–	W	–	–	2
	122		Step 1 Max. wait time (0.0: Unlimited)	0 to 3200.0	0.0	–	R/W(O)	–	W	–	–	2
	123		Step 2 Wait width (0.00: No wait operation)	0 to 320.00%	0.00	–	R/W(O)	–	W	–	–	2
	124		Step 2 Max. wait time (0.0: Unlimited)	0 to 3200.0	0.0	–	R/W(O)	–	W	–	–	2
	125		Step 3 Wait width (0.00: No wait operation)	0 to 320.00%	0.00	–	R/W(O)	–	W	–	–	2
	126		Step 3 Max. wait time (0.0: Unlimited)	0 to 3200.0	0.0	–	R/W(O)	–	W	–	–	2
	127		Step 4 Wait width (0.00: No wait operation)	0 to 320.00%	0.00	Yes	R/W(O)	–	W	–	–	2
	128		Step 4 Max. wait time (0.0: Unlimited)	0 to 3200.0	0.0	Yes	R/W(O)	–	W	–	–	2
	129		Step 5 Wait width (0.00: No wait operation)	0 to 320.00%	0.00	Yes	R/W(O)	–	W	–	–	2
	130		Step 5 Max. wait time (0.0: Unlimited)	0 to 3200.0	0.0	Yes	R/W(O)	–	W	–	–	2
	131		Step 6 Wait width (0.00: No wait operation)	0 to 320.00%	0.00	–	R/W(O)	–	W	–	–	2
	132		Step 6 Max. wait time (0.0: Unlimited)	0 to 3200.0	0.0	Yes	R/W(O)	–	W	–	–	2
	133		Step 7 Wait width (0.00: No wait operation)	0 to 320.00%	0.00	Yes	R/W(O)	–	W	–	–	2
	134		Step 7 Max. wait time (0.0: Unlimited)	0 to 3200.0	0.0	Yes	R/W(O)	–	W	–	–	2
	135		Step 8 Wait width (0.00: No wait operation)	0 to 320.00%	0.00	Yes	R/W(O)	–	W	–	–	2
	136		Step 8 Max. wait time (0.0: Unlimited)	0 to 3200.0	0.0	Yes	R/W(O)	–	W	–	–	2
	137		Step 9 Wait width (0.00: No wait operation)	0 to 320.00%	0.00	Yes	R/W(O)	–	W	–	–	2
	138		Step 9 Max. wait time (0.0: Unlimited)	0 to 3200.0	0.0	Yes	R/W(O)	–	W	–	–	2
	139		Step 10 Wait width (0.00: No wait operation)	0 to 320.00%	0.00	Yes	R/W(O)	–	W	–	–	2
	140		Step 10 Max. wait time (0.0: Unlimited)	0 to 3200.0	0.0	–	R/W(O)	–	W	–	–	2
	141		Step 11 Wait width (0.00: No wait operation)	0 to 320.00%	0.00	–	R/W(O)	–	W	–	–	2
	142		Step 11 Max. wait time (0.0: Unlimited)	0 to 3200.0	0.0	–	R/W(O)	–	W	–	–	2
	143		Step 12 Wait width (0.00: No wait operation)	0 to 320.00%	0.00	–	R/W(O)	–	W	–	–	2
	144		Step 12 Max. wait time (0.0: Unlimited)	0 to 3200.0	0.0	–	R/W(O)	–	W	–	–	2
	145		Step 13 Wait width (0.00: No wait operation)	0 to 320.00%	0.00	–	R/W(O)	–	W	–	–	2
	146		Step 13 Max. wait time (0.0: Unlimited)	0 to 3200.0	0.0	–	R/W(O)	–	W	–	–	2
	147		Step 14 Wait width (0.00: No wait operation)	0 to 320.00%	0.00	–	R/W(O)	–	W	–	–	2
	148		Step 14 Max. wait time (0.0: Unlimited)	0 to 3200.0	0.0	–	R/W(O)	–	W	–	–	2
	149		Step 15 Wait width (0.00: No wait operation)	0 to 320.00%	0.00	–	R/W(O)	–	W	–	–	2
Parameter	150		Step 15 Max. wait time (0.0: Unlimited)	0 to 3200.0	0.0	–	R/W(O)	–	W	–	–	2
	151		Step 16 Wait width (0.00: No wait operation)	0 to 320.00%	0.00	–	R/W(O)	–	W	–	–	2
	152		Step 16 Max. wait time (0.0: Unlimited)	0 to 3200.0	0.0	–	R/W(O)	–	W	–	–	2
	153		Step 17 Wait width (0.00: No wait operation)	0 to 320.00%	0.00	–	R/W(O)	–	W	–	–	2
	154		Step 17 Max. wait time (0.0: Unlimited)	0 to 3200.0	0.0	–	R/W(O)	–	W	–	–	2

*1:On the CX-Process Monitor, the R/W mode is indicated in the Tuning screen or in the Control screen.

ITEM TYPE	ITEM	Symbol	Data Description	Data Range	Default	COLD start initialization	R/W Mode R: Read, W: Write, R/W: R/W-enabled, -: R/W-disabled Note: r and r/w: Read and read/write for validate action or monitor run status by CX-Process Tool or Monitor, (S): Initial setting data, (O): Operation data					Data Length (bytes)
							According to CX-Process Tool	According to CX-Process Monitor *1	According to ITEM Setting block	According to Step Ladder Program	Send/ Receive All Blocks	
	155		Step 18 Wait width (0.00: No wait operation)	0 to 320.00%	0.00	–	R/W(O)	–	W	–	–	2
	156		Step 18 Max. wait time (0.0: Unlimited)	0 to 3200.0	0.0	–	R/W(O)	–	W	–	–	2
	157		Step 19 Wait width (0.00: No wait operation)	0 to 320.00%	0.00	–	R/W(O)	–	W	–	–	2
	158		Step 19 Max. wait time (0.0: Unlimited)	0 to 3200.0	0.0	–	R/W(O)	–	W	–		2
	159		Step 20 Wait width (0.00: No wait operation)	0 to 320.00%	0.00	–	R/W(O)	–	W	–		2
	160		Step 20 Max. wait time (0.0: Unlimited)	0 to 3200.0	0.0	–	R/W(O)	–	W	–		2
	161		Step 21 Wait width (0.00: No wait operation)	0 to 320.00%	0.00	–	R/W(O)	–	W	–		2
	162		Step 21 Max. wait time (0.0: Unlimited)	0 to 3200.0	0.0	–	R/W(O)	–	W	–		2
	163		Step 22 Wait width (0.00: No wait operation)	0 to 320.00%	0.00	–	R/W(O)	–	W	–	–	2
	164		Step 22 Max. wait time (0.0: Unlimited)	0 to 3200.0	0.0	–	R/W(O)	–	W	–	–	2
	165		Step 23 Wait width (0.00: No wait operation)	0 to 320.00%	0.00	–	R/W(O)	–	W	–	–	2
	166		Step 23 Max. wait time (0.0: Unlimited)	0 to 3200.0	0.0	–	R/W(O)	–	W	–	–	2
	167		Step 24 Wait width (0.00: No wait operation)	0 to 320.00%	0.00	–	R/W(O)	–	W	–	–	2
	168		Step 24 Max. wait time (0.0: Unlimited)	0 to 3200.0	0.0	–	R/W(O)	–	W	–	–	2
	169		Step 25 Wait width (0.00: No wait operation)	0 to 320.00%	0.00	–	R/W(O)	–	W	–	–	2
	170		Step 25 Max. wait time (0.0: Unlimited)	0 to 3200.0	0.0	–	R/W(O)	–	W	–	–	2
	171		Step 26 Wait width (0.00: No wait operation)	0 to 320.00%	0.00	–	R/W(O)	–	W	–	–	2
	172		Step 26 Max. wait time (0.0: Unlimited)	0 to 3200.0	0.0	–	R/W(O)	–	W	–	–	2
	173		Step 27 Wait width (0.00: No wait operation)	0 to 320.00%	0.00	–	R/W(O)	–	W	–	–	2
	174		Step 27 Max. wait time (0.0: Unlimited)	0 to 3200.0	0.0	–	R/W(O)	–	W	–	–	2
	175		Step 28 Wait width (0.00: No wait operation)	0 to 320.00%	0.00	–	R/W(O)	–	W	–	–	2
	176		Step 28 Max. wait time (0.0: Unlimited)	0 to 3200.0	0.0	–	R/W(O)	–	W	–	–	2
	177		Step 29 Wait width (0.00: No wait operation)	0 to 320.00%	0.00	–	R/W(O)	–	W	–	–	2
	178		Step 29 Max. wait time (0.0: Unlimited)	0 to 3200.0	0.0	–	R/W(O)	–	W	–	–	2
	179		Step 30 Wait width (0.00: No wait operation)	0 to 320.00%	0.00	–	R/W(O)	–	W	–	–	2
	180		Step 30 Max. wait time (0.0: Unlimited)	0 to 3200.0	0.0	–	R/W(O)	–	W	–	–	2

*1: These ITEMs were added in Loop Control Unit Ver.2.50.

Step Executing flag

*1:On the CX-Process Monitor, the R/W mode is indicated in the Tuning screen or in the Control screen.

ITEM TYPE	ITEM	Symbol	Data Description	Data Range	Default	COLD start initialization	R/W Mode R: Read, W: Write, R/W: R/W-enabled, -: R/W-disabled Note: r and r/w: Read and read/write for validate action or monitor run status by CX-Process Tool or Monitor, (S): Initial setting data, (O): Operation data					Data Length (bytes)
							According to CX-Process Tool	According to CX-Process Monitor *1	According to ITEM Setting block	According to Step Ladder Program	Send/ Receive All Blocks	
Contact output	221	U11	Step 1 Executing flag	0, 1	0	–	–	–	–	R	–	1
	222	U12	Step 2 Executing flag	0, 1	0	–	–	–	–	R	–	1
Contact output	223	U13	Step 3 Executing flag	0, 1	0	–	–	–	–	R	–	1
	224	U14	Step 4 Executing flag	0, 1	0	–	–	–	–	R	–	1
	225	U15	Step 5 Executing flag	0, 1	0	–	–	–	–	R	–	1
	226	U16	Step 6 Executing flag	0, 1	0	–	–	–	–	R	–	1
	227	U17	Step 7 Executing flag	0, 1	0	–	–	–	–	R	–	1
	228	U18	Step 8 Executing flag	0, 1	0	–	–	–	–	R	–	1
	229	U19	Step 9 Executing flag	0, 1	0	–	–	–	–	R	–	1
	230	U20	Step 10 Executing flag	0, 1	0	–	–	–	–	R	–	1
	231	U21	Step 11 Executing flag	0, 1	0	–	–	–	–	R	–	1
	232	U22	Step 12 Executing flag	0, 1	0	–	–	–	–	R	–	1
	233	U23	Step 13 Executing flag	0, 1	0	–	–	–	–	R	–	1
	234	U24	Step 14 Executing flag	0, 1	0	–	–	–	–	R	–	1
	235	U25	Step 15 Executing flag	0, 1	0	–	–	–	–	R	–	1
	236	U26	Step 16 Executing flag	0, 1	0	–	–	–	–	R	–	1
	237	U27	Step 17 Executing flag	0, 1	0	–	–	–	–	R	–	1
	238	U28	Step 18 Executing flag	0, 1	0	–	–	–	–	R	–	1
	239	U29	Step 19 Executing flag	0, 1	0	–	–	–	–	R	–	1
	240	U30	Step 20 Executing flag	0, 1	0	–	–	–	–	R	–	1
	241	U31	Step 21 Executing flag	0, 1	0	–	–	–	–	R	–	1
	242	U32	Step 22 Executing flag	0, 1	0	–	–	–	–	R	–	1
	243	U33	Step 23 Executing flag	0, 1	0	–	–	–	–	R	–	1
	244	U34	Step 24 Executing flag	0, 1	0	–	–	–	–	R	–	1
	245	U35	Step 25 Executing flag	0, 1	0	–	–	–	–	R	–	1
	246	U36	Step 26 Executing flag	0, 1	0	–	–	–	–	R	–	1
	247	U37	Step 27 Executing flag	0, 1	0	–	–	–	–	R	–	1
	248	U38	Step 28 Executing flag	0, 1	0	–	–	–	–	R	–	1
	249	U39	Step 29 Executing flag	0, 1	0	–	–	–	–	R	–	1
	250	U40	Step 30 Executing flag	0, 1	0	–	–	–	–	R	–	1

Note: •To stop execution of the segment program, set An time width to "0". (U2 arrival at final segment (ITEM016) turns to ON.)
Execution ends when Y2 elapsed time output (ITEM009) reaches 3200.0.
•When a hot start is performed, the segment program starts midway through the segment immediately before the instantaneous power interruption occurred or immediately before the program was stopped according to the elapsed time.

Note ITEMs ITEM022 to ITEM180 can be changed while the segment program is running (for the duration that S1 run/stop command is 1). Any changes made are immediately reflected in program execution.
B0 initial value, A□ time width for each step, B□ final output for each step, J□ time unit for each step, wait width for each step, and maximum wait time for each step

Note Do not change the following ITEMs while the segment program is running (for the duration that S1 run/stop command is 1).
ITEM004 (operation cycle), ITEM012 (elapsed time unit)
Before you change the values of these ITEMs, temporarily set S1 run/stop command to 0 (OFF). After you have changed the values, set S1 run/stop command to 1 (ON) and restart the program.

List of tag ITEMs on CX-Process Monitor or SCADA software

The following tag ITEMs are used to specify ITEMs with either 1) Monitor tags when sending function blocks to the CX-Process Monitor from 1-Block/4-Block Send Terminal to Computer (Block Model 403/404) or 2) CSV tags from SCADA software when sending/receiving data to/from the CPU Unit using Receive All Blocks (Block Model 461)/Send All Blocks (Block Model 462). All tag ITEMs are fixed and cannot be changed.

ITEM	Data Name	CSV Tags in CX-Process Monitor	CSV Tags in SCADA Software
		Tag ITEM(fixed)	Tag ITEM(fixed)
000	Stop block operation command	MT_ST	MT_ST
003	Execution error display	None	ERR
007	Reference input	X1	X1
008	Program output	None	Y1
009	Elapsed time output	None	Y2
011	Step output	None	Y3
012	Elapsed time unit	None	H1
013	Run/stop command	S1	S1
014	Hold switch	S2	S2
015	X1 input error	U1	U1
016	Arrival at final segment	U2	U2
017	Move to next wait command	S3	S3
018	Move to next step command	S4	S4
019	Waiting	U10	U10
020	Reference input disable switch	S5	S5

Note Note that this function block cannot be sent by the 1-Block Send Terminal to Computer block (Block Model 403).

Block Model	Block Name	Block Address
<161>	Rank Selector	100 to 349

Outline

This function block specifies the rank of up to eight analog signals, and selects the data of the specified rank.
The rank within analog signals having the same value is not specified.

Function block applications

High selector, low selector, specific rank selector control

Block diagram

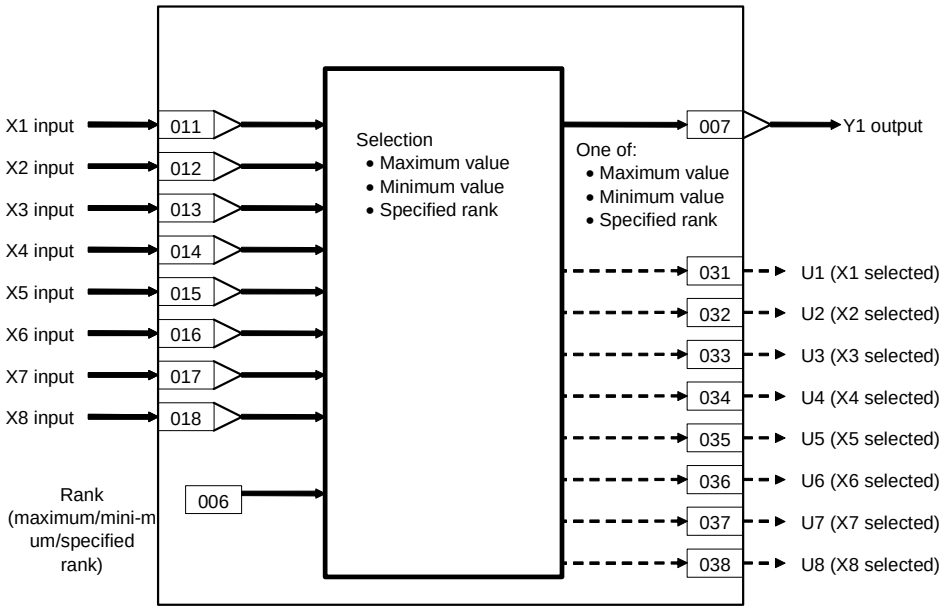

ITEM list

*1:On the CX-Process Monitor, the R/W mode is indicated in the Tuning screen or in the Control screen.

ITEM TYPE	ITEM	Symbol	Data Description	Data Range	Default	COLD start initialization	R/W Mode R: Read, W: Write, R/W: R/W-enabled, -: R/W-disabled Note: r and r/w: Read and read/write for validate action or monitor run status by CX-Process Tool or Monitor, (S): Initial setting data, (O): Operation data					Data Length (bytes)
							According to CX-Process Tool	According to CX-Process Monitor *1	According to ITEM Setting block	According to Step Ladder Program	Send/ Receive All Blocks	
Contact input	000		Stop block operation command (0: Cancel stop, 1: Stop)	0, 1	0	–	–	–	–	–	S/R	1
Parameter	001		Comment	23 characters	Block name	–	R/W(S)	–	–	–	–	24
	002		Block Model: Rank Selector	161	161	–	R/W(S)	–	–	–	–	2
Special	003		Execution error display 0: Normal, Other: Error (See Appendix "Execution Error Code List")		0000	–	r	–	–	–	S	2
Parameter	004		Operation cycle (sec) 0: Common, 1: 0.1, 2: 0.2, 3: 0.5, 4: 1, 5: 2	0 to 5	0	–	R/W(S)	–	–	–	–	2
	006		X rank (1: Maximum value, 8: Minimum value, 2 to 7: Specified rank [in order of highest rank])	1 to 8	8	–	R/W(O)	–	W	–	–	1
Analog output	007	Y1	Output	±320.00%	0.00	Yes	r/w	–	–	–	S	2
Analog input connection information	011		X1 source designation (BBB: Block address, III: ITEM No.)	BBBIII	000000	–	R/W(S)	–	–	–	–	4
	012		X2 source designation (BBB: Block address, III: ITEM No.)	BBBIII	000000	–	R/W(S)	–	–	–	–	4
	013		X3 source designation (BBB: Block address, III: ITEM No.)	BBBIII	000000	–	R/W(S)	–	–	–	–	4
	014		X4 source designation (BBB: Block address, III: ITEM No.)	BBBIII	000000	–	R/W(S)	–	–	–	–	4
	015		X5 source designation (BBB: Block address, III: ITEM No.)	BBBIII	000000	–	R/W(S)	–	–	–	–	4
	016		X6 source designation (BBB: Block address, III: ITEM No.)	BBBIII	000000	–	R/W(S)	–	–	–	–	4
	017		X7 source designation (BBB: Block address, III: ITEM No.)	BBBIII	000000	–	R/W(S)	–	–	–	–	4
	018		X8 source designation (BBB: Block address, III: ITEM No.)	BBBIII	000000	–	R/W(S)	–	–	–	–	4
Analog input	021	X1	Input	±320.00%	0.00	Yes	r	–	–	–	S	2
	022	X2	Input	±320.00%	0.00	Yes	r	–	–	–	S	2
	023	X3	Input	±320.00%	0.00	Yes	r	–	–	–	S	2
	024	X4	Input	±320.00%	0.00	Yes	r	–	–	–	S	2
	025	X5	Input	±320.00%	0.00	Yes	r	–	–	–	S	2
	026	X6	Input	±320.00%	0.00	Yes	r	–	–	–	S	2
	027	X7	Input	±320.00%	0.00	Yes	r	–	–	–	S	2
	028	X8	Input	±320.00%	0.00	Yes	r	–	–	–	S	2
Contact output	031	U1	X1 selected	0, 1	0	Yes	–	–	–	R	S	1
	032	U2	X2 selected	0, 1	0	Yes	–	–	–	R	S	1
	033	U3	X3 selected	0, 1	0	Yes	–	–	–	R	S	1
	034	U4	X4 selected	0, 1	0	Yes	–	–	–	R	S	1
	035	U5	X5 selected	0, 1	0	Yes	–	–	–	R	S	1
	036	U6	X6 selected	0, 1	0	Yes	–	–	–	R	S	1
	037	U7	X7 selected	0, 1	0	Yes	–	–	–	R	S	1
	038	U8	X8 selected	0, 1	0	Yes	–	–	–	R	S	1

Note: Connection of ITEM011 and ITEM012 are mandatory. ITEM013 to ITEM106 need not be connected. (In this case, the input value becomes -320.00%.)

List of tag ITEMs on SCADA software

The following tag ITEMs are used to specify ITEMs with CSV tags from SCADA software when sending/receiving data to/from the CPU Unit using Receive All Blocks (model 461)/Send All Blocks (model 462). All tag ITEMs are fixed and cannot be changed.

ITEM	Data Name	CSV Tags in SCADA Software
		Tag ITEM (fixed)
000	Stop block operation command	MT_ST
003	Execution error display	ERR
007	Output	Y1
021	X1 input	X1
022	X2 input	X2
023	X3 input	X3
024	X4 input	X4
025	X5 input	X5
026	X6 input	X6
027	X7 input	X7
028	X8 input	X8
031	X1 selected	U1
032	X2 selected	U2
033	X3 selected	U3
034	X4 selected	U4
035	X5 selected	U5
036	X6 selected	U6
037	X7 selected	U7
038	X8 selected	U8

Block Model	Block Name	Block Address
<162>	Input Selector	100 to 349

Outline

This function block selects a single analog signal specified by the contact signal from up to eight analog signals.
This function block differs from the Constant Selector block (Block Model 165) in that selection is made from analog values to be converted and not from fixed values.

Function block applications

Multiplexer

Block diagram

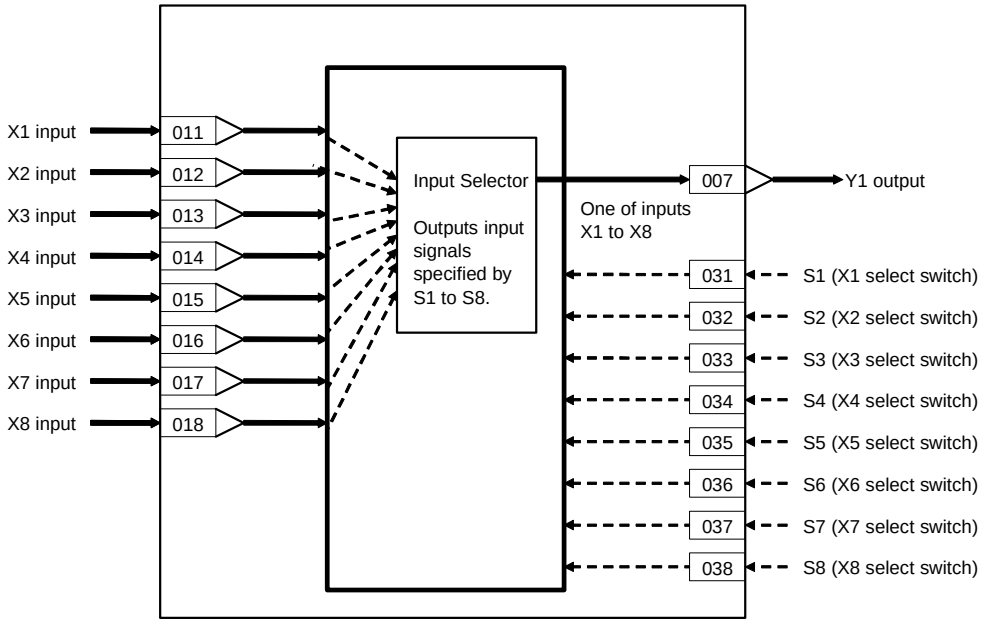

The analog signal is selected by the select switch changing to 1 (ON). When multiple select switches are 1 (ON), the switch having the smallest number among S1 to S8 is valid.

ITEM list

*1:On the CX-Process Monitor, the R/W mode is indicated in the Tuning screen or in the Control screen.

ITEM TYPE	ITEM	Symbol	Data Description	Data Range	Default	COLD start initialization	R/W Mode R: Read, W: Write, R/W: R/W-enabled, -: R/W-disabled Note: r and r/w: Read and read/write for validate action or monitor run status by CX-Process Tool or Monitor, (S): Initial setting data, (O): Operation data					Data Length (bytes)
							According to CX-Process Tool	According to CX-Process Monitor *1	According to ITEM Setting block	According to Step Ladder Program	Send/ Receive All Blocks	
Contact input	000		Stop block operation command (0: Cancel stop, 1: Stop)	0, 1	0	–	–	–	–	–	S/R	1
Parameter	001		Comment	23 characters	Block name	–	R/W(S)	–	–	–	–	24
	002		Block Model: Input Selector	162	162	–	R/W(S)	–	–	–	–	2
Special	003		Execution error display 0: Normal, Other: Error (See Appendix "Execution Error Code List")		0000	–	r	–	–	–	S	2
Parameter	004		Operation cycle (sec) 0: Common, 1: 0.1, 2: 0.2, 3: 0.5, 4: 1, 5: 2	0 to 5	0	–	R/W(S)	–	–	–	–	2
Analog output	007	Y1	Output	±320.00%	0.00	Yes	r/w	–	–	–	S	2
Analog input connection information	011		X1 source designation (BBB: Block address, III: ITEM No.)	BBBIII	000000	–	R/W(S)	–	–	–	–	4
	012		X2 source designation (BBB: Block address, III: ITEM No.)	BBBIII	000000	–	R/W(S)	–	–	–	–	4
	013		X3 source designation (BBB: Block address, III: ITEM No.)	BBBIII	000000	–	R/W(S)	–	–	–	–	4
	014		X4 source designation (BBB: Block address, III: ITEM No.)	BBBIII	000000	–	R/W(S)	–	–	–	–	4
	015		X5 source designation (BBB: Block address, III: ITEM No.)	BBBIII	000000	–	R/W(S)	–	–	–	–	4
	016		X6 source designation (BBB: Block address, III: ITEM No.)	BBBIII	000000	–	R/W(S)	–	–	–	–	4
	017		X7 source designation (BBB: Block address, III: ITEM No.)	BBBIII	000000	–	R/W(S)	–	–	–	–	4
	018		X8 source designation (BBB: Block address, III: ITEM No.)	BBBIII	000000	–	R/W(S)	–	–	–	–	4
Analog input	021	X1	Input	±320.00%	0.00	Yes	r	–	–	–	S	2
	022	X2	Input	±320.00%	0.00	Yes	r	–	–	–	S	2
	023	X3	Input	±320.00%	0.00	Yes	r	–	–	–	S	2
	024	X4	Input	±320.00%	0.00	Yes	r	–	–	–	S	2
	025	X5	Input	±320.00%	0.00	Yes	r	–	–	–	S	2
	026	X6	Input	±320.00%	0.00	Yes	r	–	–	–	S	2
	027	X7	Input	±320.00%	0.00	Yes	r	–	–	–	S	2
	028	X8	Input	±320.00%	0.00	Yes	r	–	–	–	S	2
Contact input	031	S1	X1 select switch --- Selected by "1"	0, 1	0	Yes	R/W(O)	–	–	R/W	S/R	1
	032	S 2	X2 select switch --- Selected by "1"	0, 1	0	Yes	R/W(O)	–	–	R/W	S/R	1
	033	S 3	X3 select switch --- Selected by "1"	0, 1	0	Yes	R/W(O)	–	–	R/W	S/R	1
	034	S 4	X4 select switch --- Selected by "1"	0, 1	0	Yes	R/W(O)	–	–	R/W	S/R	1
	035	S 5	X5 select switch --- Selected by "1"	0, 1	0	Yes	R/W(O)	–	–	R/W	S/R	1
	036	S 6	X6 select switch --- Selected by "1"	0, 1	0	Yes	R/W(O)	–	–	R/W	S/R	1
	037	S 7	X7 select switch --- Selected by "1"	0, 1	0	Yes	R/W(O)	–	–	R/W	S/R	1
	038	S 8	X8 select switch --- Selected by "1"	0, 1	0	Yes	R/W(O)	–	–	R/W	S/R	1

Note1: Connection of ITEM011 and ITEM012 are mandatory. ITEM013 to ITEM106 need not be connected. (In this case, the input value becomes -320.00%.)

Note2: Inputs are selected by X1 to X8 select switches changing to 1 (ON) and not when operation is started. When multiple select switches are 1 (ON), the select switch for the ITEM having the smallest ITEM number is valid.

List of tag ITEMs on SCADA software

The following tag ITEMs are used to specify ITEMs with CSV tags from SCADA software when sending/receiving data to/from the CPU Unit using Receive All Blocks (model 461)/Send All Blocks (model 462). All tag ITEMs are fixed and cannot be changed.

ITEM	Data Name	CSV Tags in SCADA Software
		Tag ITEM (fixed)
000	Stop block operation command	MT_ST
003	Execution error display	ERR
007	Output	Y1
021	X1 input	X1
022	X2 input	X2
023	X3 input	X3
024	X4 input	X4
025	X5 input	X5
026	X6 input	X6
027	X7 input	X7
028	X8 input	X8
031	X1 select switch	S1
032	X2 select switch	S2
033	X3 select switch	S3
034	X4 select switch	S4
035	X5 select switch	S5
036	X6 select switch	S6
037	X7 select switch	S7
038	X8 select switch	S8

Block Model	Block Name	Block Address
<163>	3-input Selector	100 to 349

Outline

This function block selects and outputs one of three analog input signals. Three sets of analog input signals are held by this function.

•In addition to switching of three analog input signals, the previous value can also be held.

Function block applications

Switching of measuring systems or sensors having different measurement targets

Block diagram

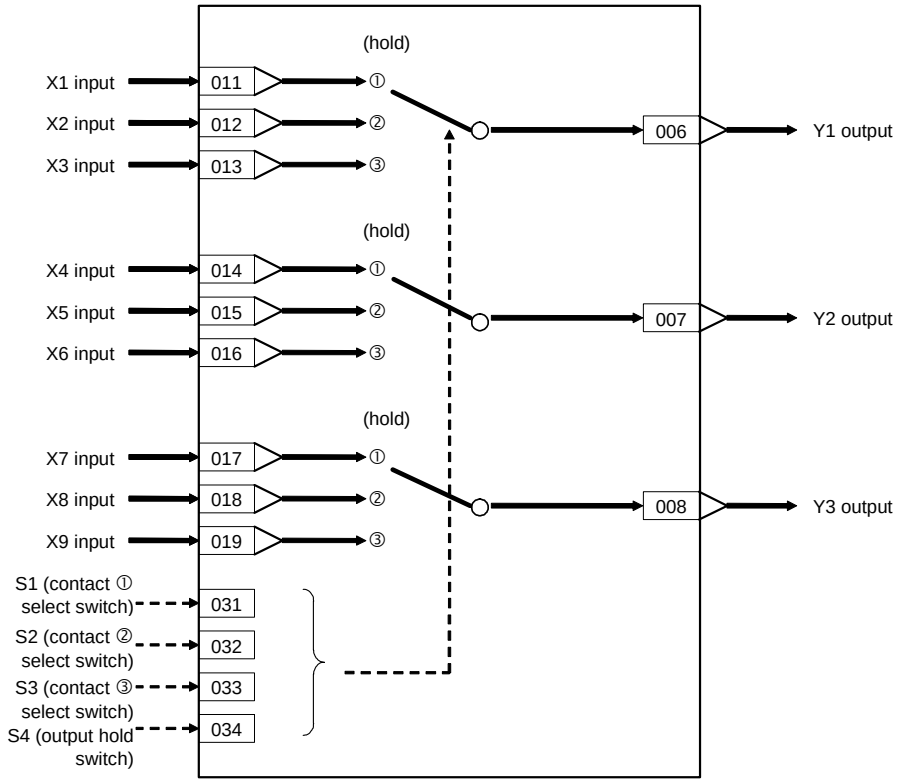

When S1 contact select switch is 1 (ON), X1, X4 and X7 are selected, and are output to Y1, Y2 and Y3, respectively.
When S2 contact select switch is 1 (ON), X2, X5 and X8 are selected, and are output to Y1, Y2 and Y3, respectively.
When S3 contact select switch is 1 (ON), X3, X6 and X9 are selected, and are output to Y1, Y2 and Y3, respectively.
When S4 output hold switch is 1 (ON), X1 to X9 inputs are not selected. The previous output values are held for Y1, Y2 and Y3 outputs in this case.

Note: •Use the OUT command or SET command in the Step Ladder Program block (Block Model 301) for manipulating the S1 to S4 contact select switches.
•An error (execution error code 19: inappropriate operation) occurs when two or more S1 to S3 contact select switches are specified at the same time. If an error occurs, the output value that was active before the error occurs is held.
•When S4 contact switch is set to 1 (ON) at the same time as S1 to S3, the setting of S4 (output hold switch) is given priority.

ITEM list

*1:On the CX-Process Monitor, the R/W mode is indicated in the Tuning screen or in the Control screen.

ITEM TYPE	ITEM	Symbol	Data Description	Data Range	Default	COLD start initialization	R/W Mode R: Read, W: Write, R/W: R/W-enabled, -: R/W-disabled Note: r and r/w: Read and read/write for validate action or monitor run status by CX-Process Tool or Monitor, (S): Initial setting data, (O): Operation data					Data Length (bytes)
							According to CX-Process Tool	According to CX-Process Monitor *1	According to ITEM Setting block	According to Step Ladder Program	Send/ Receive All Blocks	
Contact input	000		Stop block operation command (0: Cancel stop, 1: Stop)	0, 1	0	–	–	–	–	–	S/R	1
Parameter	001		Comment	23 characters	Block name	–	R/W(S)	–	–	–	–	24
	002		Block Model: 3-input Selector	163	163	–	R/W(S)	–	–	–	–	2
Special	003		Execution error display 0: Normal, Other: Error (See Appendix "Execution Error Code List")		0000	–	r	–	–	–	S	2
Parameter	004		Operation cycle (s) 0: Common, 1: 0.1, 2: 0.2, 3: 0.5, 4: 1, 5: 2	0 to 5	0	–	R/W(S)	–	–	–	–	2
Analog output	006	Y1	Output	±320.00%	0.00	Yes	R/W(O)	–	–	–	S	2
	007	Y2	Output	±320.00%	0.00	Yes	R/W(O)	–	–	–	S	2
	008	Y3	Output	±320.00%	0.00	Yes	R/W(O)	–	–	–	S	2
Analog input connection information	011		X1 source designation (BBB: Block address, III: ITEM No.)	BBBIII	000000	–	R/W(S)	–	–	–	–	4
	012		X2 source designation (BBB: Block address, III: ITEM No.)	BBBIII	000000	–	R/W(S)	–	–	–	–	4
	013		X3 source designation (BBB: Block address, III: ITEM No.)	BBBIII	000000	–	R/W(S)	–	–	–	–	4
	014		X4 source designation (BBB: Block address, III: ITEM No.)	BBBIII	000000	–	R/W(S)	–	–	–	–	4
	015		X5 source designation (BBB: Block address, III: ITEM No.)	BBBIII	000000	–	R/W(S)	–	–	–	–	4
	016		X6 source designation (BBB: Block address, III: ITEM No.)	BBBIII	000000	–	R/W(S)	–	–	–	–	4
	017		X7 source designation (BBB: Block address, III: ITEM No.)	BBBIII	000000	–	R/W(S)	–	–	–	–	4
	018		X8 source designation (BBB: Block address, III: ITEM No.)	BBBIII	000000	–	R/W(S)	–	–	–	–	4
	019		X9 source designation (BBB: Block address, III: ITEM No.)	BBBIII	000000	–	R/W(S)	–	–	–	–	4
Analog input	021	X1	Input	±320.00%	0.00	Yes	r	–	–	–	S	2
	022	X2	Input	±320.00%	0.00	Yes	r	–	–	–	S	2
	023	X3	Input	±320.00%	0.00	Yes	r	–	–	–	S	2
	024	X4	Input	±320.00%	0.00	Yes	r	–	–	–	S	2
	025	X5	Input	±320.00%	0.00	Yes	r	–	–	–	S	2
	026	X6	Input	±320.00%	0.00	Yes	r	–	–	–	S	2
	027	X7	Input	±320.00%	0.00	Yes	r	–	–	–	S	2
	028	X8	Input	±320.00%	0.00	Yes	r	–	–	–	S	2
	029	X9	Input	±320.00%	0.00	Yes	r	–	–	–	S	2
Contact input	031	S1	S1 select switch	0, 1	0	Yes	R/W(O)	–	–	R/W	S/R	1
	032	S2	S2 select switch	0, 1	0	Yes	R/W(O)	–	–	R/W	S/R	1
	033	S3	S3 select switch	0, 1	0	Yes	R/W(O)	–	–	R/W	S/R	1
	034	S4	Output hold switch --- Output is held when set to ON.	0, 1	0	Yes	R/W(O)	–	–	R/W	S/R	1

List of tag ITEMs on SCADA software

The following tag ITEMs are used to specify ITEMs with CSV tags from SCADA software when sending/receiving data to/from the CPU Unit using Receive All Blocks (model 461)/Send All Blocks (model 462). All tag ITEMs are fixed and cannot be changed.

ITEM	Data Name	CSV Tags in SCADA Software
		Tag ITEM (fixed)
000	Stop block operation command	MT_ST
003	Execution error display	ERR
006	Y1 output	Y1
007	Y2 output	Y2
008	Y3 output	Y3
021	X1 input	X1
022	X2 input	X2
023	X3 input	X3
024	X4 input	X4
025	X5 input	X5
026	X6 input	X6
027	X7 input	X7
028	X8 input	X8
029	X9 input	X9
031	S1 select switch	S1
032	S2 select switch	S2
033	S3 select switch	S3
034	Output hold switch	S4

Block Model	Block Name	Block Address
<164>	3-output Selector	100 to 349

Outline

This function block selects and outputs one analog input signal to one of three switched outputs.
Three sets of analog input signal and switched output are held by this function block.

•In addition to switching to one of three switched outputs, the previous value can also be held.

Function block applications

Selection of control panels or control targets having different targets to be manipulated

Block diagram

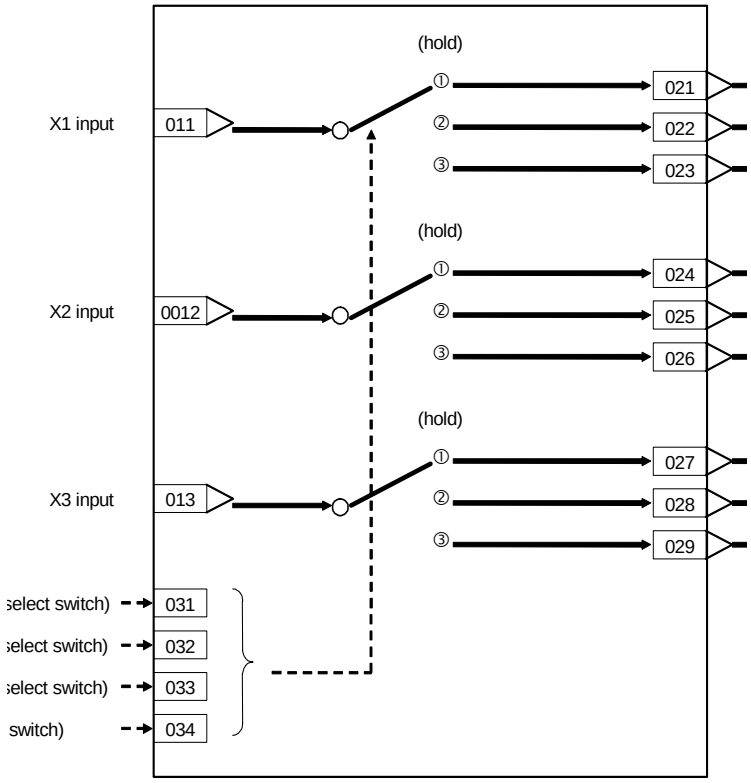

When S1 contact select switch is 1 (ON), X1, X2 and X3 inputs are output to Y1, Y4 and Y7, respectively.
When S2 contact select switch is 1 (ON), X1, X2 and X3 inputs are output to Y2, Y5 and Y8, respectively.
When S3 contact select switch is 1 (ON), X1, X2 and X3 inputs are output to Y3, Y6 and Y9, respectively.
When S4 output hold switch is 1 (ON), X1 to X3 inputs are not output. The previous output values are held for Y1 through Y9 outputs in this case.

Note: •Use the OUT command or SET command in the Step Ladder Program block (Block Model 301) for manipulating the S1 to S4 switches.
•An error (execution error code 19: inappropriate operation) occurs when two or more S1 to S3 contact select switches are specified at the same time. If an error occurs, the output value that was active before the error occurs is held.
•When S4 output hold switch is set to 1 (ON) at the same time as S1 to S3, the setting of S4 is given priority.

ITEM list

*1:On the CX-Process Monitor, the R/W mode is indicated in the Tuning screen or in the Control screen.

ITEM TYPE	ITEM	Symbol	Data Description	Data Range	Default	COLD start initialization	R/W Mode R: Read, W: Write, R/W: R/W-enabled, -: R/W-disabled Note: r and r/w: Read and read/write for validate action or monitor run status by CX-Process Tool or Monitor, (S): Initial setting data, (O): Operation data					Data Length (bytes)
							According to CX-Process Tool	According to CX-Process Monitor *1	According to ITEM Setting block	According to Step Ladder Program	Send/ Receive All Blocks	
Contact input	000		Stop block operation command (0: Cancel stop, 1: Stop)	0, 1	0	–	–	–	–	R/W	S/R	1
Parameter	001		Comment	23 characters	Block name	–	R/W(S)	–	–	–	–	24
	002		Block Model: 3-output Selector	164	164	–	R/W(S)	–	–	–	–	2
Special	003		Execution error display 0: Normal, Other: Error (See Appendix "Execution Error Code List")		0000	–	r	–	–	–	S	2
Parameter	004		Operation cycle (s) 0: Common, 1: 0.1, 2: 0.2, 3: 0.5, 4: 1, 5: 2	0 to 5	0	–	R/W(S)	–	–	–	–	2
Analog input wiring information	011		X1 source designation BBB: Block address, III: ITEM No.	BBBIII	000000	–	R/W(S)	–	–	–	–	4
	012		X2 source designation BBB: Block address, III: ITEM No.	BBBIII	000000	–	R/W(S)	–	–	–	–	4
	013		X3 source designation BBB: Block address, III: ITEM No.	BBBIII	000000	–	R/W(S)	–	–	–	–	4
Analog input	014	X1	X1 input	±320.00%	0.00	Yes	r	–	–	–	S	2
	015	X2	X2 input	±320.00%	0.00	Yes	r	–	–	–	S	2
	016	X3	X3 input	±320.00%	0.00	Yes	r	–	–	–	S	2
Analog output	021	Y1	Output	±320.00%	0.00	Yes	R/W(O)	–	–	–	S	2
	022	Y2	Output	±320.00%	0.00	Yes	R/W(O)	–	–	–	S	2
	023	Y3	Output	±320.00%	0.00	Yes	R/W(O)	–	–	–	S	2
	024	Y4	Output	±320.00%	0.00	Yes	R/W(O)	–	–	–	S	2
	025	Y5	Output	±320.00%	0.00	Yes	R/W(O)	–	–	–	S	2
	026	Y6	Output	±320.00%	0.00	Yes	R/W(O)	–	–	–	S	2
	027	Y7	Output	±320.00%	0.00	Yes	R/W(O)	–	–	–	S	2
	028	Y8	Output	±320.00%	0.00	Yes	R/W(O)	–	–	–	S	2
	029	Y9	Output	±320.00%	0.00	Yes	R/W(O)	–	–	–	S	2
Contact input	031	S1	S1 select switch	0, 1	0	–	R/W(O)	–	–	R/W	S/R	1
	032	S2	S2 select switch	0, 1	0	–	R/W(O)	–	–	R/W	S/R	1
	033	S3	S3 select switch	0, 1	0	–	R/W(O)	–	–	R/W	S/R	1
	034	S4	Output hold switch --- Output is held when set to ON.	0, 1	0	–	R/W(O)	–	–	R/W	S/R	1

List of tag ITEMs on SCADA software

The following tag ITEMs are used to specify ITEMs with CSV tags from SCADA software when sending/receiving data to/from the CPU Unit using Receive All Blocks (model 461)/Send All Blocks (model 462). All tag ITEMs are fixed and cannot be changed.

ITEM	Data Name	CSV Tags in SCADA Software
		Tag ITEM (fixed)
000	Stop block operation command	MT_ST
003	Execution error display	ERR
014	X1 input	X1
015	X2 input	X2
016	X3 input	X3
021	Y1 output	Y1
022	Y2 output	Y2
023	Y3 output	Y3
024	Y4 output	Y4
025	Y5 output	Y5
026	Y6 output	Y6
027	Y7 output	Y7
028	Y8 output	Y8
029	Y9 output	Y9
031	S1 select switch	S1
032	S2 select switch	S2
033	S3 select switch	S3
034	Output hold switch	S4

Block Model	Block Name	Block Address
<165>	Constant Selector	100 to 349

Outline

This function block selects eight preset constants (fixed values) by the contact signal, and outputs the selected constant as an analog signal.
This function block differs from the Input Selector block (Block Model 162) in that the constants are selected from fixed values and not from analog values that change.

Function block applications

Switching of multiple parameters (e.g. Set Point values)

Block diagram

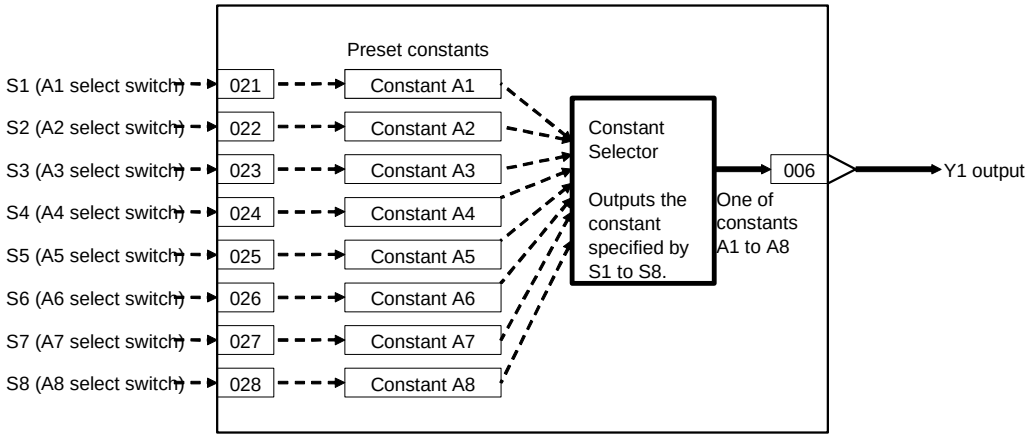

The analog signal is selected by the select switch changing to 1 (ON). When multiple select switches are 1 (ON), the switch having the smallest number among S1 to S8 is valid.

ITEM list

*1:On the CX-Process Monitor, the R/W mode is indicated in the Tuning screen or in the Control screen.

ITEM TYPE	ITEM	Symbol	Data Description	Data Range	Default	COLD start initialization	R/W Mode R: Read, W: Write, R/W: R/W-enabled, -: R/W-disabled Note: r and r/w: Read and read/write for validate action or monitor run status by CX-Process Tool or Monitor, (S): Initial setting data, (O): Operation data					Data Length (bytes)
							According to CX-Process Tool	According to CX-Process Monitor *1	According to ITEM Setting block	According to Step Ladder Program	Send/ Receive All Blocks	
Contact input	000		Stop block operation command (0: Cancel stop, 1: Stop)	0, 1	0	–	–	–	–	–	S/R	1
Parameter	001		Comment	23 characters	Block name	–	R/W(S)	–	–	–	–	24
	002		Block Model: Constant Selector	165	165	–	R/W(S)	–	–	–	–	2
Special	003		Execution error display 0: Normal, Other: Error (See Apendix "Execution Error Code List.")		0000	–	r	–	–	–	S	2
Parameter	004		Operation cycle (sec) 0: Common, 1: 0.1, 2: 0.2, 3: 0.5, 4: 1, 5: 2	0 to 5	0	–	R/W(S)	–	–	–	–	2
Analog output	006	Y1	Output	±320.00%	0.00	Yes	r/w	–	–	–	S	2
Parameter	011	A1	A1 constant	±320.00%	0.00	–	R/W(O)	–	W	–	S/R	2
	012	A2	A2 constant	±320.00%	0.00	–	R/W(O)	–	W	–	S/R	2
	013	A3	A3 constant	±320.00%	0.00	–	R/W(O)	–	W	–	S/R	2
	014	A4	A4 constant	±320.00%	0.00	–	R/W(O)	–	W	–	S/R	2
	015	A5	A5 constant	±320.00%	0.00	–	R/W(O)	–	W	–	S/R	2
	016	A6	A6 constant	±320.00%	0.00	–	R/W(O)	–	W	–	S/R	2
	017	A7	A7 constant	±320.00%	0.00	–	R/W(O)	–	W	–	S/R	2
	018	A8	A8 constant	±320.00%	0.00	–	R/W(O)	–	W	–	S/R	2
Contact input	021	S1	A1 select switch --- Selected by "1"	0, 1	0	Yes	R/W(O)	–	–	R/W	S/R	1
	022	S2	A2 select switch --- Selected by "1"	0, 1	0	Yes	R/W(O)	–	–	R/W	S/R	1
	023	S3	A3 select switch --- Selected by "1"	0, 1	0	Yes	R/W(O)	–	–	R/W	S/R	1
	024	S4	A4 select switch --- Selected by "1"	0, 1	0	Yes	R/W(O)	–	–	R/W	S/R	1
	025	S5	A5 select switch --- Selected by "1"	0, 1	0	Yes	R/W(O)	–	–	R/W	S/R	1
	026	S6	A6 select switch --- Selected by "1"	0, 1	0	Yes	R/W(O)	–	–	R/W	S/R	1
	027	S7	A7 select switch --- Selected by "1"	0, 1	0	Yes	R/W(O)	–	–	R/W	S/R	1
	028	S8	A8 select switch --- Selected by "1"	0, 1	0	Yes	R/W(O)	–	–	R/W	S/R	1

Note: Inputs are selected by A1 to A8 select switches changing to 1 (ON) and not when operation is started. When multiple select switches are 1 (ON), the select switch for the ITEM having the smallest ITEM number is valid.

List of tag ITEMs on SCADA software

The following tag ITEMs are used to specify ITEMs with CSV tags from SCADA software when sending/receiving data to/from the CPU Unit using Receive All Blocks (model 461)/Send All Blocks (model 462). All tag ITEMs are fixed and cannot be changed.

ITEM	Data Name	CSV Tags in SCADA Software
		Tag ITEM (fixed)
000	Stop block operation command	MT_ST
003	Execution error display	ERR
006	Output	Y1
011	A1 constant	A1
012	A2 constant	A2
013	A3 constant	A3
014	A4 constant	A4
015	A5 constant	A5
016	A6 constant	A6
017	A7 constant	A7
018	A8 constant	A8
021	A1 select switch	S1
022	A2 select switch	S2
023	A3 select switch	S3
024	A4 select switch	S4
025	A5 select switch	S5
026	A6 select switch	S6
027	A7 select switch	S7
028	A8 select switch	S8

Block Model	Block Name	Block Address
<166>	Constant Generator	100 to 349

Outline

This function block outputs eight preset constants (fixed values) in batch manner as analog signals.
All A1 to A8 constants are output to Y1 to Y8 analog outputs at all times.

Function block applications

Use of certain fixed values as input values (e.g. to make one of the values in an addition operation a fixed value)

Block diagram

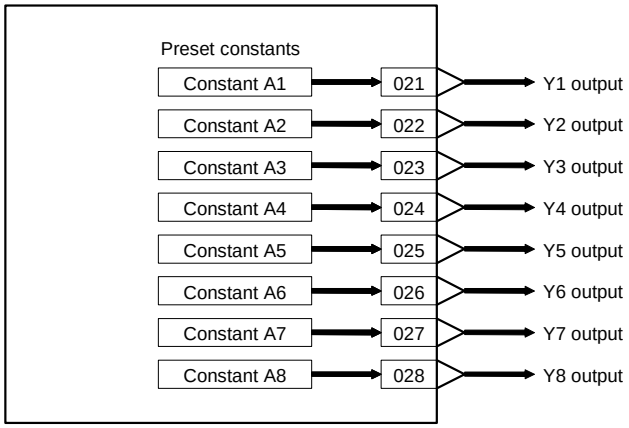

ITEM list

*1:On the CX-Process Monitor, the R/W mode is indicated in the Tuning screen or in the Control screen.

ITEM TYPE	ITEM	Symbol	Data Description	Data Range	Default	COLD start initialization	R/W Mode R: Read, W: Write, R/W: R/W-enabled, -: R/W-disabled Note: r and r/w: Read and read/write for validate action or monitor run status by CX-Process Tool or Monitor, (S): Initial setting data, (O): Operation data					Data Length (bytes)
							According to CX-Process Tool	According to CX-Process Monitor *1	According to ITEM Setting block	According to Step Ladder Program	Send/ Receive All Blocks	
Contact input	000		Stop block operation command (0: Cancel stop, 1: Stop)	0, 1	0	–	–	–	–	–	S/R	1
Parameter	001		Comment	23 characters	Block name	–	R/W(S)	–	–	–	–	24
	002		Block Model: Constant Generator	166	166	–	R/W(S)	–	–	–	–	2
Special	003		Execution error display 0: Normal, Other: Error (See Appendix "Execution Error Code List.")		0000	–	r	–	–	–	S	2
Parameter	004		Operation cycle (sec) 0: Common, 1: 0.1, 2: 0.2, 3: 0.5, 4: 1, 5: 2	0 to 5	0	–	R/W(S)	–	–	–	–	2
Parameter	011	A1	A1 constant	±320.00%	0.00	–	R/W(O)	–	W	–	S/R	2
	012	A2	A2 constant	±320.00%	0.00	–	R/W(O)	–	W	–	S/R	2
	013	A3	A3 constant	±320.00%	0.00	–	R/W(O)	–	W	–	S/R	2
	014	A4	A4 constant	±320.00%	0.00	–	R/W(O)	–	W	–	S/R	2
	015	A5	A5 constant	±320.00%	0.00	–	R/W(O)	–	W	–	S/R	2
	016	A6	A6 constant	±320.00%	0.00	–	R/W(O)	–	W	–	S/R	2
	017	A7	A7 constant	±320.00%	0.00	–	R/W(O)	–	W	–	S/R	2
	018	A8	A8 constant	±320.00%	0.00	–	R/W(O)	–	W	–	S/R	2
Analog output	021	Y1	Output	±320.00%	0.00	Yes	r/w	–	–	–	–	2
	022	Y2	Output	±320.00%	0.00	Yes	r/w	–	–	–	–	2
	023	Y3	Output	±320.00%	0.00	Yes	r/w	–	–	–	–	2
	024	Y4	Output	±320.00%	0.00	Yes	r/w	–	–	–	–	2
	025	Y5	Output	±320.00%	0.00	Yes	r/w	–	–	–	–	2
	026	Y6	Output	±320.00%	0.00	Yes	r/w	–	–	–	–	2
	027	Y7	Output	±320.00%	0.00	Yes	r/w	–	–	–	–	2
	028	Y8	Output	±320.00%	0.00	Yes	r/w	–	–	–	–	2

List of tag ITEMs on SCADA software

The following tag ITEMs are used to specify ITEMs with CSV tags from SCADA software when sending/receiving data to/from the CPU Unit using Receive All Blocks (model 461)/Send All Blocks (model 462). All tag ITEMs are fixed and cannot be changed.

ITEM	Data Name	CSV Tags in SCADA Software
		Tag ITEM (fixed)
000	Stop block operation command	MT_ST
003	Execution error display	ERR
011	A1 constant	A1
012	A2 constant	A2
013	A3 constant	A3
014	A4 constant	A4
015	A5 constant	A5
016	A6 constant	A6
017	A7 constant	A7
018	A8 constant	A8

Block Model	Block Name	Block Address
<167>	Ramped Switch	001 to 032

Outline

The function block creates a ramped switch that switches between two analog inputs, X1 and X2, or constants.
When the status of the Input Switch Command, S1, is changed, output Y1 is changed at a constant rate to equal the value of analog input X1 or analog input X2 at the end of the specified time.
Ramped Switch blocks can be used when it is necessary to change a process value gradually over a set period of time.
Note: Internal values resulting from calculations from just prior to power interruptions or stopping operation are cleared for cold starts. They are maintained for hot starts.

Function block applications

Changing a process value over a set period of time for opening/closing valves, ramping temperature increases for heat processing, etc.

Block diagram

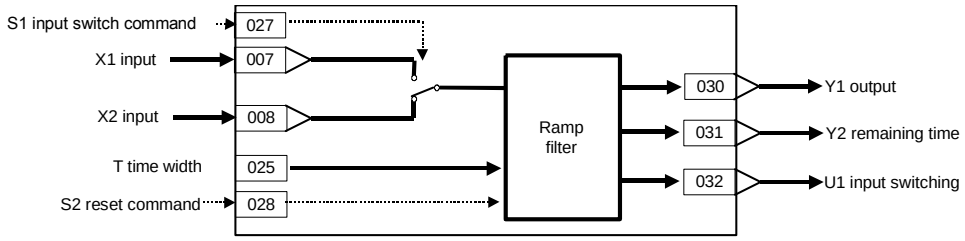

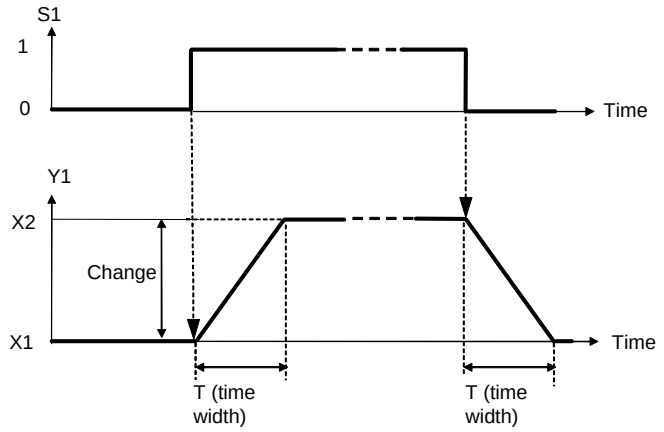

When Input Switch Command S1 changes to 1 (ON), the value of Y1 changes from X1 to X2 over time width T. When Input Switch Command S1 changes to 0 (OFF), the value of Y1 changes from X2 to X1 over time width T. When time width T has lapsed, the value of the selected input is output.
The ramp filter is operating only while input switching U1 is ON.
(The above figure explains the relationship when X2>X1. The relationship when X2<X1 is also possible.)

Note1 .When Reset Command S2 is set to 1 (ON), the value of Y1 will be reset to X2 if Input Switch Command S1 is set to 1 (ON), and to X2 if Input Switch Command S1 is set to 0 (OFF).

Note2: If the Input Switch Command is changed while Output Y1 is changing, the value being output will change to X1 or X2 over time width T.

Note3: If you have changed the time unit (Item 026) while Output Y1 is changing, change Reset Command S2 from 1 (ON) to 0 (OFF).

ITEM list

*1:On the CX-Process Monitor, the R/W mode is indicated in the Tuning screen or in the Control screen.

ITEM TYPE	ITEM	Symbol	Data Description	Data Range	Default	COLD start initialization	R/W Mode R: Read, W: Write, R/W: R/W-enabled, -: R/W-disabled Note: r and r/w: Read and read/write for validate action or monitor run status by CX-Process Tool or Monitor, (S): Initial setting data, (O): Operation data					Data Length (bytes)
							According to CX-Process Tool	According to CX-Process Monitor *1	According to ITEM Setting block	According to Step Ladder Program	Send/ Receive All Blocks	
Contact input	000		Stop block operation command (0: Cancel stop, 1: Stop)	0, 1	0	–	–	R/W	–	–	S/R	1
Parameter	001		Comment	23 characters	Block name	–	R/W(S)	–	–	–	–	24
	002		Block Model: Ramped Switch	167	167	–	R/W(S)	–	–	–	–	2
Special	003		Execution error display 0: Normal, Other: Error (See Appendix “Execution Error Code List.”)		0000	–	r	–	–	–	S	2
Parameter	004		Operation cycle (sec) 0: Common, 1: 0.1, 2: 0.2, 3: 0.5, 4: 1, 5: 2	0 to 5	0	–	R/W(S)	–	–	–	–	2
Analog input connection information	007		X1 source destination BBB: Block address, III: ITEM No. Note: If 000000 is set, the value of ITEM 015 is used as a constant for X1 (fixed value).	BBBIII	000000	–	R/W(S)	–	–	–	–	4
	008		X2 source destination BBB: Block address, III: ITEM No. Note:If 000000 is set, the value of ITEM 016 is used as a constant for X2 (fixed value).	BBBIII	000000	–	R/W(S)	–	–	–	–	4
Analog input	015	X1	Input	±320.00%	0.00	Yes	r	–	–	–	S	2
	016	X2	Input	±320.00%	0.00	Yes	r	–	–	–	S	2
Parameter	025	T	Time width (0: No delay)	0 to 3200.0	0.0	–	R/W(O)	–	W	–	S/R	2
	026	TU	Time unit (0: sec, 1: min, 2: hr)	0 to 2	0	–	R/W(S)	–	W	–	S/R	1
Contact input	027	S1	Input Switch Command (1: Y1= X2 to X1, 0: Y1= X1 to X2)	0, 1	0	Yes	R/W(O)	–	–	R/W	S/R	1
	028	S2	Reset Command When set to 1, if S1 (ITEM 027) =0 Y1 is reset to X1. If S1(ITEM 027) =1, Y1 is reset to X2.	0, 1	0	Yes	R/W(O)	–	–	R/W	S/R	1
Analog output	030	Y1	Output	±320.00%	0.00	Yes	R/W	–	–	–	S	2
	031	Y2	Remaining Time (Time set to 0)	0 to 3200.0	0.0	Yes	r	–	W	–	S	2
Contact output	032	U1	Input switching (ramp filter operating: 1)	0, 1	0	Yes	–	–	–	R	S	1

List of tag ITEMS on SCADA software

The following tag ITEMs are used to specify ITEMs with CSV tags from SCADA software when sending/receiving data to/from the CPU Unit using Receive All Blocks (model 461)/Send All Blocks (model 462). All tag ITEMs are fixed and cannot be changed.

ITEM	Data Name	CSV Tags in SCADA Software
		Tag ITEM (fixed)
000	Stop block operation command	MT_ST
003	Execution error display	ERR
015	X1 input	X1
016	X2 input	X2
025	Time width	T
026	Time unit	TU
027	Input switch command	S1
028	Reset command	S2
030	Y1 output	Y1
031	Remaining time	Y2

Block Model	Block Name	Block Address
<171>	Constant ITEM Setting	100 to 349

Outline

This function block writes the constant data (fixed values) to the specified parameter ITEM in specified function blocks. Constants are written to parameter ITEMs when E1 to E8 send switches or the batch send switch are ON.
Constant data is written within the range -32000 to +32000, and all numbers are expressed as values without any digits past the decimal point. (For example, 100 becomes 1.00 when it is written to an ITEM that is expressed with two digits past the decimal point.)

•In function block ITEM lists, constant data can be written to ITEMs defined as settable (W) by ITEM Setting blocks. Constant data cannot be written to ITEMs defined as non-settable (-).

ITEM	R/W method				Data Length (bytes)
		According to CX-Process Monitor	According to ITEM Setting block	According to Step Ladder Program	
		W	W	–	1

•ITEM002 (Block Model) of the write destination function block cannot be changed.
•Writing is executed for the duration that a send switch is 1 (ON). Send switches are automatically set to 0 (OFF) after writing is completed. For this reason, to execute writing only once, use the differentiated output command (DIFU) of the Step Ladder Program block (Block Model 301) to manipulate the send switches. To repeat execution of writing, use the OUT or SET command to manipulate the send switch.

Block diagram

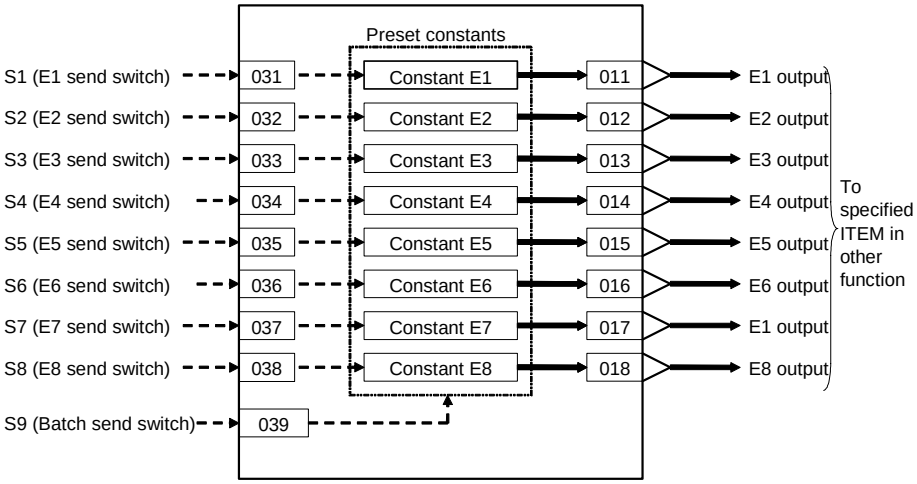

ITEM list

*1:On the CX-Process Monitor, the R/W mode is indicated in the Tuning screen or in the Control screen.

ITEM TYPE	ITEM	Symbol	Data Description	Data Range	Default	COLD start initialization	R/W Mode R: Read, W: Write, R/W: R/W-enabled, -: R/W-disabled Note: r and r/w: Read and read/write for validate action or monitor run status by CX-Process Tool or Monitor, (S): Initial setting data, (O): Operation data					Data Length (bytes)
							According to CX-Process Tool	According to CX-Process Monitor *1	According to ITEM Setting block	According to Step Ladder Program	Send/ Receive All Blocks	
Contact input	000		Stop block operation command (0: Cancel stop, 1: Stop)	0, 1	0	–	–	–	–	–	S/R	1
Parameter	001		Comment	23 characters	Block name	–	R/W(S)	–	–	–	–	24
	002		Block Model: Constant ITEM Setting	171	171	–	R/W(S)	–	–	–	–	2
Special	003		Execution error display 0: Normal, Other: Error (See Appendix "Execution Error Code List.")		0000	–	r	–	–	–	S	2
Parameter	004		Operation cycle (sec) 0: Common, 1: 0.1, 2: 0.2, 3: 0.5, 4: 1, 5: 2	0 to 5	0	–	R/W(S)	–	–	–	–	2
Analog output connection information	011		E1 destination (BBB: Block address, III: ITEM No.)	BBBIII	000000	–	R/W(S)	–	–	–	–	4
	012		E2 destination (BBB: Block address, III: ITEM No.)	BBBIII	000000	–	R/W(S)	–	–	–	–	4
	013		E3 destination (BBB: Block address, III: ITEM No.)	BBBIII	000000	–	R/W(S)	–	–	–	–	4
	014		E4 destination (BBB: Block address, III: ITEM No.)	BBBIII	000000	–	R/W(S)	–	–	–	–	4
	015		E5 destination (BBB: Block address, III: ITEM No.)	BBBIII	000000	–	R/W(S)	–	–	–	–	4
	016		E6 destination (BBB: Block address, III: ITEM No.)	BBBIII	000000	–	R/W(S)	–	–	–	–	4
	017		E7 destination (BBB: Block address, III: ITEM No.)	BBBIII	000000	–	R/W(S)	–	–	–	–	4
	018		E8 destination (BBB: Block address, III: ITEM No.)	BBBIII	000000	–	R/W(S)	–	–	–	–	4
Parameter	021	E1	E1 setting	±32000	0	–	R/W(O)	–	W	–	S/R	2
	022	E2	E2 setting	±32000	0	–	R/W(O)	–	W	–	S/R	2
	023	E3	E3 setting	±32000	0	–	R/W(O)	–	W	–	S/R	2
	024	E4	E4 setting	±32000	0	–	R/W(O)	–	W	–	S/R	2
	025	E5	E5 setting	±32000	0	–	R/W(O)	–	W	–	S/R	2
	026	E6	E6 setting	±32000	0	–	R/W(O)	–	W	–	S/R	2
	027	E7	E7 setting	±32000	0	–	R/W(O)	–	W	–	S/R	2
	028	E8	E8 setting	±32000	0	–	R/W(O)	–	W	–	S/R	2
Contact input	031	S1	E1 send switch --- Send when ON.	0, 1	0	Yes	R/W(O)	–	–	R/W	S/R	2
	032	S2	E2 send switch --- Send when ON.	0, 1	0	Yes	R/W(O)	–	–	R/W	S/R	1
	033	S3	E3 send switch --- Send when ON.	0, 1	0	Yes	R/W(O)	–	–	R/W	S/R	1
	034	S4	E4 send switch --- Send when ON.	0, 1	0	Yes	R/W(O)	–	–	R/W	S/R	1
	035	S5	E5 send switch --- Send when ON.	0, 1	0	Yes	R/W(O)	–	–	R/W	S/R	1
	036	S6	E6 send switch --- Send when ON.	0, 1	0	Yes	R/W(O)	–	–	R/W	S/R	1
	037	S7	E7 send switch --- Send when ON.	0, 1	0	Yes	R/W(O)	–	–	R/W	S/R	1
	038	S8	E8 send switch --- Send when ON.	0, 1	0	Yes	R/W(O)	–	–	R/W	S/R	1
	039	S9	Batch send switch --- Send all when ON.	0, 1	0	Yes	R/W(O)	–	–	R/W	S/R	1

List of tag ITEMs on SCADA software

The following tag ITEMs are used to specify ITEMs with CSV tags from SCADA software when sending/receiving data to/from the CPU Unit using Receive All Blocks (model 461)/Send All Blocks (model 462). All tag ITEMs are fixed and cannot be changed.

ITEM	Data Name	CSV Tags in SCADA Software
		Tag ITEM (fixed)
000	Stop block operation command	MT_ST
003	Execution error display	ERR
021	E1 setting	E1
022	E2 setting	E2
023	E3 setting	E3
024	E4 setting	E4
025	E5 setting	E5
026	E6 setting	E6
027	E7 setting	E7
028	E8 setting	E8
031	E1 send switch	S1
032	E2 send switch	S2
033	E3 send switch	S3
034	E4 send switch	S4
035	E5 send switch	S5
036	E6 send switch	S6
037	E7 send switch	S7
038	E8 send switch	S8
039	Batch send switch	S9

Block Model	Block Name	Block Address
<172>	Variable ITEM Setting	100 to 349

Outline

This function block input analog signals (variables), and writes that variable data (values that change) to the specified parameter ITEM in specified function blocks. Variables are written to parameter ITEMs when E1 to E8 send switches or the batch send switch are ON.
Variable data corresponding to variable data range -3200.00 to +3200.00% is written within the range -32000 to +32000, and all numbers are expressed as values without any digits past the decimal point. (For example, 100 becomes 1.00 when it is written to an ITEM that is expressed with two digits past the decimal point.)

•In function block ITEM lists, analog input (variable) data can be written to ITEMs defined as settable (W) by ITEM Setting blocks. Variable data cannot be written to ITEMs defined as non-settable (-).

ITEM	R/W method				Data Length (bytes)
		According to CX-Process Monitor	According to ITEM Setting block	According to Step Ladder Program	
		W	W	–	1

•ITEM002 (Block Model) of the write destination function block cannot be changed.
•Writing is executed for the duration that a send switch is 1 (ON). Send switches are automatically set to 0 (OFF) after writing is completed. For this reason, to execute writing only once, use the differentiated output command (DIFU) of the Step Ladder Program block (Block Model 301) to manipulate the send switches. To repeat execution of writing, use the OUT or SET command to manipulate the send switches.

Block diagram

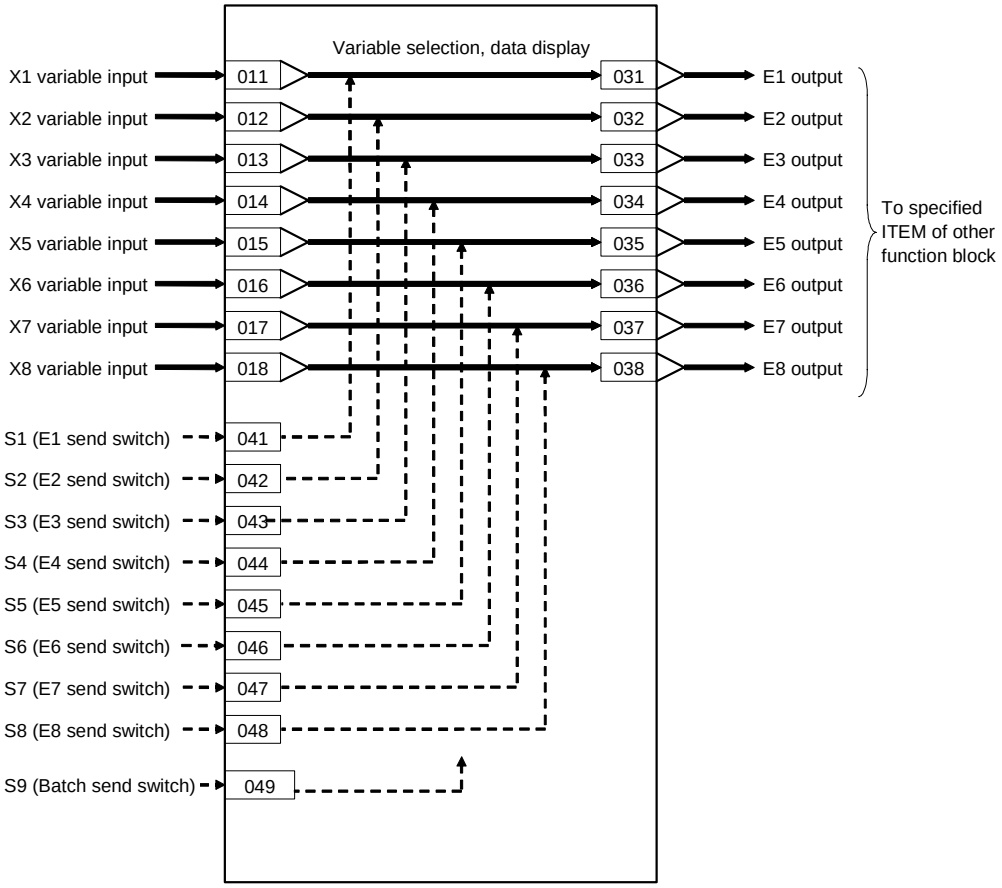

ITEM list

*1:On the CX-Process Monitor, the R/W mode is indicated in the Tuning screen or in the Control screen.

ITEM TYPE	ITEM	Symbol	Data Description	Data Range	Default	COLD start initialization	R/W Mode R: Read, W: Write, R/W: R/W-enabled, -: R/W-disabled Note: r and r/w: Read and read/write for validate action or monitor run status by CX-Process Tool or Monitor, (S): Initial setting data, (O): Operation data					Data Length (bytes)
							According to CX-Process Tool	According to CX-Process Monitor *1	According to ITEM Setting block	According to Step Ladder Program	Send/ Receive All Blocks	
Contact input	000		Stop block operation command (0: Cancel stop, 1: Stop)	0, 1	0	–	–	–	–	–	S/R	1
Parameter	001		Comment	23 characters	Block name	–	R/W(S)	–	–	–	–	24
	002		Block Model: Variable ITEM Setting	172	172	–	R/W(S)	–	–	–	–	2
Special	003		Execution error display 0: Normal, Other: Error (See Appendix "Execution Error Code List.")		0000	–	r	–	–	–	S	2
Parameter	004		Operation cycle (sec) 0: Common, 1: 0.1, 2: 0.2, 3: 0.5, 4: 1, 5: 2	0 to 5	0	–	R/W(S)	–	–	–	–	2
Analog input connection information	011		X1 source designation (BBB: Block address, III: ITEM No.)	BBBIII	000000	–	R/W(S)	–	–	–	–	4
	012		X2 source designation (BBB: Block address, III: ITEM No.)	BBBIII	000000	–	R/W(S)	–	–	–	–	4
	013		X3 source designation (BBB: Block address, III: ITEM No.)	BBBIII	000000	–	R/W(S)	–	–	–	–	4
	014		X4 source designation (BBB: Block address, III: ITEM No.)	BBBIII	000000	–	R/W(S)	–	–	–	–	4
	015		X5 source designation (BBB: Block address, III: ITEM No.)	BBBIII	000000	–	R/W(S)	–	–	–	–	4
	016		X6 source designation (BBB: Block address, III: ITEM No.)	BBBIII	000000	–	R/W(S)	–	–	–	–	4
	017		X7 source designation (BBB: Block address, III: ITEM No.)	BBBIII	000000	–	R/W(S)	–	–	–	–	4
	018		X8 source designation (BBB: Block address, III: ITEM No.)	BBBIII	000000	–	R/W(S)	–	–	–	–	4
Analog input	021	X1	Input	±320.00%	0.00	Yes	r	–	–	–	S	2
	022	X2	Input	±320.00%	0.00	Yes	r	–	–	–	S	2
	023	X3	Input	±320.00%	0.00	Yes	r	–	–	–	S	2
	024	X4	Input	±320.00%	0.00	Yes	r	–	–	–	S	2
	025	X5	Input	±320.00%	0.00	Yes	r	–	–	–	S	2
	026	X6	Input	±320.00%	0.00	Yes	r	–	–	–	S	2
	027	X7	Input	±320.00%	0.00	Yes	r	–	–	–	S	2
	028	X8	Input	±320.00%	0.00	Yes	r	–	–	–	S	2
Analog output connection information	031		E1 destination designation (BBB: Block address, III: ITEM No.)	BBBIII	000000	–	R/W(S)	–	–	–	–	4
	032		E2 destination designation (BBB: Block address, III: ITEM No.	BBBIII	000000	–	R/W(S)	–	–	–	–	4
	033		E3 destination designation (BBB: Block address, III: ITEM No.	BBBIII	000000	–	R/W(S)	–	–	–	–	4
	034		E4 destination designation (BBB: Block address, III: ITEM No.	BBBIII	000000	–	R/W(S)	–	–	–	–	4
	035		E5 destination designation (BBB: Block address, III: ITEM No.	BBBIII	000000	–	R/W(S)	–	–	–	–	4
	036		E6 destination designation (BBB: Block address, III: ITEM No.(no connection allowed)	BBBIII	000000	–	R/W(S)	–	–	–	–	4
	037		E7 destination designation (BBB: Block address, III: ITEM No.	BBBIII	000000	–	R/W(S)	–	–	–	–	4
	038		E8 destination designation (BBB: Block address, III: ITEM No.	BBBIII	000000	–	R/W(S)	–	–	–	–	4
Contact input	041	S1	E1 send switch --- Send when ON.	0, 1	0	Yes	R/W(O)	–	–	R/W	S/R	1
	042	S2	E2 send switch --- Send when ON.	0, 1	0	Yes	R/W(O)	–	–	R/W	S/R	1
	043	S3	E3 send switch --- Send when ON.	0, 1	0	Yes	R/W(O)	–	–	R/W	S/R	1
	044	S4	E4 send switch --- Send when ON.	0, 1	0	Yes	R/W(O)	–	–	R/W	S/R	1
	045	S5	E5 send switch --- Send when ON.	0, 1	0	Yes	R/W(O)	–	–	R/W	S/R	1
	046	S6	E6 send switch --- Send when ON.	0, 1	0	Yes	R/W(O)	–	–	R/W	S/R	1
	047	S7	E7 send switch --- Send when ON.	0, 1	0	Yes	R/W(O)	–	–	R/W	S/R	1
	048	S8	E8 send switch --- Send when ON.	0, 1	0	Yes	R/W(O)	–	–	R/W	S/R	1
	049	S9	Batch send switch --- Send all when ON.	0, 1	0	Yes	R/W(O)	–	–	R/W	S/R	1

Note Bumpless output of MV functions when PID constants are changed in the Basic PID block (Block Model 011) and Advanced PID block (Block Model 012).
For this reason, MV is no longer updated and PID control is not executed correctly if variables are written to PID constants at each operation cycle by the Variable ITEM Setting block (Block Model 172).
If this happens, use the Step Ladder Program block (Block Model 301) to provide a time interval for writing by the ITEM Setting block.

List of tag ITEMs on SCADA software

The following tag ITEMs are used to specify ITEMs with CSV tags from SCADA software when sending/receiving data to/from the CPU Unit using Receive All Blocks (model 461)/Send All Blocks (model 462). All tag ITEMs are fixed and cannot be changed.

ITEM	Data Name	CSV Tags in SCADA Software
		Tag ITEM (fixed)
000	Stop block operation command	MT_ST
003	Execution error display	ERR
021	X1 input	X1
022	X2 input	X2
023	X3 input	X3
024	X4 input	X4
025	X5 input	X5
026	X6 input	X6
027	X7 input	X7
028	X8 input	X8
041	E1 send switch	S1
042	E2 send switch	S2
043	E3 send switch	S3
044	E4 send switch	S4
045	E5 send switch	S5
046	E6 send switch	S6
047	E7 send switch	S7
048	E8 send switch	S8
049	Batch send switch	S9

Block Model	Block Name	Block Address
<174>	Batch Data Collector	100 to 349

Outline

This function block holds up to eight analog inputs in buffer according to a certain timing within sequence processing.
After batch processing ends, the data held in buffer ITEMs are read by the CPU Unit or CX-Process Monitor for use.

Note: To read the data on CX-Process Monitor, use the AO Terminal to Expanded CPU Unit block (Block Model 458) to temporarily store the data held in buffer ITEMs to the CPU Unit I/O Memory and then read the data.

Function block applications

Collection of data at the timing of sequence processing to create a ledger at a batch processing plant

Example Collect temperature data and level data to create a batch report after raw materials have been poured into a tank.

Block diagram

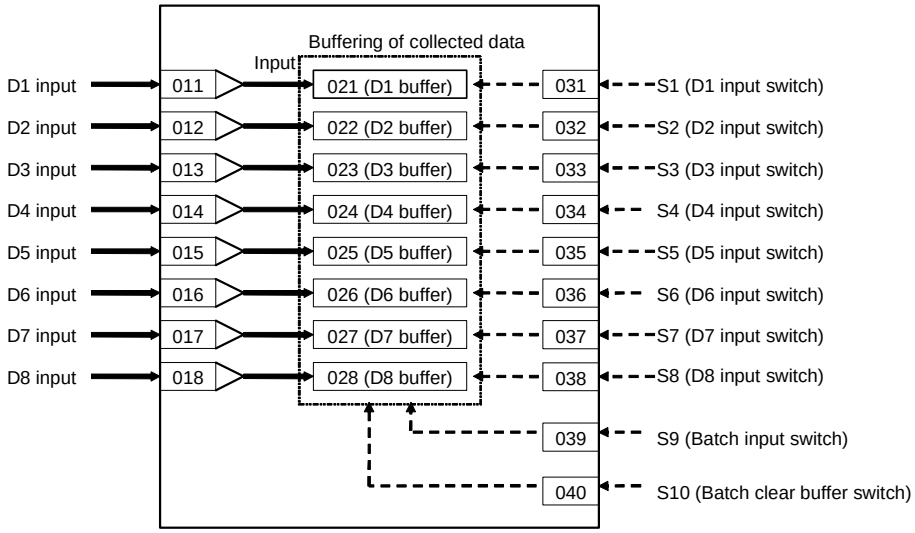

When the state of S1 to S8 input switches changes from 0 to 1, each of D1 to D8 inputs are held in ITEM021 to ITEM028 (hold data in buffer). After data has been loaded, S1 to S8 input switches are automatically reset to 0.
When the state of S9 batch input switch changes from 0 to 1, all of D1 to D8 inputs are held in ITEM021 to ITEM028 (hold data in buffer). After data has been loaded, S1 to S8 input switches are automatically reset to 0.
When the state of S10 batch clear buffer switch changes from 0 to 1, all of the data held in ITEM021 to ITEM028 (hold data in buffer) is cleared. After all buffers are cleared, S10 batch clear buffer switch is automatically reset to 0.

ITEM list

*1:On the CX-Process Monitor, the R/W mode is indicated in the Tuning screen or in the Control screen.

ITEM TYPE	ITEM	Symbol	Data Description	Data Range	Default	COLD start initialization	R/W Mode R: Read, W: Write, R/W: R/W-enabled, -: R/W-disabled Note: r and r/w: Read and read/write for validate action or monitor run status by CX-Process Tool or Monitor, (S): Initial setting data, (O): Operation data					Data Length (bytes)
							According to CX-Process Tool	According to CX-Process Monitor *1	According to ITEM Setting block	According to Step Ladder Program	Send/ Receive All Blocks	
Contact input	000		Stop block operation command (0: Cancel stop, 1: Stop)	0, 1	0	–	–	–	–	–	S/R	1
Parameter	001		Comment	23 characters	Block name	–	R/W(S)	–	–	–	–	24
	002		Block Model: Batch Data Collector	174	174	–	R/W(S)	–	–	–	–	2
Special	003		Execution error display 0: Normal, Other: Error (See Appendix "Execution Error Code List.")		0000	–	r	–	–	–	S	2
Parameter	004		Operation cycle (sec) 0: Common, 1: 0.1, 2: 0.2, 3: 0.5, 4: 1, 5: 2	0 to 5	0	–	R/W(S)	–	–	–	–	2
Analog input wiring information	011		D1 source designation (BBB: Block address, III: ITEM No.)	BBBIII	000000	–	R/W(S)	–	–	–	–	4
	012		D2 source designation (BBB: Block address, III: ITEM No.)	BBBIII	000000	–	R/W(S)	–	–	–	–	4
	013		D3 source designation (BBB: Block address, III: ITEM No.)	BBBIII	000000	–	R/W(S)	–	–	–	–	4
	014		D4 source designation (BBB: Block address, III: ITEM No.)	BBBIII	000000	–	R/W(S)	–	–	–	–	4
	015		D5 source designation (BBB: Block address, III: ITEM No.)	BBBIII	000000	–	R/W(S)	–	–	–	–	4
	016		D6 source designation (BBB: Block address, III: ITEM No.)	BBBIII	000000	–	R/W(S)	–	–	–	–	4
	017		D7 source designation (BBB: Block address, III: ITEM No.)	BBBIII	000000	–	R/W(S)	–	–	–	–	4
	018		D8 source designation (BBB: Block address, III: ITEM No.)	BBBIII	000000	–	R/W(S)	–	–	–	–	4
Analog input	021	D1	D1 input (hold data in buffer)	±320.00%	0.00	Yes	r	–	–	–	S	2
	022	D2	D2 input (hold data in buffer)	±320.00%	0.00	Yes	r	–	–	–	S	2
	023	D3	D3 input (hold data in buffer)	±320.00%	0.00	Yes	r	–	–	–	S	2
	024	D4	D4 input (hold data in buffer)	±320.00%	0.00	Yes	r	–	–	–	S	2
	025	D5	D5 input (hold data in buffer)	±320.00%	0.00	Yes	r	–	–	–	S	2
	026	D6	D6 input (hold data in buffer)	±320.00%	0.00	Yes	r	–	–	–	S	2
	027	D7	D7 input (hold data in buffer)	±320.00%	0.00	Yes	r	–	–	–	S	2
	028	D8	D8 input (hold data in buffer)	±320.00%	0.00	Yes	r	–	–	–	S	2
Contact input	031	S1	D1 input switch --- Data input when setting changes from 0 to 1.	0, 1	0	Yes	R/W(O)	–	–	R/W	S/R	1
	032	S2	D2 input switch --- Data input when setting changes from 0 to 1.	0, 1	0	Yes	R/W(O)	–	–	R/W	S/R	1
	033	S3	D3 input switch --- Data input when setting changes from 0 to 1.	0, 1	0	Yes	R/W(O)	–	–	R/W	S/R	1
	034	S4	D4 input switch --- Data input when setting changes from 0 to 1.	0, 1	0	Yes	R/W(O)	–	–	R/W	S/R	1
	035	S5	D5 input switch --- Data input when setting changes from 0 to 1.	0, 1	0	Yes	R/W(O)	–	–	R/W	S/R	1
	036	S6	D6 input switch --- Data input when setting changes from 0 to 1.	0, 1	0	Yes	R/W(O)	–	–	R/W	S/R	1
	037	S7	D7 input switch --- Data input when setting changes from 0 to 1.	0, 1	0	Yes	R/W(O)	–	–	R/W	S/R	1
	038	S8	D8 input switch --- Data input when setting changes from 0 to 1.	0, 1	0	Yes	R/W(O)	–	–	R/W	S/R	1
	039	S9	Batch input switch --- Data of D1 to D8 is batch-input when setting changes from 0 to 1.	0, 1	0	Yes	R/W(O)	–	–	R/W	S/R	1
	040	S10	Batch clear buffer switch --- Contents (held values) of D1 to D8 buffers area batch-cleared when switch state changes from 0 to 1.	0, 1	0	Yes	R/W(O)	–	–	R/W	S/R	1

List of tag ITEMs on SCADA software

The following tag ITEMs are used to specify ITEMs with CSV tags from SCADA software when sending/receiving data to/from the CPU Unit using Receive All Blocks (model 461)/Send All Blocks (model 462). All tag ITEMs are fixed and cannot be changed.

ITEM	Data Name	CSV Tags in SCADA Software
		Tag ITEM (fixed)
000	Stop block operation command	MT_ST
003	Execution error display	ERR
021	D1 input	D1
022	D2 input	D2
023	D3 input	D3
024	D4 input	D4
025	D5 input	D5
026	D6 input	D6
027	D7 input	D7
028	D8 input	D8
031	D1 input switch	S1
032	D2 input switch	S2
033	D3 input switch	S3
034	D4 input switch	S4
035	D5 input switch	S5
036	D6 input switch	S6
037	D7 input switch	S7
038	D8 input switch	S8
039	Batch input switch	S9
040	Batch clear buffer switch	S10

Block Model	Block Name	Block Address
<182>	Accumulated Value Input Adder	100 to 349

Outline

This function block adds up to four accumulated value signals (0000 to 9999 repeat signals).

•Digit shift can be set to each of the accumulated value inputs.
•The results of addition are output as accumulated values (eight digits) and instantaneous values.
•When S1 counter reset switch is set to 1 (ON), the accumulated value count is returned to 0 (zero).
•All count operations are stopped by the S2 interrupt switch.

Note: When a cold start is performed, the accumulated values of the operation results that were held before output OFF or before running was stopped are cleared from memory. These values are held when a hot start is performed.

Function block applications

Calculation of the total flowrate accumulated values of various fluids

Block diagram

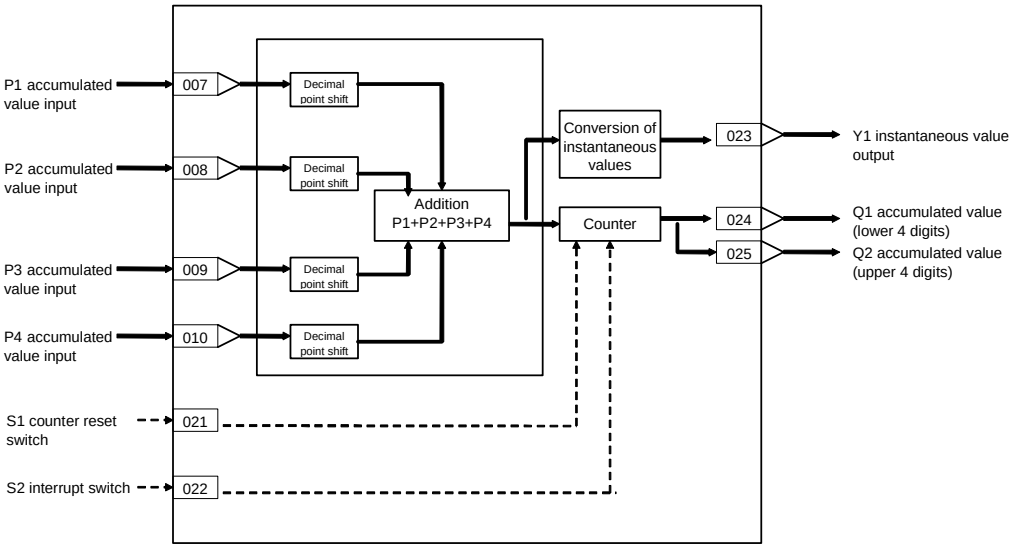

ITEM list

*1:On the CX-Process Monitor, the R/W mode is indicated in the Tuning screen or in the Control screen.

ITEM TYPE	ITEM	Symbol	Data Description	Data Range	Default	COLD start initialization	R/W Mode R: Read, W: Write, R/W: R/W-enabled, -: R/W-disabled Note: r and r/w: Read and read/write for validate action or monitor run status by CX-Process Tool or Monitor, (S): Initial setting data, (O): Operation data					Data Length (bytes)
							According to CX-Process Tool	According to CX-Process Monitor *1	According to ITEM Setting block	According to Step Ladder Program	Send/ Receive All Blocks	
Contact input	000		Stop block operation command (0: Cancel stop, 1: Stop)	0, 1	0	–	–	–	–	–	S/R	1
Parameter	001		Comment	23 characters	Block name	–	R/W(S)	–	–	–	–	24
	002		Block Model: Accumulated Value Input Adder	182	182	–	R/W(S)	–	–	–	–	2
Special	003		Execution error display 0: Normal, Other: Error (See Appendix "Execution Error Code List.")		0000	–	r	–	–	–	–	2
Parameter	004		Operation cycle (sec) 0: Common, 1: 0.1, 2: 0.2, 3: 0.5, 4: 1, 5: 2	0 to 5	0	–	R/W(S)	–	–	–	–	2
Accumulated value input connection information	007		P1 source designation BBB: Block address, III: ITEM No.	BBBIII	000000	–	R/W(S)	–	–	–	–	4
	008		P2 source designation BBB: Block address, III: ITEM No.	BBBIII	000000	–	R/W(S)	–	–	–	–	4
	009		P3 source designation BBB: Block address, III: ITEM No.	BBBIII	000000	–	R/W(S)	–	–	–	–	4
	010		P4 source designation BBB: Block address, III: ITEM No.	BBBIII	000000	–	R/W(S)	–	–	–	–	4
Accumulated value input	011	P1	Input	0 to 9999	0	Yes	r	–	–	–	S	2
	012	P2	Input	0 to 9999	0	Yes	r	–	–	–	S	2
	013	P3	Input	0 to 9999	0	Yes	r	–	–	–	S	2
	014	P4	Input	0 to 9999	0	Yes	r	–	–	–	S	2
Parameter	015		P1 decimal point shift (10x, -3: x0.001, -2: x0.01, -1: x0.1, 0: x1, 1: x10) Note 1	-3 to +1	0	–	R/W(S)	–	–	–	–	1
	016		P2 decimal point shift (same as above)	-3 to +1	0	–	R/W(S)	–	–	–	–	1
	017		P3 decimal point shift (same as above)	-3 to +1	0	–	R/W(S)	–	–	–	–	1
	018		P4 decimal point shift (same as above)	-3 to +1	0	–	R/W(S)	–	–	–	–	1
	019		Instantaneous value conversion parameter (The number of pulses per second at instantaneous value output 100% is set.)	0 to 99999.9999	1000.0000	–	R/W(S)	–	–	–	–	4
	020		Sample number for moving average in instantaneous value conversion	1 to 16	16	–	R/W(S)	–	–	–	S/R	1
Contact input	021	S1	Counter reset switch (1: Reset)	0, 1	0	Yes	R/W(O)	–	–	–	S/R	1
	022	S2	Interrupt switch (1: Interrupt)	0, 1	0	Yes	R/W(O)	–	–	–	S/R	1
Analog output	023	Y1	Instantaneous value output	0 to 320.00%	0.00	Yes	r/w	–	–	–	S	2
Accumulated value output	024	Q1	Accumulated value (lower 4 digits)	0000 to 9999	0	Yes	r/w	–	–	–	S	2
	025	Q2	Accumulated value (upper 4 digits)	0000 to 9999	0	Yes	r/w	–	–	–	S	2

Note: When decimal point shift is set to -3 to -1, only integer pulses are used for instantaneous value calculation. Digits past the decimal point are added to the next calculation.

List of tag ITEMs on SCADA software

The following tag ITEMs are used to specify ITEMs with CSV tags from SCADA software when sending/receiving data to/from the CPU Unit using Receive All Blocks (model 461)/Send All Blocks (model 462). All tag ITEMs are fixed and cannot be changed.

ITEM	Data Name	CSV Tags in SCADA Software
		Tag ITEM (fixed)
000	Stop block operation command	MT_ST
003	Execution error display	ERR
011	P1 input	P1
012	P2 input	P2
013	P3 input	P3
014	P4 input	P4
020	Sample number for moving average in instantaneous value conversion	N
021	Counter reset switch	S1
022	Interrupt switch	S2
023	Instantaneous value output	Y1
024	Accumulated value (lower 4 digits)	Q1
025	Accumulated value (upper 4 digits)	Q2

Block Model	Block Name	Block Address
<183>	Accumulated Value Analog Multiplier	100 to 349

Outline

This function block multiplies analog signals by one set of accumulated value signals (0000 to 9999 repeat signals).

•Digit shift can be set to each of the accumulated value inputs.
•The results of multiplication are output as accumulated values (eight digits) and instantaneous values.
•When S1 counter reset switch is set to 1 (ON). the accumulated value count is returned to 0 (zero).
•All count operations are stopped by the S2 interrupt switch.

Note: When a cold start is performed, the accumulated values of the operation results that were held before output OFF or before running was stopped are cleared from memory. These values are held when a hot start is performed.

Block diagram

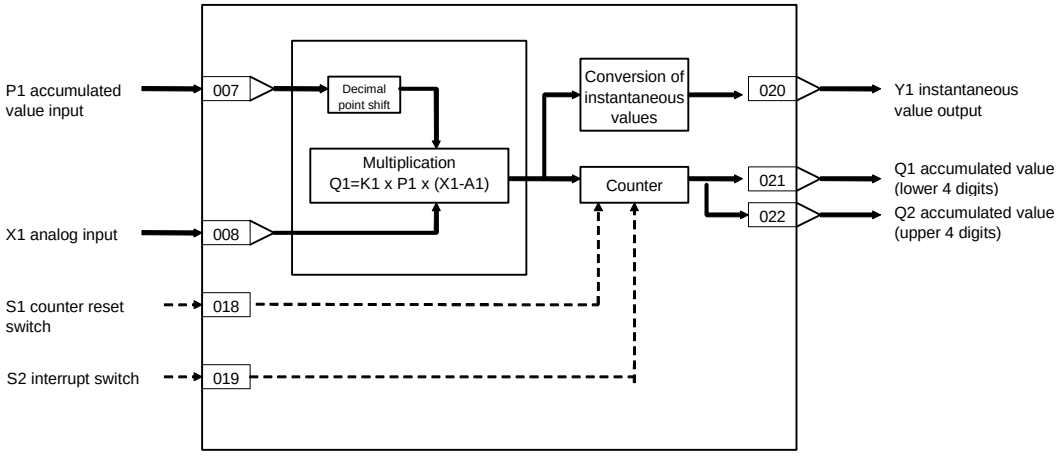

ITEM list

*1:On the CX-Process Monitor, the R/W mode is indicated in the Tuning screen or in the Control screen.

ITEM TYPE	ITEM	Symbol	Data Description	Data Range	Default	COLD start initialization	R/W Mode R: Read, W: Write, R/W: R/W-enabled, -: R/W-disabled Note: r and r/w: Read and read/write for validate action or monitor run status by CX-Process Tool or Monitor, (S): Initial setting data, (O): Operation data					Data Length (bytes)
							According to CX-Process Tool	According to CX-Process Monitor *1	According to ITEM Setting block	According to Step Ladder Program	Send/ Receive All Blocks	
Contact input	000		Stop block operation command (0: Cancel stop, 1: Stop)	0, 1	0	–	–	–	–	–	S/R	1
Parameter	001		Comment	23 characters	Block name	–	R/W(S)	–	–	–	–	24
	002		Block Model: Accumulated Value Analog Multiplier	183	183	–	R/W(S)	–	–	–	–	2
Special	003		Execution error display 0: Normal, Other: Error (See Appendix "Execution Error Code List.")		0000	–	r	–	–	–	S	2
Parameter	004		Operation cycle (sec) 0: Common, 1: 0.1, 2: 0.2, 3: 0.5, 4: 1, 5: 2	0 to 5	0	–	R/W(S)	–	–	–	–	2
Accumu-lated value input connection information	007		P1 source designation BBB: Block address, III: ITEM No.	BBBIII	000000	–	R/W(S)	–	–	–	–	4
Analog input connection information	008		X1 source designation BBB: Block address, III: ITEM No.	BBBIII	000000	–	R/W(S)	–	–	–	–	4
Accumu-lated value input	011	P1	Input	0 to 9999	0	Yes	r	–	–	–	S	2
Analog input	012	X1	Input	±320.00%	0.00	Yes	r	–	–	–	S	2
Parameter	013		Decimal point shift (10x, –3: x0.001, –2: x0.01, –1: x0.1, 0: x1, 1: x10) Note 1	–3 to +1	0	–	R/W(S)	–	–	–	–	1
	014	K1	Gain	±10.000	1.000	–	R/W(O)	–	–	–	S/R	2
	015	A1	Bias	±320.00%	0.00	–	R/W(O)	–	–	–	S/R	2
	016		Instantaneous value conversion parameter (The number of pulses per second at instantaneous value output 100% is set.)	0 to 99999.9999	1000.0000	–	R/W(S)	–	–	–	–	4
	017		Sample number for moving average in instantaneous value conversion	1 to 16	16	–	R/W(S)	–	–	–	S/R	1
Contact input	018	S1	Counter reset switch (1: Reset)	0, 1	0	Yes	R/W(O)	–	–	R/W	S/R	1
	019	S2	Interrupt switch (1: Interrupt)	0, 1	0	Yes	R/W(O)	–	–	R/W	S/R	1
Analog output	020	Y1	Instantaneous value output	0 to 320.00%	0.00	Yes	r/w	–	–	–	S	2
Accumu-lated value output	021	Q1	Accumulated value (lower 4 digits)	0000 to 9999	0	Yes	r/w	–	–	–	S	2
	022	Q2	Accumulated value (upper 4 digits)	0000 to 9999	0	Yes	r/w	–	–	–	S	2

Note1: The multiplication formula is Q1=K1xP1x(X1-A1). Each of the values of Q1, K1 and P1 are the ranges indicated in the ITEM List above. Note, however, that X1 and A1 are calculated with 100%=1.0, and the data ranges for each are -3.2 to +3.2.

Note2: If the result of multiplication is a minus value, the result is taken to be 0 (zero).

Note3: When decimal point shift is set to -3 to -1, only integer pulses are used for instantaneous value calculation. Digits past the decimal point are added to the next calculation.

List of tag ITEMs on SCADA software

The following tag ITEMs are used to specify ITEMs with CSV tags from SCADA software when sending/receiving data to/from the CPU Unit using Receive All Blocks (model 461)/Send All Blocks (model 462). All tag ITEMs are fixed and cannot be changed.

ITEM	Data Name	CSV Tags in SCADA Software
		Tag ITEM (fixed)
000	Stop block operation command	MT_ST
003	Execution error display	ERR
011	P1 input	P1
012	X1 input	X1
014	Gain	K1
015	Bias	A1
017	Sample number for moving average in instantaneous value conversion	N
018	Counter reset switch	S1
019	Interrupt switch	S2
020	Instantaneous value output	Y1
021	Accumulated value (lower 4 digits)	Q1
022	Accumulated value (upper 4 digits)	Q2

Block Model	Block Name	Block Address
<184>	Accumulator for accumulated value input	100 to 349

Outline

This function block continuously accumulates 4-digit accumulated value signals (repeated signals within 0000 to 9999 range), and converts them to eight digits. This function block can also be used for batch control.

•Accumulated values are divided into upper four digits and lower four digits before they are output. If necessary, join these two sets of digits together for display on a host computer.
•When Qn accumulated value output is used as analog input for other function blocks, the count 9999 is processed as 99.99%.
•When S1 reset switch is set to 1 (ON), the accumulated values are returned to count 0.
•When S3 batch controller reset switch is input, Q3 batch accumulated value becomes count 0, and U1 arrival at preset value is reset to 0 (OFF).
•S2 interrupt switch stops all count operations.
•Minus inputs are regarded as 0% input.

Note: When a cold start is performed, the values that were held before output OFF or before running was stopped are cleared from memory. These values are held when a hot start is performed.

Function block applications

•Input of accumulated values 0000 to 9999 from Pulse Input Unit (CS1W-PPS01: Block Model 562) as P1 accumulated value input
•Input of accumulated values 0000 to 9999 from Contact input/Accumulated value output block (Block Model 185) as P1 accumulated value input

Block diagram

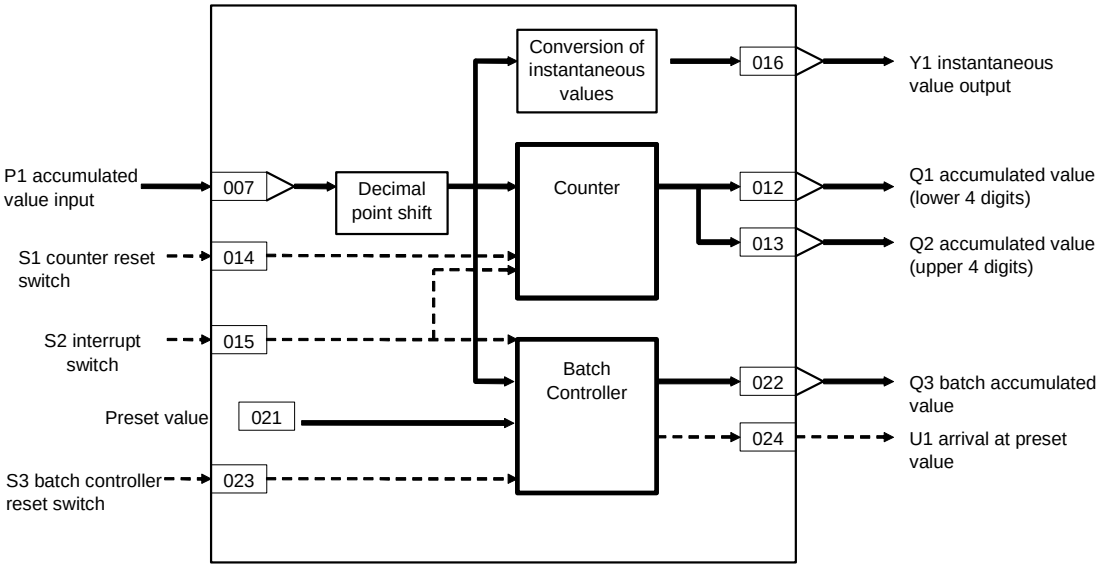

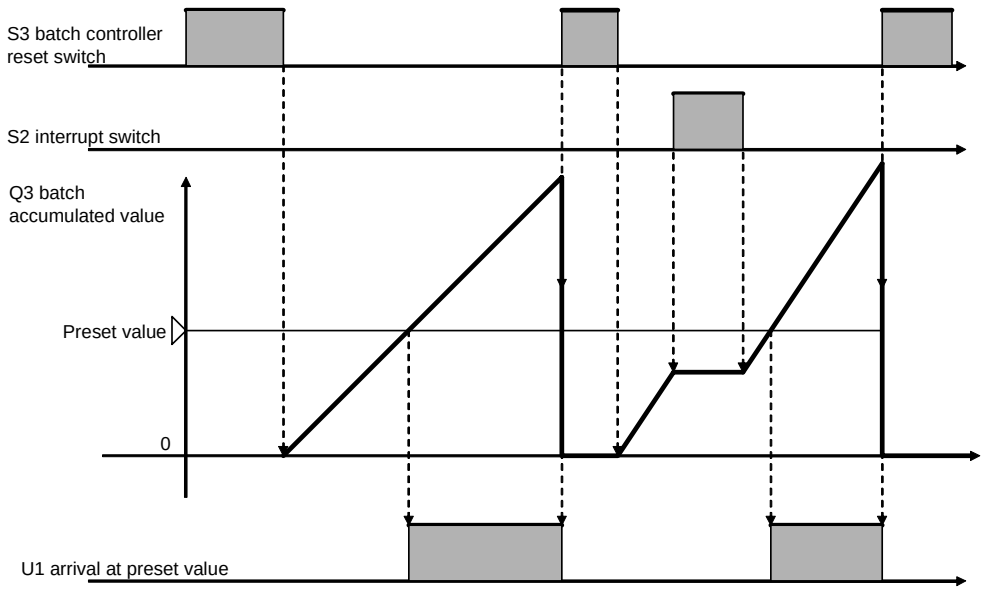

ITEM list

*1:On the CX-Process Monitor, the R/W mode is indicated in the Tuning screen or in the Control screen.

ITEM TYPE	ITEM	Symbol	Data Description	Data Range	Default	COLD start initialization	R/W Mode R: Read, W: Write, R/W: R/W-enabled, -: R/W-disabled Note: r and r/w: Read and read/write for validate action or monitor run status by CX-Process Tool or Monitor, (S): Initial setting data, (O): Operation data					Data Length (bytes)
							According to CX-Process Tool	According to CX-Process Monitor *1	According to ITEM Setting block	According to Step Ladder Program	Send/ Receive All Blocks	
Contact input	000		Stop block operation command (0: Cancel stop, 1: Stop)	0, 1	0	–	–	–	–	–	S/R	1
Parameter	001		Comment	23 characters	Block name	–	R/W(S)	–	–	–	–	24
	002		Block Model: Accumulator for accumulated value input	184	184	–	R/W(S)	–	–	–	–	2
Special	003		Execution error display 0: Normal, Other: Error (See Appendix "Execution Error Code List.")		0000	–	r	–	–	–	S	2
Parameter	004		Operation cycle (sec) 0: Common, 1: 0.1, 2: 0.2, 3: 0.5, 4: 1, 5: 2	0 to 5	0	–	R/W(S)	–	–	–	–	2

Accumulated value input P1

*1:On the CX-Process Monitor, the R/W mode is indicated in the Tuning screen or in the Control screen.

ITEM TYPE	ITEM	Symbol	Data Description	Data Range	Default	COLD start initialization	R/W Mode R: Read, W: Write, R/W: R/W-enabled, -: R/W-disabled Note: r and r/w: Read and read/write for validate action or monitor run status by CX-Process Tool or Monitor, (S): Initial setting data, (O): Operation data					Data Length (bytes)
							According to CX-Process Tool	According to CX-Process Monitor *1	According to ITEM Setting block	According to Step Ladder Program	Send/ Receive All Blocks	
Accumulated value input connection information	007		P1 source designation BBB: Block address, III: ITEM No.	BBBIII	000000	–	R/W(S)	–	–	–	–	4
Accumu-lated value input	008	P1	Input	0 to 9999	0	Yes	r	–	–	–	S	2
Parameter	009		Decimal point shift (10x, -3: x0.001, -2: x0.01, -1: x0.1, 0: x1, 1: x10) Note 1	-3 to +1	0	–	R/W(S)	–	–	–	–	1
	010		Instantaneous value conversion parameter (The number of pulses per second at instantaneous value output 100% is set.)	0 to 99999.9999	1000.0000	–	R/W(S)	–	–	–	–	4
	011		Sample number for moving average in instantaneous value conversion	1 to 16	16	–	R/W(S)	–	–	–	–	1
Accumu-lated value output	012	Q1	Accumulated value (lower 4 digits)	0000 to 9999	0	Yes	r/w	–	W	–	S	2
	013	Q2	Accumulated value (upper 4 digits)	0000 to 9999	0	Yes	r/w	–	W	–	S	2
Contact input	014	S1	Counter reset switch (1: Reset)	0, 1	0	Yes	R/W(O)	–	–	R/W	S/R	1
	015	S2	Interrupt switch (1: Interrupt)	0, 1	0	Yes	R/W(O)	–	–	R/W	S/R	1
Analog output	016	Y1	Instantaneous value output	0 to 320.00%	0.00	Yes	r/w	–	–	–	S	2

Batch controller

*1:On the CX-Process Monitor, the R/W mode is indicated in the Tuning screen or in the Control screen.

ITEM TYPE	ITEM	Symbol	Data Description	Data Range	Default	COLD start initialization	R/W Mode R: Read, W: Write, R/W: R/W-enabled, -: R/W-disabled Note: r and r/w: Read and read/write for validate action or monitor run status by CX-Process Tool or Monitor, (S): Initial setting data, (O): Operation data					Data Length (bytes)
							According to CX-Process Tool	According to CX-Process Monitor *1	According to ITEM Setting block	According to Step Ladder Program	Send/ Receive All Blocks	
Parameter	021		Preset value	0000 to 9999	9999	–	R/W(O)	–	W	–	S/R	2
Accumu-lated value output	022	Q3	Batch accumulated value	0000 to 9999	0	Yes	r/w	–	W	–	S	2
Contact input	023	S3	Batch controller reset switch (1: Reset)	0, 1	0	Yes	R/W(O)	–	–	R/W	S/R	1
Contact output	024	U1	Arrival at preset value	0, 1	0	Yes	–	–	–	R	S	1

Note: When decimal point shift is set to -3 to -1, only integer pulses are used for instantaneous value calculation. Digits past the decimal point are added to the next calculation.

List of tag ITEMs on SCADA software

The following tag ITEMs are used to specify ITEMs with CSV tags from SCADA software when sending/receiving data to/from the CPU Unit using Receive All Blocks (model 461)/Send All Blocks (model 462). All tag ITEMs are fixed and cannot be changed.

ITEM	Data Name	CSV Tags in SCADA Software
		Tag ITEM (fixed)
000	Stop block operation command	MT_ST
003	Execution error display	ERR
008	P1 input	P1
012	Accumulated value (lower 4 digits)	Q1
013	Accumulated value (upper 4 digits)	Q2
014	Counter reset switch	S1
015	Interrupt switch	S2
016	Instantaneous value output	Y1
021	Preset value	BM
022	Batch accumulated value	Q3
023	Batch controller reset switch	S3
024	Arrival at preset value	U1

Block Model	Block Name	Block Address
<185>	Contact Input/ Accumulated Value Output	100 to 349

Outline

This function block counts the rising edges of contact inputs (low-speed pulses) to output accumulated value signals.

- This function block is used when the Contact Input Unit is used instead of the Pulse Input Unit to accumulate low-speed pulse train signals.
- Assign contact inputs in the Contact Distributor block (Block Model 201) or Step Ladder Program block (Block Model 301).
- Counting is not performed after the contact input signal is set to 1 (ON) unless it is temporarily set to 0 (OFF). For this reason, thoroughly check the relationship between operation cycle and pulse rate before use.

Note1: When the contact signals input from the Basic Input Unit are taken as the input, the operation cycle of DI Terminal blocks can be used only when accumulating low-speed pulse inputs as the cycle is 0.1 to 2 seconds. The operation cycle of DI Terminal blocks cannot be used for accumulating high-speed pulses from flowrate meters, for example.
Note2: Set the operation cycle of ITEM004 to a value shorter than the contact input.
Note3: When a cold start is performed, the values that were held before CPU Unit output turned OFF or before running of the Loop Control Unit was stopped are cleared from memory. These values are held when a hot start is performed.

Function block applications

Input and accumulation of low-speed pulses such as power
Output of accumulated values to the Accumulator for accumulated value input block (Block Model 184) for conversion to eight digits when accumulated values must be expressed up to eight digits

Block diagram

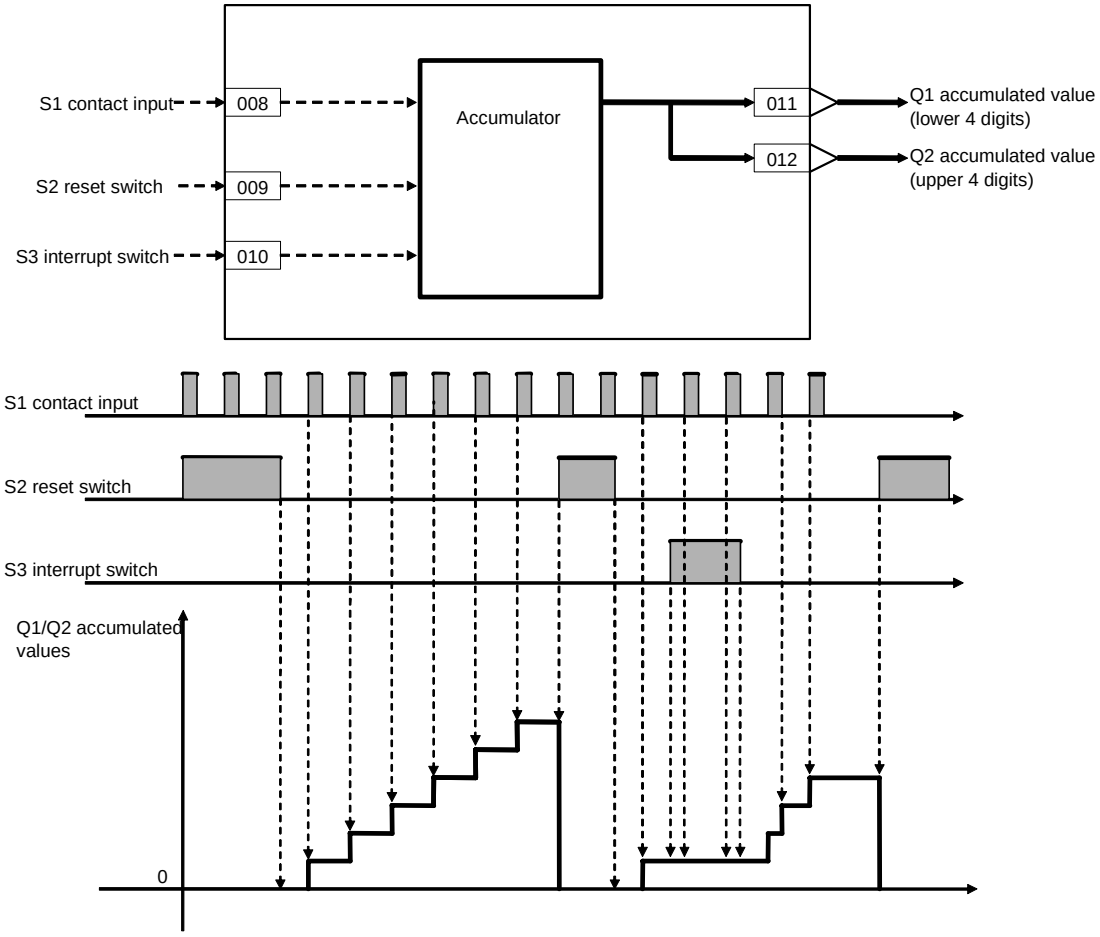

ITEM list

*1:On the CX-Process Monitor, the R/W mode is indicated in the Tuning screen or in the Control screen.

ITEM TYPE	ITEM	Symbol	Data Description	Data Range	Default	COLD start initialization	R/W Mode R: Read, W: Write, R/W: R/W-enabled, -: R/W-disabled Note: r and r/w: Read and read/write for validate action or monitor run status by CX-Process Tool or Monitor, (S): Initial setting data, (O): Operation data					Data Length (bytes)
							According to CX-Process Tool	According to CX-Process Monitor *1	According to ITEM Setting block	According to Step Ladder Program	Send/ Receive All Blocks	
Contact input	000		Stop block operation command (0: Cancel stop, 1: Stop)	0, 1	0	–	–	–	–	–	S/R	1
Parameter	001		Comment	23 characters	Block name	–	R/W(S)	–	–	–	–	24
	002		Block Model: Contact Input/Accumulated Value Output	185	185	–	R/W(S)	–	–	–	–	2
Special	003		Execution error display 0: Normal, Other: Error (See Appendix "Execution Error Code List.")		0000	–	r	–	–	–	S	2
Parameter	004		Operation cycle (sec) 0: Common, 1: 0.1, 2: 0.2, 3: 0.5, 4: 1, 5: 2	0 to 5	0	–	R/W(S)	–	–	–	–	2
Contact input	008	S1	Contact input	0, 1	0	Yes	–	–	–	R/W	S/R	1
	009	S2	Reset switch (1: Reset)	0, 1	0	Yes	R/W(O)	–	–	R/W	S/R	1
	010	S3	Interrupt switch (1: Interrupt)	0, 1	0	Yes	R/W(O)	–	–	R/W	S/R	1
Accumu-lated value output	011	Q1	Accumulated value (lower 4 digits)	0000 to 9999	0	Yes	–	–	W	–	S	2
	012	Q2	Accumulated value (upper 4 digits)	0000 to 9999	0	Yes	–	–	W	–	S	2

Note Set the operation cycle of ITEM004 to a value the same or shorter than the pulse cycle of the contact input.
Contacts inputs cannot be counted correctly if the operation cycle is set to a value that is longer than the pulse cycle of the contact input.

List of tag ITEMs on SCADA software

The following tag ITEMs are used to specify ITEMs with CSV tags from SCADA software when sending/receiving data to/from the CPU Unit using Receive All Blocks (model 461)/Send All Blocks (model 462). All tag ITEMs are fixed and cannot be changed.

ITEM	Data Name	CSV Tags in SCADA Software
		Tag ITEM (fixed)
000	Stop block operation command	MT_ST
003	Execution error display	ERR
008	Contact input	S1
009	Reset switch	S2
010	Interrupt switch	S3
011	Accumulated value (lower 4 digits)	Q1
012	Accumulated value (upper 4 digits)	Q2

Block Model	Block Name	Block Address
<186>	Accumulated Value Input/ Contact Output	100 to 349

Outline

This function block converts accumulated values inputs to contact outputs (low-speed pulses).

•This function block is used when the Contact Output Unit is used instead of the Pulse Output Unit to output low-speed pulse train signals.
•Connect contact outputs in the Contact Distributor block (Block Model 201) or Step Ladder Program block (Block Model 301).
•The next operation cycle is set to 0 (OFF) after the contact output signal has turned 1 (ON) for one operation cycle.
•Input values are accumulated internally when the output pulse rate is twice or more than the operation cycle and the output speed cannot keep pace with conversion.
•If internal accumulation continues, change the decimal point shift setting to set a slower pulse rate.

Note: •The maximum value of the internal counter is 99999999.
•When a cold start is performed, the accumulated values that were held before CPU Unit output turned OFF or before running of the Loop Control Unit was stopped are cleared from memory. These accumulated values are held when a hot start is performed.

Function block applications

Input of accumulated values from the Accumulator for instantaneous value input block (Block Model 150) as P1 accumulated value input
Notification of accumulated values by an on-site contact input mechanical counter

Block diagram

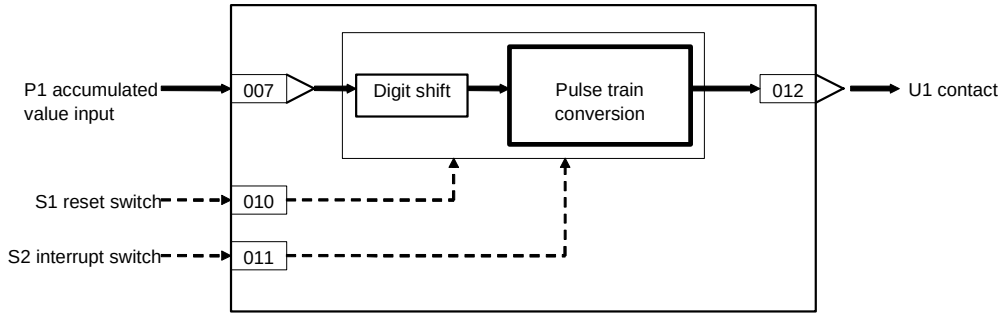

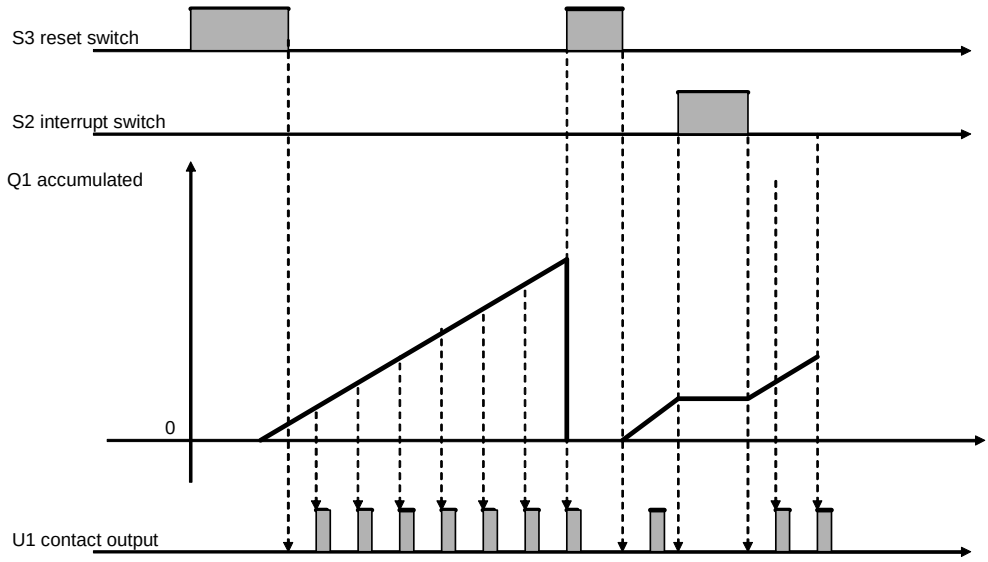

ITEM list

*1:On the CX-Process Monitor, the R/W mode is indicated in the Tuning screen or in the Control screen.

ITEM TYPE	ITEM	Symbol	Data Description	Data Range	Default	COLD start initialization	R/W Mode R: Read, W: Write, R/W: R/W-enabled, -: R/W-disabled Note: r and r/w: Read and read/write for validate action or monitor run status by CX-Process Tool or Monitor, (S): Initial setting data, (O): Operation data					Data Length (bytes)
							According to CX-Process Tool	According to CX-Process Monitor *1	According to ITEM Setting block	According to Step Ladder Program	Send/ Receive All Blocks	
Contact input	000		Stop block operation command (0: Cancel stop, 1: Stop)	0, 1	0	–	–	–	–	–	S/R	1
Parameter	001		Comment	23 characters	Block name	–	R/W(S)	–	–	–	–	24
	002		Block Model: Accumulated Value Input/Contact Output	186	186	–	R/W(S)	–	–	–	–	2
Special	003		Execution error display 0: Normal, Other: Error (See Appendix "Execution Error Code List.")		0000	–	r	–	–	–	S	2
Parameter	004		Operation cycle (sec) 0: Common, 1: 0.1, 2: 0.2, 3: 0.5, 4: 1, 5: 2	0 to 5	0	–	R/W(S)	–	–	–	–	2
Accumulated value input connection information	007		P1 source designation (BBB: Block address, III: ITEM No., Connection mandatory)	BBBIII	000000	–	R/W(S)	–	–	–	–	4
Accumu-lated value input	008	P1	Input	0 to 9999	0	Yes	r	–	–	–	S	2
Parameter	009		Decimal point shift (10x, -3: x0.001, -2: x0.01, -1: x0.1, 0: x1, 1: x10)	-3 to +1	0	–	R/W(S)	–	–	–	–	1
Contact input	010	S1	Counter reset switch (1: Reset)	0, 1	0	Yes	R/W(O)	–	–	R/W	S/R	1
	011	S2	Interrupt switch (1: Interrupt)	0, 1	0	Yes	R/W(O)	–	–	R/W	S/R	1
Contact output	012	U1	Contact output	0, 1	0	Yes	–	–	–	R	S	1

List of tag ITEMs on SCADA software

The following tag ITEMs are used to specify ITEMs with CSV tags from SCADA software when sending/receiving data to/from the CPU Unit using Receive All Blocks (model 461)/Send All Blocks (model 462). All tag ITEMs are fixed and cannot be changed.

ITEM	Data Name	CSV Tags in SCADA Software
		Tag ITEM (fixed)
000	Stop block operation command	MT_ST
003	Execution error display	ERR
008	P1 input	P1
010	Counter reset switch	S1
011	Interrupt switch	S2
012	Contact output	U1

Block Model	Block Name	Block Address
<192>	Analog/Pulse Width Converter	100 to 349

Outline

This function block changes the ON/OFF duration ratio in a constant cycle so that it is proportional to the analog input signal. (The ON duration ratio is changed within the range 0 to 100% corresponding to analog input range 0 to 100%.)

- The ON elapsed time and analog input value (that is, the ON time setting value) are compared at each operation cycle. When the analog input becomes OFF, the OFF state continues until CT pulse cycle time is completed.
- This function block is used, for example, to manipulate an ON/OFF control heater by output from a PID controller (time-proportional control).
- U1 contact output is set to 0 (OFF) for the entire cycle when input is 0% or less, and 1 (ON) for the entire cycle when input is 100% or more.
- The minimum time resolution is 0.1 seconds. However, time cannot be shorter than the operation cycle.
- U1 contact output is reset when S1 reset switch is set to 1 (ON), and set to 0 (OFF) for the entire cycle. When S1 reset switch is set to 0 (OFF), the ON time of U1 contact output is output proportionately to X1 analog input.

Function block applications

Time-proportional control (proportional control by which the time ratio between ON and OFF is changed proportionately)

Block diagram

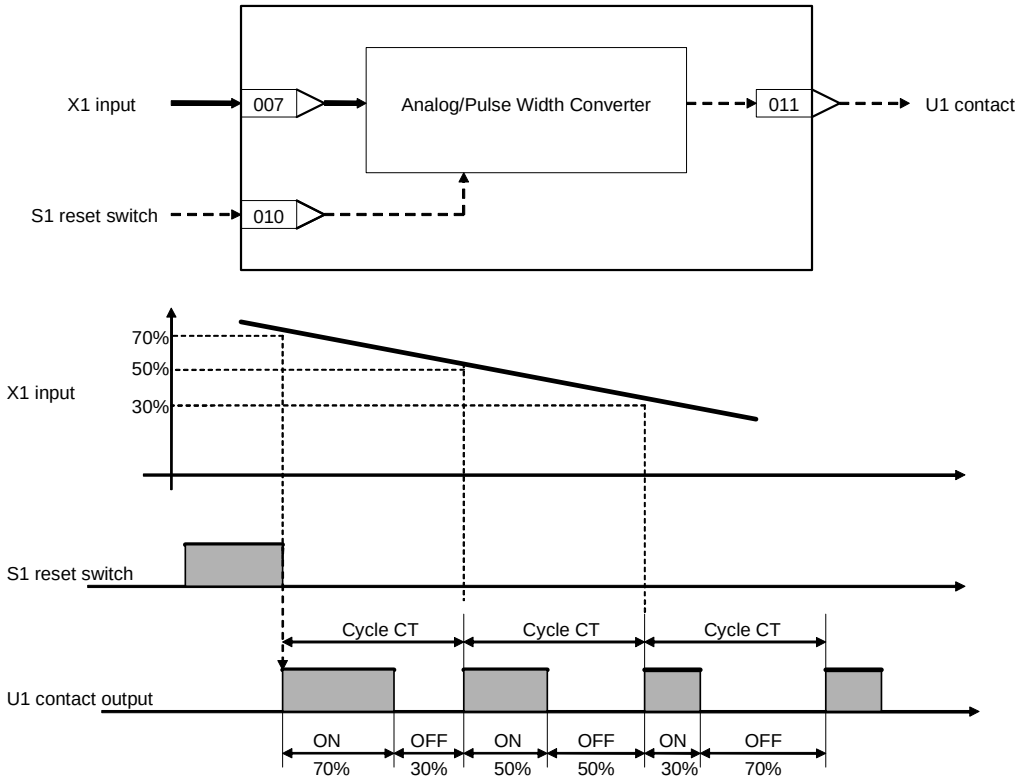

ITEM list

*1:On the CX-Process Monitor, the R/W mode is indicated in the Tuning screen or in the Control screen.

ITEM TYPE	ITEM	Symbol	Data Description	Data Range	Default	COLD start initialization	R/W Mode R: Read, W: Write, R/W: R/W-enabled, -: R/W-disabled Note: r and r/w: Read and read/write for validate action or monitor run status by CX-Process Tool or Monitor, (S): Initial setting data, (O): Operation data					Data Length (bytes)
							According to CX-Process Tool	According to CX-Process Monitor *1	According to ITEM Setting block	According to Step Ladder Program	Send/ Receive All Blocks	
Contact input	000		Stop block operation command (0: Cancel stop, 1: Stop)	0, 1	0	–	–	–	–	–	S/R	1
Parameter	001		Comment	23 characters	Block name	–	R/W(S)	–	–	–	–	24
	002		Block Model: Analog/Pulse Width Converter	192	192	–	R/W(S)	–	–	–	–	2
Special	003		Execution error display 0: Normal, Other: Error (See Appendix "Execution Error Code List.")		0000	–	r	–	–	–	S	2
Parameter	004		Operation cycle (sec) 0: Common, 1: 0.1, 2: 0.2, 3: 0.5, 4: 1, 5: 2	0 to 5	0	–	R/W(S)	–	–	–	–	2
Analog input connection information	007		X1 source designation BBB: Block address, III: ITEM No., (Connection mandatory)	BBBIII	000000	–	R/W(S)	–	–	–	–	4
Analog input	008	X1	Input	±320.00%	0.00	Yes	r	–	–	–	S	2
Parameter	009	CT	Pulse cycle time	1 to 1000.0s	1.0	–	R/W(S)	–	–	–	S/R	2
Contact input	010	S1	Reset switch (1: Reset)	0, 1	0	Yes	R/W(O)	–	–	R/W	S/R	1
Contact output	011	U1	Contact output	0, 1	0	Yes	–	–	–	R	S	1

List of tag ITEMs on SCADA software

The following tag ITEMs are used to specify ITEMs with CSV tags from SCADA software when sending/receiving data to/from the CPU Unit using Receive All Blocks (model 461)/Send All Blocks (model 462). All tag ITEMs are fixed and cannot be changed.

ITEM	Data Name	CSV tags in SCADA software
		Tag ITEM (fixed)
000	Stop block operation command	MT_ST
003	Execution error display	ERR
008	X1 input	X1
009	Pulse cycle time	CT
010	Reset switch	S1
011	Contact output	U1

Block Model	Block Name	Block Address
<201>	Contact Distributor	100 to 349

Outline

This function block connects contact signals between function blocks in a 1:1 connection without the need to use the Step Ladder Program block (Block Model 301).

•Eight pairs can be connected per Contact Distributor block.
•To connect a contact signal, specify the block number and ITEM number of the source and destination function blocks.
•The ITEMs that can be specified are the same as those in the Step Ladder Program block (Block Model 301). That is, "contact output" or "contact input" ITEMs can be specified as the source, and "contact input" ITEMs can be specified as the destination. For details, refer to ITEM type or R/W Mode "According to Step Ladder Program" in function block ITEM lists.

ITEM type	R/W method				Data Length (bytes)
		According to CX-Process Monitor	According to ITEM Setting block	According to Step Ladder Program	
Contact input		–	–	R/W	1

•Constant output or single output can be selected (supported from version 2.50 of the Loop Control Unit). For constant output, the contact input is connected to constant contact output. For single output, the contact input is connected to contact output only when 0 changes to 1, or 1 changes to 0.

Block diagram

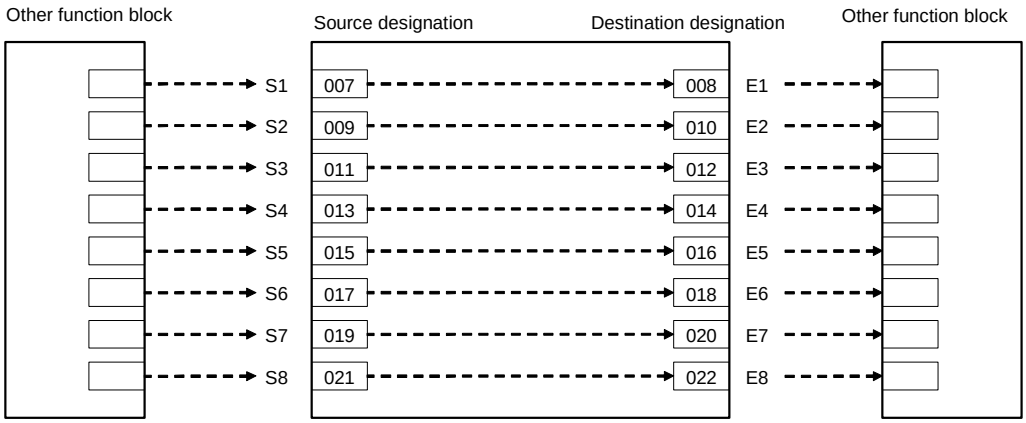

ITEM list

*1:On the CX-Process Monitor, the R/W mode is indicated in the Tuning screen or in the Control screen.

ITEM TYPE	ITEM	Symbol	Data Description	Data Range	Default	COLD start initialization	R/W Mode R: Read, W: Write, R/W: R/W-enabled, -: R/W-disabled Note: r and r/w: Read and read/write for validate action or monitor run status by CX-Process Tool or Monitor, (S): Initial setting data, (O): Operation data				Data Length (bytes)
							According to CX-Process Tool	According to CX-Process Monitor *1	According to ITEM Setting block	According to Step Ladder Program	
Contact input	000		Stop block operation command (0: Cancel stop, 1: Stop)	0, 1	0	–	–	–	–	–	1
Parameter	001		Comment	23 characters	Block name	–	R/W(S)	–	–	–	24
	002		Block Model: Contact Distributor	201	201	–	R/W(S)	–	–	–	2
Special	003		Execution error display 0: Normal, Other: Error (See Appendix "Execution Error Code List.")		0000	–	r	–	–	–	2
Parameters	004		Operation cycle (sec) 0: Common, 1: 0.1, 2: 0.2, 3: 0.5, 4: 1, 5: 2	0 to 5	0	–	R/W(S)	–	–	–	2
	006*1		Output type 0: Constant output, 1: Single output Note: For single output, the connection to contact output E@ is made only when contact input S@ changes.	0, 1	0	–	R/W(S)	–	–	–	1
Contact input connection information	007		S1 source designation (BBB: Block address, III: ITEM No.)	BBBIII	000000	–	R/W(S)	–	–	–	4
Contact output connection information	008		E1 destination designation (BBB: Block address, III: ITEM No.)	BBBIII	000000	–	R/W(S)	–	–	–	4
Contact input connection information	009		S2 source designation (BBB: Block address, III: ITEM No.)	BBBIII	000000	–	R/W(S)	–	–	–	4
Contact output connection information	010		E2 destination designation (BBB: Block address, III: ITEM No.)	BBBIII	000000	–	R/W(S)	–	–	–	4
Contact input connection information	011		S3 source designation (BBB: Block address, III: ITEM No.)	BBBIII	000000	–	R/W(S)	–	–	–	4
Contact output connection information	012		E3 destination designation (BBB: Block address, III: ITEM No.)	BBBIII	000000	–	R/W(S)	–	–	–	4
Contact input connection information	013		S4 source designation (BBB: Block address, III: ITEM No.)	BBBIII	000000	–	R/W(S)	–	–	–	4
Contact output connection information	014		E4 destination designation (BBB: Block address, III: ITEM No.)	BBBIII	000000	–	R/W(S)	–	–	–	4
Contact input connection information	015		S5 source designation (BBB: Block address, III: ITEM No.)	BBBIII	000000	–	R/W(S)	–	–	–	4
Contact output connection information	016		E5 destination designation (BBB: Block address, III: ITEM No.)	BBBIII	000000	–	R/W(S)	–	–	–	4
Contact input connection information	017		S6 source designation (BBB: Block address, III: ITEM No.)	BBBIII	000000	–	R/W(S)	–	–	–	4
Contact output connection information	018		E6 destination designation (BBB: Block address, III: ITEM No.)	BBBIII	000000	–	R/W(S)	–	–	–	4
Contact input connection information	019		S7 source designation (BBB: Block address, III: ITEM No.)	BBBIII	000000	–	R/W(S)	–	–	–	4
Contact output connection information	020		E7 destination designation (BBB: Block address, III: ITEM No.)	BBBIII	000000	–	R/W(S)	–	–	–	4
Contact input connection information	021		S8 source designation (BBB: Block address, III: ITEM No.)	BBBIII	000000	–	R/W(S)	–	–	–	4
Contact output connection information	022		E8 destination designation (BBB: Block address, III: ITEM No.)	BBBIII	000000	–	R/W(S)	–	–		4

*1: This ITEM has been added to Loop Control Unit Ver. 2.50.

Block Model	Block Name	Block Address
<202>	Constant Comparator	100 to 349

Outline

This function block compares (one of >, = or < comparison mode) analog input signals and constants, and outputs the comparison results as contacts.

•Comparison can be performed on up to eight sets of signals and constants.
•All outputs for the comparison results can be forcibly turned ON or OFF.
•All comparison operations can be stopped.

Note: When the comparison mode is set to either > or <, comparison contacts do not have hysteresis.

Function block applications

Switching of control conditions (PID constants, heat/cool control, etc.) when the input is a certain value or higher (matching a certain value or a certain value or lower)

Block diagram

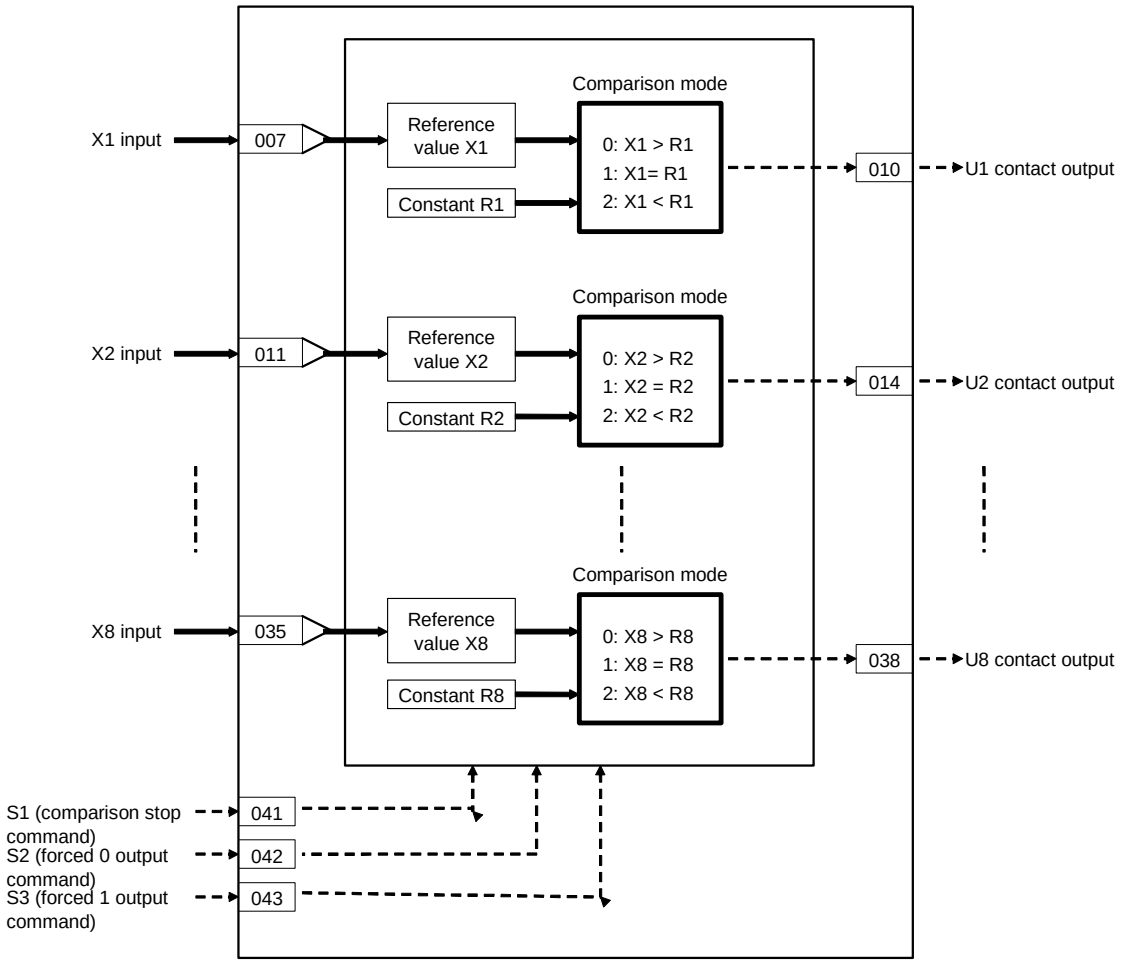

ITEM list

*1:On the CX-Process Monitor, the R/W mode is indicated in the Tuning screen or in the Control screen.

ITEM TYPE	ITEM	Symbol	Data Description	Data Range	Default	COLD start initialization	R/W Mode R: Read, W: Write, R/W: R/W-enabled, -: R/W-disabled Note: r and r/w: Read and read/write for validate action or monitor run status by CX-Process Tool or Monitor, (S): Initial setting data, (O): Operation data					Data Length (bytes)
							According to CX-Process Tool	According to CX-Process Monitor *1	According to ITEM Setting block	According to Step Ladder Program	Send/ Receive All Blocks	
Contact input	000		Stop block operation command (0: Cancel stop, 1: Stop)	0, 1	0	–	–	–	–	–	S/R	1
Parameter	001		Comment	23 characters	Block name	–	R/W(S)	–	–	–	–	24
	002		Block Model: Constant Comparator	202	202	–	R/W(S)	–	–	–	–	2
Special	003		Execution error display 0: Normal, Other: Error (See Appendix "Execution Error Code List")		0000	–	r	–	–	–	S	2
Parameter	004		Operation cycle (s) 0: Common, 1: 0.1, 2: 0.2, 3: 0.5, 4: 1, 5: 2	0 to 5	0	–	R/W(S)	–	–	–	–	2
Analog input wiring information	007		X1 source designation BBB: Block address, III: ITEM No.	BBBIII	000000	–	R/W(S)	–	–	–	–	4
Parameter	008		R1 constant	±320.00%	0.00	–	R/W(O)	–	W	–	S/R	2
	009		C1 comparison mode (0: X>R, 1: X=R, 2: X<R)	0 to 2	1	–	R/W(O)	–	W	–	–	1
Contact output	010	U1	Comparison result	0, 1	0	Yes	–	–	–	R	S	1
Analog input wiring information	011		X2 source designation BBB: Block address, III: ITEM No.	BBBIII	000000	–	R/W(S)	–	–	–	–	4
Parameter	012		R2 constant	±320.00%	0.00	–	R/W(O)	–	W	–	S/R	2
	013		C2 comparison mode (0: X>R, 1: X=R, 2: X<R)	0 to 2	1	–	R/W(O)	–	W	–	–	1
Contact output	014	U2	Comparison result	0, 1	0	Yes	–	–	–	R	S	1
Analog input wiring information	015		X3 source designation BBB: Block address, III: ITEM No.	BBBIII	000000	–	R/W(S)	–	–	–	–	4
Parameter	016		R3 constant	±320.00%	0.00	–	R/W(O)	–	W	–	S/R	2
	017		C3 comparison mode (0: X>R, 1: X=R, 2: X<R)	0 to 2	1	–	R/W(O)	–	W	–	–	1
Contact output	018	U3	Comparison result	0, 1	0	Yes	–	–	–	R	S	1
Analog input wiring information	019		X4 source designation BBB: Block address, III: ITEM No.	BBBIII	000000	–	R/W(S)	–	–	–	–	4
Parameter	020		R4 constant	±320.00%	0.00	–	R/W(O)	–	W	–	S/R	2
	021		C4 comparison mode (0: X>R, 1: X=R, 2: X<R)	0 to 2	1	–	R/W(O)	–	W	–	–	1
Contact output	022	U4	Comparison result	0, 1	0	Yes	–	–	–	R	S	1
Analog input wiring information	023		X5 source designation BBB: Block address, III: ITEM No.	BBBIII	000000	–	R/W(S)	–	–	–	–	4
Parameter	024		R5 constant	±320.00%	0.00	–	R/W(O)	–	W	–	S/R	2
	025		C5 comparison mode (0: X>R, 1: X=R, 2: X<R)	0 to 2	1	–	R/W(O)	–	W	–	–	1
Contact output	026	U5	Comparison result	0, 1	0	Yes	–	–	–	R	S	1
Analog input wiring information	027		X6 source designation BBB: Block address, III: ITEM No.	BBBIII	000000	–	R/W(S)	–	–	–	–	4
Parameter	028		R6 constant	±320.00%	0.00	–	R/W(O)	–	W	–	S/R	2
	029		C6 comparison mode (0: X>R, 1: X=R, 2: X<R)	0 to 2	1	–	R/W(O)	–	W	–	–	1
Contact output	030	U6	Comparison result	0, 1	0	Yes	–	–	–	R	S	1
Analog input wiring information	031		X7 source designation BBB: Block address, III: ITEM No.	BBBIII	000000	–	R/W(S)	–	–	–	–	4
Parameter	032		R7 constant	±320.00%	0.00	–	R/W(O)	–	W	–	S/R	2
	033		C7 comparison mode (0: X>R, 1: X=R, 2: X<R)	0 to 2	1	–	R/W(O)	–	W	–	–	1

*1:On the CX-Process Monitor, the R/W mode is indicated in the Tuning screen or in the Control screen.

ITEM TYPE	ITEM	Symbol	Data Description	Data Range	Default	COLD start initialization	R/W Mode R: Read, W: Write, R/W: R/W-enabled, -: R/W-disabled Note: r and r/w: Read and read/write for validate action or monitor run status by CX-Process Tool or Monitor, (S): Initial setting data, (O): Operation data					Data Length (bytes)
							According to CX-Process Tool	According to CX-Process Monitor *1	According to ITEM Setting block	According to Step Ladder Program	Send/ Receive All Blocks	
Contact output	034	U7	Comparison result	0, 1	0	Yes	–	–	–	R	S	1
Analog input wiring information	035		X8 source designation BBB: Block address, III: ITEM No.	BBBIII	000000	–	R/W(S)	–	–	–	–	4
Parameter	036		R8 constant	±320.00%	0.00	–	R/W(O)	–	W	–	S/R	2
	037		C8 comparison mode (0: X>R, 1: X=R, 2: X<R)	0 to 2	1	–	R/W(O)	–	W	–	–	1
Contact output	038	U8	Comparison result	0, 1	0	Yes	–	–	–	R	S	1
Contact input	041	S1	Comparison stop command	0, 1	0	Yes	R/W(O)	–	–	R/W	S/R	1
	042	S2	Forced 0 output command	0, 1	0	Yes	R/W(O)	–	–	R/W	S/R	1
	043	S3	Forced 1 output command	0, 1	0	Yes	R/W(O)	–	–	R/W	S/R	1
Analog input	051*1	X1	X1 input	±320.00%	0.00	Yes	r	–	–	–	S	2
	052*1	X2	X2 input	±320.00%	0.00	Yes	r	–	–	–	S	2
	053*1	X3	X3 input	±320.00%	0.00	Yes	r	–	–	–	S	2
	054*1	X4	X4 input	±320.00%	0.00	Yes	r	–	–	–	S	2
	055*1	X5	X5 input	±320.00%	0.00	Yes	r	–	–	–	S	2
	056*1	X6	X6 input	±320.00%	0.00	Yes	r	–	–	–	S	2
	057*1	X7	X7 input	±320.00%	0.00	Yes	r	–	–	–	S	2
	058*1	X8	X8 input	±320.00%	0.00	Yes	r	–	–	–	S	2

*1: These ITEMs were added in Loop Control Unit Ver. 2.00.

Note: •When S1 comparison stop command turns 1 (ON), all comparison processing on inputs X1 to X8 is stopped. All comparison result outputs at that time are held at the output values that were current when S1 turned 1 (ON).
•When S2 forced 0 output command turns 1 (ON), all contact outputs U1 to U8 turn 0 (OFF) regardless of the comparison results.
•When S3 forced 1 output command turns 1 (ON), all contact outputs U1 to U8 turn 1 (ON) regardless of the comparison results.
•The S2 forced 0 output command and S3 forced 1 output command are given priority over the S1 comparison stop command.
•If both the S2 forced 0 output command and S3 forced 1 output command turn 1 (ON), an execution error (error code 19: illegal operation) occurs.

List of tag ITEMs on SCADA software

The following tag ITEMs are used to specify ITEMs with CSV tags from SCADA software when sending/receiving data to/from the CPU Unit using Receive All Blocks (model 461)/Send All Blocks (model 462). All tag ITEMs are fixed and cannot be changed.

ITEM	Data Name	CSV Tags in SCADA Software
		Tag ITEM (fixed)
000	Stop block operation command	MT_ST
003	Execution error display	ERR
008	R1 constant	R1
010	U1 comparison result	U1
012	R2 constant	R2
014	U2 comparison result	U2
016	R3 constant	R3
018	U3 comparison result	U3
020	R4 constant	R4
022	U4 comparison result	U4
024	R5 constant	R5
026	U5 comparison result	U5
028	R6 constant	R6
030	U6 comparison result	U6
032	R7 constant	R7
034	U7 comparison result	U7
036	R8 constant	R8
038	U8 comparison result	U8
041	Comparison stop command	S1
042	Forced 0 output command	S2
043	Forced 1 output command	S3
051	X1 input	X1
052	X2 input	X2
053	X3 input	X3
054	X4 input	X4
055	X5 input	X5
056	X6 input	X6
057	X7 input	X7
058	X8 input	X8

Block Model	Block Name	Block Address
<203>	Variable Comparator	100 to 349

Outline

This function block compares (one of >, = or < comparison mode) pairs of analog signals, and outputs the comparison results as contacts.

•Comparison can be performed on up to eight sets of analog input signal pairs.
•All outputs for the comparison results can be forcibly turned ON or OFF.
•All comparison operations can be stopped.

Note: When the comparison mode is set to either > or <, comparison contacts do not have hysteresis.

Function block applications

Switching of control conditions (PID constants, heat/cool control, etc.) when the input is equal to or higher than the comparison input (or matching the comparison input, or equal to or lower than the comparison input)

Block diagram

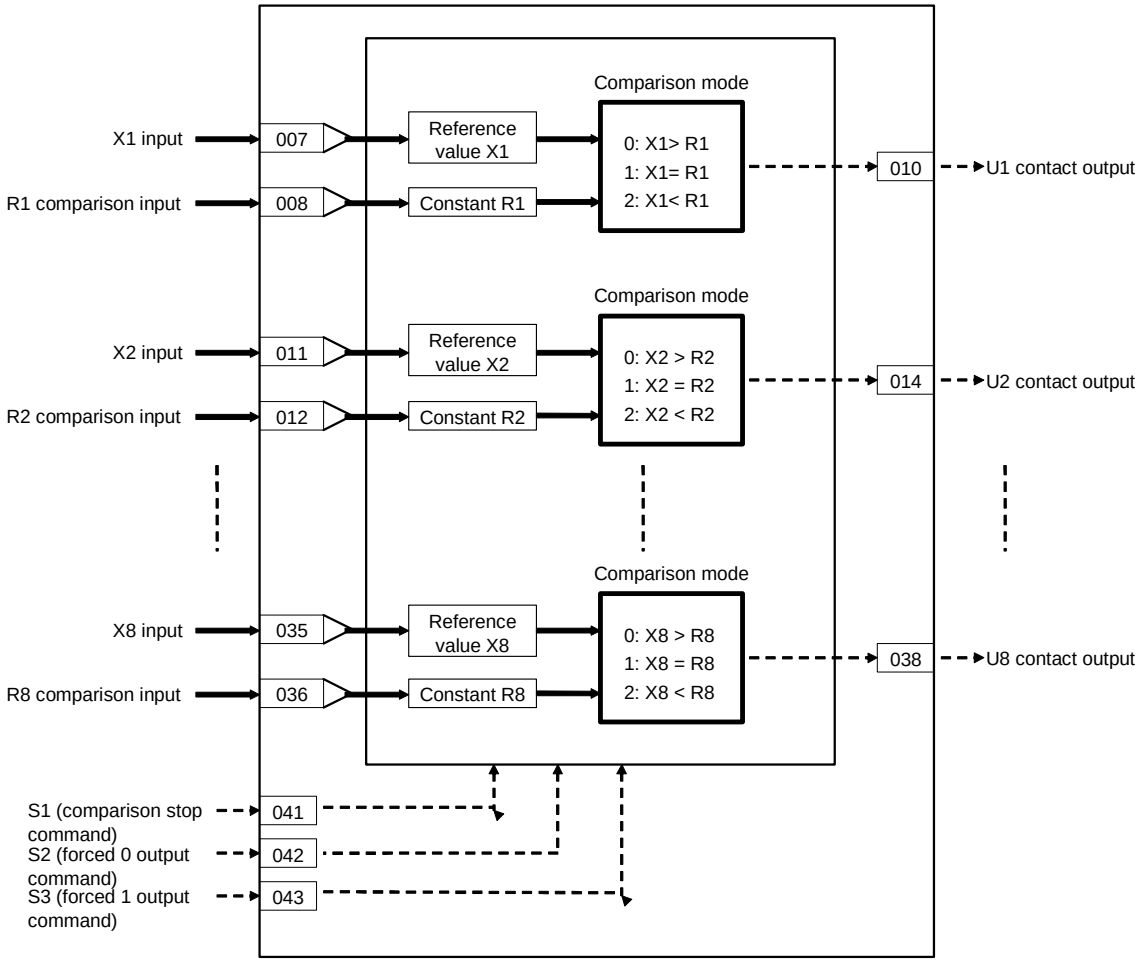

ITEM list

*1:On the CX-Process Monitor, the R/W mode is indicated in the Tuning screen or in the Control screen.

ITEM TYPE	ITEM	Symbol	Data Description	Data Range	Default	COLD start initialization	R/W Mode R: Read, W: Write, R/W: R/W-enabled, -: R/W-disabled Note: r and r/w: Read and read/write for validate action or monitor run status by CX-Process Tool or Monitor, (S): Initial setting data, (O): Operation data					Data Length (bytes)
							According to CX-Process Tool	According to CX-Process Monitor *1	According to ITEM Setting block	According to Step Ladder Program	Send/ Receive All Blocks	
Contact input	000		Stop block operation command (0: Cancel stop, 1: Stop)	0, 1	0	–	–	–	–	–	S/R	1
Parameter	001		Comment	23 characters	Block name	–	R/W(S)	–	–	–	–	24
	002		Block Model: Variable Comparator	203	203	–	R/W(S)	–	–	–	–	2
Special	003		Execution error display 0: Normal, Other: Error (See Appendix "Execution Error Code List")		0000	–	r	–	–	–	S	2
Parameter	004		Operation cycle (s) 0: Common, 1: 0.1, 2: 0.2, 3: 0.5, 4: 1, 5: 2	0 to 5	0	–	R/W(S)	–	–	–	–	2
Analog input wiring information	007		X1 source designation BBB: Block address, III: ITEM No.	BBBIII	000000	–	R/W(S)	–	–	–	–	4
	008		R1 source designation BBB: Block address, III: ITEM No.	BBBIII	000000	–	R/W(S)	–	–	–	–	4
	009		C1 comparison mode (0: X>R, 1: X=R, 2: X<R)	0 to 2	1	–	R/W(O)	–	W	–	–	1
Contact output	010	U1	Comparison result	0, 1	0	Yes	–	–	–	R	S	1
Analog input wiring information	011		X2 source designation BBB: Block address, III: ITEM No.	BBBIII	000000	–	R/W(S)	–	–	–	–	4
	012		R2 source designation BBB: Block address, III: ITEM No.	BBBIII	000000	–	R/W(S)	–	–	–	–	4
	013		C2 comparison mode (0: X>R, 1: X=R, 2: X<R)	0 to 2	1	–	R/W(O)	–	W	–	–	1
Contact output	014	U2	Comparison result	0, 1	0	Yes	–	–	–	R	S	1
Analog input wiring information	015		X3 source designation BBB: Block address, III: ITEM No.	BBBIII	000000	–	R/W(S)	–	–	–	–	4
	016		R3 source designation BBB: Block address, III: ITEM No.	BBBIII	000000	–	R/W(S)	–	–	–	–	4
	017		C3 comparison mode (0: X>R, 1: X=R, 2: X<R)	0 to 2	1	–	R/W(O)	–	W	–	–	1
Contact output	018	U3	Comparison result	0, 1	0	Yes	–	–	–	R	S	1
Analog input wiring information	019		X4 source designation BBB: Block address, III: ITEM No.	BBBIII	000000	–	R/W(S)	–	–	–	–	4
	020		R4 source designation BBB: Block address, III: ITEM No.	BBBIII	000000	–	R/W(S)	–	–	–	–	4
	021		C4 comparison mode (0: X>R, 1: X=R, 2: X<R)	0 to 2	1	–	R/W(O)	–	W	–	–	1
Contact output	022	U4	Comparison result	0, 1	0	Yes	–	–	–	R	S	1
Analog input wiring information	023		X5 source designation BBB: Block address, III: ITEM No.	BBBIII	000000	–	R/W(S)	–	–	–	–	4
	024		R5 source designation BBB: Block address, III: ITEM No.	BBBIII	000000	–	R/W(S)	–	–	–	–	4
	025		C5 comparison mode (0: X>R, 1: X=R, 2: X<R)	0 to 2	1	–	R/W(O)	–	W	–	–	1
Contact output	026	U5	Comparison result	0, 1	0	Yes	–	–	–	R	S	1
Analog input wiring information	027		X6 source designation BBB: Block address, III: ITEM No.	BBBIII	000000	–	R/W(S)	–	–	–	–	4
	028		R6 source designation BBB: Block address, III: ITEM No.	BBBIII	000000	–	R/W(S)	–	–	–	–	4
	029		C6 comparison mode (0: X>R, 1: X=R, 2: X<R)	0 to 2	1	–	R/W(O)	–	W	–	–	1
Contact output	030	U6	Comparison result	0, 1	0	Yes	–	–	–	R	S	1

*1:On the CX-Process Monitor, the R/W mode is indicated in the Tuning screen or in the Control screen.

ITEM TYPE	ITEM	Symbol	Data Description	Data Range	Default	COLD start initialization	R/W Mode R: Read, W: Write, R/W: R/W-enabled, -: R/W-disabled Note: r and r/w: Read and read/write for validate action or monitor run status by CX-Process Tool or Monitor, (S): Initial setting data, (O): Operation data					Data Length (bytes)
							According to CX-Process Tool	According to CX-Process Monitor *1	According to ITEM Setting block	According to Step Ladder Program	Send/ Receive All Blocks	
Analog input wiring information	031		X7 source designation BBB: Block address, III: ITEM No.	BBBIII	000000	–	R/W(S)	–	–	–	–	4
	032		R7 source designation BBB: Block address, III: ITEM No.	BBBIII	000000	–	R/W(S)	–	–	–	–	4
	033		C7 comparison mode (0: X>R, 1: X=R, 2: X<R)	0 to 2	1	–	R/W(O)	–	W	–	–	1
Contact output	034	U7	Comparison result	0, 1	0	Yes	–	–	–	R	S	1
Analog input wiring information	035		X8 source designation BBB: Block address, III: ITEM No.	BBBIII	000000	–	R/W(S)	–	–	–	–	4
	036		R8 source designation BBB: Block address, III: ITEM No.	BBBIII	000000	–	R/W(S)	–	–	–	–	4
	037		C8 comparison mode (0: X>R, 1: X=R, 2: X<R)	0 to 2	1	–	R/W(O)	–	W	–	–	1
Contact output	038	U8	Comparison result	0, 1	0	Yes	–	–	–	R	S	1
Contact input	041	S1	Comparison stop command	0, 1	0	Yes	R/W(O)	–	–	R/W	S/R	1
	042	S2	Forced 0 output command	0, 1	0	Yes	R/W(O)	–	–	R/W	S/R	1
	043	S3	Forced 1 output command	0, 1	0	Yes	R/W(O)	–	–	R/W	S/R	1
Analog input	051*1	X1	X1 input	±320.00%	0.00	Yes	r	–	–	–	S	2
	052*1	X2	X2 input	±320.00%	0.00	Yes	r	–	–	–	S	2
	053*1	X3	X3 input	±320.00%	0.00	Yes	r	–	–	–	S	2
	054*1	X4	X4 input	±320.00%	0.00	Yes	r	–	–	–	S	2
	055*1	X5	X5 input	±320.00%	0.00	Yes	r	–	–	–	S	2
	056*1	X6	X6 input	±320.00%	0.00	Yes	r	–	–	–	S	2
	057*1	X7	X7 input	±320.00%	0.00	Yes	r	–	–	–	S	2
	058*1	X8	X8 input	±320.00%	0.00	Yes	r	–	–	–	S	2
	061*1	R1	R1 input	±320.00%	0.00	Yes	r	–	–	–	S	2
	062*1	R2	R2 input	±320.00%	0.00	Yes	r	–	–	–	S	2
	063*1	R3	R3 input	±320.00%	0.00	Yes	r	–	–	–	S	2
	064*1	R4	R4 input	±320.00%	0.00	Yes	r	–	–	–	S	2
	065*1	R5	R5 input	±320.00%	0.00	Yes	r	–	–	–	S	2
	066*1	R6	R6 input	±320.00%	0.00	Yes	r	–	–	–	S	2
	067*1	R7	R7 input	±320.00%	0.00	Yes	r	–	–	–	S	2
	068*1	R8	R8 input	±320.00%	0.00	Yes	r	–	–	–	S	2

*1: These ITEMs were added in Loop Control Unit Ver. 2.00.

Note •When S1 comparison stop command turns 1 (ON), all comparison processing on inputs X1 to X8 is stopped. All comparison result outputs at that time are held at the output values that were current when S1 turned 1 (ON).
•When S2 forced 0 output command turns 1 (ON), all contact outputs U1 to U8 turn 0 (OFF) regardless of the comparison results.
•When S3 forced 1 output command turns 1 (ON), all contact outputs U1 to U8 turn 1 (ON) regardless of the comparison results.
•The S2 forced 0 output command and S3 forced 1 output command are given priority over the S1 comparison stop command.
•If both the S2 forced 0 output command and S3 forced 1 output command turn 1 (ON), an execution error (error code 19: illegal operation) occurs.

List of tag ITEMs on SCADA software

The following tag ITEMs are used to specify ITEMs with CSV tags from SCADA software when sending/receiving data to/from the CPU Unit using Receive All Blocks (model 461)/Send All Blocks (model 462). All tag ITEMs are fixed and cannot be changed.

ITEM	Data Name	CSV Tags in SCADA Software
		Tag ITEM (fixed)
000	Stop block operation command	MT_ST
003	Execution error display	ERR
010	U1 comparison result	U1
014	U2 comparison result	U2
018	U3 comparison result	U3
022	U4 comparison result	U4
026	U5 comparison result	U5
030	U6 comparison result	U6
034	U7 comparison result	U7
038	U8 comparison result	U8
041	Comparison stop command	S1
042	Forced 0 output command	S2
043	Forced 1 output command	S3
051	X1 input	X1
052	X2 input	X2
053	X3 input	X3
054	X4 input	X4
055	X5 input	X5
056	X6 input	X6
057	X7 input	X7
058	X8 input	X8
061	R1 input	R1
062	R2 input	R2
063	R3 input	R3
064	R4 input	R4
065	R5 input	R5
066	R6 input	R6
067	R7 input	R7
068	R8 input	R8

Block Model	Block Name	Block Address
<205>	Timer	100 to 349

Outline

This function block performs 2-stage alarm operations.

•Timer operation is performed when S1 run/stop command is set to 1 (ON). When the count reaches "setting - prediction", U2 contact output is set to 1 (ON). When the setting is reached, U1 contact output is set to 1 (ON). When S1 run/stop command is set to 0 (OFF), the timer is reset, Y1 time elapsed is set to 0, and contact outputs U1 and U2 are set to 0 (OFF).
•Timer operation stops when S2 interrupt switch is set to 1 (ON).
•Set the number of hours before the setting as the prediction.
•The minimum resolution is the same as the operation cycle.
•Counting of the elapsed time continues even after the timer has reached the setting and stops when the timer reaches 3200.0.

Note: When a cold start is performed, the current timer value that was held before output OFF or before running of the Loop Control Unit was stopped are cleared from memory. This value is held when a hot start is performed.

Block diagram

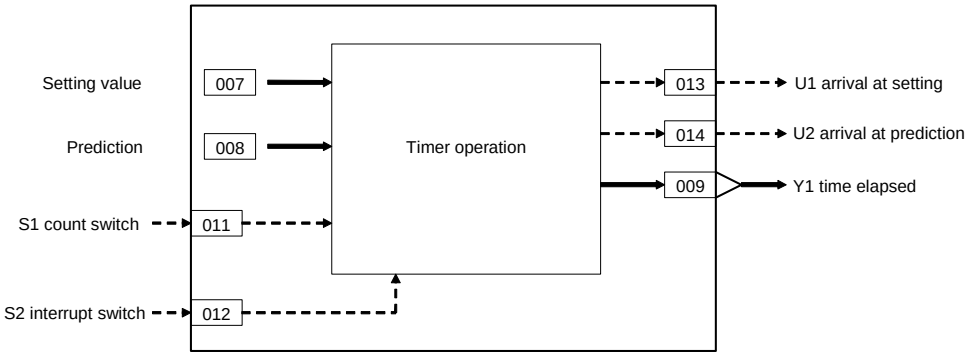

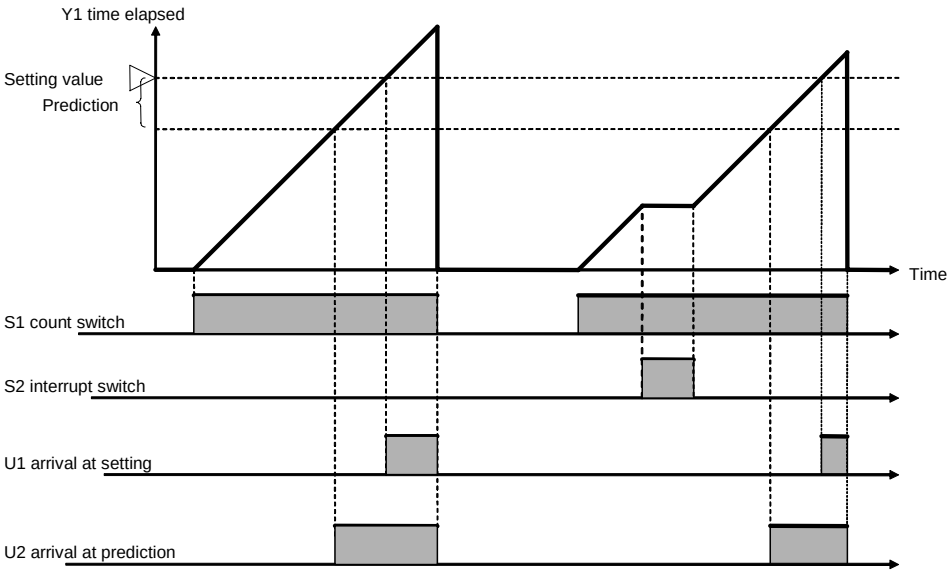

ITEM list

*1:On the CX-Process Monitor, the R/W mode is indicated in the Tuning screen or in the Control screen.

ITEM TYPE	ITEM	Symbol	Data Description	Data Range	Default	COLD start initialization	R/W Mode R: Read, W: Write, R/W: R/W-enabled, -: R/W-disabled Note: r and r/w: Read and read/write for validate action or monitor run status by CX-Process Tool or Monitor, (S): Initial setting data, (O): Operation data					Data Length (bytes)
							According to CX-Process Tool	According to CX-Process Monitor *1	According to ITEM Setting block	According to Step Ladder Program	Send/Receive All Blocks	
Contact input	000		Stop block operation command (0: Cancel stop, 1: Stop)	0, 1	0	–	–	–	–	–	S/R	1
Parameter	001		Comment	23 characters	Block name	–	R/W(S)	–	–	–	–	24
	002		Block Model: Timer	205	205	–	R/W(S)	–	–	–	–	2
Special	003		Execution error display 0: Normal, Other: Error (See Appendix "Execution Error Code List.")		0000	–	r	–	–	–	S	2
Parameter	004		Operation cycle (sec) 0: Common, 1: 0.1, 2: 0.2, 3: 0.5, 4: 1, 5: 2	0 to 5	0	–	R/W(S)	–	–	–	–	2
	007		Setting	0 to 3200.0	0.0	–	R/W(O)	R/W	W	–	S/R	2
	008		Prediction (subtracted from setting)	0 to 3200.0	0.0	–	R/W(O)	R/W	W	–	S/R	2
Analog output	009	Y1	Time elapsed	0 to 3200.0	0.0	Yes	r	R	W	–	S	2
Parameter	010		Time unit (0: s, 1: min, 2: hr, 3: 0.1 s)	0 to 3	0	–	R/W(S)	R	–	–	S/R	1
Contact input	011	S1	Count switch	0, 1	0	Yes	R/W(O)	R/W	–	R/W	S/R	1
	012	S2	Interrupt switch	0, 1	0	Yes	R/W(O)	R/W	–	R/W	S/R	1
Contact output	013	U1	Arrival at setting	0, 1	0	Yes	–	R	–	R	S	1
	014	U2	Arrival at prediction	0, 1	0	Yes	–	R	–	R	S	1

List of tag ITEMs on CX-Process Monitor or SCADA software

The following tag ITEMs are used to specify ITEMs with either 1) Monitor tags when sending function blocks to the CX-Process Monitor from 1-Block/4-Block Send Terminal to Computer (Block Model 403/404) or 2) CSV tags from SCADA software when sending/receiving data to/from the CPU Unit using Receive All Blocks (Block Model 461)/Send All Blocks (Block Model 462). All tag ITEMs are fixed and cannot be changed.

ITEM	Data Name	CSV Tags in CX-Process Monitor	CSV Tags in SCADA Software
		Tag ITEM (fixed)	Tag ITEM (fixed)
000	Stop block operation command	MT_ST	MT_ST
003	Execution error display	None	ERR
007	Setting	SP	SP
008	Prediction (subtracted from setting)	PRESET	PRS
009	Time elapsed	PV	Y1
010	Time unit	None	TMU
011	Count switch	S1	S1
012	Interrupt switch	S2	S2
013	Arrival at setting	U1	U1
014	Arrival at prediction	U2	U2

Note Note that this function block cannot be sent by the 1-Block Send Terminal to Computer block (Block Model 403).

Block Model	Block Name	Block Address
<206>	ON/OFF Timer	100 to 349

Outline

This function block is a timer for performing ON-OFF operation at preset ON and OFF times.

•The minimum resolution is the same as the operation cycle.
•Timer operation is performed when S1 run/stop command is set to 1 (ON), and is reset when set to 0 (ON).

Note: When a cold start is performed, the current timer value that was held before output OFF or before running of the Loop Control Unit was stopped are cleared from memory. This value is held when a hot start is performed.

Function block applications

Sample PI control

Block diagram

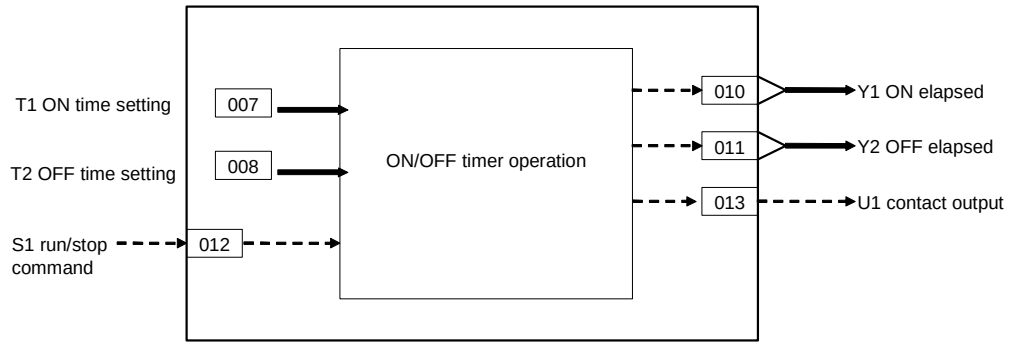

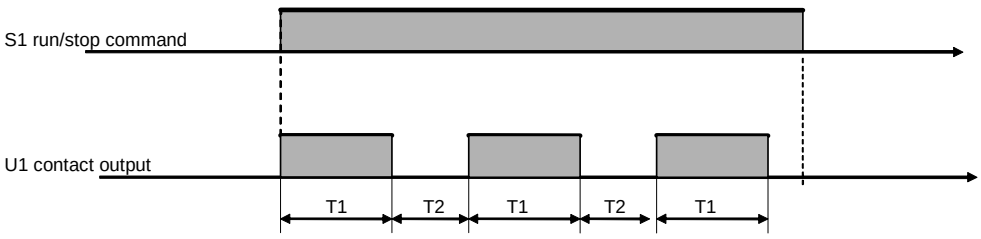

ITEM list

*1:On the CX-Process Monitor, the R/W mode is indicated in the Tuning screen or in the Control screen.

ITEM TYPE	ITEM	Symbol	Data Description	Data Range	Default	COLD start initialization	R/W Mode R: Read, W: Write, R/W: R/W-enabled, -: R/W-disabled Note: r and r/w: Read and read/write for validate action or monitor run status by CX-Process Tool or Monitor, (S): Initial setting data, (O): Operation data					Data Length (bytes)
							According to CX-Process Tool	According to CX-Process Monitor *1	According to ITEM Setting block	According to Step Ladder Program	Send/ Receive All Blocks	
Contact input	000		Stop block operation command (0: Cancel stop, 1: Stop)	0, 1	0	–	–	–	–	–	S/R	1
Parameter	001		Comment	23 characters	Block name	–	R/W(S)	–	–	–	–	24
	002		Block Model: ON/OFF Timer	206	206	–	R/W(S)	–	–	–	–	2
Special	003		Execution error display 0: Normal, Other: Error (See Appendix "Execution Error Code List.")		0000	–	r	–	–	–	S	2
Parameter	004		Operation cycle (sec) 0: Common, 1: 0.1, 2: 0.2, 3: 0.5, 4: 1, 5: 2	0 to 5	0	–	R/W(S)	–	–	–	–	2
Parameter	007	T1	ON time setting	0 to 3200.0	0.0	–	R/W(O)	–	W	–	S/R	2
	008	T2	OFF time setting	0 to 3200.0	0.0	–	R/W(O)	–	W	–	S/R	2
	009		Time unit (0: s, 1:min, 2: hr, 3:0.1 s)	0 to 3	0	–	R/W(S)	–	–	–	S/R	1
Analog output	010	Y1	Elapsed ON time	0 to 3200.0	0.0	Yes	r/w	–	–	–	S	2
	011	Y2	Elapsed OFF time	0 to 3200.0	0.0	Yes	r/w	–	–	–	S	2
Contact input/ parameter	012	S1	Run/stop command	0, 1	0	Yes	R/W(O)	–	–	R/W	S/R	1
Contact output	013	U1	Contact output	0, 1	0	Yes	–	–	–	R	S	1

List of tag ITEMs on SCADA software

The following tag ITEMs are used to specify ITEMs with CSV tags from SCADA software when sending/receiving data to/from the CPU Unit using Receive All Blocks (model 461)/Send All Blocks (model 462). All tag ITEMs are fixed and cannot be changed.

ITEM	Data Name	CSV Tags in SCADA Software
		Tag ITEM (fixed)
000	Stop block operation command	MT_ST
003	Execution error display	ERR
007	ON time setting	T1
008	OFF time setting	T2
009	Time unit	TMU
010	Elapsed ON time	Y1
011	Elapsed OFF time	Y2
012	Run/stop command	S1
013	Contact output	U1

Block Model	Block Name	Block Address
<207>	Clock Pulse	100 to 349

Outline

This function block outputs clock pulses that turn ON for one operation cycle only at each set time (Ts).

Clock pulses are output only for the duration that S1 operation command is 1 (ON). Output contacts remain 0 (OFF) when S1 operation command is 0 (OFF).

Function block applications

This function block is used to create a sequential control program (for example, for the measurement of current values at fixed time intervals) that takes the clock pulse as its input condition in Step Ladder Program block (Block Model 301).

Block diagram

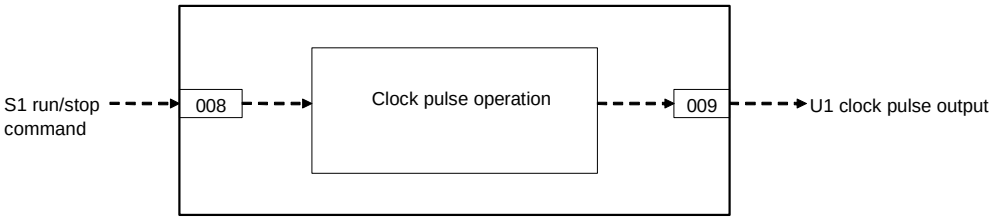

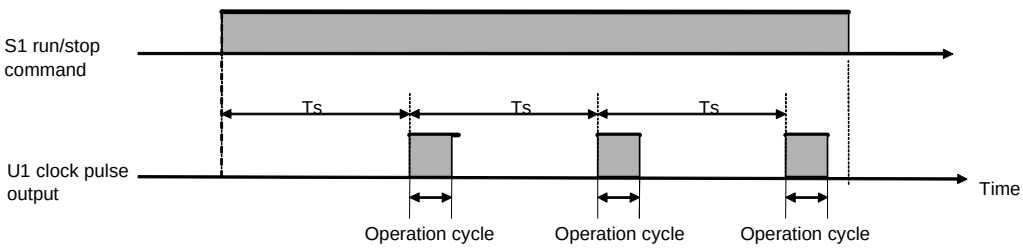

Note: When Ts is 0, clock pulse output is always 1 (ON) when operation command is 1 (ON).

ITEM list

*1:On the CX-Process Monitor, the R/W mode is indicated in the Tuning screen or in the Control screen.

ITEM TYPE	ITEM	Symbol	Data Description	Data Range	Default	COLD start initialization	R/W Mode R: Read, W: Write, R/W: R/W-enabled, -: R/W-disabled Note: r and r/w: Read and read/write for validate action or monitor run status by CX-Process Tool or Monitor, (S): Initial setting data, (O): Operation data					Data Length (bytes)
							According to CX-Process Tool	According to CX-Process Monitor *1	According to ITEM Setting block	According to Step Ladder Program	Send/Receive All Blocks	
Contact input	000		Stop block operation command (0: Cancel stop, 1: Stop)	0, 1	0	–	–	–	–	–	S/R	1
Parameter	001		Comment	23 characters	Block name	–	R/W(S)	–	–	–	–	24
	002		Block Model: Clock Pulse	207	207	–	R/W(S)	–	–	–	–	2
Special	003		Execution error display 0: Normal, Other: Error (See Appendix "Execution Error Code List")		0000	–	r	–	–	–	S	2
Parameter	004		Operation cycle (s) 0: Common, 1: 0.1, 2: 0.2, 3: 0.5, 4: 1	1 to 4	1	–	R/W(S)	–	–	–	–	2
Parameter	007		Ts setting (unit: s) Note: When set to 0 s, clock pulse output remains at 1 (ON) all the time.	0 to 32000s	0	–	R/W(O)	–	W	–	S/R	2
Contact input	008	S1	Operation command (1: Clock pulse output ON)	0, 1	0	Yes	R/W(O)	–	–	R/W	S/R	1
Contact output	009	U1	Clock pulse output	0, 1	0	Yes	–	–	–	R	S	1

List of tag ITEMs on SCADA software

The following tag ITEMs are used to specify ITEMs with CSV tags from SCADA software when sending/receiving data to/from the CPU Unit using Receive All Blocks (model 461)/Send All Blocks (model 462). All tag ITEMs are fixed and cannot be changed.

ITEM	Data Name	CSV Tags in SCADA Software
		Tag ITEM (fixed)
000	Stop block operation command	MT_ST
003	Execution error display	ERR
007	Ts setting	TS
008	Operation command	S1
009	Clock pulse output	U1

Block Model	Block Name	Block Address
<208>	Counter	100 to 349

Outline

This function block performs 2-stage alarm operations.

- The number of rising edges of S2 contact pulse input is counted and Y1 count is output when S1 run/stop command is set to 1 (ON). When the count reaches "setting - prediction", U2 contact output is set to 1 (ON). When the U1 contact output is set to 1 (ON). When S1 run/stop command is set to 0 (OFF), the timer is reset, Y1 count is set to 0, and contact outputs U1 and U2 are set to 0 (OFF).
- Set the value to be subtracted from the setting as the prediction.
- Though the counter returns to 0 when the count reaches 9999, the prediction arrival and setting arrival signals are held.

Note: When a cold start is performed, the current counter value that was held before output OFF or before running of the Loop Control Unit was stopped are cleared from memory. This value is held when a hot start is performed.

Block diagram

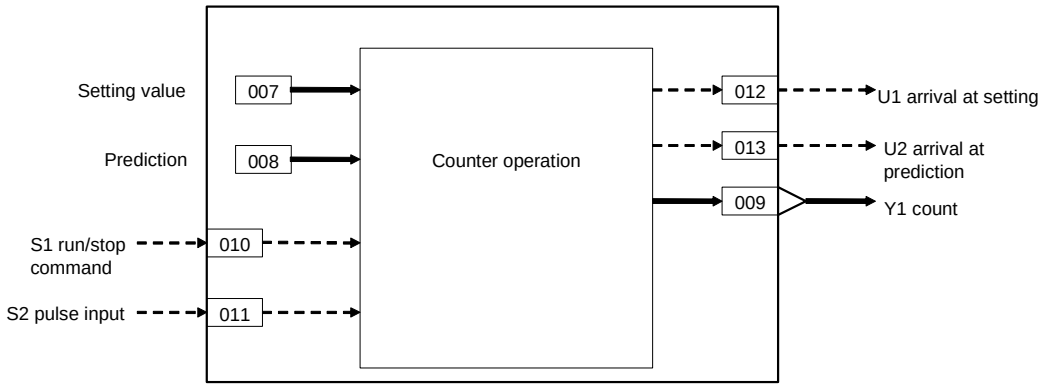

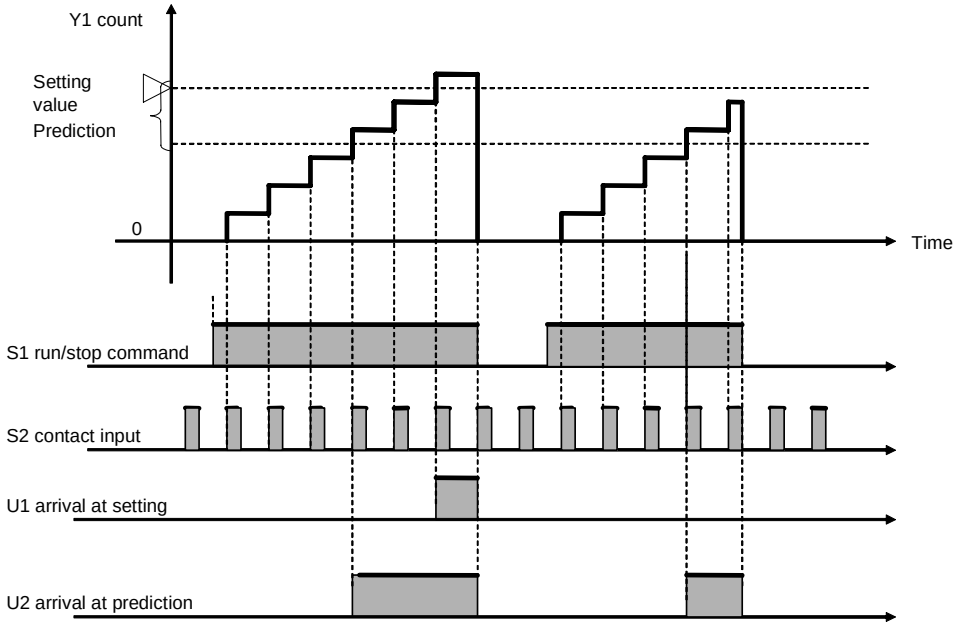

ITEM list

*1:On the CX-Process Monitor, the R/W mode is indicated in the Tuning screen or in the Control screen.

ITEM TYPE	ITEM	Symbol	Data Description	Data Range	Default	COLD start initialization	R/W Mode R: Read, W: Write, R/W: R/W-enabled, -: R/W-disabled Note: r and r/w: Read and read/write for validate action or monitor run status by CX-Process Tool or Monitor, (S): Initial setting data, (O): Operation data					Data Length (bytes)
							According to CX-Process Tool	According to CX-Process Monitor *1	According to ITEM Setting block	According to Step Ladder Program	Send/Receive All Blocks	
Contact input	000		Stop block operation command (0: Cancel stop, 1: Stop)	0, 1	0	–	–	–	–	–	S/R	1
Parameter	001		Comment	23 characters	Block name	–	R/W(S)	–	–	–	–	24
	002		Block Model: Counter	208	208	–	R/W(S)	–	–	–	–	2
Special	003		Execution error display 0: Normal, Other: Error (See Appendix "Execution Error Code List.")		0000	–	r	–	–	–	S	2
Parameter	004		Operation cycle (sec) 0: Common, 1: 0.1, 2: 0.2, 3: 0.5, 4: 1, 5: 2	0 to 5	0	–	R/W(S)	–	–	–	–	2
Parameter	007		Setting	0 to 9999	0	–	R/W(O)	R/W	W	–	S/R	2
	008		Prediction (subtracted from setting)	0 to 9999	0	–	R/W(O)	R/W	W	–	S/R	2
Analog output	009	Y1	Count	0 to 9999	0	Yes	r	R	–	–	S	2
Contact input	010	S1	Run/stop command	0, 1	0	Yes	R/W(O)	R/W	–	R/W	S/R	1
	011	S2	Pulse input	0, 1	0	Yes	R/W	R/W	–	R/W	–	1
Contact output	012	U1	Arrival at setting	0, 1	0	Yes	–	R	–	R	S	1
	013	U2	Arrival at prediction	0, 1	0	Yes	–	R	–	R	S	1

List of tag ITEMs on CX-Process Monitor or SCADA software

The following tag ITEMs are used to specify ITEMs with either 1) Monitor tags when sending function blocks to the CX-Process Monitor from 1-Block/4-Block Send Terminal to Computer (Block Model 403/404) or 2) CSV tags from SCADA software when sending/receiving data to/from the CPU Unit using Receive All Blocks (Block Model 461)/Send All Blocks (Block Model 462). All tag ITEMs are fixed and cannot be changed.

ITEM	Data Name	CSV Tags in CX-Process Monitor	CSV Tags in SCADA Software
		Tag ITEM (fixed)	Tag ITEM (fixed)
000	Stop block operation command	None	MT_ST
003	Execution error display	None	ERR
007	Setting	SP	SP
008	Prediction (subtracted from setting)	PRESET	PRS
009	Count	PV	Y1
010	Run/stop command	S1	S1
012	Arrival at setting	U1	U1
013	Arrival at prediction	U2	U2

Note: Note that this function block cannot be sent by the 1-Block Send Terminal to Computer block (Block Model 403).

Block Model	Block Name	Block Address
<209>	Internal Switch	100 to 349

Outline

This function block is for inputting and temporarily storing contact signals, and is equivalent to Work Area (W) on a PLC (Programmable Controller). When CX-Process Tool is used, this Internal Switch is assigned to block address 349 as default, and is automatically created as "temporary storage" area. The Internal Switch in block address 349 is for system use only and cannot be used by the user. Use another block address if you need to use this function block.

•224 internal switches can be used in one of these Internal Switch blocks.

Note: When a cold start is performed, the temporary relay values that were held before output OFF or before running of the Loop Control Unit was stopped are cleared from memory. These values are held when a hot start is performed.

Function block applications

This function block can be used to accept interim results of Step Ladder Program operation in internal relays without writing them to specific "contact input" ITEMs in the Step Ladder Program block (Block Model 301).
Results can be output to this internal switch by output type commands such as OUT, and read by input type commands such as LOAD.

Block diagram

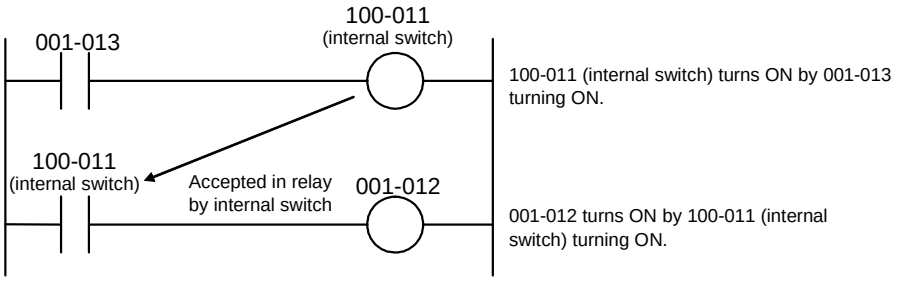

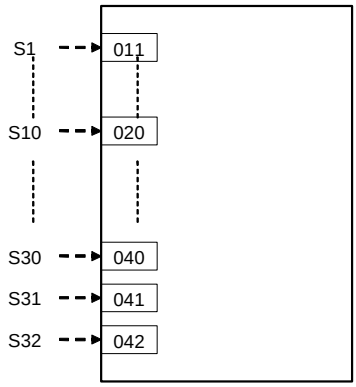

ITEM list

*1:On the CX-Process Monitor, the R/W mode is indicated in the Tuning screen or in the Control screen.

ITEM TYPE	ITEM	Symbol	Data Description	Data Range	Default	COLD start initialization	R/W Mode R: Read, W: Write, R/W: R/W-enabled, -: R/W-disabled Note: r and r/w: Read and read/write for validate action or monitor run status by CX-Process Tool or Monitor, (S): Initial setting data, (O): Operation data					Data Length (bytes)
							According to CX-Process Tool	According to CX-Process Monitor *1	According to ITEM Setting block	According to Step Ladder Program	Send/ Receive All Blocks	
Contact input	000		Stop block operation command (0: Cancel stop, 1: Stop)	0, 1	0	–	–	–	–	–	S/R	1
Parameter	001		Comment	23 characters	Block name	–	R/W(S)	–	–	–	–	24
	002		Block Model: Internal Switch	209	209	–	R/W(S)	–	–	–	–	2
Special	003		Execution error display 0: Normal, Other: Error (See Appendix "Execution Error Code List.")		0000	–	r	–	–	–	S	2
Parameter	004		Operation cycle (sec) 0: Common, 1: 0.1, 2: 0.2, 3: 0.5, 4: 1, 5: 2	0 to 5	0	–	R/W(S)	–	–	–	–	2
Contact input	011	S1	Internal switch	0, 1	0	Yes	R/W(O)	–	–	R/W	S/R	1
	to	to		to		Yes						
	020	S10	Internal switch	0, 1	0	Yes	R/W(O)	–	–	R/W	S/R	1
	to	to		to		Yes						
	040	S30	Internal switch	0, 1	0	Yes	R/W(O)	–	–	R/W	S/R	1
	041*1	S31	Internal switch	0, 1	0	Yes	R/W(O)	–	–	R/W	S/R	1
	to	to		to		Yes						
	234*1	S224	Internal switch	0, 1	0	–	R/W(O)	–	–	R/W	S/R	1

*1: These ITEMs were added in Loop Control Unit Ver. 2.00.

List of tag ITEMs on SCADA software

The following tag ITEMs are used to specify ITEMs with CSV tags from SCADA software when sending/receiving data to/from the CPU Unit using Receive All Blocks (model 461)/Send All Blocks (model 462). All tag ITEMs are fixed and cannot be changed.

ITEM	Data Name	CSV Tags in SCADA Software
		Tag ITEM (fixed)
000	Stop block operation command	MT_ST
003	Execution error display	ERR
011 to 026	S1 to S16 internal switch	S1 to S16
027 to 042	S17 to S32 internal switch	S17 to S32
043 to 058	S33 to S48 internal switch	S33 to S48
059 to 074	S49 to S64 internal switch	S49 to S64
075 to 090	S65 to S80 internal switch	S65 to S80
091 to 106	S81 to S96 internal switch	S81 to S96
107 to 122	S97 to S112 internal switch	S97 to S112
123 to 138	S113 to S128 internal switch	S113 to S128
139 to 154	S129 to S144 internal switch	S129 to S144
155 to 170	S145 to S160 internal switch	S145 to S160
171 to 186	S161 to S176 internal switch	S161 to S176
187 to 202	S177 to S192 internal switch	S177 to S192
203 to 218	S193 to S208 internal switch	S193 to S208
219 to 234	S209 to S224 internal switch	S209 to S224

Block Model	Block Name	Block Address
<210>	Level Check	100 to 349

Outline

Each analog input is checked against eight levels and the contact corresponding to the level is output. The level number is also output at an analog value at the same time.
*Eight levels per block are checked.
*Hysterisis can be set for each level.
*A series connection of multiple blocks (using wiring outputs) enables checking of nine or more levels.

Function block applications

Combined with an ITEM write block (connecting a contact output to an ITEM Write block in response to level), this function can be used to change other block ITEMs in response to analog data levels.
Example: Changing the proportional band of a PID block in response to temperature levels (from this block to an ITEM Write block for constants to changing the proportional band of a basic PID block).

Block diagram

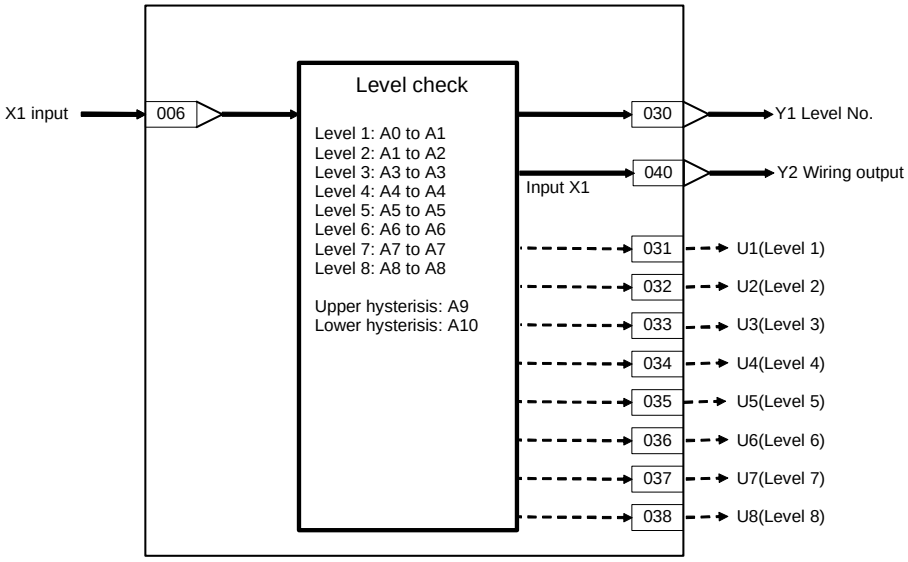

ITEM list

*1:On the CX-Process Monitor, the R/W mode is indicated in the Tuning screen or in the Control screen.

ITEM TYPE	ITEM	Symbol	Data Description	Data Range	Default	COLD start initialization	R/W Mode R: Read, W: Write, R/W: R/W-enabled, -: R/W-disabled Note: r and r/w: Read and read/write for validate action or monitor run status by CX-Process Tool or Monitor, (S): Initial setting data, (O): Operation data					Data Length (bytes)
							According to CX-Process Tool	According to CX-Process Monitor *1	According to ITEM Setting block	According to Step Ladder Program	Send/ Receive All Blocks	
Contact input	000		Stop block operation command (0: Cancel stop, 1: Stop)	0, 1	0	–	–	–	–	–	S/R	1
Parameter	001		Comment	23 characters	Block name	–	R/W(S)	–	–	–	–	24
	002		Block Model: Level Check	210	210	–	R/W(S)	–	–	–	–	2
Special	003		Execution error display 0: Normal, Other: Error (See Appendix "Execution Error Code List.")		0000	–	r	–	–	–	S	2
Parameter	004		Operation cycle (sec) 0: Common, 1: 0.1, 2: 0.2, 3: 0.5, 4: 1, 5: 2	0 to 5	0	–	R/W(S)	–	–	–	–	2

Input

*1:On the CX-Process Monitor, the R/W mode is indicated in the Tuning screen or in the Control screen.

ITEM TYPE	ITEM	Symbol	Data Description	Data Range	Default	COLD start initialization	R/W Mode R: Read, W: Write, R/W: R/W-enabled, -: R/W-disabled Note: r and r/w: Read and read/write for validate action or monitor run status by CX-Process Tool or Monitor, (S): Initial setting data, (O): Operation data					Data Length (bytes)
							According to CX-Process Tool	According to CX-Process Monitor *1	According to ITEM Setting block	According to Step Ladder Program	Send/ Receive All Blocks	
Analog input wiring information	006		X1 source destination BBB: Block address, III: ITEM No.	BBBIII	000000	–	R/W(S)	–	–	–	–	4
Analog input	007	X1	Input	±320.00%	0.00	Yes	r	–	–	–	S	2

Level check boundaries

*1:On the CX-Process Monitor, the R/W mode is indicated in the Tuning screen or in the Control screen.

ITEM TYPE	ITEM	Symbol	Data Description	Data Range	Default	COLD start initialization	R/W Mode R: Read, W: Write, R/W: R/W-enabled, -: R/W-disabled Note: r and r/w: Read and read/write for validate action or monitor run status by CX-Process Tool or Monitor, (S): Initial setting data, (O): Operation data					Data Length (bytes)
							According to CX-Process Tool	According to CX-Process Monitor *1	According to ITEM Setting block	According to Step Ladder Program	Send/ Receive All Blocks	
Parameter	010	A0	Lower limit	±320.00%	-320.00	–	R/W(O)	–	W	–	S/R	2
	011	A1	Level 1 upper limit	±320.00%	320.00	–	R/W(O)	–	W	–	S/R	2
	012	A2	Level 2 upper limit	±320.00%	320.00	–	R/W(O)	–	W	–	S/R	2
	013	A3	Level 3 upper limit	±320.00%	320.00	–	R/W(O)	–	W	–	S/R	2
	014	A4	Level 4 upper limit	±320.00%	320.00	–	R/W(O)	–	W	–	S/R	2
	015	A5	Level 5 upper limit	±320.00%	320.00	–	R/W(O)	–	W	–	S/R	2
	016	A6	Level 6 upper limit	±320.00%	320.00	–	R/W(O)	–	W	–	S/R	2
	017	A7	Level 7 upper limit	±320.00%	320.00	–	R/W(O)	–	W	–	S/R	2
	018	A8	Level 8 upper limit	±320.00%	320.00	–	R/W(O)	–	W	–	S/R	2
	019	A9	Upper hysterisis	0 to 320.00%	1.00	–	R/W(O)	–	W	–	S/R	2
	020	A10	Lower hysterisis	0 to 320.00%	1.00	–	R/W(O)	–	W	–	S/R	2

Level check results

*1:On the CX-Process Monitor, the R/W mode is indicated in the Tuning screen or in the Control screen.

ITEM TYPE	ITEM	Symbol	Data Description	Data Range	Default	COLD start initialization	R/W Mode R: Read, W: Write, R/W: R/W-enabled, -: R/W-disabled Note: r and r/w: Read and read/write for validate action or monitor run status by CX-Process Tool or Monitor, (S): Initial setting data, (O): Operation data					Data Length (bytes)
							According to CX-Process Tool	According to CX-Process Monitor *1	According to ITEM Setting block	According to Step Ladder Program	Send/ Receive All Blocks	
Analog output	030	Y1	Level No. (0: out of range)	0 to 8	0	Yes	–	–	–	–	S	2
Contact output	031	U1	Level 1 (A0 < X1 ≤A1)	0, 1	0	Yes	–	–	–	R	S	1
	032	U2	Level 2 (A1 < X1 ≤A2)	0, 1	0	Yes	–	–	–	R	S	1
	033	U3	Level 3 (A2 < X1 ≤A3)	0, 1	0	Yes	–	–	–	R	S	1
	034	U4	Level 4 (A3 < X1 ≤A4)	0, 1	0	Yes	–	–	–	R	S	1
	035	U5	Level 5 (A4 < X1 ≤A5)	0, 1	0	Yes	–	–	–	R	S	1
	036	U6	Level 6 (A5 < X1 ≤A6)	0, 1	0	Yes	–	–	–	R	S	1
	037	U7	Level 7 (A6 < X1 ≤A7)	0, 1	0	Yes	–	–	–	R	S	1
	038	U8	Level 8 (A7 < X1 ≤A8)	0, 1	0	Yes	–	–	–	R	S	1
Analog output	040	Y2	Wiring output (input value X1 output unchanged)	±320.00%	0.00	Yes	r	–	–	–	–	2

Note1: Level upper limit (A1 to A8) setting

Set the upper limit so that A0 ≤ A1 ≤ A2 ≤ A3 ≤ A4 ≤ A5 ≤ A6 ≤ A7 ≤ A8. The reason for this is that, with a setting like A0 ≤ A1 ≤ A2 ≤ A3 > A4, the level check will proceed in the order A0, A1, A2...A8, making A4 and subsequent settings invalid. This would result in an execution error (error code 71: inappropriate parameter) for X1 > A4, and the output would be treated as out of range (Y1 = 0, U1 to U8 = 0).

When equal values are included, such as A0 < A1 = A2 = A3 < A4 < A5..., they will be ignored (in this case A2 and A3), but this will not result in an execution error.

Note2: Hysterisis

The level check is equipped with hysterisis to prevent chattering in ongoing level checks due to the oscillation of the X1 input.

For example, in an operation cycle where X1 is positioned at level 3 with A2 < X1 ≤ A3, the level check of the next operation cycle determines whether X1 is within the lower hysterisis (A2 – lower hysterisis value) and upper hysterisis (A3 + upper hysterisis value) range. Thus, even if (A2 – lower hysterisis value) < X1 ≤ A2, level 2 (U2) will not be set to 1 (ON) and level 3 (U3) will remain set to 1 (ON). Similarly, even if A3 < X1 ≤ (A3 + upper hysterisis value), level 4 (U4) will not be set to 1 (ON) and level 3 (U3) will remain set to 1 (ON).

Example

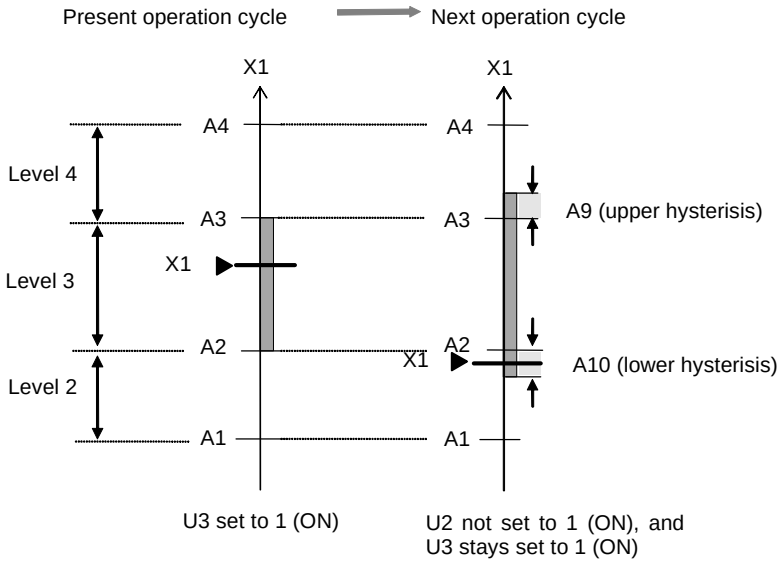

Note3: Y2 wiring output

Wiring with the Y2 wiring output differs from simple X1 input branching, because it can be used to prevent operations, due to hysterisis, where different levels turn ON simultaneously.

Reference:

By linking the level settings of several function blocks, nine or more levels can be achieved. To do this, set as follows:

1. Connect the Y2 wiring output of the first function block to X1 input of the second function block.
2. Set A8 of the first function block and A0 of the second function block to the same value.
3. Set the upper hysterisis between the first and second function blocks to the same value.
4. Set the block address for the second function block to a higher value than the block address for the first function block.
5. Set the operation cycle of the first and second function blocks to the same value.

List of tag ITEMS on SCADA software

The following tag ITEMs are used to specify ITEMs with CSV tags from SCADA software when sending/receiving data to/from the CPU Unit using Receive All Blocks (model 461)/Send All Blocks (model 462). All tag ITEMs are fixed and cannot be changed.

ITEM	Data Name	CSV Tags in SCADA Software
		Tag ITEM (fixed)
000	Stop block operation command	MT_ST
003	Execution error display	ERR
007	Input	X1
010	Lower limit	A0
011	Level 1 upper limit	A1
012	Level 2 upper limit	A2
013	Level 3 upper limit	A3
014	Level 4 upper limit	A4
015	Level 5 upper limit	A5
016	Level 6 upper limit	A6
017	Level 7 upper limit	A7
018	Level 8 upper limit	A8
019	Upper hysterisis	A9
020	Lower hysterisis	A10
030	Level No.	Y1
031	Level 1	U1
032	Level 2	U2
033	Level 3	U3
034	Level 4	U4
035	Level 5	U5
036	Level 6	U6
037	Level 7	U7
038	Level 8	U8

Block Model	Block Name	Block Address
<221>	ON/OFF Valve Manipulator	100 to 349

Outline

This function block manipulates and monitors ON/OFF valves with open/close limit switches.

•Provided with a valve action time error detection function (The contact state is output as a valve action time error unless the limit switch turns ON after a fully close or open operation.)
•Provided with a site manipulation switch input function (This switch enables input of either valve manipulation from the site or from a central Loop Control Unit. Manipulation output is turned OFF when valve manipulation is input from the site.)
•Provided with an Auto/Manual switching function (When set to Auto, the input is taken as the manipulation output, and when set to Manual, the internal specified state is taken as the manipulation output.
•Provided with a valve open midway output function (When the limit switches for detecting valve fully open or closed are both OFF, the valve state is regarded as valve open midway and the output contact is turned ON.)
•When switching from Auto to Manual, the manual input is matched to the value of the auto input immediately prior to switching (supported from version 2.50 of the Loop Control Unit).
•When the site manipulation switch is switched from ON (site) to OFF (central), the operation is forced to manual. At the same time, the manual input is matched to the value of the limit switch open/close input immediately prior to switching, in order to maintain actual site conditions (supported from version 2.50 of the Loop Control Unit).

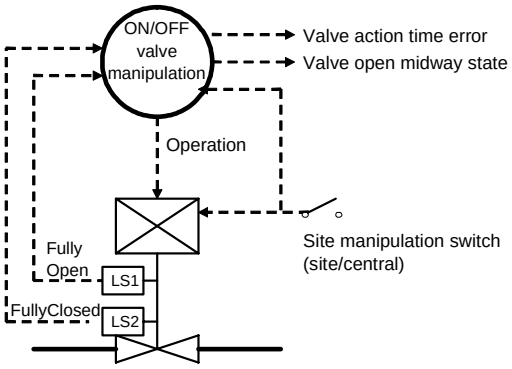

Function block applications

Manipulation of pneumatic-operated valves and motor-operated valves

Block diagram

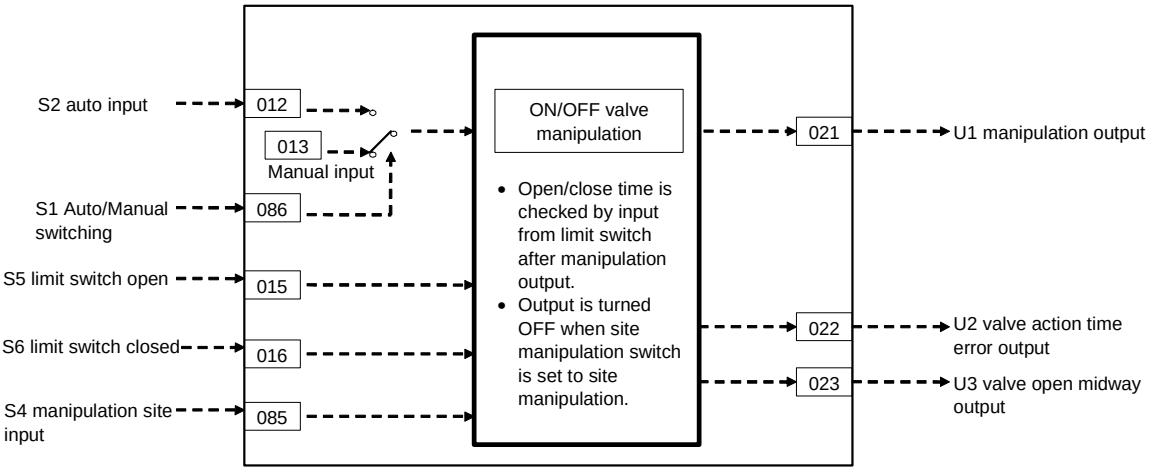

ITEM list

*1:On the CX-Process Monitor, the R/W mode is indicated in the Tuning screen or in the Control screen.

ITEM TYPE	ITEM	Symbol	Data Description	Data Range	Default	COLD start initialization	R/W Mode R: Read, W: Write, R/W: R/W-enabled, -: R/W-disabled Note: r and r/w: Read and read/write for validate action or monitor run status by CX-Process Tool or Monitor, (S): Initial setting data, (O): Operation data					Data Length (bytes)
							According to CX-Process Tool	According to CX-Process Monitor *1	According to ITEM Setting block	According to Step Ladder Program	Send/Receive All Blocks	
Contact input	000		Stop block operation command (0: Cancel stop, 1: Stop)	0, 1	0	–	–	–	–	–	S/R	1
Parameter	001		Comment	23 characters	Block name	–	R/W(S)	–	–	–	–	24
	002		Block Model: ON/OFF valve manipulator	221	221	–	R/W(S)	–	–	–	–	2
Special	003		Execution error display 0: Normal, Other: Error (See Appendix "Execution Error Code List")		0000	–	r	–	–	–	S	2
Parameter	004		Operation cycle (s) 0: Common, 1: 0.1, 2: 0.2, 3: 0.5, 4: 1, 5: 2	0 to 5	0	–	R/W(S)	–	–	–	–	2
Parameter	006		Open limit switch (0: Used, 1: Not used) Note: When set to 0, open limit switch input (ITEM015) turns 0 (OFF).	0, 1	1	–	R/W(S)	–	–	–	–	1
	007		Open time setting Note: This setting is enabled when open limit switch (ITEM006) is set to 1.	0 to 32000s	5	–	R/W(O)	–	W	–	S/R	2
Parameter	008		Close limit switch (0: Used, 1: Not used) Note: When set to 0, close limit switch input (ITEM016) turns 0 (OFF).	0, 1	1	–	R/W(S)	–	–	–	–	1
	009		Close time setting Note: This setting is enabled when close limit switch (ITEM008) is set to 1.	0 to 32000s	5	–	R/W(O)	–	W	–	S/R	2
Parameter	010		Valve action direction 0: Forward (close at power ON) 1: Reverse (open at power ON)	0, 1	1	–	R/W(S)	–	–	–	–	1
Contact input	012	S2	Auto input	0, 1	0	Yes	–	R	–	R/W	S	1
Contact input/parameter	013	S3	Manual input	0, 1	0	Yes	R/W(O)	R/W	–	R/W	S/R	1
Contact input	015	S5	Open limit switch input 0: Open limit switch OFF 1: Open limit switch ON Note: This setting becomes 0 when ITEM006 (open limit switch) is set to 0.	0, 1	0	Yes	–	R	–	R/W	S	1

*1:On the CX-Process Monitor, the R/W mode is indicated in the Tuning screen or in the Control screen.

ITEM TYPE	ITEM	Symbol	Data Description	Data Range	Default	COLD start initialization	R/W Mode R: Read, W: Write, R/W: R/W-enabled, -: R/W-disabled Note: r and r/w: Read and read/write for validate action or monitor run status by CX-Process Tool or Monitor, (S): Initial setting data, (O): Operation data					Data Length (bytes)
							According to CX-Process Tool	According to CX-Process Monitor *1	According to ITEM Setting block	According to Step Ladder Program	Send/ Receive All Blocks	
	016	S6	Close limit switch input 0: Close limit switch OFF 1: Close limit switch ON Note: This setting becomes 0 when ITEM008 (close limit switch) is set to 0.	0, 1	0	Yes	–	R	–	R/W	S	1
Contact output□□	021	U1	Manipulation output	0, 1	0	Yes	–	R	–	R	S	1
	022	U2	Valve action time error (1: Error)	0, 1	0	Yes	–	R	–	R	S	1
	023	U3	Valve open midway (1: Open midway)	0, 1	0	Yes	–	R	–	R	S	1
Contact input	085	S4	Site manipulation switch input (1: Site, 0: Central) *1 Note: When 1 (Site) is input, ITEM021 (Manipulation output) turns 0, and ITEM022 (Valve action time error) and ITEM023 (Valve open midway) turn 0.	0, 1	0	Yes	–	R	–	R/W	S	1
Contact input/parameter	086	S1	Auto/Manual switching*2 0: Manual, 1: Auto	0, 1	0	Yes	R/W(O)	R/W	–	R/W	S/R	1
Parameter	099		Label	0 to 15	0	Yes	R/W(O)	R/W	W	–	S/R	2

*1: When the S4 manipulation site input switch is switched from 1 (site) to 0 (central), the value of auto/manual switching (ITEM 086) is forced to 0 (Man) and the U1 manipulation output is set as follows. (Supported from version 2.50 of the Loop Control Unit.)
When the S5 open limit switch input is set to 1 (open) immediately prior to switching, ITEM 013 (manual input) will be 1 and U1 manipulation output will be1.
When the S6 close limit switch input is set to 1 (close) immediately prior to switching, ITEM 013 (manual input) will be 0 and U1 manipulation output will be 0.
When the S5 open limit switch input and S6 close limit switch input are both set to 1 or both set to 0 immediately prior to switching, if ITEM 010 (valve action direction) is 1 (reverse), U1 manipulation output will be 0. Similarly, if ITEM 010 (valve action direction) is 0 (forward), U1 manipulation output will be 1.

*2: When S1 auto/manual switching is changed from Auto to Manual, the value of ITEM 012 (auto input) is automatically transferred to ITEM 013 (manual input). This results in a manual state with the manual input matched to the value of the auto input immediately prior to switching. (Supported from version 2.50 of the Loop Control Unit.)

List of tag ITEMs on CX-Process Monitor or SCADA software

The following tag ITEMs are used to specify ITEMs with either 1) Monitor tags when sending function blocks to the CX-Process Monitor from 1-Block/4-Block Send Terminal to Computer (Block Model 403/404) or 2) CSV tags from SCADA software when sending/receiving data to/from the CPU Unit using Receive All Blocks (Block Model 461)/Send All Blocks (Block Model 462). All tag ITEMs are fixed and cannot be changed.

ITEM	Data Name	CSV Tags in CX-Process Monitor	CSV Tags in SCADA Software
		Tag ITEM (fixed)	Tag ITEM (fixed)
000	Stop block operation command (0: Cancel stop, 1: Stop)	None	MT_ST
003	Execution error display	None	ERR
007	Open time setting	None	TO
009	Close time setting	None	TC
012	Auto input	S2	S2
013	Manual input	S3	S3
015	Open limit switch input	S5	S5
016	Close limit switch input	S6	S6
021	Manipulation output	U1	U1
022	Valve action time error	U2	U2
023	Valve open midway	U3	U3
085	Site manipulation switch input	S4	S4
086	Auto/Manual switching	S1	S1
099	Label	OP_MK	OP_MK

Note Note that this function block cannot be sent by the 1-Block Send Terminal to Computer block (Block Model 403).

Block Model	Block Name	Block Address
<222>	Motor Manipulator	100 to 349

Outline

This function block manipulates and monitors motor operation.

•Provided with a site manipulation switch input (This switch enables input of either motor manipulation from the site or from a central Loop Control Unit. Manipulation output is turned OFF when motor manipulation is input from the site.)
•Provided with an Auto/Manual switching function (When set to Auto, the input is taken as the manipulation output, and when set to Manual, the internal specified state is taken as the manipulation output.
•Provided with a motor answer error alarm (The contact state is output as an error if the answer contact input is OFF for the answer check time or longer during execution of the manipulation ON command on the motor.)
•Provided with a CT input high alarm output (The contact state is output as an error when the CT input from the CT converter is the setting value or higher.)
•When switching from Auto to Manual, the manual input is matched to the value of the auto input immediately prior to switching (supported from version 2.50 of the Loop Control Unit).
•When the site manipulation switch is switched from ON (site) to OFF (central), the operation is forced to manual. At the same time, the manual input is matched to the value of the answer input immediately prior to switching, in order to maintain actual site conditions (supported from version 2.50 of the Loop Control Unit).

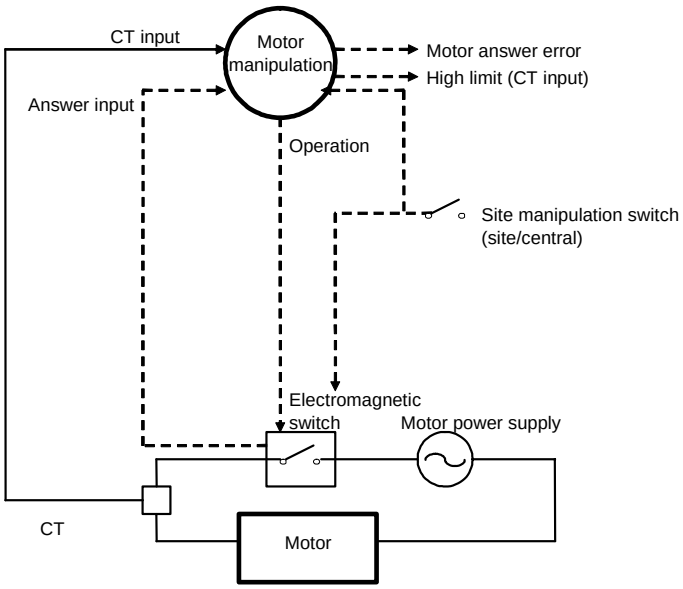

Function block applications

Manipulation of motors on pumps, stirrer, conveyors, etc.

Block diagram

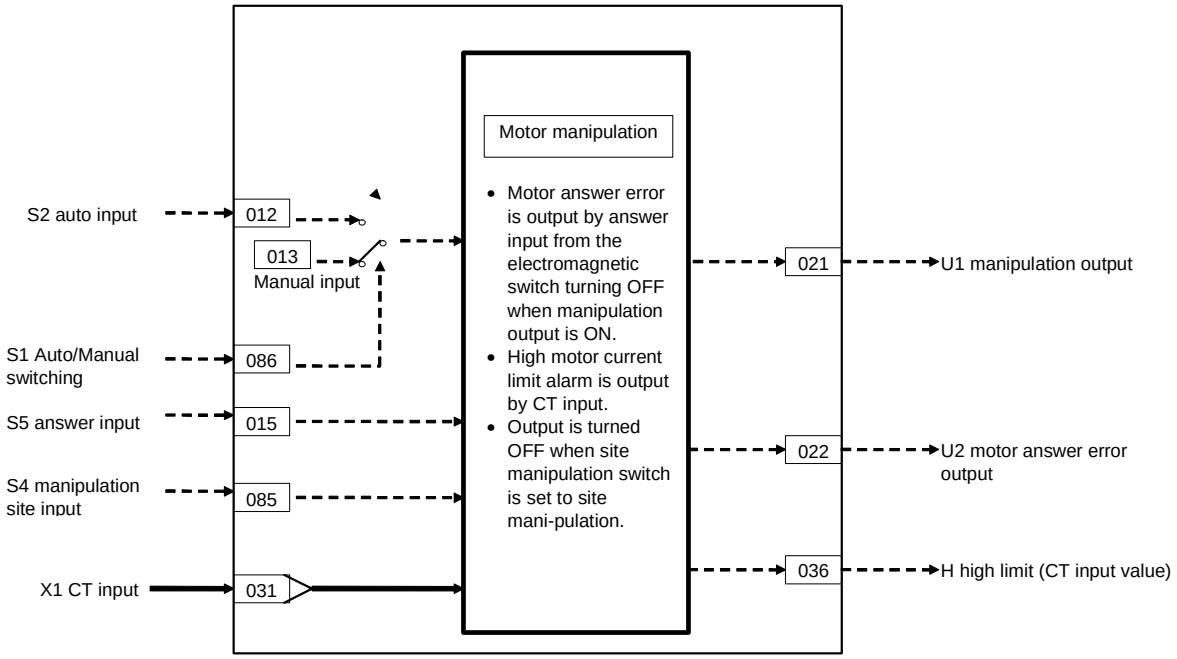

ITEM list

*1:On the CX-Process Monitor, the R/W mode is indicated in the Tuning screen or in the Control screen.

ITEM TYPE	ITEM	Symbol	Data Description	Data Range	Default	COLD start initialization	R/W Mode R: Read, W: Write, R/W: R/W-enabled, -: R/W-disabled Note: r and r/w: Read and read/write for validate action or monitor run status by CX-Process Tool or Monitor, (S): Initial setting data, (O): Operation data					Data Length (bytes)
							According to CX-Process Tool	According to CX-Process Monitor *1	According to ITEM Setting block	According to Step Ladder Program	Send/ Receive All Blocks	
Contact input	000		Stop block operation command (0: Cancel stop, 1: Stop)	0 to 1	0	–	–	–	–	–	S/R	1
Parameter	001		Comment	23 characters	Block name	–	R/W(S)	–	–	–	–	24
	002		Block Model: Motor Manipulator	222	222	–	R/W(S)	–	–	–	–	2
Special	003		Execution error display 0: Normal, Other: Error (See Appendix "Execution Error Code List")		0000	–	r	–	–	–	S	2
Parameter	004		Operation cycle (s) 0: Common, 1: 0.1, 2: 0.2, 3: 0.5, 4: 1, 5: 2	0 to 5	0	–	R/W(S)	–	–	–	–	2
Parameter	006		Answer check time (unit: s)	1 to 8s	3	–	R/W(S)	–	–	–	S/R	2
Contact input	012	S2	Auto input	0 to 1	0	Yes	–	R	–	R/W	S	1
Parameter	013	S3	Manual input	0 to 1	0	Yes	R/W(O)	R/W	–	R/W	S/R	1
Contact input	015	S5	Answer input 0: OFF, 1: ON	0 to 1	0	Yes	–	R	–	R/W	S	1
Contact output	021	U1	Manipulation output	0 to 1	0	Yes	–	R	–	R	S	1
	022	U2	Answer error (1: Error, 0: Normal) Note: When manipulation output (ITEM021) is 1, an error is assumed if answer input (ITEM015) stays 0 for the answer check time (ITEM006) or longer. If answer input (ITEM015) turns 1 after an error is assumed (1), the state is assumed to normal and this setting returns to 0.	0 to 1	0	Yes	–	R	–	R	S	1

CT input alarm

*1:On the CX-Process Monitor, the R/W mode is indicated in the Tuning screen or in the Control screen.

ITEM TYPE	ITEM	Symbol	Data Description	Data Range	Default	COLD start initialization	R/W Mode R: Read, W: Write, R/W: R/W-enabled, -: R/W-disabled Note: r and r/w: Read and read/write for validate action or monitor run status by CX-Process Tool or Monitor, (S): Initial setting data, (O): Operation data					Data Length (bytes)
							According to CX-Process Tool	According to CX-Process Monitor *1	According to ITEM Setting block	According to Step Ladder Program	Send/ Receive All Blocks	
Analog input connection information	031		X1 source designation BBB: Block address, III: ITEM No.	BBBIII	000000	–	R/W(S)	–	–	–	–	4
Analog input	032	X1	CT input	±320.00%	0.00	Yes	r	R	–	–	S	2
Parameter	033		CT input high alarm setting	±320.00%	100.00	–	R/W(O)	R	W	–	S/R	2
	035		Hysteresis setting	0 to 320.00%	1.00	–	R/W(O)	–	W	–	S/R	2
Contact output	036	H	CT input high alarm output Note: Alarm output is functional even if site manipulation switch input (ITEM085) is set to 1 (Site).	0 to 1	0	Yes	–	R	–	R	S	1
Contact input	085	S4	Site manipulation switch input*1 (1: Site, 0: Central) Note: When 1 (Site) is input, both manipulation output (ITEM021) and motor answer output (ITEM022) turn 0.	0 to 1	0	Yes	–	R	–	R/W	S	1
Contact input/para-meter	086	S1	Auto/Manual switching*2 0: Manual, 1: Auto	0 to 1	0	Yes	R/W(O)	R/W	–	R/W	S/R	1

*1: When the S4 manipulation site input switch is switched from 1 (site) to 0 (central), the value of auto/manual switching (ITEM 086) is forced to 0 (Man) and the value of ITEM 015 (answer input) is automatically transferred to ITEM 013 (manual input). This results in a manual state with the manual input matched to the value of the auto input immediately prior to switching. (Supported from version 2.50 of the Loop Control Unit.)

*2: When S1 auto/manual switching is switched from Auto to Manual, the value of ITEM 012 (auto input) is automatically transferred to ITEM 013 (manual input). This results in a manual state with the manual input matched to the value of the auto input immediately prior to switching. (Supported from version 2.50 of the Loop Control Unit.)

Data for host display

*1:On the CX-Process Monitor, the R/W mode is indicated in the Tuning screen or in the Control screen.

ITEM TYPE	ITEM	Symbol	Data Description	Data Range	Default	COLD start initialization	R/W Mode R: Read, W: Write, R/W: R/W-enabled, -: R/W-disabled Note: r and r/w: Read and read/write for validate action or monitor run status by CX-Process Tool or Monitor, (S): Initial setting data, (O): Operation data					Data Length (bytes)
							According to CX-Process Tool	According to CX-Process Monitor *1	According to ITEM Setting block	According to Step Ladder Program	Send/ Receive All Blocks	
Parameter	099		Label	0 to 15	0	Yes	R/W(O)	R/W	W	–	S/R	2

List of tag ITEMs on CX-Process Monitor or SCADA software

The following tag ITEMs are used to specify ITEMs with either 1) Monitor tags when sending function blocks to the CX-Process Monitor from 1-Block/4-Block Send Terminal to Computer (Block Model 403/404) or 2) CSV tags from SCADA software when sending/receiving data to/from the CPU Unit using Receive All Blocks (Block Model 461)/Send All Blocks (Block Model 462). All tag ITEMs are fixed and cannot be changed.

ITEM	Data Name	CSV Tags in CX-Process Monitor	CSV Tags in SCADA Software
		Tag ITEM (fixed)	Tag ITEM (fixed)
000	Stop block operation command	None	MT_ST
003	Execution error display	None	ERR
006	Answer check time	None	ANS
012	Auto input	S2	S2
013	Manual input	S3	S3
015	Answer input	S5	S5
021	Manipulation output	U1	U1
022	Answer error	U2	U2
032	CT input	X1	X1
033	CT input high alarm setting	H_SP	H_SP
035	Hysteresis setting	None	HS
036	CT input high alarm output	None	CTH
085	Site manipulation switch input	OP_MK	S4
086	Auto/Manual switching	None	S1
099	Label	None	OP_MK

Note Note that this function block cannot be sent by the 1-Block Send Terminal to Computer block (Block Model 403).

Block Model	Block Name	Block Address
<223>	Reversible Motor Manipulator	100 to 349

Outline

Manipulates and monitors reversible motor operation.

•Manipulation commands can be specified in both the forward and reverse directions for a reversible motor.
•Provided with a site manipulation switch input (This switch enables input of either motor manipulation from the site or from a central Loop Control Unit. Manipulation output is turned OFF when motor manipulation is input from the site.)
•Provided with an Auto/Manual switching function (When set to Auto in regular operation, the input is taken as the manipulation output, and when set to Manual, the internal specified state is taken as the manipulation output.)
•Provided with a motor answer error alarm (The contact state is output as an error if the FWD or REV answer contact input is OFF for the answer check time or longer during execution of the FWD or REV manipulation ON command on the motor.)
•Provided with a CT input high alarm output (The contact state is output as an error when the CT input from the CT converter is the setting value or higher.)
•When switching from Auto to Manual, the manual input is matched to the value of the auto input immediately prior to switching (supported from version 2.50 of the Loop Control Unit).
•When the site manipulation switch is switched from ON (site) to OFF (central), the operation is forced to manual. At the same time, the MAN-FWD and MAN-REV inputs are matched to the value FWD and REV answer inputs immediately prior to switching, in order to maintain actual site conditions (supported from version 2.50 of the Loop Control Unit).

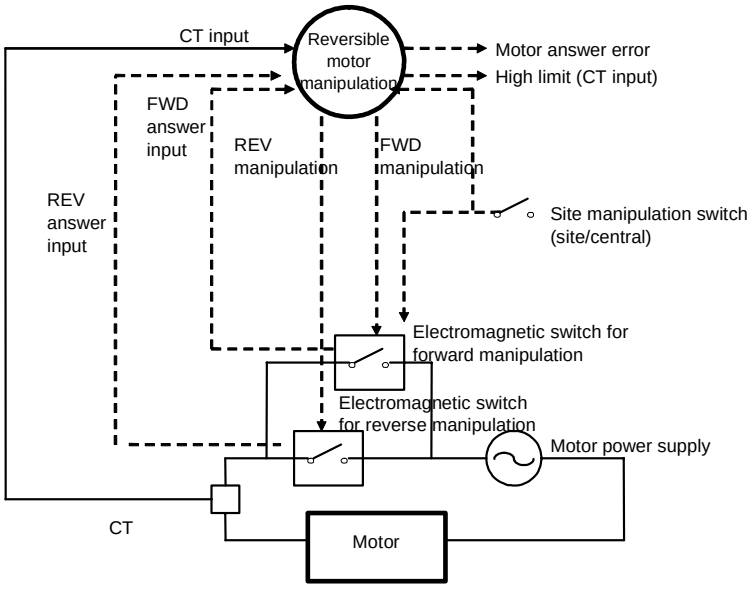

Function block applications

Manipulation of motors on conveyors, for example, that are continuously run in the forward and reverse directions

Block diagram

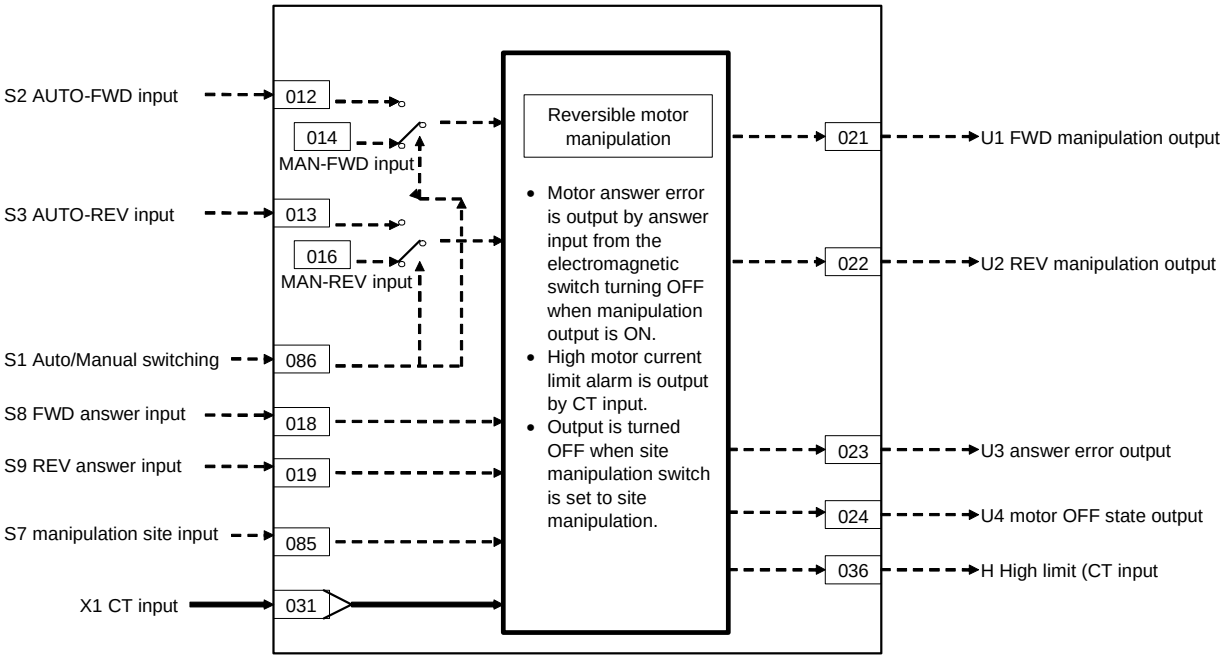

ITEMlist

*1:On the CX-Process Monitor, the R/W mode is indicated in the Tuning screen or in the Control screen.

ITEM TYPE	ITEM	Symbol	Data Description	Data Range	Default	COLD start initialization	R/W Mode R: Read, W: Write, R/W: R/W-enabled, -: R/W-disabled Note: r and r/w: Read and read/write for validate action or monitor run status by CX-Process Tool or Monitor, (S): Initial setting data, (O): Operation data					Data Length (bytes)
							According to CX-Process Tool	According to CX-Process Monitor *1	According to ITEMSetting block	According to Step Ladder Program	Send/ Receive All Blocks	
Contact input	000		Stop block operation command (0: Cancel stop, 1: Stop)	0, 1	0	–	–	–	–	–	S/R	1
Parameter	001		Comment	23 characters	Block name	–	R/W(S)	–	–	–	–	24
	002		Block Model: Reversible Motor Manipulator	223	223	–	R/W(S)	–	–	–	–	2
Special	003		Execution error display 0: Normal, Other: Error (See Appendix "Execution Error Code List")		0000	–	r	–	–	–	S	2
Parameter	004		Operation cycle (s) 0: Common, 1: 0.1, 2: 0.2, 3: 0.5, 4: 1, 5: 2	0 to 5	0	–	R/W(S)	–	–	–	–	2
Parameter	006		Answer check time (unit: s)	1 to 8	3	–	R/W(S)	–	–	–	S/R	2
	007		OFF time during FWD/REV switching (unit: s) Note: When FWD input (Auto or Manual) and REV input (Auto or Manual) both turn 0 (motor operation is stopped) to switch the direction of motor rotation, 0 continues for both FWD manipulation output (ITEM021) and REV manipulation output (ITEM022) for the time set here. After the time set here has elapsed, REV manipulation output (ITEM022) or FWD manipulation output (ITEM021) is switched to 1.*1	1 to 8	1	–	R/W(S)	–	–	–	S/R	2
Contact input	012	S2	AUTO-FWD input	0, 1	0	Yes	–	R	–	R/W	S	1
	013	S3	AUTO-REV input	0, 1	0	Yes	–	R	–	R/W	S	1
Parameter	014	S4	MAN-FWD input	0, 1	0	Yes	R/W(O)	R/W	–	R/W	S/R	1
	016	S6	MAN-REV input	0, 1	0	Yes	R/W(O)	R/W	–	R/W	S/R	1
Contact input	018	S8	FWD answer input 0: OFF 1: ON	0, 1	0	Yes	–	R	–	R/W	S	1
	019	S9	REV answer input 0: OFF 1: ON	0, 1	0	Yes	–	R	–	R/W	S	1
Contact output	021	U1	FWD manipulation output	0, 1	0	Yes	–	R	–	R	S	1
	022	U2	REV manipulation output	0, 1	0	Yes	–	R	–	R	S	1
	023	U3	Answer error (1: Error, 0: Normal) Note: An error is assumed when FWD manipulation output (ITEM021) or REV manipulation output (ITEM022) turns 1, and FWD answer input (ITEM018) or REV answer input (ITEM019) are 0 for answer check time (ITEM006) or longer. If FWD answer input (ITEM018) or REV answer input (ITEM019) turns 1 after an error is assumed (1), the state is assumed to normal and this setting returns to 0.	0, 1	0	Yes	–	R	–	R	S	1
	024	U4	Motor OFF state output (1: OFF)	0, 1	0	Yes	–	R	–	R	S	1

CT input alarm

*1:On the CX-Process Monitor, the R/W mode is indicated in the Tuning screen or in the Control screen.

ITEM TYPE	ITEM	Symbol	Data Description	Data Range	Default	COLD start initialization	R/W Mode R: Read, W: Write, R/W: R/W-enabled, -: R/W-disabled Note: r and r/w: Read and read/write for validate action or monitor run status by CX-Process Tool or Monitor, (S): Initial setting data, (O): Operation data					Data Length (bytes)
							According to CX-Process Tool	According to CX-Process Monitor *1	According to ITEMSetting block	According to Step Ladder Program	Send/ Receive All Blocks	
Analog input connection information	031		X1 source designation BBB: Block address, III: ITEMNo.	BBBIII	000000	–	R/W(S)	–	–	–	–	4
Analog input	032	X1	CT input	±320.00%	0.00	Yes	r	R	–	–	S	2
Parameter	033		CT input high alarm setting	±320.00%	100.00	–	R/W(O)	R	W	–	S/R	2
	035		Hysteresis setting	0 to 320.00%	1.00	–	R/W(O)	–	W	–	S/R	2
Contact output	036	H	CT input high alarm output Note: Alarm output is functional even if site manipulation switch input (ITEM085) is set to 1 (Site).	0, 1	0	Yes	–	R	–	R	S	1
Contact input	085	S7	Site manipulation switch input (1: Site, 1: Central) Note: When 1 (Site) is input, both FWD manipulation output (ITEM021) and REV manipulation output (ITEM022) turn 0.	0, 1	0	Yes	–	R	–	R/W	S	1
Contact input/Para-meter	086	S1	Auto/Manual switching 0: Manual, 1: Auto	0, 1	0	Yes	R/W(O)	R/W	–	R/W	S/R	1

*1: When FWD input (Auto or Manual) and REV input (Auto or Manual) have both become 0 even if the direction of motor operation has not been switched, the 0 state is continued for both FWD manipulation output (ITEM021) and REV manipulation output (ITEM022) for the duration of the time set at this ITEM.
Both FWD manipulation output (ITEM021) and REV manipulation output (ITEM022) turn 0 for the OFF time during FWD/REV switching (ITEM007) also when site manipulation switch input (ITEM085) is switched from 1 (site) to 0 (central).

*2: When the S4 manipulation site input switch is switched from 1 (site) to 0 (central), the value of auto/manual switching (ITEM086) is forced to 0 (Man), the value of ITEM018 (forward answer input) is automatically transferred to ITEM014 (manual-forward input), and the value of ITEM019 (reverse answer input) is automatically transferred to ITEM016 (manual-reverse input). This results in a manual state with the manual input matched to the value of the auto input immediately prior to switching. (Supported from version 2.50 of the Loop Control Unit.)

*3: When S1 auto/manual switching is switched from Auto to Manual, the value of ITEM012 (auto-forward input) is automatically transferred to ITEM014 (manual input) and the value of ITEM013 (auto-reverse input) is automatically transferred to ITEM016 (manual-reverse input). This results in a manual state with the manual input matched to the value of the auto input immediately prior to switching. (Supported from version 2.50 of the Loop Control Unit.)

Data for host display

*1:On the CX-Process Monitor, the R/W mode is indicated in the Tuning screen or in the Control screen.

ITEM TYPE	ITEM	Symbol	Data Description	Data Range	Default	COLD start initialization	R/W Mode R: Read, W: Write, R/W: R/W-enabled, -: R/W-disabled Note: r and r/w: Read and read/write for validate action or monitor run status by CX-Process Tool or Monitor, (S): Initial setting data, (O): Operation data					Data Length (bytes)
							According to CX-Process Tool	According to CX-Process Monitor *1	According to ITEMSetting block	According to Step Ladder Program	Send/ Receive All Blocks	
Parameter	099		Label	0 to 15	0	Yes	R/W(O)	R/W	W	–	S/R	2

List of tag ITEMs on CX-Process Monitor or SCADA software

The following tag ITEMs are used to specify ITEMs with either 1) Monitor tags when sending function blocks to the CX-Process Monitor from 1-Block/4-Block Send Terminal to Computer (Block Model 403/404) or 2) CSV tags from SCADA software when sending/receiving data to/from the CPU Unit using Receive All Blocks (Block Model 461)/Send All Blocks (Block Model 462). All tag ITEMs are fixed and cannot be changed.

ITEM	Data Name	CSV Tags in CX-Process Monitor	CSV Tags in SCADA Software
		Tag ITEM(fixed)	Tag ITEM(fixed)
000	Stop block operation command	None	MT_ST
003	Execution error display	None	ERR
006	Answer check time (unit: s)	None	ANS
007	OFF time during FWD/REV switching	None	OFT
012	AUTO-FWD input	S2	S2
013	AUTO-REV input	S3	S3
014	MAN-FWD input	S4	S4
016	MAN-REV input	S6	S6
018	FWD answer input	S8	S8
019	REV answer input	S9	S9
021	FWD manipulation output	U1	U1
022	REV manipulation output	U2	U2
023	Answer error	U3	U3
024	Motor OFF state output	U4	U4
032	CT input	X1	X1
033	CT input high alarm setting	H_SP	H_SP
035	Hysteresis setting	None	HS
036	Hysteresis setting	CTH	CTH
085	CT input high alarm output	S7	S7
086	Auto/Manual switching	S1	S1
099	Label	OP_MK	OP_MK

Note Note that this function block cannot be sent by the 1-Block Send Terminal to Computer block (Block Model 403).

Block Model	Block Name	Block Address
<224>	Motor Opening Manipulator	100 to 349

Outline

This function block inputs a target opening to manipulate an open/close instruction input type electric position-proportional motor. Combining this function block with other Control blocks (e.g. PID block) enables position-proportional control of electric motors.

- The MV value from a Control block (e.g. PID block) is input as an analog signal, and this is taken to be the motor opening setting value. The motor is controlled so that the motor opening is this target opening.
- The open/close commands (stop) are instructed to the motor as contact outputs, and the feedback signal (current opening) from the motor is received as analog signals to control motor opening.
- Provided with an Auto/Manual switching function (When set to Auto in regular operation, the input is taken as the target opening, and when set to Manual, the internal specified state is taken as the target opening.)
- Provided with a restart control time function (This prevents damage to the motor caused by frequent forward/reverse operation.)
- Provided with an opening input high/low limit alarm function (The state of the contact is output as an error when the feedback signal input from the opening oscillator is at the alarm setting or higher or lower.)
- When switching from Auto to Manual, the manual input is matched to the value of the auto input immediately prior to switching (supported from version 2.50 of the Loop Control Unit).
- When the site manipulation switch is switched from ON (site) to OFF (central), the operation is forced to manual. At the same time, the Manual input target opening setting is matched to the value of the Opening input immediately prior to switching, in order to maintain actual site conditions (supported from version 2.50 of the Loop Control Unit).

Function block

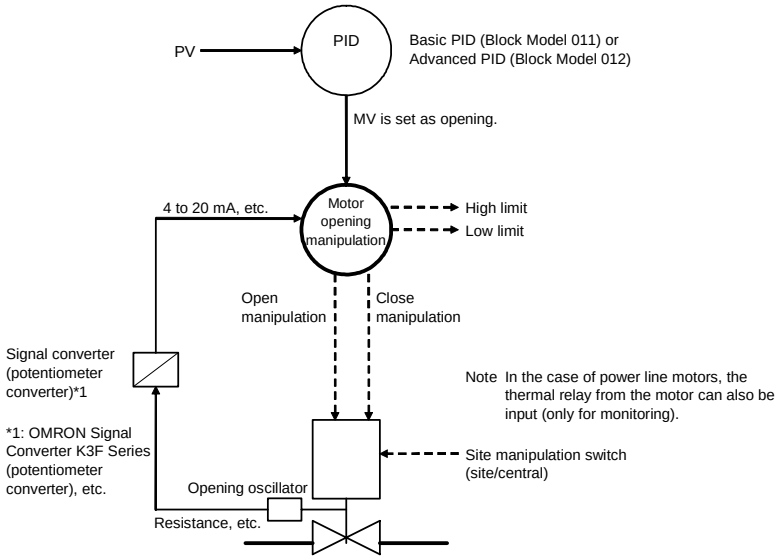

Function block application

Manipulation of an electric position-proportional motor

Block diagram

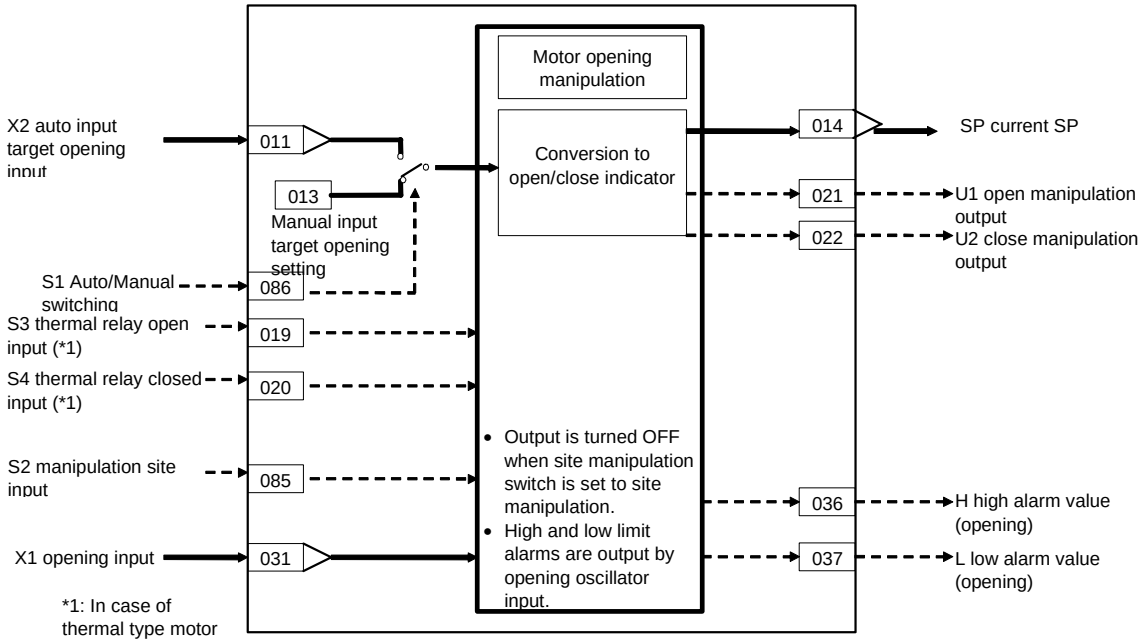

ITEM list

*1:On the CX-Process Monitor, the R/W mode is indicated in the Tuning screen or in the Control screen.

ITEM TYPE	ITEM	Symbol	Data Description	Data Range	Default	COLD start initialization	R/W Mode R: Read, W: Write, R/W: R/W-enabled, -: R/W-disabled Note: r and r/w: Read and read/write for validate action or monitor run status by CX-Process Tool or Monitor, (S): Initial setting data, (O): Operation data					Data Length (bytes)
							According to CX-Process Tool	According to CX-Process Monitor *1	According to ITEM Setting block	According to Step Ladder Program	Send/Receive All Blocks	
Contact input	000		Stop block operation command (0: Cancel stop, 1: Stop)	0, 1	0	–	–	–	–	–	S/R	1
Parameter	001		Comment	23 characters	Block name	–	R/W(S)	–	–	–	–	24
	002		Block Model: Motor Opening Manipulator	224	224	–	R/W(S)	–	–	–	–	2
Special	003		Execution error display 0: Normal, Other: Error (See Appendix "Execution Error Code List")		0000	–	r	–	–	–	S	2
Parameter	004		Operation cycle (s) 0: Common, 1: 0.1, 2: 0.2, 3: 0.5, 4: 1, 5: 2	0 to 5	0	–	R/W(S)	–	–	–	–	2

Target opening setting, open/close instruction output

*1:On the CX-Process Monitor, the R/W mode is indicated in the Tuning screen or in the Control screen.

ITEM TYPE	ITEM	Symbol	Data Description	Data Range	Default	COLD start initialization	R/W Mode R: Read, W: Write, R/W: R/W-enabled, -: R/W-disabled Note: r and r/w: Read and read/write for validate action or monitor run status by CX-Process Tool or Monitor, (S): Initial setting data, (O): Operation data					Data Length (bytes)
							According to CX-Process Tool	According to CX-Process Monitor *1	According to ITEM Setting block	According to Step Ladder Program	Send/ Receive All Blocks	
Analog input connection information	011		X2 source designation BBB: Block address, III: ITEM No.	BBBIII	000000	–	R/W(S)	–	–	–	–	4
Analog input	012	X2	Auto input target opening	±320.00%	0.00	Yes	r	–	–	–	S	2
Parameter	013		Manual input target opening setting	±320.00%	0.00	Yes	R/W(O)	W	W	–	R	2
Analog output	014	SP	Current SP output	±320.00%	0.00	Yes	r	R	–	–	S	2
Parameter	015	T1	Full-stroke time (unit: s) Note: Time required from fully closed to fully open.	0 to 999.9s	10.0	–	R/W(S)	–	–	–	S/R	2
	016	T2	Restart control time	0 to 999.9s	1.0	–	R/W(S)	–	–	–	S/R	2
Parameter	017		Dead-band	0 to 320.00%	1.00	–	R/W(S)	–	–	–	S/R	2
Contact input	019	S3	Open monitor switch thermal relay operation (1: ON) Note: Operation is mainly input when connected to thermal type motor. Operation is monitor only.	0, 1	0	Yes	–	R	–	R/W	S	1
	020	S4	Close monitor switch thermal relay operation (1: ON) Note: Operation is mainly input when connected to thermal type motor. Operation is monitor only.	0, 1	0	Yes	–	R	–	R/W	S	1
Contact output	021	U1	Open manipulation output	0, 1	0	Yes	–	R	–	R	S	1
	022	U2	Close manipulation output	0, 1	0	Yes	–	R	–	R	S	1

Opening feedback input

*1:On the CX-Process Monitor, the R/W mode is indicated in the Tuning screen or in the Control screen.

ITEM TYPE	ITEM	Symbol	Data Description	Data Range	Default	COLD start initialization	R/W Mode R: Read, W: Write, R/W: R/W-enabled, -: R/W-disabled Note: r and r/w: Read and read/write for validate action or monitor run status by CX-Process Tool or Monitor, (S): Initial setting data, (O): Operation data					Data Length (bytes)
							According to CX-Process Tool	According to CX-Process Monitor *1	According to ITEM Setting block	According to Step Ladder Program	Send/ Receive All Blocks	
Analog input connection information	031		X1 source designation BBB: Block address, III: ITEM No.	BBBIII	000000	–	R/W(S)	–	–	–	–	4
Analog input	032	X1	Opening input	±320.00%	0.00	Yes	r	R	–	–	S	2
Parameter	033		Opening input high limit alarm setting	±320.00%	100.00	–	R/W(O)	R	W	–	S/R	2
	034		Opening input low limit alarm setting	±320.00%	0.00	–	R/W(O)	R	W	–	S/R	2
	035		Hysteresis setting	0 to 320.00%	1.00	–	R/W(O)	–	W	–	S/R	2
Contact output	036	H	Opening input high limit alarm output	0, 1	0	Yes	–	R	–	R	S	1
	037	L	Opening input low limit alarm output	0, 1	0	Yes	–	R	–	R	S	1
Contact input	085	S2	Site manipulation switch input*1 (1: Site, 1: Central) Note: When 1 (Site) is input, open close manipulation output (ITEM021) close manipulation output (ITEM022) turn ON.	0, 1	0	Yes	–	R	–	R/W	S	1
Contact input/ parameter	086	S1	Auto/Manual switching*2 0: Manual, 1: Auto	0, 1	0	Yes	R/W(O)	R/W	–	R/W	S/R	1

*1: When the S2 manipulation site input switch is switched from 1 (site) to 0 (central), the value of auto/manual switching (ITEM 086) is forced to 0 (Man) and the value of ITEM 032 (opening input) is automatically transferred to ITEM 013 (Manual input target opening setting). This results in a manual state with the manual input matched to the value of the auto input immediately prior to switching. (Supported from version 2.50 of the Loop Control Unit.)

*2: When S1 auto/manual switching is switched from Auto to Manual, the value of ITEM 012 (auto input) is automatically transferred to ITEM 013 (manual input target opening setting). This results in a manual state with the manual input matched to the value of the auto input immediately prior to switching. (Supported from version 2.50 of the Loop Control Unit.)

Data for host display

*1:On the CX-Process Monitor, the R/W mode is indicated in the Tuning screen or in the Control screen.

ITEM TYPE	ITEM	Symbol	Data Description	Data Range	Default	COLD start initialization	R/W Mode R: Read, W: Write, R/W: R/W-enabled, -: R/W-disabled Note: r and r/w: Read and read/write for validate action or monitor run status by CX-Process Tool or Monitor, (S): Initial setting data, (O): Operation data					Data Length (bytes)
							According to CX-Process Tool	According to CX-Process Monitor *1	According to ITEM Setting block	According to Step Ladder Program	Send/ Receive All Blocks	
Parameter	099		Label	0 to 15	0	Yes	R/W(O)	R/W	W	–	S/R	2

Note: When both open manipulation output (ITEM021) and close manipulation output (ITEM022) both turn 0 for switching the direction of motor operation, the 0 state is continued for both open manipulation output (ITEM021) and close manipulation output (ITEM022) for the duration of the restart control time (ITEM16). Close manipulation output (ITEM022) and open manipulation output (ITEM021) actually turn 1 after the set time has elapsed.
When both open manipulation output (ITEM021) and close manipulation output (ITEM022) turn 0 (motor operation is stopped) even if the direction of motor operation is not switched, the 0 state is continued for both open manipulation output (ITEM021) and close manipulation output (ITEM022) for the duration of the restart control time (ITEM16).
Both open manipulation output (ITEM021) and close manipulation output (ITEM022) turn 0 for the duration of the restart control time (ITEM16) also when site manipulation switch input (ITEM085) is switched from 1 (site) to 0 (central).

Description of Operation

In the following description, the target deviation is "auto input target opening (manual input target opening setting) - opening input."
Opening input (ITEM032) is compared with auto input target opening (ITEM012) or manual input target opening setting (ITEM013). If the opening deviation is greater than 0, open manipulation output (ITEM021) is taken to be 1. If the opening deviation is smaller than 0, close manipulation output (ITEM022) is taken to be 1.
Note, however, that when the opening deviation is smaller than the dead band (ITEM017), both open manipulation output (ITEM021) and close manipulation output (ITEM022) are taken to be 0 to stop motor operation.
The open/close time is calculated by multiplying the full-stroke time (ITEM015) by opening deviation (1 when 100%).

List of tag ITEMs on CX-Process Monitor or SCADA software

The following tag ITEMs are used to specify ITEMs with either 1) Monitor tags when sending function blocks to the CX-Process Monitor from 1-Block/4-Block Send Terminal to Computer (Block Model 403/404) or 2) CSV tags from SCADA software when sending/receiving data to/from the CPU Unit using Receive All Blocks (Block Model 461)/Send All Blocks (Block Model 462). All tag ITEMs are fixed and cannot be changed.

ITEM	Data Name	CSV Tags in CX-Process Monitor	CSV Tags in SCADA Software
		Tag ITEM (fixed)	Tag ITEM (fixed)
000	Stop block operation command	None	MT_ST
003	Execution error display	None	ERR
012	Auto input target opening	None	X2
013	Manual input target opening setting	None	SP
014	Current SP output	SP	SP
015	Full-stroke time.	None	T1
016	Restart control time	None	T2
017	Dead-band	None	DB
019	Open monitor switch thermal relay operation	S3	S3
020	Close monitor switch thermal relay operation	S4	S4
021	Open manipulation output	U1	U1
022	Close manipulation output	U2	U2
032	Opening input	X1	X1
033	Opening input high limit alarm setting	None	H_SP
034	Opening input low limit alarm setting	None	L_SP
035	Hysteresis setting	None	HS
036	Opening input high limit alarm output	H	H
037	Opening input low limit alarm output	L	L
085	Site manipulation switch input	S2	S2
086	Auto/Manual switching	S1	S1
099	Label	OP_MK	OP_MK

Note Note that this function block cannot be sent by the 1-Block Send Terminal to Computer block (Block Model 403).

Block Model	Block Name	Block Address
<301>	Step Ladder Program	400 to 499

Outline

This function block is configured in the form of a ladder diagram comprising a logic sequence and step sequence. This function block differs from the Contact Distributor block (Block Model 201) in that not only are contacts connected but also ladder sequence operations can be executed in between.

•Each Loop Control Unit has enough program space for holding a total of 4000 commands. This number of commands can be used by breaking them up to 100 independent Step Ladder Program blocks. A logic sequence and step sequence co-exist within each single Step Ladder program block.
•Up to 100 commands can be programmed to a single Step Ladder Program block.

•The logic sequence is executed at each operation cycle. For this reason, this sequence is suited to control of devices that must be monitored at all times. The logic sequence is executed at all times when block startup mode (ITEM006) is set to 0. The sequence is also executed for the duration S1 run/stop command is 1 (ON) when block setup mode is set to 1 or according to the BLOCK SET command in other Step Ladder Program blocks.
•A step sequence is a scheme where only one of a number of programmed STEPs is executed, and STEPs are assigned to processes of devices to be operated successively. Step sequences can be programmed with few commands that are executed at each scan cycle, which facilitates locating and remedying errors during debugging.

•ITEMs that can be specified as the operands of sequence commands are "contact output" or "contact input" ITEMs in the case of input type instructions such as LOAD and "contact input" ITEMs in the case of output type instructions such as OUT.
For details, refer to ITEM type or R/W Mode "According to Step Ladder Program" in function block ITEM lists.

ITEM type	Settable Methods				Data Length (bytes)
		According to CX-Process Monitor	According to ITEM Setting block	According to Step Ladder Program	
Contact input		—	—	R/W	1

Note 1: Only "contact input" or "contact output" ITEMs can be specified by sequence commands such as LOAD and OUT. Other ITEM types cannot be specified.
Note 2: Also use "contact input" ITEMs in Field Terminal DI Terminal blocks or "contact output" ITEMs in Field Terminal DO Terminal blocks when the Step Ladder Program block is used to input and output external contacts. External contacts cannot be input or output directly from the Step Ladder Program block.

Block diagram

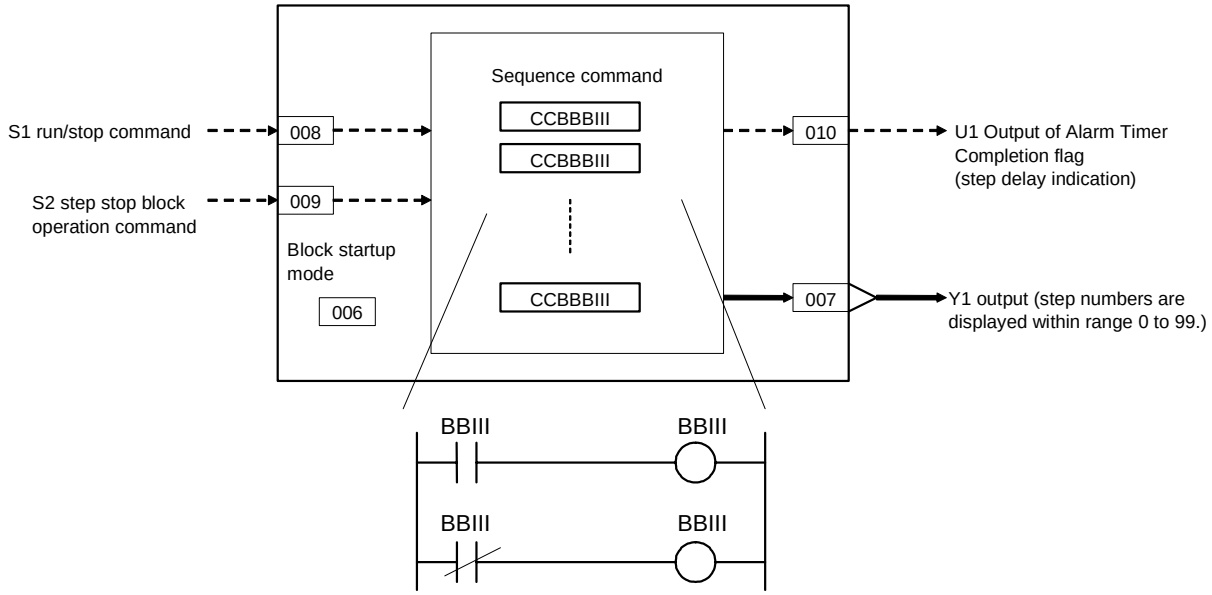

ITEM list

*1:On the CX-Process Monitor, the R/W mode is indicated in the Tuning screen or in the Control screen.

ITEM TYPE	ITEM	Symbol	Data Description	Data Range	Default	COLD start initialization	R/W Mode R: Read, W: Write, R/W: R/W-enabled, -: R/W-disabled Note: r and r/w: Read and read/write for validate action or monitor run status by CX-Process Tool or Monitor, (S): Initial setting data, (O): Operation data				Data Length (bytes)
							According to CX-Process Tool	According to CX-Process Monitor *1	According to ITEM Setting block	According to Step Ladder Program	
Contact input	000		Stop block operation command (0: Cancel stop, 1: Stop)	0, 1	0	–	–	–	–	–	1
Parameter	001		Comment	23 characters	Block name	–	R/W(S)	–	–	–	24
	002		Block Model: Step Ladder Program	301	301	–	R/W(S)	–	–	–	2
Special	003		Execution error display 0: Normal, Other: Error (See Appendix "Execution Error Code List.")		0000	–	r	–	–	–	2
Parameter	004		Operation cycle (sec) 0: Common, 1: 0.1, 2: 0.2, 3: 0.5, 4: 1, 5: 2	0 to 5	0	–	R/W(S)	–	–	–	2
Parameter	006		Block startup mode (0: Start at all times, 1: Start by S1)	0 to 1	0	–	R/W(S)	–	–	–	2
Analog output	007	Y1	Output (step No.)	0 to 99	0	Yes	r	–	–	–	2
Contact input	008	S1	Run/stop command	0, 1	0	Yes	R/W(O)	–	–	R/W	1
	009	S2	Cancel "go to next step" switch	0, 1	0	Yes	R/W(O)	–	–	R/W	1
Contact output	010	U1	Output of Alarm Timer Completion flag	0, 1	0	Yes	–	–	–	R	1

Sequence commands (Maximum number of ITEMs is 100. Data conventions differ from other function blocks.)

*1:On the CX-Process Monitor, the R/W mode is indicated in the Tuning screen or in the Control screen.

ITEM TYPE	ITEM	Symbol	Data Description	Data Range	Default	COLD start initialization	R/W Mode R: Read, W: Write, R/W: R/W-enabled, -: R/W-disabled Note: r and r/w: Read and read/write for validate action or monitor run status by CX-Process Tool or Monitor, (S): Initial setting data, (O): Operation data				Data Length (bytes)
							According to CX-Process Tool	According to CX-Process Monitor *1	According to ITEM Setting block	According to Step Ladder Program	
						–					
Command	011		CC: Command, BBB: Block No., III: ITEM No. Note: Reading/writing by FINS commands is not possible.	CCBBBIII			R/W(S)	–	–	–	4
	to		to	to		–					
	110		CC: Command, BBB: Block No., III: ITEM No. Note: Reading/writing by FINS commands is not possible.	CCBBBIII		–	R/W(S)	–	–	–	4

Disabling conversion between ladder diagrams and mnemonic programs

*1:On the CX-Process Monitor, the R/W mode is indicated in the Tuning screen or in the Control screen.

ITEM TYPE	ITEM	Symbol	Data Description	Data Range	Default	COLD start initialization	R/W Mode R: Read, W: Write, R/W: R/W-enabled, -: R/W-disabled Note: r and r/w: Read and read/write for validate action or monitor run status by CX-Process Tool or Monitor, (S): Initial setting data, (O): Operation data				Data Length (bytes)
							According to CX-Process Tool	According to CX-Process Monitor *1	According to ITEM Setting block	According to Step Ladder Program	
Parameter	200		Mnemonic flag *1 0: Conversion to ladder diagrams (reverse assembly) and from ladder diagrams (assembly) enabled. 1: Conversion to and from ladder diagrams disabled.	0, 1	0	–	R/W (S)	–	–	–	1

*1: Set ITEM200 to 1 when inputting step ladder programs in mnemonic from the CX-Process Tool to prevent conversion of programs between ladder diagrams and mnemonic programs.

Note: Sequence commands (ITEM 011 to ITEM 110) cannot be read and written with FINS commands addressed to the Loop Control Unit (command codes: 0240, 0241, 0242, and 0243).

List of basic commands

Name	Mnemonic	Command CCBBBIII	Ladder Symbol	Description (command format, CC: command, BBB: block address, III: ITEM number)
Input condition				
LOAD	LOAD	01BBBIII		Indicates a logical start of the logic block, creates an ON/OFF execution condition based on the ON/OFF status of the contact, and connects to the next stage.
LOAD NOT	LN	02BBBIII		Indicates a logical start of the logic block, creates an ON/OFF execution condition based on the reverse of the ON/OFF status of the contact, and connects to the next stage.
AND	AD	03BBBIII		Takes a logical AND of the status of the contact and the current execution condition.
AND NOT	AN	04BBBIII		Reverses the status of the contact and takes a logical AND with the current execution condition.
OR	OR	05BBBIII		Takes a logical OR of the status of the contact and the current execution condition.
OR NOT	RN	06BBBIII		Reverses the status of the contact and takes a logical OR with the the current execution condition.
AND LOAD	AL	07000000	Logic block Logic block	Takes a logical AND between logic blocks.
OR LOAD	OL	08000000	Logic block Logic block	Takes a logical OR between logic blocks.
Output operation				
OUT	OT	11BBBIII		Outputs the result (execution condition) of logical processing: 0 (OFF) at condition 0 (OFF), and 1 (ON) at condition 1 (ON).
OUT NOT	ON	12BBBIII		Outputs the result (execution condition) of logical processing: 1 (ON) at condition 0 (OFF), and 0 (OFF) at condition 1 (ON).
SET	ST	13BBBIII	S	SET turns the oeprand bit 1 (ON) when the execution condition is 1 (ON), and does not affect the status of the operand bit when the execution condition is 0 (OFF). Use RESET to turn OFF a bit that has been turned ON with SET.
RESET	RS	14BBBIII	R	RESET turns the oeprand bit 0 (OFF) when the execution condition is 1 (ON), and does not affect the status of the operand bit when the execution condition is 0 (OFF). Use SET to turn OFF a bit that has been turned ON with RESET.

Name	Mnemonic	Command CCBBBIII	Ladder Symbol	Description (command format, CC: command, BBB: block address, III: ITEM number)
Output operation				
DIFU	DU	15BBBIII	—{DU}—	Outputs 1 (ON) for one operation cycle only when the execution condition goes to 1 (ON) from 0 (OFF).
DIFD	DD	16BBBIII	—{DD}—	Outputs 1 (ON) for one operation cycle only when the execution condition goes to 0 (OFF) from 1 (ON).
Step Ladder Control Commands (SS: STEP number)				
STEP declaration	SP	21SS	Step number — STEP —	STEP declares the step number, and has no input conditions (is a direction connection to the bus). Any numbers in the range 00 to 99 are used as the step number, and are placed in ascending order. 1) Logic sequence: The step number is fixed at 00, and is functional at all times. Declaration of step number 00 can be omitted. 2) Step sequence: When the step number is writhin the range 01 to 99, only one of the steps is functional. When the program is started, step number 01 is functional.
BLOCK SET	BS	22BBBSS	—{BS}—	When the input conditions turn ON, operation of the specified step number of the Step Ladder Program block at the specified block address (400 to 499) is started. Run/stop command S1 of the specified block turns automatically 1 (ON). Operation of currently executing steps in already operating Step Ladder Program block is interrupted, and execution of the program jumps to the specified step. Note: This command cannot be used in the logic sequence (STEP00).
BLOCK RESET	BR	23 BBB	—{BR}—	When the input conditions turn ON, operation of the Step Ladder Program block is stopped at the specified block address (Execution of the self function block continues.) Run/stop command S1 of the specified block automatically turns 0 (OFF). Note: This command cannot be used in the logic sequence (STEP00).
JUMP	JP	25 BBBSS	—JUMP—	When the input conditions turn ON, execution of the program jumps to the specified step number (01 to 99) of the Step Ladder Program block at the specified block address (400 to 499). - To specify a jump to the self step number, set the block address to 000. - When a jump is made to another Step Ladder Program block, run/stop command S1 of the source block automatically turns 0 (OFF), and run/stop command S1 of the destination block turns 1 (ON).

Name	Mnemonic	Command CCBBBIII	Ladder Symbol	Description (command format, CC: command, BBB: block address, III: ITEM number)
Step Ladder Control Commands (SS: STEP number)				
STEP TIMER	TS	27 NNNN	— STEP TIMER —	This is the timer (setting range: 0 to 9999 sec) for moving between steps. It has no input conditions. (STEP TIMER is placed in the same line as the STEP command.) Operation is started when program execution moves to the line containing STEP command. When the time set by STEP TIMER is reached, the program execution moves to the next step. Note "Move conditions to next step" is performed on a first-come, first-served basis.
ALARM TIMER	TA	28 NNNN	— ALM TIMER —	This is the timer (setting range: 0 to 9999 sec) for monitoring steps. It has no input conditions. (ALARM TIMER is placed in the same line as the STEP command.) Operation is started when program execution moves to the line containing STEP command. When the time set by ALARM TIMER is reached, the Step Timer Completion flag (step congestion indicator) turns 1 (ON). At this time, the step is held at the current values.
Others				
END	ED	00		Indicates the end of a program. Note: The END command is automatically placed at the end of a program when the Step Ladder Program block is prepared using CX-Process Tool. It is placed after STEP00 when the program comprises STEP00 only, and is placed after the nth STEP where the program ends.
NO OPERATION	NP	30		This instruction has no function. (No Processing is for NOP.)

Note •The LOAD command cannot be input by entering "LD".
•Use the Internal Switch block (Block Model 209) for temporarily holding the results of operations on contacts.

Specifications of Step Ladder Program block

Item			Description
Total number of command in all Step Ladder Program blocks available on a single Loop Control Unit			4000 Note This is the total value when up to 100 Step Ladder Program blocks are used. The actual limit is "number of commands + number of Step Ladder Program blocks =< 4100". For this reason, the actual total number of commands becomes 4000 to 4059 depending on the number of Step Ladder Program blocks used (41 to 100).
Per single Loop Control Unit		Total number of commands	100
		Total number of steps	100
Creating step ladder programs on the CX-Process Tool software		Ladder diagrams	22 rows and 10 columns max.
		Mnemonics	No restrictions
Function block operation conditions			You can select from the following two conditions (set in block startup mode [ITEM006]): •Start at all times •Start by S1 run/stop command Note: Program execution can also be started by the BLOCK SET command programmed in other Step Ladder Program blocks.
Types of sequence	STEP00	Logic sequence	This sequence must be prepared. This sequence is operated at all times when the function block operation conditions are established.
	STEP 01 to 99	Step sequence	This sequence may be omitted. Program execution starts from STEP01 when the function block operation conditions are established. Program execution moves between STEPs by one of the following conditions (when two or more conditions are in contention, the first condition to have occurred takes priority): •When the input condition of the final sequence command in the previous STEP is ON •By JUMP command •By STEP TIMER command
Usable command types	STEP00	Logic sequence	LOAD, LOAD NOT, AND, AND NOT, OR, OR NOT, AND LOAD, OR LOAD, OUT, OUT NOT, DIFU, DIFD, NOP, END
	STEP 01 to 99	Step sequence	LOAD, LOAD NOT, AND, AND NOT, OR, OR NOT, AND LOAD, OR LOAD, OUT, OUT NOT, DIFU, DIFD STEP, BLOCK SET, BLOCK RESET, JUMP, STEP TIMER, ALARM TIMER, NOP, END

Configuration of Step Ladder Program block

The Step Ladder Program block comprises a logic sequence (STEP00) and a step sequence (STEP01 onwards).

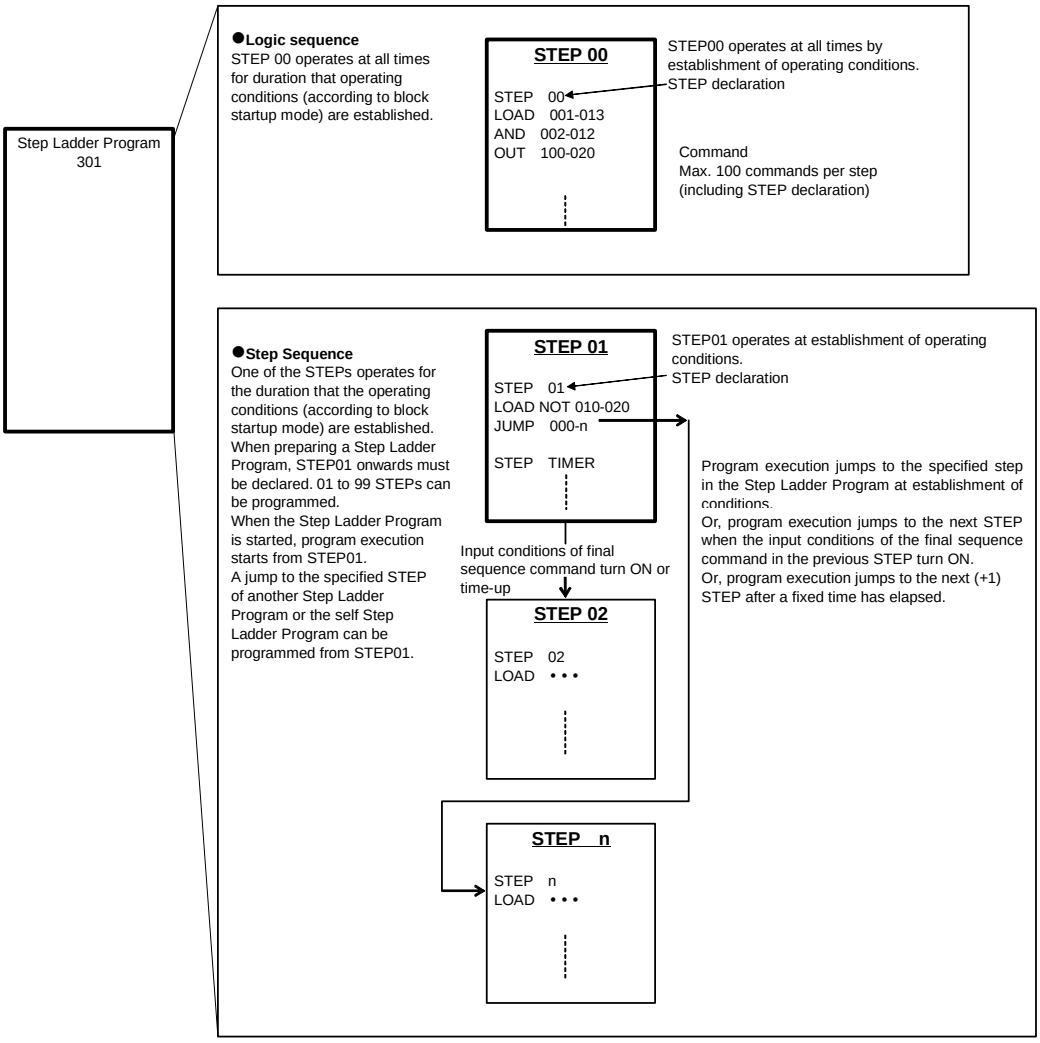

Mechanism of Step Ladder Programs

The logic sequence and step sequence can be executed simultaneously.

Note: When the step sequence is not used, create only STEP00 and do not create steps STEP01 onwards.
When the logic sequence is not used, create steps STEP01 onwards and do not create STEP00.

- The logic sequence is executed at all times at each operation cycle when the operating conditions of the function block are established.
- Execution of the step sequence normally*1 starts from STEP01 when the operating conditions of the function block are established. Basically, when the input conditions of the final sequence command in that STEP turns ON, program execution jumps to the next (+1) STEP. Program execution can also jump to other STEPs by using the JUMP command or STEP TIMER command. Only one STEP is executed at each operation cycle. For this reason, when program execution jumps to another STEP, the STEP at the jump destination is executed at the next operation cycle.

*1: Program execution can also be started from a STEP other than STEP01 by using the JUMP or BLOCK SET command.

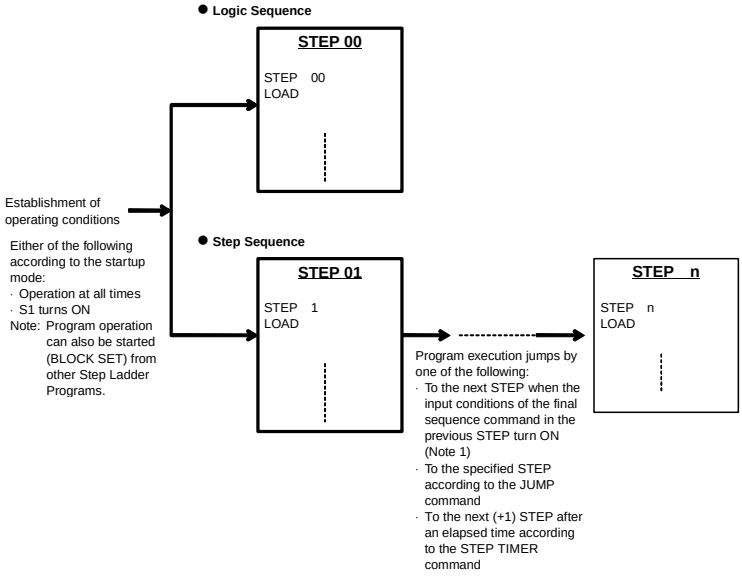

Note 1. Program execution jumps to the next STEP in the following instances

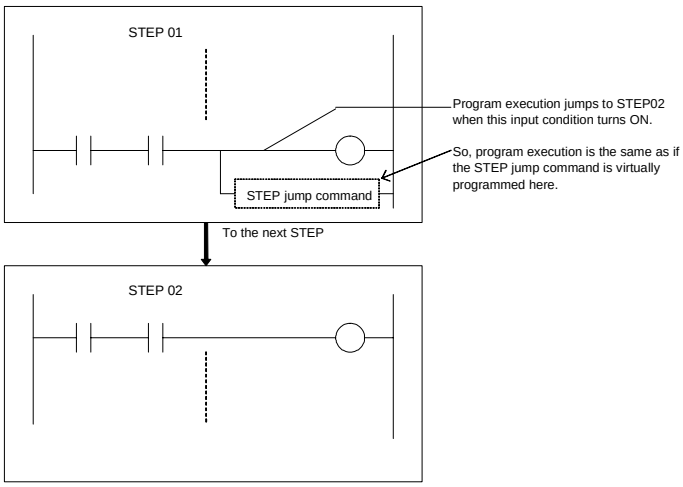

A "contact input" ITEM that has been turned ON by the OUT command before a jump in program execution stays ON even if program execution moves to the next STEP. To clear the state of the "contact input" ITEM, use the OUT NOT or RESET command on the same ITEM.

Execution of STEPs at each operation cycle is as follows.

•When the Step Ladder Program comprises only the logic sequence (STEP00 only), STEP00 is executed at each operation cycle (ITEM004). When commands such as LOAD or OUT are executed, the specified ITEM of the specified function block is read and written.

•When the Step Ladder Program comprises both a logic sequence and a step sequence (STEP00 and STEP01 onwards), STEP00 and one of the STEPs (STEPn) are executed at each operation cycle.

● Logic sequence only

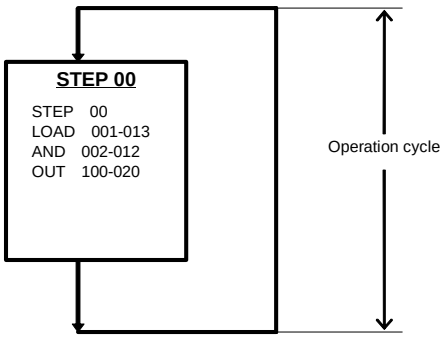

● Logic sequence and step sequence

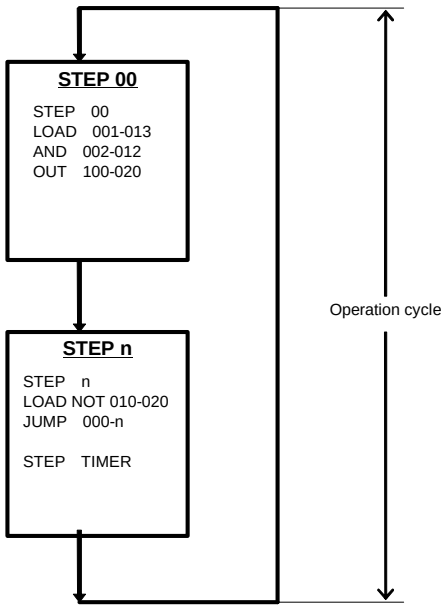

Note: All commands can be input into the program regardless of whether ladder programs or mnemonic programs are being used.
When using ladder diagrams, however, a maximum of 22 rows and 10 columns can be input per circuit. If a circuit containing more than 22 rows or 10 columns is converted from mnemonic to ladder diagram form (reverse assembly), an error will occur. When entering programs in mnemonic form, set the Mnemonic Flag (ITEM 200)[*1] to 1 (ON) to disable conversion to ladder diagrams. (Supported from version 2.50 of the Loop Control Unit.)

*1: The Mnemonic Flag (ITEM 200) is supported from version 2.50 of the Loop Control Unit. When this flag is set to 1 (ON), conversion is not possible between ladder diagrams and mnemonic programs.

Description of sequence commands

Note: In the following descriptions, error code 80 means "Step Ladder Program command error" and error code 81 means "Step Ladder Program connection terminal not defined."

Basic commands

The following commands can be used in the logic sequence (STEP00) and in the step sequence (STEP01 to STEP99).

LOAD (01), LOAD NOT (02)

Input conditions
Not required

Operand
Block address-ITEM number

Function
Reads the ON/OFF status of the specified "contact output" or "contact input" ITEM when this command is executed.

Supplementary description
•At least one LOAD or LOAD NOT command is required as the input condition for the following commands:

OUT, OUT NOT, SET, RESET, DIFU, DIFD, BLOCK SET, BLOCK RESET, JUMP

•To read changes in contact states (OFF to ON, ON to OFF), temporarily read the state of the contact using this command, and then use the differentiated up (DIFU) or differentiated down (DIFD) command.
•In the following cases, an execution error occurs and the command in question is not executed:

The specified block does not exist (is not registered). (error code: 81)
The specified ITEM does not exist. (error code: 81)
The specified ITEM is neither a "contact input" ITEM nor a "contact output" ITEM. (error code: 81. Note, however, that this is possible only when the command is entered by its mnemonic.)

AND (03), AND NOT (04), OR (05), OR NOT (06)

Input conditions
Required

Operand
Block address-ITEM number

Function
Reads the ON/OFF status of the specified "contact output" or "contact input" ITEM when this command is executed (reverses the state in the case of NOT commands), and takes the logical AND or OR with the previous execution condition.

Supplementary description

•In the following cases, an execution error occurs and the command in question is not executed:
The LOAD or LOAD NOT command does not precede this command. (error code: 80, Step Ladder Program command error)
The specified block does not exist (is not registered). (error code: 81)
The specified ITEM does not exist. (error code: 81)
The specified ITEM is neither a "contact input" ITEM nor a "contact output" ITEM. (error code: 81)

AND LOAD (07), OR LOAD (08)

Input conditions

Required

Operand

None (0000-00)

Function

Takes a logical AND or OR between logic blocks.
("Logic block" refers to a logical operation that starts from the LOAD or LOAD NOT command and continues up to before the next LOAD or LOAD NOT command.)

Supplementary description

•When three or more logic blocks are to be connected in series, the logic blocks can also be connected successively in such a way that two logic blocks are connected in series by this command and then the next logic block is connected in series by this command. This command can also be placed after three or more logic blocks so that all logic blocks are connected in series.
•In the following cases, an execution error occurs and the command in question is not executed:
Two or more LOAD or LOAD NOT commands do not precede this command. (error code: 80)
The total number of AND LOAD or OR LOAD commands is less than the "total number of LOAD or LOAD NOT commands - 1". (error code: 80)

OUT (11), OUT NOT (12)

Input conditions

Required

Operand

Block address-ITEM number

Function

Outputs the result (OUT) or reverses the result (OUT NOT) of logical processing on the specified "contact input" ITEM when the input conditions are ON.

Note A contact ITEM that has been turned ON by the OUT command stays ON even if program execution moves to the next STEP. For this reason, to perform step progression control in a step sequence, use the RESET command at the next STEP to turn OFF the contact ITEM that has been turned ON.
Supplementary description

- This command differs from the SET and RESET commands in that ON is output if the input condition is ON, and OFF is output when the input condition is OFF. (This description applies to the OUT command.) For this reason, changes in states such as Auto/Manual or Remote/Local are used as output to take the result of logical processing. (When indicating manipulation of Auto/Manual switching or Remote/Local switching, use the SET and RESET commands with the DIFU command.)
- When program execution has jumped to a specified STEP by the JUMP command, contact ITEMs that have turned ON by the OUT command do not turn OFF and are held at the ON state.
- In the following cases, an execution error occurs and the command in question is not executed:

  The specified block does not exist (is not registered). (error code: 81)
  The specified ITEM is not a "contact input" ITEM. (error code: 81)
  There are LOAD or LOAD NOT command input conditions. (when connected directly to bus bar) (error code: 80)

SET (13), RESET (14)

Input conditions

Required

Operand

Block address-ITEM number

FunctionSET turns the specified "contact input" ITEM ON when the input condition is ON, and RESET turns the ITEM OFF when the input condition is ON. The ON (SET) or OFF (RESET) state of the ITEM is held as it is even if the input condition is OFF. The ON or OFF state of the ITEM is held as long as the RESET command is not executed for the SET command or vice versa.

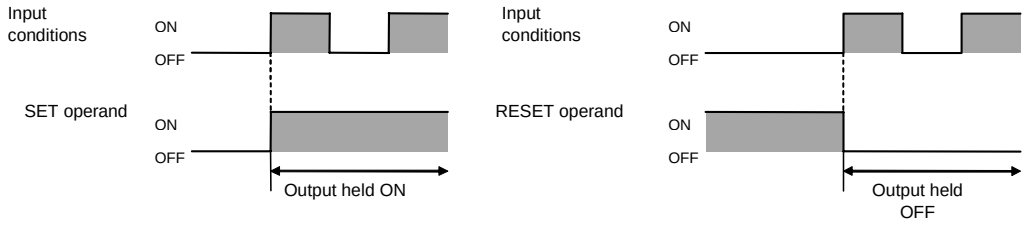

Supplementary description

- This command is used in combination with the DIFU command when indicating manipulation such as Auto/Manual switching or Remote/Local switching. (Refer to the example in the supplementary description for the DIFU and DIFD commands.)
- The state of contact ITEMs that are set or reset by these commands is held even if program execution moves to another STEP for as long as the RESET command and SET command are not executed.
- In the following cases, an execution error occurs and the command in question is not executed:
  The specified block does not exist (is not registered). (error code: 81)
  The specified ITEM is not a "contact input" ITEM. (error code: 81)
  There are no LOAD or LOAD NOT command input conditions. (when connected directly to bus bar) (error code: 80)

DIFU (15), DIFD (16)

Input conditions
Required

Operand
Block address-ITEM number

Function
DIFU turns the specified "contact input" ITEM ON for one cycle when the input condition goes from OFF to ON, and DIFD turn the ITEM ON for one cycle when the input condition goes from ON to OFF.

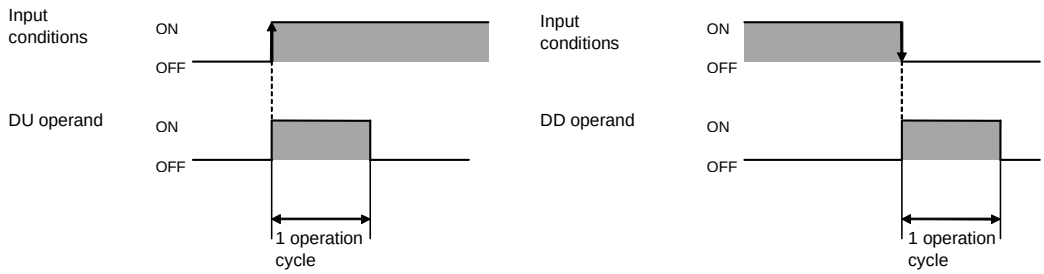

Note When an ON signal for one operation cycle that has been generated by this command is to be used as the input at another function block, set the operation cycle of that function block to the same as or longer than the operation cycle of the source Step Ladder Program block where this ON signal is to be generated. If an attempt is made to read at a function block having an operation cycle that is shorter than the Step Ladder Program block where this ON signal is generated, the ON signal may not be read correctly.

Supplementary description
- Note that the ON signal is held by this command at execution of the first command in the Step Ladder Program block and not at execution of this command at the next operation cycle.
- This command is canceled at the moment that program execution jumps to another STEP. When this command is canceled, the specified operand is returned to OFF.
- When this command is used in STEP00, it will not be canceled as program execution does not jump to other STEPs in the Step Ladder Program from this STEP, and the number of DIFU or DIFD commands that can be used in other STEPs is reduced by one. (The maximum number of DIFU or DIFD commands that can be executed simultaneously is 256.)
- This command can be used to specify a "contact input" ITEM in the Internal Switch block (Block Model 209) to create a differentiated contact that is ON or OFF for one operation cycle.
- The rising edge of the contact is not detected when a constantly ON contact (ITEM021 of System Common block) is set as the input condition.

•Use the DIFU or DIFD commands to perform Auto/Manual switching or Remote/Local switching as shown below in PID or other Control blocks.
Example)

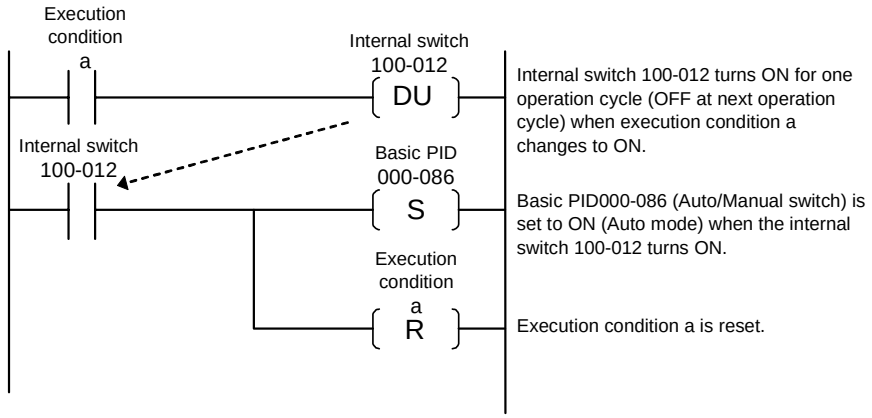

•In the following cases, an execution error occurs and the command in question is not executed:
The specified block does not exist (is not registered). (error code: 81)
The specified ITEM is not a "contact input" ITEM. (error code: 81)
There are no LOAD or LOAD NOT command input conditions. (when connected directly to bus bar) (error code: 80)

Step sequence commands

The following commands (see Note) can be used only in the step sequence (STEP01 to STEP99).

Note: BLOCK SET and BLOCK RESET can also be used in the logic sequence (STEP00).

STEP (16)

Input conditions
Not required

Operand
Step number (00 to 99)

Function
Sets finite break points (STEPs) in a step sequence.
When the logic sequence is used, STEP00 is automatically assigned as the default STEP. This step has no input conditions.
STEPs in the step sequence are automatically assigned a step number starting from 00.
Program execution jumps to the STEP declared by STEP at the next operation cycle when one of the following conditions is established:

1) When the input condition of the final command of the STEP having the immediately previous number is ON
2) When program execution has jumped to this STEP by the JUMP command
3) When the time count set by the STEP TIMER command in the STEP having the immediately previous number has been reached

The first of the above three conditions that is met is the valid condition.

Supplementary description

Example (Command description using mnemonics)

(SP) 2101 Declares STEP01.
(LOAD) 012000101 Executes LOAD (01) on ITEM010 at block address 200.
:
:
(LOAD) 01200011 Executes LOAD (01) on ITEM011 at block address 200.
(OUT) 1120012 Executes OUT (11) on ITEM012 at block address 200.
(SP) 2102 Declares STEP02.
:
:

In the above example, program execution jumps to STEP02 when ITEM011 at block address 200, that is programmed as the input condition of the final command of the previous STEP, turns ON.

BLOCK SET (22)

Input conditions

Required

Operand

Step Ladder Program block address, step number (00 to 99)

Function

(This function cannot be used in logic sequence STEP00.)
Starts program execution at the specified step number of the specified Step Ladder Program block at the next operation cycle when the input condition is ON. (This command differs from JUMP in that execution of the self STEP onwards is continued.)
When this command is executed, S1 run/stop command of the specified Step Ladder Program block is forcibly turned ON, and S2 step stop switch is forcibly turned OFF. (At the same time, execution of STEP TIMER or ALARM TIMER is canceled if they are currently executing, and the Step Timer Completion flag turns OFF if it is ON when the time set by the ALARM TIMER command is reached.)

Supplementary description

- When the specified Step Ladder Program block is already executing, the currently executing STEP in the program is quit, and program execution jumps to the specified STEP.
- When the block startup mode ITEM of the specified Step Ladder Program block is set to 0 (start at all times), the function block starts up as it is and program execution jumps to the specified step number.
- In the following cases, an execution error occurs and the command in question is not executed:

There are no LOAD or LOAD NOT command input conditions. (when connected directly to bus bar) (error code: 80)
The self block address is specified as the specified function block. (error code: 80)
There is no specified block address. (error code: 81)
The specified block address is not the Step Ladder Program block (Block Model 301). (error code: 81)

BLOCK RESET (23)

Input conditions
Required

Operand
Step Ladder Program block address, step number (00 to 99)

Function
(This function cannot be used in logic sequence STEP00.)
Stops program execution at the specified step number of the specified Step Ladder Program at the next operation cycle when the input condition is ON. When this command is executed, S1 run/stop command of the specified Step Ladder Program block is forcibly turned OFF.

Supplementary description
- This command is invalid when the block startup mode of the specified Step Ladder Program block is set to 0 (start at all times).
- In the following cases, an execution error occurs and the command in question is not executed:
  There are no LOAD or LOAD NOT command input conditions. (when connected directly to bus bar) (error code: 80)
  The self block address is specified as the specified function block. (error code: 80)
  There is no specified block address. (error code: 81)
  The specified block address is not the Step Ladder Program block (Block Model 301). (error code: 81)

JUMP (25)

Input conditions
Required

Operand
Step Ladder Program block address, step number (00 to 99)

Note: Block address 000 is the self block.

Function
- To jump to another Step Ladder Program block (block address other than 000)
  Causes program execution to jump to the specified step number of the specified Step Ladder Program block address at the next operation cycle when the input condition is ON. Commands onwards from the self STEP are not executed, and the self function block (including logic sequence STEP00) is stopped.
  When this command is executed, S1 run/stop command of the source Step Ladder Program block automatically turns OFF, and S1 run/stop command of the jump destination Step Ladder Program block automatically turns ON. At the same time, timer execution set by the STEP TIMER or ALARM TIMER commands is continued if it is executing while the specified STEP at the jump destination is being executed. Timer execution set by the STEP TIMER or ALARM TIMER commands is canceled if it is executing at other STEPs and the specified STEP at the jump destination is not being executed. The Alarm Timer Completion flag turns OFF if it is ON when the time set by the ALARM TIMER command is reached.
  When the input condition is OFF, nothing happens, and the subsequent commands are executed.

- To jump to a location within the self Step Ladder Program block (block address: 000)
  Causes program execution to jump to the specified step number of the self function

block when the input condition is ON. Commands onwards from the self STEP are not executed. The self function block (including logic sequence STEP00) continues to execute.
When the input condition is OFF, nothing happens, and the subsequent commands are executed.

Supplementary description

•When the specified STEP in the specified Step Ladder Program block is already executing, nothing happens on the specified Step Ladder Program block, and subsequent commands are not executed.

Example

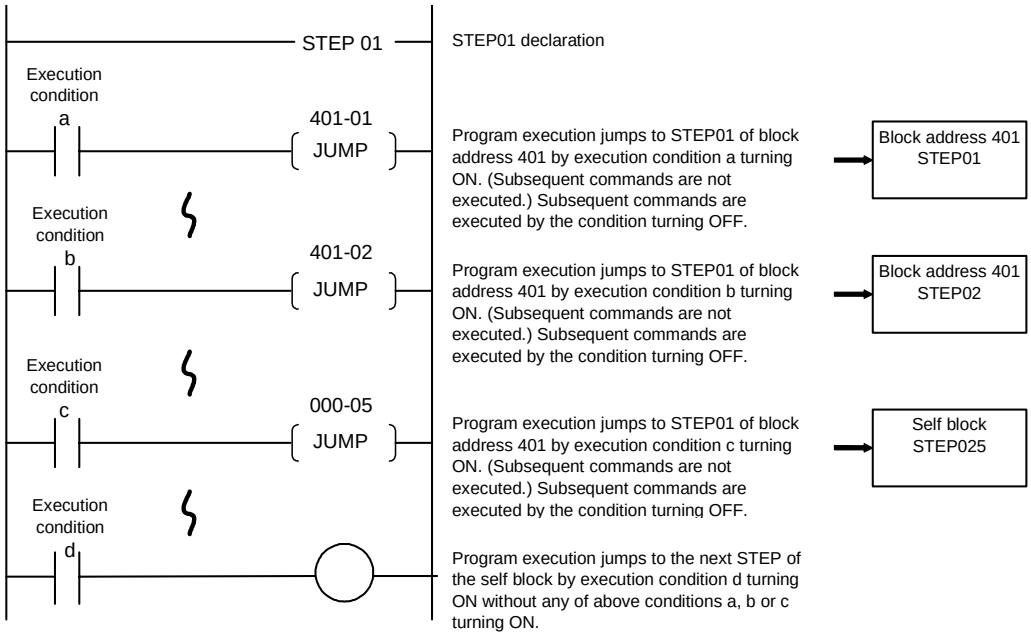

•In the following cases, an execution error occurs and the command in question is not executed:
There are no LOAD or LOAD NOT command input conditions. (when connected directly to bus bar)
There is no specified block address. (error code: 81)
The specified block address is not the Step Ladder Program block (Block Model 301). (error code: 81)
The specified STEP number does not exist. (error code 81)
The self step number of the self block is specified. (error code: 81)
The self step number is specified. (error code: 80)
The jump destination STEP number is STEP00. (error code: 81)

STEP TIMER (27)

Input conditions
Not required

Operand
Timer setting value (0 to 9999 seconds)

Function
Automatically starts counting by the timer when program execution jumps to the self step. When the value set by this command is reached, execution of the self step is quit, and program execution jumps to the next (+1) STEP at the next operation cycle.
This command has no input condition and is described in the same line as the STEP declaration command.

Supplementary description
•This command is canceled at the moment that the self STEP jumps to another location. ("Cancel" here refers to the time count being stopped and cleared.)

Example: (Command description using mnemonics)
(SP) 2102 Declares STEP02.
(TS) 27010 Sets STEP TIMER 10 seconds.
(LOAD) 01200011 Executes LOAD (01) on ITEM011 at block address 200.
(OUT) 1120012 Executes OUT (11) on ITEM012 at block address 200.
(SP) 2102 STEP03 Declares STEP03.
:
:
In the above example, program execution jumps to STEP03 by whichever of the conditions is established the earliest ten seconds after program execution jumps to STEP02 when ITEM011 of block address 200 (input condition of the final command in the previous STEP) turns ON.

•In the following case, an execution error occurs and the command in question is not executed:

The self step number is STEP00. (error code: 80)

ALARM TIMER (28)

Input conditions
Not required

Operand
Timer setting value (0 to 9999 seconds)

Function
Automatically starts counting by the timer when program execution jumps to the self step. When the value set by this command is reached, the output of Alarm Timer Completion flag (ITEM010) is turned ON.
This command has no input condition and is described in the same line as the STEP declaration command.

Supplementary description

•This command is canceled at the moment that program execution jumps to another STEP.

•The output of Alarm Timer Completion flag (ITEM010) turns OFF when program execution jumps to another STEP or when program execution is stopped by the BLOCK RESET command at another Step Ladder Program block.

Example (Command description using mnemonics)
(SP) 2102 Declares STEP02.
(TA) 27010 Sets ALARM TIMER 10 seconds.
(LOAD) 01200011 Executes LOAD (01) on ITEM011 at block address 200.
(OUT) 1120012 Executes OUT (11) on ITEM012 at block address 200.
(SP) 2102 STEP03 Declares STEP03.
:
:
Counting by the ALARM TIMER command is canceled and program execution jumps to STEP03 when ITEM011 at block address 200 turns ON. Ten seconds after program execution jumps to STEP02 (and when it has not jumped to another STEP), output of Alarm Timer Completion flag (ITEM010) turns ON.

•In the following case, an execution error occurs and the command in question is not executed:

The self step number is STEP00. (error code: 80)

Block Model	Block Name	Block Address
<401>	DO to Computer	501 to 532

Outline

This function block is the Node Terminal for sending 128 contact signals to the computer.

- To monitor the state of the contacts on CX-Process Monitor, be sure to connect the contact signals (including parameters) to this function block, and set the monitor tags on CX-Process Tool.
- Up to three Loop Control Units can be mounted on a single PLC. The block address of the PLC is shared by these three Loop Control Units. So, set the block addresses for each of the Loop Control Units to unique values.
- All ITEMs (contact input and output signals, and contact parameters) for contact signals whose data is either 0 or 1 in all function blocks can be designated as the source.
- There are two ways of designating the contacts as the source:
  - Batch designation of multiple contacts
  - Individual designation: Contacts are designated by the Step Ladder Program block (Block Model 301) or Contact Distributor block (Block Model 201).

Note To send to CX-Process Monitor contact ITEMs other than ITEMs (tag ITEMs) that can be sent by the 1-Block Send Terminal to Computer block (Block Model 403) or 4-block Send Terminal to Computer block (Block Model 404), specify the relevant ITEMs as the source using the DO to Computer block.

Block diagram

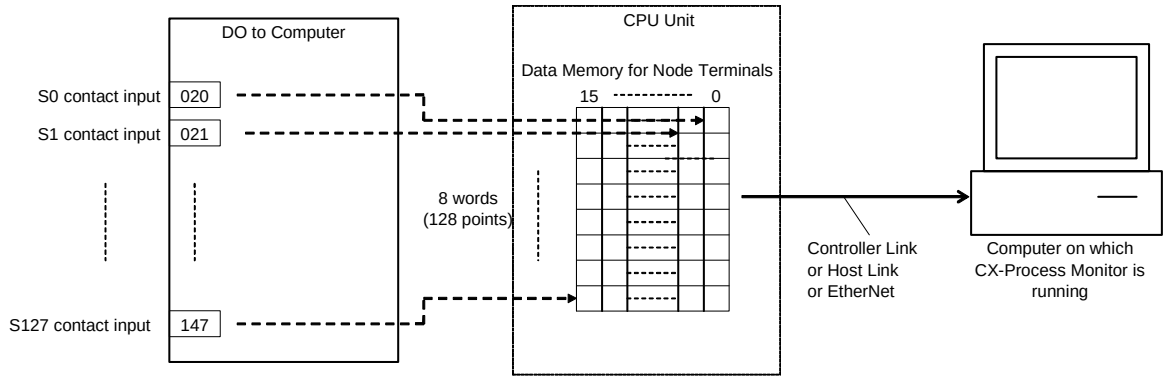

ITEM list

ITEM TYPE	ITEM	Symbol	Data Description		Data Range	Default	R/W Mode R: Read, W: Write, R/W: R/W-enabled, –: R/W-disabled Note: r and r/w: Read and read/write for validate action or monitor run status by CX-Process Tool or Monitor, (S): Initial setting data, (O): Operation data				Data Length (bytes)
							According to CX-Process Tool	–	According to ITEM Setting block	According to Step Ladder Program	
Contact input	000		Stop block operation command (0: Cancel stop, 1: Stop)		0, 1	0	–	–	–	–	1
Parameter	001		Comment		23 characters	Block name	R/W(S)	–	–	–	24
	002		Block Model: DO to Computer		401	401	R/W(S)	–	–	–	2
Special	003		Execution error display 0: Normal, Other: Error (See Appendix "Execution Error Code List.")			0000	r	–	–	–	2
Parameter	004		Operation cycle (sec) 0: Common, 1: 0.1, 2: 0.2, 3: 0.5, 4: 1, 5: 2		0 to 5	0	R/W(S)	–	–	–	2
	011	DX1	Terminal1	BBBIII: Source designation block address and leading ITEM number PPP: 001 to 032: number of input points JJJ: 020 to 147: leading ITEM number of self block	BBBIII-PPPJJJ	000000000000	R/W(S)	–	–	–	8
	012	DX2	Terminal2		BBBIII-PPPJJJ	000000000000	R/W(S)	–	–	–	8
	to										
	018	DX8	Terminal8		BBBIII-PPPJJJ	000000000000	R/W(S)	–	–	–	8
Contact input	020	S0	Contact input		0, 1	0	–	–	–	R/W	1
	to										
	147	S127	Contact input		0, 1	0	–	–	–	R/W	1

Block Model	Block Name	Block Address
<402>	AO to Computer	501 to 532

Outline

This function block is the Node Terminal for sending 16 analog points to the computer.

- To monitor the state of the contacts on CX-Process Monitor, be sure to connect the contact signals (including parameters) to this function block, and set the monitor tags on CX-Process Tool.
- Up to three Loop Control Units can be mounted on a single PLC. The block address of the PLC is shared by these three Loop Control Units. So, set the block addresses for each of the Loop Control Units to unique values.
- All ITEMs (contact input and output signals, and contact parameters) for contact signals whose data is either 0 or 1 in all function blocks can be designated as the source.

Note To send to CX-Process Monitor contact ITEMs other than ITEMs (tag ITEMs) that can be sent by 1-Block Send Terminal to Computer block (Block Model 403) or 4-block Send Terminal to Computer block (Block Model 404), specify the relevant ITEMs as the source using the AO to Computer block.

Block diagram

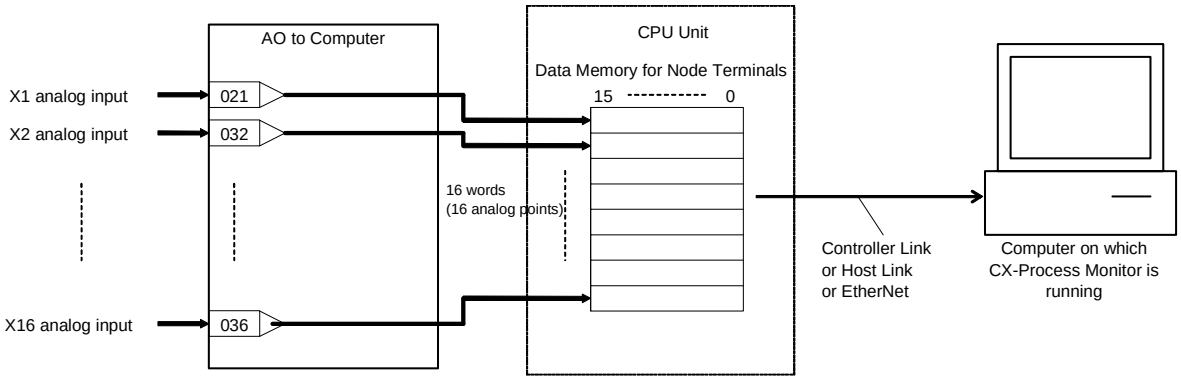

ITEM list

*1:On the CX-Process Monitor, the R/W mode is indicated in the Tuning screen or in the Control screen.

ITEM TYPE	ITEM	Symbol	Data Description	Data Range	Default	COLD start initialization	R/W Mode R: Read, W: Write, R/W: R/W-enabled, -: R/W-disabled Note: r and r/w: Read and read/write for validate action or monitor run status by CX-Process Tool or Monitor, (S): Initial setting data, (O): Operation data				Data Length (bytes)
							According to CX-Process Tool	According to CX-Process Monitor *1	According to ITEM Setting block	According to Step Ladder Program	
Contact input	000		Stop block operation command (0: Cancel stop, 1: Stop)	0, 1	0	–	–	–	–	–	1
Parameter	001		Comment	23 characters	Block name	–	R/W(S)	–	–	–	24
	002		Block Model: AO to Computer	402	402	–	R/W(S)	–	–	–	2
Special	003		Execution error display 0: Normal, Other: Error (See Appendix "Execution Error Code List.")		0000	–	r	–	–	–	2
Parameter	004		Operation cycle (sec) 0: Common, 1: 0.1, 2: 0.2, 3: 0.5, 4: 1, 5: 2	0 to 5	0	–	R/W(S)	–	–	–	2
Analog input connection information	021		X1 source designation (BBB: Block address, III: ITEM No.)	BBBIII	000000	–	R/W(S)	–	–	–	4
	to					–					
	036		X16 source designation (BBB: Block address, III: ITEM No.)	BBBIII	000000	–	R/W(S)	–	–	–	4
Analog input	041	X1	Analog input	±320.00%	0.00	Yes	r	R	–	–	2
	to					Yes					
	056	X16	Analog output	±320.00%	0.00	Yes	r	R	–	–	2

Block Model	Block Name	Block Address
<403>	1-Block Send Terminal to Computer	501 to 532

Outline

This function block is the Node Terminal for specifying the block address of the Control block to be sent to the computer.

•To monitor the state of one of the following Control blocks on CX-Process Monitor and to change the Set Point or other settings on the Control block at the same time, be sure to connect the Control block as the source of this function block, and set the monitor tags for the function block and each ITEM using CX-Process Tool.

•The following Control blocks can be specified for monitoring:

001: 2-position ON/OFF
002: 3-position ON/OFF
011: Basic PID
012: Advanced PID
013: Blended PID
014: Batch Flowrate Capture
031: Indication and Setting
032: Indication and Operation
033: Ratio Setting
034: Indicator

Note1 •The High/Low Alarm block (Block Model 111), Timer block (Block Model 205) and Counter block (Block Model 208) function blocks cannot be specified by this function block. To specify these function blocks, use the 4-Block Send Terminal to Computer block (Block Model 404).
•To register the above Control blocks in the Tuning screen, be sure to use the 1-Block Send Terminal to Computer block (Block Model 403). Control blocks that are specified by the 4-Block Send Terminal to Computer block (Block Model 404) cannot be registered to the Tuning screen on CX-Process Monitor.

Note2 The ITEMs that can be sent to CX-Process Monitor by 1-Block Send Terminal to Computer block (Block Model 403) are determined by the default settings of each function block. (Fixed names called "tag ITEMs" are assigned to each ITEM.) To send ITEMs other than these (parameters having contact or analog values) to CX-Process Monitor, specify the relevant ITEM as the source in the AO to Terminal block (Block Model 402) or DO to Terminal block (Block Model 401).

•Up to three Loop Control Units can be mounted on a single PLC. However, only 32 block addresses (501 to 532) can be used on a single PLC. So, set the block addresses for each of the Loop Control Units to unique values.

Block diagram

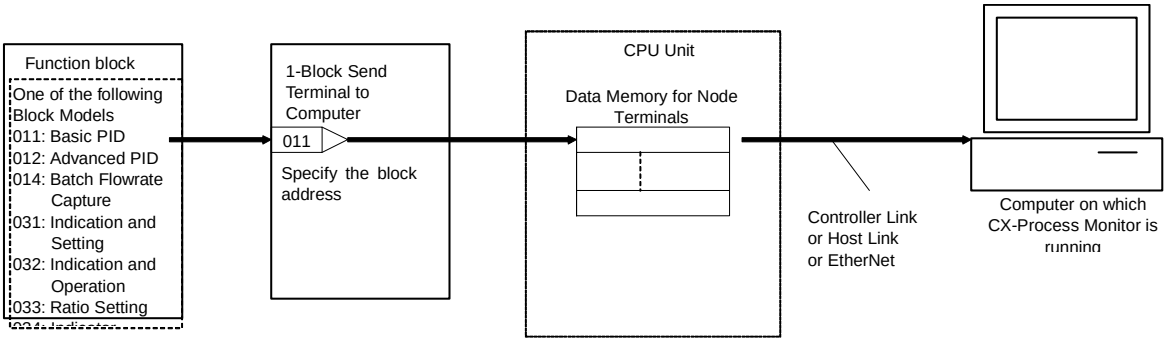

ITEM list

*1:On the CX-Process Monitor, the R/W mode is indicated in the Tuning screen or in the Control screen.

ITEM TYPE	ITEM	Symbol	Data Description	Data Range	Default	COLD start initialization	R/W Mode R: Read, W: Write, R/W: R/W-enabled, -: R/W-disabled Note: r and r/w: Read and read/write for validate action or monitor run status by CX-Process Tool or Monitor, (S): Initial setting data, (O): Operation data				Data Length (bytes)
							According to CX-Process Tool	According to CX-Process Monitor *1	According to ITEM Setting block	According to Step Ladder Program	
Contact input	000		Stop block operation command (0: Cancel stop, 1: Stop)	0, 1	0	–	–	–	–	–	1
Parameter	001		Comment	23 characters	Block name	–	R/W(S)	–	–	–	24
	002		Block Model: 1-Block Send Terminal to Computer	403	403	–	R/W(S)	–	–	–	2
Special	003		Execution error display 0: Normal, Other: Error (See Appendix "Execution Error Code List.")		0000	–	r	–	–	–	2
Parameter	004		Operation cycle (sec) 0: Common, 1: 0.1, 2: 0.2, 3: 0.5, 4: 1, 5: 2	0 to 5	0	–	R/W(S)	–	–	–	2
Block address specification	011		Source designated Control block address	001 to 032	001	–	R/W(S)	–	–	–	2

Note To send data of the Basic PID block (Block Model 011) or the Advanced PID block (Block Model 012) to CX-Process Monitor by the 1-Block Send Terminal to Computer (Block Model 403), set the operation cycle of the Send to Computer blocks to the same or longer than that of the Basic PID or Advanced PID blocks. If the operation cycle of Send to Computer blocks is set to a shorter value, the Set Point momentarily becomes 0 when a cold start is performed.

Block Model	Block Name	Block Address
<404>	4-Block Send Terminal to Computer	501 to 532

Outline

This function block is for specifying the block address of four Control blocks or some Operation blocks to be sent to the computer.

•To monitor the state of four of the following Control blocks or some Operation blocks on CX-Process Monitor, or to change the Set Point or other settings on the Control block at the same time, be sure to connect the Control block or some Operation blocks as the source of this function block, and set the monitor tags for the function blocks and each ITEM using CX-Process Tool.

•The following Control blocks and Sequential Operation blocks can be specified for monitoring:

001: 2-position ON/OFF
002: 3-position ON/OFF
011: Basic PID
012: Advanced PID
031: Indication and Setting
032: Indication and Operation
033: Ratio Setting
034: Indicator
111: High/Low Limit
157: Segment Program 2
205: Timer
208: Counter
221: ON/OFF Valve Manipulator
222: Motor Manipulator
223: Reversible Motor Manipulator
224: Motor Opening Manipulator

Note1 Control blocks that are designed as the source by the 4-Block Send Terminal to Computer block (Block Model 404) cannot be registered to the Tuning screen on CX-Process Monitor. To register the above Control blocks in the Tuning screen, be sure to use the 1-Block Send Terminal to Computer block (Block Model 403).

Note2 The ITEMs that can be sent to CX-Process Monitor by 4-Block Send Terminal to Computer block (Block Model 404) are determined by the default settings of each function block. (Fixed names called "tag ITEMs" are assigned to each ITEM.) To send ITEMs other than these (parameters having contact or analog values) to CX-Process Monitor, specify the relevant ITEM as the source in the AO to Terminal block (Block Model 402) or DO to Terminal block (Block Model 401).

•Up to three Loop Control Units can be mounted on a single PLC. However, only 32 block addresses (501 to 532) can be used on a single PLC. So, set the block addresses for each of the Loop Control Units to unique values.

Block diagram

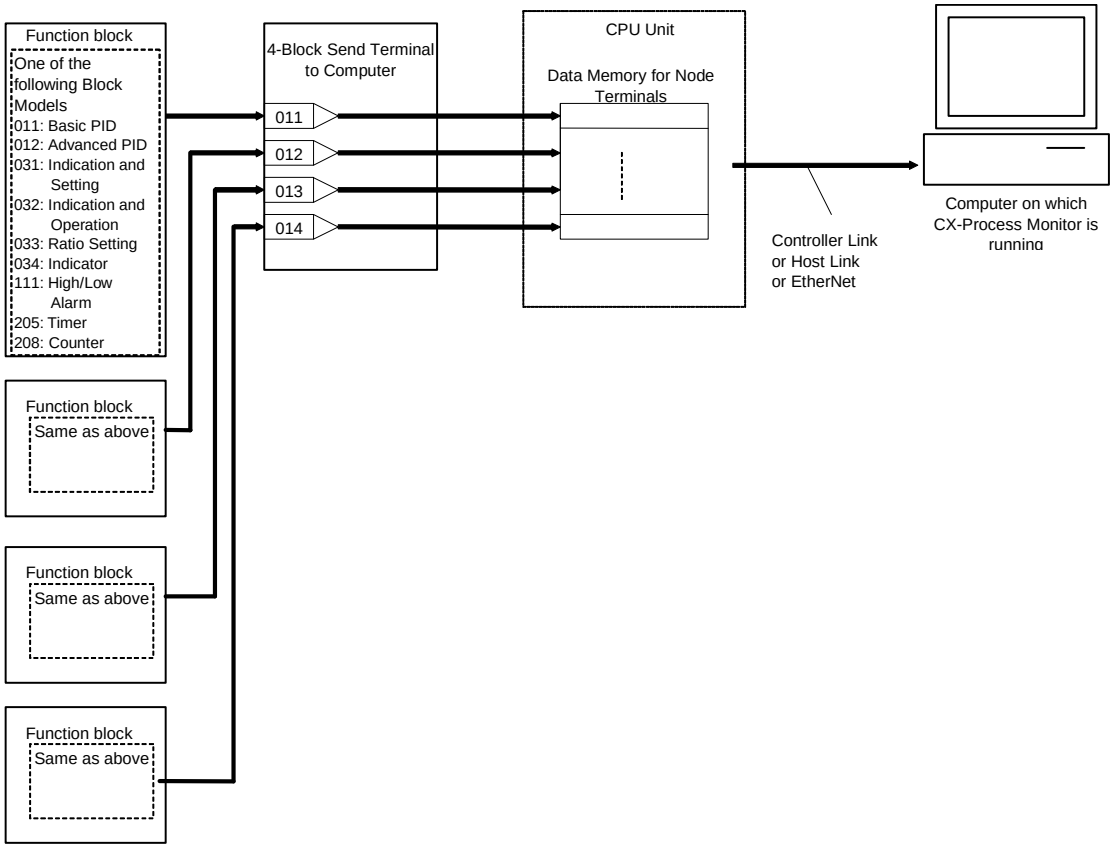

ITEM list

*1:On the CX-Process Monitor, the R/W mode is indicated in the Tuning screen or in the Control screen.

ITEM TYPE	ITEM	Symbol	Data Description	Data Range	Default	COLD start initialization	R/W Mode R: Read, W: Write, R/W: R/W-enabled, -: R/W-disabled Note: r and r/w: Read and read/write for validate action or monitor run status by CX-Process Tool or Monitor, (S): Initial setting data, (O): Operation data				Data Length (bytes)
							According to CX-Process Tool	According to CX-Process Monitor *1	According to ITEM Setting block	According to Step Ladder Program	
Contact input	000		Stop block operation command (0: Cancel stop, 1: Stop)	0, 1	0	–	–	–	–	–	1
Parameter	001		Comment	23 characters	Block name	–	R/W(S)	–	–	–	24
	002		Block Model: 4-Block Send Terminal to Computer	404	404	–	R/W(S)	–	–	–	2
Special	003		Error indication 0: Normal, Other: Error (See Appendix "Execution Error Code List.")		0000	–	r	–	–	–	2
Parameter	004		Operation cycle (sec) 0: Common, 1: 0.1, 2: 0.2, 3: 0.5, 4: 1, 5: 2	0 to 5	0	–	R/W(S)	–	–	–	2
Block address specification	011		No.1 source designated Control block address (000: Not registered)	000 to 999	000	–	R/W(S)	–	–	–	2
	to					–					
	014		No.4 source designated Control block address (000: Not registered)	000 to 999	000	–	R/W(S)	–	–	–	2

Note To send data of the Basic PID block (Block Model 011) or the Advanced PID block (Block Model 012) to CX-Process Monitor by the 4-Block Send Terminal to Computer (Block Model 404), set the operation cycle of the Send to Computer blocks to the same or longer than that of the Basic PID or Advanced PID blocks. If the operation cycle of Send to Computer blocks is set to a shorter value, the Set Point momentarily becomes 0 when a cold start is performed.

Block Model	Block Name	Block Address
<407>	DO Terminal to All Nodes	550 to 599

Outline

This function block sends 32 contact signals to other nodes (PLC or computer).

- Up to three Loop Control Units can be mounted on a single PLC. The block address of the PLC is shared by these three Loop Control Units. So, set the block addresses for each of the Loop Control Units to unique values.
- There are two ways of designating the contacts as the source:
  - Batch designation of multiple contacts
  - Individual designation: Contacts are designated by the Step Ladder Program block (Block Model 301) or Contact Distributor block (Block Model 201).

Block diagram

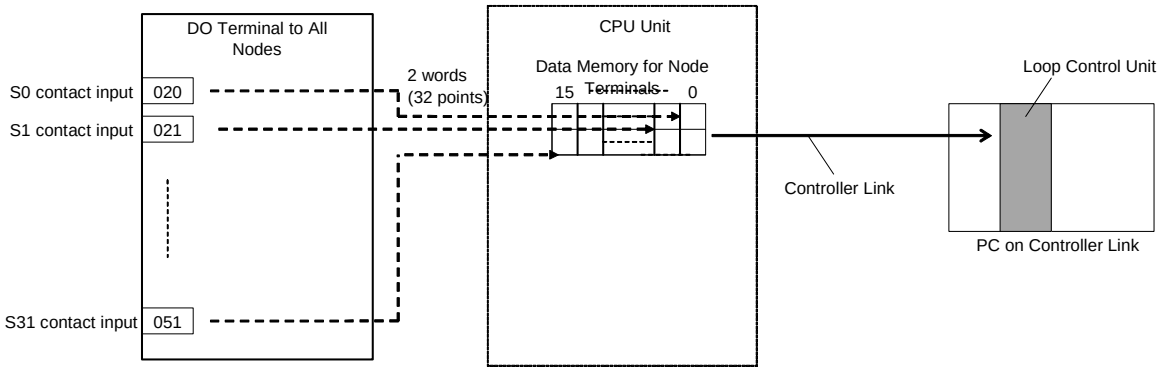

ITEM list

ITEM TYPE	ITEM	Symbol	Data Description	Data Range	Default	R/W Mode R: Read, W: Write, R/W: R/W-enabled, –: R/W-disabled Note: r and r/w: Read and read/write for validate action or monitor run status by CX-Process Tool or Monitor, (S): Initial setting data, (O): Operation data				Data Length (bytes)
						According to CX-Process Tool	–	According to ITEM Setting block	According to Step Ladder Program	
Contact input	000		Stop block operation command (0: Cancel stop, 1: Stop)	0, 1	0	–	–	–	–	1
Parameter	001		Comment	23 characters	Block name	R/W(S)	–	–	–	24
	002		Block Model: DO Terminal to all nodes	407	407	R/W(S)	–	–	–	2
Special	003		Execution error display 0: Normal, Other: Error (See Appendix "Execution Error Code List.")		0000	r	–	–	–	2
Parameter	004		Operation cycle (sec) 0: Common, 1: 0.1, 2: 0.2, 3: 0.5, 4: 1, 5: 2	0 to 5	0	R/W(S)	–	–	–	2
Block address specification	011	DX1	Terminal 1 BBBIII: Source designation block address and leading ITEM number PPP: 001 to 032: number of input points JJJ: 020 to 147: leading ITEM number of self block	BBBIII-PPPJJJ	000000 000000	R/W(S)	–	–		8
	012	DX2	Terminal 2	BBBIII-PPPJJJ	000000 000000	R/W(S)	–	–		8
Contact input	020	S0	Contact input	0, 1	0	–	R	–	R/W	1
	to									
	051	S31	Contact input	0, 1	0	–	R	–	R/W	1

Block Model	Block Name	Block Address
<408>	AO Terminal to All Nodes	550 to 599

Outline

This function block sends two contact signals to other nodes (PLC or computer).

•Up to three Loop Control Units can be mounted on a single PLC. The block address of the PLC is shared by these three Loop Control Units. So, set the block addresses for each of the Loop Control Units to unique values.

Block diagram

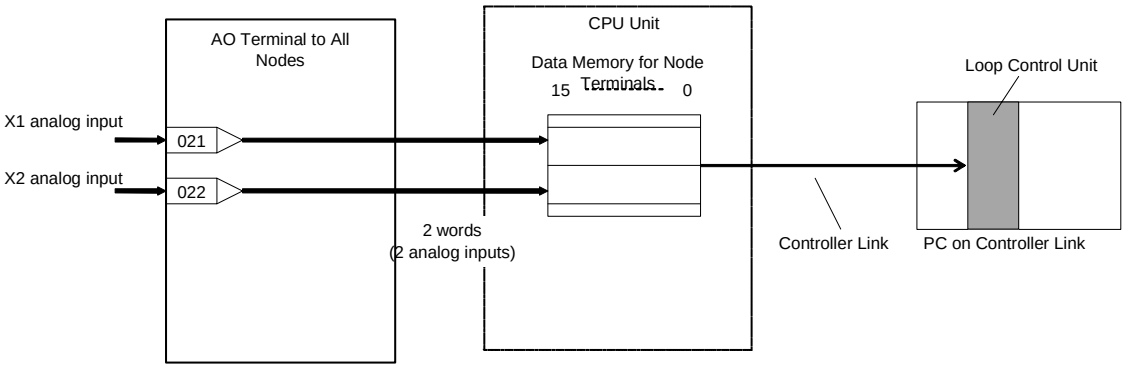

ITEM list

*1:On the CX-Process Monitor, the R/W mode is indicated in the Tuning screen or in the Control screen.

ITEM TYPE	ITEM	Symbol	Data Description	Data Range	Default	COLD start initialization	R/W Mode R: Read, W: Write, R/W: R/W-enabled, -: R/W-disabled Note: r and r/w: Read and read/write for validate action or monitor run status by CX-Process Tool or Monitor, (S): Initial setting data, (O): Operation data				Data Length (bytes)
							According to CX-Process Tool	According to CX-Process Monitor *1	According to ITEM Setting block	According to Step Ladder Program	
Contact input	000		Stop block operation command (0: Cancel stop, 1: Stop)	0, 1	0	–	–	–	–	–	1
Parameter	001		Comment	23 characters	Block name	–	R/W(S)	–	–	–	24
	002		Block Model: AO Terminal fro All Nodes	408	408	–	R/W(S)	–	–	–	2
Special	003		Execution error display 0: Normal, Other: Error (See Appendix "Execution Error Code List.")		0000	–	r	–	–	–	2
Parameter	004		Operation cycle (sec) 0: Common, 1: 0.1, 2: 0.2, 3: 0.5, 4: 1, 5: 2	0 to 5	0	–	R/W(S)	–	–	–	2
Analog input connection information	021		X1 source designation (BBB: Block address, III: ITEM No.)	BBBIII	000000	–	R/W(S)	–	–	–	4
	022		X2 source designation (BBB: Block address, III: ITEM No.)	BBBIII	000000	–	R/W(S)	–	–	–	4
Analog input	031	X1	Analog input	±320.00%	0.00	Yes	r	R	–	–	2
	032	X2	Analog input	±320.00%	0.00	Yes	r	R	–	–	2

Block Model	Block Name	Block Address
<409>	DO Terminal Settings from Computer	550 to 599

Outline

This function block receives contact signals from the computer by issuing the FINS WRITE ITEM commands (command code 0241 and 0243 Hex) to this function block from the computer.

- Contact signals that are received can also be used for internal Loop Control Unit operations.
- If necessary, FINS commands can be re-issued to other nodes (PLC or computer).
- To write contact signals to contact output ITEMs in this function block from CX-Process Monitor, CX-Process Tool must be used to set the tag numbers to the ITEMs. (Note, however, that re-issue to network must be set to "ON". This enables monitoring for checking the results of writing on CX-Process Monitor.)
- Up to three Loop Control Units can be mounted on a single PLC. The block address of the PLC is shared by these three Loop Control Units. So, set the block addresses for each of the Loop Control Units to unique values.

Block diagram

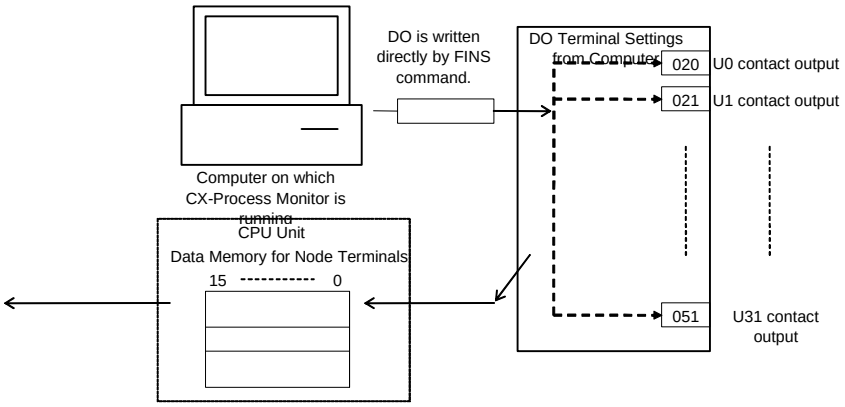

ITEM list

*1:On the CX-Process Monitor, the R/W mode is indicated in the Tuning screen or in the Control screen.

ITEM TYPE	ITEM	Symbol	Data Description	Data Range	Default	COLD start initialization	R/W Mode R: Read, W: Write, R/W: R/W-enabled, -: R/W-disabled Note: r and r/w: Read and read/write for validate action or monitor run status by CX-Process Tool or Monitor, (S): Initial setting data, (O): Operation data				Data Length (bytes)
							According to CX-Process Tool	According to CX-Process Monitor *1	According to ITEM Setting block	According to Step Ladder Program	
Contact input	000		Stop block operation command (0: Cancel stop, 1: Stop)	0, 1	0	–	–	–	–	–	1
Parameter	001		Comment	23 characters	Block name	–	R/W(S)	–	–	–	24
	002		Block Model: DO Terminal Settings from Computer	409	409	–	R/W(S)	–	–		2
Special	003		Execution error display 0: Normal, Other: Error (See Appendix "Execution Error Code List.")		0000	–	r	–	–		2
Parameter	004		Operation cycle (sec) 0: Common, 1: 0.1, 2: 0.2, 3: 0.5, 4: 1, 5: 2	0 to 5	0	–	R/W(S)	–	–		2
Parameter	007		Re-issue to network 0: Not used, 1: Used	0, 1	1	–	R/W(S)	–	–		1
Contact output Parameter	020	U0	Contact output	0, 1	0	Yes	R/W(O)	R/W	–		1
	to					Yes					
	051	U31	Contact output	0, 1	0	Yes	R/W(O)	R/W	–		1

Block Model	Block Name	Block Address
<410>	AO Terminal Settings from Computer	550 to 599

Outline

This function block receives analog signals from the computer by issuing the FINS WRITE ITEM commands (command code 0241 and 0243 Hex) to this function block from the computer.

- Analog signals that are received can also be used for internal Loop Control Unit operations.
- If necessary, FINS commands can be re-issued to other nodes (PLC or computer).
- To write contact signals to contact output ITEMs in this function block from CX-Process Monitor, CX-Process Tool must be used to set the tag numbers to the ITEMs. (Note, however, that re-issue to network must be set to "ON". This enables monitoring for checking the results of writing on CX-Process Monitor.)
- Up to three Loop Control Units can be mounted on a single PLC. The block address of the PLC is shared by these three Loop Control Units. So, set the block addresses for each of the Loop Control Units to unique values.

Block diagram

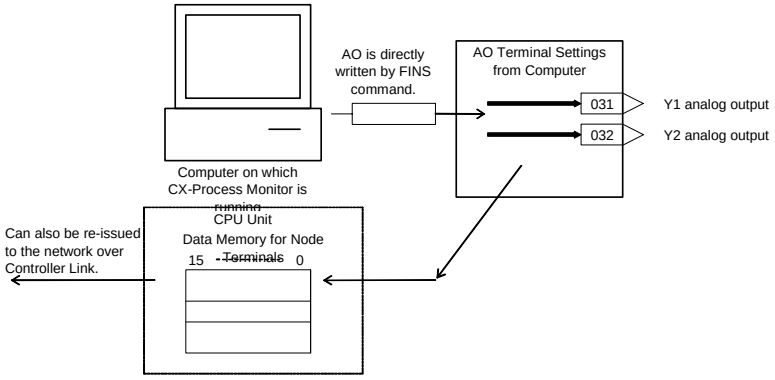

ITEM list

*1:On the CX-Process Monitor, the R/W mode is indicated in the Tuning screen or in the Control screen.

ITEM TYPE	ITEM	Symbol	Data Description	Data Range	Default	COLD start initialization	R/W Mode R: Read, W: Write, R/W: R/W-enabled, -: R/W-disabled Note: r and r/w: Read and read/write for validate action or monitor run status by CX-Process Tool or Monitor, (S): Initial setting data, (O): Operation data				Data Length (bytes)
							According to CX-Process Tool	According to CX-Process Monitor *1	According to ITEM Setting block	According to Step Ladder Program	
Contact input	000		Stop block operation command (0: Cancel stop, 1: Stop)	0, 1	0	–	–	–	–	–	1
Parameter	001		Comment	23 characters	Block name	–	R/W(S)	–	–	–	24
	002		Block Model: AO Terminal Settings from Computer	410	410	–	R/W(S)	–	–	–	2
Special	003		Execution error display 0: Normal, Other: Error (See Appendix "Execution Error Code List.")		0000	–	r	–	–	–	2
Parameter	004		Operation cycle (sec) 0: Common, 1: 0.1, 2: 0.2, 3: 0.5, 4: 1, 5: 2	0 to 5	0	–	R/W(S)	–	–	–	2
Parameter	007		Re-issue to network 0: Not used, 1: Used	0, 1	1	–	R/W(S)	–	–	–	1
Analog output	031	Y1	Analog output	±320.00%	0.00	Yes	R/W(O)	R/W	–	–	2
	032	Y2	Analog output	±320.00%	0.00	Yes	R/W(O)	R/W	–	–	2

Block Model	Block Name	Block Address
<414>	DI Terminal from All Nodes	600 to 699

Outline

This function block receives data sent by the DO Terminal to All Nodes block (Block Model 407) on another Loop Control Unit. 32 contact signals sent from other nodes are received.

•Specify the contacts to be input by the source node address and source block address.

Block diagram

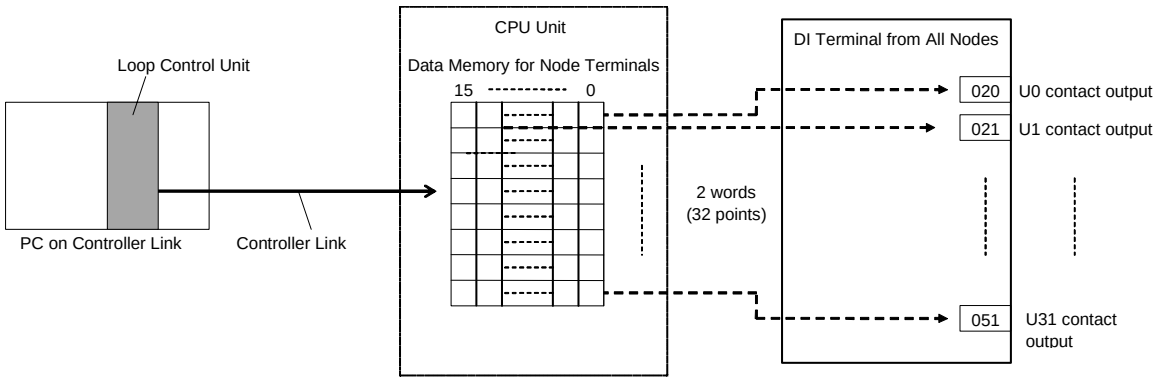

ITEM list

*1:On the CX-Process Monitor, the R/W mode is indicated in the Tuning screen or in the Control screen.

ITEM TYPE	ITEM	Symbol	Data Description	Data Range	Default	COLD start initialization	R/W Mode R: Read, W: Write, R/W: R/W-enabled, -: R/W-disabled Note: r and r/w: Read and read/write for validate action or monitor run status by CX-Process Tool or Monitor, (S): Initial setting data, (O): Operation data				Data Length (bytes)
							According to CX-Process Tool	According to CX-Process Monitor *1	According to ITEM Setting block	According to Step Ladder Program	
Contact input	000		Stop block operation command (0: Cancel stop, 1: Stop)	0, 1	0	–	–	–	–	–	1
Parameter	001		Comment	23 characters	Block name	–	R/W(S)	–	–	–	24
	002		Block Model: DI Terminal from All Nodes	414	414	–	R/W(S)	–	–	–	2
Special	003		Execution error display 0: Normal, Other: Error (See Appendix "Execution Error Code List.")		0000	–	r	–	–	–	2
Parameter	004		Operation cycle (sec) 0: Common, 1: 0.1, 2: 0.2, 3: 0.5, 4: 1, 5: 2	0 to 5	0	–	R/W(S)	–	–	–	2
Parameter	007		Source node address 0: Self node (see Note)	0 to 32	1	–	R/W(S)	–	–	–	2
	008		Source block address	550 to 599	550	–	R/W(S)	–	–	–	2
Contact input	020	U0	Contact output (field input)	0, 1	0	Yes	–	–	–	R/W	1
	to					Yes					
	051	U31	Contact output (field input)	0, 1	0	Yes	–	–	–	R/W	1

Note To receive a value sent by the self node by the DO Terminal to All Nodes block (Block Model 407), set the source node address to 0 (self node).

Block Model	Block Name	Block Address
<415>	AI Terminal from All Nodes	600 to 699

Outline

This function block receives data sent by the AO Terminals to All Nodes block (Block Model 408) on another Loop Control Unit. 2 contact signals sent from other nodes are received.

•Specify the data to be input by the source node address and source block address.

Block diagram

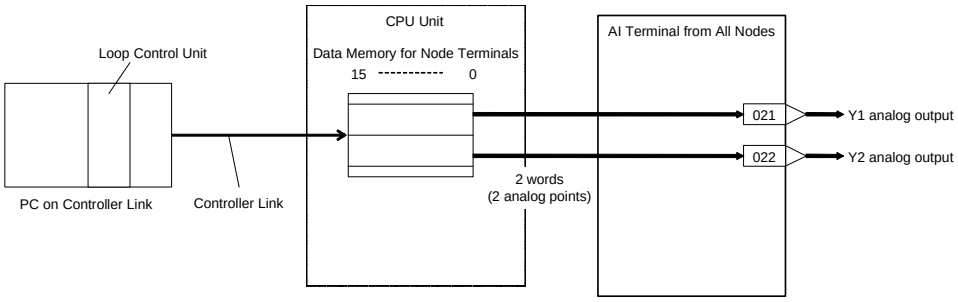

ITEM list

*1:On the CX-Process Monitor, the R/W mode is indicated in the Tuning screen or in the Control screen.

ITEM TYPE	ITEM	Symbol	Data Description	Data Range	Default	COLD start initialization	R/W Mode R: Read, W: Write, R/W: R/W-enabled, -: R/W-disabled Note: r and r/w: Read and read/write for validate action or monitor run status by CX-Process Tool or Monitor, (S): Initial setting data, (O): Operation data				Data Length (bytes)
							According to CX-Process Tool	According to CX-Process Monitor *1	According to ITEM Setting block	According to Step Ladder Program	
Contact input	000		Stop block operation command (0: Cancel stop, 1: Stop)	0, 1	0	–	–	–	–	–	1
Parameter	001		Comment	23 characters	Block name	–	R/W(S)	–	–	–	24
	002		Block Model: Ai Terminal from All Nodes	415	415	–	R/W(S)	–	–	–	2
Special	003		Execution error display 0: Normal, Other: Error (See Appendix "Execution Error Code List.")		0000	–	r	–	–	–	2
Parameter	004		Operation cycle (sec) 0: Common, 1: 0.1, 2: 0.2, 3: 0.5, 4: 1, 5: 2	0 to 5	0	–	R/W(S)	–	–	–	2
Parameter	007		Source node address 0: Self node	0 to 32	1	–	R/W(S)	–	–	–	2
	008		Source block address	550 to 599	550	–	R/W(S)	–	–	–	2
Analog output	021	Y1	Analog output (field input)	±320.00%	0.00	Yes	r/w	–	–	–	2
	022	Y2	Analog output (field input)	±320.00%	0.00	Yes	r/w	–	–	–	2

Note: To receive a value sent by the self node by the AO Terminal to All Nodes block (Block Model 408), set the source node address to 0 (self node).

Block Model	Block Name	Block Address
<451>	DI Terminal from CPU Unit	861 to 876

Outline

This function block inputs contact data from CPU Unit I/O memory.

• Types of CPU Unit I/O memory area to which data can be input
- •CIO (channel I/O) Area: Data of any address can be input
  This area is mainly used for input of the following remote I/O data that is not supported on the Field Terminals:

  Example)
  CompoBus/D Remote I/O, CompoBus/S Remote I/O, SYSBUS Remote I/O

- •W: Work Area (W)
- •H: Holding Area (H)
- •D: Data Memory (D)
- •E0: Extended Data Memory (E) bank No. 0 only

Block diagram

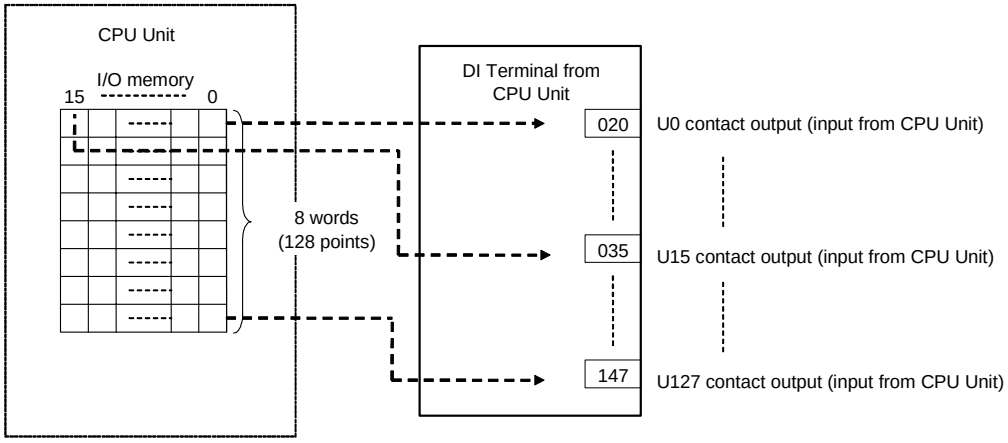

ITEM list

*1:On the CX-Process Monitor, the R/W mode is indicated in the Tuning screen or in the Control screen.

ITEM TYPE	ITEM	Symbol	Data Description	Data Range	Default	COLD start initialization	R/W Mode R: Read, W: Write, R/W: R/W-enabled, -: R/W-disabled Note: r and r/w: Read and read/write for validate action or monitor run status by CX-Process Tool or Monitor, (S): Initial setting data, (O): Operation data				Data Length (bytes)
							According to CX-Process Tool	According to CX-Process Monitor *1	According to ITEM Setting block	According to Step Ladder Program	
Contact input	000		Stop block operation command (0: Cancel stop, 1: Stop)	0, 1	0	–	–	–	–	–	1
Parameter	001		Comment	23 characters	Block name	–	R/W(S)	–	–	–	24
	002		Block Model: DI Terminal from CPU Unit	451	451	–	R/W(S)	–	–	–	2
Special	003		Execution error display 0: Normal, Other: Error (See Appendix "Execution Error Code List.")		0000	–	r	–	–	–	2
Parameter	004		Operation cycle (sec) 0: Common, 1: 0.1, 2: 0.2, 3: 0.5, 4: 1, 5: 2	0 to 5	0	–	R/W(S)	–	–	–	2
Parameter	007		CPU Unit I/O memory area type 0: CIO (Channel I/O) Area, 1: W (Work Area), 2: H (Holding Area), 3: D (Data Memory), 4: E0 (Extended Data Memory [E] bank No.)	0 to 4	3	–	R/W(S)	–	–	–	2
	008		Leading address	0 to 32767	0	–	R/W(S)	–	–	–	2
	009		Number of words (number of input contacts = number of words x 16 points)	1 to 8 (words)	8	–	R/W(S)	–	–	–	1
Contact input	020	U0	Contact output (input from CPU Unit, 1 word bit 00)	0, 1	0	Yes	–	–	–	R	1
	to		to			Yes					
	035	U15	Contact output (input from CPU Unit, 1 word bit 15)	0, 1	0	Yes	–	–	–	R	1
	036	U16	Contact output (input from CPU Unit, 2 words bit 00)	0, 1	0	Yes	–	–	–	R	1
	to		to			Yes					
	051	U31	Contact output (input from CPU Unit, 2 words bit 15)	0, 1	0	Yes	–	–	–	R	1
	052	U32	Contact output (input from CPU Unit, 3 words bit 00)	0, 1	0	Yes	–	–	–	R	1
	to		to			Yes					
	067	U47	Contact output (input from CPU Unit, 3 words bit 15)	0, 1	0	Yes	–	–	–	R	1
	068	U48	Contact output (input from CPU Unit, 4 words bit 00)	0, 1	0	Yes	–	–	–	R	1
	to		to			Yes					
	083	U63	Contact output (input from CPU Unit, 4 words bit 15)	0, 1	0	Yes	–	–	–	R	1
	084	U64	Contact output (input from CPU Unit, 5 words bit 00)	0, 1	0	Yes	–	–	–	R	1
	to		to			Yes					
	099	U79	Contact output (input from CPU Unit, 5 words bit 15)	0, 1	0	Yes	–	–	–	R	1
Contact input	100	U80	Contact output (input from CPU Unit, 6 words bit 00)	0, 1	0	Yes	–	–	–	R	1
	to		to			Yes					
	115	U95	Contact output (input from CPU Unit, 6 words bit 15)	0, 1	0	Yes	–	–	–	R	1
	116	U96	Contact output (input from CPU Unit, 7 words bit 00)	0, 1	0	Yes	–	–	–	R	1
	to		to			Yes					
Contact input	131	U111	Contact output (input from CPU Unit, 7 words bit 15)	0, 1	0	Yes	–	–	–	R	1
	132	U112	Contact output (input from CPU Unit, 8 words bit 00)	0, 1	0	Yes	–	–	–	R	1
	to		to			Yes					
	147	U127	Contact output (input from CPU Unit, 8 words bit 15)	0, 1	0	Yes	–	–	–	R	1

Block Model	Block Name	Block Address
<452>	DO Terminal to CPU Unit	861 to 876

Outline

This function block outputs contact signals to CPU Unit I/O memory.

•Types of CPU Unit I/O memory area to which data can be output
- •CIO (channel I/O) Area: Data of any address can be output
  This area is mainly used for output of the following remote I/O data that is not supported on the Field Terminals:

  Example)
  CompoBus/D Remote I/O, CompoBus/S Remote I/O, SYSBUS Remote I/O

- •W: Work Area (W)
- •H: Holding Area (H)
- •D: Data Memory (D)
- •E0: Extended Data Memory (E) (bank No. 0 only)

Block diagram

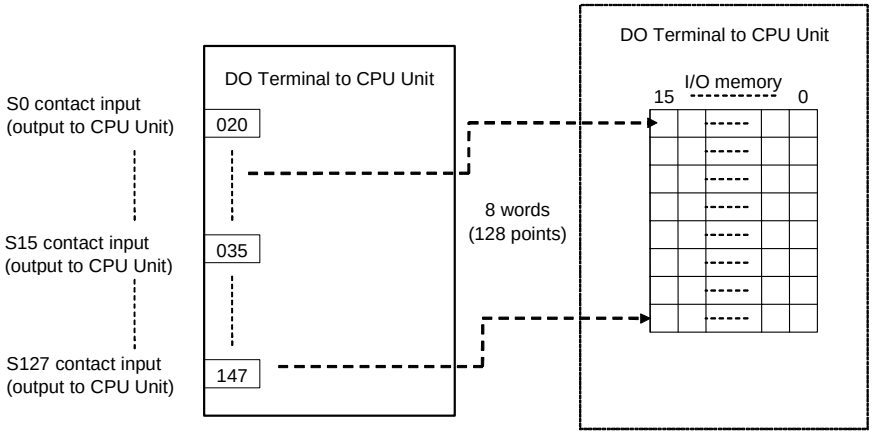

ITEM list

*1:On the CX-Process Monitor, the R/W mode is indicated in the Tuning screen or in the Control screen.

ITEM TYPE	ITEM	Symbol	Data Description	Data Range	Default	COLD start initialization	R/W Mode R: Read, W: Write, R/W: R/W-enabled, -: R/W-disabled Note: r and r/w: Read and read/write for validate action or monitor run status by CX-Process Tool or Monitor, (S): Initial setting data, (O): Operation data				Data Length (bytes)
							According to CX-Process Tool	According to CX-Process Monitor *1	According to ITEM Setting block	According to Step Ladder Program	
Contact input	000		Stop block operation command (0: Cancel stop, 1: Stop)	0, 1	0	–	–	–	–	–	1
Parameter	001		Comment	23 characters	Block name	–	R/W(S)	–	–	–	24
	002		Block Model: DO Terminal to CPU Unit	452	452	–	R/W(S)	–	–	–	2
Special	003		Execution error display 0: Normal, Other: Error (See Appendix "Execution Error Code List")		0000	–	r	–	–	–	2
Parameter	004		Operation cycle (sec) 0: Common, 1: 0.1, 2: 0.2, 3: 0.5, 4: 1, 5: 2	0 to 5	0	–	R/W(S)	–	–	–	2
	007		CPU Unit I/O memory area type 0: CIO (Channel I/O) Area, 1: W (Work Area), 2: H (Holding Area), 3: D (Data Memory), 4: E0 (Extended Data Memory [E] bank No.)	0 to 4	3	–	R/W(S)	–	–	–	2
	008		Leading address	0 to 32767	32767	–	R/W(S)	–	–	–	2
	009		Number of words (number of input contacts = number of words x 16 points)	1 to 8 (words)	8	–	R/W(S)	–	–	–	1
Contact input	020	S0	Contact input (output to CPU unit, 1 word bit 00)	0, 1	0	Yes	–	–	–	R/W	1
	to		to								
	035	S15	Contact input (output to CPU unit, 1 word bit 15)	0, 1	0	Yes	–	–	–	R/W	1
	036	S16	Contact input (output to CPU unit, 2 words bit 00)	0, 1	0	Yes	–	–	–	R/W	1
	to		to								
	051	S31	Contact input (output to CPU unit, 2 words bit 15)	0, 1	0	Yes	–	–	–	R/W	1
	052	S32	Contact input (output to CPU unit, 3 words bit 00)	0, 1	0	Yes	–	–	–	R/W	1
	to		to								
	067	S47	Contact input (output to CPU unit, 3 words bit 15)	0, 1	0	Yes	–	–	–	R/W	1
	068	S48	Contact input (output to CPU unit, 4 words bit 00)	0, 1	0	Yes	–	–	–	R/W	1
	to		to								
	083	S63	Contact input (output to CPU unit, 4 words bit 15)	0, 1	0	Yes	–	–	–	R/W	1
	084	S64	Contact input (output to CPU unit, 5 words bit 00)	0, 1	0	Yes	–	–	–	R/W	1
	to		to								
	099	S79	Contact input (output to CPU unit, 5 words bit 15)	0, 1	0	Yes	–	–	–	R/W	1
	100	S80	Contact input (output to CPU unit, 6 words bit 00)	0, 1	0	Yes	–	–	–	R/W	1
	to		to								
	115	S95	Contact input (output to CPU unit, 6 words bit 15)	0, 1	0	Yes	–	–	–	R/W	1
	116	S96	Contact input (output to CPU unit, 7 words bit 00)	0, 1	0	Yes	–	–	–	R/W	1
	to		to								
	131	S111	Contact input (output to CPU unit, 7 words bit 15)	0, 1	0	Yes	–	–	–	R/W	1
	132	S112	Contact input (output to CPU unit, 8 words bit 00)	0, 1	0	Yes	–	–	–	R/W	1
	to		to								
	147	S127	Contact input (output to CPU unit, 8 words bit 15)	0, 1	0	Yes	–	–	–	R/W	1

Block Model	Block Name	Block Address
<453>	AI Terminal from CPU Unit	861 to 876

Outline

This function block inputs analog data from CPU Unit I/O memory.

•Types of CPU Unit I/O memory area from which data can be input
•CIO (channel I/O) Area: Data of any address can be input.
This area is mainly used for input of the following remote I/O data that is not supported on the Field Terminals:

Example
CompoBus/D Remote I/O, CompoBus/S Remote I/O, SYSBUS Remote I/O

•W: Work Area (W)
•H: Holding Area (H)
•D: Data Memory (D)
•E0: Extended Data Memory (E) (bank No. 0 only)

Analog data for the number of words specified by ITEM009 from the leading word address of the I/O memory specified by ITEM008 are treated as signed binary data (two's complement taken for minus numbers) and converted to signed decimal. The range of the resulting values is converted to 0.00 to 100.00% according to the input range (specified by ITEM010 to ITEM012) to be read to Y1 to Y8. (Actual data can be output within the range -320.00 to +320.00%.)

Example
To read 100.00% when 4000 (decimal) is stored and read 0.00% when 0 (decimal) is stored on word data currently stored by 0000 to 0FA0 Hex (decimal 0 to 4000), set 0%: 0 and 100%: 4000 as the input range.

•Either one range can be set for all points (Y1 to Y8) or a different range can be set for each point (supported from version 2.50 of the Loop Control Unit).

Note1: The "input range" described here does not refer to scaling defined by the user. Set the range of the data currently stored to the word data on the CPU Unit correctly based on the values to be stored to the specified words on the CPU Unit. In the above example, 100.00% is read to Y by 01F4 Hex (decimal 500) when 0%: 0 and 100%: 500 are set as the input range instead of 0%: 0 and 100%: 4000.
Note2: Data that can be read from the CPU Unit is 4-digit Hex 8300 to FFFF and 0000 to 7D00 (decimal -32000 to +32000).

Block diagram

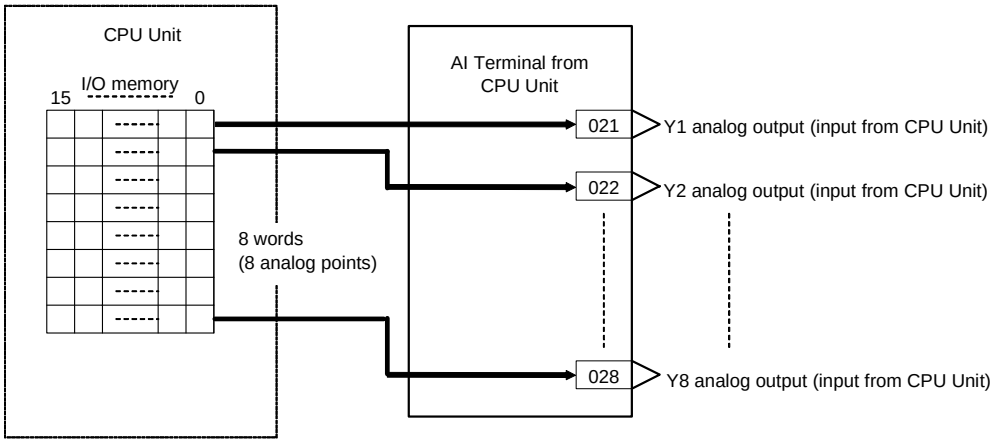

ITEM list

*1:On the CX-Process Monitor, the R/W mode is indicated in the Tuning screen or in the Control screen.

ITEM TYPE	ITEM	Symbol	Data Description	Data Range	Default	COLD start initialization	R/W Mode R: Read, W: Write, R/W: R/W-enabled, -: R/W-disabled Note: r and r/w: Read and read/write for validate action or monitor run status by CX-Process Tool or Monitor, (S): Initial setting data, (O): Operation data				Data Length (bytes)
							According to CX-Process Tool	According to CX-Process Monitor *1	According to ITEM Setting block	According to Step Ladder Program	
Contact input	000		Stop block operation command (0: Cancel stop, 1: Stop)	0, 1	0	–	–	–	–	–	1
Parameter	001		Comment	23 characters	Block name	–	R/W(S)	–	–	–	24
	002		Block Model: AI Terminal from CPU Unit	453	453	–	R/W(S)	–	–	–	2
Special	003		Execution error display 0: Normal, Other: Error (See Appendix "Execution Error Code List.")		0000	–	r	–	–	–	2
Parameter	004		Operation cycle (sec) 0: Common, 1: 0.1, 2: 0.2, 3: 0.5, 4: 1, 5: 2	0 to 5	0	–	R/W(S)	–	–	–	2
	007		CPU Unit I/O memory area type 0: CIO (Channel I/O) Area, 1: W (Work Area), 2: H (Holding Area), 3: D (Data Memory), 4: E0 (Extended Data Memory [E] bank No.)	0 to 4	3	–	R/W(S)	–	–	–	2
	008		Leading address	0 to 32767	0	–	R/W(S)	–	–	–	2
	009		Number of words (=number of analog points)	1 to 8 (words)	8	–	R/W(S)	–	–	–	2
	010		Common or Y1 input range conversion (0: 0 to 10000, 1: 0 to 4000, 2: –2000 to 2000, 3: 0 to 6000, 4: –3000 to 3000, 9: Range specified at ITEM011 and ITEM012) Note: ITEM 013 determines if this parameter is for all ranges or only the Y1 input range.	0 to 4, 9	0	–	R/W(S)	–	–	–	1
	011		0% value for all ranges or Y1 range (Specify which value is to be taken as 0% after signed binary-to-decimal conversion.)	±32000	0	–	R/W(S)	–	–	–	2
	012		100% value for all ranges or Y1 range (Specify which value is to be taken as 100% after signed binary-to-decimal conversion.)	±32000	10000	–	R/W(S)	–	–	–	2
	013*1		Range conversion method 0: Common setting for all ranges, 1:Individual setting for each range	0, 1	0	–	R/W (S)	–	–	–	1
Analog output	021	Y1	Analog output (input value from CPU Unit) 1	±320.00%	0.00	Yes	r/w	–	–	–	2
	to		to			Yes					
	028	Y8	Analog output (input value from CPU Unit) 8	±320.00%	0.00	Yes	r/w	–	–	–	2

Individual range settings

*1:On the CX-Process Monitor, the R/W mode is indicated in the Tuning screen or in the Control screen.

ITEM TYPE	ITEM	Symbol	Data Description	Data Range	Default	COLD start initialization	R/W Mode R: Read, W: Write, R/W: R/W-enabled, -: R/W-disabled Note: r and r/w: Read and read/write for validate action or monitor run status by CX-Process Tool or Monitor, (S): Initial setting data, (O): Operation data				Data Length (bytes)
							According to CX-Process Tool	According to CX-Process Monitor *1	According to ITEM Setting block	According to Step Ladder Program	
Parameter	040*1		Y2 input range conversion (0: 0 to 10000, 1: 0 to 4000, 2: –2000 to 2000, 3: 0 to 6000, 4: –3000 to 3000, 9: Range specified at ITEM 041 and 042)	0 to 4, 9	0	–	R/W(S)	–	–	–	1
	041*1		0% value for Y2 range	±32000	0	–	R/W(S)	–	–	–	2
	042*1		100% value for Y2 range	±32000	10000	–	R/W(S)	–	–	–	2
	043*1		Y3 input range conversion (0: 0 to 10000, 1: 0 to 4000, 2: –2000 to 2000, 3: 0 to 6000, 4: –3000 to 3000, 9: Range specified at ITEM 044 and 045)	0 to 4, 9	0	–	R/W(S)	–	–	–	1
	044*1		0% value for Y3 range	±32000	0	–	R/W(S)	–	–	–	2
	045*1		100% value for Y3 range	±32000	10000	–	R/W(S)	–	–	–	2
	046*1		Y4 input range conversion (0: 0 to 10000, 1: 0 to 4000, 2: –2000 to 2000, 3: 0 to 6000, 4: –3000 to 3000, 9: Range specified at ITEM 047 and 048)	0 to 4, 9	0	–	R/W(S)	–	–	–	1
	047*1		0% value for Y4 range	±32000	0	–	R/W(S)	–	–	–	2
	048*1		100% value for Y4 range	±32000	10000	–	R/W(S)	–	–	–	2
	049*1		Y5 input range conversion (0: 0 to 10000, 1: 0 to 4000, 2: –2000 to 2000, 3: 0 to 6000, 4: –3000 to 3000, 9: Range specified at ITEM 050 and 051)	0 to 4, 9	0	–	R/W(S)	–	–	–	1
	050*1		0% value for Y5 range	±32000	0	–	R/W(S)	–	–	–	2
	051*1		100% value for Y5 range	±32000	10000	–	R/W(S)	–	–	–	2
	052*1		Y6 input range conversion (0: 0 to 10000, 1: 0 to 4000, 2: –2000 to 2000, 3: 0 to 6000, 4: –3000 to 3000, 9: Range specified at ITEM 053 and 054)	0 to 4, 9	0	–	R/W(S)	–	–	–	1
	053*1		0% value for Y6 range	±32000	0	–	R/W(S)	–	–	–	2
	054*1		100% value for Y6 range	±32000	10000	–	R/W(S)	–	–	–	2
	055*1		Y7 input range conversion (0: 0 to 10000, 1: 0 to 4000, 2: –2000 to 2000, 3: 0 to 6000, 4: –3000 to 3000, 9: Range specified at ITEM 056 and 057)	0 to 4, 9	0	–	R/W(S)	–	–	–	1
	056*1		0% value for Y7 range	±32000	0	–	R/W(S)	–	–	–	2
	057*1		100% value for Y7 range	±32000	10000	–	R/W(S)	–	–	–	2
	058*1		Y8 input range conversion (0: 0 to 10000, 1: 0 to 4000, 2: –2000 to 2000, 3: 0 to 6000, 4: –3000 to 3000, 9: Range specified at ITEM 059 and 060)	0 to 4, 9	0	–	R/W(S)	–	–	–	1
	059*1		0% value for Y8 range	±32000	0	–	R/W(S)	–	–	–	2
	060*1		100% value for Y8 range	±32000	10000	–	R/W(S)	–	–	–	2

*1: Supported from version 2.50 of the Loop Control Unit.

Block Model	Block Name	Block Address
<454>	AO Terminal to CPU Unit	861 to 876

Outline

This function block outputs analog data to CPU Unit I/O memory.

•Types of CPU Unit I/O memory area from which data can be output
•CIO (channel I/O) Area: Data of any address can be input.
This area is mainly used for input of the following remote I/O data that is not supported on the Field Terminals:

Example
CompoBus/D Remote I/O, CompoBus/S Remote I/O, SYSBUS Remote I/O

•W: Work Area (W)
•H: Holding Area (H)
•D: Data Memory (D)
•E0: Extended Data Memory (E) (bank No. 0 only)

Analog data within the range 0.00 to 100.00% (actual data can be input with the range -320.00 to +320.00%) for X1 to X8 is converted to binary data (two's complement taken for minus numbers) according to the output range (specified by ITEM010 to ITEM012), and the resulting data is written to the number of words specified by ITEM009 from the leading word address of the I/O memory specified by ITEM008.

Example
To store 4000 (0FA0 Hex) at 100.00% and 0 (0000 Hex) to the CPU Unit, set 0%: 0 and 100%: 4000 as the output range.

•Either one range can be set for all points (X1 to X8) or a different range can be set for each point (supported from version 2.50 of the Loop Control Unit).

Note1: The "output range" described here does not refer to scaling defined by the user. Set the range of the data currently stored to the word data on the CPU Unit correctly based on the values to the stored to the specified words on the CPU Unit. In the above example, 01F4 Hex (decimal 500) is written to the CPU Unit by 100.00% when 0%: 0 and 100%: 500 are set as the input range instead of 0%: 0 and 100%: 4000.
Note2: Data that can be written to the CPU Unit is 4-digit Hex 8300 to FFFF and 0000 to 7D00.

Block diagram

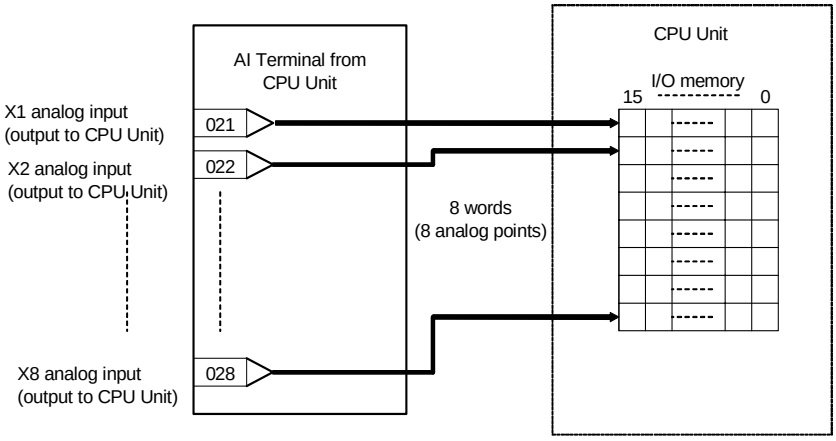

ITEM list

*1:On the CX-Process Monitor, the R/W mode is indicated in the Tuning screen or in the Control screen.

ITEM TYPE	ITEM	Symbol	Data Description	Data Range	Default	COLD start initialization	R/W Mode R: Read, W: Write, R/W: R/W-enabled, -: R/W-disabled Note: r and r/w: Read and read/write for validate action or monitor run status by CX-Process Tool or Monitor, (S): Initial setting data, (O): Operation data				Data Length (bytes)
							According to CX-Process Tool	According to CX-Process Monitor *1	According to ITEM Setting block	According to Step Ladder Program	
Contact input	000		Stop block operation command (0: Cancel stop, 1: Stop)	0, 1	0	–	–	–	–	–	1
Parameter	001		Comment	23 characters	Block name	–	R/W(S)	–	–	–	24
	002		Block Model: AO Terminal to CPU Unit	454	454	–	R/W(S)	–	–	–	2
Special	003		Execution error display 0: Normal, Other: Error (See Appendix "Execution Error Code List.")		0000	–	r	–	–	–	2
Parameter	004		Operation cycle (sec) 0: Common, 1: 0.1, 2: 0.2, 3: 0.5, 4: 1, 5: 2	0 to 5	0	–	R/W(S)	–	–	–	2
	007		CPU Unit I/O memory area type 0: CIO (Channel I/O) Area, 1: W (Work Area), 2: H (Holding Area), 3: D (Data Memory), 4: E0 (Extended Data Memory [E] bank No.)	0 to 4	3	–	R/W(S)	–	–	–	2
	008		Leading address	0 to 32767	32767	–	R/W(S)	–	–	–	2
	009		Number of words (= number of analog points)	1 to 8 (words)	8	–	R/W(S)	–	–	–	1
	010		Common or X1 output range conversion (0: 0 to 10000, 1: 0 to 4000, 2: –2000 to 2000, 3: 0 to 6000, 4: –3000 to 3000, 9: Range specified at ITEM011 and ITEM012) Note: ITEM 013 determines if this parameter is for all ranges or only the X1 input range.	0 to 4, 9	0	–	R/W(S)	–	–	–	1
	011		0% value for all ranges or X1 range (Specify which value is to be taken as 0% after signed binary conversion.)	±32000	0	–	R/W(S)	–	–	–	2
	012		100% value for all ranges or Y1 range (Specify which value is to be taken as 100% after signed binaryconversion.)	±32000	10000	–	R/W(S)	–	–	–	2
	013 *1		Range conversion method 0: Common setting for all ranges, 1:Individual setting for each range	0, 1	0	–	R/W (S)	–	–	–	1
Analog input connection information	021		X1 source designation BBB: Block address, III: ITEM No.	BBBIII	000000	–	R/W(S)	–	–	–	4
	to		to			–					
	028		X8 source designation BBB: Block address, III: ITEM No.	BBBIII	000000	–	R/W(S)	–	–	–	4
Analog input	031	X1	Analog input (output value to CPU Unit) 1	±320.00%	0.00	Yes	r	–	–	–	2
	to		to			Yes					
	038	X8	Analog input (output value to CPU Unit) 8	±320.00%	0.00	Yes	r	–	–	–	2
						–					

Individual range settings

*1:On the CX-Process Monitor, the R/W mode is indicated in the Tuning screen or in the Control screen.

ITEM TYPE	ITEM	Symbol	Data Description	Data Range	Default	COLD start initialization	R/W Mode R: Read, W: Write, R/W: R/W-enabled, -: R/W-disabled Note: r and r/w: Read and read/write for validate action or monitor run status by CX-Process Tool or Monitor, (S): Initial setting data, (O): Operation data				Data Length (bytes)
							According to CX-Process Tool	According to CX-Process Monitor *1	According to ITEM Setting block	According to Step Ladder Program	
	040*1		X2 output range conversion (0: 0 to 10000, 1: 0 to 4000, 2: –2000 to 2000, 3: 0 to 6000, 4: –3000 to 3000, 9: Range specified at ITEM 041 and 042)	0 to 4, 9	0	–	R/W(S)	–	–	–	1
	041*1		0% value for X2 range	±32000	0	–	R/W(S)	–	–	–	2
	042*1		100% value for X2 range	±32000	10000	–	R/W(S)	–	–	–	2
	043*1		X3 output range conversion (0: 0 to 10000, 1: 0 to 4000, 2: –2000 to 2000, 3: 0 to 6000, 4: –3000 to 3000, 9: Range specified at ITEM 044 and 045)	0 to 4, 9	0	–	R/W(S)	–	–	–	1
	044*1		0% value for X3 range	±32000	0	–	R/W(S)	–	–	–	2
	045*1		100% value for X3 range	±32000	10000	–	R/W(S)	–	–	–	2
	046*1		X4 output range conversion (0: 0 to 10000, 1: 0 to 4000, 2: –2000 to 2000, 3: 0 to 6000, 4: –3000 to 3000, 9: Range specified at ITEM 047 and 048)	0 to 4, 9	0	–	R/W(S)	–	–	–	1
	047*1		0% value for X4 range	±32000	0	–	R/W(S)	–	–	–	2
	048*1		100% value for X4 range	±32000	10000	–	R/W(S)	–	–	–	2
	049*1		X5 output range conversion (0: 0 to 10000, 1: 0 to 4000, 2: –2000 to 2000, 3: 0 to 6000, 4: –3000 to 3000, 9: Range specified at ITEM 050 and 051)	0 to 4, 9	0	–	R/W(S)	–	–	–	1
	050*1		0% value for X5 range	±32000	0	–	R/W(S)	–	–	–	2
	051*1		100% value for X5 range	±32000	10000	–	R/W(S)	–	–	–	2
	052*1		X6 output range conversion (0: 0 to 10000, 1: 0 to 4000, 2: –2000 to 2000, 3: 0 to 6000, 4: –3000 to 3000, 9: Range specified at ITEM 053 and 054)	0 to 4, 9	0	–	R/W(S)	–	–	–	1
	053*1		0% value for X6 range	±32000	0	–	R/W(S)	–	–	–	2
	054*1		100% value for X6 range	±32000	10000	–	R/W(S)	–	–	–	2
	055*1		X7 output range conversion (0: 0 to 10000, 1: 0 to 4000, 2: –2000 to 2000, 3: 0 to 6000, 4: –3000 to 3000, 9: Range specified at ITEM 056 and 057)	0 to 4, 9	0	–	R/W(S)	–	–	–	1
	056*1		0% value for X7 range	±32000	0	–	R/W(S)	–	–	–	2
	057*1		100% value for X7 range	±32000	10000	–	R/W(S)	–	–	–	2
	058*1		Y8 output range conversion (0: 0 to 10000, 1: 0 to 4000, 2: –2000 to 2000, 3: 0 to 6000, 4: –3000 to 3000, 9: Range specified at ITEM 059 and 060)	0 to 4, 9	0	–	R/W(S)	–	–	–	1
	059*1		0% value for X8 range	±32000	0	–	R/W(S)	–	–	–	2
	060*1		100% value for X8 range	±32000	10000	–	R/W(S)	–	–	–	2

*1: Supported from version 2.50 of the Loop Control Unit.

Block Model	Block Name	Block Address
<455>	Expanded DI Terminal from CPU Unit	829 to 860

Outline

This function block writes up to 64 contact data on the "contact input" ITEMs of another function block by inputting contact data in CPU Unit I/O Memory, and specifying those ITEMs as the destination.

•This function block differs from the DI Terminal from CPU Unit block (Block Model 451) in that writing can be performed on other function blocks directly from this function block without the need to use the Contact Distributor block (Block Model 201) and Step Ladder Program block (Block Model 301).
•When the previous value of the CPU Unit I/O Memory data is stored at each operation cycle and that data is updated, only the data that has been changed is written to ITEMs in other function blocks.
Note: When a cold start is performed, all of the data that is current at that time is written once unconditionally to ITEMs in other function blocks.

•All data including unchanged data is written constantly (at each operation cycle) to ITEMs in other function blocks for the duration that the S64 constant write switch is set to 1 (ON).
•In function block ITEM lists, contact data can be written to ITEMs defined as writeable (W) by ITEM Setting blocks. Contact data cannot be written to ITEMs defined as non-settable (-).

ITEM	R/W method				Data Length (bytes)
		According to CX-Process Monitor	According to ITEM Setting block	According to Step Ladder Program	
		W	—	W	1

• Types of CPU Unit I/O memory area to which data can be input.
•CIO (channel I/O) Area: Data of any address can be input
This area is mainly used for input of touch switch data from the PT (Programmable Terminal) or input of the following remote I/O data that is not supported on the Field Terminals:

Example
CompoBus/D Remote I/O, CompoBus/S Remote I/O, SYSBUS Remote I/O

•W: Work Area (W)
•H: Holding Area (H)
•D: Data Memory (D)
•E0: Extended Data Memory (E) bank No. 0 only

Block diagram

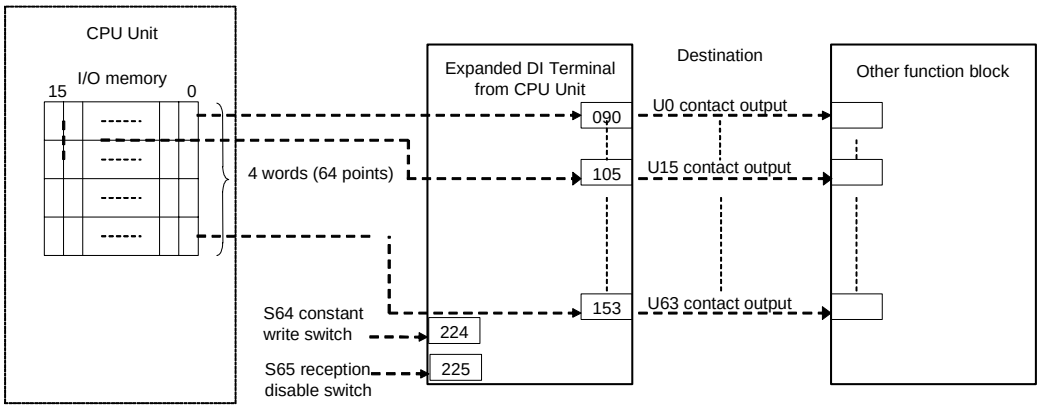

ITEM list

*1:On the CX-Process Monitor, the R/W mode is indicated in the Tuning screen or in the Control screen.

ITEM TYPE	ITEM	Symbol	Data Description	Data Range	Default	COLD start initialization	R/W Mode R: Read, W: Write, R/W: R/W-enabled, -: R/W-disabled Note: r and r/w: Read and read/write for validate action or monitor run status by CX-Process Tool or Monitor, (S): Initial setting data, (O): Operation data				Data Length (bytes)
							According to CX-Process Tool	According to CX-Process Monitor *1	According to ITEM Setting block	According to Step Ladder Program	
Contact input	000		Stop block operation command (0: Cancel stop, 1: Stop)	0, 1	0	–	–	–	–	–	1
Parameter	001		Comment	23 characters	Block name	–	R/W(S)	–	–	–	24
	002		Block Model: Expanded DI Terminal from CPU Unit	455	455	–	R/W(S)	–	–	–	2
Special	003		Execution error display 0: Normal, Other: Error (See Appendix "Execution Error Code List")		0000	–	r	–	–	–	2
Parameter	004		Operation cycle (sec) 0: Common, 1: 0.1, 2: 0.2, 3: 0.5, 4: 1, 5: 2	0 to 5	0	–	R/W(S)	–	–	–	2
Parameter	007		CPU Unit I/O memory area type 0: CIO (Channel I/O) Area, 1: W (Work Area), 2: H (Holding Area), 3: D (Data Memory), 4: E0 (Extended Data Memory [E] bank No.)	0 to 4	3	–	R/W(S)	–	–	–	1
	008		Leading address	0 to 32767	0	–	R/W(S)	–	–	–	2
	009		Number of words (n)umber of input contacts = number of words x 16 points	1 to 4 (words)	4	–	R/W(S)	–	–	–	1
Contact output connection information	090		U0 destination (BBB: Block No., III: ITEM No.)	BBBIII	000000	–	R/W(S)	–	–	–	4
	to		to			–					
	153		U63 destination (BBB: Block No., III: ITEM No.)	BBBIII	000000	–	R/W(S)	–	–	–	4
Contact output	160	U0	Contact output (input from CPU Unit, 1 word bit 00)	0, 1	0	Yes	–	–	–	R	1
	to		to			Yes					
	175	U15	Contact output (input from CPU Unit, 1 word bit 15)	0, 1	0	Yes	–	–	–	R	1
	176	U16	Contact output (input from CPU Unit, 2 words bit 00)	0, 1	0	Yes	–	–	–	R	1
	to		to			Yes					
	223	U63	Contact output (input from CPU Unit, 4 words bit 15)	0, 1	0	Yes	–	–	–	R	1
Contact input	224	S64	Constant write switch•••Write all inputs at each operation cycle when 1 (ON).	0, 1	0	–	R/W(O)	–	–	R/W	1
	225	S65*1	Reception disable switch 1 (ON): Inputs (reception) from the CPU Unit are disabled.	0, 1	0	Yes	R/W (O)	–	–	R/W	1

*1: Supported from version 2.50 of the Loop Control Unit.

Block Model	Block Name	Block Address
<456>	Expanded DO Terminal to CPU Unit	829 to 860

Outline

This function block inputs up to 64 contact data and writes that contact data to ITEMs in CPU Unit I/O Memory area by specifying "contact output" or "contact input" ITEMs in other function blocks.

•This function block differs from the DO Terminal to CPU Unit block (Block Model 452) in that "contact output" or "contact input" ITEMs in other function blocks can be specified directly as the source from this function block without the need to use the Contact Distributor block (Block Model 201) or Step Ladder Program block (Block Model 301).
•When the previous value of the contact data is stored at each operation cycle and that data is updated, all the data is written to the CPU Unit I/O Memory area.

Note: When a cold start is performed, all of the data that is current at that time is written once unconditionally to ITEMs in CPU Unit I/O Memory area.

•All data including unchanged data is written constantly (at each operation cycle) to ITEMs in other function blocks for the duration that the S64 constant write switch is set to 1 (ON).
•In function block ITEM lists, the ITEMs that can be designated as the source are ITEMs that are read/writable (R/W) or readable (R) by the Step Ladder Program. ITEMs defined as non-settable (-) cannot be designated as the source.

ITEM	R/W method				Data Length (bytes)
		According to CX-Process Monitor	According to ITEM Setting block	According to Step Ladder Program	
		W	—	R/W	1

•Types of CPU Unit I/O memory area from which data can be output
  •CIO (channel I/O) Area: Data of any address can be input.
  This area is mainly used for output to lamp parts, alarm log and screen switching on the PT (Programmable Terminal) or output of the following remote I/O data that is not supported on the Field Terminals:

  Example
  CompoBus/D Remote I/O, CompoBus/S Remote I/O, SYSBUS Remote I/O

  • W: Work Area (W)
  • H: Holding Area (H)
  • D: Data Memory (D)
  • E0: Extended Data Memory (E) bank No. 0 only

Block diagram

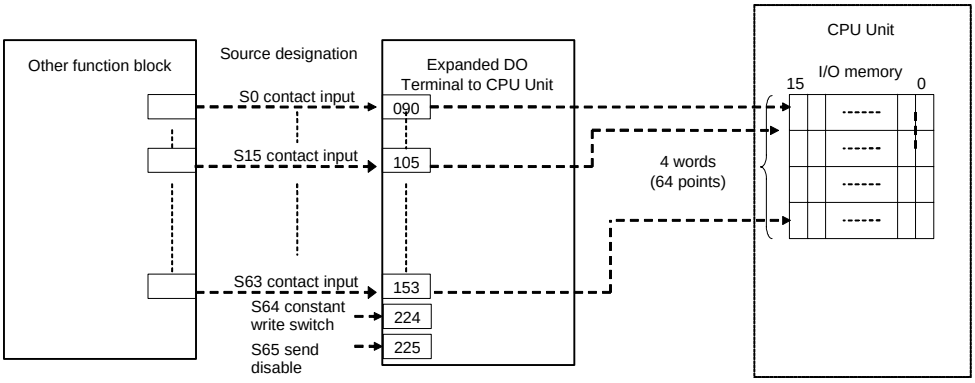

ITEM list

*1:On the CX-Process Monitor, the R/W mode is indicated in the Tuning screen or in the Control screen.

ITEM TYPE	ITEM	Symbol	Data Description	Data Range	Default	COLD start initialization	R/W Mode R: Read, W: Write, R/W: R/W-enabled, -: R/W-disabled Note: r and r/w: Read and read/write for validate action or monitor run status by CX-Process Tool or Monitor, (S): Initial setting data, (O): Operation data				Data Length (bytes)
							According to CX-Process Tool	According to CX-Process Monitor *1	According to ITEM Setting block	According to Step Ladder Program	
Contact input	000		Stop block operation command (0: Cancel stop, 1: Stop)	0, 1	0	–	–	–	–	–	1
Parameter	001		Comment	23 characters	Block name	–	R/W(S)	–	–	–	24
	002		Block Model: Expanded DO Terminal to CPU Unit	456	456	–	R/W(S)	–	–	–	2
Special	003		Execution error display 0: Normal, Other: Error (See Appendix "Execution Error Code List.")		0000	–	r	–	–	–	2
Parameter	004		Opeation cycle (s) 0: Common, 1: 0.1, 2: 0.2, 3: 0.5, 4: 1, 5: 2	0 to 5	0	–	R/W(S)	–	–	–	2
Parameter	007		CPU Unit I/O memory area type 0: CIO (Channel I/O) Area, 1: W (Work Area), 2: H (Holding Area), 3: D (Data Memory), 4: E0 (Extended Data Memory [E] bank No.)	0 to 4	3	–	R/W(S)	–	–	–	1
	008		Leading address	0 to 32767	32767	–	R/W(S)	–	–	–	2
	009		Number of words (number of output contacts = number of words x 16 points)	1 to 4 (words)	4	–	R/W(S)	–	–	–	1
Contact input connection information	090		SO source designation (BBB: Block No., III: ITEM No.)	BBBIII	000000	–	R/W(S)	–	–	–	4
	to		to			–					
	153		S63 source designation (BBB: Block No., III: ITEM No.)	BBBIII	000000	–	R/W(S)	–	–	–	4
Contact input	160	S0	Contact input (output value to CPU Unit, 1 word bit 00)	0, 1	0	Yes	–	–	–	R/W	1
	to		to			Yes					
	175	S15	Contact input (output value to CPU Unit, 1 word bit 15)	0, 1	0	Yes	–	–	–	R/W	1
	176	S16	Contact input (output value to CPU Unit, 2 words bit 00)	0, 1	0	Yes	–	–	–	R/W	1
	to		to			Yes					
	223	S63	Contact input (output value to CPU Unit, 4 words bit 15)	0, 1	0	Yes	–	–	–	R/W	1
Contact input	224	S64	Constant write switch•••Write all inputs at each operation cycle when 1 (ON).	0, 1	0	–	R/W(O)	–	–	R/W	1
	225	S65*1	Send disable switch 1 (ON): Output (sending) to the CPU Unit is disabled.	0, 1	0	Yes	R/W (O)	–	–	R/W	1

*1: Supported from version 2.50 of the Loop Control Unit.

Block Model	Block Name	Block Address
<457>	Expanded AI Terminal from CPU Unit	829 to 860

Outline

This function block writes up to 64 analog data on the ITEMs of another function block by inputting analog data in CPU Unit I/O Memory area, and specifying those ITEMs as the destination.

•This function block differs from the AI Terminal from CPU Unit block (Block Model 453) in that writing can be performed on other function blocks directly from this function block without the need to use the Variable ITEM Setting block (Block Model 172).
  •When the previous value of the CPU Unit I/O Memory data is stored at each operation cycle and that data is updated, only the data that has been changed is written to ITEMs in other function blocks.

Note: When a cold start is performed, all of the data that is current at that time is written once unconditionally to ITEMs in other function blocks.

•All data including unchanged data is written constantly (at each operation cycle) to ITEMs in other function blocks for the duration that the S64 constant write switch is set to 1 (ON).
•In function block ITEM lists, analog data can be written to ITEMs defined as writeable (W) by ITEM Setting blocks. Analog data cannot be written to ITEMs defined as non-settable (–).

ITEM	R/W method				Data Length (bytes)
		According to CX-Process Monitor	According to ITEM Setting block	According to Step Ladder Program	
		W	W	—	1

•Types of CPU Unit I/O memory area to which data can be input
  • CIO (channel I/O) Area: Data of any address can be input
    This area is mainly used for input of numerical setting data from the PT (Programmable Terminal) or input of the following remote I/O data that is not supported on the Field Terminals:

  Example
    CompoBus/D Remote I/O, CompoBus/S Remote I/O, SYSBUS Remote I/O

  • W: Work Area (W)
  • H: Holding Area (H)
  • D: Data Memory (D)
  • E0: Extended Data Memory (E) bank No. 0 only

Analog data for the number of words specified by ITEM009 from the leading word address of the I/O memory specified by ITEM008 are treated as signed binary data (two's complement taken for minus numbers) and converted to signed decimal. The range of the resulting values is converted to 0.00 to 100.00% according to the input range (specified by ITEM010 to ITEM073) to be read to Y1 to Y64. (Actual data can be output within the range -320.00 to +320.00%.)

Example

To read 100.00% when 4000 (decimal) is stored and read 0.00% when 0 (decimal) is stored on word data currently stored by 0000 to 0FA0 Hex (decimal 0 to 4000), set 0%: 0 and 100%: 4000 as the input range.

Note1: The "input range" described here does not refer to scaling defined by the user. Set the range of the data currently stored to the word data on the CPU Unit correctly based on the values to the stored to the specified words on the CPU Unit. In the above example, 100.00% is read to Y by 01F4 Hex (decimal 500) when 0%: 0 and 100%: 500 are set as the input range instead of 0%: 0 and 100%: 4000.

Note2: Data that can be read from the CPU Unit is 4-digit Hex 8300 to FFFF and 0000 to 7D00 (decimal -32000 to +32000).

Block diagram

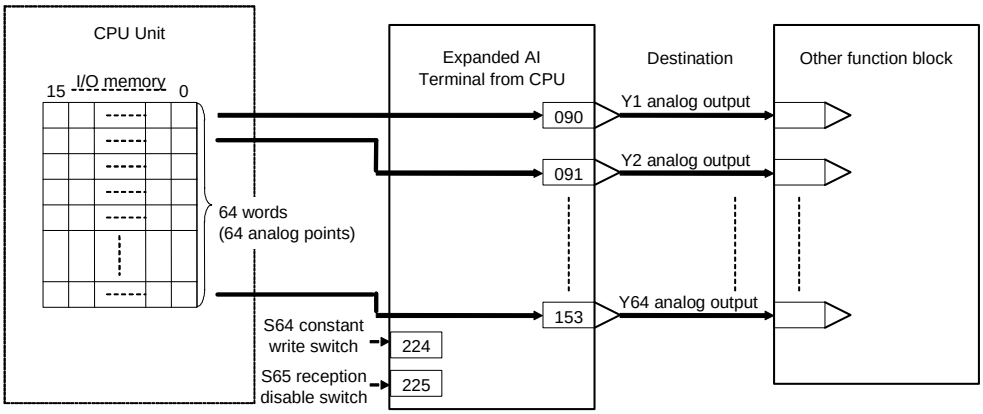

ITEM list

*1:On the CX-Process Monitor, the R/W mode is indicated in the Tuning screen or in the Control screen.

ITEM TYPE	ITEM	Symbol	Data Description	Data Range	Default	COLD start initialization	R/W Mode R: Read, W: Write, R/W: R/W-enabled, -: R/W-disabled Note: r and r/w: Read and read/write for validate action or monitor run status by CX-Process Tool or Monitor, (S): Initial setting data, (O): Operation data				Data Length (bytes)
							According to CX-Process Tool	According to CX-Process Monitor *1	According to ITEM Setting block	According to Step Ladder Program	
Contact input	000		Stop block operation command (0: Cancel stop, 1: Stop)	0, 1	0	–	–	–	–	–	1
Parameter	001		Comment	23 characters	Block name	–	R/W(S)	–	–	–	24
	002		Block Model: Expanded AI Terminal from CPU Unit	457	457	–	R/W(S)	–	–	–	2
Special	003		Execution error display 0: Normal, Other: Error (See Appendix "Execution Error Code List.")		0000	–	r	–	–	–	2
Parameter	004		Operation cycle (sec) 0: Common, 1: 0.1, 2: 0.2, 3: 0.5, 4: 1, 5: 2	0 to 5	0	–	R/W(S)	–	–	–	2
Parameter	007		CPU Unit I/O memory area type 0: CIO (Channel I/O) Area, 1: W (Work Area), 2: H (Holding Area), 3: D (Data Memory), 4: E0 (Extended Data Memory [E] bank No.)	0 to 4	3	–	R/W(S)	–	–	–	1
	008		Leading address	0 to 32767	0	–	R/W(S)	–	–	–	2
	009		Number of words (=number of analog points)	1 to 64 (words)	64	–	R/W(S)	–	–	–	1
	010		Y1 input range conversion (0: Not used, 1: 0 to 4000, 2: -2000 to +2000, 3: 0 to 6000, 4: -3000 to +3000, 11 to 18: Specified range (Specify in ITEM074 to ITEM089.))	0 to 4, 11 to 18	0	–	R/W(S)	–	–	–	1
	to		to			–					
	073		Y64 input range conversion (0: Not used, 1: 0 to 4000, 2: -2000 to +2000, 3: 0 to 6000, 4: -3000 to +3000, 11 to 18: Specified range (Specify in ITEM074 to ITEM089.))	0 to 4, 11 to 18	0	–	R/W(S)	–	–	–	1
	074		Range 0% (specified range: 11)	±32000	0	–	R/W(S)	–	–	–	2
	075		Range 100% (specified range: 11)	±32000	10000	–	R/W(S)	–	–	–	2
	to		to			–					
	088		Range 0% (specified range: 18)	±32000	0	–	R/W(S)	–	–	–	2
	089		Range 100% (specified range: 18)	±32000	10000	–	R/W(S)	–	–	–	2
Analog output connection information	090		Y1 destination (BBB: Block No., III: ITEM No.)	BBBIII	000000	–	R/W(S)	–	–	–	4
	to		to			–					
	153		Y64 destination (BBB: Block No., III: ITEM No.)	BBBIII	000000	–	R/W(S)	–	–	–	4
Analog output	160	Y1	Analog output (input from CPU Unit) 1	±320.00%	0.00	Yes	–	–	–	–	2
	to		to			Yes					
	223	Y64	Analog output (input from CPU Unit) 64	±320.00%	0.00	Yes	–	–	–	–	2
Contact input	224	S64	Constant write switch•••Writes all inputs at each operation cycle when 1 (ON).	0, 1	0	–	R/W(O)	–	–	R/W	1
	225	S65*1	Reception disable switch 1 (ON): Input (reception) from the CPU Unit disabled.	0, 1	0	Yes	R/W (O)	–	–	R/W	1

*1: Supported from version 2.50 of the Loop Control Unit.

Block Model	Block Name	Block Address
<458>	Expanded AO Terminal to CPU Unit	829 to 860

Outline

This function block inputs up to 64 analog data by specifying the ITEMs of another function block as the source and writes that data to CPU Unit I/O Memory area.

•This function block differs from the AO Terminal to CPU Unit block (Block Model 454) in that parameter ITEMs other than "analog input" and "analog output" ITEMs that can be written by ITEM Setting blocks can be specified as the source.

•When the previous value of the source analog data is stored at each operation cycle and that data is updated, all the data is written to CPU Unit I/O memory area.

Note: When a cold start is performed, all of the data that is current at that time is written once unconditionally to ITEMs in other function blocks.

•All data including unchanged data is written constantly (at each operation cycle) to ITEMs in other function blocks for the duration that the S64 constant write switch is set to 1 (ON).
"Analog input" and "analog output" ITEMs or ITEMs in function block ITEM lists defined as writeable (W) by ITEM Setting blocks as shown below can be specified as the source.

ITEM	R/W method				Data Length (bytes)
		According to CX-Process Monitor	According to ITEM Setting block	According to Step Ladder Program	
		W	W	—	1

•Types of CPU Unit I/O memory area from which data can be output

•CIO (channel I/O) Area: Data of any address can be input.
This area is mainly used for input of numerical setting data from the PT (Programmable Terminal) or input of the following remote I/O data that is not supported on the Field Terminals:

Example
CompoBus/D Remote I/O, CompoBus/S Remote I/O, SYSBUS Remote I/O

•W: Work Area (W)
•H: Holding Area (H)
•D: Data Memory (D)
•E0: Extended Data Memory (E) bank No. 0 only

Analog data within the range 0.00 to 100.00% (actual data can be input with the range -320.00 to +320.00%) for X1 to X64 is converted to binary data (two's complement taken for minus numbers) according to the output range (specified by ITEM010 to ITEM073), and the resulting data is written to the number of words specified by ITEM009 from the leading word address of the I/O memory specified by ITEM008.

Example
To store 4000 (0FA0 Hex) at 100.00% and 0 (0000 Hex) to the CPU Unit, set 0%: 0 and 100%: 4000 as the output range.

Note1: The "output range" described here does not refer to scaling defined by the user. Set the range of the data currently stored to the word data on the CPU Unit correctly based on the values to the stored to the specified words on the CPU Unit. In the above example, 01F4 Hex (decimal 500) is written to the CPU Unit by 100.00% when 0%: 0 and 100%: 500 are set as the input range instead of 0%: 0 and 100%: 4000.

Note2: Data that can be written to the CPU Unit is 4-digit Hex 8300 to FFFF and 0000 to 7D00 (decimal -32000 to +32000).

Block diagram

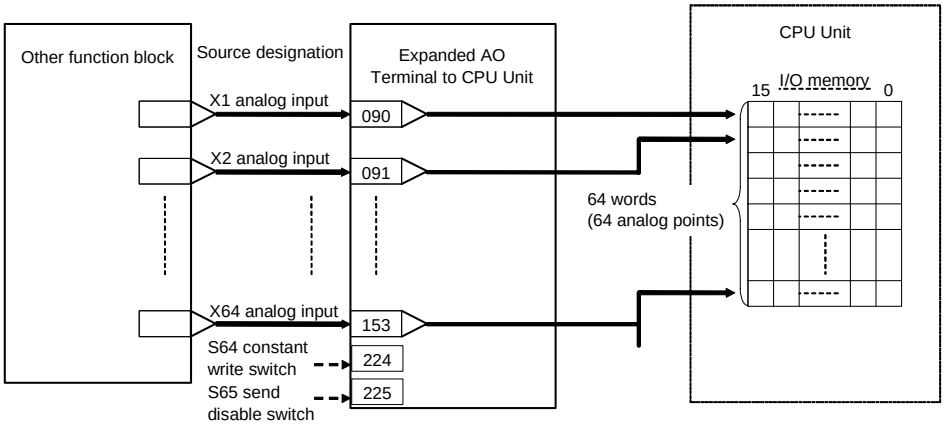

ITEM list

*1:On the CX-Process Monitor, the R/W mode is indicated in the Tuning screen or in the Control screen.

ITEM TYPE	ITEM	Symbol	Data Description	Data Range	Default	COLD start initialization	R/W Mode R: Read, W: Write, R/W: R/W-enabled, -: R/W-disabled Note: r and r/w: Read and read/write for validate action or monitor run status by CX-Process Tool or Monitor, (S): Initial setting data, (O): Operation data				Data Length (bytes)
							According to CX-Process Tool	According to CX-Process Monitor *1	According to ITEM Setting block	According to Step Ladder Program	
Contact input	000		Stop block operation command (0: Cancel stop, 1: Stop)	0, 1	0	–	–	–	–	–	1
Parameter	001		Comment	23 characters	Block name	–	R/W(S)	–	–	–	24
	002		Block Model: Expanded AO Terminal to CPU Unit	458	458	–	R/W(S)	–	–	–	2
Special	003		Execution error display 0: Normal, Other: Error (See Appendix "Execution Error Code List.")		0000	–	r	–	–	–	2
Parameter	004		Operation cycle (sec) 0: Common, 1: 0.1, 2: 0.2, 3: 0.5, 4: 1, 5: 2	0 to 5	0	–	R/W(S)	–	–	–	2
	007		CPU Unit I/O memory area type 0: CIO (Channel I/O) Area, 1: W (Work Area), 2: H (Holding Area), 3: D (Data Memory), 4: E0 (Extended Data Memory [E] bank No.)	0 to 4	3	–	R/W(S)	–	–	–	1
	008		Leading address	0 to 32767	32767	–	R/W(S)	–	–	–	2
	009		Number of words (=number of analog points)	1 to 64 (words)	64	–	R/W(S)	–	–	–	1
	010		X1 output range conversion (0: Not used, 1: 0 to 4000, 2: -2000 to +2000, 3: 0 to 6000, 4: -3000 to +3000, 11 to 18: Specified range (Specify in ITEM074 to ITEM089.))	0 to 4, 11 to 18	0	–	R/W(S)	–	–	–	1
	to		to			–					
	073		X64 output range conversion (0: Not used, 1: 0 to 4000, 2: -2000 to +2000, 3: 0 to 6000, 4: -3000 to +3000, 11 to 18: Specified range (Specify in ITEM074 to ITEM089.))	0 to 4, 11 to 18	0	–	R/W(S)	–	–	–	1
	074		Range 0% (specified range: 11)	±32000	0	–	R/W(S)	–	–	–	2
	075		Range 100% (specified range: 11)	±32000	10000	–	R/W(S)	–	–	–	2
	to		to			–					
	088		Range 0% (specified range: 18)	±32000	0	–	R/W(S)	–	–	–	2
	089		Range 100% (specified range: 18)	±32000	10000	–	R/W(S)	–	–	–	2
Analog input connection information	090		X1 source designation (BBB: Block No., III: ITEM No.)	BBBIII	000000	–	R/W(S)	–	–	–	4
	to		to			–					
	153		X64 source designation (BBB: Block No., III: ITEM No.)	BBBIII	000000	–	R/W(S)	–	–	–	4
Analog input	160	X1	Analog input (output to CPU Unit) 1	±320.00%	0.00	Yes	–	–	–	–	2
	to		to			Yes					
	223	X64	Analog input (output to CPU Unit) 64	±320.00%	0.00	Yes	–	–	–	–	2
Contact input	224	S64	Constant write switch Write all inputs at each operation cycle when 1 (ON).	0, 1	0	–	R/W(O)	–	–	R/W	1
	225	S65*1	Send disable switch Reception disable switch 1 (ON): Output (sending) to the CPU Unit disabled.	0, 1	0	Yes	R/W (O)	–	–	R/W	1

*1: Supported from version 2.50 of the Loop Control Unit.

Block Model	Block Name	Block Address
<461>	Receive All Blocks	897

Outline

This function block receives the data for all block send/receive ITEMs for the number of specified blocks from the specified I/O memory addresses in the CPU Unit. It can be used for Control Blocks, Operation Blocks, and External Controller Blocks.

Function Block for which Data Can Be Received

- Control Blocks: The specified number of Control Blocks starting from address 001 (32 blocks maximum).
- Operation Blocks: The specified number of Operation Blocks starting from address 100 (249 blocks maximum).
- External Controller Blocks: The specified number of External Controller Blocks starting from address 065 (32 blocks maximum).
  This function block is used to write data from the SCADA software to the Loop Control Unit.
  Note: From the SCADA software, CSV tags are specified to write data to I/O memory in the CPU Unit.

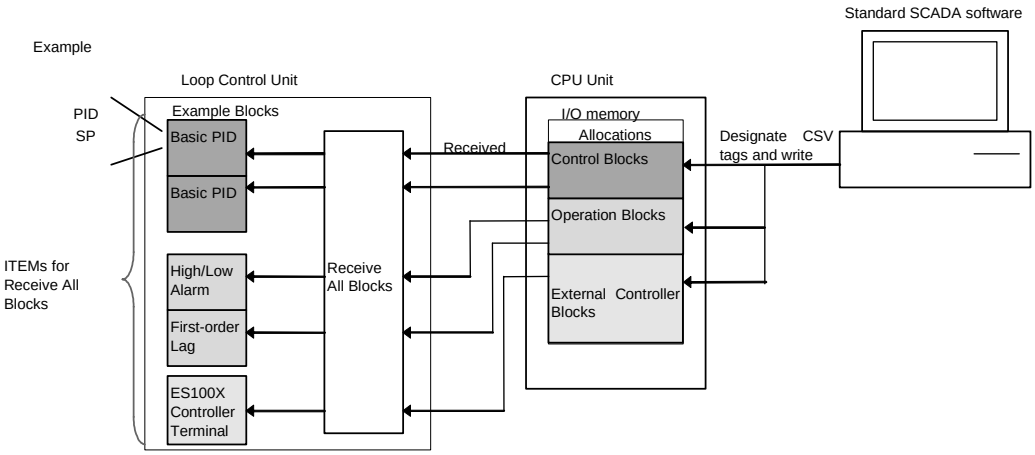

The ITEMs that can be sent/received for function blocks are determined in advance for each function block model. These are called, “receive block ITEMs.” The ITEMs listed as R (receive) or SR (send/receive) in the ITEM list for each function block will be allocated words in the I/O memory of the CPU Unit.

ITEMs that are received for Receive All Block are indicated in this column

ITEM Type	ITEM	Symbol	Data Description	Data Range	Default	R/W Mode R: Read, W: Write, R/W: R/W-enabled, -: R/W-disabled Note: r and r/w: Read and read/write for validate action or monitor run status by CX-Process Tool or Monitor. (S): Initial setting data, (O): Operation data					Data Length (bytes)
						According to CX-Process Tool	According to CX-Process Monitor*1	According to ITEM Setting Block	According to Stop Ladder Program	Send/ Receive All Blocks	
Contact input	000		Stop block operation command (0: Cancel stop, 1: Stop)	0, 1	0	–	R/W	–	–	R/S	1

Refer to Data Trasfers later in this section for details.

Note1: Use different words in I/O memory of the CPU Unit for Receive All Blocks (model 461) and Send All Blocks (model 462).
If the same words are used, the values in I/O memory written from the SCADA software will be overwritten by the Loop Control Unit. (In other words, the write processing from the SCADA software for Receive All Blocks will not be processed correctly.)

Example: If the SP ITEM value in the Basic PID Block is written to I/O Memory using Send All Blocks after data has been written from the SCADA software to the I/O memory in the CPU Unit but before the SP ITEM has been written using Receive All Block, the value written by the SCADA software wil be cleared from I/O memory.

Note2: When compiling CSV tags on the CX-Process Tool, always register both Send All Blocks (model 462) and Receive All Blocks (model 461). If one of each of these function blocks is not registers, the CSV tags will not be compiled correctly.

Function block applications

Use this function block to write ITEM data in the Loop Controller Unit function blocks from standard SCADA software.
The function block ITEM data in the I/O memory of the CPU is written from the SCADA software by designating the CSV tags created using the CX-Process Tool.

Block diagram

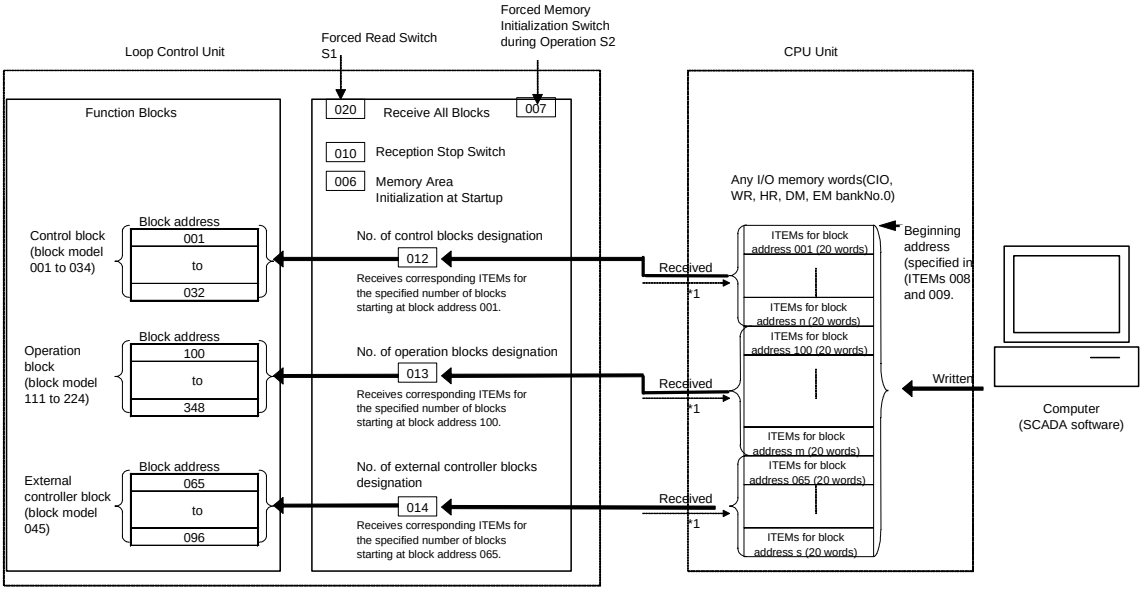

*1: When the memory area is initialized directly or periodically, ITEM data is used to initialize it.

Note: Normally, only values that have changed since the last reception are written from the specified I/O memory in the CPU Unit to the all block send/receive ITEMs in the Loop Control Unit.
However, if the Forced Read Switch (ITEM 020) is ON, the specified words in I/O memory in the CPU Unit is received by all block send/receive ITEMs in the Loop Control Unit.

If Memory Area Initialization at Startup (ITEM 006) is ON, data in the specified I/O memory words will be initialized with the ITEM data in the Loop Control Unit at startup.
If Memory Area Initialization at Startup (ITEM 006) is OFF, data in the specified I/O memory words will be transferred to the ITEM data in the Loop Control Unit at startup.
If the Memory Area Initialization Switch during Operation (ITEM 007) is turned ON, data in the specified I/O memory words will be initialized with the ITEM data in the Loop Control Unit.
If period initialization (ITEM 030) is 1 (ON), the specified words in I/O memory in the CPU Unit will be updated with the data in the Loop Control Unit at the initialization interval (ITEM 031). (Supported from version 2.50 of the Loop Control Unit.)
If Reception Stop Switch (ITEM 010) is ON, reception of data from the specified I/O memory words will be stopped in the Loop Control Unit.

ITEM list

*1:On the CX-Process Monitor, the R/W mode is indicated in the Tuning screen or in the Control screen.

ITEM TYPE	ITEM	Symbol	Data Description	Data Range	Default	COLD start initialization	R/W Mode R: Read, W: Write, R/W: R/W-enabled, -: R/W-disabled Note: r and r/w: Read and read/write for validate action or monitor run status by CX-Process Tool or Monitor, (S): Initial setting data, (O): Operation data					Data Length (bytes)
							According to CX-Process Tool	According to CX-Process Monitor *1	According to ITEM Setting block	According to Step Ladder Program	Send/Receive All Blocks	
Contact input	000		Stop block operation command 0: Cancel stop, 1: Stop	0, 1	0	–	–	–	–	–	–	1
Parameter	001		Comment	23 characters	Block name	–	R/W(S)	–	–	–	–	24
	002		Block Model: Receive All Blocks	461	461	–	R/W(S)	–	–	–	–	2
Special	003		Execution error display 0: Normal, Other: error (See Appendix “Execution Error Code List.”)		0000	–	r	–	–	–	–	2
Parameter	004		Operation cycle (seconds) 0: Common, 1: 01, 2: 0.2, 3: 0.5, 4: 1, 5: 2	0 to 5	4	–	R/W(S)	–	–	–	–	2
	006		Memory area initialization at startup 0: No, 1: Yes	0, 1	0	–	R/W(S)	–	–	–	–	1
Contact input parameter	007	S2	Forced memory area initialization SW during operation 0 to 1: Execute. Reset to 0 on completion.	0, 1	0	Yes	R/W(O)	–	–	R/W	–	1
Parameter	008		CPU Unit I/O memory area 0: CIO Area, 1: Work Area, 2: Holding Area, 3: DM Area, 4: EM Area bank 0	0 to 4	3	–	R/W(S)	–	–	–	–	1
	009		Beginning address	0 to 32767	32767	–	R/W(S)	–	–	–	–	2
Contact input	010	S3	Reception stop switch 1: Stop	0, 1	0	Yes	R/W(O)	–	–	R/W	–	1
Parameter	012		Number of Control Blocks	0 to 32	32	–	R/W(S)	–	–	–	–	2
	013		Number of Operation Blocks	0 to 249	0	–	R/W(S)	–	–	–	–	2
	014		Number of External Controller Blocks	0 to 32	0	–	R/W(S)	–	–	–	–	2
Contact input	020	S1	Forced read switch 0: Read only when different from previous time, 1: Always read	0, 1	0	–	R/W(O)	–	–	R/W	–	1
Parameter	030*1		Periodic initialization 0: No, 1: Yes (Memory will be periodically initialized if this parameter is set to 1 and the operation cycle is 1 sec or less. If the operation cycle is 2 sec, memory will be initialized at an interval twice the initialization interval in ITEM 031.)	0, 1	0	–	R/W(S)	–	–	–	–	1
	031*1		Initialization interval (unit: sec) (Valid when ITEM 030 is set to 1. If the operation cycle is 2 sec, twice the value of the initialization interval setting will be used.)	4 to 10 sec	4	–	R/W(S)	–	–	–	–	2

*1: If ITEM 030 (periodic initialization) is set to 1 (Yes), set ITEM 012, ITEM 013, and ITEM 014 so that the total number of blocks is 198 or more. I/O memory in the CPU Unit will be allocated for 198 blocks or more. All zeros will be written to allocated I/O memory words for block addresses that are not registered.
ITEM 030 and ITEM 031 are supported from version 2.50 of the Loop Control Unit.

Application Precautions for Receive All Blocks (Block Model 461)

If (1) Receive All Blocks (Block Model 461) is used to change function block ITEM data to the contents of specified I/O memory words (A) in the CPU Unit and then (2) ITEM data is changed to other values (B) without using Receive All Blocks (Block Model 461), ITEM data will not return to the values in the specified I/O memory words (A) even if specified for Receive All Blocks (Block Model 461), and data values (B) will remain.

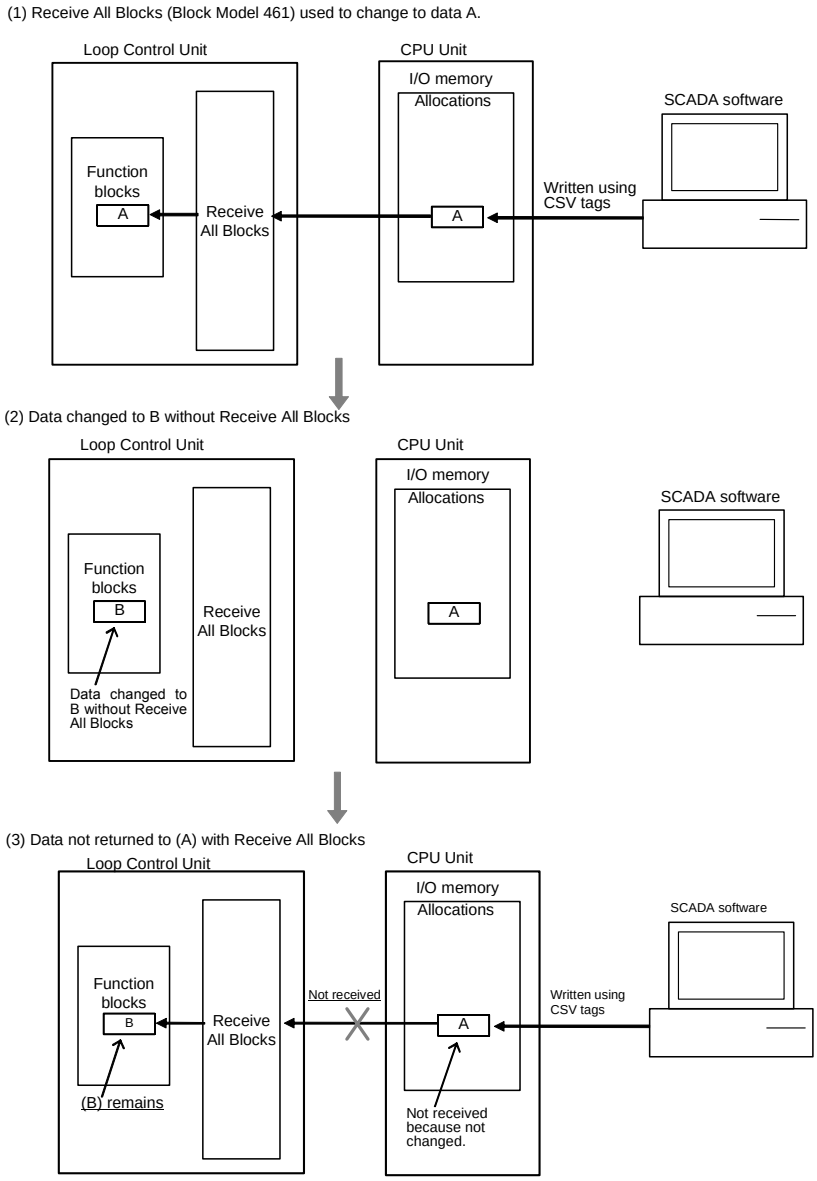

Example: If SCADA software is used to send Receive All Blocks to set the MV for a Basic PID block to 0.00% in manual mode and then the MV is changed in auto mode, the MV will not return to 0.00% even if 0.00% is then specified in manual mode.

This problem occurs because specified I/O memory data is received from the CPU Unit only when the content differs from the last time it was received.

This problem can be solved by setting ITEM 030 (periodic initialization) to 1 (Yes). (Supported from version 2.50 of the Loop Control Unit.)
If ITEM 030 is set to 1, the function block ITEM data will be periodically transferred to the CPU Unit. When this occurs, any data changed in the Loop Control Unit (B) will be written to the CPU Unit so that the next time Receive All Blocks is used, the data in the CPU Unit (B) will be different from the previous time (A) and the same data (A) can be transferred to the Loop Control Unit again.

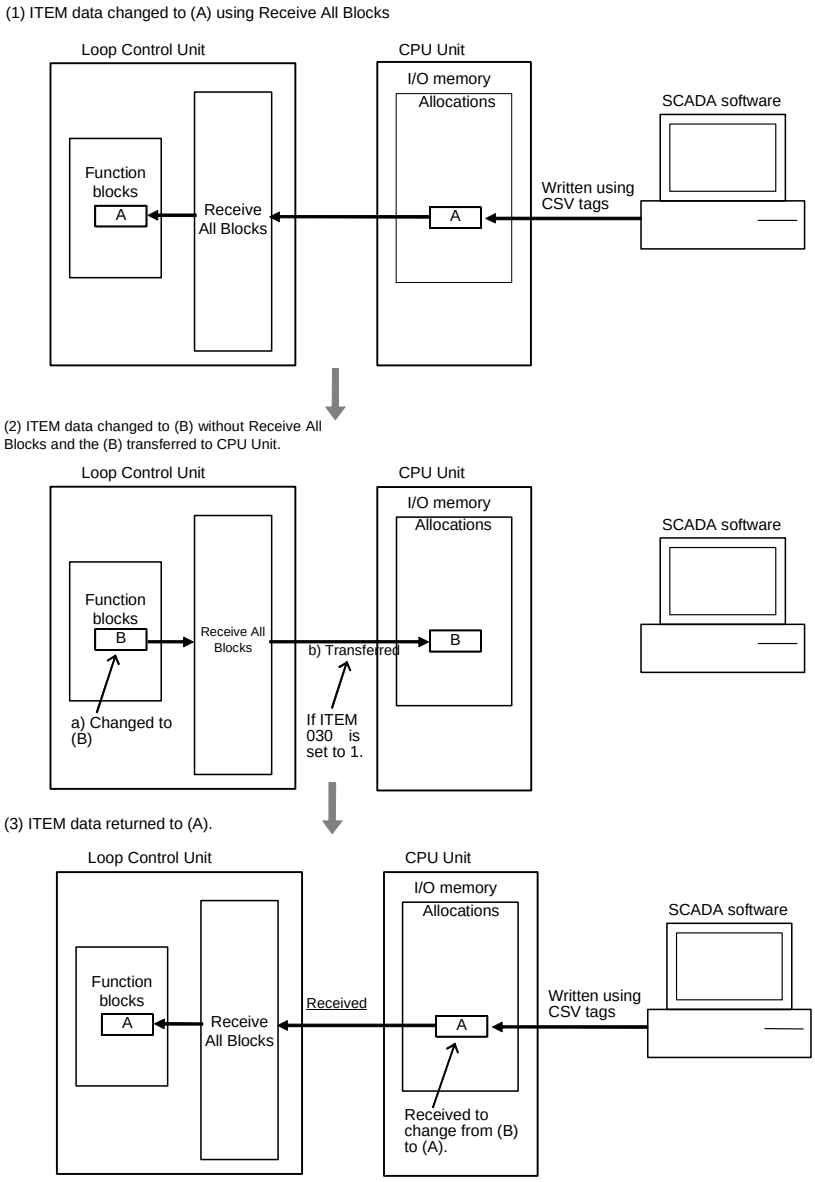

When ITEM 030 (periodic initialization) is set to 1 (Yes), however, there may be competition between Receive All Blocks transfers from the CPU Unit and periodic initialization from the Loop Control Unit. Transfers from the CPU Unit for Receive All Blocks are disabled when competition occurs.
To avoid this problem, the total number of blocks for Receive All Blocks (total of ITEM012, ITEM013, and ITEM014) should be set to 198 or greater.

Note1: If 198 blocks are set, 3, 961 words (198 x 20 words + 1) of I/O memory in the CPU Unit will be allocated. (There is no problem if the number of blocks for Receive All Blocks is higher than the number actually being used. All zeros will be written at any block addresses not being used. In this case, the probability that writing to the function blocks will be disabled is the CPU Unit cycle time divided by ITEM 031 (initialization interval) times 100% for all writes (0.25% if the CPU Unit cycle time is 10 ms and ITEM 031 is set to 4).
If ITEM 012, ITEM 013, and ITEM 014 are set so that the total number of blocks is less than 198, the probability that writing to the function blocks will be disabled is the operation cycle for Receive All Blocks divided by ITEM 031 (initialization interval) times 100% for all writes (25% if ITEM 004 is set to 4 (1 sec) and ITEM 031 is set to 4).

Note2: If Receive All Blocks (Block Model 461) is used to download individual function blocks from the CX-Process Tool during Loop Control Unit operation, turn ON ITEM 007 (Forced Memory Initialization Switch during Operation) after the download so that the ITEM data in the function blocks in CPU Unit I/O memory is also updated.

Sending/Receiving Data

The following information is the same for both Send All Blocks (model 462) and Receive All Blocks (model 461).

ITEM data (20 words/block) for function items is allocated from the beginning I/O memory word in the following order: Control Blocks, Operation Blocks, and External Controller Blocks.

- Control blocks: The number of control blocks (ITEM 012) starting from block addresses 001.
  Example:
  If ITEM 012 is 5, the function block data from block address 001 to 005 will be sent or received.
- Operation blocks: The number of operation blocks (ITEM 013) starting from block addresses 001.
  Example:
  If ITEM 013 is 8, the function block data from block address 100 to 107 will be sent or received.
- External Controller Terminal blocks: The number of External Controller Terminal blocks (ITEM 014) starting from block addresses 001.
  Example:
  If ITEM 014 is 5, the function block data from block address 065 to 069 will be sent or received.
- One word for data management (supported from version 2.50 of the Loop Control Unit.

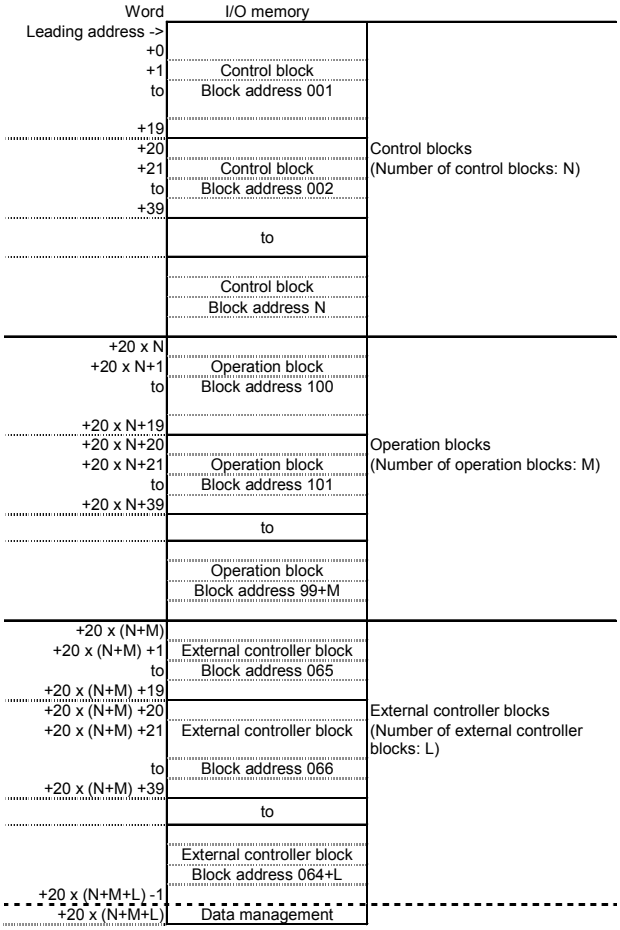

Note: Space for unused block addresses will not be eliminated and block addresses will always be consecutive for the number of blocks specified.

Example for the following: Beginning address: D01000(ITEM 008: 3, ITEM 009: 1000), Number of control blocks: 3(ITEM 012: 3), Number of operation blocks: 2(ITEM 013: 2)

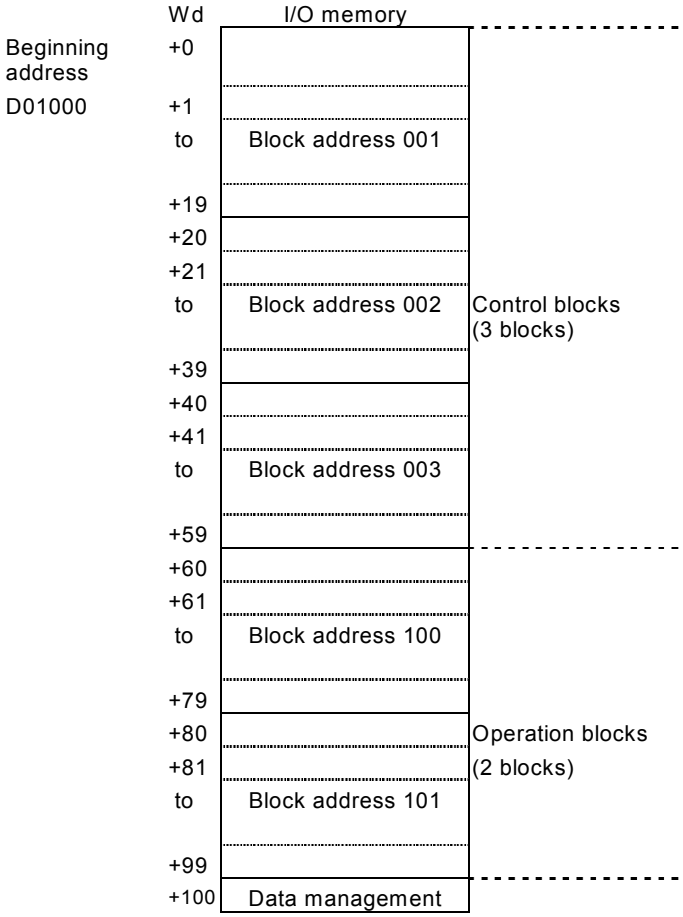

Note: A total of 20 words is allocated to each function block as shown below. The first 18 words (through the +17 words) are allocated to analog data. The words +18 and +19 from the beginning words are allocated as bit data.

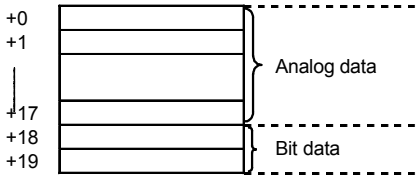

The ITEMs received for each function block model are predetermined as Receive Block ITEMs.

Example: Basic PID (Block Model 011) ITEMs

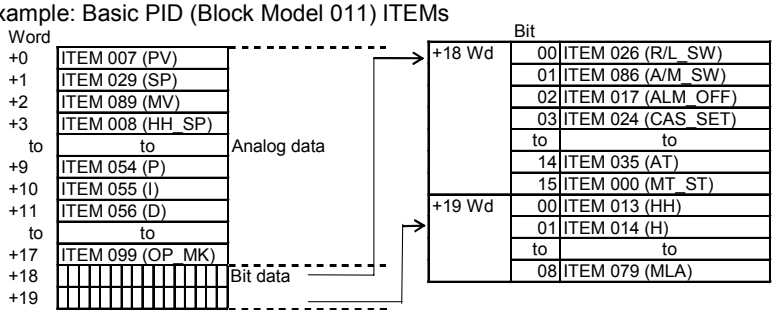

Block Model	Block Name	Block Address
<462>	Send All Blocks	898

Outline

This function block sends the data for all block send/receive ITEMs for the number of specified blocks to the specified I/O memory addresses in the CPU Unit. Control Blocks, Operation Blocks, and External Controller Blocks can be used.

Function Block for which Data Can Be Sent

•Control Blocks: The specified number of Control Blocks starting from address 001 (32 blocks maximum).
•Operation Blocks: The specified number of Operation Blocks starting from address 100 (249 blocks maximum, except internal switches).
•External Controller Blocks: The specified number of External Controller Blocks starting from address 065 (32 blocks maximum).

This function block is used to read data from the Loop Control Unit to SCADA software.

Note: From the SCADA software, CSV tags are specified to read data from I/O memory in the CPU Unit.

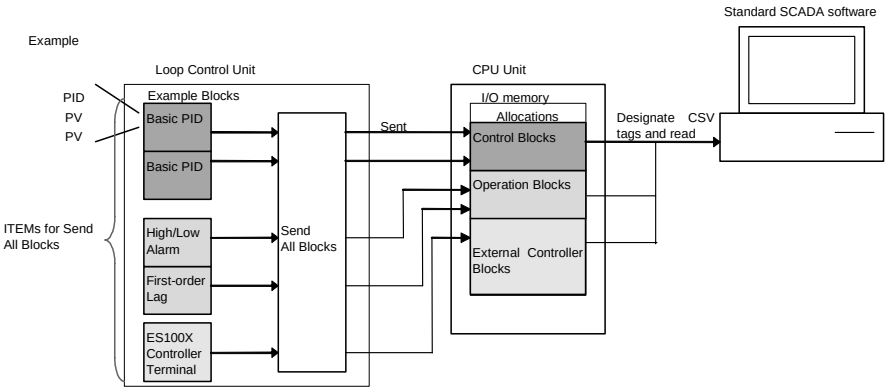

The ITEMs that can be sent/received for function blocks are determined in advance for each function block model. These are called, “send block ITEMs.” The ITEMS listed as S (send) or SR (send/receive), in the ITEM list for each function block are allocated words in the I/O memory of the CPU Unit.

ITEMs that are sent for Send All Block are indicated in this column

ITEM Type	ITEM	Symbol	Data Description	Data Range	Default	R/W Mode R: Read, W: Write, R/W: R/W-enabled, -: R/W-disabled Note: r and r/w: Read and read/write for validate action or monitor run status by CX-Process Tool or Monitor. (S): Initial setting data, (O): Operation data					Data Length (bytes)
						According to CX-Process Tool	According to CX-Process Monitor*1	According to ITEM Setting Block	According to Stop Ladder Program*1	Send/ Receive All Blocks	
Contact input	000		Stop block operation command (0: Cancel stop, 1: Stop)	0, 1	0	–	R/W	–	–	R/S	1

Refer to Data Transfers under Receive All Blocks for details.

Note1: Use different words in I/O memory of the CPU Unit for Receive All Blocks (model 461) and Send All Blocks (model 462). (The write processing from the SCADA software for Receive All Blocks will not be processed correctly. The read processing from the SCADA software for Send All Blocks, however, will be processed correctly.)

Note2: When compiling CSV tags on the CX-Process Tool, always register both Send All Blocks (model 462) and Receive All Blocks (model 461). If one of each of these function blocks is not registers, the CSV tags will not be compiled correctly.

Function block applications

Use this function block to read ITEM data in the Loop Controller Unit function blocks to standard SCADA software.
The function block ITEM data allocated in the I/O memory of the CPU is read to the SCADA software by designating the CSV tags created using the CX-Process Tool.

Block diagram

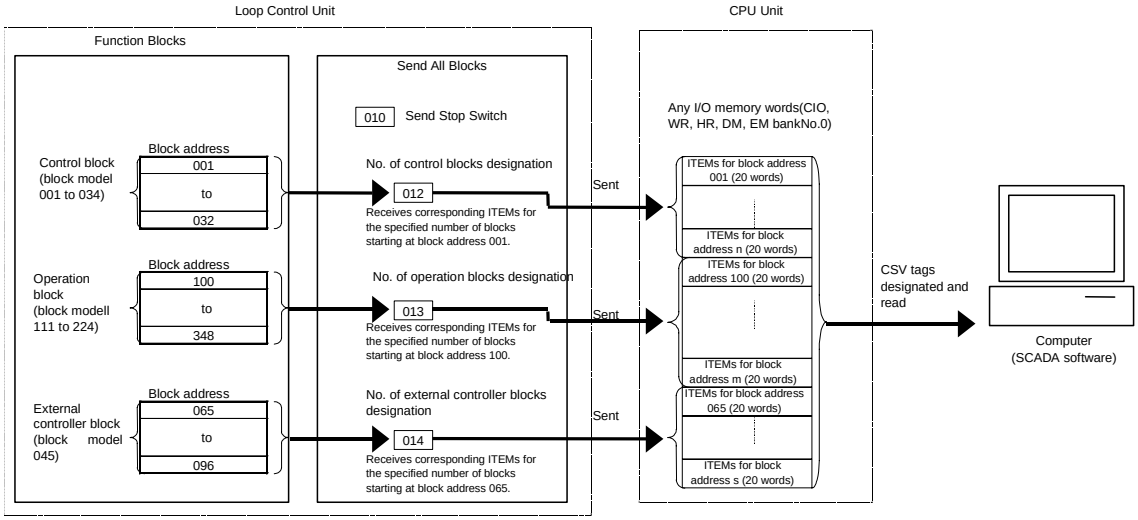

ITEM list

*1:On the CX-Process Monitor, the R/W mode is indicated in the Tuning screen or in the Control screen.

ITEM TYPE	ITEM	Symbol	Data Description	Data Range	Default	COLD start initialization	R/W Mode R: Read, W: Write, R/W: R/W-enabled, -: R/W-disabled Note: r and r/w: Read and read/write for validate action or monitor run status by CX-Process Tool or Monitor, (S): Initial setting data, (O): Operation data					Data Length (bytes)
							According to CX-Process Tool	According to CX-Process Monitor *1	According to ITEM Setting block	According to Step Ladder Program	Send/Receive All Blocks	
Contact input	000		Stop block operation command 0: Cancel stop, 1: Stop	0, 1	0	–	–	–	–	–	–	1
Parameter	001		Comment	23 characters	Block name	–	R/W(S)	–	–	–	–	24
	002		Block Model: Send All Blocks	462	462	–	R/W(S)	–	–	–	–	2
Special	003		Execution error display 0: Normal, Other: error (See Appendix “Execution Error Code List.”)		0000	–	r	–	–	–	–	2
Parameter	004		Operation cycle (seconds) 0: Common, 1: 01, 2: 0.2, 3: 0.5, 4: 1, 5: 2	0 to 5	4	–	R/W(S)	–	–	–	–	2
	008		CPU Unit I/O memory area 0: CIO Area, 1: Work Area, 2: Holding Area, 3: DM Area, 4: EM Area bank 0	0 to 4	3	–	R/W(S)	–	–	–	–	1
	009		Beginning address	0 to 32767	32767	–	R/W(S)	–	–	–	–	2
Contact input	010		Send stop switch 1: Send stop , 0: Send	0, 1	0	Yes	R/W(O)	–	–	R/W	–	1
Parameter	012		Number of Control Blocks	0 to 32	32	–	R/W(S)	–	–	–	–	2
	013		Number of Operation Blocks	0 to 249	0	–	R/W(S)	–	–	–	–	2
	014		Number of External Controller Blocks	0 to 32	0	–	R/W(S)	–	–	–	–	2

Note: If Send Stop Switch (ITEM 010) is ON, sending data in the Loop Control Unit to the specified I/O memory words in the CPU Unit will be stopped.

Block Model	Block Name	Block Address
<501>	DI 8-point Terminal	901 to 980

Outline

This function block is the Field Terminal block for inputting eight contacts from 8-point Input Units (C200H-I□□□□).

Note: The word number to be assigned for analog/input to CIO (channel I/O) Area on the CPU Unit must be set to ITEM007 (CIO word No.).

Block diagram

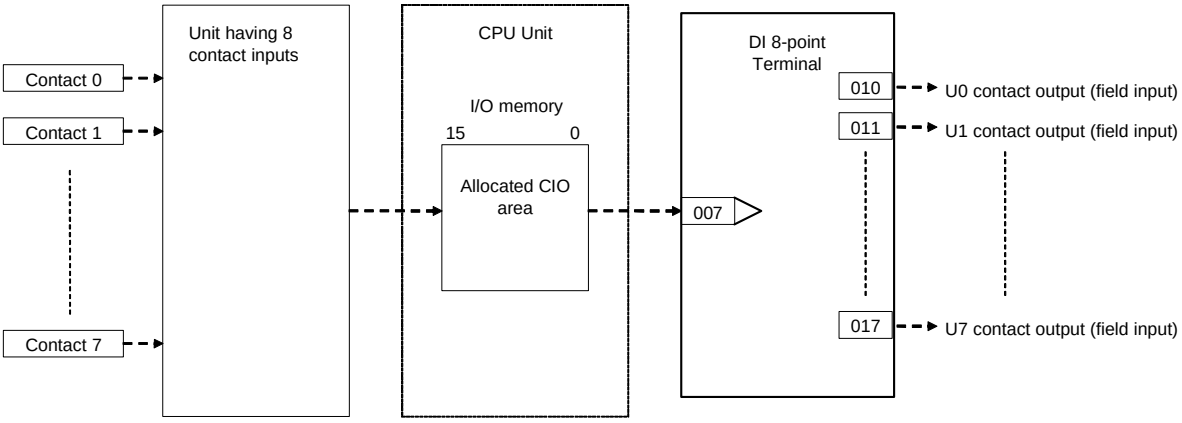

ITEM list

*1:On the CX-Process Monitor, the R/W mode is indicated in the Tuning screen or in the Control screen.

ITEM TYPE	ITEM	Symbol	Data Description	Data Range	Default	COLD start initialization	R/W Mode R: Read, W: Write, R/W: R/W-enabled, -: R/W-disabled Note: r and r/w: Read and read/write for validate action or monitor run status by CX-Process Tool or Monitor, (S): Initial setting data, (O): Operation data				Data Length (bytes)
							According to CX-Process Tool	According to CX-Process Monitor *1	According to ITEM Setting block	According to Step Ladder Program	
Contact input	000		Stop block operation command (0: Cancel stop, 1: Stop)	0, 1	0	–	–	–	–	–	1
Parameter	001		Comment	23 characters	Block name	–	R/W(S)	–	–	–	24
	002		Block Model: DI 8-point Terminal	501	501	–	R/W(S)	–	–		2
Special	003		Execution error display 0: Normal, Other: Error (See Appendix "Execution Error Code List.")		0000	–	r	–	–		2
Parameter	004		Operation cycle (sec) 0: Common, 1: 0.1, 2: 0.2, 3: 0.5, 4: 1, 5: 2	0 to 5	0	–	R/W(S)	–	–		2
	007		CIO word No. (Enter leading word No. allocated to I/O.)	0 to 32767	32767	–	R/W(S)	–	–		2
Contact output	010	U0	Contact output (field contact input)	0, 1	0	Yes	–	–	–	R	1
	to		to			Yes					
	017	U7	Contact output (field contact input)	0, 1	0	Yes	–	–	–	R	1

Block Model	Block Name	Block Address
<502>	DI 16-point Terminal	901 to 980

Outline

This function block is the Field Terminal block for inputting 16 contacts from 16-point Input Units (C200H-I□□□□, CS1W-I□□1□, CS1W-INT01, or CS1W-IDP01).

Note: The word number to be assigned for analog/input to CIO (channel I/O) Area on the CPU Unit must be set to ITEM 007 (CIO word No.).

Block diagram

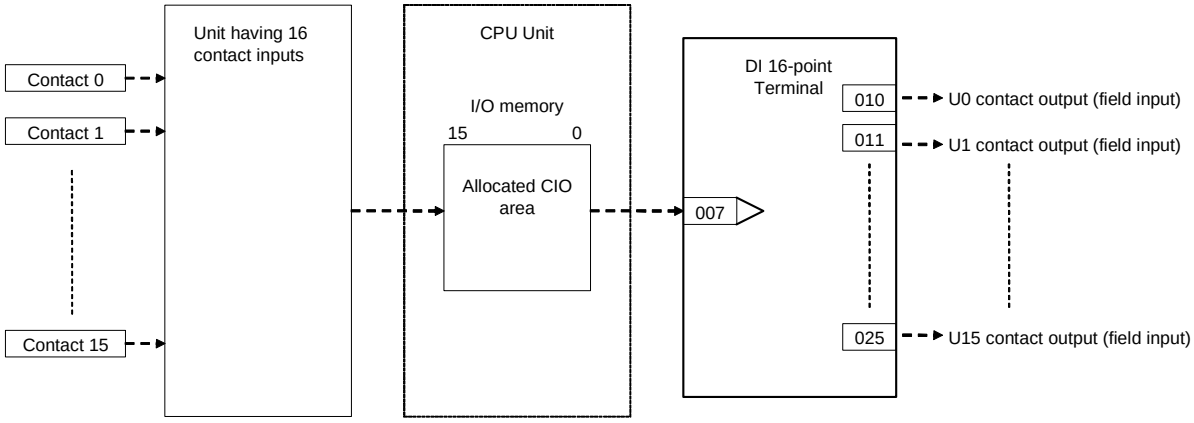

ITEM list

*1:On the CX-Process Monitor, the R/W mode is indicated in the Tuning screen or in the Control screen.

ITEM TYPE	ITEM	Symbol	Data Description	Data Range	Default	COLD start initialization	R/W Mode R: Read, W: Write, R/W: R/W-enabled, -: R/W-disabled Note: r and r/w: Read and read/write for validate action or monitor run status by CX-Process Tool or Monitor, (S): Initial setting data, (O): Operation data				Data Length (bytes)
							According to CX-Process Tool	According to CX-Process Monitor *1	According to ITEM Setting block	According to Step Ladder Program	
Contact input	000		Stop block operation command (0: Cancel stop, 1: Stop)	0, 1	0	–	–	–	–	–	1
Parameter	001		Comment	23 characters	Block name	–	R/W(S)	–	–	–	24
	002		Block Model: DI 16-point Terminal	502	502	–	R/W(S)	–	–	–	2
Special	003		Execution error display 0: Normal, Other: Error (See Appendix "Execution Error Code List.")		0000	–	r	–	–	–	2
Parameter	004		Operation cycle (sec) 0: Common, 1: 0.1, 2: 0.2, 3: 0.5, 4: 1, 5: 2	0 to 5	0	–	R/W(S)	–	–	–	2
Parameter	007		CIO word No. (Enter leading word No. allocated to I/O.)	0 to 32767	32767	–	R/W(S)	–	–	–	2
Contact output (field contact input)	010	U0	Contact output (field contact input)	0, 1	0	Yes	–	–	–	R	1
	to		to			Yes					
	025	U15	Contact output (field contact input)	0, 1	0	Yes	–	–	–	R	1

Block Model	Block Name	Block Address
<503>	DI 32-point Terminal	901 to 980

Outline

This function block is the Field Terminal block for inputting 32 contacts from 32-point Input Units (C200H-ID216, CS1W-ID231, or Special I/O Unit C200H-ID215).

Note: The word number to be assigned for analog/input to CIO (channel I/O) Area on the CPU Unit (in the case of the Special I/O Unit, the leading word number allocated to Special I/O Unit relay area) must be set to ITEM007 (CIO word No.).

Block diagram

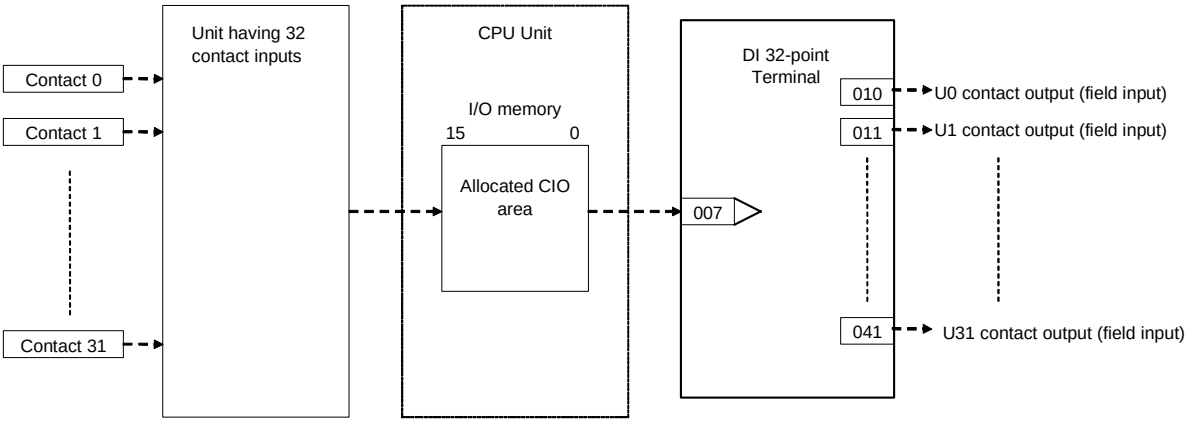

ITEM list

*1:On the CX-Process Monitor, the R/W mode is indicated in the Tuning screen or in the Control screen.

ITEM TYPE	ITEM	Symbol	Data Description	Data Range	Default	COLD start initialization	R/W Mode R: Read, W: Write, R/W: R/W-enabled, -: R/W-disabled Note: r and r/w: Read and read/write for validate action or monitor run status by CX-Process Tool or Monitor, (S): Initial setting data, (O): Operation data				Data Length (bytes)
							According to CX-Process Tool	According to CX-Process Monitor *1	According to ITEM Setting block	According to Step Ladder Program	
Contact input	000		Stop block operation command (0: Cancel stop, 1: Stop)	0, 1	0	–	–	–	–	–	1
Parameter	001		Comment	23 characters	Block name	–	R/W(S)	–	–	–	24
	002		Block Model: DI 32-point Terminal	503	503	–	R/W(S)	–	–	–	2
Special	003		Execution error display 0: Normal, Other: Error (See Appendix "Execution Error Code List.")		0000	–	r	–	–	–	2
Parameter	004		Operation cycle (sec) 0: Common, 1: 0.1, 2: 0.2, 3: 0.5, 4: 1, 5: 2	0 to 5	0	–	R/W(S)	–	–	–	2
	007		CIO word No. (Enter leading word No. allocated to I/O.)	0 to 32767	32767	–	R/W(S)	–	–	–	2
Contact output (field contact input)	010	U0	Contact output (field contact input)	0, 1	0	Yes	–	–	–	R	1
	to		to			Yes					
	025	U15	Contact output (field contact input)	0, 1	0	Yes	–	–	–	R	1
	026	U16	Contact output (field contact input)	0, 1	0	Yes	–	–	–	R	1
	to		to			Yes					
	041	U31	Contact output (field contact input)	0, 1	0	Yes	–	–	–	R	1

Block Model	Block Name	Block Address
<504>	DI 64-point Terminal	901 to 980

Outline

This function block is the Field Terminal block for inputting 64 contacts from 64-point Input Units (C200H-ID□□□ or CS1W-ID261).

•The setting value set on the unit number setting switch on the front of the I/O Unit is not related to this function block. The CIO (channel I/O) Area is set according to the same rules as the Basic I/O Unit.

Note: The word number to be assigned for analog/input to CIO (channel I/O) Area on the CPU Unit (in the case of the Special I/O Unit, the leading word number allocated to Special I/O Unit relay area) must be set to ITEM007 (CIO word No.).

Block diagram

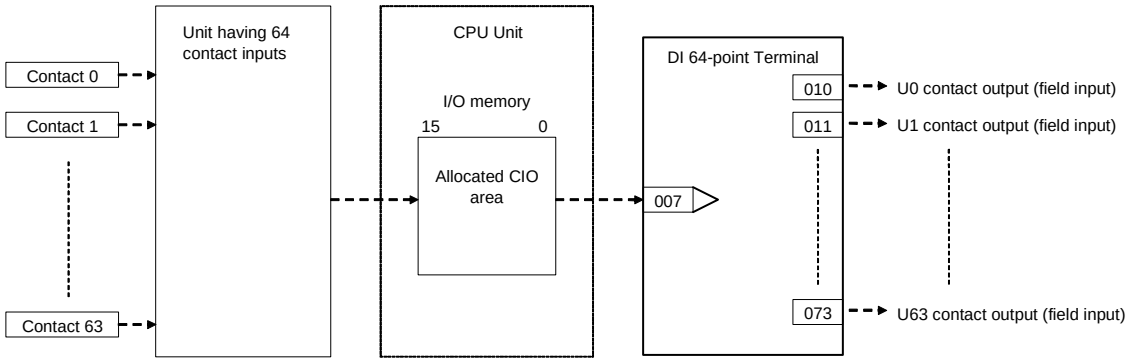

ITEM list

*1:On the CX-Process Monitor, the R/W mode is indicated in the Tuning screen or in the Control screen.

ITEM TYPE	ITEM	Symbol	Data Description	Data Range	Default	COLD start initialization	R/W Mode R: Read, W: Write, R/W: R/W-enabled, -: R/W-disabled Note: r and r/w: Read and read/write for validate action or monitor run status by CX-Process Tool or Monitor, (S): Initial setting data, (O): Operation data				Data Length (bytes)
							According to CX-Process Tool	According to CX-Process Monitor *1	According to ITEM Setting block	According to Step Ladder Program	
Contact input	000		Stop block operation command (0: Cancel stop, 1: Stop)	0, 1	0	–	–	–	–	–	1
Parameter	001		Comment	23 characters	Block name	–	R/W(S)	–	–	–	24
	002		Block Model: DI 64-point Terminal	504	504	–	R/W(S)	–	–	–	2
Special	003		Execution error display 0: Normal, Other: Error (See Appendix "Execution Error Code List.")		0000	–	r	–	–	–	2
Parameter	004		Operation cycle (sec) 0: Common, 1: 0.1, 2: 0.2, 3: 0.5, 4: 1, 5: 2	0 to 5	0	–	R/W(S)	–	–	–	2
	007		CIO word No. (Enter leading word No. allocated to I/O.)	0 to 32767	32767	–	R/W(S)	–	–	–	2
Contact output (field input)	010	U0	Contact output (field contact input)	0, 1	0	Yes	–	–	–	R	1
	to		to			Yes					
	025	U15	Contact output (field contact input)	0, 1	0	Yes	–	–	–	R	1
	026	U16	Contact output (field contact input)	0, 1	0	Yes	–	–	–	R	1
	to		to			Yes	–				
	041	U31	Contact output (field contact input)	0, 1	0	Yes		–	–	R	1
	042	U32	Contact output (field contact input)	0, 1	0	Yes	–	–	–	R	1
	to		to			Yes	–				
	057	U47	Contact output (field contact input)	0, 1	0	Yes		–	–	R	1
	058	U48	Contact output (field contact input)	0, 1	0	Yes	–	–	–	R	1
	to		to			Yes	–				
	073	U63	Contact output (field contact input)	0, 1	0	Yes		–	–	R	1

Block Model	Block Name	Block Address
<511>	DO 5-point Terminal	901 to 980

Outline

This function block is the Field Terminal block for outputting five contacts from 5-point Output Units (C200H-OC223).

Note1: The word number to be assigned for analog/input to CIO (channel I/O) Area on the CPU Unit must be set to ITEM007 (CIO word No.).
Note2: The data of the five contact points are written to the lower four bits 00 to 04 of 1st word of the allocated CIO. 0 (OFF) is written to remaining bits 05 to 15.

Block diagram

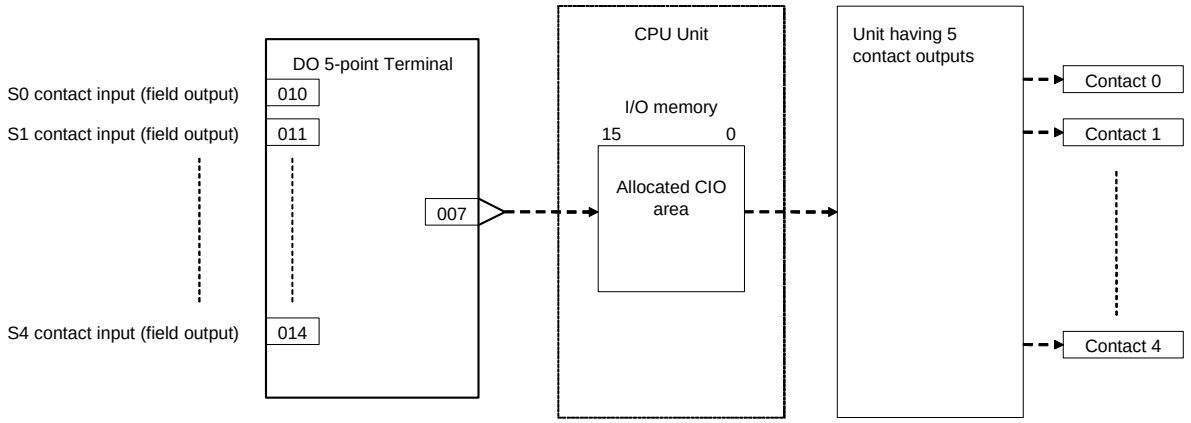

ITEM list

*1:On the CX-Process Monitor, the R/W mode is indicated in the Tuning screen or in the Control screen.

ITEM TYPE	ITEM	Symbol	Data Description	Data Range	Default	COLD start initialization	R/W Mode R: Read, W: Write, R/W: R/W-enabled, -: R/W-disabled Note: r and r/w: Read and read/write for validate action or monitor run status by CX-Process Tool or Monitor, (S): Initial setting data, (O): Operation data				Data Length (bytes)
							According to CX-Process Tool	According to CX-Process Monitor *1	According to ITEM Setting block	According to Step Ladder Program	
Contact input	000		Stop block operation command (0: Cancel stop, 1: Stop)	0, 1	0	–	–	–	–	–	1
Parameter	001		Comment	23 characters	Block name	–	R/W(S)	–	–	–	24
	002		Block Model: DO 5-point Terminal	511	511	–	R/W(S)	–	–	–	2
Special	003		Execution error display 0: Normal, Other: Error (See Appendix "Execution Error Code List.")		0000	–	r	–	–	–	2
Parameter	004		Operation cycle (sec) 0: Common, 1: 0.1, 2: 0.2, 3: 0.5, 4: 1, 5: 2	0 to 5	0	–	R/W(S)	–	–	–	2
	007		CIO word No. (Enter leading word No. allocated to I/O.)	0 to 32767	32767	–	R/W(S)	–	–	–	2
Contact input (field contact output)	010	S0	Contact input (field contact output)	0, 1	0	Yes	–	–	–	R/W	1
	to		to			Yes					
	014	S4	Contact input (field contact output)	0, 1	0	Yes	–	–	–	R/W	1

Block Model	Block Name	Block Address
<512>	DO 8-point Terminal	901 to 980

Outline

This function block is the Field Terminal block for outputting eight contacts from 8-point Output Units (C200H-O□□□□).

Note1: The word number to be assigned for analog/input to CIO (channel I/O) Area on the CPU Unit must be set to ITEM007 (CIO word No.).
Note2: The data of the eight contact points are written to the lower eight bits 00 to 07 of 1st word of the allocated CIO. 0 (OFF) is written to remaining bits 08 to 15.

Block diagram

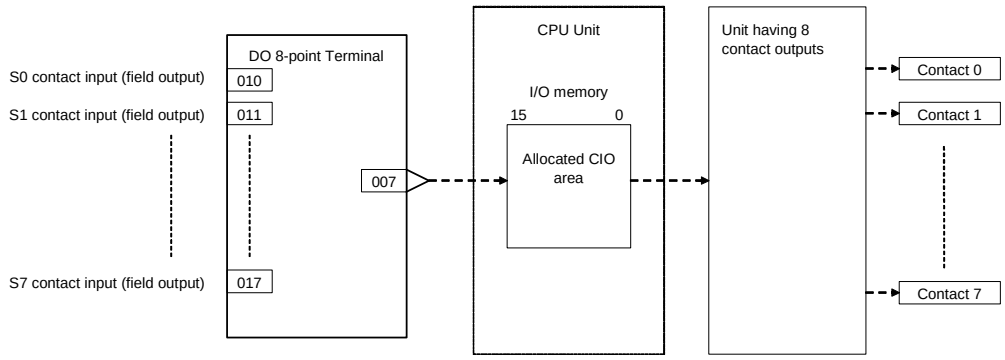

ITEM list

*1:On the CX-Process Monitor, the R/W mode is indicated in the Tuning screen or in the Control screen.

ITEM TYPE	ITEM	Symbol	Data Description	Data Range	Default	COLD start initialization	R/W Mode R: Read, W: Write, R/W: R/W-enabled, -: R/W-disabled Note: r and r/w: Read and read/write for validate action or monitor run status by CX-Process Tool or Monitor, (S): Initial setting data, (O): Operation data				Data Length (bytes)
							According to CX-Process Tool	According to CX-Process Monitor *1	According to ITEM Setting block	According to Step Ladder Program	
Contact input	000		Stop block operation command (0: Cancel stop, 1: Stop)	0, 1	0	–	–	–	–	–	1
Parameter	001		Comment	23 characters	Block name	–	R/W(S)	–	–	–	24
	002		Block Model: DO 8-point Terminal	512	512	–	R/W(S)	–	–	–	2
Special	003		Execution error display 0: Normal, Other: Error (See Appendix "Execution Error Code List.")		0000	–	r	–	–	–	2
Parameter	004		Operation cycle (sec) 0: Common, 1: 0.1, 2: 0.2, 3: 0.5, 4: 1, 5: 2	0 to 5	0	–	R/W(S)	–	–	–	2
	007		CIO word No. (Enter leading word No. allocated to I/O.)	0 to 32767	32767	–	R/W(S)	–	–	–	2
Contact input (field contact output)	010	S0	Contact input (field contact output)	0, 1	0	Yes	–	–	–	R/W	1
	to		to			Yes					
	017	S7	Contact input (field contact output)	0, 1	0	Yes	–	–	–	R/W	1

Block Model	Block Name	Block Address
<513>	DO 12-point Terminal	901 to 980

Outline

This function block is the Field Terminal block for outputting 12 contacts from 12-point Output Units (C200H-O□□□).

Note1: The word number to be assigned for analog/input to CIO (channel I/O) Area on the CPU Unit must be set to ITEM007 (CIO word No.).
Note2: The data of the 12 contact points are written to the lower 12 bits 00 to 11 of 1st word of the allocated CIO. 0 (OFF) is written to remaining bits 12 to 15.

Block diagram

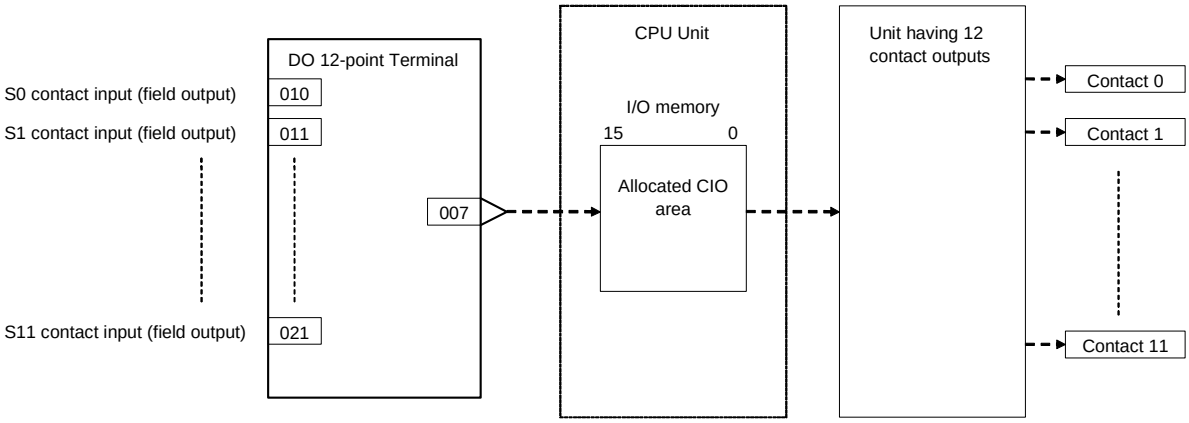

ITEM list

*1:On the CX-Process Monitor, the R/W mode is indicated in the Tuning screen or in the Control screen.

ITEM TYPE	ITEM	Symbol	Data Description	Data Range	Default	COLD start initialization	R/W Mode R: Read, W: Write, R/W: R/W-enabled, -: R/W-disabled Note: r and r/w: Read and read/write for validate action or monitor run status by CX-Process Tool or Monitor, (S): Initial setting data, (O): Operation data				Data Length (bytes)
							According to CX-Process Tool	According to CX-Process Monitor *1	According to ITEM Setting block	According to Step Ladder Program	
Contact input	000		Stop block operation command (0: Cancel stop, 1: Stop)	0, 1	0	–	–	–	–	–	1
Parameter	001		Comment	23 characters	Block name	–	R/W(S)	–	–	–	24
	002		Block Model: DO 12-point Terminal	513	513	–	R/W(S)	–	–	–	2
Special	003		Execution error display 0: Normal, Other: Error (See Appendix "Execution Error Code List.")		0000	–	r	–	–	–	2
Parameter	004		Operation cycle (sec) 0: Common, 1: 0.1, 2: 0.2, 3: 0.5, 4: 1, 5: 2	0 to 5	0	–	R/W(S)	–	–	–	2
	007		CIO word No. (Enter leading word No. allocated to I/O.)	0 to 32767	32767	–	R/W(S)	–	–	–	2
Contact input (field contact output)	010	S0	Contact input (field contact output)	0, 1	0	Yes	–	–	–	R/W	1
	to		to			Yes					
	021	S11	Contact input (field contact output)	0, 1	0	Yes	–	–	–	R/W	1

Block Model	Block Name	Block Address
<514>	DO 16-point Terminal	901 to 980

Outline

This function block is the Field Terminal block for outputting 16 contacts from 16-point Output Units (C200H-OD□□□ or CS1W-O□□□□).

Note: The word number to be assigned for analog/input to CIO (channel I/O) Area on the CPU Unit must be set to ITEM007 (CIO word No.).

Block diagram

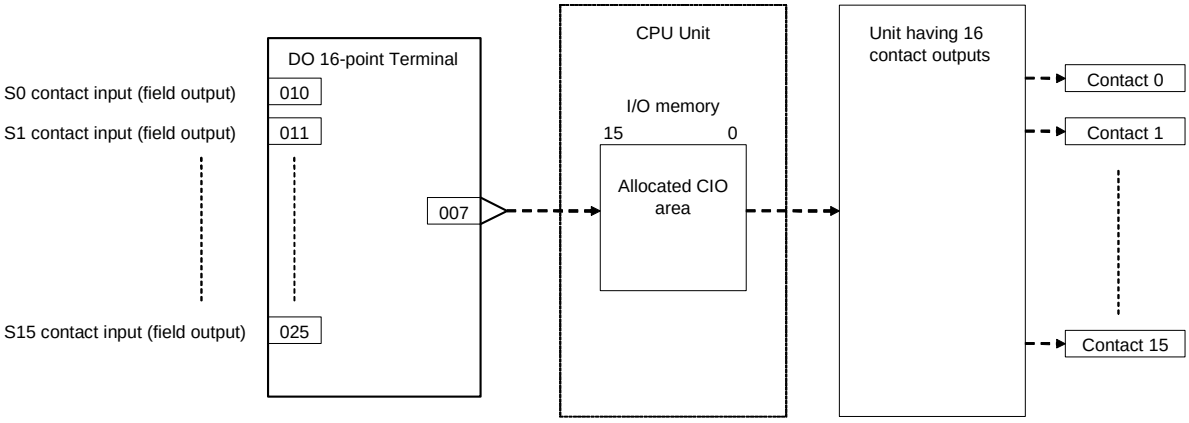

ITEM list

*1:On the CX-Process Monitor, the R/W mode is indicated in the Tuning screen or in the Control screen.

ITEM TYPE	ITEM	Symbol	Data Description	Data Range	Default	COLD start initialization	R/W Mode R: Read, W: Write, R/W: R/W-enabled, -: R/W-disabled Note: r and r/w: Read and read/write for validate action or monitor run status by CX-Process Tool or Monitor, (S): Initial setting data, (O): Operation data				Data Length (bytes)
							According to CX-Process Tool	According to CX-Process Monitor *1	According to ITEM Setting block	According to Step Ladder Program	
Contact input	000		Stop block operation command (0: Cancel stop, 1: Stop)	0, 1	0	–	–	–	–	–	1
Parameter	001		Comment	23 characters	Block name	–	R/W(S)	–	–	–	24
	002		Block Model: DO 16-point Terminal	514	514	–	R/W(S)	–	–	–	2
Special	003		Execution error display 0: Normal, Other: Error (See Appendix "Execution Error Code List.")		0000	–	r	–	–	–	2
Parameter	004		Operation cycle (sec) 0: Common, 1: 0.1, 2: 0.2, 3: 0.5, 4: 1, 5: 2	0 to 5	0	–	R/W(S)	–	–	–	2
	007		CIO word No. (Enter leading word No. allocated to I/O.)	0 to 32767	32767	–	R/W(S)	–	–	–	2
Contact input (field contact output)	010	S0	Contact input (field contact output)	0, 1	0	Yes	–	–	–	R/W	1
	to		to			Yes					
	025	S15	Contact input (field contact output)	0, 1	0	Yes	–	–	–	R/W	1

Block Model	Block Name	Block Address
<515>	DO 32-point Terminal	901 to 980

Outline

This function block is the Field Terminal block for outputting 32 contacts from 32-point Output Units (C200H-OD218, CS1W-OD23□, or Special I/O Unit C200H-OD215).

Note: The word number to be assigned for analog/input to CIO (channel I/O) Area on the CPU Unit (in the case of the Special I/O Unit, the leading word number allocated to Special I/O Unit relay area) must be set to ITEM007 (CIO word No.).

Block diagram

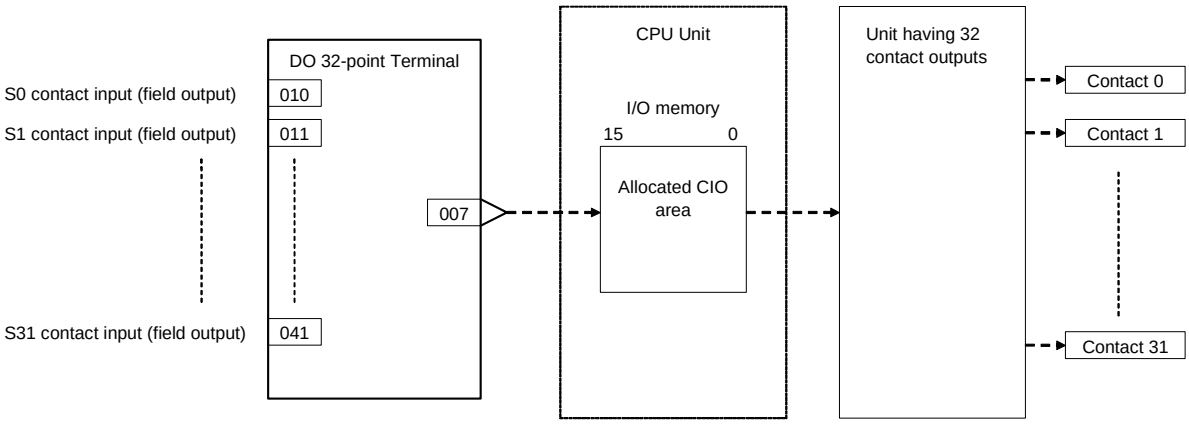

ITEM list

*1:On the CX-Process Monitor, the R/W mode is indicated in the Tuning screen or in the Control screen.

ITEM TYPE	ITEM	Symbol	Data Description	Data Range	Default	COLD start initialization	R/W Mode R: Read, W: Write, R/W: R/W-enabled, -: R/W-disabled Note: r and r/w: Read and read/write for validate action or monitor run status by CX-Process Tool or Monitor, (S): Initial setting data, (O): Operation data				Data Length (bytes)
							According to CX-Process Tool	According to CX-Process Monitor *1	According to ITEM Setting block	According to Step Ladder Program	
Contact input	000		Stop block operation command (0: Cancel stop, 1: Stop)	0, 1	0	–	–	–	–	–	1
Parameter	001		Comment	23 characters	Block name	–	R/W(S)	–	–	–	24
	002		Block Model: DO 32-point Terminal	515	515	–	R/W(S)	–	–	–	2
Special	003		Execution error display 0: Normal, Other: Error (See Appendix "Execution Error Code List.")		0000	–	r	–	–	–	2
Parameter	004		Operation cycle (sec) 0: Common, 1: 0.1, 2: 0.2, 3: 0.5, 4: 1, 5: 2	0 to 5	0	–	R/W(S)	–	–	–	2
	007		CIO word No. (Enter leading word No. allocated to I/O.)	0 to 32767	32767	–	R/W(S)	–	–	–	2
Contact input (field contact output)	010	S0	Contact input (field contact output)	0, 1	0	Yes	–	–	–	R/W	1
	to		to			Yes					
	025	S15	Contact input (field contact output)	0, 1	0	Yes	–	–	–	R/W	1
	026	S16	Contact input (field contact output)	0, 1	0	Yes	–	–	–	R/W	1
	to		to			Yes					
	041	S31	Contact input (field contact output)	0, 1	0	Yes	–	–	–	R/W	1

Block Model	Block Name	Block Address
<516>	DO 64-point Terminal	901 to 980

Outline

This function block is the Field Terminal block for outputting 64 contacts from 64-point Output Units (C200H-OD219 or CS1W-OD26□).

Note: The word number to be assigned for analog/input to CIO (channel I/O) Area on the CPU Unit must be set to ITEM007 (CIO word No.).

Block diagram

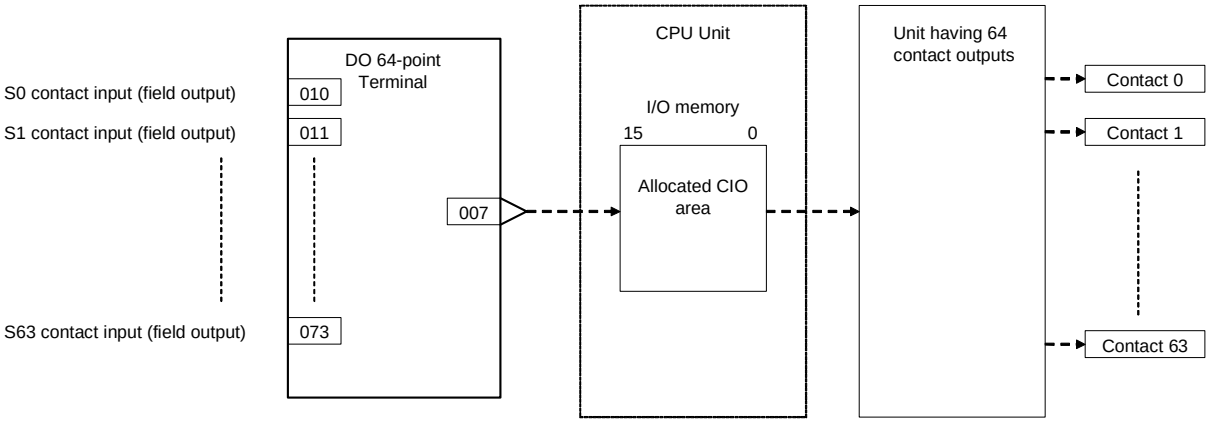

ITEM list

*1:On the CX-Process Monitor, the R/W mode is indicated in the Tuning screen or in the Control screen.

ITEM TYPE	ITEM	Symbol	Data Description	Data Range	Default	COLD start initialization	R/W Mode R: Read, W: Write, R/W: R/W-enabled, -: R/W-disabled Note: r and r/w: Read and read/write for validate action or monitor run status by CX-Process Tool or Monitor, (S): Initial setting data, (O): Operation data				Data Length (bytes)
							According to CX-Process Tool	According to CX-Process Monitor *1	According to ITEM Setting block	According to Step Ladder Program	
Contact input	000		Stop block operation command (0: Cancel stop, 1: Stop)	0, 1	0	–	–	–	–	–	1
Parameter	001		Comment	23 characters	Block name	–	R/W(S)	–	–	–	24
	002		Block Model: DO 64-point Terminal	516	516	–	R/W(S)	–	–	–	2
Special	003		Execution error display 0: Normal, Other: Error (See Appendix "Execution Error Code List.")		0000	–	r	–	–	–	2
Parameter	004		Operation cycle (sec) 0: Common, 1: 0.1, 2: 0.2, 3: 0.5, 4: 1, 5: 2	0 to 5	0	–	R/W(S)	–	–	–	2
	007		CIO word No. (Enter leading word No. allocated to I/O.)	0 to 32767	32767	–	R/W(S)	–	–	–	2
Contact input (field contact output)	010	S0	Contact input (field contact output)	0, 1	0	Yes	–	–	–	R/W	1
	to		to			Yes					
	025	S15	Contact input (field contact output)	0, 1	0	Yes	–	–	–	R/W	1
	026	S16	Contact input (field contact output)	0, 1	0	Yes	–	–	–	R/W	1
	to		to			Yes					
	041	S31	Contact input (field contact output)	0, 1	0	Yes	–	–	–	R/W	1
	042	S32	Contact input (field contact output)	0, 1	0	Yes	–	–	–	R/W	1
	to		to			Yes					
	073	S63	Contact input (field contact output)	0, 1	0	Yes	–	–	–	R/W	1

Block Model	Block Name	Block Address
<518>	DI 16-point/DO 16-point Terminal	901 to 980

Outline

This function block is the Field Terminal block for inputting 16 contacts and outputting 16 contacts from 16-point Input/16-point Output Units (Special I/O Unit C200H-MD□□□).

Note: The word number to be assigned for analog/input to CIO (channel I/O) Area on the CPU Unit must be set to ITEM007 (CIO word No.).

Block diagram

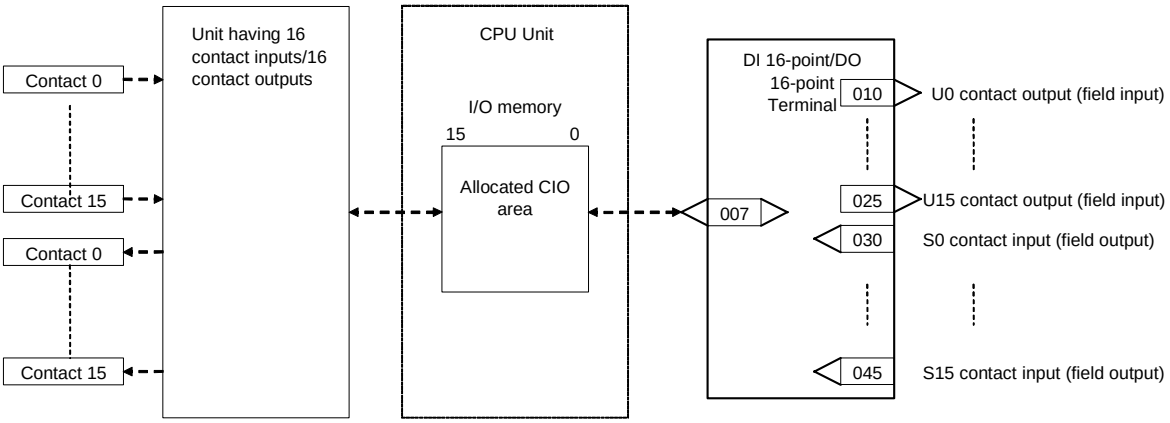

ITEM list

*1:On the CX-Process Monitor, the R/W mode is indicated in the Tuning screen or in the Control screen.

ITEM TYPE	ITEM	Symbol	Data Description	Data Range	Default	COLD start initialization	R/W Mode R: Read, W: Write, R/W: R/W-enabled, -: R/W-disabled Note: r and r/w: Read and read/write for validate action or monitor run status by CX-Process Tool or Monitor, (S): Initial setting data, (O): Operation data				Data Length (bytes)
							According to CX-Process Tool	According to CX-Process Monitor *1	According to ITEM Setting block	According to Step Ladder Program	
Contact input	000		Stop block operation command (0: Cancel stop, 1: Stop)	0, 1	0	–	–	–	–	–	1
Parameter	001		Comment	23 characters	Block name	–	R/W(S)	–	–	–	24
	002		Block Model: DI 16-point/DO 16-point Terminal	518	518	–	R/W(S)	–	–	–	2
Special	003		Execution error display 0: Normal, Other: Error (See Appendix "Execution Error Code List.")		0000	–	r	–	–	–	2
Parameter	004		Operation cycle (sec) 0: Common, 1: 0.1, 2: 0.2, 3: 0.5, 4: 1, 5: 2	0 to 5	0	–	R/W(S)	–	–	–	2
	007		CIO word No. (Enter leading word No. allocated to I/O.)	0 to 32767	32767	–	R/W(S)	–	–	–	2
Contact output (field output)	010	U0	Contact input (field contact output)	0, 1	0	Yes	–	–	–	R	1
	to		to			Yes					
	025	U15	Contact input (field contact output)	0, 1	0	Yes	–	–	–	R	1
Contact input (field contact output)	030	S0	Contact input (field contact output)	0, 1	0	Yes	–	–	–	R/W	1
	to		to			Yes					
	045	S15	Contact input (field contact output)	0, 1	0	Yes	–	–	–	R/W	1

Block Model	Block Name	Block Address
<525>	DI 96-point Terminal	901 to 980

Outline

This function block is the Field Terminal block for inputting 96 contacts from 96-point Input Units (CS1W-ID291).

Note: The word number to be assigned for analog/input to CIO (channel I/O) Area on the CPU Unit must be set to ITEM007 (CIO word No.).

Block diagram

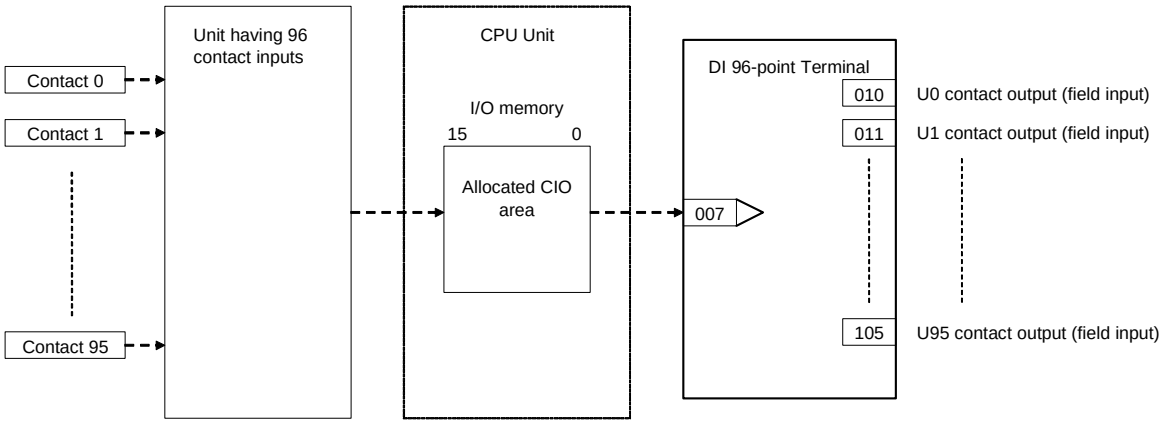

ITEM list

*1:On the CX-Process Monitor, the R/W mode is indicated in the Tuning screen or in the Control screen.

ITEM TYPE	ITEM	Symbol	Data Description	Data Range	Default	COLD start initialization	R/W Mode R: Read, W: Write, R/W: R/W-enabled, -: R/W-disabled Note: r and r/w: Read and read/write for validate action or monitor run status by CX-Process Tool or Monitor, (S): Initial setting data, (O): Operation data				Data Length (bytes)
							According to CX-Process Tool	According to CX-Process Monitor *1	According to ITEM Setting block	According to Step Ladder Program	
Contact input	000		Stop block operation command (0: Cancel stop, 1: Stop)	0, 1	0	–	–	–	–	–	1
Parameter	001		Comment	23 characters	Block name	–	R/W(S)	–	–	–	24
	002		Block Model: DI 96-point Terminal	525	525	–	R/W(S)	–	–	–	2
Special	003		Execution error display 0: Normal, Other: Error (See Appendix "Execution Error Code List.")		0000	–	r	–	–	–	2
Parameter	004		Operation cycle (sec) 0: Common, 1: 0.1, 2: 0.2, 3: 0.5, 4: 1, 5: 2	0 to 5	0	–	R/W(S)	–	–	–	2
	007		CIO word No. (Enter leading word No. allocated to I/O.)	0 to 32767	32767	–	R/W(S)	–	–	–	2
Contact output (field contact input)	010	U0	Contact input (field contact output)	0, 1	0	Yes	–	–	–	R	1
	to		to			Yes					
	025	U15	Contact input (field contact output)	0, 1	0	Yes	–	–	–	R	1
	026	U16	Contact input (field contact output)	0, 1	0	Yes	–	–	–	R	1
	to		to			Yes					
	105	U95	Contact input (field contact output)	0, 1	0	Yes	–	–	–	R	1

Block Model	Block Name	Block Address
<537>	DO 96-point Terminal	901 to 980

Outline

This function block is the Field Terminal block for outputting 96 contacts from 96-point Output Units (CS1W-OD29 □).

Note: The word number to be assigned for analog/input to CIO (channel I/O) Area on the CPU Unit must be set to ITEM007 (CIO word No.).

Block diagram

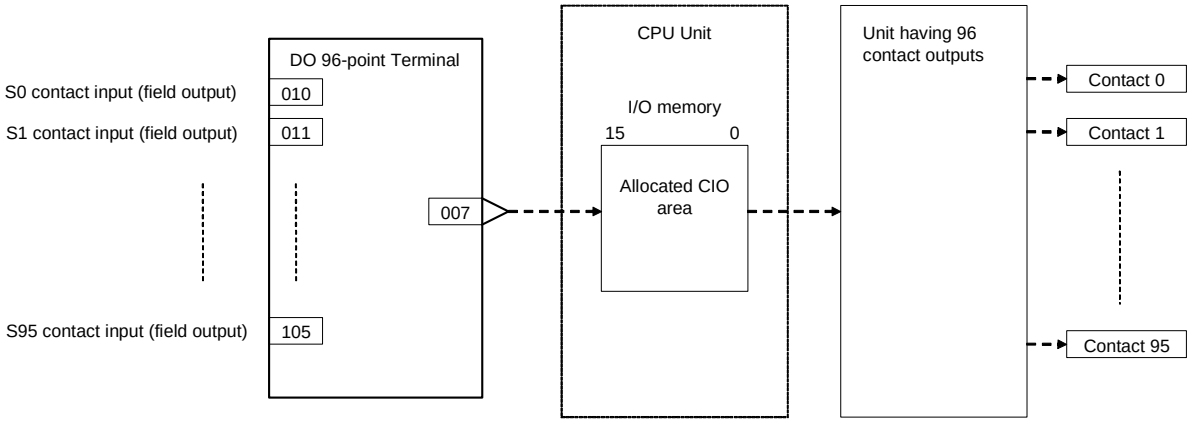

ITEM list

*1:On the CX-Process Monitor, the R/W mode is indicated in the Tuning screen or in the Control screen.

ITEM TYPE	ITEM	Symbol	Data Description	Data Range	Default	COLD start initialization	R/W Mode R: Read, W: Write, R/W: R/W-enabled, -: R/W-disabled Note: r and r/w: Read and read/write for validate action or monitor run status by CX-Process Tool or Monitor, (S): Initial setting data, (O): Operation data				Data Length (bytes)
							According to CX-Process Tool	According to CX-Process Monitor *1	According to ITEM Setting block	According to Step Ladder Program	
Contact input	000		Stop block operation command (0: Cancel stop, 1: Stop)	0, 1	0	–	–	–	–	–	1
Parameter	001		Comment	23 characters	Block name	–	R/W(S)	–	–	–	24
	002		Block Model: DO 96-point Terminal	537	537	–	R/W(S)	–	–	–	2
Special	003		Execution error display 0: Normal, Other: Error (See Appendix "Execution Error Code List.")		0000	–	r	–	–	–	2
Parameter	004		Operation cycle (sec) 0: Common, 1: 0.1, 2: 0.2, 3: 0.5, 4: 1, 5: 2	0 to 5	0	–	R/W(S)	–	–	–	2
	007		CIO word No. (Enter leading word No. allocated to I/O.)	0 to 32767	32767	–	R/W(S)	–	–	–	2
Contact input (field contact output)	010	S0	Contact input (field contact output)	0, 1	0	Yes	–	–	–	R/W	1
	to		to			Yes					
	025	S15	Contact input (field contact output)	0, 1	0	Yes	–	–	–	R/W	1
	026	S16	Contact input (field contact output)	0, 1	0	Yes	–	–	–	R/W	1
	to		to			Yes					
	105	S95	Contact input (field contact output)	0, 1	0	Yes	–	–	–	R/W	1

Block Model	Block Name	Block Address
<544>	DI 48-point/DO 48-point Terminal	901 to 980

Outline

This function block is the Field Terminal block for inputting 48 contacts and outputting 48 contacts from 48-point Input/48-point Output Units (CS1W-MD29□).

Note: The word number to be assigned for analog/input to CIO (channel I/O) Area on the CPU Unit must be set to ITEM007 (CIO word No.).

Block diagram

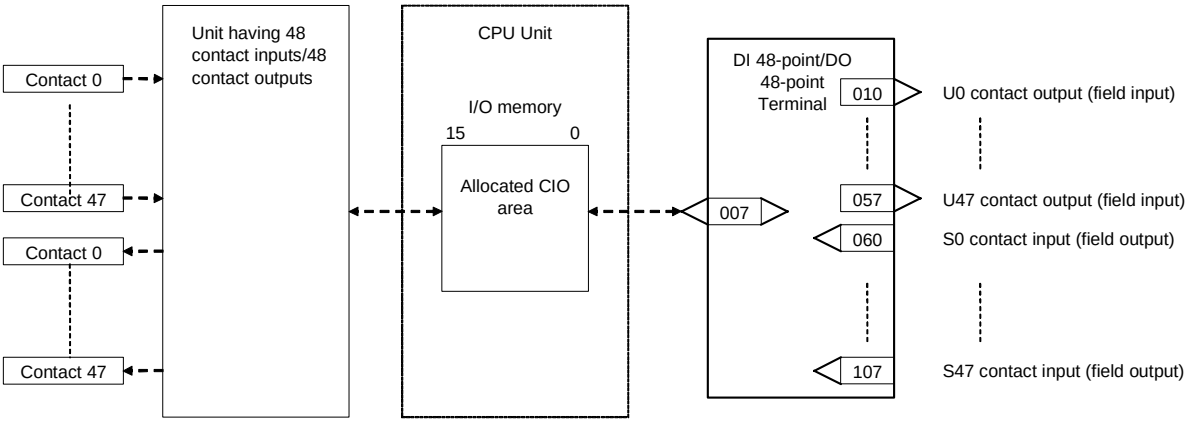

ITEM list

*1:On the CX-Process Monitor, the R/W mode is indicated in the Tuning screen or in the Control screen.

ITEM TYPE	ITEM	Symbol	Data Description	Data Range	Default	COLD start initialization	R/W Mode R: Read, W: Write, R/W: R/W-enabled, -: R/W-disabled Note: r and r/w: Read and read/write for validate action or monitor run status by CX-Process Tool or Monitor, (S): Initial setting data, (O): Operation data				Data Length (bytes)
							According to CX-Process Tool	According to CX-Process Monitor *1	According to ITEM Setting block	According to Step Ladder Program	
Contact input	000		Stop block operation command (0: Cancel stop, 1: Stop)	0, 1	0	–	–	–	–	–	1
Parameter	001		Comment	23 characters	Block name	–	R/W(S)	–	–	–	24
	002		Block Model: DI 48-point/ DO 48-point Terminal	544	544	–	R/W(S)	–	–	–	2
Special	003		Execution error display 0: Normal, Other: Error (See Appendix "Execution Error Code List.")		0000	–	r	–	–	–	2
Parameter	004		Operation cycle (sec) 0: Common, 1: 0.1, 2: 0.2, 3: 0.5, 4: 1, 5: 2	0 to 5	0	–	R/W(S)	–	–	–	2
	007		CIO word No. (Enter leading word No. allocated to I/O.)	0 to 32767	32767	–	R/W(S)	–	–	–	2
Contact output (field contact input)	010	U0	Contact input (field contact output)	0, 1	0	Yes	–	–	–	R	1
	to		to			Yes					
	057	U47	Contact input (field contact output)	0, 1	0	Yes	–	–	–	R	1
Contact input (field contact output)	060	S0	Contact input (field contact output)	0, 1	0	Yes	–	–	–	R/W	1
	to		to			Yes					
	107	S47	Contact input (field contact output)	0, 1	0	Yes	–	–	–	R/W	1

Block Model	Block Name	Block Address
<551>	AI 8-point Terminal (AD003)	901 to 980

Outline

This function block is the Field Terminal block for inputting eight analog signals from 8-point Input Units (C200H-AD003).

Note1: Prevent the averaging function of the Analog Input Unit from duplicating the functions of the function blocks on the Loop Control Unit.

Note2: For details on how to set the Analog Input Unit, see the Analog I/O Unit User's Manual.

Block diagram

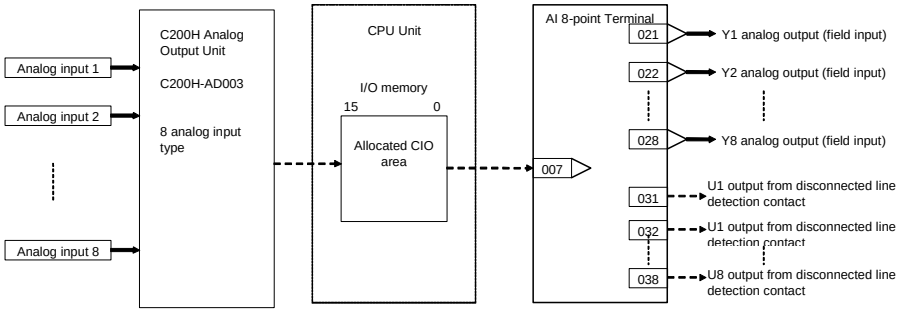

ITEM list

*1:On the CX-Process Monitor, the R/W mode is indicated in the Tuning screen or in the Control screen.

ITEM TYPE	ITEM	Symbol	Data Description	Data Range	Default	COLD start initialization	R/W Mode R: Read, W: Write, R/W: R/W-enabled, -: R/W-disabled Note: r and r/w: Read and read/write for validate action or monitor run status by CX-Process Tool or Monitor, (S): Initial setting data, (O): Operation data				Data Length (bytes)
							According to CX-Process Tool	According to CX-Process Monitor *1	According to ITEM Setting block	According to Step Ladder Program	
Contact input	000		Stop block operation command (0: Cancel stop, 1: Stop)	0, 1	0	–	–	–	–	–	1
Parameter	001		Comment	23 characters	Block name	–	R/W(S)	–	–	–	24
	002		Block Model: AI 8-point Terminal (AD003)	551	551	–	R/W(S)	–	–	–	2
Special	003		Execution error display 0: Normal, Other: Error (See Appendix "Execution Error Code List.")		0000	–	r	–	–	–	2
Parameter	004		Operation cycle (sec) 0: Common, 1: 0.1, 2: 0.2, 3: 0.5, 4: 1, 5: 2	0 to 5	0	–	R/W(S)	–	–	–	2
	007		Unit number	0 to 15	15	–	R/W(S)	–	–	–	2
	011	S1	No.1 input range (0: 1 to 5V/4 to 20mA/0 to 10V, 1: -10 to +10V)	0, 1	0	–	R/W(S)	–	–	–	2
	to		to			–					
	018	S8	No.8 input range (0: 1 to 5V/4 to 20mA/0 to 10V, 1: -10 to +10V)	0, 1	0	–	R/W(S)	–	–	–	2
Analog output (field input)	021	Y1	Analog output (field input)	-5.00 to +105.00%	0.00	Yes	r/w	–	–	–	2
	to		to			Yes					
	028	Y8	Analog output (field input)	-5.00 to +105.00%	0.00	Yes	r/w	–	–	–	2
Contact output	031	U1	Output from disconnected line detection contact (0: No error, 1: Disconnected line)		0	Yes	–	–	–	R	1
	to		to			Yes					
	038	U8	Output from disconnected line detection contact (0: No error, 1: Disconnected line)		0	Yes	–	–	–	R	1

Block Model	Block Name	Block Address
<552>	AO 8-point Terminal (DA003/4)	901 to 980

Outline

This function block is the Field Terminal block for outputting eight analog signals from 8-point Output Units (C200H-DA003/004).

Note1: Prevent the output hold function of the Analog Output Unit from duplicating the functions of the function blocks on the Loop Control Unit.
Note2: For details on how to set the Analog Output Unit, see the Analog I/O Unit User's Manual (Cat. No. SCCC-338).
Note3: 00FF Hex is automatically set to the 1st word (n) of the allocated relay area of C200H-DA003/004. As a result of this, the Conversion Enabled flag for each of the analog output points is always 1 (start of conversion output). For this reason, conversion output of the Analog Output Unit cannot be stopped.

Block diagram

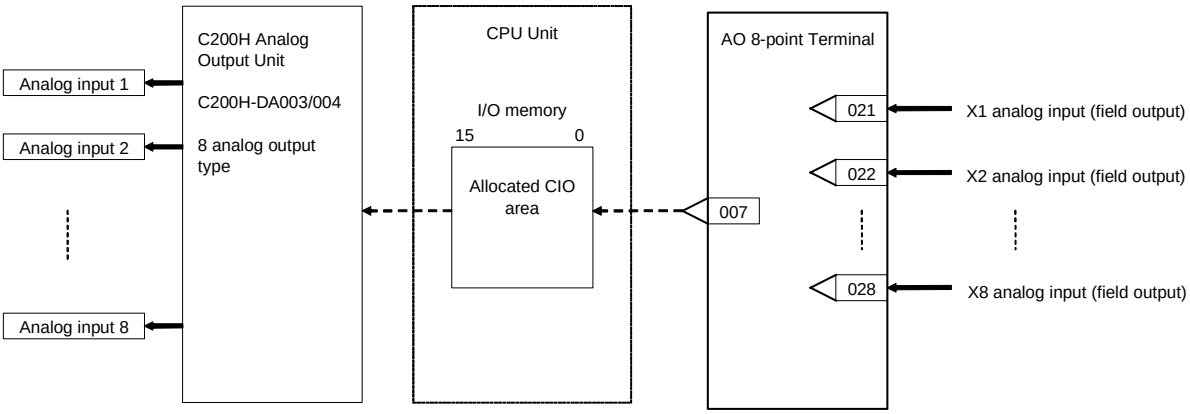

ITEM list

*1:On the CX-Process Monitor, the R/W mode is indicated in the Tuning screen or in the Control screen.

ITEM TYPE	ITEM	Symbol	Data Description	Data Range	Default	COLD start initialization	R/W Mode R: Read, W: Write, R/W: R/W-enabled, -: R/W-disabled Note: r and r/w: Read and read/write for validate action or monitor run status by CX-Process Tool or Monitor, (S): Initial setting data, (O): Operation data				Data Length (bytes)
							According to CX-Process Tool	According to CX-Process Monitor *1	According to ITEM Setting block	According to Step Ladder Program	
Contact input	000		Stop block operation command (0: Cancel stop, 1: Stop)	0, 1	0	–	–	–	–	–	1
Parameter	001		Comment	23 characters	Block name	–	R/W(S)	–	–	–	24
	002		Block Model: AO 8-point Terminal	552	552	–	R/W(S)	–	–	–	2
Special	003		Execution error display 0: Normal, Other: Error (See Appendix "Execution Error Code List.")		0000	–	r	–	–	–	2
Parameter	004		Operation cycle (sec) 0: Common, 1: 0.1, 2: 0.2, 3: 0.5, 4: 1, 5: 2	0 to 5	0	–	R/W(S)	–	–	–	2
	007		Unit number	0 to 15	15	–	R/W(S)	–	–	–	2
	011		No.1 input range (0: 1 to 5V/0 to 10V/4 to 20mA, 1: -10 to +10V)	0, 1	0	–	R/W(S)	–	–	–	2
	to		to			–					
	018		No.8 input range (0: 1 to 5V/0 to 10V/4 to 20mA , 1: -10 to +10V)	0, 1	0	–	R/W(S)	–	–	–	2
Analog input connection information	021		X1 source designation BBB: Block No., III: ITEM No.	BBBIII	000000	–	R/W(S)	–	–	–	4
	to		to			–					
	028		X8 source designation BBB: Block No., III: ITEM No.	BBBIII	000000	–	R/W(S)	–	–	–	4
Analog input (field output)	031	X1	Analog input (field output)	-5.00 to +105.00%	0.00	Yes	r	–	–	–	2
	to		to			Yes					
	038	X8	Analog input (field output)	-5.00 to +105.00%	0.00	Yes	r	–	–	–	2

Block Model	Block Name	Block Address
<553>	AI 2-point/AO 2-point Terminal (MAD01)	901 to 980

Outline

This function block is the Field Terminal block for inputting two analog signals and outputting two analog signals from 2-point Input/2-point Output Units (C200H-MAD01).

Note1: Prevent the averaging, peak hold, output hold and ratio conversion functions of the Analog Input/Output Unit from duplicating the functions of the function blocks on the Loop Control Unit.
Note2: For details on how to set the Analog Output Unit, see the Analog I/O Unit User's Manual (Cat. No. SCCC-338).
Note3: 0003 Hex is automatically set to the 1st word (n) of the allocated relay area of C200H-MAD01. As a result of this, the Conversion Enabled flag for each of the analog output points is always 1 (start of conversion output). For this reason, conversion output of analog output cannot be stopped, and the peak hold function of analog input cannot be used.

Block diagram

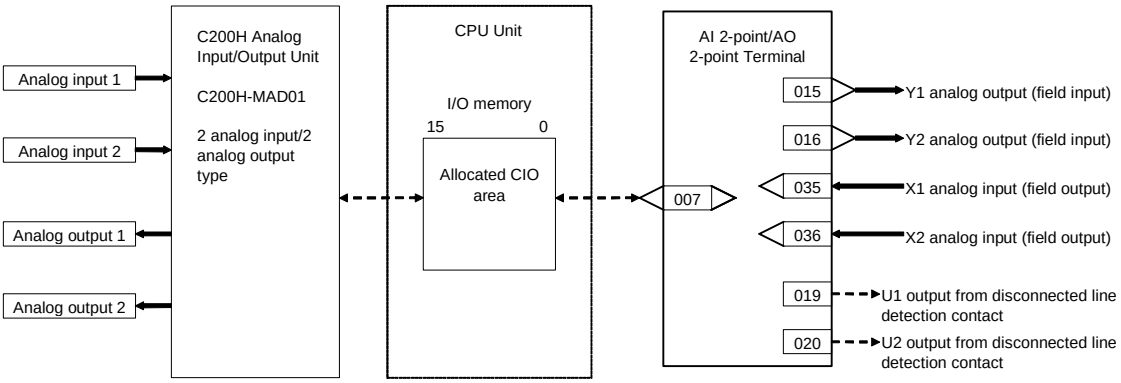

ITEM list

*1:On the CX-Process Monitor, the R/W mode is indicated in the Tuning screen or in the Control screen.

ITEM TYPE	ITEM	Symbol	Data Description	Data Range	Default	COLD start initialization	R/W Mode R: Read, W: Write, R/W: R/W-enabled, -: R/W-disabled Note: r and r/w: Read and read/write for validate action or monitor run status by CX-Process Tool or Monitor, (S): Initial setting data, (O): Operation data				Data Length (bytes)
							According to CX-Process Tool	According to CX-Process Monitor *1	According to ITEM Setting block	According to Step Ladder Program	
Contact input	000		Stop block operation command (0: Cancel stop, 1: Stop)	0, 1	0	–	–	–	–	–	1
Parameter	001		Comment	23 characters	Block name	–	R/W(S)	–	–	–	24
	002		Block Model: AI 2-point/AO 2-point Terminal (MAD01)	553	553	–	R/W(S)	–	–	–	2
Special	003		Execution error display 0: Normal, Other: Error (See Appendix "Execution Error Code List.")		0000	–	r	–	–	–	2
Parameter	004		Operation cycle (sec) 0: Common, 1: 0.1, 2: 0.2, 3: 0.5, 4: 1, 5: 2	0 to 5	0	–	R/W(S)	–	–	–	2
	007		Unit number	0 to 15	15	–	R/W(S)	–	–	–	2
	011		No.1 input range (0: 1 to 5V/4 to 20mA/0 to 10V, 1: -10 to +10V)	0, 1	0	–	R/W(S)	–	–	–	1
	012		No.2 input range (0: 1 to 5V/4 to 20mA/0 to 10V, 1: -10 to +10V)	0, 1	0	–	R/W(S)	–	–	–	1
Analog output	015	Y1	Analog output (field input)	-5.00 to +105.00%	0.00	Yes	r/w	–	–	–	2
	016	Y2	Analog output (field input)	-5.00 to +105.00%	0.00	Yes	r/w	–	–	–	2
Parameter	019	U1	Output from disconnected line detection contact (0: No error, 1: Disconnected line) Note)	0, 1	0	Yes	–	–	–	R	1
	020	U2	Output from disconnected line detection contact (0: No error, 1: Disconnected line) Note)	0, 1	0	Yes	–	–	–	R	1
	031		No.1 output range (0: 1 to 5V/0 to 10V, 1: -10 to +10V)	0, 1	0	–	R/W(S)	–	–	–	2
	032		No.2 output range (0: 1 to 5V/0 to 10V, 1: -10 to +10V)	0, 1	0	–	R/W(S)	–	–	–	2
Analog input connection information	035		X1 source designation BBB: Block No., III: ITEM No.	BBBIII	000000	–	R/W(S)	–	–	–	4
	036		X2 source designation BBB: Block No., III: ITEM No.	BBBIII	000000	–	R/W(S)	–	–	–	4
Analog input (field output)	039	X1	Analog input (field output)	-5.00 to +105.00%	0.00	Yes	r	–	–	–	2
	040	X2	Analog input (field output)	-5.00 to +105.00%	0.00	Yes	r	–	–	–	2

Note: Disconnected line detection functions only when the input is 1 to 5V/4 to 20mA.

Block Model	Block Name	Block Address
<561>	AI 4-point Terminal (PTS01/02/03, PDC01, PTW01)	901 to 980

Outline

This function block is the Field Terminal for inputting four analog signals from one of Isolated-type Thermocouple Input Unit (CS1W-PTS01), Isolated-type Temperature-resistance Thermometer Input Unit (CS1W-PTS02/03), Isolated-type Analog Input Unit (CS1W-PDC01) or 2-lead Transmitter Input Unit (CS1W-PTW01). Either one range can be set for all points (Y1 to Y8) or a different range can be set for each point (supported from version 2.50 of the Loop Control Unit).

Block diagram

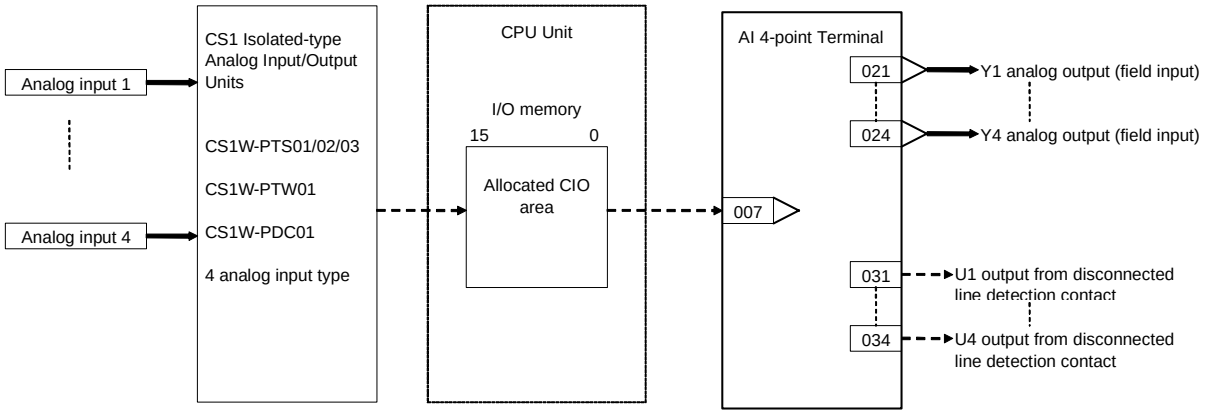

ITEM list

*1:On the CX-Process Monitor, the R/W mode is indicated in the Tuning screen or in the Control screen.

ITEM TYPE	ITEM	Symbol	Data Description	Data Range	Default	COLD start initialization	R/W Mode R: Read, W: Write, R/W: R/W-enabled, -: R/W-disabled Note: r and r/w: Read and read/write for validate action or monitor run status by CX-Process Tool or Monitor, (S): Initial setting data, (O): Operation data				Data Length (bytes)
							According to CX-Process Tool	According to CX-Process Monitor *1	According to ITEM Setting block	According to Step Ladder Program	
Contact input	000		Stop block operation command (0: Cancel stop, 1: Stop)	0, 1	0	–	–	–	–	–	1
Parameter	001		Comment	23 characters	Block name	–	R/W(S)	–	–	–	24
	002		Block Model: AI 4-point Terminal (PTS01/02/03, PDC01, PTW01)	561	561	–	R/W(S)	–	–	–	2
Special	003		Execution error display 0: Normal, Other: Error (See Appendix "Execution Error Code List.")		0000	–	r	–	–	–	2
Parameter	004		Operation cycle (sec) 0: Common, 1: 0.1, 2: 0.2, 3: 0.5, 4: 1, 5: 2	0 to 5	0	–	R/W(S)	–	–	–	2
	007		Unit number	0 to 95	95	–	R/W(S)	–	–	–	2
	008*1		Range conversion method 0: Common setting for all ranges, 1: Individual setting for each range	0, 1	0	–	R/W (S)	–	–	–	1
	010		Common or Y1 input range conversion (0: 0 to 10000, 1: 0 to 4000, 2: –2000 to 2000, 3: 0 to 6000, 4: –3000 to 3000, 9: Range specified at ITEM011 and ITEM012) Note: ITEM 008 determines if this parameter is for all ranges or only the Y1 input range.	0 to 4, 9	1	–	R/W(S)	–	–	–	1
	011		0% value for all ranges or Y1 range	±32000	0	–	R/W(S)	–	–	–	2
	012		100% value for all ranges or Y1 range	±32000	4000	–	R/W(S)	–	–	–	2
Analog output (field input)	021	Y1	Analog output (field input)	-15.00 to +115.00	0.00	Yes	r/w	–	–	–	2
	to		to			Yes					
	024	Y4	Analog output (field input)	-15.00 to +115.00	0.00	Yes	r/w	–	–	–	2
Contact output	031	U1	Output of input error contact (0: No error, 1: Input error)	0, 1	0	Yes	–	–	–	R	1
	to		to			Yes					
	034	U4	Output of input error contact (0: No error, 1: Input error)	0, 1	0	Yes	–	–	–	R	1

Individual range settings

*1:On the CX-Process Monitor, the R/W mode is indicated in the Tuning screen or in the Control screen.

ITEM TYPE	ITEM	Symbol	Data Description	Data Range	Default	COLD start initialization	R/W Mode R: Read, W: Write, R/W: R/W-enabled, -: R/W-disabled Note: r and r/w: Read and read/write for validate action or monitor run status by CX-Process Tool or Monitor, (S): Initial setting data, (O): Operation data				Data Length (bytes)
							According to CX-Process Tool	According to CX-Process Monitor *1	According to ITEM Setting block	According to Step Ladder Program	
Parameter	050*1		Y2 input range conversion (0: 0 to 10000, 1: 0 to 4000, 2: –2000 to 2000, 3: 0 to 6000, 4: –3000 to 3000, 9: Range specified at ITEM 051 and 052)	0 to 4, 9	1	–	R/W(S)	–	–	–	1
	051*1		0% value for Y2 range	±32000	0	–	R/W(S)	–	–	–	2
	052*1		100% value for Y2 range	±32000	4000	–	R/W(S)	–	–	–	2
	053*1		Y3 input range conversion (0: 0 to 10000, 1: 0 to 4000, 2: –2000 to 2000, 3: 0 to 6000, 4: –3000 to 3000, 9: Range specified at ITEM 054 and 055)	0 to 4, 9	1	–	R/W(S)	–	–	–	1
	054*1		0% value for Y2 range	±32000	0	–	R/W(S)	–	–	–	2
	055*1		100% value for Y2 range	±32000	4000	–	R/W(S)	–	–	–	2
	056*1		Y4 input range conversion (0: 0 to 10000, 1: 0 to 4000, 2: –2000 to 2000, 3: 0 to 6000, 4: –3000 to 3000, 9: Range specified at ITEM 057 and 058)	0 to 4, 9	1	–	R/W(S)	–	–	–	1
	057*1		0% value for Y4 range	±32000	0	–	R/W(S)	–	–	–	2
	058*1		100% value for Y4 range	±32000	4000	–	R/W(S)	–	–	–	2

*1: Supported from version 2.50 of the Loop Control Unit.

Block Model	Block Name	Block Address
<562>	PI 4-point Terminal (PPS01)	901 to 980

Outline

This function block is the Field Block for inputting four pulses from Pulse Input Units (CS1W-PPS01).
Either one range can be set for all points (Y1 to Y8) or a different range can be set for each point (supported from version 2.50 of the Loop Control Unit).

Block diagram

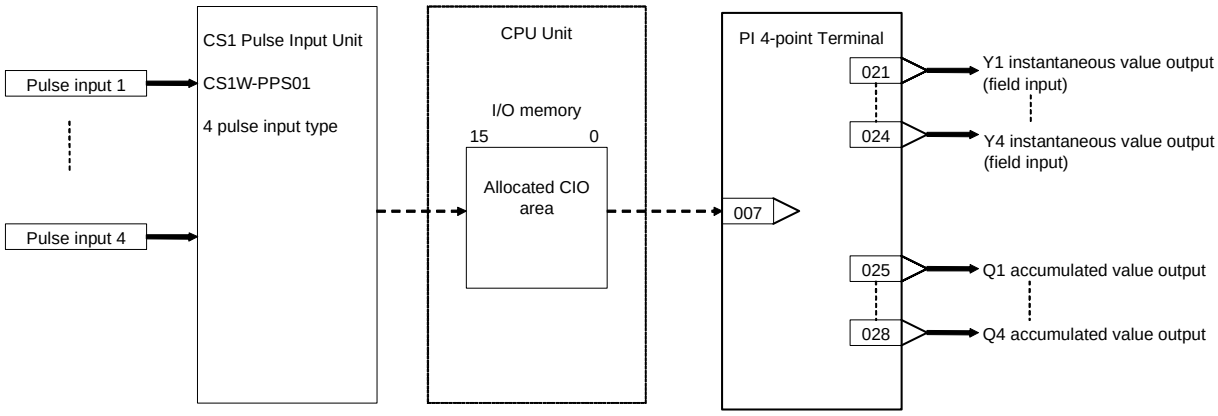

ITEM list

*1:On the CX-Process Monitor, the R/W mode is indicated in the Tuning screen or in the Control screen.

ITEM TYPE	ITEM	Symbol	Data Description	Data Range	Default	COLD start initialization	R/W Mode R: Read, W: Write, R/W: R/W-enabled, -: R/W-disabled Note: r and r/w: Read and read/write for validate action or monitor run status by CX-Process Tool or Monitor, (S): Initial setting data, (O): Operation data				Data Length (bytes)
							According to CX-Process Tool	According to CX-Process Monitor *1	According to ITEM Setting block	According to Step Ladder Program	
Contact input	000		Stop block operation command (0: Cancel stop, 1: Stop)	0, 1	0	–	–	–	–	–	1
Parameter	001		Comment	23 characters	Block name	–	R/W(S)	–	–	–	24
	002		Block Model: PI 4-point Terminal	562	562	–	R/W(S)	–	–	–	2
Special	003		Execution error display 0: Normal, Other: Error (See Appendix "Execution Error Code List.")		0000	–	r	–	–	–	2
Parameter	004		Operation cycle (sec) 0: Common, 1: 0.1, 2: 0.2, 3: 0.5, 4: 1, 5: 2	0 to 5	0	–	R/W(S)	–	–	–	2
	007		Unit number	0 to 95	95	–	R/W(S)	–	–	–	2
	008*1		Range conversion method 0: Common setting for all ranges, 1: Individual setting for each range	0, 1	0	–	R/W (S)	–	–	–	1
	010		Common or Y1 input range conversion (0: 0 to 10000, 1: 0 to 4000, 2: –2000 to 2000, 3: 0 to 6000, 4: –3000 to 3000, 9: Range specified at ITEM011 and ITEM012) Note: ITEM 008 determines if this parameter is for all ranges or only the Y1 input range.	0 to 4, 9	1	–	R/W(S)	–	–	–	1
	011		0% value for all ranges or Y1 range	±32000	0	–	R/W(S)	–	–	–	2
	012		100% value for all ranges or Y1 range	±32000	4000	–	R/W(S)	–	–	–	2
Analog output	021	Y1	Instantaneous value output	0.00 to 115.00%	0.00	Yes	r/w	–	–	–	2
	to	to				Yes					
	024	Y4	Instantaneous value output	0.00 to 115.00%	0.00	Yes	r/w	–	–	–	2
Accumu-lated output value	025	Q1	Accumulated value output (Accumulation within range 0 to 9999 is repeated.)	0 to 9999	0	Yes	r/w	–	–	–	2
	to	to	t			Yes					
	028	Q4	Accumulated value output (Accumulation within range 0 to 9999 is repeated.)	0 to 9999	0	Yes	r/w	–	–	–	2
Contact output	031	U1	Pulse Input Unit Restart flag Output turns 1 (ON) for 10 sec. at reset of flag.	0, 1	0	Yes	–	–	–	R	1

Individual range settings

*1:On the CX-Process Monitor, the R/W mode is indicated in the Tuning screen or in the Control screen.

ITEM TYPE	ITEM	Symbol	Data Description	Data Range	Default	COLD start initialization	R/W Mode R: Read, W: Write, R/W: R/W-enabled, -: R/W-disabled Note: r and r/w: Read and read/write for validate action or monitor run status by CX-Process Tool or Monitor, (S): Initial setting data, (O): Operation data				Data Length (bytes)
							According to CX-Process Tool	According to CX-Process Monitor *1	According to ITEM Setting block	According to Step Ladder Program	
Parameter	050*1		Y2 input range conversion (0: 0 to 10000, 1: 0 to 4000, 2: –2000 to 2000, 3: 0 to 6000, 4: –3000 to 3000, 9: Range specified at ITEM 051 and 052)	0 to 4, 9	1	–	R/W(S)	–	–	–	1
	051*1		0% value for Y2 range	±32000	0	–	R/W(S)	–	–	–	2
	052*1		100% value for Y2 range	±32000	4000	–	R/W(S)	–	–	–	2
	053*1		Y3 input range conversion (0: 0 to 10000, 1: 0 to 4000, 2: –2000 to 2000, 3: 0 to 6000, 4: –3000 to 3000, 9: Range specified at ITEM 054 and 055)	0 to 4, 9	1	–	R/W(S)	–	–	–	1
	054*1		0% value for Y3 range	±32000	0	–	R/W(S)	–	–	–	2
	055*1		100% value for Y3 range	±32000	4000	–	R/W(S)	–	–	–	2
	056*1		Y4 input range conversion (0: 0 to 10000, 1: 0 to 4000, 2: –2000 to 2000, 3: 0 to 6000, 4: –3000 to 3000, 9: Range specified at ITEM 057 and 058)	0 to 4, 9	1	–	R/W(S)	–	–	–	1
	057*1		0% value for Y4 range	±32000	0	–	R/W(S)	–	–	–	2
	058*1		100% value for Y4 range	±32000	4000	–	R/W(S)	–	–	–	2

*1: This ITEM has been added to Loop Control Unit Ver. 2.50.

Note: Q1 to Q4 accumulated values are not accumulated values output by the Pulse Input Unit; they are values that are accumulated exclusively by this function block. When a cold start is performed, these accumulated values are cleared to 0. For this reason, if the accumulated values of the Pulse Input Unit are not 0 when a cold start is performed, the Q1 to Q4 accumulated values on the Loop Control Unit will not match the accumulated values that are output by the Pulse Input Unit.

Block Model	Block Name	Block Address
<563>	AO 4-point Terminal (PMV01)	901 to 980

Outline

This function block is the Field Block for outputting four analog signals from CS-series Control Output Units (CS1W-PMV01).

Block diagram

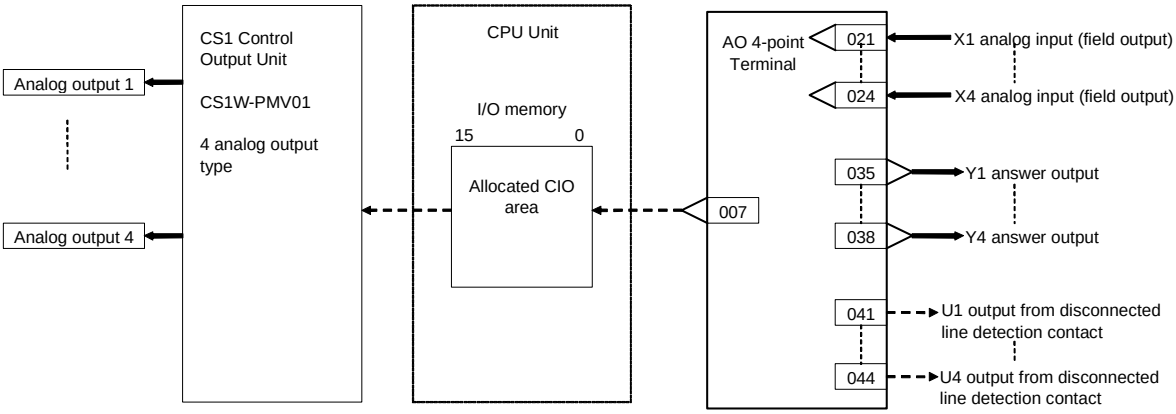

ITEM list

*1:On the CX-Process Monitor, the R/W mode is indicated in the Tuning screen or in the Control screen.

ITEM TYPE	ITEM	Symbol	Data Description	Data Range	Default	COLD start initialization	R/W Mode R: Read, W: Write, R/W: R/W-enabled, -: R/W-disabled Note: r and r/w: Read and read/write for validate action or monitor run status by CX-Process Tool or Monitor, (S): Initial setting data, (O): Operation data				Data Length (bytes)
							According to CX-Process Tool	According to CX-Process Monitor *1	According to ITEM Setting block	According to Step Ladder Program	
Contact input	000		Stop block operation command (0: Cancel stop, 1: Stop)	0, 1	0	–	–	–	–	–	1
Parameter	001		Comment	23 characters	Block name	–	R/W(S)	–	–	–	24
	002		Block Model: AO 4-point Terminal (PMV01)	563	563	–	R/W(S)	–	–	–	2
Special	003		Execution error display 0: Normal, Other: Error (See Appendix "Execution Error Code List.")		0000	–	r	–	–	–	2
Parameter	004		Operation cycle (sec) 0: Common, 1: 0.1, 2: 0.2, 3: 0.5, 4: 1, 5: 2	0 to 5	0	–	R/W(S)	–	–	–	2
	007		Unit number	0 to 95	95	–	R/W(S)	–	–	–	2
Analog input connection information	021		X1 source designation BBB: Block No., III: ITEM No.	BBBIII	000000	–	R/W(S)	–	–	–	4
	to		to			–					
	024		X4 source designation BBB: Block No., III: ITEM No.	BBBIII	000000	–	R/W(S)	–	–	–	4
Analog input (field output)	031	X1	Analog input (field output)	-20.00 to +115.00%	0.00	Yes	r	–	–	–	2
	to		to			Yes					
	034	X4	Analog input (field output)	-20.00 to +115.00%	0.00	Yes	r	–	–	–	2
Analog output (answer input)	035	Y1	Analog output (answer input)	-20.00 to +115.00%	0.00	Yes	r/w	–	–	–	2
	to		to			Yes					
	038	Y4	Analog output (answer input)	-20.00 to +115.00%	0.00	Yes	r/w	–	–	–	2
Contact output	041	U1	Output from disconnected line detection contact (0: No error, 1: Disconnected line)	0, 1	0	Yes	–	–	–	R	2
	to		to			Yes					
	044	U4	Output from disconnected line detection contact (0: No error, 1: Disconnected line)	0, 1	0	Yes	–	–	–	R	2

Block Model	Block Name	Block Address
<564>	AI 8-point Terminal (PTR01/02)	901 to 980

Outline

This function block is the Field Block for inputting eight analog signals from CS-series Power Transducer Input Units (CS1W-PTR01/02).
Either one range can be set for all points (Y1 to Y8) or a different range can be set for each point (supported from version 2.50 of the Loop Control Unit).

Block diagram

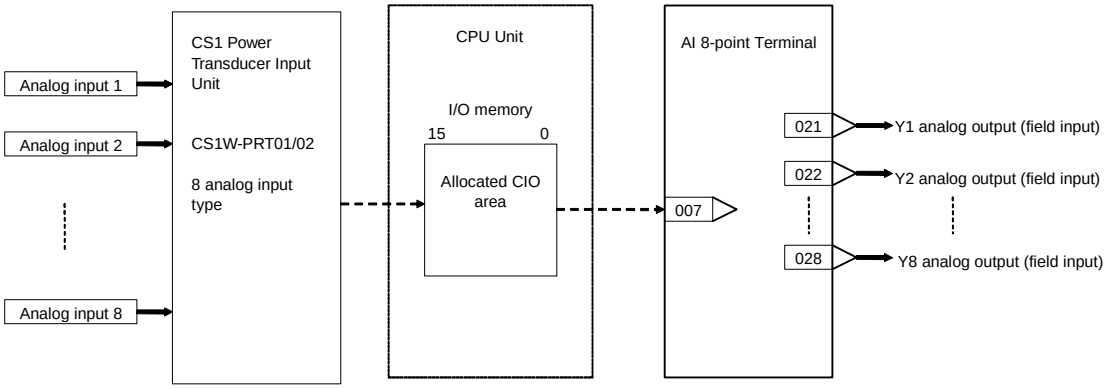

ITEM list

*1:On the CX-Process Monitor, the R/W mode is indicated in the Tuning screen or in the Control screen.

ITEM TYPE	ITEM	Symbol	Data Description	Data Range	Default	COLD start initialization	R/W Mode R: Read, W: Write, R/W: R/W-enabled, -: R/W-disabled Note: r and r/w: Read and read/write for validate action or monitor run status by CX-Process Tool or Monitor, (S): Initial setting data, (O): Operation data				Data Length (bytes)
							According to CX-Process Tool	According to CX-Process Monitor *1	According to ITEM Setting block	According to Step Ladder Program	
Contact input	000		Stop block operation command (0: Cancel stop, 1: Stop)	0, 1	0	–	–	–	–	–	1
Parameter	001		Comment	23 characters	Block name	–	R/W(S)	–	–	–	24
	002		Block Model: AI 8-point Terminal (PTR01/02/03)	564	564	–	R/W(S)	–	–	–	2
Special	003		Execution error display 0: Normal, Other: Error (See Appendix "Execution Error Code List.")		0000	–	r	–	–	–	2
Parameter	004		Operation cycle (sec) 0: Common, 1: 0.1, 2: 0.2, 3: 0.5, 4: 1, 5: 2	0 to 5	0	–	R/W(S)	–	–	–	2
Parameter	007		Unit number	0 to 95	95	–	R/W(S)	–	–	–	2
	008*1		Range conversion method 0: Common setting for all ranges, 1: Individual setting for each range	0, 1	0	–	R/W (S)	–	–	–	1
Parameter	010		Common or Y1 input range conversion (0: 0 to 10000, 1: 0 to 4000, 2: –2000 to 2000, 3: 0 to 6000, 4: –3000 to 3000, 9: Range specified at ITEM011 and ITEM012) Note: ITEM 008 determines if this parameter is for all ranges or only the Y1 input range.	0 to 4, 9	1	–	R/W(S)	–	–	–	1
	011		0% value for all ranges or Y1 range	±32000	0	–	R/W(S)	–	–	–	2
	012		100% value for all ranges or Y1 range	±32000	4000	–	R/W(S)	–	–	–	2
Analog output	021	Y1	Analog output (field input)	-15.00 to +115.00%	0.00	Yes	r/w	–	–	–	2
	to		to			Yes					
	028	Y8	Analog output (field input)	-15.00 to +115.00%	0.00	Yes	r/w	–	–	–	2

Individual range settings

*1:On the CX-Process Monitor, the R/W mode is indicated in the Tuning screen or in the Control screen.

ITEM TYPE	ITEM	Symbol	Data Description	Data Range	Default	COLD start initialization	R/W Mode R: Read, W: Write, R/W: R/W-enabled, -: R/W-disabled Note: r and r/w: Read and read/write for validate action or monitor run status by CX-Process Tool or Monitor, (S): Initial setting data, (O): Operation data				Data Length (bytes)
							According to CX-Process Tool	According to CX-Process Monitor *1	According to ITEM Setting block	According to Step Ladder Program	
Parameter	050*1		Y2 input range conversion (0: 0 to 10000, 1: 0 to 4000, 2: –2000 to 2000, 3: 0 to 6000, 4: –3000 to 3000, 9: Range specified at ITEM 051 and 052)	0 to 4, 9	1	–	R/W(S)	–	–	–	1
	051*1		0% value for Y2 range	±32000	0	–	R/W(S)	–	–	–	2
	052*1		100% value for Y2 range	±32000	4000	–	R/W(S)	–	–	–	2
	053*1		Y3 input range conversion (0: 0 to 10000, 1: 0 to 4000, 2: –2000 to 2000, 3: 0 to 6000, 4: –3000 to 3000, 9: Range specified at ITEM 054 and 055)	0 to 4, 9	1	–	R/W(S)	–	–	–	1
	054*1		0% value for Y3 range	±32000	0	–	R/W(S)	–	–	–	2
	055*1		100% value for Y3 range	±32000	4000	–	R/W(S)	–	–	–	2
	056*1		Y4 input range conversion (0: 0 to 10000, 1: 0 to 4000, 2: –2000 to 2000, 3: 0 to 6000, 4: –3000 to 3000, 9: Range specified at ITEM 057 and 058)	0 to 4, 9	1	–	R/W(S)	–	–	–	1
	057*1		0% value for Y4 range	±32000	0	–	R/W(S)	–	–	–	2
	058*1		100% value for Y4 range	±32000	4000	–	R/W(S)	–	–	–	2
	059*1		Y5 input range conversion (0: 0 to 10000, 1: 0 to 4000, 2: –2000 to 2000, 3: 0 to 6000, 4: –3000 to 3000, 9: Range specified at ITEM 060 and 061)	0 to 4, 9	1	–	R/W(S)	–	–	–	1
	060*1		0% value for Y5 range	±32000	0	–	R/W(S)	–	–	–	2
	061*1		100% value for Y5 range	±32000	4000	–	R/W(S)	–	–	–	2
	062*1		Y6 input range conversion (0: 0 to 10000, 1: 0 to 4000, 2: –2000 to 2000, 3: 0 to 6000, 4: –3000 to 3000, 9: Range specified at ITEM 063 and 064)	0 to 4, 9	1	–	R/W(S)	–	–	–	1
	063*1		0% value for Y6 range	±32000	0	–	R/W(S)	–	–	–	2
	064*1		100% value for Y6 range	±32000	4000	–	R/W(S)	–	–	–	2
	065*1		Y7 input range conversion (0: 0 to 10000, 1: 0 to 4000, 2: –2000 to 2000, 3: 0 to 6000, 4: –3000 to 3000, 9: Range specified at ITEM 066 and 067)	0 to 4, 9	1	–	R/W(S)	–	–	–	1
	066*1		0% value for Y7 range	±32000	0	–	R/W(S)	–	–	–	2
	067*1		100% value for Y7 range	±32000	4000	–	R/W(S)	–	–	–	2
	068*1		Y8 input range conversion (0: 0 to 10000, 1: 0 to 4000, 2: –2000 to 2000, 3: 0 to 6000, 4: –3000 to 3000, 9: Range specified at ITEM 069 and 070)	0 to 4, 9	1	–	R/W(S)	–	–	–	1
	069*1		0% value for Y8 range	±32000	0	–	R/W(S)	–	–	–	2
	070*1		100% value for Y8 range	±32000	4000	–	R/W(S)	–	–	–	2

*1: Supported from version 2.50 of the Loop Control Unit.

Block Model	Block Name	Block Address
<583>	AI 4-point/AO 4-point Terminal (MAD44)	901 to 980

Outline

This function block is the Field Terminal for inputting four analog signals and outputting four analog signals from the 4-point Input/4-point Output Unit (CS1W-MAD44).

Note1: Prevent the averaging, peak hold, output hold and ratio conversion functions of the Analog Input/Output Unit from duplicating the functions of the function blocks on the Loop Control Unit.
Note2: For details on how to set the Analog Input/Output Unit, see the Analog I/O Unit User's Manual (Cat. No. SBCC-820).
Note3: 000F Hex is automatically set to the 1st word (n) of the allocated relay area of CS1W-MAD44. As a result of this, the Conversion Enabled flag for each of the analog output points is always 1 (start of conversion output). For this reason, conversion output of analog output cannot be stopped, and the peak hold function of analog input cannot be used.

Block diagram

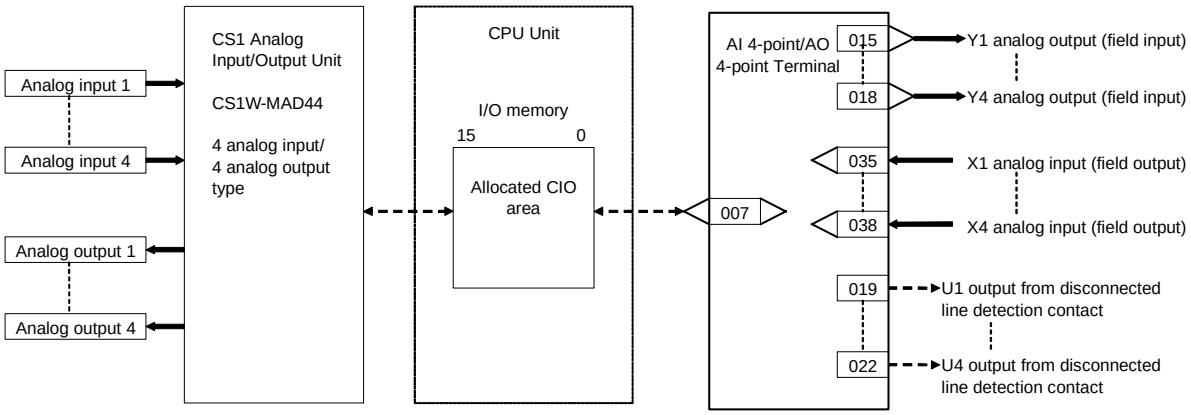

ITEM list

*1:On the CX-Process Monitor, the R/W mode is indicated in the Tuning screen or in the Control screen.

ITEM TYPE	ITEM	Symbol	Data Description	Data Range	Default	COLD start initialization	R/W Mode R: Read, W: Write, R/W: R/W-enabled, -: R/W-disabled Note: r and r/w: Read and read/write for validate action or monitor run status by CX-Process Tool or Monitor, (S): Initial setting data, (O): Operation data				Data Length (bytes)
							According to CX-Process Tool	According to CX-Process Monitor *1	According to ITEM Setting block	According to Step Ladder Program	
Contact input	000		Stop block operation command (0: Cancel stop, 1: Stop)	0, 1	0	–	–	–	–	–	1
Parameter	001		Comment	23 characters	Block name	–	R/W(S)	–	–	–	24
	002		Block Model: AI 4-point/AO 4-point Termina (MAD44)	583	583	–	R/W(S)	–	–	–	2
Special	003		Execution error display 0: Normal, Other: Error (See Appendix "Execution Error Code List.")		0000	–	r	–	–	–	2
Parameter	004		Operation cycle (sec) 0: Common, 1: 0.1, 2: 0.2, 3: 0.5, 4: 1, 5: 2	0 to 5	0	–	R/W(S)	–	–	–	2
	007		Unit number	0 to 95	95	–	R/W(S)	–	–	–	2
	011		No.1 input range (0: 1 to 5V/0 to 5V/ 0 to 10V/4 to 20mA, 1: -10 to +10V)	0, 1	0	–	R/W(S)	–	–	–	2
	to		to			–					
	014		No.4 input range (0: 1 to 5V/0 to 5V/ 0 to 10V/4 to 20mA, 1: -10 to +10V)	0, 1	0	–	R/W(S)	–	–	–	2
Analog output	015	Y1	Analog output (field input)	-5.00 to +105.00%	0.00	Yes	r/w	–	–	–	2
	to		to			Yes					
	018	Y4	Analog output (field input)	-5.00 to +105.00%	0.00	Yes	r/w	–	–	–	2
Contact output	019	U1	Output from disconnected line detection contact (0: No error, 1: Disconnected line)	0, 1	0	Yes	–	–	–	R	1
	to		to			Yes					
	022	U4	Output from disconnected line detection contact (0: No error, 1: Disconnected line)	0, 1	0	Yes	–	–	–	R	1
Parameter	031		No.1 output range (0: 1 to 5V/0 to 5V/ 0 to 10V, 1: -10 to +10V)	0, 1	0	–	R/W(S)	–	–	–	2
	to		to			–					
	034		No.1 output range (0: 1 to 5V/0 to 5V/ 0 to 10V, 1: -10 to +10V)	0, 1	0	–	R/W(S)	–	–	–	2
Analog input connection information	035		X1 source designation BBB: Block No., III: ITEM No.	BBBIII	000000	–	R/W(S)	–	–	–	4
	to		to			–					
	038		X4 source designation BBB: Block No., III: ITEM No.	BBBIII	000000	–	R/W(S)	–	–	–	4
Analog input (field output)	039	X1	Analog output (field output)	-5.00 to +105.00%	0.00	Yes	r	–	–	–	2
	to		to			Yes					
	042	X4	Analog output (field output)	-5.00 to +105.00%	0.00	Yes	r	–	–	–	2

Block Model	Block Name	Block Address
<584>	AI 8-point Terminal (AD081)	901 to 980

Outline

This function block is the Field Terminal for inputting eight analog signals from the CS-series 8-point Analog Input Unit (CS1W-AD081).

Note1: Prevent the averaging function of the Analog Input Unit from duplicating the functions of the function blocks on the Loop Control Unit.

Note2: For details on how to set the Analog Input Unit, see the Analog I/O Unit User's Manual (Cat. No. SBCC-820).

Block diagram

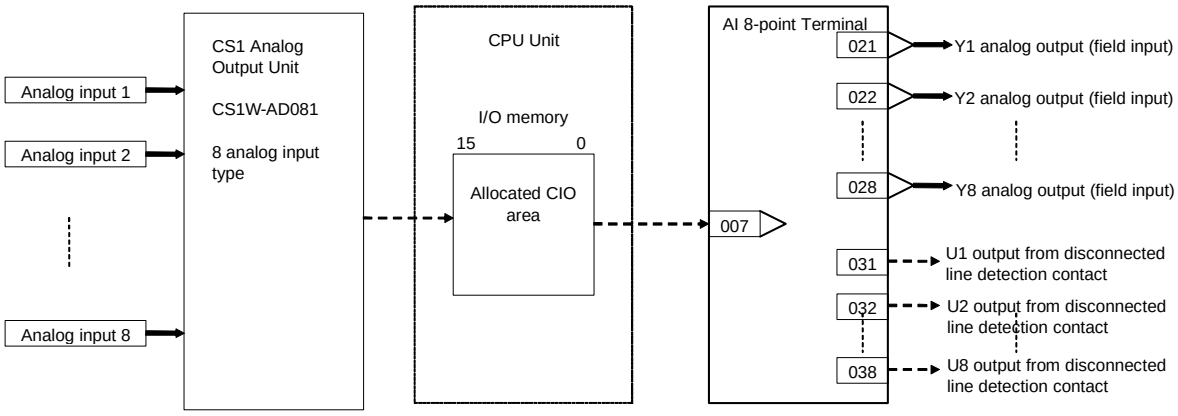

ITEM list

*1:On the CX-Process Monitor, the R/W mode is indicated in the Tuning screen or in the Control screen.

ITEM TYPE	ITEM	Symbol	Data Description	Data Range	Default	COLD start initialization	R/W Mode R: Read, W: Write, R/W: R/W-enabled, -: R/W-disabled Note: r and r/w: Read and read/write for validate action or monitor run status by CX-Process Tool or Monitor, (S): Initial setting data, (O): Operation data				Data Length (bytes)
							According to CX-Process Tool	According to CX-Process Monitor *1	According to ITEM Setting block	According to Step Ladder Program	
Contact input	000		Stop block operation command (0: Cancel stop, 1: Stop)	0, 1	0	–	–	–	–	–	1
Parameter	001		Comment	23 characters	Block name	–	R/W(S)	–	–	–	24
	002		Block Model: AI 8-point Terminal	584	584	–	R/W(S)	–	–	–	2
Special	003		Execution error display 0: Normal, Other: Error (See Appendix "Execution Error Code List.")		0000	–	r	–	–	–	2
Parameter	004		Operation cycle (sec) 0: Common, 1: 0.1, 2: 0.2, 3: 0.5, 4: 1, 5: 2	0 to 5	0	–	R/W(S)	–	–	–	2
Parameter	007		Unit number	0 to 95	95	–	R/W(S)	–	–	–	2
	011		No.1 input range (0: 1 to 5V/0 to 5V/ 0 to 10V 4 to 20mA, 1: -10 to +10V)	0, 1	0	–	R/W(S)	–	–	–	2
	to		to			–					
	018		No.8 input range (0: 1 to 5V/0 to 5V/ 0 to 10V/4 to 20mA, 1: -10 to +10V)	0, 1	0	–	R/W(S)	–	–	–	2
Analog output (field input)	021	Y1	Analog output (field input)	-5.00 to +105.00%	0.00	Yes	r/w	–	–	–	2
	to		to			Yes					
	028	Y8	Analog output (field input)	-5.00 to +105.00%	0.00	Yes	r/w	–	–	–	2
Contact output	031	U1	Output from disconnected line detection contact (0: No error, 1: Disconnected line)	0, 1	0	Yes	–	–	–	R	1
	to		to			Yes					
	038	U8	Output from disconnected line detection contact (0: No error, 1: Disconnected line)	0, 1	0	Yes	–	–	–	R	1

Block Model	Block Name	Block Address
<585>	AO 8-point Terminal (DA08V/C)	901 to 980

Outline

This function block is the Field Terminal for outputting eight analog signals from the CS-series 8-point Analog Output Units (CS1W-DA08V/DA08C).

Note1: Prevent the output hold function of the Analog Output Unit from duplicating the functions of the function blocks on the Loop Control Unit.
Note2: For details on how to set the Analog Output Unit, see the Analog I/O Unit User's Manual (Cat. No. SBCC-820).
Note3: 00FF Hex is automatically set to the 1st word (n) of the allocated relay area of CS1W-DA08V/DA08C. As a result of this, the Conversion Enabled flag for each of the analog output points is always 1 (start of conversion output). For this reason, conversion output of the Analog Output Unit cannot be stopped.

Block diagram

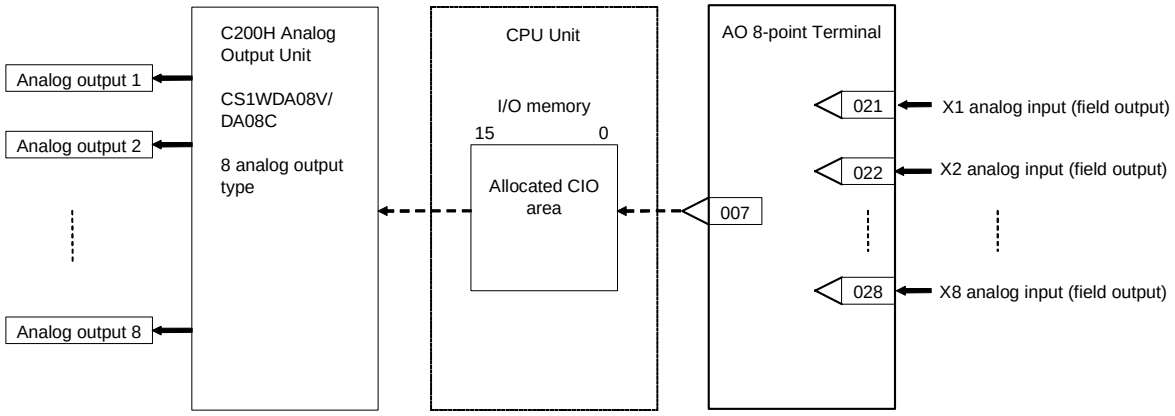

ITEM list

*1:On the CX-Process Monitor, the R/W mode is indicated in the Tuning screen or in the Control screen.

ITEM TYPE	ITEM	Symbol	Data Description	Data Range	Default	COLD start initialization	R/W Mode R: Read, W: Write, R/W: R/W-enabled, -: R/W-disabled Note: r and r/w: Read and read/write for validate action or monitor run status by CX-Process Tool or Monitor, (S): Initial setting data, (O): Operation data				Data Length (bytes)
							According to CX-Process Tool	According to CX-Process Monitor *1	According to ITEM Setting block	According to Step Ladder Program	
Contact input	000		Stop block operation command (0: Cancel stop, 1: Stop)	0, 1	0	–	–	–	–	–	1
Parameter	001		Comment	23 characters	Block name	–	R/W(S)	–	–	–	24
	002		Block Model: AO 8-point Terminal (DA08V/C)	585	585	–	R/W(S)	–	–	–	2
Special	003		Execution error display 0: Normal, Other: Error (See Appendix "Execution Error Code List.")		0000	–	r	–	–	–	2
Parameter	004		Operation cycle (sec) 0: Common, 1: 0.1, 2: 0.2, 3: 0.5, 4: 1, 5: 2	0 to 5	0	–	R/W(S)	–	–	–	2
	007		Unit number	0 to 95	95	–	R/W(S)	–	–	–	2
	011		No.1 output range (0: 1 to 5V/0 to 5V/ 0 to 10V, 1: -10 to +10V)	0, 1	0	–	R/W(S)	–	–	–	2
	to		to			–					
	018		No.8 output range (0: 1 to 5V/0 to 5V/ 0 to 10V, 1: -10 to +10V)	0, 1	0	–	R/W(S)	–	–	–	2
Analog input connection information	021		X1 source designation BBB: Block No., III: ITEM No.	BBBIII	000000	Yes	R/W(S)	–	–	–	4
	to		to			Yes					
	028		X8 source designation BBB: Block No., III: ITEM No.	BBBIII	000000	Yes	R/W(S)	–	–	–	4
Analog input (field output)	031	X1	Analog input (field output)	-5.00 to +105.00%	0.00	Yes	r	–	–	–	2
	to		to			Yes					
	038	X8	Analog input (field output)	-5.00 to +105.00%	0.00	Yes	r	–	–	–	2

Block Model	Block Name	Block Address
<586>	AI 4-point Terminal (AD041)	901 to 980

Outline

This function block is the Field Terminal block for inputting four analog signals from the CS-series 4-point Analog Input Units (CS1W-AD041).

Note1: Prevent the averaging function of the Analog Input Unit from duplicating the functions of the function blocks on the Loop Control Unit.
Note2: For details on how to set the Analog Input Unit, see the Analog I/O Unit User's Manual (Cat. No. SBCC-820).

Block diagram

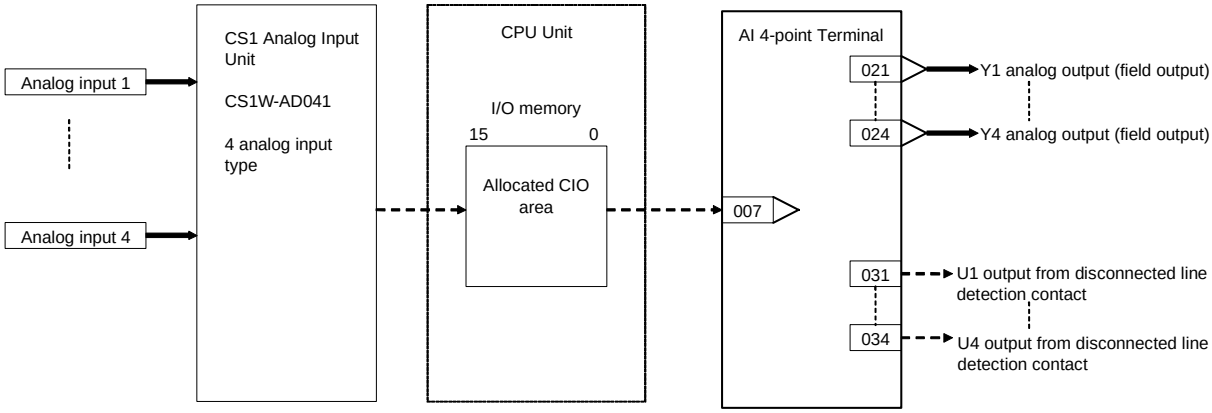

ITEM list

*1:On the CX-Process Monitor, the R/W mode is indicated in the Tuning screen or in the Control screen.

ITEM TYPE	ITEM	Symbol	Data Description	Data Range	Default	COLD start initialization	R/W Mode R: Read, W: Write, R/W: R/W-enabled, -: R/W-disabled Note: r and r/w: Read and read/write for validate action or monitor run status by CX-Process Tool or Monitor, (S): Initial setting data, (O): Operation data				Data Length (bytes)
							According to CX-Process Tool	According to CX-Process Monitor *1	According to ITEM Setting block	According to Step Ladder Program	
Contact input	000		Stop block operation command (0: Cancel stop, 1: Stop)	0, 1	0	–	–	–	–	–	1
Parameter	001		Comment	23 characters	Block name	–	R/W(S)	–	–	–	24
	002		Block Model: AI 4-point Terminal (AD041)	586	586	–	R/W(S)	–	–	–	2
Special	003		Execution error display 0: Normal, Other: Error (See Appendix "Execution Error Code List.")		0000	–	r	–	–	–	2
Parameter	004		Operation cycle (sec) 0: Common, 1: 0.1, 2: 0.2, 3: 0.5, 4: 1, 5: 2	0 to 5	0	–	R/W(S)	–	–	–	2
	007		Unit number	0 to 95	95	–	R/W(S)	–	–	–	2
	011		No.1 input range (0: 1 to 5V/0 to 5V/ 0 to 10V/4 to 20mA, 1: -10 to +10V)	0, 1	0	–	R/W(S)	–	–	–	2
	to		to			–					
	014		No.4 input range (0: 1 to 5V/0 to 5V/ 0 to 10V/4 to 20mA, 1: -10 to +10V)	0, 1	0	–	R/W(S)	–	–	–	2
Analog output (field input)	021	Y1	Analog output (field input)	-5.00 to +105.00%	0.00	Yes	r/w	–	–	–	2
	to		to			Yes					
	024	Y4	Analog output (field input)	-5.00 to +105.00%	0.00	Yes	r/w	–	–	–	2
Contact output	031	U1	Output from disconnected line detection contact (0: No error, 1: Disconnected line)	0, 1	0	Yes	–	–	–	R	1
	to		to			Yes					
	034	U4	Output from disconnected line detection contact (0: No error, 1: Disconnected line)	0, 1	0	Yes	–	–	–	R	1

Block Model	Block Name	Block Address
<587>	AO 4-point Terminal (DA041)	901 to 980

Outline

This function block is the Field Terminal for outputting four analog signals from the CS-series 4-point Analog Output Unit (C1W-DA041).

Note1: Prevent the output hold function of the Analog Output Unit from duplicating the functions of the function blocks on the Loop Control Unit.
Note2: For details on how to set the Analog Output Unit, see the Analog I/O Unit User's Manual (Cat. No. SBCC-820).
Note3: 000F Hex is automatically set to the 1st word (n) of the allocated relay area of C1W-DA041. As a result of this, the Conversion Enabled flag for each of the analog output points is always 1 (start of conversion output). For this reason, conversion output of the Analog Output Unit cannot be stopped.

Block diagram

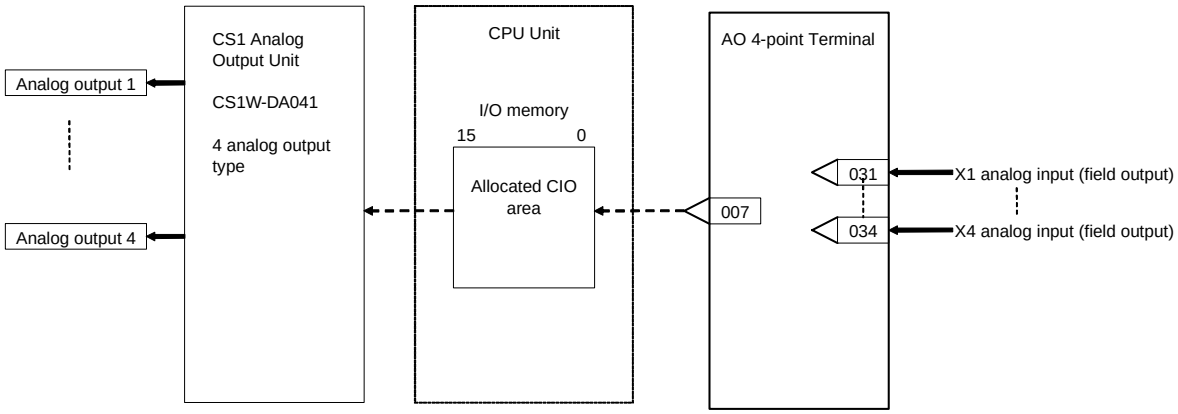

ITEM list

*1:On the CX-Process Monitor, the R/W mode is indicated in the Tuning screen or in the Control screen.

ITEM TYPE	ITEM	Symbol	Data Description	Data Range	Default	COLD start initialization	R/W Mode R: Read, W: Write, R/W: R/W-enabled, -: R/W-disabled Note: r and r/w: Read and read/write for validate action or monitor run status by CX-Process Tool or Monitor, (S): Initial setting data, (O): Operation data				Data Length (bytes)
							According to CX-Process Tool	According to CX-Process Monitor *1	According to ITEM Setting block	According to Step Ladder Program	
Contact input	000		Stop block operation command (0: Cancel stop, 1: Stop)	0, 1	0	–	–	–	–	–	1
Parameter	001		Comment	23 characters	Block name	–	R/W(S)	–	–	–	24
	002		Block Model: AO 4-point Terminal (DA041)	587	587	–	R/W(S)	–	–	–	2
Special	003		Execution error display 0: Normal, Other: Error (See Appendix "Execution Error Code List.")		0000	–	r	–	–	–	2
Parameter	004		Operation cycle (sec) 0: Common, 1: 0.1, 2: 0.2, 3: 0.5, 4: 1, 5: 2	0 to 5	0	–	R/W(S)	–	–	–	2
	007		Unit number	0 to 95	95	–	R/W(S)	–	–	–	2
	011		No.1 output range (0: 1 to 5V/0 to 5V/ 0 to 10V, 1: -10 to +10V)	0, 1	0	–	R/W(S)	–	–	–	2
	to		to			–					
	014		No.4 output range (0: 1 to 5V/0 to 5V/ 0 to 10V, 1: -10 to +10V)	0, 1	0	–	R/W(S)	–	–	–	2
Analog input connection information	021	U1	X1 source designation BBB: Block No., III: ITEM No.	BBBIII	000000	–	R/W(S)	–	–	–	4
	to		to			–					
	024	U4	X4 source designation BBB: Block No., III: ITEM No.	BBBIII	000000	–	R/W(S)	–	–	–	4
Analog input (field output)	031	X1	Analog input (field output)	-5.00 to +105.00%	0.00	Yes	r	–	–	–	2
	to		to			Yes					
	034	X4	Analog input (field output)	-5.00 to +105.00%	0.00	Yes	r	–	–	–	2

Block Model	Block Name	Block Address
<588>	AI 4-point Terminal (DRT1-AD04)	901 to 980

Outline

This function block is the Field Terminal block for a DRT1-AD04 DeviceNet Analog Input Unit. It enables directly inputting from the ladder program in the Loop Control Unit values input to the DRT1-AD04 without conversion (MSB (15) is the sign bit).

Note: Use an AI Terminal from CPU Unit or Expanded AI Terminal from CPU Unit Block for the DRT1-AD04H and other DeviceNet Analog Output Terminals except the DRT1-AD04.

Block diagram

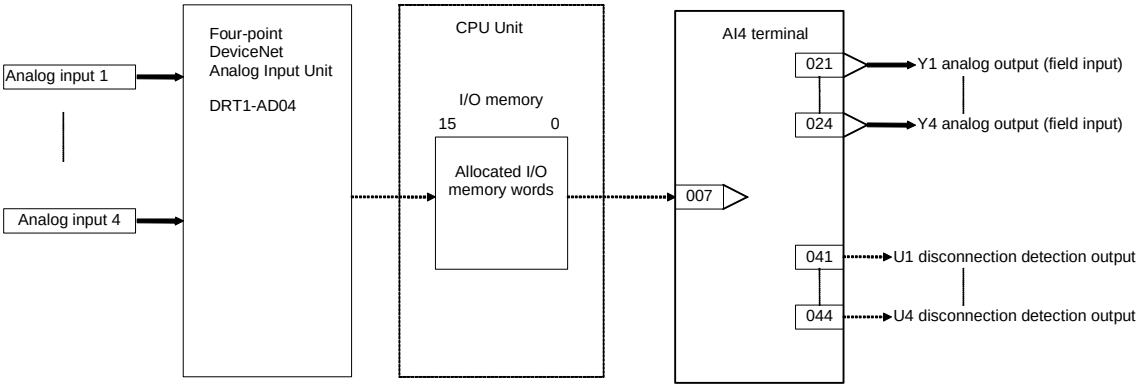

ITEM list

*1:On the CX-Process Monitor, the R/W mode is indicated in the Tuning screen or in the Control screen.

ITEM TYPE	ITEM	Symbol	Data Description	Data Range	Default	COLD start initialization	R/W Mode R: Read, W: Write, R/W: R/W-enabled, -: R/W-disabled Note: r and r/w: Read and read/write for validate action or monitor run status by CX-Process Tool or Monitor, (S): Initial setting data, (O): Operation data				Data Length (bytes)
							According to CX-Process Tool	According to CX-Process Monitor *1	According to ITEM Setting block	According to Step Ladder Program	
Contact input	000		Stop block operation command (0: Cancel stop, 1: Stop)	0, 1	0	–	–	–	–	–	1
Parameter	001		Comment	23 characters	Block name	–	R/W(S)	–	–	–	24
	002		Block Model:Ai 4-point Terminal (DRT1-AD04)	587	587	–	R/W(S)	–	–	–	2
Special	003		Execution error display 0: Normal, Other: Error (See Appendix "Execution Error Code List.")		0000	–	r	–	–	–	2
Parameters	004		Operation cycle (sec) 0: Common, 1: 0.1, 2: 0.2, 3: 0.5, 4: 1, 5: 2	0 to 5	0	–	R/W(S)	–	–	–	2
	007		CPU Unit I/O memory area type 0: CIO (Channel I/O) Area, 1: W (Work Area), 2: H (Holding Area), 3: D (Data Memory), 4: E0 (Extended Data Memory [E] bank No.)	0 to 4	3	–	R/W(S)	–	–	–	1
	008		Leading Address	0 to 32767	32767	–	R/W(S)	–	–	–	2
	011		No. 1 input range (: 1 to 5 V/0 to 5 V/ 0 to 10 V/4 to 20 mA/0 to 20 mA, 1: -10 to 10 V)	0, 1	0	–	R/W(S)	–	–	–	2
	to		to			–					
	014		No. 4 input range (: 1 to 5 V/0 to 5 V/ 0 to 10 V/4 to 20 mA/0 to 20 mA, 1: -10 to 10 V)	0, 1	0	–	R/W(S)	–	–	–	2
Analog output values (field inputs)	021	Y1	Analog output value (field input)	-5.00 to +105.00%	0.00	Yes	r/w	–	–	–	2
	to		to			Yes					
	024	Y4	Analog output value (field input)	-5.00 to +105.00%	0.00	Yes	r/w	–	–	–	2
Contact output	031	U1	Output from disconnected line detection contact (0: No error, 1: Disconnected line)	0, 1	0	Yes	–	–	–	R	1
	to		to			Yes					
	034	U4	Output from disconnected line detection contact (0: No error, 1: Disconnected line)	0, 1	0	Yes	–	–	–	R	1

Block Model	Block Name	Block Address
<589>	AO 2-point Terminal (DRT1-DA02)	901 to 980

Outline

This function block is the Field Terminal block for a DRT1-DA02 DeviceNet Analog Output Unit. It enables directly outputting from the ladder program in the Loop Control Unit values to be output from the DRT1-DA02 without conversion (MSB (15) is the sign bit).

Note: Use an AO Terminal to CPU Unit or Expanded AO Terminal to CPU Unit Block for DeviceNet Analog Output Terminals other than DRT1-DA02.

Block diagram

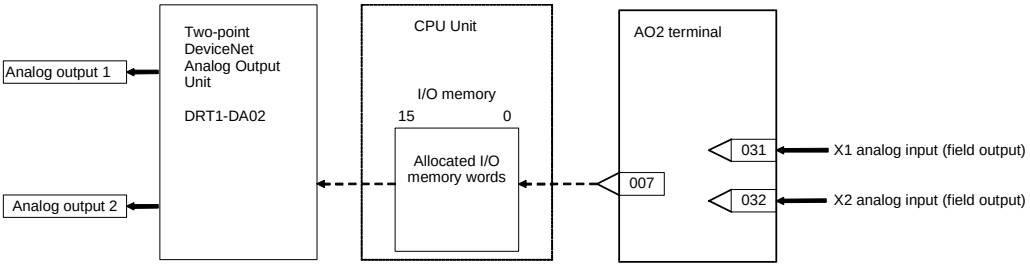

ITEM list

*1:On the CX-Process Monitor, the R/W mode is indicated in the Tuning screen or in the Control screen.

ITEM TYPE	ITEM	Symbol	Data Description	Data Range	Default	COLD start initialization	R/W Mode R: Read, W: Write, R/W: R/W-enabled, -: R/W-disabled Note: r and r/w: Read and read/write for validate action or monitor run status by CX-Process Tool or Monitor, (S): Initial setting data, (O): Operation data				Data Length (bytes)
							According to CX-Process Tool	According to CX-Process Monitor *1	According to ITEM Setting block	According to Step Ladder Program	
Contact input	000		Stop block operation command (0: Cancel stop, 1: Stop)	0, 1	0	–	–	–	–	–	1
Parameter	001		Comment	23 characters	Block name	–	R/W(S)	–	–	–	24
	002		Block Model: Ao 2-point Terminal (DRT1-DA02)	589	589	–	R/W(S)	–	–	–	2
Special	003		Execution error display 0: Normal, Other: Error (See Appendix "Execution Error Code List.")		0000	–	r	–	–	–	2
Parameters	004		Operation cycle (sec) 0: Common, 1: 0.1, 2: 0.2, 3: 0.5, 4: 1, 5: 2	0 to 5	0	–	R/W(S)	–	–	–	2
	007		CPU Unit I/O memory area type 0: CIO (Channel I/O) Area, 1: W (Work Area), 2: H (Holding Area), 3: D (Data Memory), 4: E0 (Extended Data Memory [E] bank No.)	0 to 4	3	–	R/W(S)	–	–	–	1
	008		Leading address	0 to 32767	32767	–	R/W(S)	–	–	–	2
	011		No. 1 output range (0: 1 to 5 V/0 to 10 V /4 to 20 mA/0 to 20 mA, 1: -10 to +10 V)	0, 1	0	–	R/W(S)	–	–	–	2
	012		No. 2 output range (0: 1 to 5 V/0 to 10 V /4 to 20 mA/0 to 20 mA, 1: -10 to +10 V)	0, 1	0	–	R/W(S)	–	–	–	2
Analog input connection information	021		X1 source designation BBB: Block No., III: ITEM No.	BBBIII	000000	–	R/W(S)	–	–	–	4
	022		X2 source designation BBB: Block No., III: ITEM No.	BBBIII	000000	–	R/W(S)	–	–	–	4
Analog input values (field ouptuts values)	031	X1	Analog input value (field output value)	-5.00 to +105.00%	0.00	Yes	r	–	–	–	2
	032	X2	Analog input value (field output value)	-5.00 to +105.00%	0.00	Yes	r	–	–	—	2

Appendix A
Execution Error Code List

- The execution error codes shown in the list below are stored in ITEM003 of each function block.
- When there are function blocks containing an error other than 0 (normal), the smallest block number in these function block numbers is stored to ITEM093 of the System Common block (Block Model 000).
- The following information can be checked in the Monitor Run Status screen on CX-Process Tool ([Execute]-[Run]-[Validate Action]):
  - Smallest block address where execution error occurred (ITEM093 of System Common block)
  - Execution error codes that occurred at each function block address (smallest code No. when multiple execution errors occur at a single function block) in the Detailed display screen

Code	Description	Explanation	Operation at Error	Remedy
0	Normal			
1	Connection terminal/output terminal connection not defined	Either the function block is not registered to the block address of the source designation or the destination, or the ITEM number does not exist.	Running of the function block in question is stopped, and the functions in question do not operate normally.	Check the block address and ITEM number of the source designation or destination designation.
2	Default error	When run/stop command S1 turned ON in the ramp program or segment program, the reference input was outside the rise ramp range.	The program is not started.	Check the connection of the reference input and program settings.
10	Operation process: Division by "0"	An attempt was made to execute division by a "0" denominator in the operation process.	In the case of Multiplication, DI/AI Terminal from CPU Unit, Expanded DI/AI Terminal from CPU Unit or Field Terminal blocks, the maximum value is output. In the case of the Segment Linearizer or Temperature and Pressure Correction blocks, the previous data is retained.	In the case of DI/AI Terminal from CPU Unit, Expanded DI/AI Terminal from CPU Unit or Field Terminal blocks, check the scaling value, and in the case of the Segment Linearizer block, check the setting value of the input coordinate side. In the case of temperature and pressure correction, check the gain bias value.
		An attempt was made to execute division by a "0" denominator in Arithmetic Operation block (Block Model 126).	Execution of the Arithmetic Operation block will be stopped.	Check the contents of the conditional statement and calculation expressions for division by 0.
11	Operation process: Operation out of restricted value	The output value of the operation result exceeded the data length of two bytes. Note: An error does not occur even if the output range (±320.00, e.g) is exceeded if the data length of two bytes is not exceeded.	Output becomes the maximum value or minimum value of the output range. (For example, when the output range is ±320.00, the output becomes +320.00 or 320.00.)	If there is a problem, review the settings of related ITEMs.
		The arguments or results for a Arithmetic Operation block exceed the defined limits.	Execution of the Arithmetic Operation block will be stopped.	Check the contents of the conditional statement and calculation expressions and correct the mistake.
12	Argument beyond definition	An argument used in Arithmetic Operation (Block Model 126) is beyond the definition.	Execution of the Arithmetic Operation block will be stopped.	Check the range of the arguments and correct the conditional statement or calculation expressions.

Code	Description	Explanation	Operation at Error	Remedy
15	AT error	A limit cycle cannot be generated for Basic PID (Block Model 011) or Advanced PID (Block Model 012) or suitable PID constants cannot be calculated.	Execution of the relevant block will be stopped.	Check the following AT parameters: ITEM 036 to ITEM 040. Also, set ITEM 051 to 2 s or less.
19	Inappropriate operation	Two or more S1 to S3 select switches are set to 1 (ON) at the same time in the 3-output Selector block (Block Model 163) or 3-input Selector block (Block Model 164).	The output value that was active before the error occurred is held.	Re-program the Step Ladder Program block so that S1 to S3 select switches are set to 1 (ON) independent of each other.
		There is a syntax error in Arithmetic Operation (Block Model 126), the THEN or ELSE expression is not defined, or the output reverse scaling limits are not set.	Execution of the Arithmetic Operation block will be stopped.	Check the contents of the conditional statement and calculation expressions and check the settings of the output reverse scaling limits.
		There is a syntax error in a Fuzzy Logic block (Block Model 016) that prevents operation. 1) There is not one sign character and 5 numeric characters maximum (e.g., a + sign is specified). 2) Values are not separated by colons. 3) The values that are set are not sufficient. 4) More than two inflection points in membership functions are the same. 5) Inflection points in membership functions do not increase to the right. 6) A membership function (NL, NS, ZR, PS, or PL) used in a rule has not been defined.	Fuzzy logic block will be stopped.	Check the membership functions and rules. The number of the ITEM causing the problem will be provided in ITEM 006 (operation error details).
20	Download terminal data exchange error	Data exchange with the CPU Unit is not being executed correctly on the CPU Unit Terminal, Expanded CPU Unit Terminal, Node Terminals and Field Terminal blocks.	The data of the function block in question is not updated.	If a malfunction has occurred on the CPU Unit, follow the remedy for that error. If the CPU Unit is normal, turn ON the power supply again.
21	I/O memory address out-of-range	An address out of the I/O memory address range has been specified on the CPU Unit Terminal, Expanded CPU Unit Terminal, Node Terminals and Field Terminal blocks.	Operation of the function block in question is stopped.	On the CPU Unit Terminal and Expanded CPU Unit Terminal blocks, check the leading address, and on field terminals check the setting of the CIO (channel I/O) Area number setting. In the case of Node Terminals, check the setting of the "leading address of the memory for the node terminals" specified by System Common block ITEM043.

Code	Description	Explanation	Operation at Error	Remedy
29	Reception error for external device	A communications frame error was generated by the data received from an ES100X Controller for an ES100X Controller Terminal (Block Model 045). (An FCS check error or frame error occured 3 times in a row.	Communications will be stopped with the specified ES100X and tried with another ES100X.	Check the communications path and the communications settings (7 data bits, even parity, and 2 stop bits).
30	Response timeout	A response was not returned after sended data to the Controller for a ES100X Controller Terminal (Block Model 045). (Reponse was not returned for 5 s 3 times.)	Communications will be stopped with the specified ES100X and tried with another ES100X.	Check the communications path, the communications settings (7 data bits, even parity, and 2 stop bits), and other required settings in the ES100X (parameter setting mode, unit number, etc.).
31	Controller unit number duplicated	The unit number set in ITEM 006 for a ES100X Controller Terminal (Block Model 045) is the same as another ES100X Controller Terminal. (A reponse timeout will occur if the unit number does not exist.)	Communications will be stopped with the ES100X Controllers.	Change the unit number settings (ITEM 006)so that each is used only once.
70	Illegal combination of function blocks	The function block on the primary loop side is not basic PID or advanced PID when bumpless processing between primary/secondary loops was specified in basic PID or advanced PID.	Running of the function block in question is stopped.	Check the function block model number on the primary loop side.
71	Inappropriate parameter	a) When restricted conditions are applied across two ITEMs: (Example: when the unit pulse output is equal to or greater than the operation cycle when there is unit pulse output in run time accumulation) b) An attempt has been made to write out-of-range data at the ITEM Setting block.	a) The function block in question is not executed. b) Data cannot be written.	Check the settings of the ITEMs.
80	Step Ladder Program command error	There is an irrelevant command in the Step Ladder Program, or the method of use of commands is wrong, for example, there is an AND command even though there is no input command.	The command in question and onwards are not executed.	Check the program within the Step Ladder Program block.
81	Step Ladder Program source designation not defined	Either the function block is not registered to the block address currently specified by each command in the Step Ladder Program, or the ITEM number does not exist.	The command in question and onwards are not executed.	Check the block address and ITEM number.
89	Overuse of Step Ladder Program differentiated instruction	The number of differentiated instructions to be simultaneously executed has exceeded 256.	Differentiated instructions exceeding 256 instructions are not executed.	Reduce the number of differentiated instructions to be executed simultaneously.

Appendix B
ITEM Allocations for Send/Receive All Blocks

- The following tables list the word allocations for ITEMs transferred by Send All Blocks (Block Model: 462) and Receive All Blocks (Block Model: 461).
- Each function block is allocated 20 words.
- The left column in each table gives the offset in words from the first word. Offsets +0 to +17 are analog data and offsets +18 and +19 are bit data.

Block Model 001: 2-position ON/OFF

Offset (words)	ITEM	Tag ITEM	Data name	Send/ Receive
+0 (first word)	007	PV	PV input	S
+1	029	SP	Current Set Point output	S
	023	SP	Local Set Point setting	R
+3	008	HH_SP	High/high alarm setting	S/R
+4	009	H_SP	High alarm setting	S/R
+5	010	L_SP	Low alarm setting	S/R
+6	011	LL_SP	Low/low alarm setting	S/R
+7	041	DVA_SP	Deviation alarm setting	S/R
+15	003	ERR	Execution error display	S
+17	099	OP_MK	Label	S/R
+18, bit 00	026	R/L_SW	Remote/Local switch	S/R
+18, bit 01	086	A/M_SW	Auto/Manual switch	S/R
+18, bit 02	017	AOF	Alarm stop switch	S/R
+18, bit 03	024	CAS_SET	Set Point setting mode	S/R
+18, bit 08	093	MV	Host display of MV	S/R
+18, bit 15	000	MT_ST	Stop block operation command	S/R
+19, bit 00	013	HH	High/high alarm output	S
+19, bit 01	014	H	High alarm output	S
+19, bit 02	015	L	Low/low alarm output	S
+19, bit 03	016	LL	Low alarm output	S
+19, bit 04	042	DVA	Deviation alarm output	S
+19, bit 05	019	PV_ABN	PV error display	S

Block Model 002: System 3-position ON/OFF

Offset (words)	ITEM	Tag ITEM	Data name	Send/ Receive
+0 (first word)	007	PV	PV input	S
+1	029	SP	Current Set Point output	S
	023	SP	Local Set Point setting	R
+3	008	HH_SP	High/high alarm setting	S/R
+4	009	H_SP	High alarm setting	S/R
+5	010	L_SP	Low/low alarm setting	S/R
+6	011	LL_SP	Low/low alarm setting	S/R
+7	041	DVA_SP	Deviation alarm setting	S/R
+15	003	ERR	Execution error display	S
+17	099	OP_MK	Label	S/R
+18, bit 00	026	R/L_SW	Remote/Local switch	S/R
+18, bit 01	086	A/M_SW	Auto/Manual switch	S/R
+18, bit 02	017	AOF	Alarm stop switch	S/R
+18, bit 03	024	CAS_SET	Set Point setting mode	S/R
+18, bit 08	093	MVH	Host display of MVH	S/R
+18, bit 09	095	MVL	Host display of MVL	S/R
+18, bit 15	000	MT_ST	Stop block operation command	S/R
+19, bit 00	013	HH	High/high alarm output	S
+19, bit 01	014	H	High alarm output	S
+19, bit 02	015	L	Low alarm output	S
+19, bit 03	016	LL	Low/low alarm output	S
+19, bit 04	042	DVA	Deviation alarm output	S
+19, bit 05	019	PV_ABN	PV error display 0: Normal, 1: Error → MANUAL mode	S

Block Model 011: Basic PID

Offset (words)	ITEM	Tag ITEM	Data name	Send/ Receive
+0 (first word)	007	PV	PV input	S
+1	029	SP	Current Set Point output	S
	023	SP	Local Set Point setting	R
+2	089	MV	Host display of MV	S/R
+3	008	HH_SP	High/high alarm setting	S/R
+4	009	H_SP	High alarm setting	S/R
+5	010	L_SP	Low alarm setting	S/R
+6	011	LL_SP	Low/low alarm setting	S/R
+7	041	DVA_SP	Deviation alarm setting	S/R
+8	044	DV	Deviation output	S
+9	054	P	Proportional band	S/R
+10	055	I	Integral time	S/R
+11	056	D	Differential time	S/R
+12	076	MH_LMT	High MV limit	S/R
+13	077	ML_LMT	Low MV limit	S/R
+15	003	ERR	Execution error display	S
+16	098	MV_IDX	MV index position	S/R
+17	099	OP_MK	Label	S/R
+18, bit 00	026	R/L_SW	Remote/Local switch	S/R
+18, bit 01	086	A/M_SW	Auto/Manual switch	S/R
+18, bit 02	017	AOF	Alarm stop switch	S/R
+18, bit 03	024	CAS_SET	Set Point setting mode	S/R
+18, bit 14	035	AT	AT command/AT Executing	S/R
+18, bit 15	000	MT_ST	Stop block operation command	S/R
+19, bit 00	013	HH	High/high alarm output	S
+19, bit 01	014	H	High alarm output	S
+19, bit 02	015	L	Low alarm output	S
+19, bit 03	016	LL	Low/low alarm output	S
+19, bit 04	042	DVA	Deviation alarm output	S
+19, bit 05	019	PV_ABN	PV execution error display	S
+19, bit 06	091	MV_ABN	MV error display	S
+19, bit 07	078	MHA	MV upper limit output	S
+19, bit 08	079	MLA	MV lower limit output	S

Block Model 012: Advanced PID

Offset (words)	ITEM	Tag ITEM	Data name	Send/ Receive
+0 (first word)	007	PV	PV input	S
+1	029	SP	Current SP output	S
	023	SP	Local Set Point setting	R
+2	089	MV	Host display of MV	S/R
+3	008	HH_SP	High/high alarm setting	S/R
+4	009	H_SP	High alarm setting	S/R
+5	010	L_SP	Low alarm setting	S/R
+6	011	LL_SP	Low/low alarm setting	S/R
+7	041	DVA_SP	Deviation alarm setting	S/R
+8	044	DV	Deviation output	S
+9	054	P	Proportional band	S/R
+10	055	I	Integral	S/R
+11	056	D	Differential time	S/R
+12	076	MH_LMT	High MV limit	S/R
+13	077	ML_LMT	Low MV limit	S/R
+14	057	MRT	Manaul reset	S/R
+15	003	ERR	Execution error display	S
+16	098	MV_IDX	MV index position	S/R
+17	099	OP_MK	Label	S/R
+18, bit 00	026	R/L_SW	Remote/Local switch	S/R
+18, bit 01	086	A/M_SW	Auto/Manual switch	S/R
+18, bit 02	017	AOF	Alarm stop switch	S/R
+18, bit 03	024	CAS_SET	Set Point setting mode	S/R
+18, bit 04	027	S2	PV tracking switch	S/R
+18, bit 05	046	S3	PV compensation ON/OFF switch	S/R
+18, bit 06	059	S4	Input of accumulator stop switch	S/R
+18, bit 07	073	S5	MV compensation ON/OFF switch	S/R
+18, bit 08	080	S6	Preset MV switch	S/R
+18, bit 09	082	S7	MV hold switch	S/R
+18, bit 10	085	S8	MV tracking switch	S/R
+18, bit 14	035	AT	AT command/AT Executing	S/R
+18, bit 15	000	MT_ST	Stop block operation command	S/R
+19, bit 00	013	HH	High/high alarm output	S
+19, bit 01	014	H	High alarm output	S
+19, bit 02	015	L	Low alarm output	S
+19, bit 03	016	LL	Low/low alarm output	S
+19, bit 04	042	DVA	Deviation alarm output	S
+19, bit 05	019	PV_ABN	PV execution error display	S
+19, bit 06	091	MV_ABN	MV error display	S
+19, bit 07	078	MHA	High MV limit arrival output	S
+19, bit 08	079	MLA	Low MV limit arrival output	S

Block Model 013: Blended PID

Offset (words)	ITEM	Tag ITEM	Data name	Send/ Receive
+0 (first word)	007	P1	Input	S
+1	029	**Y2**	Current SP instantaneous value output	S
+2	089	MV	Host display of MV	S/R
+3	012	Q1	Accumulated value (lower 4 digits)	S
+4	013	Q2	Accumulated value (upper 4 digits)	S
+5	016	Y1	Instantaneous value output	S
+6	027	K1	Ratio	S/R
+7	044	DEV_Q	Cumulative deviation output	S
+9	054	P	Proportional band	S/R
+10	055	I	Integral time	S/R
+11	056	D	Differential time	S/R
+12	076	MH_LMT	High MV limit	S/R
+13	077	ML_LMT	Low MV limit	S/R
+15	003	ERR	Execution error display	S
+16	098	MV_IDX	MV index position	S/R
+17	099	OP_MK	Label	S/R
+18, bit 01	086	A/M_SW	Auto/Manual switch	S/R
+18, bit 02	017	AOF	Alarm stop switch	S/R
+18, bit 08	014	S1	Accumulation counter reset switch (1: Reset)	S/R
+18, bit 09	043	S2	Cumulative deviation reset switch	S/R
+18, bit 15	000	MT_ST	Stop block operation command (0: Cancel stop, 1: Stop)	S/R
+19, bit 00	036	DHH	Cumulative deviation High/high alarm output	S
+19, bit 01	037	DH	Cumulative deviation High alarm output	S
+19, bit 02	038	DL	Cumulative deviation Low alarm output	S
+19, bit 03	039	DLL	Cumulative deviation Low/low alarm output	S
+19, bit 06	091	MV_ABN	MV error display 0: Normal, 1: Error	S
+19, bit 07	078	MHA	High MV limit arrival (1: Limit or more)	S
+19, bit 08	079	MLA	Low MV limit arrival (1: Limit or less)	S

Block Model 014: Batch Flowrate Capture

Offset (words)	ITEM	Tag ITEM	Data name	Send/ Receive
+0 (first word)	007	P1	Input	S
+1	029	SP	Current SP output (lower 4 digits)	S
	023	SP	Local SP setting (lower 4 digits)	R
+2	089	MV	Host display of MV	S/R
+3	030	SPU	Current SP output (upper 4 digits)	S
	024	SPU-W	Local SP setting (upper 4 digits)	R
+4	035	SM	Batch accumulated value (lower 4 digits) Fixed value	S
+5	032	B0	Overrun setting (value subtracted from BM)	S/R
+6	033	BP	Pre-batch setting (value subtracted from BM)	S/R
+7	034	B1	Flowrate limitation	S/R
+8	061	BMU	Preset value (upper 4 digits) (current SP is entered)	S
+9	065	SMU	Batch accumulated value (upper 4 digits)	S
+10	012	Q1	Accumulated value (lower 4 digits)	S
+11	013	Q2	Accumulated value (upper 4 digits)	S
+12	016	Y1	Instantaneous value output	S
+13	017	PR	Pulse rate (for host display: scale unit/pulse)	S/R
+14	031	BM	Preset value (lower 4 digits) (current SP is entered)	S
+15	003	ERR	Execution error display	S
+16	098	MV_IDX	MV index position	S/R
+17	099	OP_MK	Label	S/R
+18, bit 00	026	R/L_SW	Remote/Local switching	S/R
+18, bit 01	086	A/M_SW	Auto/Manual switch	S/R
+18, bit 08	036	S1	Run/stop command	S/R
+18, bit 09	037	S2	Control interrupt switch	S/R
+18, bit 10	014	S3	Accumulation counter reset	S/R
+18, bit 15	000	MT_ST	Stop block operation	S/R
+19, bit 00	038	U1	Main batch output	S
+19, bit 01	039	U2	Pre-batch output	S
+19, bit 06	091	MV_ABN	MV error display	S

Block Model 016: Fuzzy Logic

Offset (words)	ITEM	Tag ITEM	Data name	Send/ Receive
+0 (first word)	015	X1	X1 input value	S
+1	016	X2	X2 input value	S
+2	017	X3	X3 input value	S
+3	018	X4	X4 input value	S
+4	019	X5	X5 input value	S
+5	020	X6	X6 input value	S
+6	021	X7	X7 input value	S
+7	022	X8	X8 input value	S
+8	027	A1	Fixed value for output 1 when rules are not fulfilled	S/R
+9	028	A2	Fixed value for output 2 when rules are not fulfilled	S/R
+10	035	FN	Read rule numbers for fulfilled rules	S/R
+11	036	FT	Applicability for each rule	S
+12	031	Y1	Y1 output value	S
+13	032	Y2	Y2 output value	S
+15	003	ERR	Execution error display	S
+18, bit 00	023	S1	Output value selection switch for output 2 when rules are not fulfilled	S/R
+18, bit 01	024	S2	Output value selection switch for output 2 when rules are not fulfilled	S/R
+18, bit 15	000	MT_ST	Stop block operation command	S/R

Block Model 031: Indication and Setting

Offset (words)	ITEM	Tag ITEM	Data name	Send/ Receive
+0 (first word)	007	PV	PV input	S
+1	029	SP	Current SP setting	S
	023	SP	Local Set Point setting	R
+3	008	HH_SP	High/high alarm setting	S/R
+4	009	H_SP	High alarm setting	S/R
+5	010	L_SP	Low alarm setting	S/R
+6	011	LL_SP	Low/low alarm setting	S/R
+15	003	ERR	Execution error display	S
+17	099	OP_MK	Label	S/R
+18, bit 00	026	R/L_SW	Remote/Local switch	S/R
+18, bit 02	017	AOF	Alarm stop switch	S/R
+18, bit 03	024	CAS_SET	SP setting mode (default)	S/R
+18, bit 15	000	MT_ST	Stop block operation command	S/R
+19, bit 00	013	HH	High/high alarm output	S
+19, bit 01	014	H	High alarm output	S
+19, bit 02	015	L	Low/low alarm output	S
+19, bit 03	016	LL	Low alarm output	S
+19, bit 05	019	PV_ABN	PV error display	S

Block Model 032: Indication and Operation

Offset (words)	ITEM	Tag ITEM	Data name	Send/ Receive
+0 (first word)	007	PV	PV input	S
+1	084	X1	Auto input	S
+2	089	MV	Host display of MV	S/R
+3	008	HH_SP	High/high alarm setting	S/R
+4	009	H_SP	High alarm setting	S/R
+5	010	L_SP	Low alarm setting	S/R
+6	011	LL_SP	Low/low alarm setting	S/R
+12	076	MH_LMT	High MV limit	S/R
+13	077	ML_LMT	Low MV limit	S/R
+15	003	ERR	Execution error display	S
+16	098	MV_IDX	MV index position	S/R
+17	099	OP_MK	Label	S/R
+18, bit 01	086	A/M_SW	Auto/Manual switch	S/R
+18, bit 02	017	AOF	Alarm stop switch	S/R
+18, bit 15	000	MT_ST	Stop block operation command	S/R
+19, bit 00	013	HH	High/high alarm output	S
+19, bit 01	014	H	High alarm output	S
+19, bit 02	015	L	Low alarm output	S
+19, bit 03	016	LL	Low/low alarm output	S
+19, bit 05	019	PV_ABN	PV error display	S
+19, bit 06	091	MV_ABN	MV error display	S
+19, bit 07	078	MHA	MV upper limit output	S
+19, bit 08	079	MLA	MV lower limit output	S

Block Model 033: Ratio Setting

Offset (words)	ITEM	Tag ITEM	Data name	Send/ Receive
+0 (first word)	007	PV	Reference input	S
+1	029	SP	Current SP output	S
	023	SP	Local ratio setting	R
+2	089	MV	Host display of MV	S/R
+9	054	K1	Ratio range	S/R
+10	055	A1	Input bias	S/R
+11	056	B1	Output bias	S/R
+12	076	MH_LMT	High MV limit	S/R
+13	077	ML_LMT	Low MV limit	S/R
+15	003	ERR	Execution error display	S
+16	098	MV_IDX	MV index position	S/R
+17	099	OP_MK	Label	S/R
+18, bit 00	026	R/L_SW	Remote/Local switch	S/R
+18, bit 01	086	A/M_SW	Auto/Manual switch	S/R
+18, bit 03	024	CAS_SET	Ratio setting mode (default)	S/R
+18, bit 15	000	MT_ST	Stop block operation command	S/R
+19, bit 05	019	PV_ABN	PV error display	S
+19, bit 06	091	MV_ABN	MV error display	S
+19, bit 07	078	MHA	MV upper limit output	S
+19, bit 08	079	MLA	MV lower limit output	S

Block Model 034: Indicator

Offset (words)	ITEM	Tag ITEM	Data name	Send/ Receive
+0 (first word)	007	PV	PV input	S
+3	008	HH_SP	High/high alarm setting	S/R
+4	009	H_SP	High alarm setting	S/R
+5	010	L_SP	Low alarm setting	S/R
+6	011	LL_SP	Low/low alarm setting	S/R
+15	003	ERR	Execution error display	S
+17	099	OP_MK	Label	S/R
+18, bit 02	017	AOF	Alarm stop switch	S/R
+18, bit 15	000	MT_ST	Stop block operation command	S/R
+19, bit 00	013	HH	High/high alarm output	S
+19, bit 01	014	H	High alarm output	S
+19, bit 02	015	L	Low/low alarm output	S
+19, bit 03	016	LL	Low alarm output	S
+19, bit 05	019	PV_ABN	PV error display	S

Block Model 045: ES100X Controller Terminal

Offset (words)	ITEM	Tag ITEM	Data name	Send/ Receive
+0 (first word)	021	PV	PV	S
+1	029	SP	Current SP output	S
	072	SP	Current SP setting	R
+2	089	MV	MV(Manipulated variable)	S/R
+3	040	HH_SP	PV high/high alarm setting	S/R
+4	041	H_SP	PV high alarm setting	S/R
+5	042	L_SP	PV low alarm setting	S/R
+6	043	LL_SP	PV low/low alarm setting	S/R
+7	039	DVA_SP	Deviation alarm setting	S/R
+8	010	RES	Response code	S
+9	024	P	P (proportional band) (for display)	S
	056	P	P (proportional band) (for setting)	R
+10	025	I	I (integral time) (for display)	S
	057	I	I (integral time) (for setting)	R
+11	026	D	D (derivative time) (for display)	S
	058	D	D (derivative time) (for setting)	R
+12	027	MH	MV upper limit (for display)	S
	052	MH	MV upper limit (for setting)	R
+13	028	ML	MV lower limit (for display)	S
	053	ML	MV lower limit (for setting)	R
+14	009	ERR1	Controller error level display	S
+15	003	ERR	Execution error display	S
+16	098	MV_IDX	Operating status display	S/R
+17	099	OP_MK	Label	S/R
+18, bit 00	030	RUN	Operating status display	S
	080	RUN	ES100X operation command	R
+18, bit 01	031	A/M_SW	A/M switch disply	S
	081	A/M_SW	A/M switch	R
+18, bit 02	032	RMT	EX100 parameter setting method display	S
	082	RMT	EX100 parameter setting method Setting	R
+18, bit 03	033	AT	AT display	S
	083	AT	AT command	R
+18, bit 04	084	R/L_SW	RSP/LSP switch in this block	S/R
+18, bit 05	085	CAS_SET	SP setting method	S/R
+18, bit 06	050	AOF	Alarm stop switch	S/R
+18, bit 15	000	MT_ST	Stop block operation command	S/R
+19, bit 04	045	DVA	Deviation alarm value	S
+19, bit 05	046	HH	PV high/high alarm setting	S
+19, bit 06	047	H	PV high alarm value	S
+19, bit 07	048	L	PV low alarm value	S
+19, bit 08	049	LL	PV low/low alarm value	S
+19, bit 09	054	MHA	MV upper limit output	S
+19, bit 10	055	MLA	MV lower limit output	S

Block Model 110: 4-point Warning Indicator

Offset (words)	ITEM	Tag ITEM	Data name	Send/ Receive
+0 (first word)	007	PV	PV input	S
+3	008	HH_SP	High/high alarm setting	S/R
+4	009	H_SP	High alarm setting	S/R
+5	010	L_SP	Low alarm setting	S/R
+6	011	LL_SP	Low/low alarm setting	S/R
+15	003	ERR	Execution error display	S
+17	099	OP_MK	Label	S/R
+18, bit 02	017	AOF	Alarm stop switch	S/R
+18, bit 15	000	MT_ST	Stop block operation command	S/R
+19, bit 00	013	HH	High/high alarm output	S
+19, bit 01	014	H	High/high alarm output	S
+19, bit 02	015	L	Low alarm output	S
+19, bit 03	016	LL	Low/low alarm output	S
+19, bit 05	019	PV_ABN	PV error display	S

Block Model 111: High/Low Alarm

Offset (words)	ITEM	Tag ITEM	Data name	Send/ Receive
+0 (first word)	008	X1	Input	S
+4	009	A1	High setting	S/R
+5	010	A2	Low setting	S/R
+6	011	A3	Hysteresis setting	S/R
+15	003	ERR	Execution error display	S
+18, bit 15	000	MT_ST	Stop block operation command	S/R
+19, bit 00	012	U1	High alarm output	S
+19, bit 01	013	U2	Low alarm output	S

Block Model 112: Deviation Alarm

Offset (words)	ITEM	Tag ITEM	Data name	Send/ Receive
+0 (first word)	009	X1	Reference input	S
+1	010	X2	Input	S
+4	011	A1	Deviation high setting	S/R
+5	012	A2	Deviation low setting	S/R
+6	013	A3	Hysteresis	S/R
+15	003	ERR	Execution error display	S
+18, bit 15	000	MT_ST	Stop block operation command	S/R
+19, bit 00	014	U1	Deviation high alarm output	S
+19, bit 01	015	U2	Deviation low alarm output	S

Block Model 113: Rate-of-change Operation and Alarm

Offset (words)	ITEM	Tag ITEM	Data name	Send/ Receive
+0 (first word)	008	X1	Input	S
+4	012	A1	Positive direction alarm setting	S/R
+5	013	A2	Negative direction alarm setting	S/R
+6	014	A3	Hysteresis setting	S/R
+8	009	H	Sampling cycle (0: Operation cycle)	S/R
+9	010	N	Number of samples	S/R
+10	011	TM	Unit (0:%/s, 1:%/min, 2:%/h)	S/R
+12	015	Y1	Output rate-of-change	S
+15	003	ERR	Execution error display	S
+18, bit 15	000	MT_ST	Stop block operation command	S/R
+19, bit 00	016	U1	Positive direction alarm output	S
+19, bit 01	017	U2	Negative direction alarm output	S

Block Model 115: High/Low Limit

Offset (words)	ITEM	Tag ITEM	Data name	Send/ Receive
+0 (first word)	008	X1	Input	S
+4	009	A1	High limit	S/R
+5	010	A2	Low limit	S/R
+12	011	Y1	Output	S
+15	003	ERR	Execution error display	S
+18, bit 15	000	MT_ST	Stop block operation command	S/R

Block Model 116: Deviation Limit

Offset (words)	ITEM	Tag ITEM	Data name	Send/ Receive
+0 (first word)	009	X1	Input	S
+1	010	X2	Reference input	S
+4	011	A1	High deviation limit	S/R
+5	012	A2	Low deviation limit	S/R
+12	013	Y1	Output	S
+15	003	ERR	Execution error display	S
+18, bit 15	000	MT_ST	Stop block operation command	S/R

Block Model 118: Analog Signal Hold

Offset (words)	ITEM	Tag ITEM	Data name	Send/ Receive
+0 (first word)	008	X1	Input	S
+4	006	KN	Hold mode (1: Maximum value, 2: Instantaneous value, 3: Minimum value)	S/R
+12	010	Y1	Output	S
+15	003	ERR	Execution error display	S
+18, bit 00	009	S1	Reset switch Contact inputs and parameters are reset when set to 1. When the switch setting changes to 0 from 1 when ITEM006 is set to 2, inputs and parameters are held. When ITEM006 is set to either 1 or 3, contacts and parameters are held when the switch setting is 1 and are not held when the switch setting is 0.	S/R
+18, bit 15	000	MT_ST	Stop block operation command	S/R

Block Model 121: Addition or Subtraction

Offset (words)	ITEM	Tag ITEM	Data name	Send/ Receive
+0 (first word)	011	X1	Input	S
+1	012	X2	Input	S
+2	013	X3	Input	S
+3	014	X4	Input	S
+4	015	K1	K1 gain	S/R
+5	016	K2	K2 gain	S/R
+6	017	K3	K3 gain	S/R
+7	018	K4	K4 gain	S/R
+8	019	A1	A1 bias	S/R
+12	020	Y1	Output	S
+15	003	ERR	Execution error display 0: Normal, Other: Error	S
+18, bit 15	000	MT_ST	Stop block operation command	S/R

Block Model 122: Multiplication

Offset (words)	ITEM	Tag ITEM	Data name	Send/ Receive
+0 (first word)	009	X1	Input	S
+1	010	X2	Input	S
+4	011	K1	K1 gain	S/R
+5	012	K2	K2 gain	S/R
+6	013	A1	A1 bias	S/R
+7	014	A2	A2 bias	S/R
+8	015	A3	A3 bias	S/R
+12	016	Y1	Output	S
+15	003	ERR	Execution error display	S
+18, bit 15	000	MT_ST	Stop block operation command	S/R

Block Model 123: Division

Offset (words)	ITEM	Tag ITEM	Data name	Send/ Receive
+0 (first word)	009	X1	Input	S
+1	010	X2	Input	S
+4	011	K1	K1 gain	S/R
+5	012	K2	K2 gain	S/R
+6	013	A1	A1 bias	S/R
+7	014	A2	A2 bias	S/R
+8	015	A3	A3 bias	S/R
+12	016	Y1	Output	S
+15	003	ERR	Execution error display	S
+18, bit 15	000	MT_ST	Stop block operation command	S/R

Block Model 126: Arithmetic Operation

Offset (words)	ITEM	Tag ITEM	Data name	Send/ Receive
+0 (first word)	021	X1	X1 input value	S
+1	022	X2	X2 input value	S
+2	023	X3	X3 input value	S
+3	024	X4	X4 input value	S
+4	025	X5	X5 input value	S
+5	026	X6	X6 input value	S
+6	027	X7	X7 input value	S
+7	028	X8	X8 input value	S
+12	093	Y1	Normalized output value	S
+13	094	Y2	Floating-point decimal output value (upper digits of Y0)	S
+14	095	Y3	Floating-point decimal output value (lower digits of Y0)	S
+15	003	ERR	Execution error display	S
+18, bit 00	010	S0	Criteria mode	S/R
+18, bit 01	062	S2	Operation reset command	S/R
+18, bit 15	000	MT_ ST	Stop block operation command	S/R
+19, bit 00	080	U0	Judgement	S
+19, bit 08	061	S1	Contact input	S/R

Block Model 127: Range Conversion)

Offset (words)	ITEM	Tag ITEM	Data name	Send/ Receive
+0 (first word)	021	X1	Input value	S
+1	022	X2	Input value	S
+2	023	X3	Input value	S
+3	024	X4	Input value	S
+4	025	X5	Input value	S
+5	026	X6	Input value	S
+6	027	X7	Input value	S
+7	028	X8	Input value	S
+8	071	Y1	Output value	S
+9	072	Y2	Output value	S
+10	073	Y3	Output value	S
+11	074	Y4	Output value	S
+12	075	Y5	Output value	S
+13	076	Y6	Output value	S
+14	077	Y7	Output value	S
+15	003	ERR	Execution error display	S
+16	078	Y8	Output value	S

Block Model 131: Square Root

Offset (words)	ITEM	Tag ITEM	Data name	Send/ Receive
+0 (first word)	008	X1	Input	S
+4	009	K1	Gain	S/R
+5	010	A1	Input low-end cutout setting	S/R
+12	011	Y1	Output	S
+15	003	ERR	Execution error display	S
+18, bit 15	000	MT_ST	Stop block operation command	S/R

Block Model 132: Absolute Value

Offset (words)	ITEM	Tag ITEM	Data name	Send/ Receive
+0 (first word)	008	X1	Input	S
+12	009	Y1	Output	S
+15	003	ERR	Execution error display	S
+18, bit 15	000	MT_ST	Stop block operation command	S/R

Block Model 133: Non-linear Gain (Dead Band)

Offset (words)	ITEM	Tag ITEM	Data name	Send/ Receive
+0 (first word)	008	X1	Input	S
+4	009	K1	K1 gain	S/R
+5	010	K2	K2 gain	S/R
+6	011	K3	K3 gain	S/R
+7	012	A1	Segment point	S/R
+12	013	Y1	Output	S
+15	003	ERR	Execution error display	S
+18, bit 15	000	MT_ST	Stop block operation command	S/R

Block Model 134: Low-end Cutout

Offset (words)	ITEM	Tag ITEM	Data name	Send/ Receive
+0 (first word)	008	X1	Input	S
+4	009	A1	Low-end cutout setting	S/R
+12	010	Y1	Output	S
+15	003	ERR	Execution error display	S
+18, bit 15	000	MT_ST	Stop block operation command	S/R

Block Model 135: Segment Linearizer

Offset (words)	ITEM	Tag ITEM	Data name	Send/ Receive
+0 (first word)	007	X1	Input	S
+12	008	Y1	Output	S
+15	003	ERR	Execution error display	S
+18, bit 15	000	MT_ST	Stop block operation command	S/R

Block Model 136: Temperature and Pressure Correction

Offset (words)	ITEM	Tag ITEM	Data name	Send/ Receive
+0 (first word)	010	X1	Flow input	S
+1	011	X2	Pressure input	S
+2	012	X3	Temperature input	S
+4	013	K1	K1 gain	S/R
+5	014	K2	K2 gain	S/R
+6	015	K3	K3 gain	S/R
+7	016	A2	A2 gain	S/R
+8	017	A3	A3 gain	S/R
+12	018	Y1	Output	S
+15	003	ERR	Execution error display	S
+18, bit 15	000	MT_ST	Stop block operation command	S/R

Block Model 141: First-order Lag

Offset (words)	ITEM	Tag ITEM	Data name	Send/ Receive
+0 (first word)	008	X1	Input	S
+4	009	T	Time constant (0: No delay)	S/R
+12	011	Y1	Output	S
+15	003	ERR	Execution error display	S
+18, bit 00	010	S1	Reset switch (1: Y1=X1)	S/R
+18, bit 15	000	MT_ST	Stop block operation command	S/R

Block Model 143: Rate-of-change Limit

Offset (words)	ITEM	Tag ITEM	Data name	Send/ Receive
+0 (first word)	008	X1	Input	S
+4	009	A1	Positive ramp rate (Rate-of-change limit OFF when 0.00)	S/R
+5	010	A2	Negative ramp rate (Rate-of-change limit OFF when 0.00)	S/R
+6	013	TMU	Time unit	S/R
+12	012	Y1	Output	S
+15	003	ERR	Execution error display	S
+18, bit 00	011	S1	Reset Switch (1: Y1=X1)	S/R
+18, bit 15	000	MT_ST	Stop block operation command	S/R

Block Model 145: Moving Average

Offset (words)	ITEM	Tag ITEM	Data name	Send/ Receive
+0 (first word)	008	X1	Input	S
+4	009	H	Sampling cycle 0: Same as operation cycle	S/R
+5	010	N	Number of samples	S/R
+12	013	Y1	Output	S
+15	003	ERR	Execution error display	S
+18, bit 00	011	S1	Reset switch (1: Y1=X1)	S/R
+18, bit 01	012	S2	External sync contact (DIFU/DIFD commands used)	S/R
+18, bit 15	000	MT_ST	Stop block operation command	S/R

Block Model 147: Lead/Delay

Offset (words)	ITEM	Tag ITEM	Data name	Send/ Receive
+0 (first word)	008	X1	Input	S
+4	009	K1	Gain	S/R
+5	010	T1	Time constant (0: No Lead)	S/R
+6	011	T2	Time constant (0: No delay)	S/R
+12	013	Y1	Output	S
+15	003	ERR	Execution error display	S
+18, bit 00	012	S1	Reset switch (1:Y1=X1)	S/R
+18, bit 15	000	MT_ST	Stop block operation command	S/R

Block Model 148: Dead Time

Offset (words)	ITEM	Tag ITEM	Data name	Send/ Receive
+0 (first word)	008	X1	Input	S
+4	009	T	Time constant (0: No delay)	S/R
+5	010	H	Sampling cycle (0: Operation cycle)	S/R
+6	011	N	Number of samples	S/R
+12	013	Y1	Output	S
+15	003	ERR	Execution error display	S
+18, bit 00	012	S1	Reset switch (1:Y1=X1)	S/R
+18, bit 15	000	MT_ST	Stop block operation command	S/R

Block Model 149: Dead Time Compensation

Offset (words)	ITEM	Tag ITEM	Data name	Send/ Receive
+0 (first word)	008	X1	Input	S
+4	009	K	Gain	S/R
+5	010	T	Time constant	S/R
+6	011	H	Sampling cycle	S/R
+7	012	N	Number of samples	S/R
+12	014	Y1	Output	S
+15	003	ERR	Execution error display	S
+18, bit 00	013	S1	Reset switch (1:Y1=X1)	S/R
+18, bit 15	000	MT_ST	Stop block operation command	S/R

Block Model 150: Accumulator for Instantaneous Value Input

Offset (words)	ITEM	Tag ITEM	Data name	Send/ Receive
+0 (first word)	008	X1	Input	S
+4	012	Q1	Accumulated value (lower 4 digits)	S
+5	013	Q2	Accumulated value (upper 4 digits)	S
+6	022	Q3	Batch accumulated value	S
+7	010	TU	Time unit	S/R
+8	021	BM	Preset value	S/R
+15	003	ERR	Execution error display	S
+18, bit 00	014	S1	Reset switch (1: Reset)	S/R
+18, bit 01	015	S2	Interrupt swiitch (1: Interrupt)	S/R
+18, bit 02	023	S3	Batch controller reset switch (1: Reset)	S/R
+18, bit 15	000	MT_ST	Stop block operation command	S/R
+19, bit 00	024	U1	Arrival at preset value	S

Block Model 151: Run Time Accumulator

Offset (words)	ITEM	Tag ITEM	Data name	Send/ Receive
+4	008	Q1	Accumulated time (lower 4 digits)	S
+5	009	Q2	Accumulated tiime (upper 4 digits)	S
+6	007	PT	Pulse unit (0: s, 1: 10s, 2: min, 3: 10min, 4: h)	S/R
+15	003	ERR	Execution error display	S
+18, bit 00	010	S1	Input	S/R
+18, bit 01	011	S2	Stop	S/R
+18, bit 02	012	S3	Reset	S/R
+18, bit 15	000	MT_ST	Stop block operation command	S/R
+19, bit 00	013	U1	Unit pulse output	S

Block Model 153: Time Sequence Data Statistics

Offset (words)	ITEM	Tag ITEM	Data name	Send/ Receive
+0 (first word)	008	X1	Input	S
+4	009	H	Sampling cycle	S/R
+5	010	A	First data number in range	S/R
+6	011	N	Number of samples	S/R
+7	021	Y1	Average	S
+8	022	Y2	Smallest value	S
+9	023	Y3	Largest value	S
+10	024	Y4	Lower 4 digits of range	S
+11	025	Y5	Upper 4 digits of range	S
+12	026	Y6	Average deviation	S
+13	027	Y7	Lower 4 digits of variance	S
+14	028	Y8	Upper 4 digits of variance	S
+15	003	ERR	Execution error display	S
+16	029	Y9	Standard deviation	S
+18, bit 00	012	S1	Reset command	S/R
+18, bit 01	013	S2	External sync contact	S/R
+18, bit 15	000	MT_ST	Stop block operation command	S/R

Block Model 155: Ramp Program

Offset (words)	ITEM	Tag ITEM	Data name	Send/ Receive
+0 (first word)	007	X1	Reference input (input for external setting of start point)	S
+4	010	H0	Elapsed time unit	S/R
+5	020	A0	Default (Note, however, that reference input X1 is given priority and this value is invalid when the source designation of X1 is specified.)	S/R
+6	096	WB	Wait width (0: No wait operation)	S/R
+7	097	WT	Max. wait time (0.0: Unlimited)	S/R
+12	008	Y1	Program output	S
+13	009	Y2	Elapsed time output	S
+14	011	**Y3**	Process output (Process distinguishes between ramp and soak.)	S/R
+15	003	ERR	Execution error display	S
+18, bit 00	012	S1	Run/stop command (0: Reset, 1: Run)	S/R
+18, bit 01	013	S2	Hold switch (1: Hold)	S/R
+18, bit 02	014	S3	Move to next step command	S/R
+18, bit 15	000	MT_ST	Stop block operation command	S/R
+19, bit 00	015	U1	X1 input error	S
+19, bit 01	016	U2	Arrival at final step	S
+19, bit 02	017	U3	Holding	S
+19, bit 03	019	U4	Waiting (0: Not waiting, 1: Waiting)	S

Block Model 156: Segment Program

Offset (words)	ITEM	Tag ITEM	Data name	Send/ Receive
+0	007	X1	Reference input (input	S

Offset (words)	ITEM	Tag ITEM	Data name	Send/ Receive
(first word)			for external setting of start point)	
+4	012	H1	Time axis unit	S/R
+12	008	Y1	Program output	S
+13	009	Y2	Time axis output	S/R
+14	011	Y3	Step output	S/R
+15	003	ERR	Execution error display	S
+18, bit 00	013	S1	Run/stop command	S/R
+18, bit 01	014	S2	Hold switch	S/R
+18, bit 15	000	MT_ST	Stop block operation command	S/R
+19, bit 00	015	U1	X1 input (1: Error. Output is 0 when reference input X1 is not matching between No.1 segment B0 and B1.)	S
+19, bit 01	016	U2	Arrival at final segment	S

Model Number 157: Segment Program 2

Offset (words)	ITEM	Tag ITEM	Data name	Send/ Receive
+0 (first word)	007	X1	Reference input (input for external setting of start point)	S
+4	012	H1	Elapsed time unit	S/R
+12	008	Y1	Program output	S
+13	009	Y2	Elapsed time output	S
+14	011	**Y3**	Step output	S/R
+15	003	ERR	Execution error display	S
+18, bit 00	013	S1	Run/stop command	S/R
+18, bit 01	014	S2	Hold switch (1: Stop)	S/R
+18, bit 02	017	S3	Move to next wait command	S/R
+18, bit 03	018	S4	Move to next step command	S/R
+18, bit 04	020	S5	Reference input disable switch	S/R
+18, bit 15	000	MT_ST	Stop block operation command	S/R
+19, bit 00	015	U1	X1 input error	S
+19, bit 01	016	U2	Arrival at final segment	S
+19, bit 02	019	U10	Waiting (0: Not waiting, 1: Waiting)	S

Block Model 161: Rank Selector

Offset (words)	ITEM	Tag ITEM	Data name	Send/ Receive
+0 (first word)	021	X1	Input	S
+1	022	X2	Input	S
+2	023	X3	Input	S
+3	024	X4	Input	S
+4	025	X5	Input	S
+5	026	X6	Input	S
+6	027	X7	Input	S
+7	028	X8	Input	S
+12	007	Y1	Output	S
+15	003	ERR	Execution error display	S
+18, bit 15	000	MT_ST	Stop block operation command	S/R
+19, bit 00	031	U1	X1 selected	S
+19, bit 01	032	U2	X2 selected	S
+19, bit 02	033	U3	X3 selected	S
+19, bit 03	034	U4	X4 selected	S
+19, bit 04	035	U5	X5 selected	S
+19, bit 05	036	U6	X6 selected	S
+19, bit 06	037	U7	X7 selected	S
+19, bit 07	038	U8	X8 selected	S

Block Model 162: Input Selector

Offset (words)	ITEM	Tag ITEM	Data name	Send/ Receive
+0 (first word)	021	X1	Input	S
+1	022	X2	Input	S
+2	023	X3	Input	S
+3	024	X4	Input	S
+4	025	X5	Input	S
+5	026	X6	Input	S
+6	027	X7	Input	S
+7	028	X8	Input	S
+12	007	Y1	Output	S
+15	003	ERR	Execution error display	S
+18, bit 00	031	S1	X1 select switch	S/R
+18, bit 01	032	S2	X2 select switch	S/R
+18, bit 02	033	S3	X3 select switch	S/R
+18, bit 03	034	S4	X4 select switch	S/R
+18, bit 04	035	S5	X5 select switch	S/R
+18, bit 05	036	S6	X6 select switch	S/R
+18, bit 06	037	S7	X7 select switch	S/R
+18, bit 07	038	S8	X8 select switch	S/R
+18, bit 15	000	MT_ST	Stop block operation command	S/R

Block Model 163: 3-Input Selector

Offset (words)	ITEM	Tag ITEM	Data name	Send/ Receive
+0 (first word)	021	X1	Input	S
+1	022	X2	Input	S
+2	023	X3	Input	S
+3	024	X4	Input	S
+4	025	X5	Input	S
+5	026	X6	Input	S
+6	027	X7	Input	S
+7	028	X8	Input	S
+8	029	X9	Input	S
+12	006	Y1	Output	S
+13	007	Y2	Output	S
+14	008	Y3	Output	S
+15	003	ERR	Execution error display	S
+18, bit 00	031	S1	S1 select switch	S/R
+18, bit 01	032	S2	S2 select switch	S/R
+18, bit 02	033	S3	S3 select switch	S/R
+18, bit 03	034	S4	Output hold switch --- Output is held when set to ON.	S/R
+18, bit 15	000	MT_ST	Stop block operation command	S/R

Block Model 164: 3-Output Selector

Offset (words)	ITEM	Tag ITEM	Data name	Send/ Receive
+0 (first word)	014	X1	X1 input	S
+1	015	X2	X2 input	S
+2	016	X3	X3 input	S
+3	024	Y4	Output	S
+4	025	Y5	Output	S
+5	026	Y6	Output	S
+6	027	Y7	Output	S
+7	028	Y8	Output	S
+8	029	Y9	Output	S
+12	021	Y1	Output	S
+13	022	Y2	Output	S
+14	023	Y3	Output	S
+15	003	ERR	Execution error display	S
+18, bit 00	031	S1	S1 select switch	S/R
+18, bit 01	032	S2	S2 select switch	S/R
+18, bit 02	033	S3	S3 select switch	S/R
+18, bit 03	034	S4	Output hold switch --- Output is held when set to ON.	S/R
+18, bit 15	000	MT_ST	Stop block operation command	S/R

Block Model 165: Constant Selector

Offset (words)	ITEM	Tag ITEM	Data name	Send/ Receive
+0 (first word)	011	A1	A1 constant	S/R
+1	012	A2	A2 constant	S/R
+2	013	A3	A3 constant	S/R
+3	014	A4	A4 constant	S/R
+4	015	A5	A5 constant	S/R
+5	016	A6	A6 constant	S/R
+6	017	A7	A7 constant	S/R
+7	018	A8	A8 constant	S/R
+12	006	Y1	Output	S
+15	003	ERR	Execution error display	S
+18, bit 00	021	S1	A1 select switch	S/R
+18, bit 01	022	S2	A2 select switch	S/R
+18, bit 02	023	S3	A3 select switch	S/R
+18, bit 03	024	S4	A4 select switch	S/R
+18, bit 04	025	S5	A5 select switch	S/R
+18, bit 05	026	S6	A6 select switch	S/R
+18, bit 06	027	S7	A7 select switch	S/R
+18, bit 07	028	S8	A8 select switch	S/R
+18, bit 15	000	MT_S T	Stop block operation	S/R

Block Model 166: Constant Generator

Offset (words)	ITEM	Tag ITEM	Data name	Send/ Receive
+0 (first word)	011	A1	A1 constant	S/R
+1	012	A2	A2 constant	S/R
+2	013	A3	A3 constant	S/R
+3	014	A4	A4 constant	S/R
+4	015	A5	A5 constant	S/R
+5	016	A6	A6 constant	S/R
+6	017	A7	A7 constant	S/R
+7	018	A8	A8 constant	S/R
+15	003	ERR	Execution error display	S
+18, bit 15	000	MT_ST	Stop block operation command	S/R

Block Model 167: Ramped Switch

Offset (words)	ITEM	Tag ITEM	Data name	Send/ Receive
+0 (first word)	015	X1	Input value	S
+1	016	X2	Input value	S
+4	025	T	Time width	S/R
+5	026	TU	Time Unit	S/R
+12	030	Y1	Output value	S
+13	031	Y2	Remaining time	S
+15	003	ERR	Execution error display	S/R
+18, bit 00	027	S1	Input change command	S/R
+18, bit 01	028	S2	Reset command	S/R
+18, bit 15	000	MT_ST	Stop block operation command	S/R

Block Model 171: Constant ITEM Setting

Offset (words)	ITEM	Tag ITEM	Data name	Send/ Receive
+0 (first word)	021	E1	E1 setting	S/R
+1	022	E2	E2 setting	S/R
+2	023	E3	E3 setting	S/R
+3	024	E4	E4 setting	S/R
+4	025	E5	E5 setting	S/R
+5	026	E6	E6 setting	S/R
+6	027	E7	E7 setting	S/R
+7	028	E8	E8 setting	S/R
+15	003	ERR	Execution error display	S
+18, bit 00	031	S1	E1 send switch	S/R
+18, bit 01	032	S2	E2 send switch	S/R
+18, bit 02	033	S3	E3 send switch	S/R
+18, bit 03	034	S4	E4 send switch	S/R
+18, bit 04	035	S5	E5 send switch	S/R
+18, bit 05	036	S6	E6 send switch	S/R
+18, bit 06	037	S7	E7 send switch	S/R
+18, bit 07	038	S8	E8 send switch	S/R
+18, bit 08	039	S9	Batch send switch	S/R
+18, bit 15	000	MT_ST	Stop block operation command	S/R

Block Model 172: Variable ITEM Setting

Offset (words)	ITEM	Tag ITEM	Data name	Send/ Receive
+0 (first word)	021	X1	Input	S
+1	022	X2	Input	S
+2	023	X3	Input	S
+3	024	X4	Input	S
+4	025	X5	Input	S
+5	026	X6	Input	S
+6	027	X7	Input	S
+7	028	X8	Input	S
+15	003	ERR	Execution error display	S
+18, bit 00	041	S1	E1 send switch	S/R
+18, bit 01	042	S2	E2 send	S/R
+18, bit 02	043	S3	E3 send switch	S/R
+18, bit 03	044	S4	E4 send switch	S/R
+18, bit 04	045	S5	E5 send	S/R
+18, bit 05	046	S6	E6 send switch	S/R
+18, bit 06	047	S7	E7 send switch	S/R
+18, bit 07	048	S8	E8 send	S/R
+18, bit 08	049	S9	Batch send switch	S/R
+18, bit 15	000	MT_ST	Stop block operation command	S/R

Block Model 174: Batch Data Collector

Offset (words)	ITEM	Tag ITEM	Data name	Send/ Receive
+0 (first word)	021	D1	D1	S
+1	022	D2	D2 input	S
+2	023	D3	D3 input	S
+3	024	D4	D4 input	S
+4	025	D5	D5 input	S
+5	026	D6	D6 input	S
+6	027	D7	D7 input	S
+7	028	D8	D8 input	S
+15	003	ERR	Execution error display	S
+18, bit 00	031	S1	D1 input switch	S/R
+18, bit 01	032	S2	D2 input switch	S/R
+18, bit 02	033	S3	D3 input switch	S/R
+18, bit 03	034	S4	D4 input switch	S/R
+18, bit 04	035	S5	D5 input switch	S/R
+18, bit 05	036	S6	D6 input switch	S/R
+18, bit 06	037	S7	D7 input switch	S/R
+18, bit 07	038	S8	D8 input switch	S/R
+18, bit 08	039	S9	Batch input switch	S/R
+18, bit 09	040	S10	Batch clear buffer switch --- Contents (held values) of D1 to D8 buffers area batch-cleared when switch state changes from 0 to 1.	S/R
+18, bit 15	000	MT_ST	Stop block operation command	S/R

Model Number 182: Accumulated Value Input Adder

Offset (words)	ITEM	Tag ITEM	Data name	Send/ Receive
+0 (first word)	011	P1	Input	S
+1	012	P2	Input	S
+2	013	P3	Input	S
+3	014	P4	Input	S
+4	024	Q1	Accumulated value (lower 4 digits)	S
+5	025	Q2	Accumulated value (upper 4 digits)	S
+10	020	N	Sample number for moving average in instantaneous value conversion	S/R
+12	023	Y1	Instantaneous value output	S
+15	003	ERR	Execution error display	S
+18, bit 00	021	S1	Counter reset switch	S/R
+18, bit 01	022	S2	Interrupt switch	S/R
+18, bit 15	000	MT_ST	Stop block operation command	S/R

Model Number 183: Accumulated Value Analog Multiplier

Offset (words)	ITEM	Tag ITEM	Data name	Send/ Receive
+0 (first word)	012	X1	Input	S
+1	011	P1	Input	S
+4	021	Q1	Accumulated value (lower 4 digits)	S
+5	022	Q2	Accumulated value (upper 4 digits)	S
+8	014	K1	Gain	S/R
+9	015	A1	Bias	S/R
+10	017	N	Sample number for moving average in instantaneous value conversion	S/R
+12	020	Y1	Instantaneous value output	S
+15	003	ERR	Execution error display	S
+18, bit 00	018	S1	Counter reset switch	S/R
+18, bit 01	019	S2	Interrupt switch	S/R
+18, bit 15	000	MT_ST	Stop block operation command	S/R

Block Model 184: Accumulator for Accumulated Value Input

Offset (words)	ITEM	Tag ITEM	Data name	Send/ Receive
+0 (first word)	008	P1	Input	S
+4	012	Q1	Accumulated value (lower 4 digits)	S
+5	013	Q2	Accumulated value (upper 4 digits)	S
+6	022	Q3	Batch accumulated value	S
+8	021	BM	Preset value	S/R
+12	016	Y1	Instantaneous value output	S
+15	003	ERR	Execution error display	S
+18, bit 00	014	S1	Counter reset switch	S/R
+18, bit 01	015	S2	Interrupt switch	S/R
+18, bit 02	023	S3	Batch controller reset switch	S/R
+18, bit 15	000	MT_ST	Stop block operation command	S/R
+19, bit 00	024	U1	Arrival at preset value	S

Block Model 185: Contact Input/Accumulated Value Output

Offset (words)	ITEM	Tag ITEM	Data name	Send/ Receive
+4	011	Q1	Accumulated value (lower 4 digits)	S
+5	012	Q2	Accumulated value (upper 4 digits)	S
+15	003	ERR	Execution error display	S
+18, bit 00	008	S1	Contact input	S/R
+18, bit 01	009	S2	Reset switch	S/R
+18, bit 02	010	S3	Interrupt switch	S/R
+18, bit 15	000	MT_ST	Stop block operation command	S/R

Block Model 186: Accumulated Value Input/Contact Output

Offset (words)	ITEM	Tag ITEM	Data name	Send/ Receive
+0 (first word)	008	P1	Input	S
+15	003	ERR	Execution error display	S
+18, bit 00	010	S1	Counter reset switch	S/R
+18, bit 01	011	S2	Interrupt switch	S/R
+18, bit 15	000	MT_ST	Stop block operation command	S/R
+19, bit 00	012	U1	Contact output	S

Block Model 192: Analog/Pulse Width Converter

Offset (words)	ITEM	Tag ITEM	Data name	Send/ Receive
+0 (first word)	008	X1	Input	S
+4	009	CT	Pulse cycle time	S/R
+15	003	ERR	Execution error display	S
+18, bit 00	010	S1	Reset switch	S/R
+18, bit 15	000	MT_ST	Stop block operation command	S/R
+19, bit 00	011	U1	Contact output	S

Model Number 202: Constant Comparator

Offset (words)	ITEM	Tag ITEM	Data name	Send/ Receive
+0 (first word)	051	X1	X1 input value	S
+1	052	X2	X2 input value	S
+2	053	X3	X3 input value	S
+3	054	X4	X4 input value	S
+4	055	X5	X5 input value	S
+5	056	X6	X6 input value	S
+6	057	X7	X7 input value	S
+7	058	X8	X8 input value	S
+8	008	R1	R1 constant	S/R
+9	012	R2	R2 constant	S/R
+10	016	R3	R3 constant	S/R
+11	020	R4	R4 constant	S/R
+12	024	R5	R5 constant	S/R
+13	028	R6	R6 constant	S/R
+14	032	R7	R7 constant	S/R
+15	003	ERR	Execution error display	S
+16	036	R8	R8 constant	S/R
+18, bit 00	041	S1	Comparison stop command	S/R
+18, bit 01	042	S2	Forced 0 output command	S/R
+18, bit 02	043	S3	Forced 1 output command	S/R
+18, bit 15	000	MT_ST	Stop block operation command	S/R
+19, bit 00	010	U1	Comparison result	S
+19, bit 01	014	U2	Comparison result	S
+19, bit 02	018	U3	Comparison result	S
+19, bit 03	022	U4	Comparison result	S
+19, bit 04	026	U5	Comparison result	S
+19, bit 05	030	U6	Comparison result	S
+19, bit 06	034	U7	Comparison result	S
+19, bit 07	038	U8	Comparison result	S

Model Number 203: Variable Comparator

Offset (words)	ITEM	Tag ITEM	Data name	Send/ Receive
+0 (first word)	051	X1	X1 input value	S

Offset (words)	ITEM	Tag ITEM	Data name	Send/ Receive
+1	052	X2	X2 input value	S
+2	053	X3	X3 input value	S
+3	054	X4	X4 input value	S
+4	055	X5	X5 input value	S
+5	056	X6	X6 input value	S
+6	057	X7	X7 input value	S
+7	058	X8	X8 input value	S
+8	061	R1	R1 input value	S
+9	062	R2	R2 input value	S
+10	063	R3	R3 input value	S
+11	064	R4	R4 input value	S
+12	065	R5	R5 input value	S
+13	066	R6	R6 input value	S
+14	067	R7	R7 input value	S
+15	003	ERR	Execution error display	S
+16	068	R8	R8 input value	S
+18, bit 00	041	S1	Comparison stop command	S/R
+18, bit 01	042	S2	Forced 0 output command	S/R
+18, bit 02	043	S3	Forced 1 output command	S/R
+18, bit 15	000	MT_ST	Stop block operation command	S/R
+19, bit 00	010	U1	Comparison result	S
+19, bit 01	014	U2	Comparison result	S
+19, bit 02	018	U3	Comparison result	S
+19, bit 03	022	U4	Comparison result	S
+19, bit 04	026	U5	Comparison result	S
+19, bit 05	030	U6	Comparison result	S
+19, bit 06	034	U7	Comparison result	S
+19, bit 07	038	U8	Comparison result	S

Block Model 205: Timer

Offset (words)	ITEM	Tag ITEM	Data name	Send/ Receive
+4	008	PRS	Prediction (subtracted from setting)	S/R
+5	010	TMU	Time unit	S/R
+8	007	SP	Setting	S/R
+12	009	Y1	Time elapsed	S
+15	003	ERR	Execution error display	S
+18, bit 00	011	S1	Count switch	S/R
+18, bit 01	012	S2	Interrupt switch	S/R
+18, bit 15	000	MT_ST	Stop block operation command	S/R
+19, bit 00	013	U1	Arrival at setting	S
+19, bit 01	014	U2	Arrival at prediction	S

Block Model 206: ON/OFF Timer

Offset (words)	ITEM	Tag ITEM	Data name	Send/ Receive
+4	007	T1	ON time setting	S/R
+5	008	T2	OFF time setting	S/R
+6	009	TMU	Time unit	S/R
+12	010	Y1	Elapsed ON time	S
+13	011	Y2	Elapsed OFF time	S
+15	003	ERR	Execution error display	S
+18, bit 00	012	S1	Run/stop command	S/R
+18, bit 15	000	MT_ST	Stop block operation command	S/R
+19, bit 00	013	U1	Contact output	S

Model Number 207: Clock Pulse

Offset (words)	ITEM	Tag ITEM	Data name	Send/ Receive
+4	007	TS	Ts setting (unit: s)	S/R
+15	003	ERR	Execution error display	S
+18, bit 00	008	S1	Operation command (1: Clock pulse output ON)	S/R
+18, bit 15	000	MT_ST	Stop block operation command	S/R
+19, bit 00	009	U1	Clock pulse output	S

Block Model 208: Counter

Offset (words)	ITEM	Tag ITEM	Data name	Send/ Receive
+4	008	PRS	Prediction (subtracted from setting)	S/R
+8	007	SP	Setting	S/R
+12	009	Y1	Count	S
+15	003	ERR	Execution error display	S
+18, bit 00	010	S1	Run/stop command	S/R
+18, bit 15	000	MT_ST	Stop block operation command	S/R
+19, bit 00	012	U1	Arrival at setting	S
+19, bit 01	013	U2	Arrival at prediction	S

Block Model 209: Internal Switch

Offset (words)	ITEM	Tag ITEM	Data name	Send/ Receive
+0 (first word)	011 to 026	S1 to S16	Internal switches S1 to S16	S/R
+1	027 to 042	S17 to S32	Internal switches S17 to S32	S/R
+2	043 to 058	S33 to S48	Internal switches S33 to S48	S/R
+3	059 to 074	S49 to S64	Internal switches S49 to S64	S/R
+4	075 to 090	S65 to S80	Internal switches S65 to S80	S/R
+5	091 to 106	S81 to S96	Internal switches S81 to S96	S/R
+6	107 to 122	S97 to S112	Internal switches S97 to S112	S/R
+7	123 to 138	S113 to S128	Internal switches S113 to S128	S/R
+8	139 to 154	S129 to S144	Internal switches S129 to S144	S/R
+9	155 to 170	S145 to S160	Internal switches S145 to S160	S/R
+10	171 to 186	S161 to S176	Internal switches S161 to S176	S/R
+11	187 to 202	S177 to S192	Internal switches S177 to S192	S/R
+12	203 to 218	S193 to S208	Internal switches S193 to S208	S/R
+13	219 to 234	S209 to S224	Internal switches S209 to S224	S/R
+15	003	ERR	Execution error display	S
+18, bit 15	000	MT_ST	Stop block operation	S/R

Block Model 210: Level Check

Offset (words)	ITEM	Tag ITEM	Data name	Send/ Receive
+0 (first word)	007	X1	Iinput value	S
+1	010	A0	Lower limit	S/R
+2	011	A1	Level 1 upper limit	S/R
+3	012	A2	Level 2 upper limit	S/R
+4	013	A3	Level 3 upper limit	S/R
+5	014	A4	Level 4 upper limit	S/R
+6	015	A5	Level 5 upper limit	S/R
+7	016	A6	Level 6 upper limit	S/R
+8	017	A7	Level 7 upper limit	S/R
+9	018	A8	Level 8 upper limit	S/R
+10	019	A9	Upper hysterisis	S/R
+11	020	A10	Lower hysterisis	S/R
+12	030	Y1	Level No.	S
+15	003	ERR	Execution error display	S
+18, bit 15	000	MT_ST	Stop block operation command	S/R
+19, bit 00	031	U1	Level 1	S
+19, bit 01	032	U2	Level 2	S
+19, bit 02	033	U3	Level 3	S
+19, bit 03	034	U4	Level 4	S
+19, bit 04	035	U5	Level 5	S
+19, bit 05	036	U6	Level 6	S
+19, bit 06	037	U7	Level 7	S

Offset (words)	ITEM	Tag ITEM	Data name	Send/ Receive
+19, bit 07	038	U8	Level 8	S

Model Number 221: ON/OFF Valve Manipulator

Offset (words)	ITEM	Tag ITEM	Data name	Send/ Receive
+4	007	TO	Open time setting	S/R
+5	009	TC	Close time setting	S/R
+15	003	ERR	Execution error display	S
+17	099	OP_MK	Label	S/R
+18, bit 00	086	S1	Auto/Manual switching	S/R
+18, bit 02	013	S3	Manual input	S/R
+18, bit 15	000	MT_ST	Stop block operation command	S/R
+19, bit 00	021	U1	Manipulation output	S
+19, bit 01	022	U2	Valve action time error (1: Error)	S
+19, bit 02	023	U3	Valve open midway (1: Open midway)	S
+19, bit 07	012	S2	Auto input	S
+19, bit 08	085	S4	Site manipulation switch input (1: Site, 0: Central)	S
+19, bit 09	015	S5	Open limit switch input	S
+19, bit 10	016	S6	Close limit switch input	S

Model Number 222: Motor Manipulator

Offset (words)	ITEM	Tag ITEM	Data name	Send/ Receive
+0 (first word)	032	X1	CT input	S
+4	033	H_SP	CT input high alarm setting	S/R
+6	035	HS	Hysteresis setting	S/R
+7	006	ANS	Answer check time (unit: s)	S/R
+15	003	ERR	Execution error display	S
+17	099	OP_MK	Label	S/R
+18, bit 00	086	S1	Auto/Manual switching 0: Manual, 1: Auto	S/R
+18, bit 02	013	S3	Manual input	S/R
+18, bit 15	000	MT_ST	Stop block operation command (0: Cancel stop, 1: Stop)	S/R
+19, bit 00	021	U1	Manipulation output	S
+19, bit 01	022	U2	Answer error (1: Error, 0: Normal)	S
+19, bit 04	036	CTH	CT input high alarm output	S
+19, bit 07	012	S2	Auto input	S
+19, bit 08	085	S4	Site manipulation switch input (1: Site, 0: Central)	S
+19, bit 09	015	S5	Answer input	S

Model Number 223: Reversible Motor Manipulator

Offset (words)	ITEM	Tag ITEM	Data name	Send/ Receive
+0 (first word)	032	X1	CT input	S
+4	033	H_SP	CT input high alarm setting	S/R
+6	035	HS	Hysteresis setting	S/R
+7	006	ANS	Answer check time (unit: s)	S/R
+8	007	OFT	OFF time during FWD/REV switching (unit: s)	S/R
+15	003	ERR	Execution error display	S
+17	099	OP_MK	Label	S/R
+18, bit 00	086	S1	Auto/Manual switching 0: Manual, 1: Auto	S/R
+18, bit 03	014	S4	MAN-FWD input	S/R
+18, bit 05	016	S6	MAN-REV input	S/R
+18, bit 15	000	MT_ST	Stop block operation command	S/R
+19, bit 00	021	U1	FWD manipulation output	S
+19, bit 01	022	U2	REV manipulation output	S
+19, bit 02	023	U3	Answer error (1: Error, 0: Normal)	S
+19, bit 03	024	U4	Motor OFF state output (1: OFF)	S
+19, bit 04	036	CTH	CT input high alarm output	S
+19, bit 08	012	S2	AUTO-FWD input	S
+19, bit 09	013	S3	AUTO-REV input	S
+19, bit 10	085	S7	Site manipulation switch input	S
+19, bit 11	018	S8	FWD answer input	S
+19, bit 12	019	S9	REV answer input	S

Model Number 224: Motor Opening Manipulator

Offset (words)	ITEM	Tag ITEM	Data name	Send/ Receive
+0 (first word)	032	X1	Opening input	S
+1	014	SP	Current SP output	S
	013	SP	Manual input target opening setting	R
+2	012	X2	Auto input target opening	S
+4	033	H_SP	Opening input high limit alarm setting	S/R
+5	034	L_SP	Opening input low limit alarm setting	S/R
+6	035	HS	Hysteresis setting	S/R
+7	017	DB	Dead-band	S/R
+8	015	T1	Full-stroke time (unit: s)	S/R
+9	016	T2	Restart control time	S/R
+15	003	ERR	Execution error display	S
+17	099	OP_MK	Label	S/R
+18, bit 00	086	S1	Auto/Manual switching	S/R
+18, bit 15	000	MT_ST	Stop block operation command	S/R
+19, bit 00	021	U1	Open manipulation output	S
+19, bit 01	022	U2	Close manipulation output	S
+19, bit 02	036	H	Opening input high limit alarm output	S
+19, bit 03	037	L	Opening input low limit alarm output	S
+19, bit 08	085	S2	Site manipulation switch input (1: Site, 1: Central)	S
+19, bit 09	019	S3	Open monitor switch thermal relay operation (1: ON)	S
+19, bit 10	020	S4	Close monitor switch thermal relay operation (1: ON)	S

Appendix C
List of Data Memory Allocations of Node Terminal Blocks

The following describes how Node Terminals Send to Computer blocks and Send Terminal to All Nodes blocks are allocated to Data Memory area for Node Terminals on the CPU Unit.

Send to Computer blocks:	1-Block Send Terminal to Computer (Block Model 403) 4-Block Send Terminal to Computer (Block Model 404) DO to Computer (Block Model 401) AO to Computer (Block Model 402)
Send Terminal to All Nodes blocks:	DO Terminal to All Nodes (Block Model 407) AO Terminal to All Nodes (Block Model 408) DO Terminal Settings from Computer (Block Model 409) AO Terminal Settings from Computer (Block Model 410) (Ao/DO Terminal Settings from Computer blocks [modes 409 and 410] are allocated for use only when re-issuing FINS commands to the network.)

When the leading address of the Data Memory for Node Terminals is taken to be S

With Send to Computer blocks, S+24 is taken to be the lowermost word, and the number of words occupied per single Send to Computer block is fixed to 16 words (16 words are occupied even if the data is less than 16 words), and these 16 words are allocated in order to block addresses in ascending order from 501 to 532.
With Send Terminal to All Nodes blocks, S+536 is taken to be the lowermost word, and the number of words occupied per single Send Terminal to All Nodes block is fixed to two words, and these two words are allocated in order to block addresses in ascending order from 550 to 599.

Data Memory (D) for Node Terminals

	15 ... 00
S S+1 ~ S+23	System information
S+24 ~ S+40	Terminal to Computer Send Block at block address 501
S+41 ~ S+56	Terminal to Computer Send Block at block address 502
~	~
S+510 ~ S+535	Terminal to Computer Send Block at block address 531
S+536 S+537	Send Terminal to All Nodes at block address 550
~	~
S+634 S+635	Send Terminal to All Nodes at block address 599

Allocation of Each ITEM in Function Blocks by Block Send to Computer

When function blocks are to be sent to Data Memory for Node Terminals by 1-Block Send Terminal to Computer (Block Model 403) and 4-Block Send Terminal to Computer (Block Model 404), the locations on Data Memory to which the data of each ITEM are to be allocated are as follows.
When data is to be read from the Loop Control Unit by a host monitoring system such as SCADA software other than CX-Process Monitor, perform data acquisition according to the following allocation locations.

2-position ON/OFF (Block Model 001)

Note +0 word is the leading word allocated to the 1-Block Send Terminal to Computer block or the 4-Block Send Terminal to Computer block.

ITEM	Tag ITEM	Data name	1-Block Send Terminal to Computer	4-Block Send Terminal to Computer				Data range
				No.1	No2	No.3	No.4	
007	PV	PV input	+0 word	+0 word	+4 words	+8 words	+12 words	FA24 to FFFF, 0000 to 2CEC Hex (-15.00 to +115.00%)
029	SP	Current Set Point output	+1 word	+1 word	+5 words	+9 words	+13 words	FA24 to FFFF, 0000 to 2CEC Hex (-15.00 to +115.00%)
008	HH_SP	High/high alarm setting	+3 words	—	—	—	—	FA24 to FFFF, 0000 to 2CEC Hex (-15.00 to +115.00%)
009	H_SP	High alarm setting	+4 words	—	—	—	—	FA24 to FFFF, 0000 to 2CEC Hex (-15.00 to +115.00%)
010	L_SP	Low alarm setting	+5 words	—	—	—	—	FA24 to FFFF, 0000 to 2CEC Hex (-15.00 to +115.00%)
011	LL_SP	Low/low alarm setting	+6 words	—	—	—	—	FA24 to FFFF, 0000 to 2CEC Hex (-15.00 to +115.00%)
041	DVA_SP	Deviation alarm setting (Hysteresis is set at ITEM012.)	+7 words	—	—	—	—	0000 to 2CEC Hex (-15.00 to +115.00%)
099	OP_MK	Label	+8 words	—	—	—	—	0000 to 000F Hex (0 to 15)
026	R/L_SW	Remote/Local switch 0: Local 1: Remote Note: Valid only when ITEM024 is 1	+14 words bit 00	+3 words bit 00	+7 words bit 00	+11 words bit 00	+15 words bit 00	0, 1
086	A/M_SW	Auto/Manual switch 0: Manual, 1: Auto	+14 words bit 01	+3 words bit 01	+7 words bit 01	+11 words bit 01	+15 words bit 01	0, 1
013	HH	High/high alarm output	+14 words bit 02	+3 words bit 02	+7 words bit 02	+11 words bit 02	+15 words bit 02	0, 1
014	H	High alarm output	+14 words bit 03	+3 words bit 03	+7 words bit 03	+11 words bit 03	+15 words bit 03	0, 1
015	L	Low alarm output	+14 words bit 04	+3 words bit 04	+7 words bit 04	+11 words bit 04	+15 words bit 04	0, 1
016	LL	Low/low alarm output	+14 words bit 05	+3 words bit 05	+7 words bit 05	+11 words bit 05	+15 words bit 05	0, 1
042	DVA	Deviation alarm output	+14 words bit 06	+3 words bit 06	+7 words bit 06	+11 words bit 06	+15 words bit 06	0, 1
017	ALM_OFF	Alarm stop switch 0: Alarm, 1: Stop	+14 words bit 09	+3 words bit 09	+7 words bit 09	+11 words bit 09	+15 words bit 09	0, 1
000	MT_ST	Stop block operation command (0: Run, 1: Stop)	+14 words bit 10	+3 words bit 10	+7 words bit 10	+11 words bit 10	+15 words bit 10	0, 1
019	PV_ABN	PV execution error display 0: Normal, 1: Error → MANUAL mode	+14 words bit 11	+3 words bit 11	+7 words bit 11	+11 words bit 11	+15 words bit 11	0, 1
024	CAS_SET	Set Point setting mode (default) 0: Local only 1: Remote/Local Note: Setting to 0 invalidates ITEM026.	+14 words bit 13	+3 words bit 13	+7 words bit 13	+11 words bit 13	+15 words bit 13	0, 1
093	MV	Output	+14 words bit 14	+3 words bit 14	+7 words bit 14	+11 words bit 14	+15 words bit 14	0, 1

3-position ON/OFF (Block Model 002)

Note +0 word is the leading word allocated to the 1-Block Send Terminal to Computer block or the 4-Block Send Terminal to Computer block.

ITEM	Tag ITEM	Data name	1-Block Send Terminal to Computer	4-Block Send Terminal to Computer				Data range
				No.1	No2	No.3	No.4	
007	PV	PV input	+0 word	+0 word	+4 words	+8 words	+12 words	FA24 to FFFF, 0000 to 2CEC Hex (-15.00 to +115.00%)
029	SP	Current Set Point output	+1 word	+1 word	+5 words	+9 words	+13 words	FA24 to FFFF, 0000 to 2CEC Hex (-15.00 to +115.00%)
008	HH_SP	High/high alarm setting	+3 words	—	—	—	—	FA24 to FFFF, 0000 to 2CEC Hex (-15.00 to +115.00%)
009	H_SP	High alarm setting	+4 words	—	—	—	—	FA24 to FFFF, 0000 to 2CEC Hex (-15.00 to +115.00%)
010	L_SP	Low alarm setting	+5 words	—	—	—	—	FA24 to FFFF, 0000 to 2CEC Hex (-15.00 to +115.00%)
011	LL_SP	Low/low alarm setting	+6 words	—	—	—	—	FA24 to FFFF, 0000 to 2CEC Hex (-15.00 to +115.00%)
041	DVA_SP	Deviation alarm setting (Hysteresis is set at ITEM012.)	+7 words	—	—	—	—	0000 to 2CEC Hex (-15.00 to +115.00%)
099	OP_MK	Label	+8 words	—	—	—	—	0000 to 000F Hex (0 to 15)
026	R/L_SW	Remote/Local switch 0: Local 1: Remote Note: Valid only when ITEM024 is 1	+14 words bit 00	+3 words bit 00	+7 words bit 00	+11 words bit 00	+15 words bit 00	0, 1
086	A/M_SW	Auto/Manual switch 0: Manual, 1: Auto	+14 words bit 01	+3 words bit 01	+7 words bit 01	+11 words bit 01	+15 words bit 01	0, 1
013	HH	High/high alarm output	+14 words bit 02	+3 words bit 02	+7 words bit 02	+11 words bit 02	+15 words bit 02	0, 1
014	H	High alarm output	+14 words bit 03	+3 words bit 03	+7 words bit 03	+11 words bit 03	+15 words bit 03	0, 1
015	L	Low alarm output	+14 words bit 04	+3 words bit 04	+7 words bit 04	+11 words bit 04	+15 words bit 04	0, 1
016	LL	Low/low alarm output	+14 words bit 05	+3 words bit 05	+7 words bit 05	+11 words bit 05	+15 words bit 05	0, 1
042	DVA	Deviation alarm output	+14 words bit 06	+3 words bit 06	+7 words bit 06	+11 words bit 06	+15 words bit 06	0, 1
017	ALM_OFF	Alarm stop switch 0: Alarm, 1: Stop	+14 words bit 09	+3 words bit 09	+7 words bit 09	+11 words bit 09	+15 words bit 09	0, 1
000	MT_ST	Stop block operation command (0: Cancel stop, 1: Stop)	+14 words bit 10	+3 words bit 10	+7 words bit 10	+11 words bit 10	+15 words bit 10	0, 1
019	PV_ABN	PV execution error display 0: Normal, 1: Error → MANUAL mode	+14 words bit 11	+3 words bit 11	+7 words bit 11	+11 words bit 11	+15 words bit 11	0, 1
024	CAS_SET	Set Point setting mode (default) 0: Local only 1: Remote/Local Note: Setting to 0 invalidates ITEM026.	+14 words bit 13	+3 words bit 13	+7 words bit 13	+11 words bit 13	+15 words bit 13	0, 1
093	MVH	MVH output	+14 words bit 14	+3 words bit 14	+7 words bit 14	+11 words bit 14	+15 words bit 14	0, 1
095	MVL	MVH output	+14 words bit 15	+3 words bit 15	+7 words bit 15	+11 words bit 15	+15 words bit 15	0, 1

Basic PID (Block Model 011)

Note +0 word is the leading word allocated to the 1-Block Send Terminal to Computer block or the 4-Block Send Terminal to Computer block.

ITEM	Tag ITEM	Data name	1-Block Send Terminal to Computer	4-Block Send Terminal to Computer				Data range
				No.1	No2	No.3	No.4	
007	PV	PV input	+0 word	+0 word	+4 words	+8 words	+12 words	FA24 to FFFF, 0000 to 2CEC Hex (-15.00 to +115.00%)
029	SP	Current Set Point output	+1 word	+1 word	+5 words	+9 words	+13 words	FA24 to FFFF, 0000 to 2CEC Hex (-15.00 to +115.00%)
089	MV	host display of MV	+2 words	+2 words	+6 words	+10 words	+14 words	8300 to FFFF, 0000 to 7D00 Hex (±320.00%)
008	HH_SP	High/high alarm setting	+3 words	—	—	—	—	FA24 to FFFF, 0000 to 2CEC Hex (-15.00 to +115.00%)
009	H_SP	High alarm setting	+4 words	—	—	—	—	FA24 to FFFF, 0000 to 2CEC Hex (-15.00 to +115.00%)
010	L_SP	Low alarm setting	+5 words	—	—	—	—	FA24 to FFFF, 0000 to 2CEC Hex (-15.00 to +115.00%)
011	LL_SP	Low/low alarm setting	+6 words	—	—	—	—	FA24 to FFFF, 0000 to 2CEC Hex (-15.00 to +115.00%)
041	DVA_SP	Deviation alarm setting (Hysteresis is set at ITEM012.)	+7 words	—	—	—	—	0000 to 2CEC Hex (-15.00 to +115.00%)
099	OP_MK	Label	+8 words	—	—	—	—	0000 to 000F Hex (0 to 15)
054	P	Proportional band	+9 words	—	—	—	—	0001 to 270F Hex (0.1 to 999.9%)
055	I	Integral time (0: No integral action)	+10 words	—	—	—	—	0000 to 270F Hex (0000 to 270F Hex (0000 to 270F Hex (0 to 9999) sec.))
056	D	Differential time (0: No differential action)	+11 words	—	—	—	—	0000 to 270F Hex (0000 to 270F Hex (0 to 9999) sec.)
076	MH_LMT	High MV limit output	+12 words	—	—	—	—	8300 to FFFF, 0000 to 7D00 Hex (±320.00%)
077	ML_LMT	Low MV limit output	+13 words	—	—	—	—	8300 to FFFF, 0000 to 7D00 Hex (±320.00%)
026	R/L_SW	Remote/Local switch 0: Local 1: Remote Note: Valid only when ITEM024 is 1	+14 words bit 00	+3 words bit 00	+7 words bit 00	+11 words bit 00	+15 words bit 00	0, 1
086	A/M_SW	Auto/Manual switch 0: Manual, 1: Auto	+14 words bit 01	+3 words bit 01	+7 words bit 01	+11 words bit 01	+15 words bit 01	0, 1
013	HH	High/high alarm output	+14 words bit 02	+3 words bit 02	+7 words bit 02	+11 words bit 02	+15 words bit 02	0, 1
014	H	High alarm output	+14 words bit 03	+3 words bit 03	+7 words bit 03	+11 words bit 03	+15 words bit 03	0, 1
015	L	Low alarm output	+14 words bit 04	+3 words bit 04	+7 words bit 04	+11 words bit 04	+15 words bit 04	0, 1
016	LL	Low/low alarm output	+14 words bit 05	+3 words bit 05	+7 words bit 05	+11 words bit 05	+15 words bit 05	0, 1
042	DVA	Deviation alarm output	+14 words bit 06	+3 words bit 06	+7 words bit 06	+11 words bit 06	+15 words bit 06	0, 1

ITEM	Tag ITEM	Data name	1-Block Send Terminal to Computer	4-Block Send Terminal to Computer				Data range
				No.1	No2	No.3	No.4	
078	MHA	High MV limit output	+14 words bit 07	+3 words bit 07	+7 words bit 07	+11 words bit 07	+15 words bit 07	0, 1
079	MLA	Low MV limit output	+14 words bit 08	+3 words bit 08	+7 words bit 08	+11 words bit 08	+15 words bit 08	0, 1
017	ALM_OFF	Alarm stop switch 0: Alarm, 1: Stop	+14 words bit 09	+3 words bit 09	+7 words bit 09	+11 words bit 09	+15 words bit 09	0, 1
000	MT_ST	Stop block operation command (0: Run, 1: Stop)	+14 words bit 10	+3 words bit 10	+7 words bit 10	+11 words bit 10	+15 words bit 10	0, 1
019	PV_ABN	PV execution error display 0: Normal, 1: Error → MANUAL mode	+14 words bit 11	+3 words bit 11	+7 words bit 11	+11 words bit 11	+15 words bit 11	0, 1
091	MV_ABN	MV execution error display 0: Normal, 1: Error	+14 words bit 12	+3 words bit 12	+7 words bit 12	+11 words bit 12	+15 words bit 12	0, 1
024	CAS_SET	Set Point setting mode (default) 0: Local only 1: Remote/Local Note: Setting to 0 invalidates ITEM026.	+14 words bit 13	+3 words bit 13	+7 words bit 13	+11 words bit 13	+15 words bit 13	0, 1
035	AT	AT command/AT being executed	+14 words bit 14	+3 words bit 14	+7 words bit 14	+11 words bit 14	+15 words bit 14	0, 1
098	MV_IDX	MV index position	+15 words	—	—	—	—	FA24 toFFFF to 0000 to 2CEC Hex (-15.00 to +115.00%)

Advanced PID (Block Model 012)

Note +0 word is the leading word allocated to the 1-Block Send Terminal to Computer block or the 4-Block Send Terminal to Computer block.

ITEM	Tag ITEM	Data name	1-Block Send Terminal to Computer	4-Block Send Terminal to Computer				Data range
				No.1	No2	No.3	No.4	
007	PV	PV input	+0 word	+0 word	+4 words	+8 words	+12 words	FA24 to FFFF, 0000 to 2CEC Hex (-15.00 to +115.00%)
029	SP	Current Set Point output	+1 word	+1 word	+5 words	+9 words	+13 words	FA24 to FFFF, 0000 to 2CEC Hex (-15.00 to +115.00%)
089	MV	Host display of MV	+2 words	+2 words	+6 words	+10 words	+14 words	8300 to FFFF, 0000 to 7D00 Hex (±320.00%)
008	HH_SP	High/high alarm setting	+3 words	—	—	—	—	FA24 to FFFF, 0000 to 2CEC Hex (-15.00 to +115.00%)
009	H_SP	High alarm setting	+4 words	—	—	—	—	FA24 to FFFF, 0000 to 2CEC Hex (-15.00 to +115.00%)
010	L_SP	Low alarm setting	+5 words	—	—	—	—	FA24 to FFFF, 0000 to 2CEC Hex (-15.00 to +115.00%)
011	LL_SP	Low/low alarm setting	+6 words	—	—	—	—	FA24 to FFFF, 0000 to 2CEC Hex (-15.00 to +115.00%)
041	DVA_SP	Deviation alarm setting (Hysteresis is set at ITEM012.)	+7 words	—	—	—	—	0000 to 2CEC Hex (-15.00 to +115.00%)
099	OP_MK	Label	+8 words	—	—	—	—	0000 to 000F Hex (0 to 15)
054	P	Proportional band	+9 words	—	—	—	—	0001 to 270F Hex (0.1 to 999.9%)
055	I	Integral time (0: No integral action)	+10 words	—	—	—	—	0000 to 270F Hex (0000 to 270F Hex (0000 to 270F Hex (0 to 9999) sec.))
056	D	Differential time (0: No differential action)	+11 words	—	—	—	—	0000 to 270F Hex (0000 to 270F Hex (0 to 9999) sec.)
076	MH_LMT	High MV limit	+12 words	—	—	—	—	8300 to FFFF, 0000 to 7D00 Hex (±320.00%)
077	ML_LMT	Low MV limit	+13 words	—	—	—	—	8300 to FFFF, 0000 to 7D00 Hex (±320.00%)
026	R/L_SW	Remote/Local switch 0: Local 1: Remote Note: Valid only when ITEM024 is 1	+14 words bit 00	+3 words bit 00	+7 words bit 00	+11 words bit 00	+15 words bit 00	0, 1
086	A/M_SW	Auto/Manual switch 0: Manual, 1: Auto	+14 words bit 01	+3 words bit 01	+7 words bit 01	+11 words bit 01	+15 words bit 01	0, 1
013	HH	High/high alarm output	+14 words bit 02	+3 words bit 02	+7 words bit 02	+11 words bit 02	+15 words bit 02	0, 1
014	H	High alarm output	+14 words bit 03	+3 words bit 03	+7 words bit 03	+11 words bit 03	+15 words bit 03	0, 1
015	L	Low alarm output	+14 words bit 04	+3 words bit 04	+7 words bit 04	+11 words bit 04	+15 words bit 04	0, 1
016	LL	Low/low alarm output	+14 words bit 05	+3 words bit 05	+7 words bit 05	+11 words bit 05	+15 words bit 05	0, 1
042	DVA	Deviation alarm output	+14 words bit 06	+3 words bit 06	+7 words bit 06	+11 words bit 06	+15 words bit 06	0, 1

ITEM	Tag ITEM	Data name	1-Block Send Terminal to Computer	4-Block Send Terminal to Computer				Data range
				No.1	No2	No.3	No.4	
078	MHA	High MV limit arrival output 1: Limit or more, 0: Less than limit	+14 words bit 07	+3 words bit 07	+7 words bit 07	+11 words bit 07	+15 words bit 07	0, 1
079	MLA	Low MV limit arrival output 1: Limit or less, 0: Not limit or less	+14 words bit 08	+3 words bit 08	+7 words bit 08	+11 words bit 08	+15 words bit 08	0, 1
017	ALM_OFF	Alarm stop switch 0: Alarm, 1: Stop	+14 words bit 09	+3 words bit 09	+7 words bit 09	+11 words bit 09	+15 words bit 09	0, 1
000	MT_ST	Stop block operation command (0: Run, 1: Stop)	+14 words bit 10	+3 words bit 10	+7 words bit 10	+11 words bit 10	+15 words bit 10	0, 1
019	PV_ABN	PV execution error display 0: Normal, 1: Error → MANUAL mode	+14 words bit 11	+3 words bit 11	+7 words bit 11	+11 words bit 11	+15 words bit 11	0, 1
091	MV_ABN	MV execution error display 0: Normal, 1: Error	+14 words bit 12	+3 words bit 12	+7 words bit 12	+11 words bit 12	+15 words bit 12	0, 1
024	CAS_SET	Set Point setting mode (default) 0: Local only 1: Remote/Local Note: Setting to 0 invalidates ITEM026.	+14 words bit 13	+3 words bit 13	+7 words bit 13	+11 words bit 13	+15 words bit 13	0, 1
035	AT	AT command/AT executing	+14 words bit 14	+3 words bit 14	+7 words bit 14	+11 words bit 14	+15 words bit 14	0, 1
098	MV_IDX	MV index position	+15 words	—	—	—	—	FA24 to FFFF to 0000 to 2CEC Hex (-15.00 to +115.00%)

Blended PID (Block Model 013)

Note +0 word is the leading word allocated to the 1-Block Send Terminal to Computer block or the 4-Block Send Terminal to Computer block.

ITEM	Tag ITEM	Data name	1-Block Send Terminal to Computer	4-Block Send Terminal to Computer				Data range
				No.1	No2	No.3	No.4	
007	P1	PV input	+0 word	—	—	—	—	0000 to 270F Hex (0 to 9999)
027	K1	Ratio	+1 word	—	—	—	—	0000 to 7D00 Hex (0 to 3.2000)
089	MV	host display of MV	+2 words	—	—	—	—	8300 to FFFF, 0000 to 7D00 Hex (±320.00%)
012	Q1	Accumulated value (lower 4 digits)	+3 words	—	—	—	—	0000 to 270F Hex (0 to 9999)
013	Q2	Accumulated value (upper 4 digits)	+4 words	—	—	—	—	0000 to 270F Hex (0 to 9999)
016	Y1	Instantaneous value output	+5 words	—	—	—	—	0000 to 7D00 Hex (±320.00%)
029	Y2	Current Set Point instantaneous value output	+6 words	—	—	—	—	0000 to 7D00 Hex (±320.00%)
044	DEV_Q	Cumulative deviation output	+7 words					8300 to FFFF, 0000 to 7D00 Hex (±32000)
099	OP_MK	Label	+8 words	—	—	—	—	0000 to 000F Hex (0 to 15)
054	P	Proportional band	+9 words	—	—	—	—	0001 to 270F Hex (0.1 to 999.9%)
055	I	Integral time (0: No integral action)	+10 words	—	—	—	—	0000 to 270F Hex (0000 to 270F Hex (0000 to 9999) sec.))
056	D	Differential time (0: No differential action)	+11 words	—	—	—	—	0000 to 270F Hex (0000 to 270F Hex (0000 to 9999) sec.))
076	MH_LMT	High MV limit	+12 words	—	—	—	—	8300 to FFFF, 0000 to 7D00 Hex (±320.00%)
077	ML_LMT	Low MV limit	+13 words	—	—	—	—	8300 to FFFF, 0000 to 7D00 Hex (±320.00%)
086	A/M_SW	Auto/Manual switch 0: Manual, 1: Auto	+14 words bit 01	—	—	—	—	0, 1
036	DHH	Cumulative deviation High/high alarm output	+14 words bit 02	—	—	—	—	0, 1
037	DH	Cumulative deviation High alarm output	+14 words bit 03	—	—	—	—	0, 1
038	DL	Cumulative deviation Low alarm output	+14 words bit 04	—	—	—	—	0, 1
039	DLL	Cumulative deviation Low/low alarm output	+14 words bit 05	—	—	—	—	0, 1
078	MHA	High MV limit arrival	+14 words bit 07	—	—	—	—	0, 1
079	MLA	Low MV limit arrival	+14 words bit 08	—	—	—	—	0, 1
017	ALM_OF F	Alarm stop switch 0: Alarm, 1: Stop	+14 words bit 09	—	—	—	—	0, 1
000	MT_ST	Stop block operation command (0: Run, 1: Stop)	+14 words bit 10	—	—	—	—	0, 1
091	MV_ABN	MV execution error display 0: Normal, 1: Error	+14 words bit 12	—	—	—	—	0, 1
014	S1	Accumulation counter reset switch	+14 words bit 13	—	—	—	—	0, 1
043	S2	Cumulative deviation reset switch	+14 words bit 14	—	—	—	—	0, 1
098	MV_IDX	MV index position	+15 words	—	—	—	—	FA24 to FFFF, 0000 to 2CEC Hex (-15.00 to +115.00%)
015	PR	Pulse rate	Note 1					0000 to 2710 Hex (0 to 10.000)

Note1: This ITEM is written when new screens are displayed and when data is updated.

Batch Flowrate Capture (Block Model 014)

Note +0 word is the leading word allocated to the 1-Block Send Terminal to Computer block or the 4-Block Send Terminal to Computer block.

ITEM	Tag ITEM	Data name	1-Block Send Terminal to Computer	4-Block Send Terminal to Computer				Data range
				No.1	No2	No.3	No.4	
007	P1	PV input	+0 word	—	—	—	—	0000 to 270F Hex (0 to 9999)
029	SP	Current Set Point output (lower 4 digits)	+1 word	—	—	—	—	0000 to 270F Hex (0 to 9999)
089	MV	Host display of MV	+2 words	—	—	—	—	8300 to FFFF, 0000 to 7D00 Hex (±230.00%)
030	SPU	Current Set Point output (upper 4 digits)	+3 words	—	—	—	—	0000 to 270F Hex (0 to 9999)
035	SM	Batch accumulated value (lower 4 digits)	+4 words	—	—	—	—	0000 to 270F Hex (0 to 9999)
032	B0	Overrun setting (value subtracted from BM)	+5 words	—	—	—	—	0000 to 270F Hex (0 to 9999)
033	BP	Pre-batch setting (value subtracted from BM)	+6 words	—	—	—	—	0000 to 270F Hex (0 to 9999)
034	B1	Flowrate limitation	+7 words	—	—	—	—	0000 to 270F Hex (0 to 9999)
099	OP_MK	Label	+8 words	—	—	—	—	0000 to 000F Hex (0 to 15)
065	SMU	Batch accumulated value (upper 4 digits)	+9 words	—	—	—	—	0000 to 270F Hex (0 to 9999)
012	Q1	Accumulated value (lower 4 digits)	+10 words	—	—	—	—	0000 to 270F Hex (0 to 9999)
013	Q2	Accumulated value (upper 4 digits)	+11 words	—	—	—	—	0000 to 270F Hex (0 to 9999)
016	Y1	Instantaneous value output	+12 words	—	—	—	—	0000 to 7D00 Hex (0 to 320.00%)
017	PR	Pulse rate (for host indication: scale unit/pulse)	+13 words	—	—	—	—	0000 to 2710 Hex (0 to 10.000)
026	R/L_SW	Remote/Local switch 0: Local 1: Remote	+14 words bit 00	—	—	—	—	0, 1
086	A/M_SW	SW 0: Manual, 1: Auto	+14 words bit 01	—	—	—	—	0, 1
036	S1	Run switch (0: Reset, 1: Run)	+14 words bit 02	—	—	—	—	0, 1
037	S2	Control interrupt switch (1: Interrupt)	+14 words bit 03	—	—	—	—	0, 1
014	S3	Accumulation counter reset switch (1: Reset)	+14 words bit 04	—	—	—	—	0, 1
038	U1	Main batch output	+14 words bit 05	—	—	—	—	0, 1
039	U2	Pre-batch output	+14 words bit 06	—	—	—	—	0, 1
000	MT_ST	Stop block operation command (0: Cancel stop, 1: Stop)	+14 words bit 10	—	—	—	—	0, 1
098	MV_IDX	MV index position	+15 words	—	—	—	—	FA24 to FFFF, 0000 to 2CEC Hex (-15.00 to 115.00%)

Note 1 This ITEM is written when new screens are displayed and when data is updated.

Fuzzy Logic (Block Model 016)

Note +0 word is the leading word allocated to the 1-Block Send Terminal to Computer block or the 4-Block Send Terminal to Computer block.

ITEM	Tag ITEM	Data name	1-Block Send Terminal to Computer	4-Block Send Terminal to Computer				Data range
				No.1	No.2	No.3	No.4	
015	X1	X1 input value	+0 word	—	—	—	—	8300 to FFFF, 0000 to 7D00Hex (±320.00%)
016	X2	X2 input value	+1 word	—	—	—	—	8300 to FFFF, 0000 to 7D00Hex (±320.00%)
017	X3	X3 input value	+2 words	—	—	—	—	8300 to FFFF, 0000 to 7D00Hex (±320.00%)
018	X4	X4 input value	+3 words	—	—	—	—	8300 to FFFF, 0000 to 7D00Hex (±320.00%)
019	X5	X5 input value	+4 words	—	—	—	—	8300 to FFFF, 0000 to 7D00Hex (±320.00%)
020	X6	X6 input value	+5 words	—	—	—	—	8300 to FFFF, 0000 to 7D00Hex (±320.00%)
021	X7	X7 input value	+6 words	—	—	—	—	8300 to FFFF, 0000 to 7D00Hex (±320.00%)
022	X8	X8 input value	+7 words	—	—	—	—	8300 to FFFF, 0000 to 7D00Hex (±320.00%)
031	Y1	Y1 output value	+8 words	—	—	—	—	8300 to FFFF, 0000 to 7D00Hex (±320.00%)
032	Y2	Y2 output value	+9 words	—	—	—	—	8300 to FFFF, 0000 to 7D00Hex (±320.00%)
035	FN	Read rule numbers for fulfilled rules	+10 words	—	—	—	—	0001 to 0040 Hex (1 to 64)
036	FT	Applicability for each rule	+11 words	—	—	—	—	0000 to 2710 Hex (0 to 10000)
000	MT_ST	Stop block operation command (0: Cancel stop, 1: Stop)	+14 words, bit 10	—	—	—	—	0, 1

Indication and Setting (Block Model 031)

Note +0 word is the leading word allocated to the 1-Block Send Terminal to Computer block or the 4-Block Send Terminal to Computer block.

ITEM	Tag ITEM	Data name	1-Block Send Terminal to Computer	4-Block Send Terminal to Computer				Data range
				No.1	No2	No.3	No.4	
007	PV	PV input	+0 word	+0 word	+4 words	+8 words	+12 words	FA24 to FFFF, 0000 to 2CEC Hex (-15.00 to +115.00%)
029	SP	Current Set Point output	+1 word	+1 word	+5 words	+9 words	+13 words	FA24 to FFFF, 0000 to 2CEC Hex (-15.00 to +115.00%)
008	HH_SP	High/high alarm setting	+3 words	—	—	—	—	FA24 to FFFF, 0000 to 2CEC Hex (-15.00 to +115.00%)
009	H_SP	High alarm setting	+4 words	—	—	—	—	FA24 to FFFF, 0000 to 2CEC Hex (-15.00 to +115.00%)
010	L_SP	Low alarm setting	+5 words	—	—	—	—	FA24 to FFFF, 0000 to 2CEC Hex (-15.00 to +115.00%)
011	LL_SP	Low/low alarm setting	+6 words	—	—	—	—	FA24 to FFFF, 0000 to 2CEC Hex (-15.00 to +115.00%)
099	OP_MK	Label	+8 words	—	—	—	—	0000 to 000F Hex (0 to 15)
026	R/L_SW	Remote/Local switch 0: Local 1: Remote Note: Valid only when ITEM024 is 1	+14 words bit 00	+3 words bit 00	+7 words bit 00	+11 words bit 00	+15 words bit 00	0, 1
013	HH	High/high alarm output	+14 words bit 02	+3 words bit 02	+7 words bit 02	+11 words bit 02	+15 words bit 02	0, 1
014	H	High alarm output	+14 words bit 03	+3 words bit 03	+7 words bit 03	+11 words bit 03	+15 words bit 03	0, 1
015	L	Low alarm output	+14 words bit 04	+3 words bit 04	+7 words bit 04	+11 words bit 04	+15 words bit 04	0, 1
016	LL	Low/low alarm output	+14 words bit 05	+3 words bit 05	+7 words bit 05	+11 words bit 05	+15 words bit 05	0, 1
017	ALM_OFF	Alarm stop switch 0: Alarm, 1: Stop	+14 words bit 09	+3 words bit 09	+7 words bit 09	+11 words bit 09	+15 words bit 09	0, 1
000	MT_ST	Stop block operation command (0: Run, 1: Stop)	+14 words bit 10	+3 words bit 10	+7 words bit 10	+11 words bit 10	+15 words bit 10	0, 1
019	PV_ABN	PV error display	+14 words bit 11	+3 words bit 11	+7 words bit 11	+11 words bit 11	+15 words bit 11	0, 1
024	CAS_SET	Set Point setting mode (default) 0: Local only 1: Remote/Local Note: Setting to 0 invalidates ITEM026.	+14 words bit 13	+3 words bit 13	+7 words bit 13	+11 words bit 13	+15 words bit 13	0, 1

Indication and Operation (Block Model 032)

Note +0 word is the leading word allocated to the 1-Block Send Terminal to Computer block or the 4-Block Send Terminal to Computer block.

ITEM	Tag ITEM	Data name	1-Block Send Terminal to Computer	4-Block Send Terminal to Computer				Data range
				No.1	No2	No.3	No.4	
007	PV	PV input	+0 word	+0 word	+4 words	+8 words	+12 words	FA24 to FFFF, 0000 to 2CEC Hex (-15.00 to +115.00%)
084	X1	Auto input	+1 word	+1 word	+5 words	+9 words	+13 words	8300 to FFFF, 0000 to 7D00 Hex (±320.00%)
089	MV	Host display of MV	+2 words	+2 words	+6 words	+10 words	+14 words	8300 to FFFF, 0000 to 7D00 Hex (±320.00%)
008	HH_SP	High/high alarm setting	+3 words	—	—	—	—	FA24 to FFFF, 0000 to 2CEC Hex (-15.00 to +115.00%)
009	H_SP	High alarm setting	+4 words	—	—	—	—	FA24 to FFFF, 0000 to 2CEC Hex (-15.00 to +115.00%)
010	L_SP	Low alarm setting	+5 words	—	—	—	—	FA24 to FFFF, 0000 to 2CEC Hex (-15.00 to +115.00%)
011	LL_SP	Low/low alarm setting	+6 words	—	—	—	—	FA24 to FFFF, 0000 to 2CEC Hex (-15.00 to +115.00%)
099	OP_MK	Label	+8 words	—	—	—	—	0000 to 000F Hex (0 to 15)
076	MH_LMT	High MV limit	+12 words	—	—	—	—	8300 to FFFF, 0000 to 7D00 Hex (±320.00%)
077	ML_LMT	Low MV limit	+13 words	—	—	—	—	8300 to FFFF, 0000 to 7D00 Hex (±320.00%)
086	A/M_SW	Auto/Manual switch 0: Manual, 1: Auto	+14 words bit 01	+3 words bit 00	+7 words bit 00	+11 words bit 00	+15 words bit 00	0, 1
013	HH	High/high alarm output	+14 words bit 02	+3 words bit 02	+7 words bit 02	+11 words bit 02	+15 words bit 02	0, 1
014	H	High alarm output	+14 words bit 03	+3 words bit 03	+7 words bit 03	+11 words bit 03	+15 words bit 03	0, 1
015	L	Low alarm output	+14 words bit 04	+3 words bit 04	+7 words bit 04	+11 words bit 04	+15 words bit 04	0, 1
016	LL	Low/low alarm output	+14 words bit 05	+3 words bit 05	+7 words bit 05	+11 words bit 05	+15 words bit 05	0, 1
078	MHA	High MV limit output	+14 words bit 07	+3 words bit 07	+7 words bit 07	+11 words bit 07	+15 words bit 07	0, 1
079	MLA	Low MV limit output	+14 words bit 08	+3 words bit 08	+7 words bit 08	+11 words bit 08	+15 words bit 08	0, 1
017	ALM_OFF	Alarm stop switch 0: Alarm, 1: Stop	+14 words bit 09	+3 words bit 09	+7 words bit 09	+11 words bit 09	+15 words bit 09	0, 1
000	MT_ST	Stop block operation command (0:Run, 1: Stop)	+14 words bit 10	+3 words bit 10	+7 words bit 10	+11 words bit 10	+15 words bit 10	0, 1
019	PV_ABN	PV error display	+14 words bit 11	+3 words bit 11	+7 words bit 11	+11 words bit 11	+15 words bit 11	0, 1
091	MV_ABN	MV error display	+14 words bit 12	+3 words bit 12	+7 words bit 12	+11 words bit 12	+15 words bit 12	0, 1
098	MV_IDX	MV index position	+15 words	—	—	—	—	FA24 to FFFF, 0000 to 2CEC Hex (15.00 to +115.00%)

Ratio Setting (Block Model 033)

Note +0 word is the leading word allocated to the 1-Block Send Terminal to Computer block or the 4-Block Send Terminal to Computer block.

ITEM	Tag ITEM	Data name	1-Block Send Terminal to Computer	4-Block Send Terminal to Computer				Data range
				No.1	No2	No.3	No.4	
007	PV	Reference input	+0 word	+0 word	+4 words	+8 words	+12 words	FA24 to FFFF, 0000 to 2CEC Hex (-15.00 to +115.00%)
029	SP	Current SP output	+1 word	+1 word	+5 words	+9 words	+13 words	FA24 to FFFF, 0000 to 2CEC Hex (-15.00 to +115.00%)
089	MV	Host display of MV	+2 words	+2 words	+6 words	+10 words	+14 words	8300 to FFFF, 0000 to 7D00 Hex (±320.00%)
099	OP_MK	Label	+8 words	—	—	—	—	0000 to 000F Hex (0 to 15)
054	K1	Ratio range (sets signal ratio range corresponding to Set Point=100%)	+9 words	—	—	—	—	D8F0 to FFFF, 0000 to 2710 Hex (±10.000)
055	A1	Input bias	+10 words	—	—	—	—	8300 to FFFF, 0000 to 7D00 Hex (±320.00%)
056	B1	Output bias	+11 words	—	—	—	—	8300 to FFFF, 0000 to 7D00 Hex (±320.00%)
076	MH_LMT	High MV limit	+12 words	—	—	—	—	8300 to FFFF, 0000 to 7D00 Hex (±320.00%)
077	ML_LMT	Low MV limit	+13 words	—	—	—	—	8300 to FFFF, 0000 to 7D00 Hex (±320.00%)
026	R/L_SW	Remote/Local switch 0: Local, 1: Remote Note: Valid only when ITEM024 is 1	+14 words bit 00	+3 words bit 00	+7 words bit 00	+11 words bit 00	+15 words bit 00	0, 1
086	A/M_SW	Auto/Manual switch 0: Manual, 1: Auto	+14 words bit 01	+3 words bit 01	+7 words bit 01	+11 words bit 01	+15 words bit 01	0, 1
078	MHA	High MV limit output	+14 words bit 07	+3 words bit 07	+7 words bit 07	+11 words bit 07	+15 words bit 07	0, 1
079	MLA	Low MV limit output	+14 words bit 08	+3 words bit 08	+7 words bit 08	+11 words bit 08	+15 words bit 08	0, 1
000	MT_ST	Stop block operation command (0: Run, 1: Stop)	+14 words bit 10	+3 words bit 10	+7 words bit 10	+11 words bit 10	+15 words bit 10	0, 1
019	PV_ABN	PV error display	+14 words bit 11	+3 words bit 11	+7 words bit 11	+11 words bit 11	+15 words bit 11	0, 1
091	MV_ABN	MV error display	+14 words bit 12	+3 words bit 12	+7 words bit 12	+11 words bit 12	+15 words bit 12	0, 1
024	CAS_SET	Ratio setting mode (default) 0: Local only 1: Remote/Local Note: Setting to 0 invalidates ITEM026.	+14 words bit 13	+3 words bit 13	+7 words bit 13	+11 words bit 13	+15 words bit 13	0, 1
098	MV_IDX	MV index position	+15 words	—	—	—	—	FA24 to FFFF, 0000 to 2CEC Hex (-15.00 to +115.00%)

Indicator (Block Model 034)

Note +0 word is the leading word allocated to the 1-Block Send Terminal to Computer block or the 4-Block Send Terminal to Computer block.

ITEM	Tag ITEM	Data name	1-Block Send Terminal to Computer	4-Block Send Terminal to Computer				Data range
				No.1	No2	No.3	No.4	
007	PV	PV input	+0 word	+0 word	+4 words	+8 words	+12 words	FA24 to FFFF, 0000 to 2CEC Hex (-15.00 to +115.00%)
008	HH_SP	High/high alarm setting	+3 words	—	—	—	—	FA24 to FFFF, 0000 to 2CEC Hex (-15.00 to +115.00%)
009	H_SP	High alarm setting	+4 words	—	—	—	—	FA24 to FFFF, 0000 to 2CEC Hex (-15.00 to +115.00%)
010	L_SP	Low alarm setting	+5 words	—	—	—	—	FA24 to FFFF, 0000 to 2CEC Hex (-15.00 to +115.00%)
011	LL_SP	Low/low alarm setting	+6 words	—	—	—	—	FA24 to FFFF, 0000 to 2CEC Hex (-15.00 to +115.00%)
099	OP_MK	Label	+8 words	—	—	—	—	0000 to 000F Hex (0 to 15)
013	HH	High/high alarm output	+14 words bit 02	+3 words bit 02	+7 words bit 02	+11 words bit 02	+15 words bit 02	0, 1
014	H	High alarm output	+14 words bit 03	+3 words bit 03	+7 words bit 03	+11 words bit 03	+15 words bit 03	0, 1
015	L	Low alarm output	+14 words bit 04	+3 words bit 04	+7 words bit 04	+11 words bit 04	+15 words bit 04	0, 1
016	LL	Low/low alarm output	+14 words bit 05	+3 words bit 05	+7 words bit 05	+11 words bit 05	+15 words bit 05	0, 1
017	ALM_OFF	Alarm stop switch 0: Alarm, 1: Stop	+14 words bit 09	+3 words bit 09	+7 words bit 09	+11 words bit 09	+15 words bit 09	0, 1
000	MT_ST	Stop block operation command (0: Run, 1: Stop)	+14 words bit 10	+3 words bit 10	+7 words bit 10	+11 words bit 10	+15 words bit 10	0, 1
019	PV_ABN	PV error display	+14 words bit 11	+3 words bit 11	+7 words bit 11	+11 words bit 11	+15 words bit 11	0, 1

High/Low Alarm (Block Model 111)

The high/low alarm cannot be sent by the 1-Block Send Terminal to Computer block.

Note +0 word is the leading word allocated to the 1-Block Send Terminal to Computer block or the 4-Block Send Terminal to Computer block.

ITEM	Tag ITEM	Data name	1-Block Send Terminal to Computer	4-Block Send Terminal to Computer				Data range
				No.1	No2	No.3	No.4	
008	PV	Input	—	+0 word	+4 words	+8 words	+12 words	8300 to FFFF, 0000 to 7D00 Hex (±320.00%)
009	H_SP	High setting	—	+1 word	+5 words	+9 words	+13 words	8300 to FFFF, 0000 to 7D00 Hex (±320.00%)
010	L_SP	Low setting	—	+2 words	+6 words	+10 words	+14 words	8300 to FFFF, 0000 to 7D00 Hex (±320.00%)
012	H	High alarm output	—	+3 words bit 00	+7 words bit 00	+11 words bit 00	+15 words bit 00	0, 1
013	L	Low alarm output	—	+3 words bit 01	+7 words bit 01	+11 words bit 01	+15 words bit 01	0, 1

Segment Program 2 (Block Model 157)

Note +0 word is the leading word allocated to the 1-Block Send Terminal to Computer block or the 4-Block Send Terminal to Computer block.

ITEM	Tag ITEM	Data name	1-Block Send Terminal to Computer	4-Block Send Terminal to Computer				Data range
				No.1	No2	No.3	No.4	
007	X1	Reference input	—	+0 word	+4 words	+8 words	+12 words	8300 to FFFF, 0000 to 7D00 Hex (±320.00%)
008	Y1	Program output	—	+1 word	+5 words	+9 words	+13 words	8300 to FFFF, 0000 to 7D00 Hex (±320.00%)
011	Y3	Step output	—	+2 words	+6 words	+10 words	+14 words	0 to 30
019	U10	Waiting	—	+3 words bit 00	+7 words bit 00	+11 words bit 00	+15 words bit 00	0, 1
015	U1	X1 input error	—	+3 words bit 01	+7 words bit 01	+11 words bit 01	+15 words bit 01	0, 1
016	U2	Arrival at final segment	—	+3 words bit 02	+7 words bit 02	+11 words bit 02	+15 words bit 02	0, 1
013	S1	Run/stop command	—	+3 words bit 03	+7 words bit 03	+11 words bit 03	+15 words bit 03	0, 1
014	S2	Time axis hold switch	—	+3 words bit 04	+7 words bit 04	+11 words bit 04	+15 words bit 04	0, 1
017	S3	Move to next wait command	—	+3 words bit 05	+7 words bit 05	+11 words bit 05	+15 words bit 05	0, 1
018	S4	Move to next step command	—	+3 words bit 06	+7 words bit 06	+11 words bit 06	+15 words bit 06	0, 1
020	S5	Reference input disable switch	—	+3 words bit 07	+7 words bit 07	+11 words bit 07	+15 words bit 07	0, 1
000		Stop block operation command	—	+3 words bit 10	+7 words bit 10	+11 words bit 10	+15words bit 10	0, 1

Timer (Block Model 205)

The timer cannot be sent by the 1-Block Send Terminal to Computer block.

Note +0 word is the leading word allocated to the 1-Block Send Terminal to Computer block or the 4-Block Send Terminal to Computer block.

ITEM	Tag ITEM	Data name	1-Block Send Terminal to Computer	4-Block Send Terminal to Computer				Data range
				No.1	No2	No.3	No.4	
009	PV	Time elapsed	—	+0 word	+4 words	+8 words	+12 words	0000 to 7D00 Hex (0 to 3200.0)
007	SP	Setting	—	+1 word	+5 words	+9 words	+13 words	0000 to 7D00 Hex (0 to 3200.0)
008	PRESET	Prediction (subtracted from setting)	—	+2 words	+6 words	+10 words	+14 words	0000 to 7D00 Hex (0 to 3200.0)
013	U1	Setting reached	—	+3 words bit 00	+7 words bit 00	+11 words bit 00	+15 words bit 00	0, 1
014	U2	Prediction reached	—	+3 words bit 01	+7 words bit 01	+11 words bit 01	+15 words bit 01	0, 1
011	S1	Run switch	—	+3 words bit 02	+7 words bit 02	+11 words bit 02	+15 words bit 02	0, 1
012	S2	Interrupt switch	—	+3 words bit 03	+7 words bit 03	+11 words bit 03	+15 words bit 03	0, 1

Counter (Block Model 208)

The counter cannot be sent by the 1-Block Send Terminal to Computer block.

Note +0 word is the leading word allocated to the 1-Block Send Terminal to Computer block or the 4-Block Send Terminal to Computer block.

ITEM	Tag ITEM	Data name	1-Block Send Terminal to Computer	4-Block Send Terminal to Computer				Data range
				No.1	No2	No.3	No.4	
009	PV	Count	—	+0 word	+4 words	+8 words	+12 words	0000 to 270F Hex (0 to 9999)
007	SP	Setting	—	+1 word	+5 words	+9 words	+13 words	0000 to 270F Hex (0 to 9999)
008	PRESET	Prediction (subtracted from setting)	—	+2 words	+6 words	+10 words	+14 words	0000 to 270F Hex (0 to 9999)
012	U1	Setting reached	—	+3 words bit 00	+7 words bit 00	+11 words bit 00	+15 words bit 00	0, 1
013	U2	Prediction reached	—	+3 words bit 01	+7 words bit 01	+11 words bit 01	+15 words bit 01	0, 1
010	S1	Run switch	—	+3 words bit 02	+7 words bit 02	+11 words bit 02	+15 words bit 02	0, 1

ON/OFF Valve Manipulator (Block Model 221)

Note +0 word is the leading word allocated to the 1-Block Send Terminal to Computer block or the 4-Block Send Terminal to Computer block.

ITEM	Tag ITEM	Data name	1-Block Send Terminal to Computer	4-Block Send Terminal to Computer				Data range
				No.1	No2	No.3	No.4	
099	OP_MK	Label	—	+2 words	+6 words	+10 words	+14 words	0000 to 000F Hex (0 to 15)
086	S1	Auto/Manual switching	—	+3 words bit 00	+7 words bit 00	+11 words bit 00	+15 words bit 00	0, 1
012	S2	Auto input	—	+3 words bit 01	+7 words bit 01	+11 words bit 01	+15 words bit 01	0, 1
013	S3	Manual input	—	+3 words bit 02	+7 words bit 02	+11 words bit 02	+15 words bit 02	0, 1
085	S4	Site manipulation switch input	—	+3 words bit 03	+7 words bit 03	+11 words bit 03	+15 words bit 03	0, 1
015	S5	Open limit switch input	—	+3 words bit 04	+7 words bit 04	+11 words bit 04	+15 words bit 04	0, 1
016	S6	Close limit switch input	—	+3 words bit 05	+7 words bit 05	+11 words bit 05	+15 words bit 05	0, 1
021	U1	Manipulation output	—	+3 words bit 06	+7 words bit 06	+11 words bit 06	+15 words bit 06	0, 1
022	U2	Valve action time error	—	+3 words bit 07	+7 words bit 07	+11 words bit 07	+15 words bit 07	0, 1
023	U3	Valve open midway	—	+3 words bit 08	+7 words bit 08	+11 words bit 08	+15 words bit 08	0, 1

Motor Manipulator (Block Model 222)

Note +0 word is the leading word allocated to the 1-Block Send Terminal to Computer block or the 4-Block Send Terminal to Computer block.

ITEM	Tag ITEM	Data name	1-Block Send Terminal to Computer	4-Block Send Terminal to Computer				Data range
				No.1	No2	No.3	No.4	
032	X1	CT input	—	+0 word	+4 words	+8 words	+12 words	8300 to FFFF, 0000 to 7D00 Hex (±320.00%)
033	H_SP	CT input high alarm setting	—	+1 word	+5 words	+9 words	+13 words	8300 to FFFF, 0000 to 7D00 Hex (±320.00%)
099	OP_MK	Label	—	+2 words	+6 words	+10 words	+14 words	0000 to 000F Hex (0 to 15)
086	S1	Auto/Manual switching	—	+3 words bit 00	+7 words bit 00	+11 words bit 00	+15 words bit 00	0, 1
012	S2	Auto input	—	+3 words bit 01	+7 words bit 01	+11 words bit 01	+15 words bit 01	0, 1
013	S3	Manual input	—	+3 words bit 02	+7 words bit 02	+11 words bit 02	+15 words bit 02	0, 1
085	S4	Site manipulation switch input	—	+3 words bit 03	+7 words bit 03	+11 words bit 03	+15 words bit 03	0, 1
015	S5	Answer input	—	+3 words bit 04	+7 words bit 04	+11 words bit 04	+15 words bit 04	0, 1
021	U1	Manipulation output	—	+3 words bit 05	+7 words bit 05	+11 words bit 05	+15 words bit 05	0, 1
022	U2	Answer error	—	+3 words bit 06	+7 words bit 06	+11 words bit 06	+15 words bit 06	0, 1
036	CTH	CT input high alarm output	—	+3 words bit 13	+7 words bit 13	+11 words bit 13	+15 words bit 13	0, 1

Reversible Motor Manipulator (Block Model 223)

Note +0 word is the leading word allocated to the 1-Block Send Terminal to Computer block or the 4-Block Send Terminal to Computer block.

ITEM	Tag ITEM	Data name	1-Block Send Terminal to Computer	4-Block Send Terminal to Computer				Data range
				No.1	No2	No.3	No.4	
032	X1	CT input	—	+0 word	+4 words	+8 words	+12 words	8300 to FFFF, 0000 to 7D00 Hex (±320.00%)
033	H_SP	CT input high alarm setting	—	+1 word	+5 words	+9 words	+13 words	8300 to FFFF, 0000 to 7D00 Hex (±320.00%)
099	OP_MK	Label	—	+2 words	+6 words	+10 words	+14 words	0000 to 000F Hex (0 to 15)
086	S1	Auto/Manual switching	—	+3 words bit 00	+7 words bit 00	+11 words bit 00	+15 words bit 00	0, 1
012	S2	AUTO-FWD input	—	+3 words bit 01	+7 words bit 01	+11 words bit 01	+15 words bit 01	0, 1
013	S3	AUTO-REV input	—	+3 words bit 02	+7 words bit 02	+11 words bit 02	+15 words bit 02	0, 1
014	S4	MAN-FWD input	—	+3 words bit 03	+7 words bit 03	+11 words bit 03	+15 words bit 03	0, 1
016	S6	MAN-REV input	—	+3 words bit 05	+7 words bit 05	+11 words bit 05	+15 words bit 05	0, 1
085	S7	Site manipulation switch input	—	+3 words bit 06	+7 words bit 06	+11 words bit 06	+15 words bit 06	0, 1
018	S8	FWD answer input	—	+3 words bit 07	+7 words bit 07	+11 words bit 07	+15 words bit 07	0, 1
019	S9	REV answer input	—	+3 words bit 08	+7 words bit 08	+11 words bit 08	+15 words bit 08	0, 1
021	U1	FWD manipulation output	—	+3 words bit 09	+7 words bit 09	+11 words bit 09	+15 words bit 09	0, 1
022	U2	REV manipulation output	—	+3 words bit 10	+7 words bit 10	+11 words bit 10	+15 words bit 10	0, 1
023	U3	Answer error	—	+3 words bit 11	+7 words bit 11	+11 words bit 11	+15 words bit 11	0, 1
024	U4	Motor OFF state output	—	+3 words bit 12	+7 words bit 12	+11 words bit 12	+15 words bit 12	0, 1
036	CTH	CT input high alarm output	—	+3 words bit 13	+7 words bit 13	+11 words bit 13	+15 words bit 13	0, 1

Motor Opening Manipulator (Block Model 224)

Note +0 word is the leading word allocated to the 1-Block Send Terminal to Computer block or the 4-Block Send Terminal to Computer block.

ITEM	Tag ITEM	Data name	1-Block Send Terminal to Computer	4-Block Send Terminal to Computer				Data range
				No.1	No2	No.3	No.4	
032	X1	Opening input	—	+0 word	+4 words	+8 words	+12 words	8300 to FFFF, 0000 to 7D00 Hex (±320.00%)
014	SP	Current SP	—	+1 word	+5 words	+9 words	+13 words	8300 to FFFF, 0000 to 7D00 Hex (±320.00%)
099	OP_MK	Label	—	+2 words	+6 words	+10 words	+14 words	0000 to 000F Hex (0 to 15)
086	S1	Auto/Manual switching	—	+3 words bit 00	+7 words bit 00	+11 words bit 00	+15 words bit 00	0, 1
085	S2	Site manipulation switch input	—	+3 words bit 01	+7 words bit 01	+11 words bit 01	+15 words bit 01	0, 1
019	S3	Open monitor switch thermal relay operation	—	+3 words bit 02	+7 words bit 02	+11 words bit 02	+15 words bit 02	0, 1
020	S4	Close monitor switch thermal relay operation	—	+3 words bit 03	+7 words bit 03	+11 words bit 03	+15 words bit 03	0, 1
021	U1	Open manipulation output	—	+3 words bit 04	+7 words bit 04	+11 words bit 04	+15 words bit 04	0, 1
022	U2	Close manipulation output	—	+3 words bit 05	+7 words bit 05	+11 words bit 05	+15 words bit 05	0, 1
036	H	Opening input high limit alarm output	—	+3 words bit 13	+7 words bit 13	+11 words bit 13	+15 words bit 13	0, 1
037	L	Opening input low limit alarm output	—	+3 words bit 14	+7 words bit 14	+11 words bit 14	+15 words bit 14	0, 1

DO to Computer (Block Model 401)

ITEM	Tag ITEM	Data name	Data memory (D) area	Data range
020	S0	Contact input	+0 word bit 00	0, 1
to	to		to	
035	S15	Contact input	+0 word bit 15	0, 1
036	S16	Contact input	+1 word bit 00	0, 1
to	to		to	
051	S31	Contact input	+1 word bit 15	0, 1
052	S32	Contact input	+2 words bit 00	0, 1
to			to	
067	S47	Contact input	+2 words bit 15	0, 1
068	S48	Contact input	+3 words bit 00	0, 1
to			to	
084	S64	Contact input	+3 words bit 15	0, 1
to			to	
132	S112	Contact input	+7 words bit 00	0, 1
to			to	
147	S127	Contact input	+7 words bit 15	0, 1

AO to Computer (Block Model 402)

ITEM	Symbol	Data name	Data memory (D) area	Data range
041	X1	Analog input	+0 word	8300 toFFFF, 0000 to 7D00 Hex (±320.00%)
to	to		to	
056	X16	Analog input	+15 words	8300 toFFFF, 0000 to 7D00 Hex (±320.00%)

DO Terminal to All Nodes (Block Model 407)

ITEM	Symbol	Data name	Data memory (D) area	Data range
020	S0	Contact input	+0 word bit 00	0, 1
to	to		to	
035	S15	Contact input	+0 word bit 15	0, 1
036	S16	Contact input	+1 word bit 00	0, 1
to	to		to	
051	S31	Contact input	+1 word bit 15	0, 1

AO Terminal to All Nodes (Block Model 408)

ITEM	Symbol	Data name	Data memory (D) area	Data range
031	X1	Analog input	+0 word	8300 toFFFF, 0000 to 7D00 Hex (±320.00%)
032	X2	Analog input	+1 word	8300 toFFFF, 0000 to 7D00 Hex (±320.00%)

DO Terminal Settings from Computer (Block Model 409)

The DO Terminal Settings from Computer block is allocated for use only when re-issuing FINS commands to the network.

ITEM	Symbol	Data name	Data memory (D) area	Data range
020	U0	Contact output	+0 word bit 00	0, 1
to			to	
035	U15	Contact output	+0 word bit 15	0, 1
036	U16	Contact output	+1 word bit 00	0, 1
to			to	
051	U31	Contact output	+1 word bit 15	0, 1

AO Terminal Settings from Computer (Block Model 410)

The AO Terminal Settings from Computer block is allocated for use only when re-issuing FINS commands to the network.

ITEM	Symbol	Data name	Data memory (D) area	Data range
031	Y1	Analog output	+0 word	8300 toFFFF, 0000 to 7D00 Hex (±320.00%)
032	Y2	Analog output	+1 word	8300 toFFFF, 0000 to 7D00 Hex (±320.00%)

Index

Numerics

1-Block Send Terminal to Computer 350
2-position ON/OFF 50
3-input Selector 240
3-output Selector 243
3-position ON/OFF 56
4-Block Send Terminal to Computer 352
4-Point Warning Indicator 143

A

Absolute Value 176
Accumulated Value Analog Multiplier 266
Accumulated Value Input Adder 263
Accumulated Value Input/ Contact Output 276
Accumulator for accumulated value input 269
Accumulator for instantaneous value input 198
Addition or Subtraction 158
Advanced PID 78
AI 2-point/AO 2-point Terminal (MAD01) 414
AI 4-point Terminal (PTS01/02/03, PDC01, PTW01) 416
AI 4-point Terminal (AD041) 432
AI 4-point Terminal (DRT1-AD04) 436
AI 4-point/AO 4-point Terminal (MAD44) 426
AI 8-point Terminal (AD003) 411
AI 8-point Terminal (AD081) 428
AI 8-point Terminal (PTR01/02) 424
AI Terminal from All Nodes 364
AI Terminal from CPU Unit 369
ALARM TIMER 331, 344
Analog Signal Hold 156
Analog/Pulse Width Converter 279
AND 329
AND LOAD 329, 337
AND NOT 329
AO 2-point Terminal (DRT1-DA02) 438
AO 4-point Terminal (DA041) 434
AO 4-point Terminal (PMV01) 422
AO 8-point Terminal (DA003/4) 412
AO 8-point Terminal (DA08V/C) 430
AO Terminal Settings from Computer 360
AO Terminal to All Nodes 357
AO Terminal to CPU Unit 372
AO to Computer 348
Arithmetic Operation 164

B

Basic PID 63
Batch Data Collector 260
Batch Flowrate Capture 98
Blended PID 91
BLOCK RESET 330, 342
BLOCK SET 330, 341

C

Clock Pulse 295
Constant Comparator 283
Constant Generator 249
Constant ITEM Setting 253
Constant Selector 246
Contact Distributor 281
Contact Input/ Accumulated Value Output 273
Counter 297

D

DD 330
Dead Time 194
Dead Time Compensation 196
Deviation Alarm 148
Deviation Limit 154
DI 16-point Terminal 397
DI 16-point/DO 16-point Terminal 407
DI 32-point Terminal 398
DI 48-point/DO 48-point Terminal 410
DI 64-point Terminal 399
DI 8-point Terminal 396
DI 96-point Terminal 408
DI Terminal from All Nodes 362
DI Terminal from CPU Unit 365
DIFD 330, 339
DIFU 330, 339
Division 162
DO 12-point Terminal 403
DO 16-point Terminal 404
DO 32-point Terminal 405
DO 5-point Terminal 401
DO 64-point Terminal 406
DO 8-point Terminal 402
DO 96-point Terminal 409
DO Terminal Settings from Computer 358
DO Terminal to All Nodes 355
DO Terminal to CPU Unit 367
DO to Computer 346
DU 330

E

END 331
ES100X Controller Terminal 131
Expanded AI Terminal from CPU Unit 379
Expanded AO Terminal to CPU Unit 382
Expanded DI Terminal from CPU Unit 375
Expanded DO Terminal to CPU Unit 377

F

First-order Lag 186
Fuzzy Logic 104

H

High/Low Alarm 146
High/Low Limit 152

I

Indication and Operation 120
Indication and Setting 116
Indicator 128
Input Selector 237
Internal Switch 299

J

JUMP 330, 342

L

Lead/Delay 192
Level Check 301
LOAD 329, 336
LOAD NOT 329, 336
Low-end Cutout 180

M

Motor Manipulator 310
Motor Opening Manipulator 320
Moving Average 190
Multiplication 160

N

NO OPERATION 331
Non-linear Gain (Dead Band) 178

O

ON/OFF Timer 293
ON/OFF Valve Manipulator 306
OR 329
OR LOAD 329, 337
OR NOT 329
OUT 329, 337
OUT NOT 329, 337

P

PI 4-point Terminal (PPS01) 419

R

Ramp Program 208
Ramped Switch 251
Range Conversion 171
Rank Selector 234
Rate-of-change Limit 188
Rate-of-change Operation and Alarm 150
Ratio Setting 124
Receive All Blocks 385
RESET 329, 338
Reversible Motor Manipulator 315
Run Time Accumulator 202

S

Segment Linearizer 181
Segment Program 217
Segment Program 2 221
Send All Blocks 393
SET 329, 338
Square Root 174
STEP 340
STEP declaration 330
Step Ladder Program 326
STEP TIMER 331, 344
System Common blocks 38

T

Temperature and Pressure Correction 184
Time Sequence Data Statistics 204
Timer 291

V

Variable Comparator 287
Variable ITEM Setting 256

Revision History

A manual revision code appears as a suffix to the catalog number on the front cover of the manual.

Man. No. W375-E1-05

Revision symbol

The following table outlines the changes made to the manual during each revision. Page numbers refer to the previous version.

Revision code	Data	Revised content
01	June 1999	Original production
02	November 2000	Addition of the following function blocks and corrections made to errors. • ES100X Controller Terminal (Block Model 045) • 4-point Warning Indicator (Block Model 110) • Arithmetic Operation (Block Model 126) • Time Sequence Data Statistics (Block Model 153) • Receive All Blocks (Block Model 461) • Send All Blocks (Block Model 462) Addition of the following function blocks and corrections made to errors • DIP switch setting added to enable battery-free operation using flash memory. • RX-232C port application added for connection to ES100X Controller.
03	July 2001	Addition of the following function blocks and corrections made to errors. • Fuzzy Logic (Block Model 016) • Range Conversion (Block Model 127) • Ramped Switch (Block Model 167) • Level Check (Block Model 210) • Ai4 Terminal (DRT1-AD04) (Block Model 588) • Ao2Terminal (DRT1-DA02) (Block Model 589) Addition of the following function block ITEMS and corrections made to errors • Block Registration Flag (ITEM 039) and Tool Version (ITEM 110) in System Common (Block Model 000). • Warning Limit (ITEM 012) in Basic PID (Block Model 011, Advanced PID (Block Model 020), 2-Position ON/OFF (Block Model 001), 3-Position ON/OFF (Block Model 002), Indication and Setting (Block Model 031), Indication and Operation (Block Model 032), Ratio Setting (Block Model 033), Indicator (Block Model 034), and 4-Point Warning Indicator (Block Model 110). • SP Rate-of-change Limit Time Unit (ITEM 030) in Advanced PID (Block Model 012). • Local SP Setting, Upper 4 Digits (ITEM 024), Remote SP Setting, Upper 4 Digits (ITEM 028), Current SP Value, Upper 4 Digits (ITEM 030), Preset Value, Upper 4 Digits (ITEM 061), and Batch Accumulated Value, Upper 4 Digits (ITEM 065) in Batch Flowrate (Block Model 014). • Time Unit (ITEM 013) in Rate-of-change Limit (Block Model 143). • Reference Input Disable Switch (ITEM 020) in Segment Program 2 (Block Model 157). • Output Type (ITEM 006) in Contact Distributor (Block Model 201). • Range settings in AI Terminal from CPU Unit (Block Model 453), AO Terminal to CPU Unit (Block Model 454), Ai4 Terminal (Block Model 561), Pi4 Terminal (Block Model 562), and Ai8 Terminal (Block Model 564). • Receive Disable Switch (ITEM 225) in Expanded DI Terminal from CPU Unit (Block Model 455) and Expanded AI Terminal from CPU Unit (Block Model 457) and Send Disable Switch (ITEM 225) in Expanded DO Terminal from CPU Unit (Block Model 456) and Expanded AO Terminal from CPU Unit (Block Model 458).
04	Octorber 2002	corrections made to errors
05	August 2003	corrections made to errors

OMRON CORPORATION
FA Systems Division H.Q.
66 Matsumoto
Mishima-city, Shizuoka 411-8511
Japan
Tel: (81)55-977-9181/Fax: (81)55-977-9045

Regional Headquarters

OMRON EUROPE B.V.
Wegalaan 67-69, NL-2132 JD Hoofddorp
The Netherlands
Tel: (31)2356-81-300/Fax: (31)2356-81-388

OMRON ELECTRONICS LLC
1 East Commerce Drive, Schaumburg, IL 60173
U.S.A.
Tel: (1)847-843-7900/Fax: (1)847-843-8568

OMRON ASIA PACIFIC PTE. LTD.
83 Clemenceau Avenue,
#11-01, UE Square,
Singapore 239920
Tel: (65)6835-3011/Fax: (65)6835-2711

OMRON

Authorized Distributor:

Cat. No. W375-E1-05

Note: Specifications subject to change without notice

Printed in Japan

Read and Understand this Manual

Please read and understand this manual before using the product. Please consult your OMRON representative if you have any questions or comments.

Warranty and Limitations of Liability

WARRANTY

OMRON's exclusive warranty is that the products are free from defects in materials and workmanship for a period of one year (or other period if specified) from date of sale by OMRON.

OMRON MAKES NO WARRANTY OR REPRESENTATION, EXPRESS OR IMPLIED, REGARDING NON-INFRINGEMENT, MERCHANTABILITY, OR FITNESS FOR PARTICULAR PURPOSE OF THE PRODUCTS. ANY BUYER OR USER ACKNOWLEDGES THAT THE BUYER OR USER ALONE HAS DETERMINED THAT THE PRODUCTS WILL SUITABLY MEET THE REQUIREMENTS OF THEIR INTENDED USE. OMRON DISCLAIMS ALL OTHER WARRANTIES, EXPRESS OR IMPLIED.

LIMITATIONS OF LIABILITY

OMRON SHALL NOT BE RESPONSIBLE FOR SPECIAL, INDIRECT, OR CONSEQUENTIAL DAMAGES, LOSS OF PROFITS OR COMMERCIAL LOSS IN ANY WAY CONNECTED WITH THE PRODUCTS, WHETHER SUCH CLAIM IS BASED ON CONTRACT, WARRANTY, NEGLIGENCE, OR STRICT LIABILITY.

In no event shall the responsibility of OMRON for any act exceed the individual price of the product on which liability is asserted.

IN NO EVENT SHALL OMRON BE RESPONSIBLE FOR WARRANTY, REPAIR, OR OTHER CLAIMS REGARDING THE PRODUCTS UNLESS OMRON'S ANALYSIS CONFIRMS THAT THE PRODUCTS WERE PROPERLY HANDLED, STORED, INSTALLED, AND MAINTAINED AND NOT SUBJECT TO CONTAMINATION, ABUSE, MISUSE, OR INAPPROPRIATE MODIFICATION OR REPAIR.

Application Considerations

SUITABILITY FOR USE

OMRON shall not be responsible for conformity with any standards, codes, or regulations that apply to the combination of products in the customer's application or use of the products.

At the customer's request, OMRON will provide applicable third party certification documents identifying ratings and limitations of use that apply to the products. This information by itself is not sufficient for a complete determination of the suitability of the products in combination with the end product, machine, system, or other application or use.

The following are some examples of applications for which particular attention must be given. This is not intended to be an exhaustive list of all possible uses of the products, nor is it intended to imply that the uses listed may be suitable for the products:

- Outdoor use, uses involving potential chemical contamination or electrical interference, or conditions or uses not described in this manual.
- Nuclear energy control systems, combustion systems, railroad systems, aviation systems, medical equipment, amusement machines, vehicles, safety equipment, and installations subject to separate industry or government regulations.
- Systems, machines, and equipment that could present a risk to life or property.

Please know and observe all prohibitions of use applicable to the products.

NEVER USE THE PRODUCTS FOR AN APPLICATION INVOLVING SERIOUS RISK TO LIFE OR PROPERTY WITHOUT ENSURING THAT THE SYSTEM AS A WHOLE HAS BEEN DESIGNED TO ADDRESS THE RISKS, AND THAT THE OMRON PRODUCTS ARE PROPERLY RATED AND INSTALLED FOR THE INTENDED USE WITHIN THE OVERALL EQUIPMENT OR SYSTEM.

PROGRAMMABLE PRODUCTS

OMRON shall not be responsible for the user's programming of a programmable product, or any consequence thereof.

Disclaimers

CHANGE IN SPECIFICATIONS

Product specifications and accessories may be changed at any time based on improvements and other reasons.

It is our practice to change model numbers when published ratings or features are changed, or when significant construction changes are made. However, some specifications of the products may be changed without any notice. When in doubt, special model numbers may be assigned to fix or establish key specifications for your application on your request. Please consult with your OMRON representative at any time to confirm actual specifications of purchased products.

DIMENSIONS AND WEIGHTS

Dimensions and weights are nominal and are not to be used for manufacturing purposes, even when tolerances are shown.

PERFORMANCE DATA

Performance data given in this manual is provided as a guide for the user in determining suitability and does not constitute a warranty. It may represent the result of OMRON's test conditions, and the users must correlate it to actual application requirements. Actual performance is subject to the OMRON Warranty and Limitations of Liability.

ERRORS AND OMISSIONS

The information in this manual has been carefully checked and is believed to be accurate; however, no responsibility is assumed for clerical, typographical, or proofreading errors, or omissions.