Cat. No. V228-E1-02

生産終了
DISCONTINUED

ITNC-EPX01
ITNC-EPX01-DRM

Open Network Controller Version 2

OPERATION MANUAL

OMRON

ITNC-EPX01
ITNC-EPX01-DRM

Open Network Controller Version 2

Operation Manual

Revised October 2004

Notice:

OMRON products are manufactured for use according to proper procedures by a qualified operator and only for the purposes described in this manual.

The following conventions are used to indicate and classify precautions in this manual. Always heed the information provided with them. Failure to heed precautions can result in injury to people or damage to property.

⚠ DANGER Indicates an imminently hazardous situation which, if not avoided, will result in death or serious injury.

⚠ WARNING Indicates a potentially hazardous situation which, if not avoided, could result in death or serious injury.

⚠ Caution Indicates a potentially hazardous situation which, if not avoided, may result in minor or moderate injury, or property damage.

OMRON Product References

All OMRON products are capitalized in this manual. The word “Unit” is also capitalized when it refers to an OMRON product, regardless of whether or not it appears in the proper name of the product.

The abbreviation “Ch,” which appears in some displays and on some OMRON products, often means “word” and is abbreviated “Wd” in documentation in this sense.

The abbreviation “PLC” means Programmable Controller. “PC” is used, however, in some Programming Device displays to mean Programmable Controller.

Visual Aids

The following headings appear in the left column of the manual to help you locate different types of information.

Note Indicates information of particular interest for efficient and convenient operation of the product.

1,2,3... 1. Indicates lists of one sort or another, such as procedures, checklists, etc.

© OMRON, 2003

All rights reserved. No part of this publication may be reproduced, stored in a retrieval system, or transmitted, in any form, or by any means, mechanical, electronic, photocopying, recording, or otherwise, without the prior written permission of OMRON.

No patent liability is assumed with respect to the use of the information contained herein. Moreover, because OMRON is constantly striving to improve its high-quality products, the information contained in this manual is subject to change without notice. Every precaution has been taken in the preparation of this manual. Nevertheless, OMRON assumes no responsibility for errors or omissions. Neither is any liability assumed for damages resulting from the use of the information contained in this publication.

Unit Versions of Open Network Controllers

Unit Versions

A "unit version" has been introduced to manage Open Network Controllers (ITNC-EPX01 and ITNC-EPX01-DRM) according to differences in functionality accompanying product upgrades.

1. Notation of Unit Versions on Products

Products that are being managed using unit versions have the unit version given in the format "Ver. □.□" on the nameplate. (Refer to the following figure for the position of the nameplate.)

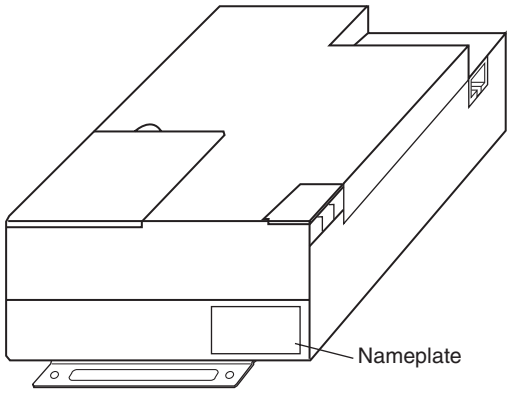

- Unit versions starts from version 1.1. A unit version is not given on the nameplate for products prior to version 1.1.
- Units without a unit version are called "Pre-Ver. 1.1 Units."

2. Confirming Unit Versions with Web Service Version 2.0

The unit version is given in the *Open Network Controller Version* row the first table displayed for the System Profile display of Web Service Version 2.

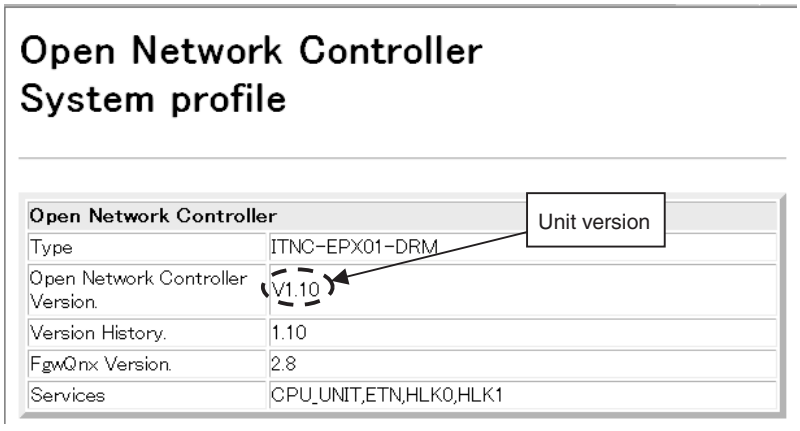

The unit version of Open Network Controllers for which a unit version is not given on the nameplate will be given as V1.00. For details on using the Web Service Ver. 2, refer to SECTION 17.

3. Using Unit Version Labels

The unit version labels shown below are included with the product.

Attach these labels to the Open Network Controllers to distinguish from earlier Open Network Controllers without unit versions.

Unit Version Notation

The Open Network Controller (ONC) is available in two basic types: ONC Version 1 and ONC Version 2. "ONC Version 1" and "ONC Version 2" are product names, and "Version 1" and "Version 2" in these product names do not refer to the unit version.

This manual uses the notation "Version □.□" to give the unit version to avoid confusion with "Version 1" and "Version 2" in the product names.

Supported Functionality According to Unit Version

Yes: Supported, ---: Not supported, Restricted: Limited support

Function	Pre-Ver. 1.1	Unit Ver. 1.1 or later	Reference page
CLOCK WRITE command (07 02)	Executed without stopping OS tick interrupt	Executed with OS tick interrupts prohibited and then enables interrupts	109
TIME COMPENSATION command (07 03)	---	Yes	110
FinsLink Ver. 1.30	--- (The Module can be downloaded from the website and updated.)	Yes	SECTION 16
Diskspace utility	---	Yes	293
Diskspace Setup Utility	---	Yes	294

Changes to QNX Startup File

Part of the /usr/config/sysinit.1 file has been changed in upgrading to unit version 1.1. If you have changed the /usr/config/sysinit.1 file, confirm the effects of the upgrade on your application.

A script file called /usr/Tool/bin/onc_command has been provided so that the user can execute application-specific commands during ONC startup. Although previously such commands were directly written to the sysinit.1 file, all user commands should now be placed in the onc_command file.

About this Manual:

This manual describes the installation and operation of version 2 of the Open Network Controllers (ONC Ver. 2) and includes the sections described below. The ONC Ver. 2 provide an FINS gateway function that enables connecting personal computers on an Ethernet network to OMRON PLCs, OMRON components, and DeviceNet-compatible devices.

Please read this manual and all related manuals carefully and be sure you understand the information provided before attempting to install and operate an ONC Ver. 2.

Section 1 provides an overview of the ONC Ver. 2, including its components, the basic application procedure, operating environment, optional software precautions, and communications frame length.

Section 2 provides an overview of the optional software available for use with the Open Network Controller.

Section 3 provides information on the hardware components, installation, and settings of the Open Network Controller.

Section 4 describes the various methods that can be used to set the contents of the environment setup files for the Open Network Controller.

Section 5 individually describes the FINS commands and responses for CPU_UNIT and the network providers. Refer to the *FINS Commands Reference Manual* (W227) for further information on FINS commands.

Section 6 describes the SPR_UNIT ONC system status network provider.

Section 7 describes the ETN_UNIT Ethernet network provider.

Section 8 describes the CLK_UNIT Controller Link network provider

Section 9 describes the SLK_UNIT SYSMAC LINK network provider.

Section 10 describes the BUSCS1_UNIT CS1 Bus connection network provider.

Section 11 describes the DRM_UNIT DeviceNet network provider.

Section 12 describes the HLK_UNIT serial network provider.

Section 13 describes the Hsv_UNIT PT connection service network provider.

Section 14 describes the RCOM_UNIT RemoteCOM connection network provider.

Section 15 shows the settings for an example system configuration.

Section 16 describes the FLK_UNIT (FinsLink) FLK network provider.

Section 17 describes the Web Service Version 2 used for remote maintenance of the Open Network Controller from a Web browser.

Section 18 describes the setup files.

Section 19 provides information for troubleshooting problems that might occur with the Open Network Controller.

The ***Appendices*** provide product specifications, connector signal arrangements, information on logging on to the Open Network Controller, and the battery replacement procedure.

⚠WARNING Failure to read and understand the information provided in this manual may result in personal injury or death, damage to the product, or product failure. Please read each section in its entirety and be sure you understand the information provided in the section and related sections before attempting any of the procedures or operations given.

TABLE OF CONTENTS

PRECAUTIONS xvii

1 Intended Audience xviii
2 General Precautions xviii
3 Safety Precautions xviii
4 Operating Environment Precautions xix
5 Application Precautions xx
6 Conformance to EC Directives xxiii

SECTION 1
Introduction 1

1-1 Overview 2
1-2 Components 6
1-3 Function Overview 8
1-4 Setting Tool 27
1-5 Operating Environment 28
1-6 Optional Software Precautions 29
1-7 Precautions when Changing from an ITNC-EIS01/EIX01(-DRM/-CST) 31
1-8 Basic Application Procedure 33
1-9 Communications Frame Length 33

SECTION 2
Optional Software Overview 35

2-1 List of Optional Software 36
2-2 Data Collection/Distribution Service Software 36
2-3 DataBaseToolKit Software 39
2-4 RemoteKit Software 41
2-5 Overview of Non-OMRON PLC Connection Unit 43

SECTION 3
Hardware 45

3-1 Nomenclature and Functions 46
3-2 DIP Switch Settings 49
3-3 Mounting Expansion Boards 52
3-4 Installing the Open Network Controller 55
3-5 Connecting the Power Supply Cable 59
3-6 Connecting COM Port Cables 61
3-7 Connecting DeviceNet Cables 67
3-8 Connecting Ethernet Cables 74
3-9 Handling Memory Cards 75

TABLE OF CONTENTS

SECTION 4
Software Settings (Basic) 79

4-1 Overview 80
4-2 LAN Settings (IP Address) 80
4-3 Basic Setting Tool Operations 84
4-4 Setting Menu List 92
4-5 Menu Setting 93
4-6 Setting IP Addresses 95
4-7 Setting Startup Services 96
4-8 Serial Port Settings 98

SECTION 5
CPU_UNIT 99

5-1 Overview of CPU_UNIT Functions 100
5-2 FINS Commands Addressed to CPU_UNIT 101

SECTION 6
SPR_UNIT (ONC System Status Network Provider) 113

6-1 Overview 114
6-2 SPR_UNIT (ONC System Status NP) Settings 115
6-3 FINS Commands Addressed to SPR_UNIT 118

SECTION 7
ETN_UNIT (Ethernet Network Provider) 123

7-1 ETN_UNIT Functions 124
7-2 ETN_UNIT Hardware Settings 124
7-3 ETN_UNIT Settings 124
7-4 FINS Commands Addressed to ETN_UNIT 126

SECTION 8
CLK_UNIT (Controller Link Network Provider) 131

8-1 CLK_UNIT Functions 132
8-2 CLK_UNIT Hardware Settings 133
8-3 CLK_UNIT Settings 133
8-4 Controller Link Status Area 135
8-5 FINS Commands Addressed to CLK_UNIT 139

TABLE OF CONTENTS

SECTION 9
SLK_UNIT (SYSMAC LINK Network Provider). 141

9-1 SLK_UNIT Functions 142
9-2 SLK_UNIT Hardware Settings 143
9-3 SLK_UNIT Settings 143
9-4 SYSMAC LINK Status Area. 145
9-5 FINS Commands Addressed to SLK_UNIT 149

SECTION 10
BUSCS1_UNIT (CS1 Bus Connection Network Provider). 151

10-1 BUSCS1_UNIT Functions: Connecting to the PLC 152
10-2 BUSCS1 Hardware Settings 154
10-3 CS1 Settings 155
10-4 BUSCS1 Settings. 156
10-5 BUSCS1_UNIT Status Area 159
10-6 FINS Commands Addressed to BUSCS1_UNIT 159
10-7 FINS Commands Addressed to the CPU Bus Unit 160

SECTION 11
DRM_UNIT (DeviceNet Network Provider) 163

11-1 DRM_UNIT Functions 164
11-2 DRM_UNIT Hardware Settings 165
11-3 DRM_UNIT Settings. 166
11-4 DeviceNet Status Area. 173
11-5 FINS Commands Addressed to DRM_UNIT 180

SECTION 12
HLK_UNIT (Serial Network Provider) 185

12-1 HLK_UNIT Functions. 187
12-2 HLK Hardware Settings 191
12-3 HLK_UNIT Settings 191
12-4 FINS Commands Addressed to Devices via HLK_UNIT. 197
12-5 FINS Commands Addressed to the ID Controller. 229
12-6 FINS Commands Addressed to TP700 Productivity Monitors 235
12-7 FINS Commands Addressed to TP710 Productivity Monitor. 239

SECTION 13
Hsv_UNIT (PT Connection Service Network Provider). . . 251

13-1 Hsv_UNIT (PT Connection Service) 252
13-2 Connecting Cables for PT Connections. 253
13-3 Setting the PT Connection Service 253

TABLE OF CONTENTS

SECTION 14
RCOM_UNIT (RemoteCOM Connection Network Provider) 259

14-1 Overview of RemoteCOM Functions 260
14-2 Hardware Settings for RemoteCOM 262
14-3 RemoteCOM Setup 265
14-4 FINS Commands Addressed to RCOM_UNIT 271

SECTION 15
Setup Examples 277

15-1 Example Configuration 278
15-2 Ethernet Settings 279
15-3 COM Port Settings 279
15-4 FINS Startup Services 280
15-5 Ethernet Network Provider Settings 280
15-6 DeviceNet Network Provider Settings 281
15-7 Controller Link Network Provider Settings 283
15-8 HLK (Host Link) Network Provider Settings 284

SECTION 16
Utilities 287

16-1 FinsLink 288
16-2 FinsLink Hardware Settings 289
16-3 FinsLink Settings 289
16-4 Diskspace Utility (Unit Ver. 1.1 or Later) 293
16-5 Diskspace Settings (Unit Ver. 1.1 or Later) 294

SECTION 17
Web Service Version 2 Maintenance Menu 297

17-1 Overview 298
17-2 Displaying and Editing Setup Files 301
17-3 Reboot 306
17-4 Error Log 308
17-5 Monitoring LED Indicators 309
17-6 System Profile 310
17-7 Task List 311
17-8 Disk Information 311
17-9 Time Data Check 312
17-10 Clock Adjustment 312

TABLE OF CONTENTS

SECTION 18
Setup Files 315

18-1 Overview of Setup Files 316
18-2 Basic Setup Files 317
18-3 ETN_UNIT Setup File: Ethernet Settings 330
18-4 CLK_UNIT Setup File: Controller Link Settings 331
18-5 SLK_UNIT Setup File: SYSMAC LINK Settings 332
18-6 BUSCS1 Setup File 333
18-7 DRM_UNIT Settings 335
18-8 HLK_UNIT Setup File 339
18-9 PT Connections Service Setup File 341
18-10 RemoteCOM Setup File: /etc/FgwQnxRCOM.ini 343
18-11 FinsLink Setup File: /etc/FgwQnx/FgwQnxFlk0.ini 347
18-12 Diskspace Setup Files 348

SECTION 19
Troubleshooting 349

19-1 Troubleshooting with FINS End Codes 350
19-2 Error Messages 358
19-3 DeviceNet Indicator Displays 394
19-4 Errors for RCOM_UNIT: Connection Process 398

Appendices

A Specifications 399
B Connector Signal Arrangements 401
C Logging on to the Open Network Controller 403
D Replacing the Backup Battery 409

Revision History 411

TABLE OF CONTENTS

PRECAUTIONS

This section provides precautions for using version 2 of the Open Network Controller (ONC Ver. 2) and related devices.

The information contained in this section is important for the safe and reliable application of the ONC Ver. 2. You must read this section and understand the information contained before attempting to set up or operate an ONC Ver. 2.

1 Intended Audience xviii
2 General Precautions xviii
3 Safety Precautions xviii
4 Operating Environment Precautions. xix
5 Application Precautions xx
6 Conformance to EC Directives. xxiii

1 Intended Audience

This manual is intended for the following personnel, who must also have knowledge of electrical systems (an electrical engineer or the equivalent).

- Personnel in charge of installing FA systems.
- Personnel in charge of designing FA systems.
- Personnel in charge of managing FA systems and facilities.
- Personnel with an understanding of TCP/IP applications technology.

2 General Precautions

The user must operate the Open Network Controller according to the performance specifications described in the operation manuals.

Before using an Open Network Controller under conditions which are not described in the manual or applying an Open Network Controller to nuclear control systems, railroad systems, aviation systems, vehicles, combustion systems, medical equipment, amusement machines, safety equipment, and other systems, machines, and equipment that may have a serious influence on lives and property if used improperly, consult your OMRON representative.

Make sure that the ratings and performance characteristics of the Open Network Controller are sufficient for the systems, machines, and equipment, and be sure to provide the systems, machines, and equipment with double safety mechanisms.

This manual provides information for programming and operating the Open Network Controller. Be sure to read this manual before attempting to use an Open Network Controller and keep this manual close at hand for reference during operation.

⚠ **WARNING** It is extremely important that an Open Network Controller be used for the specified purpose and under the specified conditions, especially in applications that can directly or indirectly affect human life. You must consult with your OMRON representative before applying an Open Network Controller System to the above-mentioned applications.

3 Safety Precautions

⚠ **WARNING** Do not attempt to take an Open Network Controller apart while the power is being supplied. Doing so may result in electric shock.

⚠ **WARNING** Do not touch any of the terminals while the power is being supplied. Doing so may result in electric shock.

⚠ **WARNING** Fail-safe measures must be taken by the customer to ensure safety in the event of incorrect, missing, or abnormal signals caused by broken signal lines, momentary power interruptions, or other causes. Operating errors may results in serious accidents.

⚠ **WARNING** Interlock circuits, limit circuits, and similar safety measures in external circuits (i.e., not in the Open Network Controller or a Programmable Controller) must be provided by the customer. Operating errors may results in serious accidents.

⚠ **Caution** Execute online edit only after confirming that no adverse effects will be caused by extending the cycle time. Otherwise, the input signals may not be readable.

⚠ **Caution** Confirm safety at the destination node before transferring a program to another node or changing contents of the I/O memory area. Doing either of these without confirming safety may result in injury.

⚠ **Caution** Tighten the terminal screws on the power supply to the torque specified in the operation manual. The loose screws may result in burning or malfunction.

⚠ **Caution** Always turn OFF the power supply to the Open Network Controller before attempting any of the following. Not turning OFF the power supply may result in malfunction or electric shock.

- Setting DIP switches or rotary switches.
- Replacing the battery.
- Performing any other operation that requires touching the controls of the Open Network Controller.

4 Operating Environment Precautions

⚠ **Caution** Do not operate the control system in the following locations:

- Locations subject to direct sunlight.
- Locations subject to temperatures or humidity outside the range specified in the specifications.
- Locations subject to condensation as the result of severe changes in temperature.
- Locations subject to corrosive or flammable gases.
- Locations subject to dust (especially iron dust) or salts.
- Locations subject to exposure to water, oil, or chemicals.
- Locations subject to shock or vibration.

⚠ **Caution** Take appropriate and sufficient countermeasures when installing systems in the following locations:

- Locations subject to static electricity or other forms of noise.
- Locations subject to strong electromagnetic fields.
- Locations subject to possible exposure to radioactivity.
- Locations close to power supplies.

⚠ **Caution** Install the Boards in the Open Network Controllers properly as specified in the following operation manuals. Improper installation of the Boards may result in malfunction.

Model number	Manual name	Cat. No.
3G8F7-CLK12/CLK52/CLK21(-V1)	Controller Link Support Board Operation Manual	W383
	Controller Link Support Board Installation Guide	W388
3G8F7-SLK11/SLK21	PCI SYSMAC LINK Support Board Operation Manual	W390
	PCI SYSMAC LINK Support Board Installation Guide	W389
ITBC-CST01	CS1 Bus Interface Board Operation Manual	V211
---	DeviceNet Operation Manual	W267

⚠ **Caution** The operating environment of the Open Network Controller System will have a large effect on the longevity and reliability of the system. Improper operating environments can lead to malfunction, failure, and other unforeseeable problems with the Open Network Controller System. Be sure that the operating environment is within the specified conditions at installation and remains within the specified conditions during the life of the system.

5 Application Precautions

Observe the following precautions when using the Open Network Controller System.

- Always use the power supply voltages specified in the operation manuals. An incorrect voltage may result in malfunction or burning.
- Take appropriate measures to ensure that the specified power with the rated voltage and frequency is supplied. Be particularly careful in places where the power supply is unstable. An incorrect power supply may result in malfunction.
- Install external breakers and take other safety measures against short-circuiting in external wiring. Insufficient safety measures against short-circuiting may result in burning.
- Do not apply voltages to the Input Units in excess of the rated input voltage. Excess voltages may result in burning.
- Do not apply voltages or connect loads to the Output Units in excess of the maximum switching capacity. Excess voltage or loads may result in burning.

- Disconnect the functional ground terminal when performing withstand voltage tests. Not disconnecting the functional ground terminal may result in burning.
- Always connect to a ground of 100 Ω or less when installing the Open Network Controllers. Not connecting to a ground of 100 Ω or less may result in electric shock.
- Always turn OFF the power supply to the Open Network Controller and the PLC before attempting any of the following. Not turning OFF the power supply may result in malfunction or electric shock.
    - Mounting or dismounting I/O Units, CPU Units, Memory Cassettes, or any other Units.
    - Assembling the Units.
    - Setting DIP switches or rotary switches.
    - Connecting cables or wiring the system.
    - Connecting or disconnecting the connectors.
- Do not attempt to disassemble, repair, or modify any Units.
- The mounting screws, terminal screws, and cable connector screws must be tightened to the torque specified in the relevant manuals on both the Open Network Controller and the PLC. Incorrect tightening torque may result in malfunction.
- Do not allow foreign matter to enter the Open Network Controller when wiring.
- Leave the label attached to the I/O Units when wiring. Removing the label may result in malfunction if foreign matter enters the Unit.
- Remove the label after the completion of wiring to ensure proper heat dissipation. Leaving the label attached may result in malfunction.
- Use crimp terminals for wiring. Do not connect bare stranded wires directly to terminals. Connection of bare stranded wires may result in burning.
- Wire all connections correctly.
- Double-check all wiring and switch settings before turning ON the power supply. Incorrect wiring may result in burning.
- Mount I/O Units only after checking terminal blocks and connectors completely.
- Be sure that the terminal blocks, Memory Units, expansion cables, and other items with locking devices are properly locked into place. Improper locking may result in malfunction.
- Check the user program for proper execution before actually executing it. Not checking the program may result in unexpected operation.
- Resume operation only after transferring to the new CPU Unit or Open Network Controller the contents of the DM Area, HR Area, and other data required for resuming operation. Not doing so may result in an unexpected operation.
- Do not place objects on any cables.
- Use the correct power supply voltage.
- Do not bend cables past their natural bending radius or pull on them.

- Confirm that no adverse effect will occur in the system before attempting any of the following. Not doing so may result in an unexpected operation.
  - Changing the operating mode of the PLC.
  - Force-setting/force-resetting any bit in memory.
  - Changing the present value of any word or any set value in memory.
- Touch the Units only after first touching a grounded metal object to discharge any static electricity from your body.
- Do not remove the Memory Card while data is being accessed. Doing so may damage the file being written.
- Do not turn OFF the power supply while the Memory Card while data is being accessed. Doing so may damage the files on the Card.
- Do not turn OFF the power supply while data is being written to the internal flash disk. Doing so may damage the files on the Card.
- Also, do not turn OFF the power supply or remove the Memory Card when the Card is being accessed. Data files may be lost.
- Maintain the operating environment for the Memory Cards (such as the ambient operating temperature and other conditions). Request operating environment conditions from the manufacture of the card. OMRON is not responsible for the operation of any memory cards produced by other manufacturers.
- We recommend making a backup of the internal disk to prevent losing the data inadvertently, e.g., by mistakenly deleting it.
- When the CS1 Bus Interface Board is being used, the PLC will not start operation even after the power supply is turned ON until the CS1 Bus Interface in the Open Network Controller completes initialization. The Open Network Controller requires approximately 25 seconds to start operation after the power supply is turned ON. You must design the system to allow for this delay.
- Also, if the power supply to the Open Network Controller is interrupted during operation, the PLC will detect an I/O bus error. You must design the system to allow for this possibility.
- Do not short the battery terminals or charge, disassemble, apply pressure to, heat, or incinerate the battery. Do not subject the battery to strong shocks. Doing any of these may result in leakage, rupture, heat generation, or ignition of the battery. Batteries that have been subjected to shock may leak if they are used.
- UL standard require that batteries be replaced only by experienced technical personnel. Do not allow inexperienced or non-technical personnel to replace batteries.
- The accuracy of the clock built into the Open Network Controller varies with the temperature. Design the system to allow for error in the time information from the Open Network Controller.
- Only Memory Cards manufactured by OMRON can be used in the Memory Card slot. Modem cards and Ethernet cards, which are not Memory Cards, cannot be used. Do not insert anything but Memory Cards into the Memory Card slot.
- There are four COM ports for ONC Ver. 2 (ITNC-EPX01(-DRM). COM3 is RS-232C and COM4 is RS-422A/485. In this respect, the port configuration differs from ONC Ver. 1 (ITNC-EIS01/EIX01(-DRM/-CST)).

- Memory Cards in QNX format are mounted on /kd direction. For ONC Ver. 1 (ITNC-EIS01/EIX01(-DRM/-CST), the mount directory was /hd. The ONC Ver. 2 (ITNC-EPX01(-DRM) uses /hd direction for the internal disk.
- Do not create files at the root directory (/ or /kd) that are constantly or periodically written, e.g., for data collection using the optional software Data Collection/Distribution Software (ITNC-DC1Q-CD-V2). If power is interrupted while a file is being written, other files and directories in the same directory as the file that is being written may be corrupted. Whenever possible, create special directories for files that are constantly or periodically written.

6 Conformance to EC Directives

The Open Network Controllers comply with EC Directives. To ensure that the machine or device in which an Open Network Controller is used complies with EC directives, the Open Network Controller must be installed as follows:

1,2,3...

1. The Open Network Controller must be installed within a control panel.
2. Reinforced insulation or double insulation must be used for the DC power supplies used for the communications and I/O power supplies.
3. The Open Network Controllers also conform to the Common Emission Standard (EN61000-6-4). When an Open Network Controller is built into a machine, however, the structure of the control panel, the relationships to other connected devices, wiring, and other variables can cause the overall machine to fail to meet the Standards. It is the responsibility of the final manufacturer to confirm that EC Directives have been met.

   The following are examples of countermeasures that can be taken to reduce noise.

1,2,3...

1. Place ferrite cores must on the communications cables to reduce noise given off by the cables.
2. Use power cables that are as thick and as short as possible in the control panel and ground properly to 100 Ω or less.
3. Use power cables that are as thick and as short as possible for DeviceNet communications cables and ground them properly to 100 Ω or less.

SECTION 1
Introduction

This section provides an overview of the Open Network Controller, including its components, the basic application procedure, operating environment, optional software precautions, and communications frame length.

1-1 Overview 2
1-1-1 Overview of Open Network Controller Version 2 2
1-1-2 Difference between Open Network Controller Versions 1 and 2. . . 5
1-2 Components 6
1-2-1 Open Network Controller Version 2 Components 6
1-2-2 ITNC-EPX01 6
1-2-3 ITNC-EPX01-DRM with DeviceNet 7
1-2-4 ITNC-DIN01 DIN Track Mounting Bracket 7
1-2-5 List of Supported Expansion Boards 7
1-3 Function Overview 8
1-3-1 Hardware Configuration. 8
1-3-2 Software Configuration 9
1-3-3 CPU_UNIT Functions 9
1-3-4 Network Provider Functions and Precautions 10
1-4 Setting Tool. 27
1-5 Operating Environment 28
1-5-1 ONC Java Applet Setting Tool for the ONC 28
1-5-2 Optional Software 29
1-6 Optional Software Precautions 29
1-6-1 RemoteKit Software (RTK) 29
1-6-2 Data Collection/Distribution Service Software (DCD) 29
1-6-3 DataBaseToolKit Software (DBTK) 30
1-6-4 Perl Provided with DBTK 30
1-6-5 RemoteCOM Software (RCOM) 30
1-6-6 Setting Links 30
1-7 Precautions when Changing from an ITNC-EIS01/EIX01(-DRM/-CST) . . . 31
1-8 Basic Application Procedure 33
1-9 Communications Frame Length 33

1-1 Overview

1-1-1 Overview of Open Network Controller Version 2

An Open Network Controller (abbreviated as ONC Ver. 2) provides a gateway for FINS message communications among the following devices:

- Personal computers, PLCs, or other nodes on an Ethernet network
- PLCs or other nodes on a Controller Link, Host Link, or SYSMAC I/O bus network
- OMRON FA components on a CompoWay/F network.
- Devices from OMRON or other manufacturers on a DeviceNet network

The following diagram illustrates the devices that can communicate through an Open Network Controller.

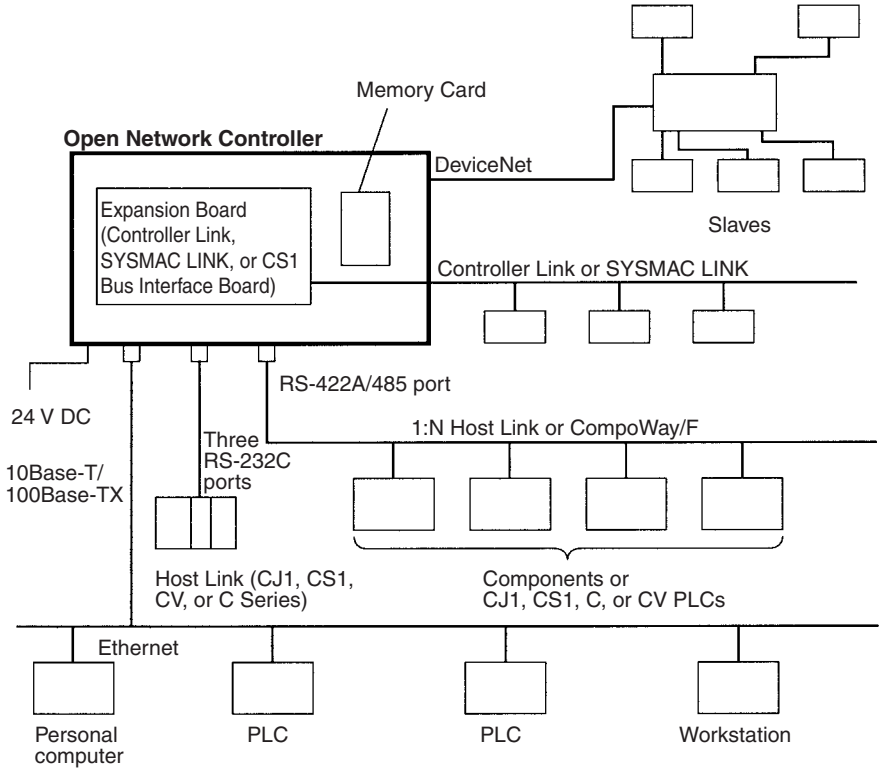

An Open Network Controller provides the following features.

- The Open Network Controller is smaller and more resistant to environmental conditions than personal or factory computers, allowing for a wider range of installation sites.
- A realtime OS supports a multitasking network environment.
- A 10Base-T/100Base-TX Ethernet port is provided on all models.
- The Open Network Controller converts FINS commands from personal computers, PLCs, or other nodes on an Ethernet network to Host Link commands, enabling FINS communications with PLCs (such as the CQM1, SRM1, C1000H/C2000H, and C20P) that do not support FINS commands directly.
- The Open Network Controller converts FINS commands from personal computers, PLCs, or other nodes on an Ethernet network to CompoWay/F commands, enabling FINS communications with CompoWay/F devices.

- The Open Network Controller converts FINS commands from personal computers, PLCs, or other nodes on an Ethernet network to explicit messages for DeviceNet-compatible devices manufactured by OMRON and by other companies (supported by ITNC-EPX01-DRM).

Read through this manual before actually configuring a system that uses an Open Network Controller.

Note

1. Optional software for the Open Network Controller is available, allowing applications to be used with only minimal settings. Refer to *SECTION 2 Optional Software Overview.*
2. Refer to *SECTION 15 Setup Examples* for information on setting the Open Network Controller operating environment explained using various network examples. This information is useful for understanding the setting procedures.

Supports Standard Information System Protocols

The Open Network Controller supports Web/Mail, Telnet, FTP, PPP, HTTP, and ActiveX applications. The Web can also be used to easily obtain onsite information in the required format.

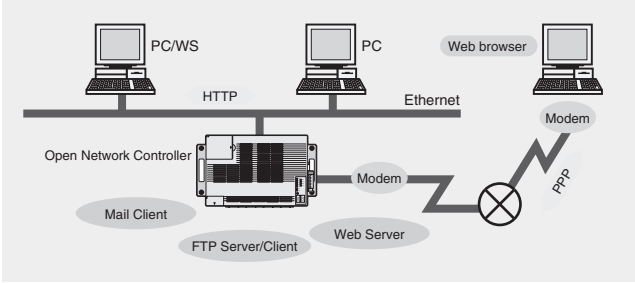

Supports OMRON Components

The Open Network Controller supports Ethernet, Controller Link, DeviceNet, serial, and CS1 Bus communications. DeviceNet Slaves, such as I/O Terminals, Valves, Inverters, Photoelectric Sensors, and Pushbutton Stations, can be connected to serial devices, such as PLCs, Temperature Controllers, Programmable Terminals, and Digital Panels, without extra programming.

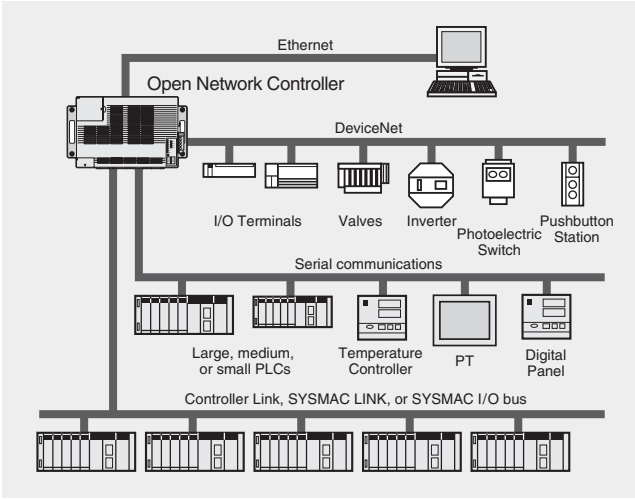

Superior Reliability in Harsh Environments

The small body, with moving parts such as fans and hard disks removed, is equipped with a realtime OS that is highly reliable. The Open Network Controller operates stably, and is designed to withstand harsh environments, with an ambient operating temperature of 0 to 55°C. The environment resistance can be further improved by using a panel and DIN Track.

Monitor Onsite Equipment from a Web Browser

Using the various optional software, onsite status can be monitored, set, and maintained from a Web browser on the network. This function allows rapid responses, such as changing settings. Errors in connected devices can also be detected and automatic notification can be provided using electronic mail. According to the usage method, various methods including VB/VBA applications, file transfer, and DBMS can be used to obtain, collect, and process data effectively and efficiently.

TCP/IP communications with UNIX or Windows computers are also possible.

Link to the Host Database System

The Open Network Controller can be used to easily record onsite raw data in general-purpose databases, such as Access or Oracle, by using the optional DataBaseToolKit software component. CSV files compiled using the Data Collection/Distribution Service Software can also be recorded and used.

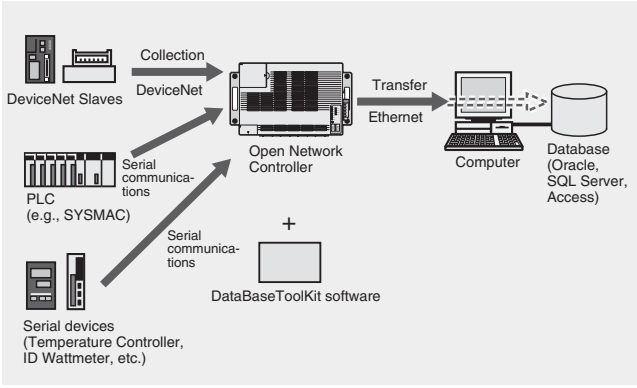

Remote Monitoring and Error Monitoring Using Dial-up Connections

Open Network Controllers can be used to transmit information remotely using various methods, such as PPP connections via modem/TA or LAN connections via dial-up routers.

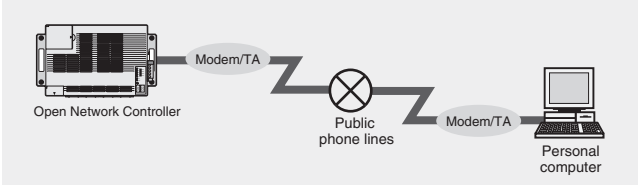

Using the RemoteKit software component allows e-mail to be sent to the user's e-mail address (including i-mode e-mail), and a maintenance system can be configured for equipment and machines using error notification mail. Using the pay-per-use system.

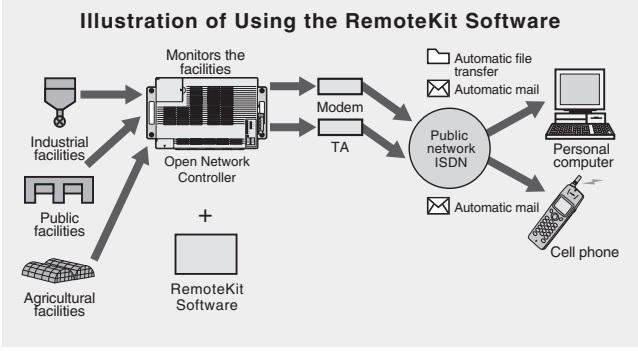

1-1-2 Difference between Open Network Controller Versions 1 and 2

This section outlines the differences between ONC Ver. 1 (ITNC-EIS01/EIX01(-DRM/-CST) and ONC Ver. 2.

Increased CPU Performance

The CPU operates with a clock that is twice as fast as ONC Ver. 1. A built-in floating-point decimal processor has also been added.

Ethernet 100Base-TX

The ONC Ver. 2 allows the Ethernet interface to be switched between 10Base-T and 100Base-TX, enabling even faster Ethernet communications.

PCI Bus Board

Although ISA Bus Boards can be used with ONC Ver. 1 Expansion Models (ITNC-EIX01(-DRM/-CST)), ONC Ver. 2 supports PCI Boards. Refer to *3-3 Mounting Expansion Boards* for the models that can be used.

Backup Memory

With version 2, the Open Network Controller's Event memory can be stored in backup memory. (The data in backup memory cannot be written directly.) Refer to *6-2 SPR_UNIT (ONC System Status NP) Settings* for details.

Four Times the Internal Disk Capacity

The capacity of the internal disk has been increased from 8 MB to 32 MB. The setting and maintenance tools used for the Open Network Controller have thus been pre-installed, and there is still 18 MB of free space available.

DeviceNet Master Function

Essentially the same DeviceNet master function as provided on OMRON's CS-series and CJ-series of PLCs has been added to the Open Network Controller, enabling it to be used as either a master or a slave.

Another Serial Interface

One RS-232C port has been added to the two RS-232C ports and one RS-422/RS-485 port of version 1 Expansion Models (ITNC-EIX01(-DRM/-CST)), to provide three RS-232C ports and one RS-422/RS-485 port

Twice the Main Memory

Memory has been increased from 16 MB to 32 MB.

Different Product Configuration

Caution is required because the product configuration has been changed between versions 1 and 2.

Open Network Controller version	Model number	Specifications
Version 1	ITNC-EIS01	Basic model, two COM ports, No ISA bus slot, No DeviceNet
	ITNC-EIS01-DRM	Basic model, two COM ports, No ISA bus slot, DeviceNet
	ITNC-EIX01	Expansion model, three COM ports, ISA bus slot, No DeviceNet
	ITNC-EIX01-DRM	Expansion model, three COM ports, ISA bus slot, DeviceNet
	ITNC-EIS01-CST	Basic model, two COM ports, No ISA bus slot, CS1 bus interface
	ITNC-EIX01-CST	Expansion model, three COM ports, ISA bus slot, CS1 bus interface
Version 2	ITNC-EPX01	Four COM ports, PCI bus slot, No DeviceNet
	ITNC-EPX01-DRM	Four COM ports, PCI bus slot, DeviceNet

Note The Memory Card mounting directory has been changed. For QNX-formatted Memory Cards, it is now /hd for version1 and /kd for version 2. With version 2,

/hd is used as an internal disk. If optional software is to be used, refer to *1-6 Optional Software Precautions*.

1-2 Components

1-2-1 Open Network Controller Version 2 Components

This section describes the components of an Open Network Controller. The following table lists the main components.

Model	Specifications
ITNC-EPX01	Expansion slot Four COM ports (three RS-232C and one RS-422A/485)
ITNC-EPX01-DRM	Expansion slot Four COM ports (three RS-232C and one RS-422A/485) DeviceNet interface
ITNC-DIN01	DIN Track Mounting Bracket

Note The expansion slot is a PCI bus slot into which either a Controller Link Board, SYSMAC LINK Board, or a CS1 Bus Interface Board can be mounted. Only one slot is provided.

Each model is described next. Open the packing boxes and make sure you have the correct models.

Reference Manuals

Model	Name	Cat. No.
ITNC-MD1Q-EF	Open Network Controller Connection Units for Non-OMRON PLCs (Mitsubishi A-series Computer Link Module) Operation Manual	V209-E1
ITNC-RK1Q-ECD	Open Network Controller RemoteKit Software Operation Manual	V221-E1
ITNC-DK1Q-ECD	Open Network Controller DataBase Software Operation Manual	V223-E1
ITNC-DL1Q-ECD-V2	Open Network Controller Data Collection/Distribution Service Software Version 2 Operation Manual	V225-E1

1-2-2 ITNC-EPX01

The ITNC-EPX01 is shown below. Use the illustration to confirm you have the correct model.

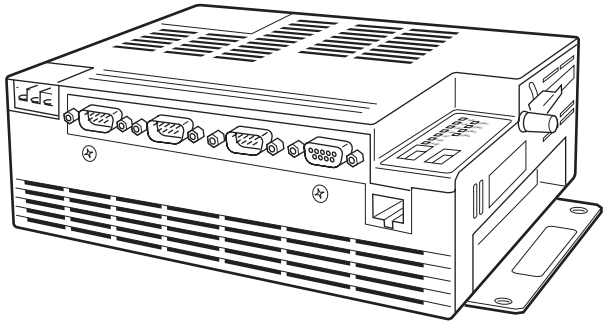

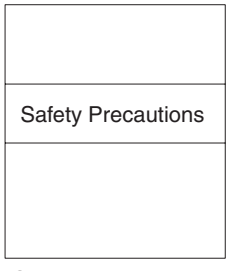

Safety Precautions

1-2-3 ITNC-EPX01-DRM with DeviceNet

The ITNC-EPX01-DRM with DeviceNet is shown below. Use the illustration to confirm you have the correct model.

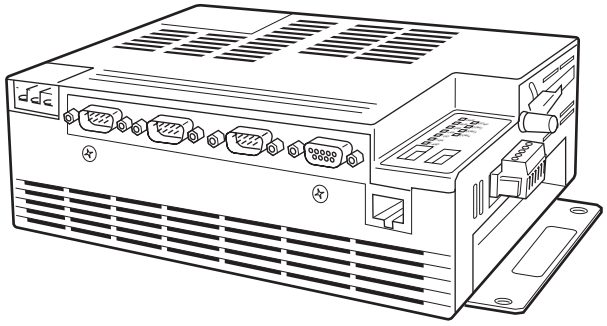

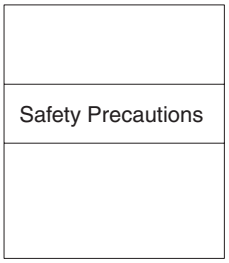

Safety Precautions

1-2-4 ITNC-DIN01 DIN Track Mounting Bracket

The ITNC-DIN01 DIN Track Mounting Bracket is shown below. Use the illustration to confirm you have the correct model.

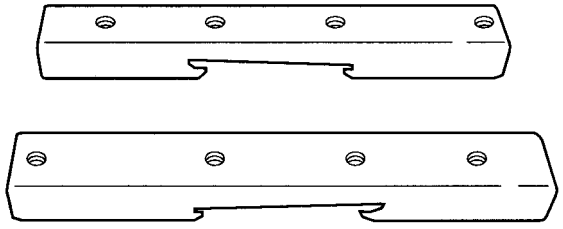

ITNC-DIN01
DIN Track Mounting Bracket

Four mounting screws

- The ITNC-DIN01 DIN Track Mounting Bracket is used when mounting an Open Network Controller to a DIN Track.
- Refer to *3-4 Installing the Open Network Controller* for details on installation methods.

1-2-5 List of Supported Expansion Boards

Any one Board from the following table can be installed in the Open Network Controller.

Expansion Board	Model
Controller Link Board	3G8F7-CLK12(-V1) 3G8F7-CLK52(-V1) 3G8F7-CLK21(-V1)
SYSMAC LINK Board	3G8F7-SLK11 3G8F7-SLK21
CS1 Bus Interface Board	ITBC-CST01

- Refer to *3-3 Mounting Expansion Boards* for details on installation methods.

Note Functions added for Controller Link Board V1 cannot be used.

1-3 Function Overview

1-3-1 Hardware Configuration

The configuration of an Open Network Controller is shown in the following diagram.

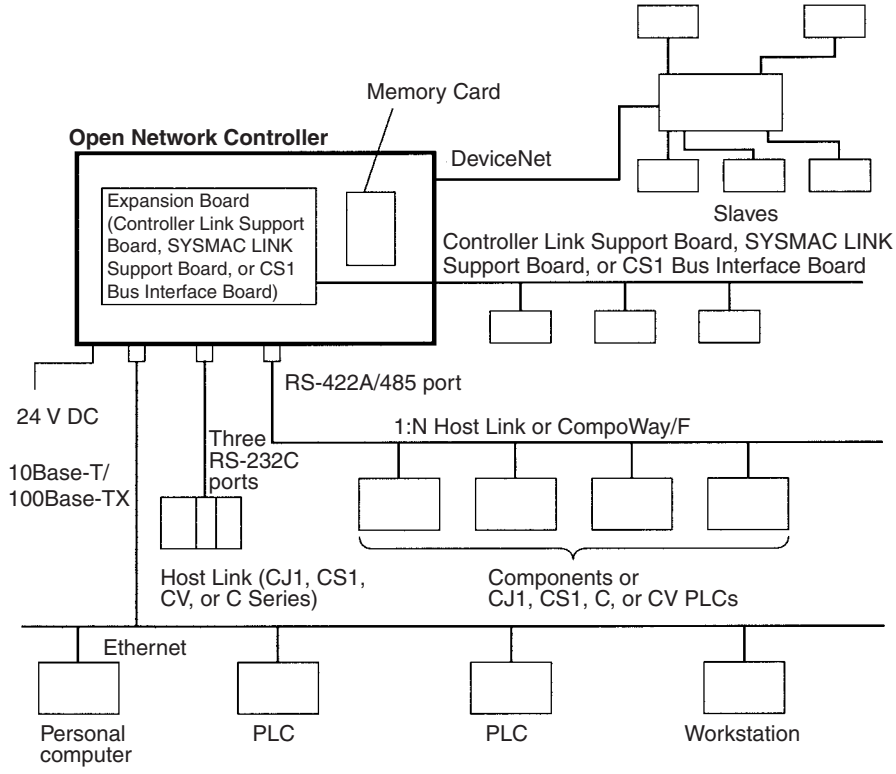

Note Refer to *SECTION 15 Setup Examples* for details on methods used to set the Open Network Controller operating environment explained using various networking examples.

1-3-2 Software Configuration

The software configuration of the Open Network Controller is illustrated below.

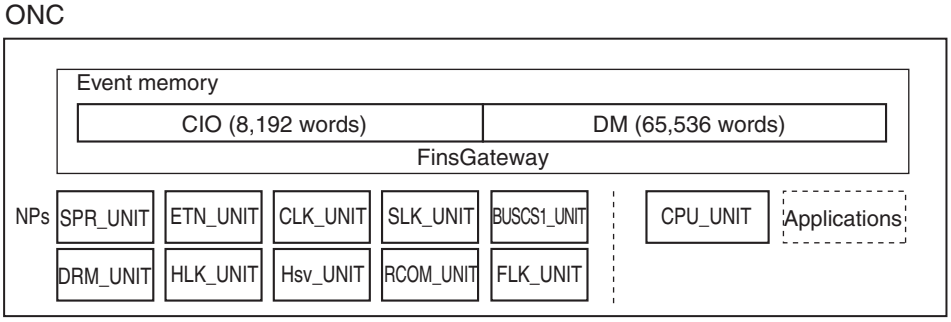

Component	Function
CPU_UNIT	CPU_UNIT provides the functions of a CPU Unit like a PLC. The variables in event memory can be read and written from personal computers and other devices on the networks by sending FINS commands. Ladder programs, however, cannot be run.
Event memory	The variables in event memory can be allocated to slave I/O on a DeviceNet network or to data links on a Controller Link, SYSMAC LINK, or CS1 BUS I/O network. The event memory contains memory with the same names (DM and CIO) as a PLC's memory areas.
NPs (Network Provider)	NP stands for Network Provider. The network providers function as Communications Units to provide network software services. Data is read or written by sending FINS commands to the network providers or by sending FINS commands to connected devices through the network providers. SPR_UNIT: ONC system status network provider ETN_UNIT: Ethernet network provider CLK_UNIT: Controller Link network provider SLK_UNIT: SYSMAC LINK network provider BUSCS1_UNIT: CS1 Bus Connection network provider DRM_UNIT: DeviceNet network provider HLK_UNIT: SYSWAY, SYSWAY CV, CompoWay/F, ID Controller, and Productivity Monitor network provider Hsv_UNIT: PT connection service network provider RCOM_UNIT: RemoteCOM connection network provider FLK_UNIT: FinsLink network provider
FinsGateway	FinsGateway performs communications between CPU_UNIT and the network providers, communications between network providers, and FINS routing. It also manages the event memory.

1-3-3 CPU_UNIT Functions

The CPU_UNIT is a software component that emulates the FINS message functions of the CPU Unit in a PLC. The event memory (i.e., the variable memory in the Open Network Controller) can be read and written from personal computers and other devices on the networks.

For details on the CPU_UNIT functions, refer to *SECTION 5 CPU_UNIT*.

FINS Commands Addressed to CPU_UNIT

The following FINS commands can be addressed to the CPU_UNIT.

Command code	Name and function
01 01	MEMORY AREA READ: Reads event memory
01 02	MEMORY AREA WRITE: Writes event memory
01 04	MULTIPLE MEMORY AREA READ: Reads multiple areas in event memory

Command code	Name and function
02 01	PARAMETER AREA READ: Reads the routing tables
02 02	PARAMETER AREA WRITE: Writes the routing tables
02 03	PARAMETER AREA CLEAR: Clears the routing tables
02 25	ROUTING TABLE SET
05 01	CONTROLLER DATA READ
05 02	CONNECTION DATA READ
07 01	CLOCK READ
07 02	CLOCK WRITE
07 03	TIME COMPENSATION (unit version 1.1 or later)
08 01	INTERNODE ECHO TEST

Note FINS commands addressed to the CPU_UNIT must be sent through a network provider.

Event Memory

Event memory is the internal memory for FinsGateway. It contains memory with the same names (DM and CIO) as a PLC's memory areas. Just like the CIO and DM areas in a PLC, the event memory can be allocated to DeviceNet slave I/O data, Controller Link or SYSMAC LINK data links, or for other purposes. In addition, CS1 CPU Unit I/O can be allocated via the CS1 bus interface. Event memory can be accessed by using FINS commands. An example is given below. The size of the event memory is 65,536 words for DM and 8,192 words for CIO.

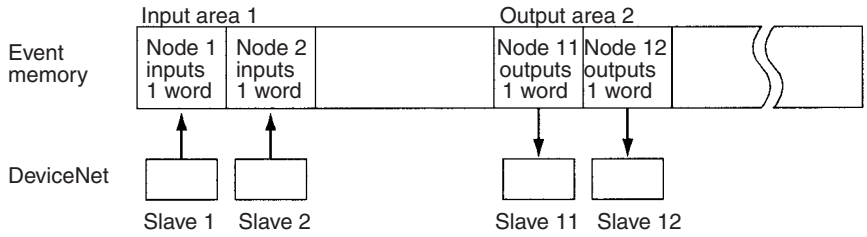

It would be possible to read or write the I/O data for more than one DeviceNet slave using a single FINS command.

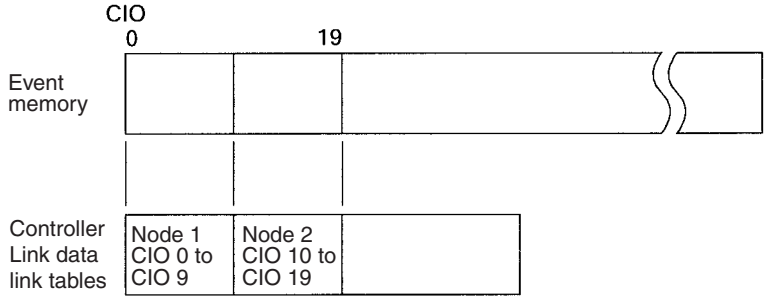

Data link areas are allocated in event memory according to settings for the data link tables. Use the CX-Net to set the data link areas.

1-3-4 Network Provider Functions and Precautions

The network providers (NPs) are software components that provide the software functions for networks just like Communications Units do for PLCs. The network providers correspond to PLC Units. Data can be read and written by addressing FINS commands from the computer connected to the Open Network Controller to the network providers, or to the CPU_UNIT through a network provider.

The FINS commands that can be addressed to each network provider and the precautions for the network provider are described next.

List of Network Providers

Network provider	Function	Reference
SPR_UNIT (ONC system status network provider)	A software component used to access the backup memory (SRAM) and manage the battery. This function is supported by ONC Ver. 2 and later.	*SECTION 6 SPR_UNIT (ONC System Status Network Provider)*
ETN_UNIT	A software component that functions like a Communications Unit to connect to the Ethernet. This software is not required when FINS commands are not used on the Ethernet.	*SECTION 7 ETN_UNIT (Ethernet Network Provider)*
CLK_UNIT	A software component that functions like a Communications Unit to connect to a Controller Link network through a Controller Link Support Board.	*SECTION 8 CLK_UNIT (Controller Link Network Provider)*
SLK_UNIT	A software component that functions like a Communications Unit to connect to a SYSMAC LINK network through a SYSMAC LINK Support Board.	*SECTION 9 SLK_UNIT (SYSMAC LINK Network Provider)*
BUSCS1_UNIT	A software component that is used to perform FINS communications and I/O communications (CS1 bus connection) with CS1 PLCs through a CS1 Bus Interface Board.	*SECTION 10 BUSCS1_UNIT (CS1 Bus Connection Network Provider)*
DRM_UNIT	A software component that functions like a Communications Unit to connect to DeviceNet.	*SECTION 11 DRM_UNIT (DeviceNet Network Provider)*
HLK_UNIT	A software component for converting FINS commands into the following serial communications protocols. SYSWAY, SYSWAY CV, CompoWay/F, ID Controllers (V600/V620 Series), and Productivity Monitors (TP700-B1, TP700-B2, or TP710-A)	*SECTION 12 HLK_UNIT (Serial Network Provider)*
Hsv_UNIT (PT connection service network provider)	A software component used to connect serially to a PT (Programmable Terminal).	*SECTION 13 Hsv_UNIT (PT Connection Service Network Provider)*
RCOM_UNIT	The RemoteCOM Unit (RCOM_UNIT) is a software component used to enable the RS-232C port on an INTC-SGB01 SerialGateBox to be used as an Open Network Connector serial port.	*SECTION 14 RCOM_UNIT (RemoteCOM Connection Network Provider)*
FLK_UNIT (FinsLink)	A software component used to read information (DM Area and CIO Area words) from PLCs connected to the Open Network Connector through serial and Ethernet communications using FINS commands. It is also used to form virtual data links with the event memory (DM and CIO) in the Open Network Connector. When FinsLink is used, virtual data links are possible between the Open Network Controller and PLCs connected to all networks supported by the Open Network Controller.	*SECTION 16 Utilities*

The following pages explain the functions and limitations of each of the network providers listed in the above table. For details on each network provider, refer to the appropriate section indicated in the *Reference* column of the table.

SPR_UNIT (ONC System Status Network Provider)

The SPR_UNIT is a software component that is used to access the backup memory (SRAM) and manage the battery. The functions of the SPR_UNIT are described below.

Memory Unit

The SPR_UNIT is able to hold the event memory (DM and CIO) status in SRAM even when the Open Network Controller power is turned OFF. The DM and CIO are not held, but, rather, the status of event memory (DM and CIO) specified over a specific period is held in the SRAM. This SRAM is called backup memory. SRAM cannot be accessed directly from the Open Network Controller application software. To access SRAM, send a FINS command to the SPR_UNIT.

- Backup
  Specific portions of event memory (DM and CIO) can be backed up to the backup memory (SRAM) periodically using refresh cycles set with the Setting Tool. The capacity of backup memory is 65214 words. In the default settings, however, 9 words beginning from word 65205 are allocated as the status area.
- Restore
  The backup memory (SRAM) is copied to the event memory (DM and CIO). (Specify whether to execute at startup of the Open Network Controller, or at a user-specified time.)

The backup or restore operation can also be performed by turning ON status map bits. (Refer to *6-2-4 List Map*.)

Status Memory

The status memory is used to periodically write the following status to the specified area (DM, CIO, or SRAM) at the interval specified with the Setting Tool.

1. Indicator ON/OFF status (RUN, ERR, and CARD)
2. DIP switch ON/OFF status (pin 1 and pin 2)
3. Battery ON/OFF (normal/error)

Clock Memory

The clock memory is used to write the current date and time of the Open Network Controller in the event memory (DM and CIO) at the refresh cycle specified with the Setting Tool.

Shutdown

The shutdown function is used to restart the Open Network Controller when the event memory bit specified with the Setting Tool turns ON.

Error Log

The error information displayed on the 7-segment display is saved in the SRAM (up to 64 errors). FINS commands are used to read the error log. Past errors are saved even if the Open Network Controller power is turned OFF.

FINS Service

Data from the backup memory (SRAM) is read or written using FINS commands. The following FINS commands are supported.

Command code	Name
01 01	BACKUP MEMORY READ
01 02	BACKUP MEMORY WRITE
21 02	ERROR LOG READ
21 03	ERROR LOG CLEAR

ETN_UNIT

The ETN_UNIT is a software component that functions like a Communications Unit to connect to an Ethernet network. The ETN_UNIT is not required if FINS commands are not used on the Ethernet.

FINS Commands Addressed to ETN_UNIT

The following FINS commands can be addressed to the ETN_UNIT.

Command code	Name
05 01	CONTROLLER DATA READ
27 50	IP ADDRESS TABLE WRITE
27 60	IP ADDRESS TABLE READ
27 65	ADDRESS DATA READ

Precautions

- The IP address of the Open Network Controller is set in software. Refer to *4-2 LAN Settings (IP Address)*. The default address is 10.0.0.1 with a subnet mask of 255.0.0.0.
- FINS communications use the UDP protocol. Confirm the reception of FINS commands by processing the FINS responses in the application program.
- FINS communications will not be possible with nodes that are not registered in the IP address table. The address of the destination node must be registered in the IP address tables of both nodes involved in FINS communications.
- The IP fragmentation queue in the Open Network Controller can contain up to 200 entries. Each buffer is 4 Kbytes.
- FINS node address 255 cannot be used for IP broadcast transmissions.

CLK_UNIT

The CLK_UNIT is a software component that functions like a Communication Unit to connect to a Controller Link network through a Controller Link Support Board.

FINS Commands Addressed to CLK_UNIT

The following FINS commands can be addressed to the CLK_UNIT (i.e., to the Controller Link Support Board). Data link areas are set using the CX-Net.

Command code		Data links		Name
		Active	Stopped	
04	01	Not valid	OK	RUN
	02	OK	Not valid	STOP
05	01	OK	OK	CONTROLLER DATA READ
06	01	OK	OK	CONTROLLER STATUS READ
	02	OK	OK	NETWORK STATUS READ
	03	OK	OK	DATA LINK STATUS READ
08	01	OK	OK	LOOPBACK TEST
	02	OK	OK	BROADCAST TEST RESULTS READ
	03	OK	OK	BROADCAST TEST DATA SEND
21	02	OK	OK	ERROR LOG READ
	03	OK	OK	ERROR LOG CLEAR

Allocating Event Memory

If data link areas are allocated in event memory, the Open Network Controller can participate in the data links on the Controller Link Network, and personal computers and other devices on an Ethernet network can access remote data link areas by reading/writing event memory. In the Open Network Controller, the CIO and DM areas can be used to create data link areas.

Data link areas are set using the CX-Net.

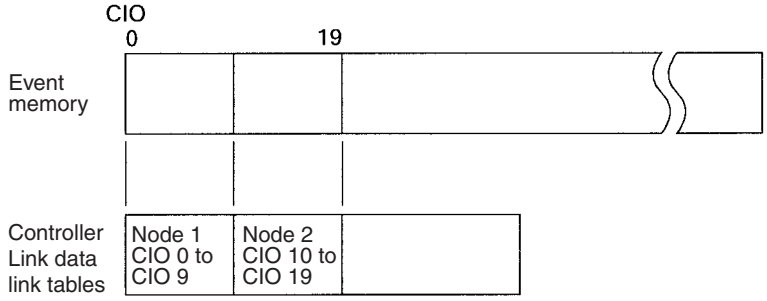

Precautions

- Data link areas must be set so that they do not use words allocated for other purposes.
- The refresh interval from the data link memory on the Controller Link Support Board to event memory is set using the Setting Tool for the ONC.

SLK_UNIT

The SLK_UNIT is a software component that functions like a Communications Unit to connect to a SYSMAC LINK network through a SYSMAC LINK Support Board.

FINS Commands Addressed to SLK_UNIT

The following FINS commands can be addressed to the SLK_UNIT (i.e., to the SYSMAC LINK Support Board). Data link tables for the SYSMAC LINK Support Board in the Open Network Controller are set using the CX-Net.

Command code		Data links		Name
		Active	Stopped	
04	01	Not valid	OK	RUN
	02	OK	Not valid	STOP
05	01	OK	OK	CONTROLLER DATA READ
06	01	OK	OK	CONTROLLER STATUS READ
	02	OK	OK	NETWORK STATUS READ
	03	OK	OK	DATA LINK STATUS READ
08	01	OK	OK	LOOPBACK TEST
	02	OK	OK	BROADCAST TEST RESULTS READ
	03	OK	OK	BROADCAST TEST DATA SEND
21	02	OK	OK	ERROR LOG READ
	03	OK	OK	ERROR LOG CLEAR

Allocating Event Memory

When data link words are allocated in event memory, the Open Network Controller can participate in the data links on the SYSMAC LINK Network. This enables personal computers and other devices on an Ethernet network to access remote data link areas by reading/writing event memory.

With the Open Network Controller, CIO and DM can be used for data links.

Data link areas are set using the CX-Net.

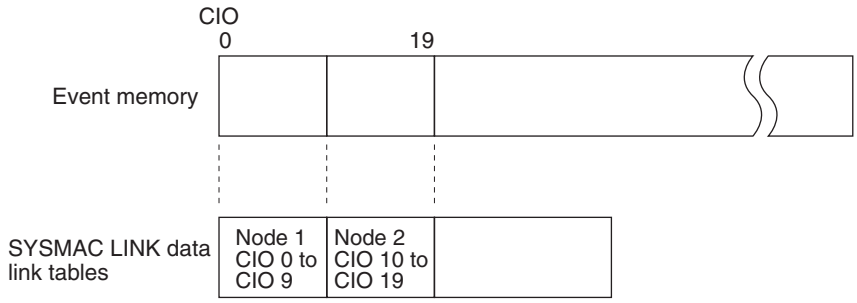

Precautions

- Data link areas must be set so that they do not use words allocated for other purposes.
- The refresh interval from the data link memory on the SYSMAC LINK Support Board to event memory is set using the Setting Tool for the ONC.

BUSCS1_UNIT

The BUSCS1_UNIT is a software component that enables FINS communications and I/O communications (CS1 Bus connection) with CS1 PLCs through a CS1 Bus Interface Board. The BUSCS1_UNIT and CPU Bus Units function as separate nodes on the FINS network. The default node addresses are node 1 for the BUSCS1_UNIT and node 2 for CPU Bus Unit (CS1 side).

For example, when the FINS network (broken line in the following diagram) is network 4, FINS communications can be sent to the Open Network Controller node 1 on network 4 from the CS1.

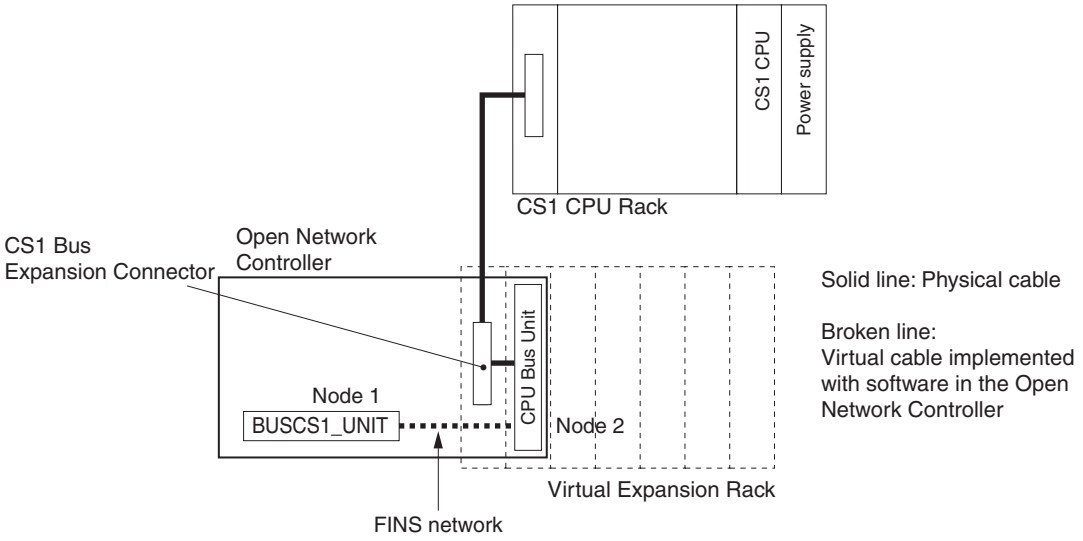

Note The BUSCS1_UNIT and the CPU Bus Unit in the Open Network Controller are actually implemented using the BUSCS1_UNIT (CS1 Bus Connection network provider).

Allocating Event Memory

By allocating I/O words in event memory to the CS1 CPU Unit (abbreviated as CS1), data can be sent and received (I/O communications) between the CS1 and the Open Network Controller. The areas and sizes can be set as follows:

- 20 input words (Writes contents of CS1 memory to the Open Network Controller event memory.)
- 20 output words (Outputs the words written in the Open Network Controller event memory to the PLC memory.)
- The maximum size of memory that can be allocated is 7,784 words.

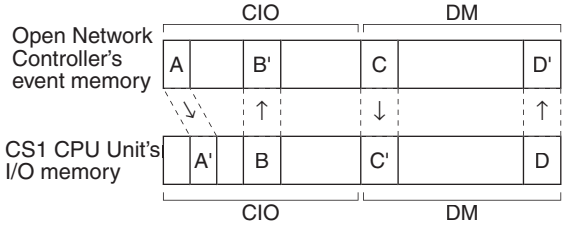

FINS Commands Addressed to BUSCS1_UNIT and CPU Bus Units

The FINS commands used by BUSCS1_UNIT and CPU Bus Units are different. For details, refer to *10-6 FINS Commands Addressed to BUSCS1_UNIT* and *10-7 FINS Commands Addressed to the CPU Bus Unit*.

■ **FINS Commands Addressed to BUSCS1_UNIT**

The following FINS command can be addressed to the BUSCS1_UNIT.

Command code	Name
05 01	CONTROLLER DATA READ

■ **FINS Commands Addressed to CPU Bus Units**

The following FINS commands can be addressed to CPU Bus Units.

Command code	Name
05 01	CONTROLLER DATA READ
21 02	ERROR LOG READ
21 03	ERROR LOG CLEAR

System Setting Precautions

Even if the PLC power is ON, the PLC will not be in RUN status unless the initial processing of the Open Network Controller (i.e., the CS1 Bus Interface Board installed in the Open Network Controller) has been completed. The Open Network Controller requires about 25 seconds to start after the power has been turned ON. Consider the Open Network Controller and PLC startup times when designing the system.

If the Open Network Controller power is turned OFF while the PLC power is ON, an I/O bus error will occur in the PLC. Consider this factor when designing the system.

DRM_UNIT

The DRM_UNIT is a software component that functions like a Communications Unit to connect to a DeviceNet network. The DeviceNet can function as both a Slave and a Master for Open Network Controller version 2.

DeviceNet Communications Methods

Any of the following three methods can be used to communicate through an Open Network Controller between personal computers or other devices on an Ethernet network and devices on the DeviceNet network (Master function only).

- Allocate DeviceNet remote I/O data to event memory and read/write event memory.
- Send/receive FINS messages to/from devices on the DeviceNet network (only for devices that support FINS). (Not all devices support FINS communications functions with Open Network Controllers (e.g., C200HX/HE/HG or C200HS PLCs).)
- Send explicit messages to devices on the DeviceNet network.

Allocating Event Memory

■ **Master Function**

If DeviceNet remote I/O is allocated in event memory when the Master function is used, personal computers and other devices on an Ethernet network can access remote I/O data by reading/writing event memory.

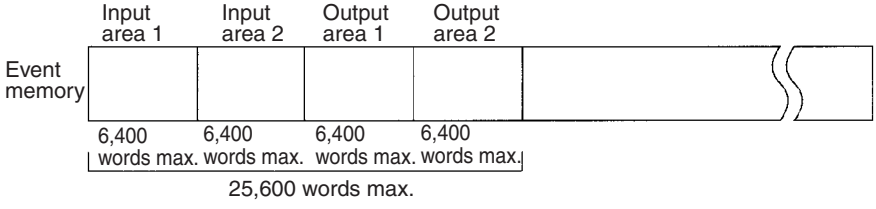

Up to two input areas and two outputs areas can be allocated in event memory. Each area can contain up to 6,400 words, for a maximum of 12,800 input words and 12,800 output words.

Allocations can be made for a maximum of 63 nodes and up to 100 words (200 bytes) can be allocated per node in each area.

Allocated words are refreshed periodically and the refresh interval can be specified in increments of 1 ms. (The refresh interval must be longer than the actual communications cycle time. The communications cycle time can be checked in the status area.)

These data words are allocated using the Setting Tool for the ONC. A separate status area of 90 words can also be allocated. For details on the status area, refer to *11-4 DeviceNet Status Area*.

■ **Slave Function**

If the Open Network Controller is used as a Slave, the DeviceNet Master (e.g., a PLC) will read and write I/O data from the Slave. For the Open Network Controller, the I/O data is allocated in event memory.

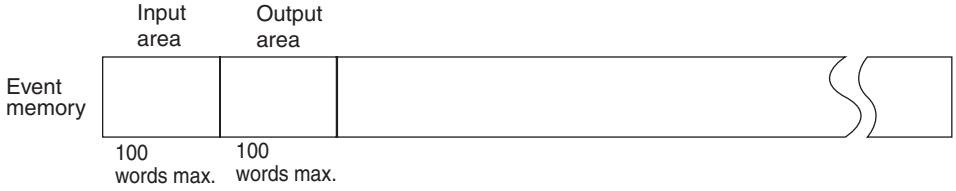

Up to 100 words each can be allocated in event memory for an input area and an output area. The words are allocated using the Setting Tool for the ONC. There are two modes that can be used for allocation: Using all of the set input and output areas as the Slave I/O data and using the DeviceNet Configurator to use specified sizes of the input and output areas.

Explicit Messages

FINS command code 2801 can be used to send explicit messages to devices on the DeviceNet network. This function enables communications with the Master and Slaves on the DeviceNet network. The Open Network Controller converts explicit messages returned from the DeviceNet devices to FINS responses. This function can be used to read maintenance information from DRT2-series Smart Slaves.

FINS Commands Addressed to DRM_UNIT

The following FINS commands can be addressed to the DRM_UNIT.

Command code	Name
04 01	RUN
04 02	STOP
04 03	RESET
05 01	CONTROLLER DATA READ
08 01	LOOPBACK TEST
28 01	EXPLICIT MESSAGE SEND

Precautions

I/O areas and the status areas must be set so that they do not use words allocated to other purposes.

The longest FINS message exchanged with between the DeviceNet network and the Open Network Controller is 552 bytes beginning from the ICF.

HLK_UNIT

HLK_UNIT is a software component that converts FINS commands to the following communications protocols.

Supported Serial Communications Protocols

The following three serial communications protocols are supported.

- SYSWAY
- SYSWAY CV
- CompoWay/F

HLK_UNIT converts FINS commands to commands in the above protocols. This function enables FINS message communications through the Open Network Controller between personal computers and other devices on the Ethernet network and the following devices, including OMRON FA components that support the CompoWay/F protocol and the following OMRON PLCs.

- PLCs that do not directly support FINS commands, e.g., the CQM1, SRM1, C1000H, C2000H, and C20P
- Temperature Controllers (e.g., the E5CN) and Intelligent Signal Processors on a CompoWay/F network, which previously could not connect to personal computers and other devices on Ethernet networks

FINS message communications are also supported for the following ID Controllers and Productivity Monitors.

V600/V620 Series ID Controllers
TP700-B□□1, TP700-B□□2, and TP710-A Productivity Monitors

Applicable FINS Commands and Applicable PLCs

The FINS commands supported by each protocol and the applicable PLCs are given below.

SYSWAY Protocol

FINS Commands

Command code	Name
01 01	READ MEMORY AREA
01 02	WRITE MEMORY AREA
04 01	RUN
04 02	STOP
05 01	CONTROLLER DATA READ
06 01	CONTROLLER STATUS READ
08 01	LOOPBACK TEST
22 0F	FILE MEMORY INDEX READ
22 10	FILE MEMORY READ
22 11	FILE MEMORY WRITE
23 01	FORCED SET/RESET
23 02	FORCED SET/RESET CANCEL

Applicable PLCs

The following PLCs support the SYSWAY protocol. (Not all of the above FINS commands are supported by each of the PLCs.)

C20, C50, C120, C120F, C20H/C28H/C40H/C60H, C20P/C28P/C40P/C60P, C20PF/C28PF/C40PF/C60PF, C500, C500F, C1000H, C1000HF, C2000H, C200H, C200HS, C200HX/HG/HE, CQM1, CQM1H, CPM1, CPM1A, CPM2A, CPM2C, SRM1, CV500, CVM1, CV1000, CV2000, CS1, and CJ1.

SYSWAY CV Host Link Protocol

FINS Commands

Command code		Name
01	01	MEMORY AREA READ
	02	MEMORY AREA WRITE
	03	MEMORY AREA FILL
	04	MULTIPLE MEMORY AREA READ
	05	MEMORY AREA TRANSFER
02	01	PARAMETER AREA READ
	02	PARAMETER AREA WRITE
	03	PARAMETER AREA CLEAR
03	04	PROGRAM AREA PROTECT
	05	PROGRAM AREA PROTECT CLEAR
	06	PROGRAM AREA READ
	07	PROGRAM AREA WRITE
	08	PROGRAM AREA CLEAR
04	01	RUN
	02	STOP
05	01	CONTROLLER DATA READ
	02	CONNECTION DATA READ
06	01	CONTROLLER STATUS READ
	20	CYCLE TIME READ
07	01	CLOCK READ
	02	CLOCK WRITE
09	20	MESSAGE READ (MESSAGE CLEAR, FAL/FALS READ)
0C	01	ACCESS RIGHT ACQUIRE
	02	ACCESS RIGHT FORCED ACQUIRE
	03	ACCESS RIGHT RELEASE
21	01	ERROR CLEAR
	02	ERROR LOG READ
	03	ERROR LOG CLEAR
22	01	FILE NAME READ
	02	SINGLE FILE READ
	03	SINGLE FILE WRITE
	04	MEMORY CARD FORMAT
	05	FILE DELETE
	06	VOLUME LABEL CREATE/DELETE
	07	FILE COPY
	08	FILE NAME CHANGE
	09	FILE DATA CHECK
	0A	MEMORY AREA FILE TRANSFER
	0B	PARAMETER AREA FILE TRANSFER
	0C	PROGRAM AREA FILE TRANSFER
23	01	FORCED SET/RESET
	02	FORCED SET/RESET CANCEL

Applicable PLCs

The following PLCs support the SYSWAY CV protocol. (Not all of the above FINS commands are supported by each of the PLCs.)

CVM1, CV-series, CS1, and CJ1 PLCs

CompoWay/F Protocol

Applicable Commands

The commands that can be used depend on the CompoWay/F component. Refer to the operation manuals for the components.

Refer to *12-4-16 FINS Commands for the CompoWay/F Protocol* in *12-4 FINS Commands Addressed to Devices via HLK_UNIT* for information on sending FINS commands from the Open Network Controller to CompoWay/F components.

Applicable Models

Commands can be sent to any component that supports the CompoWay/F protocol.

Precautions

HLK does not support slave-initiated communications (i.e., receiving FINS commands from the PLC) using FINS commands.

ID Controllers and Productivity Monitors

V600/V620-series ID Controllers and TP700-B1, TP700-B2, and TP710-A Productivity Monitors support the CompoWay/F protocol.

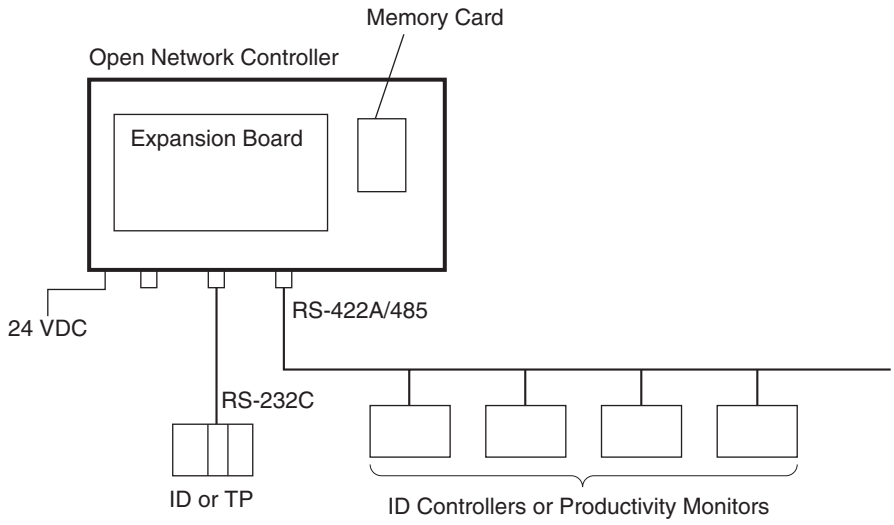

- FINS commands and responses can be used to connect the V600/V620-series ID Controllers and TP700-B1, TP700-B2, and TP710-A Productivity Monitors
- The HLK_UNIT automatically converts the command/response format used between the HLK_UNIT and the ID Controllers or Productivity Monitors. Therefore, FINS commands can be used to control and monitor ID Controllers or Productivity Monitors without having to use separate protocols.

FINS Commands Addressed to ID Controllers

Command code	Name
01 01	MEMORY AREA READ
01 02	MEMORY AREA WRITE
02 02	DATA MANAGEMENT COMMAND EXECUTE Checks Data Carrier memory or manages the number of times memory (EEPROM) has been rewritten.
04 02	AUTOCOMMAND PROCESSING CANCEL
08 01	LOOPBACK TEST
0B 01	ABORT
32 25	ID CONTROLLER COMMUNICATIONS COMMAND EXECUTE

FINS Commands Addressed to TP700 Productivity Monitors

FINS command	Variable	Function/measured value	Requested data type
01 01	40	All measured values	0
	41	Non-programmable total power	1
	42	Programmable total power	2
	43	Instantaneous power	3
	44	Instantaneous voltage	4
	45	Instantaneous current	5
	46	Power factor and instantaneous current	6

Note Refer to the *TP700 Productivity Monitor Operation Manual* for details on the functions/measured values, and requested data types.

FINS Commands Addressed to TP710 Productivity Monitors

FINS command	Function	Processing details
0101	A	Measured items (category A)
0101	B	Statistical items (category B)
0101, 0102	C	Setting items (category C)
0101, 0102	D	User information (category D)
0101, 0102	E	User control information (category E)

Note Refer to the *TP710 Productivity Monitor Operation Manual* for details on the functions and processing details.

HSV_UNIT (PT Connection Service Network Provider)

The HSV_HOST provides a service to connect PT (Programmable Terminals) to a COM port of the Open Network Connector. The Open Network Controller operates as a Host Link Unit for a virtual PLC and provides data memory (DM) and I/O memory (CIO) to the PT.

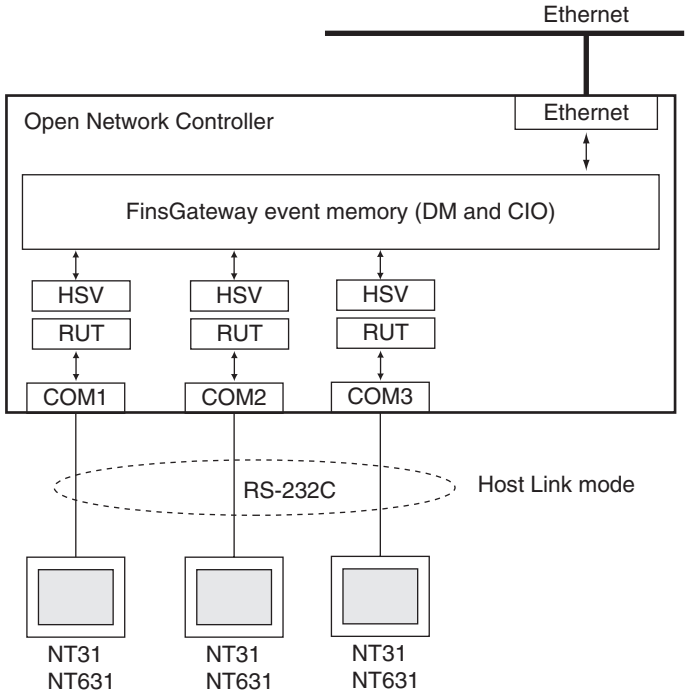

Connectable PTs

The following PTs can be connected to the Open Network Controller.

NT31C-ST141(B):	Color STN, LCD model
NT31-ST121(B):	Monochrome STN, LCD model
NT631C-ST141(B):	Color TFT, LCD model
NT631C-ST151(B):	Color STN, LCD model
NT631-ST211(B):	High contrast, EL model

Other PTs are not supported and their operation may not be stable.
Host Link mode is the only communications method that is supported.

Memory Settings Supported by PTs

The DM Area and the CIO Area can be set for the PT. If other areas (such as TIM or AR) are set, communications errors will occur.

Precautions

HLK_UNIT and HSV_UNIT cannot be used on the same COM port.

RCOM_UNIT

The RemoteCOM Unit (RCOM_UNIT) is a software component that is used to enable the RS-232C port of the ITNC-SGB01 SerialGateBox to be used as an Open Network Controller serial port. This enables the Open Network Controller to communicate via Ethernet with FA devices that do not have a serial interface.

The RCOM_UNIT functions as a FinsGatewayQNX NP (network provider) with the Open Network Controller in the same way as the HLK_UNIT. To use RCOM_UNIT, the Open Network Controller requires application software (either the Open Network Controller's optional software or user-provided software) to enable RCOM_UNIT to be used with the Open Network Controller, in the same way as with HLK_UNIT. The differences between using serial communications with HLK_UNIT and RCOM_UNIT are shown in the following diagrams.

Serial Communications Using HLK_UNIT

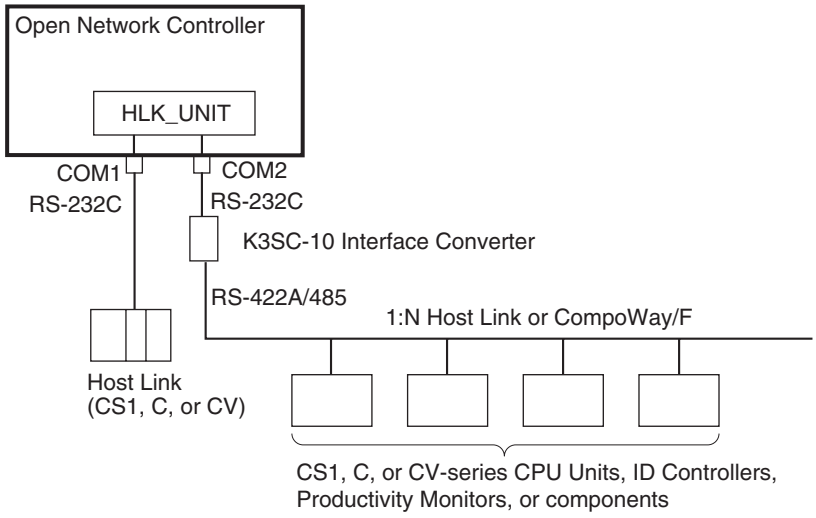

Serial Communications Using RCOM_UNIT

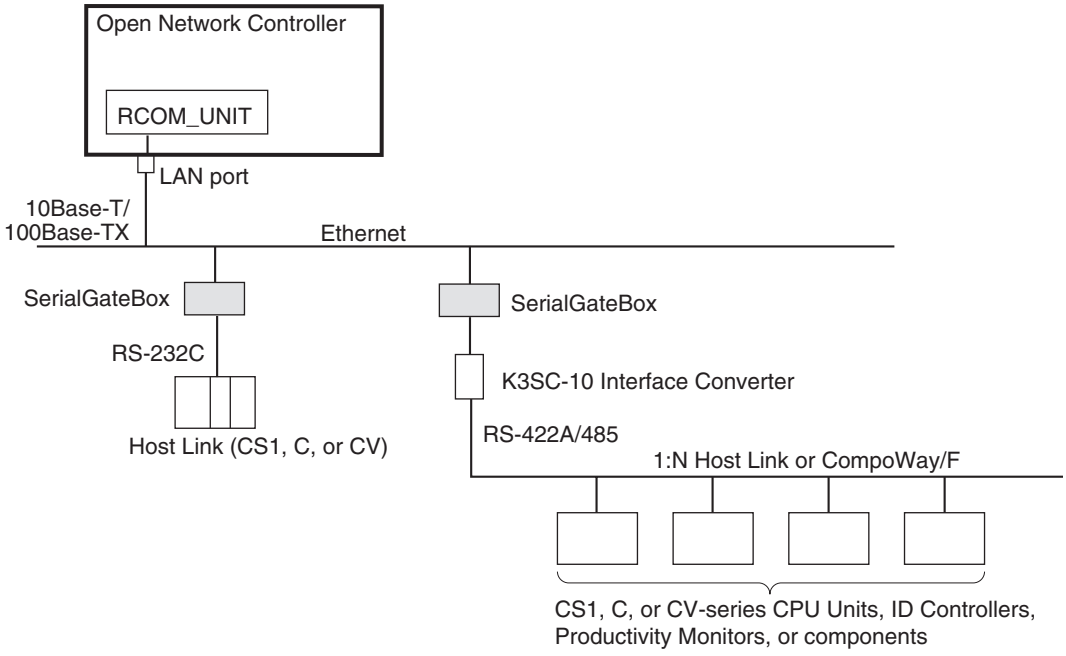

System Configuration

The Open Network Controller can send and receive FINS messages to and from PLCs and OMRON FA components that support the CompoWay/F protocol through SerialGateBoxes on an Ethernet network. When a 1:N Host Link or CompoWay/F network is connected, RS-232-to-RS-422A/485 conversion can be performed using a K3SC-10 Interface Converter.

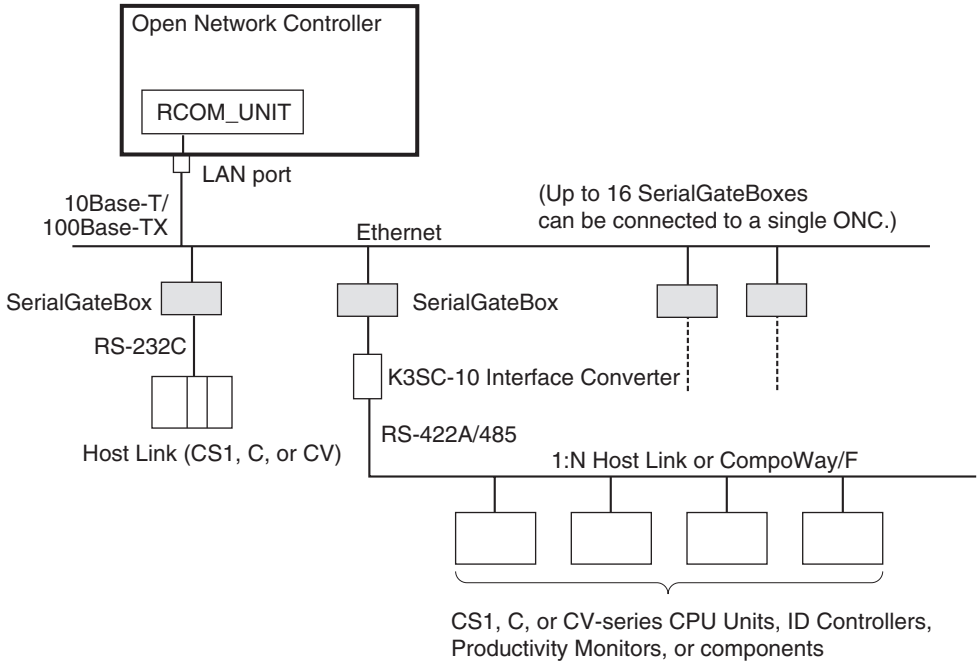

Note

1. Direct connections to RS-422 and RS-485, and to non-OMRON PLCs, are not supported.
2. This communications system can be used simultaneously with standard Ethernet communications (such as FTP).
3. Each Open Network Controller and SerialGateBox has a separate IP address. For details on setting the SerialGateBox IP addresses and port numbers, refer to the *SerialGateBox Operation Manual*. Up to 16 SerialGateBoxes can be connected to a single Open Network Controller. If this condition is satisfied, an essentially unlimited number of Open Network Controllers can be used on a single network.

Number of Connectable Units

Up to 16 SerialGateBoxes can be connected to a single Open Network Controller. The unit number of the RCOM_UNIT, however, must not be the same as the unit number of other network providers (such as the ETN_UNIT or HLK_UNIT).

If the above conditions are satisfied, an essentially unlimited number of Open Network Controllers can be used on a single network.

Note The unit numbers can be checked using the *Startup Services* setting. For details, refer to *14-3-1 Startup Services* under *14-3 RemoteCOM Setup*.

Supported Serial Communications Protocols

The following serial communications protocols are supported by RCOM_UNIT, just as they are for HLK_UNIT.

- SYSWAY
- SYSWAY CV
- CompoWay/F
- ID Controllers (V600/V620 Series)
- Productivity Monitors (TP700-B1, TP700-B2, and TP710-A)

RCOM_UNIT converts FINS commands to commands in the above protocols. This function enables FINS message communications between personal computers and other devices on the Ethernet network and the following devices, including OMRON FA components that support the CompoWay/F protocol and the following OMRON PLCs.

- PLCs that do not directly support FINS commands, e.g., the CQM1, SRM1, C1000H, C2000H, and C20P
- Temperature Controllers (e.g., the E5CN) and Intelligent Signal Processors on a CompoWay/F network, which previously could not connect to personal computers and other devices on Ethernet networks

Note MEL_UNIT cannot be used to connect non-OMRON PLCs through Serial-GateBoxes.

Refer to *SECTION 12 HLK_UNIT (Serial Network Provider)* for details on FINS commands, including a list of supported FINS commands and applicable models.

FLK_UNIT (FinsLink)

FinsLink is a software component that uses FINS commands to read and write data (memory areas DM and CIO) in a PLC connected to the Open Network Controller, and to periodically read and write that data to/from the Open Network Controller event memory (DM and CIO). FinsLink thereby creates virtual data links.

When FinsLink is used, virtual data links are created between the Open Network Controller and the PLCs on all networks supported by the Open Network Controller, as follows:

- Ethernet
- Serial (only SYSWAY and SYSWAY CV communications)
- Controller Link
- SYSMAC LINK

Note Controller Link and SYSMAC LINK networks have data link functions, so these can normally be used to create data links. If these functions are not used, FinsLink can be used to create virtual data links.

The data (memory areas DM and CIO) of PLCs connected serially to the Open Network Controller are periodically refreshed in the Open Network Controller's event memory (DM and CIO). Then, the serially connected PLC data can be read and written just by reading from or writing to the Open Network Controller's event memory from personal computers on the Ethernet. The data from each PLC connected to the Open Network Controller can be managed together in the Open Network Controller's event memory, enabling personal computers and other devices to easily access all the linked data from the Open Network Controller.

Data Link Area Allocations

The PLC memory areas (DM and CIO) are allocated in the Open Network Controller's event memory (DM and CIO) and participates in the data link. The PLC memory areas (DM and CIO) can then be read/written from/to the Open Network Controller from a personal computer connected to the network.

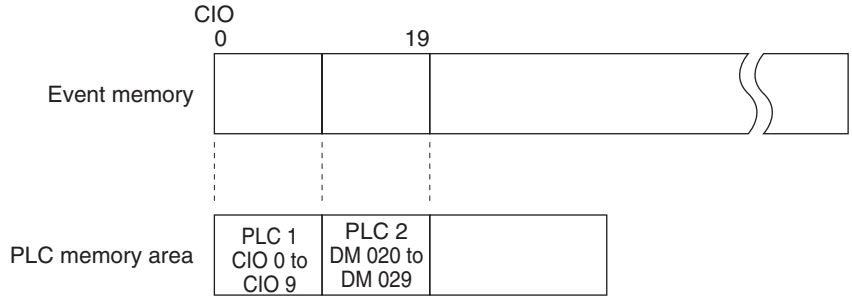

Note Specified by PLC (network address, node address, unit address).
Example: PLC 1 = (1.2.0), PLC 2= (1.3.0)

Precautions

- If FinsLink is used with multiple PLCs connected serially and one of the PLCs stops, a timeout will occur each cycle when attempting to access the stopped PLC. Therefore, the cycle time will be extended by the timeouts.
- HLK_UNIT is required when using FinsLink with serially connected PLCs.
- When using FinsLink with serially connected PLCs, set the FinsLink timeout to be longer than the HLK_UNIT timeout.
- FinsLink is different from the data link functions of Controller Link and SYSMAC LINK.
- The data link can be used to access the PLC's DM and CIO Areas only (other areas cannot be used).
- FinsLInk is not supported by CompoWay/F devices, ID Controllers, or Productivity Monitors.

1-4 Setting Tool

The Open Network Controller Web Service Setting Tool (version 2) is pre-installed on ONC Ver. 2. The Setting Tool is used to set the Open Network Controller, read and write Open Network Controller setup files, and restart the Open Network Controller from the Web browser.

The Setting Tool has the following functions.

- Setting the Open Network Controller
- Displaying and editing setup files
- Rebooting
- Displaying error log
- Monitoring indicators
- Displaying system profiles
- Synchronizing clocks

Web Service Version 2 Main Menu

Open Network Controller
Basic Setting Tool

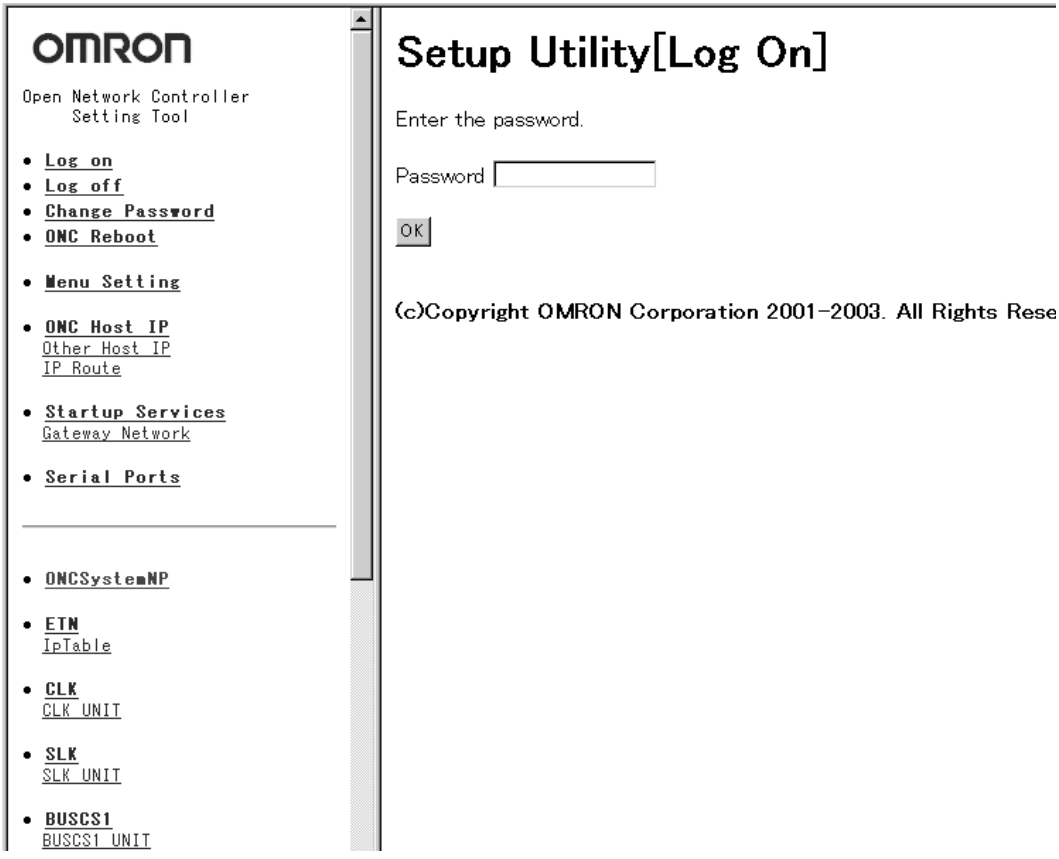

Refer to *SECTION 4 Software Settings (Basic) to SECTION 16 Utilities* for details on Open Network Controller setting methods. For details on other setting methods, refer to *SECTION 17 Web Service Version 2 Maintenance Menu*.

1-5 Operating Environment

This section describes the environment required to set the Open Network Controller. (Microsoft Internet Explorer is abbreviated to IE.)

1-5-1 ONC Java Applet Setting Tool for the ONC

The following environment is required.
Open Network Controller
Windows 98, Me, NT4.0, 2000, or XP
IE5.5 or later (SP2 or later is recommended.)

Note For IE6, SP1 or later is required.

1-5-2 Optional Software

When optional software for the Open Network Controller is used, a Memory Card may be required. For example, a Memory Card is used for the Data Collection/Distribution Service Software and the WebToolKit software if the web page size is larger than the available space on the internal disk.

Note

1. The OMRON Memory Cards used with ITNC-EIS01/EIX01(-DRM/-CST) Open Network Controllers can also be used.
2. Memory Cards are not provided with standard Open Network Controllers and must be purchased separately.

   The following OMRON Memory Cards are available.

Model	Memory size
HMC-EF372	30 MB
HMC-EF672	64 MB
HMC-EF282	256 MB
HMC-EF582	512 MB

1-6 Optional Software Precautions

This section describes the setting procedures when the settings for the optional software used with ITNC-EIS01/EIX01(-DRM/-CST) Open Network Controllers (abbreviated to ONC V1) are used with ITNC-EPX01(-DRM) Open Network Controllers (abbreviated to ONC V2), and when the optional software is used with ONC V2 from the start.

For details on the differences between ONC V1 and ONC V2, refer to the comparison table in *1-7 Precautions when Changing from an ITNC-EIS01/EIX01(-DRM/-CST).*

Note The licensing agreement of the optional software permits one copy of the licensed software to be installed on a single Open Network Controller only. Additional licenses must be purchased to run the software on more than one Open Network Controller.

1-6-1 RemoteKit Software (RTK)

Note A Memory Card is not required to run RTK.

1,2,3...

1. Install RTK on the ONC V2.
2. Perform software settings on the ONC V2.

1-6-2 Data Collection/Distribution Service Software (DCD)

Note A Memory Card is required to store the collection/distribution files. Install the Memory Card before running DCD.

1,2,3...

1. Install DCD on the ONC V2.
2. Perform software settings on the ONC V2.

Change the collection directory from /hd/... to /kd/...

If the collection filename is given in the FTP macro, change the path name from /hd/... to /kd/...

Note When uninstalling the DCD, it is possible to also select FinsLink to be uninstalled as well. Do not, however, uninstall FinsLink. If FinsLink is accidentally uninstalled, it can be reinstalled by restoring the Open Network Controller to its default status.

1-6-3 DataBaseToolKit Software (DBTK)

Note A Memory Card is not required.

1,2,3...

1. Install DBTK on the ONC V2.
2. Perform software settings on the ONC V2.

1-6-4 Perl Provided with DBTK

Note A Memory Card of 30 Mbytes or more is required as the installation destination. Install the Memory Card before installing the software.

Install Perl on the ONC V2 Memory Card (/kd). Reset the software.

Note

1. In *Chapter 1 Installing Perl* of the online manual, the installation destination and link destination are given as /hd. Use /kd for these destinations instead.
2. Perl can be downloaded from the ONC website.

1-6-5 RemoteCOM Software (RCOM)

RemoteCOM is pre-installed on the ONC V2. Reset the software.

1-6-6 Setting Links

The current directory for the Open Network Controller's (V1, V2) Web server is /hd/usr/web. Therefore, only directories under /hd/usr/web can be accessed from the Web browser.

For example, the top page (OncWizard.html) for the ONC Setting Tool installed for ONC V2 is in the /hd/usr/web/Applet directory, and it can be displayed by inputting http://10.0.0.1/Applet/OncWizard.html. (10.0.0.1 is the default IP address for the Open Network Controller.) This is because /hd/usr/web is used as the current directory.

The ONC V2 Memory Card is mounted as /kd. For the above reason, /kd cannot be accessed directly from the Web server. Therefore, the following operation is required to change links.

Use Web Service Version 2 to set links. Refer to *SECTION 17 Web Service Version 2 Maintenance Menu* for details on Web Service Version 2.

1,2,3...

1. Start up the Web browser from the personal computer.
2. Specify the Open Network Controller's IP address (or host name) + WebService.html, as shown in the following example, and then press the **Enter** Key.

Note The default IP address for the Open Network Controller is 10.0.0.1. The IP address can be changed by entering the new IP address.

When the Open Network Controller is connected properly, the Web Service top page will be displayed.

3. Select ***Return to Maintenance Menu*** to display the Maintenance Menu.
4. Select ***Setup Menu***.
5. Select ***Edit Setup Files***.
6. Input the path name /etc/FgwwQnx/make_links in the input field at the bottom of the edit window, as shown in the following example, and click the **OK** Button.

The following setup file editing window will be displayed.

7. Input the data as shown in the following example.

The formats are as follows:
Format 1:
In -fs /kd/[*save destination filename on Memory Card*]
/hd/usr/web[*save destination filename in internal memory*]

Format 2:
In -fs /kd/[*name of directory to create on Memory Card*]
/hd/usr/web[*name of directory to create in internal memory*]

In the above example, when /hd/usr/web/Project1.CAB is accessed, /kd/Project1.CAB is referenced. When the internal disk space is insufficient to save the CAB file, the above setting will allow the files that cannot be saved on the internal disk to be saved on the Memory Card, while using the same directory path as access.

8. Click the **OK** Button. The password for editing is not set by default. Editing can be performed with or without setting a password.

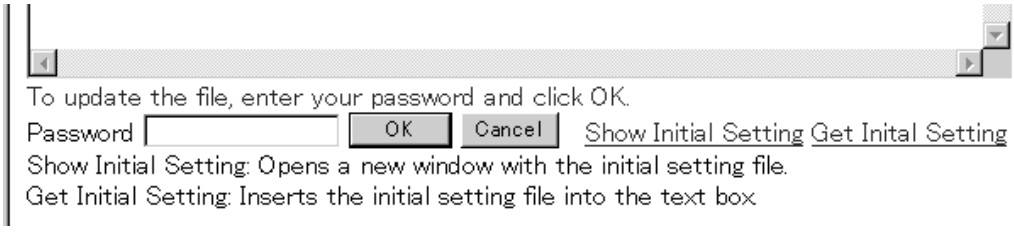

9. Reset the ONC V2.

1-7 Precautions when Changing from an ITNC-EIS01/EIX01(-DRM/-CST)

- The Memory Card slot can be used to install OMRON Memory Cards only. Do not use the slot to install other modem cards or Ethernet cards.
- The Open Network Controller is provided with four serial COM ports. COM3 is for RS-232C, and COM4 is for RS-422A/485 communications. The ITNC-EIS01/EIX01(-DRM/-CST) has a different port configuration, so check the ports carefully before use.
- The installation destination of Memory Cards in QNX format is /kd.
  The installation destination of Memory Cards in ITNC-EIS01/EIX01(-

DRM/-CST) Open Network Controllers is /hd, so make sure that the correct directory is used. In ITNC-EPX01(-DRM) Open Network Controllers, /hd is used for the internal disk.

- The dimensions, weight, power consumption, and other specifications are different. Check and consider the installation space and power supply when replacing an Open Network Controller with a different version.
- The installation orientation has been changed. The ONC V2 cannot be installed vertically. Refer to *3-4 Installing the Open Network Controller* for details.
- The Expansion Board slot specifications have been changed to comply with PCI bus standards instead of ISA bus standards. The ISA Board installed in the ITNC-EIX01(-DRM/-CST) Open Network Controller cannot be used with the ONC V2.
- Always check operations before running programs created on an ITNC-EIS01/EIX01(-DRM/-CST) Open Network Controller using a QNX development environment.
- Some Units have additional functions (CLK_UNIT and DRM_UNIT). Check the functions of the Unit being used.
- The error codes of each Unit (such as CLK_UNIT and DRM_UNIT) are different. Always refer to the error codes provided in this manual.
- When a CS1 bus is used to connect to a CS1 PLC, a CS1 Bus Interface Board must be purchased separately.
- ONC V2 models that include a CS1 Bus Interface Board, such as ITNC-EIS01/EIX01(-CST) are not available.
- The Open Network Controller's internal disk is pre-installed with a Setting Tool for setting the Open Network Controller and Web maintenance software for performing maintenance functions.

The following table provides a comparison of the ITNC-EIX01-DRM and ITNC-EPX01-DRM specifications.

Item	ITNC-EIX01-DRM Open Network Controller	ITNC-EPX01(-DRM) Open Network Controller
CPU	486-compatible CPU 66 MHz 486SX equivalent	486-compatible CPU 133 MHz 486DX equivalent
FPU	No (software emulation)	Yes
Memory	16 MB	32 MB
Internal disk	8 MB	32 MB
LAN	10Base-T	100Base-T/100Base-TX
Serial ports	Two RS-232C, one RS-422A/485	Three RS-232C, one RS-422A/485
Indications	POWER, RUN, ERR, LAN, COM1, COM2, COM3, CARD, Two 7-segment display digits	POWER, RUN, ERR, LAN, 100, DISK, CARD COM1, COM2, COM3, COM4 Two 7-segment display digits
OS	QNX4.25	QNX4.25
FinsGateway	Ver. 2.5	Ver. 2.8
Card slot	Type 1: Conforms to PCMCIA, 5 V	Type 1, 2: For Memory Card only, 3.3 V
Expansion slot	Conforms to ISA bus standards.	Conforms to PCI bus standards.
Expansion Board	SYSMAC Board Controller Link Support Board SYSMAC LINK Support Board	Controller Link Support Board SYSMAC LINK Support Board CS1 Bus Interface Board
Dimensions	234.4 x 140 x 62.4 mm (W x D x H)	234.4 x 140 x 73.4 mm (W x D x H)
Weight	1.0 kg max.	1.0 kg max. (without DRM) 1.1 kg max (with DRM)
Power consumption	20 W max.	20 W max.
Mounting Bracket	ITNC-AP002	None

Item	ITNC-EIX01-DRM Open Network Controller	ITNC-EPX01(-DRM) Open Network Controller
DIN Track	ITNC-DIN01	ITNC-DIN01
Backup memory	No	Yes

1-8 Basic Application Procedure

The following procedure is used to install and set up an Open Network Controller.

1,2,3...

1. Design the configuration of the network on paper, including the following.
   Refer to *SECTION 4 Software Settings (Basic) to SECTION 16 Utilities.*
   - The networks to be used and the network addresses
   - Node address
   - FINS routing
   - Event memory allocation
2. Mount the Expansion Board (only when required).
   Refer to *3-3 Mounting Expansion Boards.*
3. Set the DIP switches.
   Refer to *3-2 DIP Switch Settings.*
4. Connect the cables.
   Refer to *3-5 Connecting the Power Supply Cable to 3-8 Connecting Ethernet Cables*.
   - Power supply cables
   - Cables for Unit settings
   - Network cables
5. Take the settings designed on paper and actually make them in the Open Network Controller using the following methods.
   - Use basic settings on the Open Network Controller. Refer to *SECTION 4 Software Settings (Basic)*.
   - Use each of the network provider settings. Refer to *SECTION 5 CPU_UNIT to SECTION 16 Utilities*.
6. Restart the Open Network Controller.
7. Start operation.

1-9 Communications Frame Length

The communications frame length when communicating with FINS commands is shown here. The commands are executed by specifying the remote network address, node address, and unit address in the parameters.

For details on the FINS commands for each network provider (NP), refer to the explanation of FINS commands in each section.

Command Frame

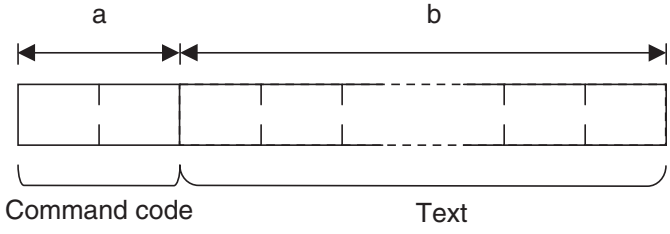

Network (protocol)	a	b
Ethernet	2 bytes	0 to 2,000 bytes
Controller Link (CLK)	2 bytes	0 to 2,000 bytes
SYSMAC LINK (SLK)	2 bytes	0 to 540 bytes
DeviceNet	2 bytes	0 to 540 bytes
CS1 Bus Interface	2 bytes	0 to 2,000 bytes
Serial: SYSWAY	2 bytes	0 to 996 bytes
Serial: SYSWAY CV	2 bytes	0 to 540 bytes

Response Frame

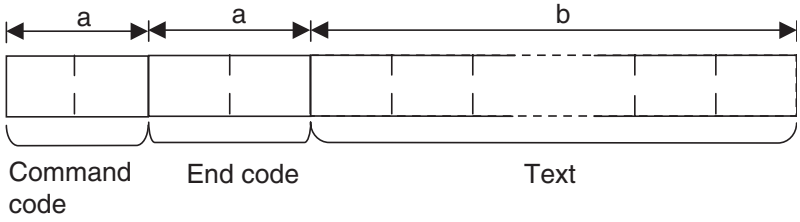

Network (protocol)	a	b
Ethernet	2 bytes	0 to 1,998 bytes
Controller Link (CLK)	2 bytes	0 to 1,998 bytes
SYSMAC LINK (SLK)	2 bytes	0 to 538 bytes
DeviceNet	2 bytes	0 to 538 bytes
CS1 Bus Interface	2 bytes	0 to 1,998 bytes
Serial (SYSWAY)	2 bytes	0 to 994 bytes
Serial (SYSWAY CV)	2 bytes	0 to 538 bytes

SECTION 2
Optional Software Overview

This section provides an overview of the optional software available for use with the Open Network Controller.

2-1 List of Optional Software 36
2-2 Data Collection/Distribution Service Software. 36
2-2-1 Overview. 36
2-2-2 Application Examples. 38
2-3 DataBaseToolKit Software 39
2-3-1 Overview. 39
2-3-2 Basic Functions Executed from Included Utilities 39
2-3-3 Application Functions with Programming Required 40
2-4 RemoteKit Software 41
2-4-1 Overview. 41
2-4-2 E-mail Function 41
2-4-3 Dialup Function 42
2-5 Overview of Non-OMRON PLC Connection Unit. 43

2-1 List of Optional Software

Optional software that requires minimal settings for each application is provided for use with the Open Network Controller. The following table provides a list of the optional software.

Name	Overview	Reference
Data Collection/Distribution Service Software	By simply specifying the data data contents and retrieval conditions, the data from the Open Network Controller is automatically collected and distributed.	*2-2 Data Collection/Distribution Service Software*
DataBaseToolKit Software	Transfers the onsite data that has been collected to a general-purpose database.	*2-3 DataBaseToolKit Software*
RemoteKit Software	Simply and quickly creates a system for remotely monitoring equipment and devices.	*2-4 RemoteKit Software*
Non-OMRON PLC Connection Unit Software (for Mitsubishi A-series Computer Link Module)	Enables the Open Network Controller to be connected to non-OMRON PLCs.	*2-5 Overview of Non-OMRON PLC Connection Unit*

2-2 Data Collection/Distribution Service Software

2-2-1 Overview

The Data Collection/Distribution Service Software is run on the Open Network Controller and has the following main functions.

- Collects the data in the Open Network Controller or data from devices connected to the Open Network Controller.
- The collected data is stored on the Memory Card in the Open Network Controller using a standard file format (CSV or binary).
- The saved data can be retrieved from a personal computer through the Ethernet. The collected data can also be used by installing the Memory Card in the personal computer.
- The data collected by the Open Network Controller can be automatically sent to a personal computer using FTP.
- Data can be distributed from the Open Network Controller to the various devices on the network.

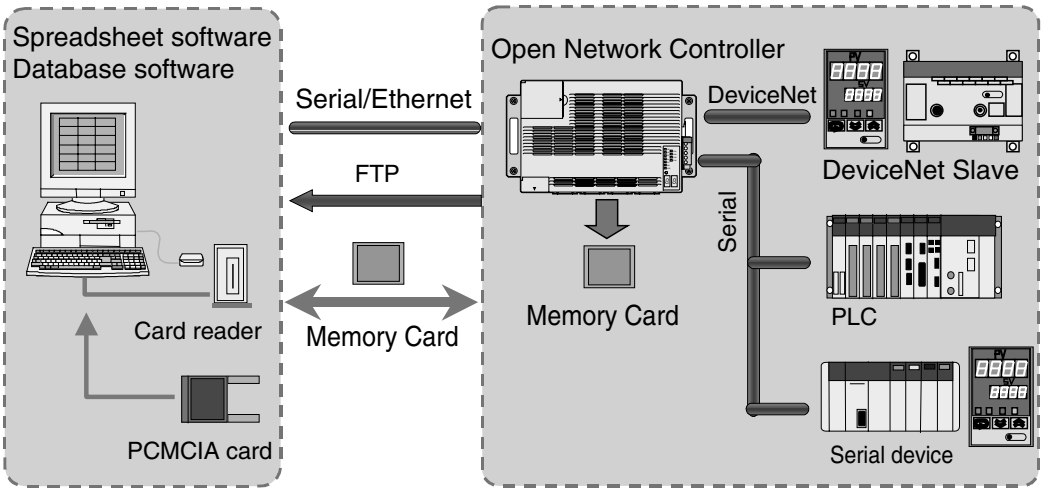

The features of Data Collection/Distribution Service Software are as follows:

- The collection/distribution node on the network can be specified by setting the applicable network address, node number, and unit number.
- The data file location can be specified for each collection/distribution unit (tag). (For example, retrieving 10 words starting from DM 10 to /kd/usr/dcd/data1, or 20 words starting from DM 100 to /kd/usr/dcd/data2 can be set separately.)
- The data file to be saved can be specified in binary, text (CSV file), or in dump file format. (Dump file: Data is saved by dumping the specified words from the memory area of each device in a CSV file.)
- The date and time is added to the top of the collected data. (Binary: YYMMDDHHMMSS; CSV: YYMM,DDHH,MMSS)
- When the data file is full, the data can be backed up (backup files are saved by date/time).
- FINS commands can be used to simply read the collected data through the Ethernet.
- FINS commands can be used to start and stop the Data Collection/Distribution Service (e.g., start when DM100 bit 0 turns ON, and stop when bit 0 turns OFF).
- The Open Network Controller's internal time scheduler can be used to start and stop the Data Collection/Distribution Service (e.g., start at 09:00, stop at 17:30).
- Data can be collected and distributed according to memory events (e.g., collect when DM 100 bit 0 turns ON, distribute when DM 200 is 0x0100 or higher).

2-2-2 Application Examples

- The following example is for automatically collecting data every 10 seconds from PLCs for production equipment. After production is completed, a Memory Card is used to take accumulated data to a personal computer for analysis. Data in a Memory Card can also be distributed to the PLCs.

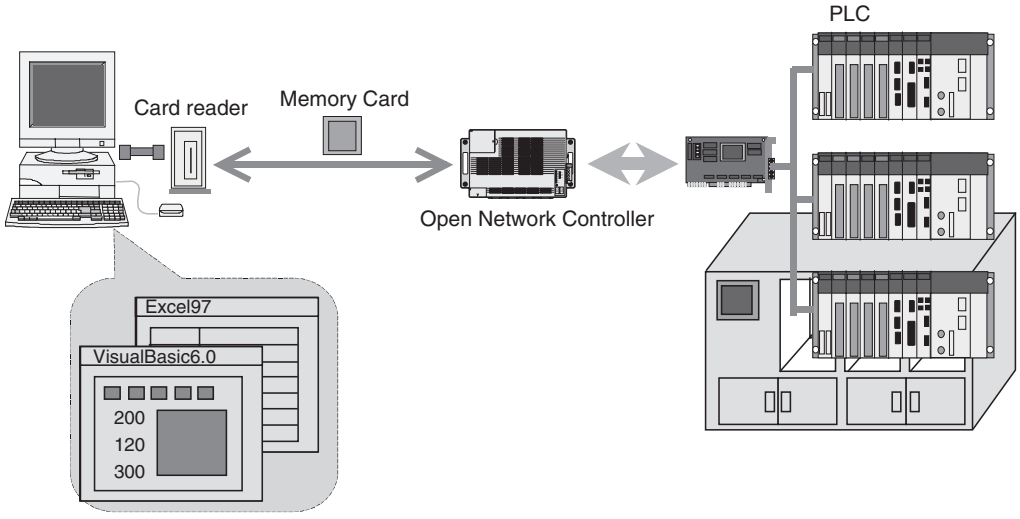

Spreadsheet software, database software

- The following example is for automatically collecting data, using processing results and errors in the production line as the collection event keys (saved in the Memory Card that is installed in the Open Network Controller). The data is retrieved and analyzed in the host computer through an inhouse LAN (intranet) and the Internet.

  The data retrieval methods are as follows:

- Obtain data by executing FINS commands.
- Obtain files by executing FTP commands from the host.
- Obtain files using automatic transmission (FTP) from the Open Network Controller.

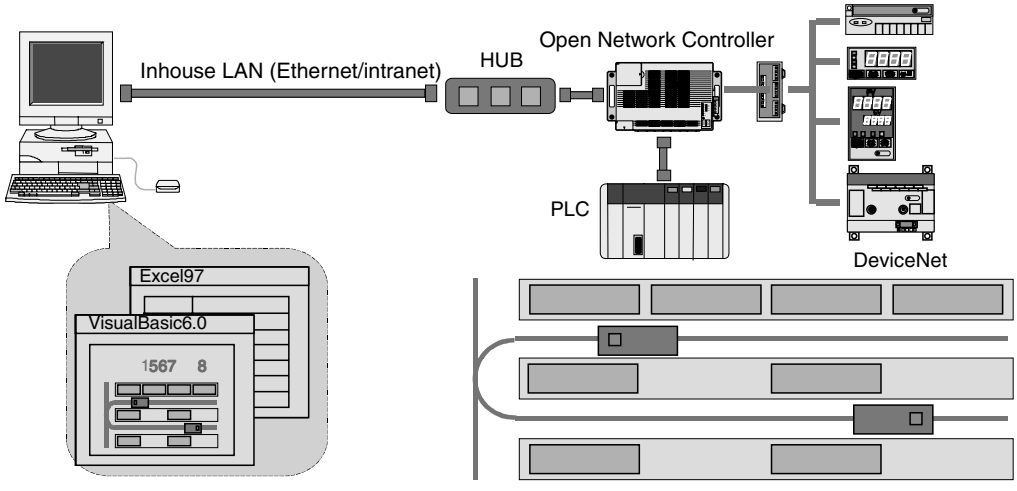

Spreadsheet software, database software

2-3 DataBaseToolKit Software

2-3-1 Overview

The DataBaseToolKit Software is a software package used to link the Open Network Controller with the ODBC-compatible database server on the personal computer. The main functions are collecting required data from the Open Network Controller on the network, and automatically storing the data in the database in the personal computer. Programming is not required to perform this function. Data can be collected and written to the database by simply setting with the Windows-based utility that is included.

Note The DataBaseToolKit uses the term “data logging” to refer to data collection and storage in the database.

Basic System Configuration

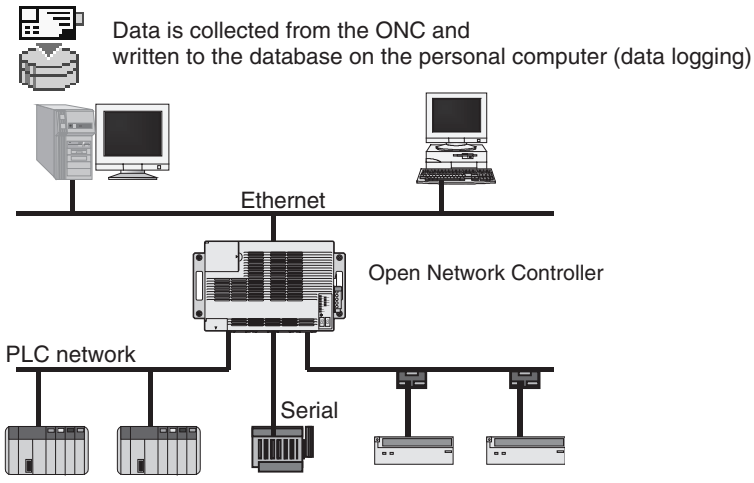

Note
1. This example assumes that more than one Open Network Controller is present on the LAN in the above configuration.
2. The software can be run without executing programs up to data collection and writing to the database, but the user must create database software for applications such as analyzing the database and displaying graphics.

The main DataBaseToolKit functions are provided as ActiveX Controls, so applications can be created to link to the user’s own databases. Web applications that combine the database and Web can also be created by using the ActiveX Controls and Perl for QNX (script language).

The following sections describe the DataBaseToolKit functions, divided into basic functions for executing included utilities, and application functions requiring programming.

2-3-2 Basic Functions Executed from Included Utilities

The basic functions of the DataBaseToolKit are described here. The following functions do not require any programming, and can be used simply with the Windows-based utilities that are included.

Data Logging Setting

Use the included Windows-based utility (ONC_Explorer) to create data logging setup files (files that set which data, when to collect it, and where to write it). The data logging setup files can be saved on the personal computer and each of the Open Network Controllers.

Data Logging (Collecting Data and Writing to Database)

According to the data logging settings set by the user, data logging is executed from the Open Network Controller on the network (required data is collected and automatically written to the database on the personal computer).
This function is normally executed using the included Windows-based utility (DB_Manager) after the data logging scheduling (automatic start/stop setting) has been set. Manual execution from DB_Manager is also possible.
The following ODBC-compatible database software is supported.

- Microsoft SQL Server
- Microsoft Access
- Oracle

The above functions can be executed from the included Windows-based utility, so special programming is not required. To analyze the database or display graphics, however, the user must create programs for the database software.

Displaying, Searching for Database Tables, and File Output

Simple database browsing functions are provided with the included Windows-based utility (DB_Browser). The DB_Browser is used mainly to check whether data logging is being executed according to the ONC_Explorer settings (debugging). DB_Browser is used to display and search the contents of the database tables. The data displayed with the DB_Browser can also be saved in CSV files or text files.

Using Data from the Data Collection/Distribution Service Software (DCD)

The CSV files output from the Data Collection/Distribution Service Software (DCD) can be converted to DataBaseToolKit records and written to the database. This function is performed using the included Windows-based utility (CSV_Converter). This function can also be performed automatically (refer to the following paragraph.)

Automatic Start/Stop of Data Logging, CSV Data Conversion, and Data Deletion

The three functions (tasks) of data logging, CSV data conversion, and data deletion (deleting records from the database file) can be automatically started and stopped. The included Windows-based utility (DB_Manager) is used to perform automatic start/stop.

2-3-3 Application Functions with Programming Required

Refer to the DataBaseToolKit Software manual appendices and online manual for further details on the functions described here.

ActiveX Controls

■ **ActiveX Controls for Data Logging**

ActiveX Controls (OCX) are supported to log Open Network Controller data in the database. This functions allows the creation of user-specific applications. For details, refer to section 5 of the DataBaseToolKit online manual (databasetoolkit.chm).

■ **Socket 2 Controls**

A socket is used for flexible, high-speed event access (Socket2 controls). When this ActiveX Control is used, user-specific database linking applications can be created.

- Parameters can be changed each time, and the Open Network Controller's event memory can be accessed quickly.
- Socket 2 Controls can be combined with ActiveX Controls for data logging to create high-performance client applications.

For details, refer to the Socket2 online manual (Socket2_online.chm).

Linking to ODBC-compliant Database Applications

The DataBaseToolKit is used to log raw data in a fixed database format. The client application for using this data must be created using the tools for each database. For details on database linking methods, refer to section 3 of the DataBaseToolKit online manual (databasetoolkit.chm). For details on the DataBaseToolKit database formats, refer to section 6 of the DataBaseToolKit online manual (databasetoolkit.chm).

Creating Small Databases in the ONC (Distributed Database Mode)

A database can be created in the Open Network Controller's Memory Card, and independent database applications can be configured for the Open Network Controller. For details, refer to the Perl application guide (Perl_guide.chm).

2-4 RemoteKit Software

2-4-1 Overview

RemoteKit is a software component used to enhance the communications functions of the Open Network Controller.

E-mail Function

Electronic mail (e-mail) can be used to send notification of ONC event information to a personal computer on the network or a remote personal computer.

Dialup Function

Dialup connection from the Open Network Controller is supported, and can be used in many ways, such as recording multiple connection destinations, and switching connection destinations for different applications. Dialup connection to the Open Network Controller is also supported, allowing Web monitoring using the WebToolKit Software (optional software).

2-4-2 E-mail Function

The e-mail function has the following features.

- Supports file attachments, so files of results from data collection performed using the optional Data Collection/Distribution Software can be mailed as attachments.
- Supports IA (Internet Appliance) compact mode, enabling e-mail to be sent to cell phones and PDA devices.
- Supports POP Before SMTP, allowing e-mail to be sent to mail servers of service providers that use strict security.
- Displays ASCII characters when displaying the event memory dump.
- E-mail can be sent using the CC or BCC functions, just like standard e-mail software.
- For each e-mail message, the subject, headers, and display items can be selected (display items refer to the data, user's message, error message, and status information). The user can specify any header.
- Variables can be used in the subject, header, and user's message, and the current ONC's event memory values and bit status can be displayed in the body of the e-mail (RemoteKit Ver. 1.2 or higher).
- Up to 128 event definitions can be used for e-mail transmission conditions (i.e. for changes in values).
- More than one outgoing mail server can be registered, allowing a different server to be selected for each e-mail application.
- If chattering occurs in bit status when changes in event memory bit status are being used to trigger e-mail transmissions, the same e-mail may be sent more than once. To prevent this, the specified event memory bit can

be monitored periodically and e-mail sent when the specified condition is satisfied at the monitoring time (RemoteKit Ver. 1.2 or higher).

2-4-3 Dialup Function

Using a standard modem, dialup connections (PPP) can be made to personal computers in a remote location from the Open Network Controller.

- E-mail can be sent by just registering the conditions, such as the server and account name. Network administration, such as checking connections, obtaining IP addresses, and cancelling PPP can all be performed by the dialup manager.
- Dialup connections are possible from applications, such as dialup when e-mail messages are sent, or when an event occurs.

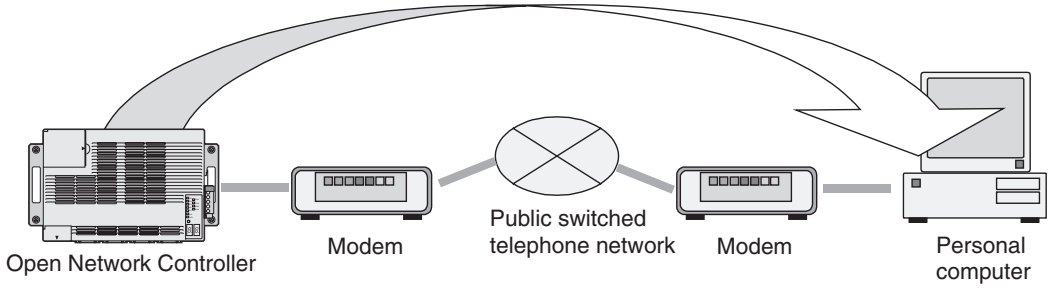

A remote personal computer can also be used to dialup an Open Network Controller connected to a standard modem.

- Dialup connection to the Open Network Controller is possible by simply setting the PPP settings.
- For example, after receiving error information in an e-mail message from the Open Network Controller via a modem, a dialup connection can be made to the Open Network Controller, and maintenance performed using the Web monitor created using the WebToolKit Software.

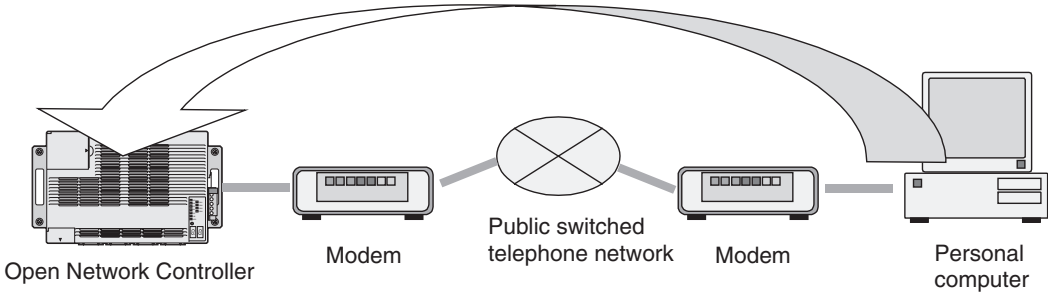

2-5 Overview of Non-OMRON PLC Connection Unit

A Non-OMRON PLC Connection Unit (called Non-OMRON PLC Connection Unit) can be used to connect to non-OMRON PLCs using software that runs on the Open Network Controller. Non-OMRON PLC Connection Units enable the connection of Mitsubishi A-series PLC Computer Link Modules. Non-OMRON PLC Connection Units have the same functions as HLK_UNIT (software for Host Link connections) that is included in the standard Open Network Controller.

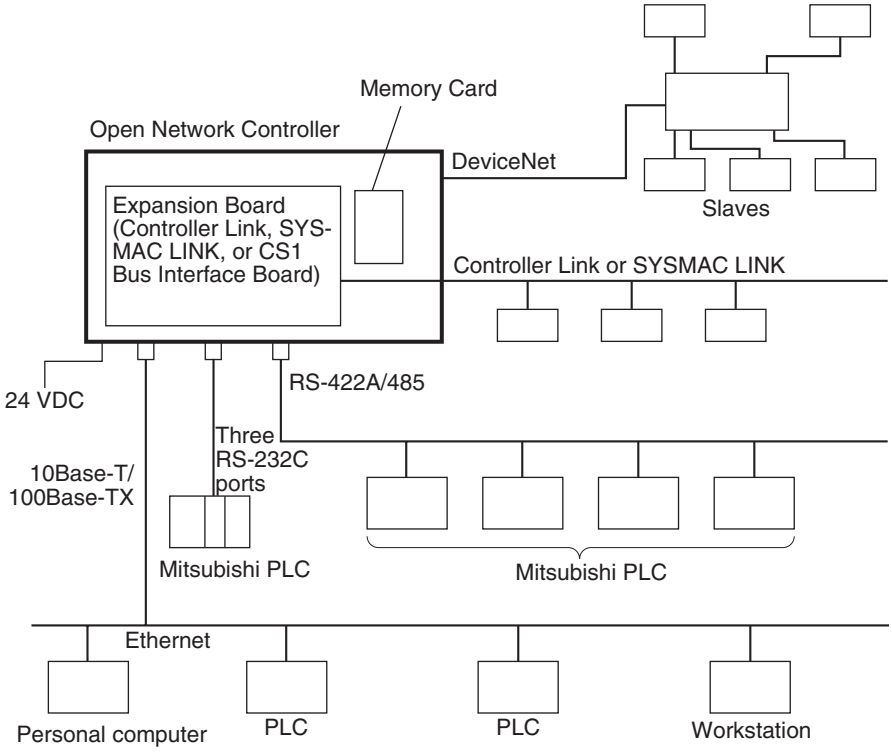

- When a Non-OMRON PLC Connection Unit (MEL_UNIT) is used, FINS commands and responses are used to connect to a Mitsubishi A-series PLC.
- The conversion of FINS commands and responses between MEL_UNIT and the Mitsubishi A-series PLC is performed automatically by MEL_UNIT. Therefore, Mitsubishi A-series PLCs can be controlled and monitored using FINS commands, without requiring knowledge of different protocols.
- The following FINS commands can be addressed to a Mitsubishi A-series PLC.

FINS command	Name
01 01	MEMORY AREA READ
01 02	MEMORY AREA WRITE
04 01	START
04 02	STOP
05 01	CONTROLLER READ
08 01	LOOPBACK TEST

SECTION 3
Hardware

This section provides information on the hardware components, installation, and settings of the Open Network Controller.

3-1 Nomenclature and Functions 46
3-1-1 Component Names and Functions 46
3-1-2 Indicators and 7-segment Display 47
3-2 DIP Switch Settings 49
3-2-1 DIP Switch 2 Functions 50
3-2-2 COM1 Port Settings (DIP Switch 2, Pin 1) 50
3-2-3 Seven-segment Display (DIP Switch 2, Pin 2 and Pin 3) 51
3-2-4 Return to Default Settings (DIP Switch 2, Pin 4) 52
3-2-5 IP Address Rewrite Mode (DIP Switch 2, Pins 1 and 8) 52
3-3 Mounting Expansion Boards 52
3-4 Installing the Open Network Controller 55
3-4-1 Orientation 55
3-4-2 Mounting Dimensions 56
3-4-3 Installation with Screws (without DIN Track) 57
3-4-4 Installation on DIN Track 57
3-5 Connecting the Power Supply Cable 59
3-5-1 Connecting the Cable 59
3-5-2 Wiring the Ground 61
3-6 Connecting COM Port Cables 61
3-6-1 Terminal Connections to COM1 62
3-6-2 SYSWAY and SYSWAY CV 62
3-6-3 CompoWay/F 65
3-6-4 PT Connections (COM1, COM2, or COM3) 67
3-7 Connecting DeviceNet Cables 67
3-7-1 Connectors 67
3-7-2 Connecting Communications Cables 68
3-7-3 Connecting Communications Cables to T-branch Taps 71
3-7-4 Connecting Terminating Resistors 72
3-7-5 Connecting Communications Cables to Nodes 73
3-8 Connecting Ethernet Cables 74
3-9 Handling Memory Cards 75
3-9-1 Memory Card Models 75
3-9-2 Inserting and Removing Memory Cards 75
3-9-3 Formatting Memory Cards 77

3-1 Nomenclature and Functions

This section gives the names and describes the functions of each component of the Open Network Controller.

3-1-1 Component Names and Functions

The names and functions of the Open Network Controller components will be described using the ITNC-EPX01-DRM with DeviceNet as an example. The ITNC-EPX01 does not have a connector for DeviceNet communications.

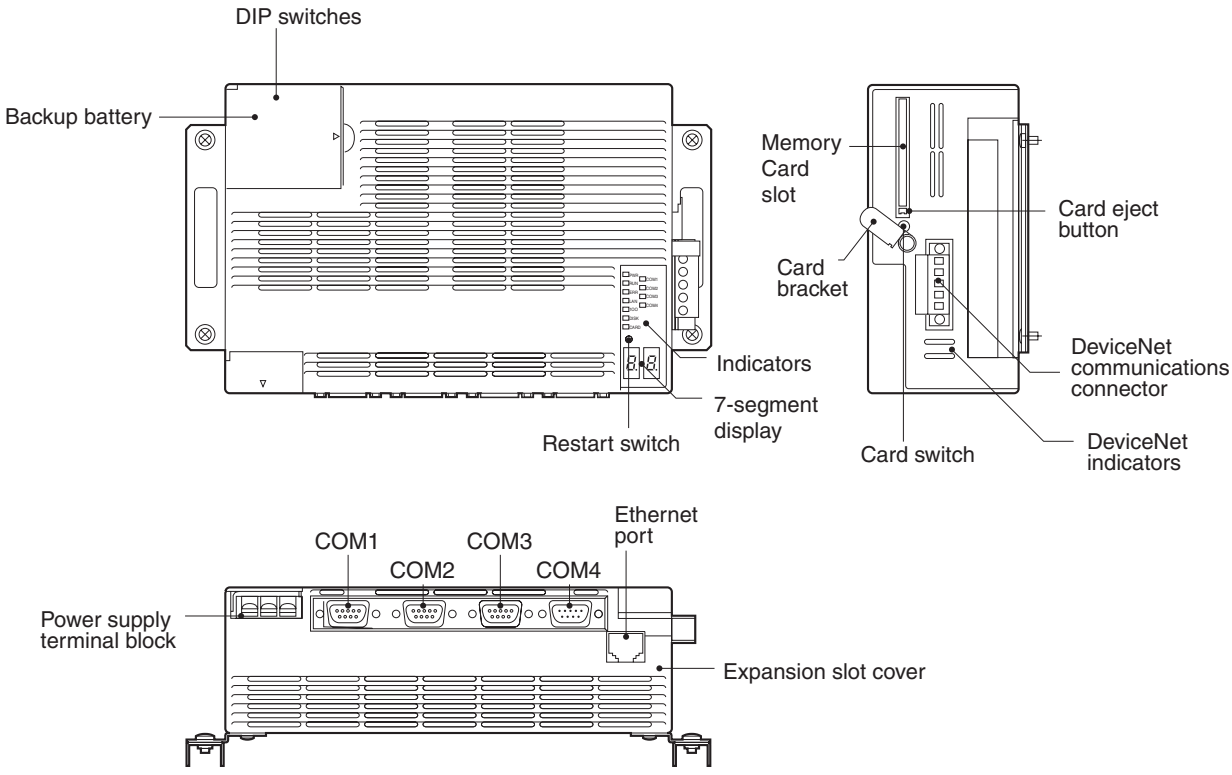

Name	Function
DIP switches	The DIP switches are used to make COM port and 7-segment display settings.
Backup battery	The backup battery backs up the realtime clock and the CMOS RAM. Replace it with a C500-BAT08 Battery when required.
Power supply terminal block	The power supply terminal block connects to a 24-V DC power supply.
Ethernet port	An Ethernet cable for 10Base-T or 100Base-TX is connected to the Ethernet port.
COM1	RS-232C
COM2	RS-232C
COM3	RS-232C
COM4	RS-422A/485
Expansion slot cover	The expansion slot is a PCI bus slot. Remove the cover to mount either a Controller Link Board, SYSMAC LINK Board, or CS1 Bus Interface Board.
Indicators	The indicators show the status of Open Network Controller operation.
7-segment display	The 7-segment display shows the error code, IP address, MAC ID on the DeviceNet network, or the FINS address, according to the DIP switch settings.
Restart switch	The restart switch restarts the system. Use the tip of a pen or similar pointed object to press the restart switch.

Name	Function
Memory Card slot	A Memory Card is mounted in this slot.
Card bracket	This bracket holds the Memory Card in place. Be sure to secure the Memory Card with this bracket.
Card switch	Press the card switch when inserting or removing a Memory Card. When inserting a Memory Card, press this switch to enable using the card. The CARD indicator will light. When removing the Memory Card, press this switch to enable removing the card. The CARD indicator go out.
Card eject button	Press the card eject button to remove the Memory Card. Before pressing this button, press the card switch and make sure the CARD indicator is not lit.
DeviceNet indicators (ITNC-EPX01-DRM only)	These indicators show the status of the DeviceNet network.
DeviceNet communications connector (ITNC-EPX01-DRM only)	A DeviceNet cable is connected to this connector.

3-1-2 Indicators and 7-segment Display

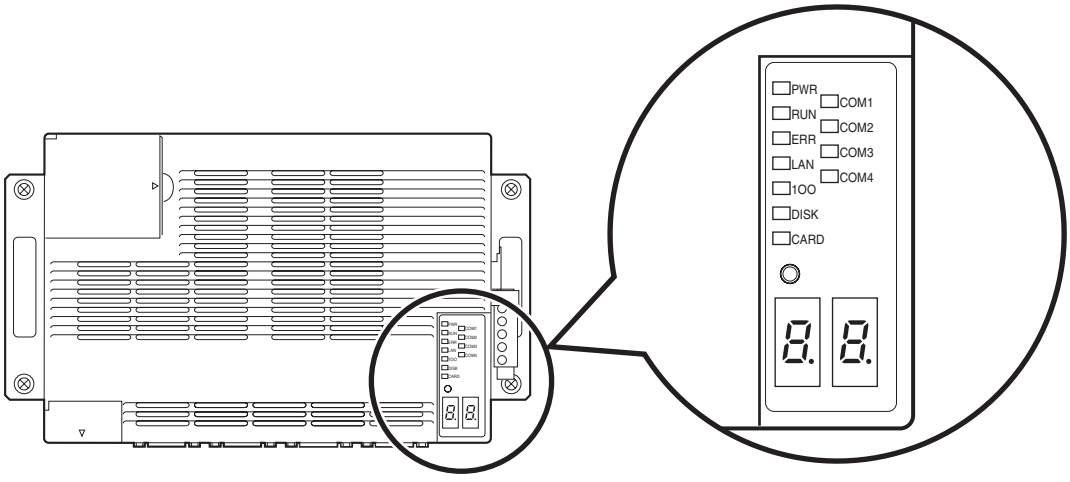

Indicators

Name	Color	Meaning
PWR	Green	Lit when the power supply is ON.
RUN	Green	Lit when the FinsGateway is running.
ERR	Red	Lit when an error occurs or when the power supply voltage drops. Flashes when the battery voltage is low.
LAN	Orange	Lit when an Ethernet cable is connected. Flashes during transmission.
100	Orange	Lit during 100Base-TX communications.
COM1	Orange	Lit during COM1 data transmission.
COM2	Orange	Lit during COM2 data transmission.
COM3	Orange	Lit during COM3 data transmission.
COM4	Orange	Lit during COM4 data transmission.
DISK	Orange	Lit when the internal flash disk is being accessed. Do not turn OFF the power to the ONC while the DISK indicator is lit. Turn OFF the power to the ONC when the indicator is not lit.

Name	Color	Meaning
CARD	Orange	Lit when the Card is being accessed. The Card cannot be inserted or removed while the CARD indicator is lit. Remove or insert the card only when the indicator is not lit.
	Green	Lit when the Card is being used. The Card cannot be inserted or removed while the CARD indicator is lit. Remove or insert the card only when the indicator is not lit.

Note The ERR indicator lights when the power supply voltage drops. The indicator may momentarily light when the power is turned OFF, but that does not mean that any problem has occurred.

.Seven-segment Display

Name	Details
7-segment display (2 digits)	The 7-segment display shows the error code, IP address, MAC ID on the DeviceNet network, or the FINS address, according to the DIP switch settings.

The 7-segment display shows alphanumeric characters. The alphabet characters that are displayed are shown below.

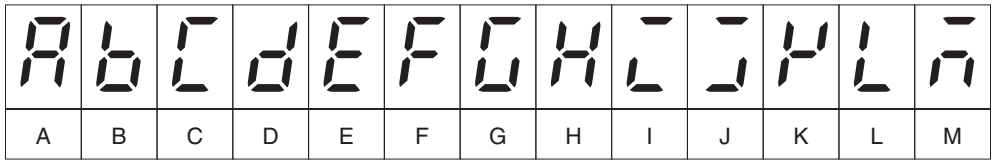

A	B	C	D	E	F	G	H	I	J	K	L	M

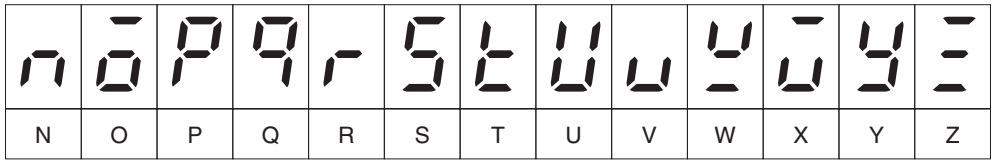

N	O	P	Q	R	S	T	U	V	W	X	Y	Z

DeviceNet Indicators

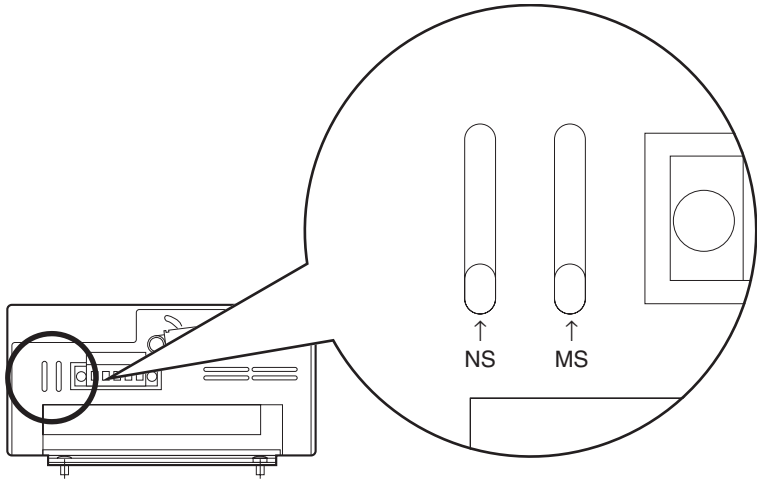

Indicator	Color	Status	Meaning
MS	---	Not lit	No power supply.
	Green	Lit	Normal.
		Flashing	Starting.
	Red	Flashing	Fatal error. Replace the Board.
		Lit	Fatal error. Replace the Board.
NS	---	Not lit	Offline.
	Green	Lit	Normal communications.
		Flashing	Online but no connection established.
	Red	Flashing	Communications error, no slaves, or I/O size mismatch.
		Lit	Communications impossible.

Note When indicators flash, the duration the indicator is lit and then not lit is approximately 0.5 s each.

Refer to *19-3 DeviceNet Indicator Displays* for information on troubleshooting with the indicators.

3-2 DIP Switch Settings

The following settings are made on pins 1 to 4 and pin 8 of DIP switch 2.

- COM1 port settings (selection of whether to login from COM1 or to use COM1 as a Host Link port) (pin 1)
- Seven-segment display settings (pins 2 and 3)
- Resetting setup file to default setting (pin 4)
- IP address rewrite mode (executing the ARP command from the personal computer and changing the ONC's IP address) (pins 1 and 8)

Do not change any pins on DIP switch 1, or pins 5 to 7 on DIP switch 2.

Note DIP switch settings must be made when the power is turned OFF.

⚠ **Caution** Set the DIP switch or replace the battery only after first touching a grounded metal object to discharge any static electricity from your body. Static electricity may cause faulty operation.

Opening the Battery Cover To make the DIP switch settings, first open the battery cover.

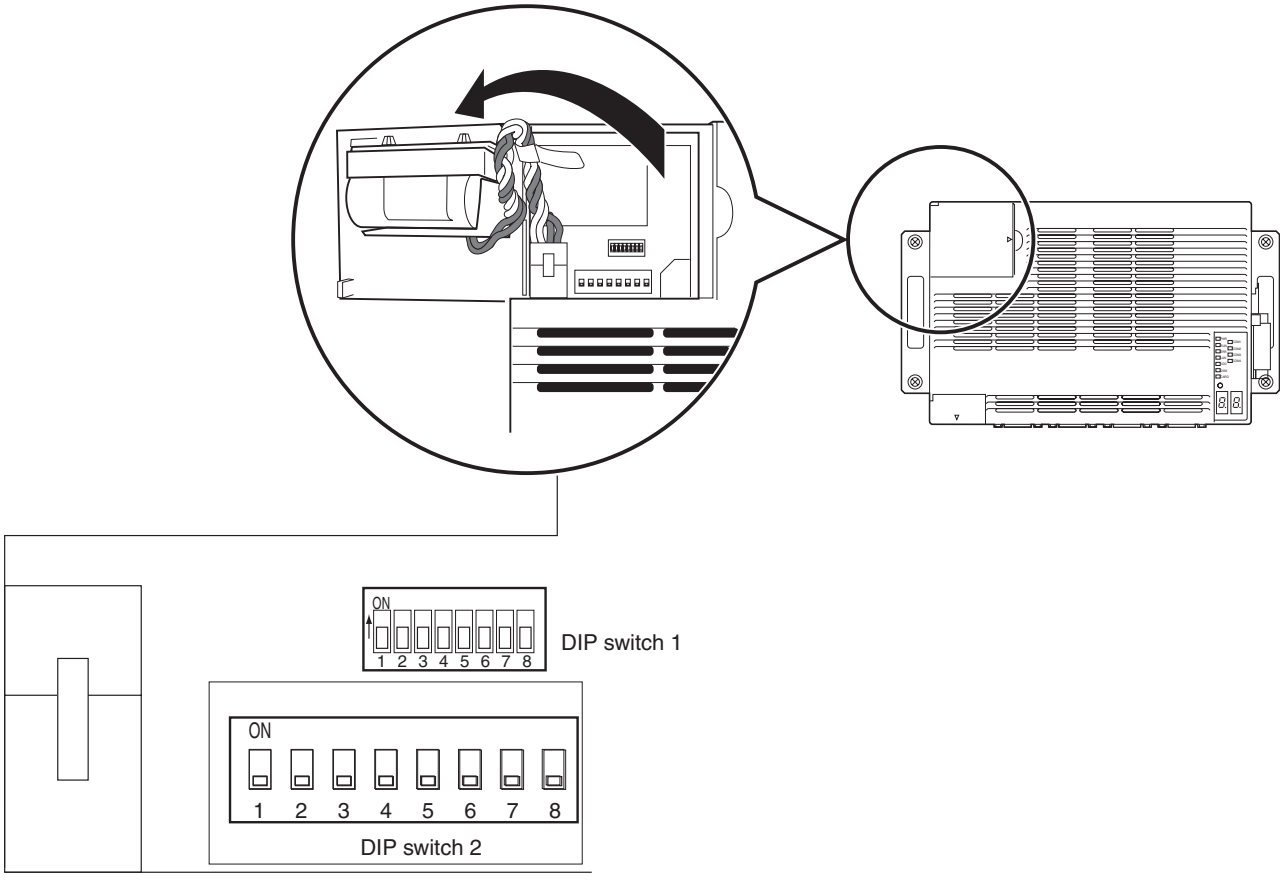

Note Do not change DIP switch 1 settings.

3-2-1 DIP Switch 2 Functions

Pin No.	Function
Pin 1	Sets the COM1 port (enables/disables logging on from COM1 port).
Pins 2 and 3	Sets the items displayed in the 7-segment display.
Pin 4	Resets the setup file to the default settings.
Pins 1 and 8	Sets the IP address rewrite mode.

3-2-2 COM1 Port Settings (DIP Switch 2, Pin 1)

COM1 port settings are shown in the following table.

DIP switch 2, pin 1	Function
ON	Enables login from COM1 port. FinsGateway will not be started.
OFF	Disables login from COM1 port.

Note 1. Turn ON DIP switch 2, pin 1 to log on from COM1 port and set Open Network Controller settings. Once the settings have been completed, if FinsGateway is to be started, turn OFF pin 1 and then restart.

2. Logging on from the LAN port is always possible, regardless of the setting of DIP switch 2, pin 1.

3-2-3 Seven-segment Display (DIP Switch 2, Pin 2 and Pin 3)

The settings for the 7-segment display are shown in the following table. If the settings are changed while the power is ON, the display will change to the new settings once the display under the old settings has been completed.

DIP switch 2, pin 2	DIP switch 2, pin 3	Display
OFF	OFF	Displays the error code when an error occurs. The 7-segment display is not valid unless the ERR indicator is lit. Refer to *19-2 Error Messages* for details.
ON	OFF	Displays the IP address for the Open Network Controller in hexadecimal. The display will be “IP” then, at approx. 1 s intervals, 8 bits at a time of the 32-bit IP address. For example, for an IP address of 192.168.1.13, the display would be “IP”, “C0”, “A8”, “01”, then “0D”.
OFF	ON	Displays the DeviceNet MAC ID and error code. Refer to *19-3 DeviceNet Indicator Displays* for information on error codes.
ON	ON	Displays the FINS address. The name, network address, node address, and unit address of network providers currently operating will be displayed, in order, at approx. 1 s intervals. The first two letters of the network provider names will be displayed, as shown below, and the addresses will be displayed in hexadecimal. • CP: CPU Unit • ET: ETN_UNIT (Ethernet network provider) • CL: CLK_UNIT (Controller Link network provider) • SL: SLK_UNIT (SYSMAC LINK network provider) • HL: HLK_UNIT (SYSWAY, SYSWAY CV and CompoWay/F network provider) • DR: DRM_UNIT (DeviceNet network provider) • BU: CS1 Bus Interface Board network provider) • RC: RCOM_UNIT (RemoteCOM connection network provider) • FL: FLK_UNIT (FinsLink) • CD: CARD (Memory Card access process) • PR: Other processes

Note When DIP switch 2, pin 2 is OFF, and pin 3 is ON, DeviceNet information is immediately displayed. If the DIP switch settings are changed to anything other than this, then the information for the new settings will be displayed after all of the information prior to the change has been displayed.

3-2-4 Return to Default Settings (DIP Switch 2, Pin 4)

This setting is read only when the Open Network Controller is started.

DIP switch 2, pin 4	Function
ON	Returns all setup files to the default settings.
OFF	Starts up using the user-defined setup files.

When the Open Network Controller is started with pin 4 ON, all setup files will be overwritten. Make sure that it is OK to overwrite the current setup files before turning ON DIP switch 2, pin 4. About 25 seconds are required to finish this operation. Turn OFF the Open Network Controller only after the RUN indicator starts flashing and the DISK indicator is OFF.

The procedure for starting the Open Network Controller with the default settings is given below.

1,2,3...

1. Turn ON DIP switch 2, pin 4.
2. Turn ON the power supply to the Open Network Controller. The RUN indicator will start flashing when all setup files have been returned to the default settings.
3. Check that the RUN indicator is flashing and the DISK indicator is OFF, and then turn OFF the power supply to the Open Network Controller.
4. Turn OFF DIP switch 2, pin 4.
5. Turn ON the power supply to the Open Network Controller again. The Open Network Controller will start with the default settings.

3-2-5 IP Address Rewrite Mode (DIP Switch 2, Pins 1 and 8)

To set IP address rewrite mode (changes the Open Network Controller's IP address when the ARP command is executed), turn ON both pins 1 and 8 of DIP switch 2. This setting is enabled only when the Open Network Controller is restarted.

DIP switch 2, pin 1	DIP switch 2, pin 8	Function
ON	ON	Sets the Open Network Controller to IP address rewrite mode.

For details on the procedure for changing the Open Network Controller's IP address, refer to *4-2-2 Executing the ARP Command to Change the IP Address.*

3-3 Mounting Expansion Boards

One of the following Boards can be mounted in the Open Network Controller.

Expansion Board	Model
Controller Link Board	3G8F7-CLD12(-V1) 3G8F7-CLK52(-V1) 3G8F7-CLK21(-V1)
SYSMAC LINK Board	3G8F7-SLK11 3G8F7-SLK21
CS1 Bus Interface Board	ITBC-CST01

The methods used to mount the Expansion Board are described next.

Note

1. When mounting the Expansion Board, refer to the Board's installation manual to set the Board correctly.

2. Turn OFF the power supply before mounting the Expansion Board.

1,2,3... 1. Remove the expansion slot cover.

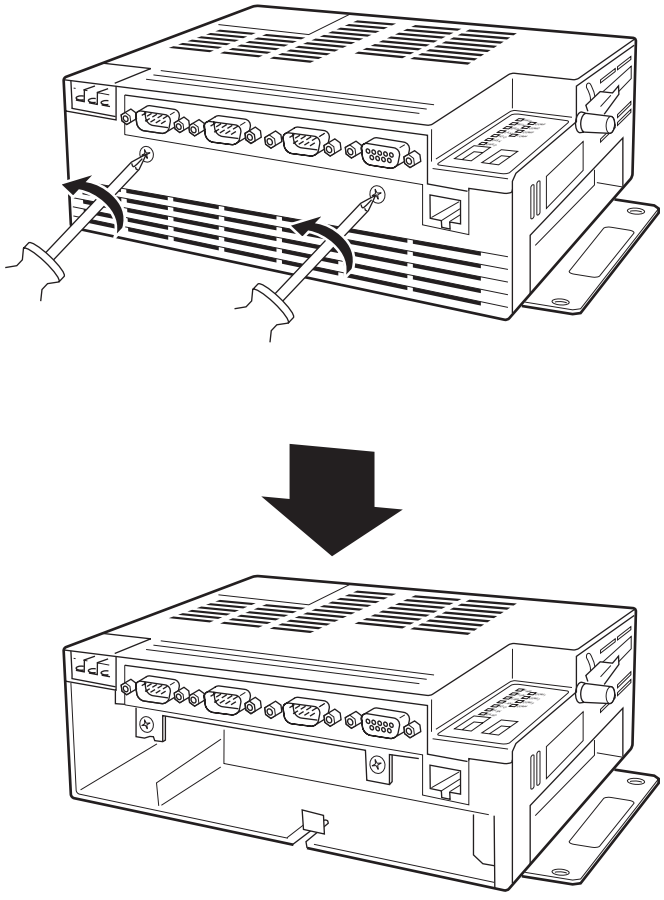

2. Remove the Expansion Board bracket and the dummy panel.

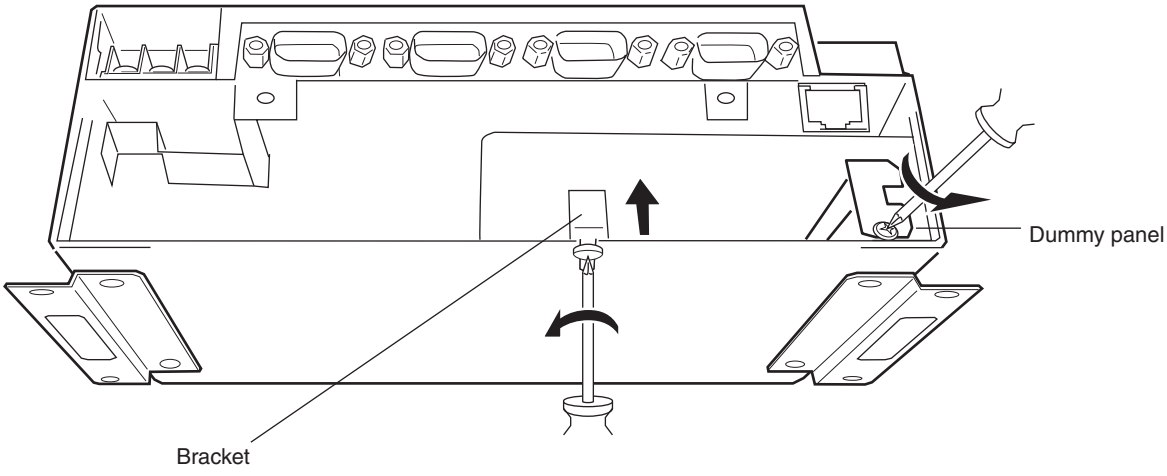

3. Insert the Expansion Board. Firmly insert the Expansion Board into the connector inside the Open Network Controller.

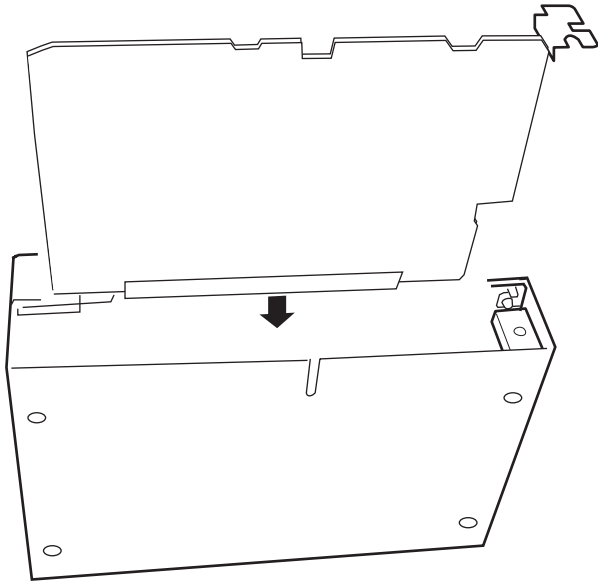

4. Secure the bracket first, and then secure the Expansion Board in place using the mounting screws.

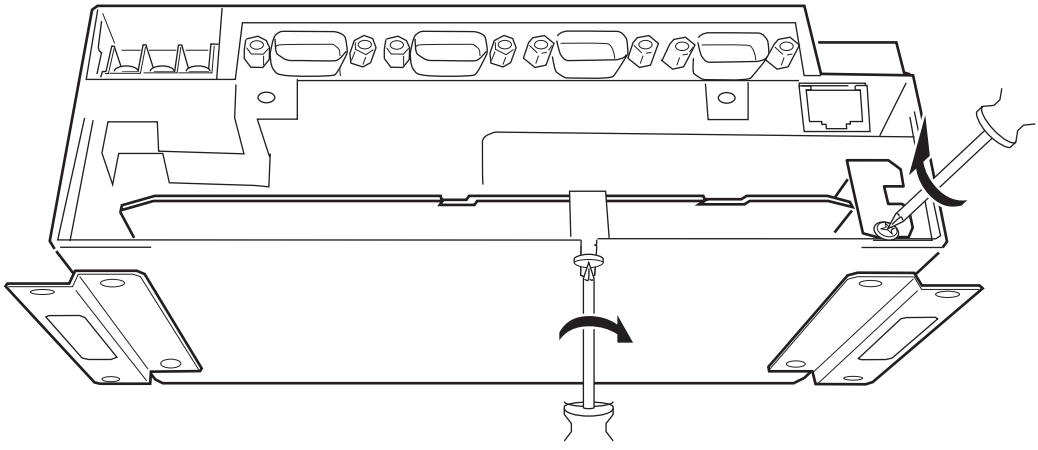

5. Replace the expansion slot cover and tighten the screws.

3-4 Installing the Open Network Controller

This section explains how to install the Open Network Controller.

3-4-1 Orientation

The Open Network Controller can be installed in any of the three ways shown in the following diagram. It can be installed either directly to a surface with screws or to DIN Track. In either case, it can be installed horizontally or vertically. Do not install the Open Network Controller in any other way.

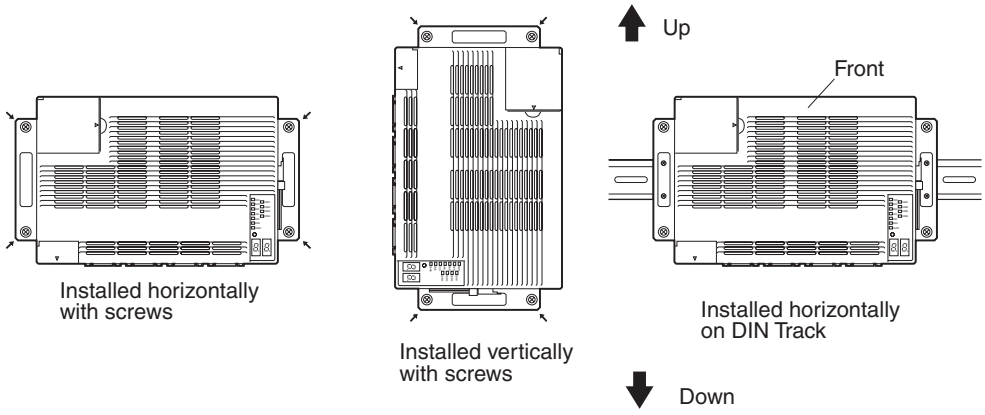

Never orient the Open Network Controller in the directions shown below.

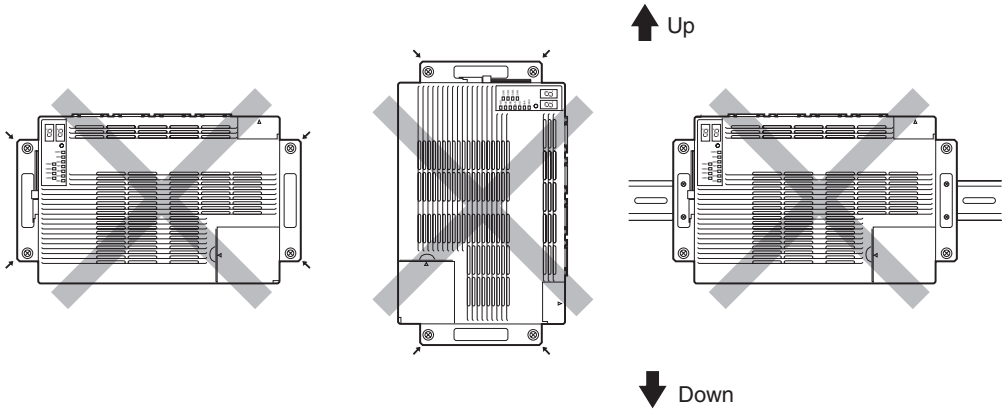

⚠ **Caution** Install the Open Network Controller only in the orientations indicated. Also, always leave at least 50 mm for ventilation above, below, to the right, to the left, and to the front of the Controller. If the installation orientation is incorrect or there is insufficient ventilation space, the internal temperature of the Controller will increase and the Controller may malfunction.

Note Allow enough space to insert and remove connectors, cables, and Memory Cards.

3-4-2 Mounting Dimensions

ITNC-EPX01 and ITNC-EPX01-DRM with DeviceNet

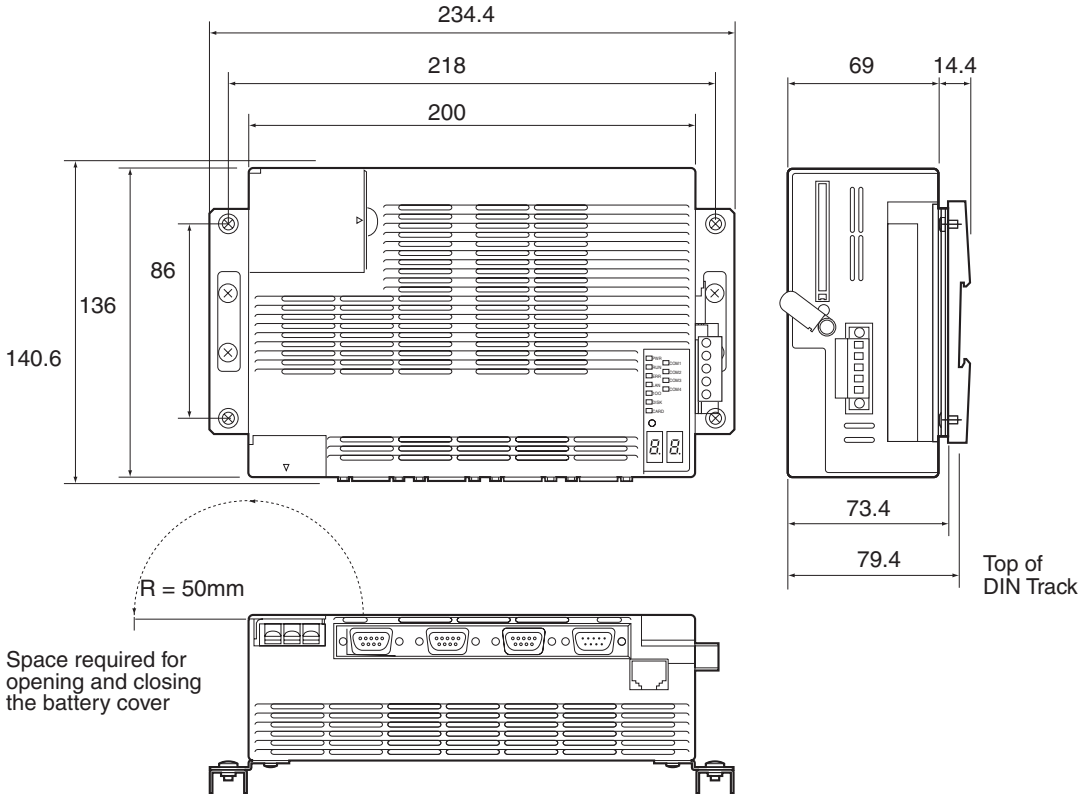

3-4-3 Installation with Screws (without DIN Track)

The M4 screws must be tightened to a torque of 0.9 N·m.

⚠ **Caution** Install the Open Network Controller only in the orientations indicated. Also, always leave at least 50 mm for ventilation above, below, to the right, to the left, and to the front of the Controller. If the installation orientation is incorrect or there is insufficient ventilation space, the internal temperature of the Controller will increase and the Controller may malfunction.

Direct Installation Using Screws

Use four M4 screws to install the Open Network Controller in the directions shown in the following diagram. M4 screws are not supplied with the Controller. A Mounting Bracket (sold separately) is not required.

Make sure that the installation direction is correct. (Refer to *3-4-1 Orientation*.)

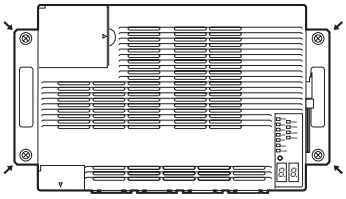

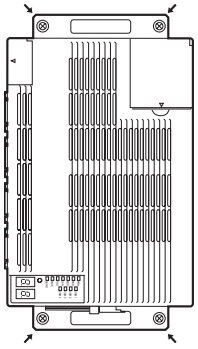

3-4-4 Installation on DIN Track

⚠ **Caution** Install the Open Network Controller only in the orientations indicated. Also, always leave at least 50 mm for ventilation above, below, to the right, to the left, and to the front of the Controller. If the installation orientation is incorrect or there is insufficient ventilation space, the internal temperature of the Controller will increase and the Controller may malfunction.

The M4 screws must be tightened to a torque of 0.9 N·m.

Horizontal Installation

1,2,3... 1. Use M4 screws to secure the ITNC-DIN01 DIN Track Mounting Brackets to the Open Network Controller, as shown in the following diagram. M4 screws are not supplied with the Controller.

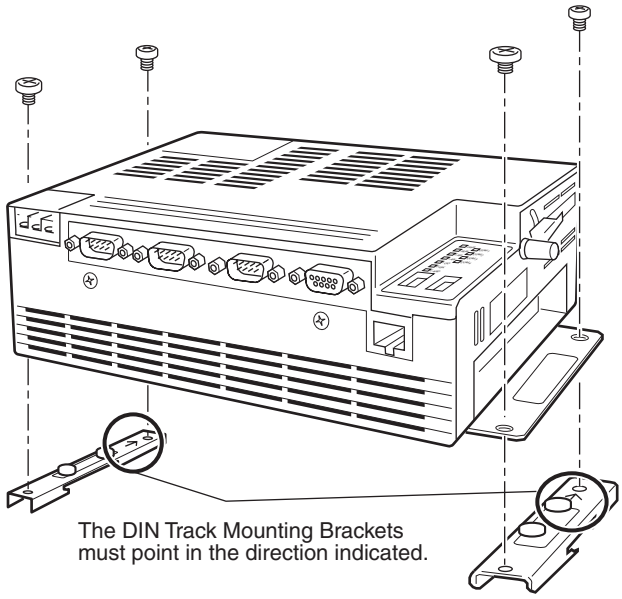

Note Be sure to attach the DIN Track Mounting Brackets in the correct orientation. If the orientation is incorrect, the Open Network Controller cannot be correctly mounted to the DIN Track.

2. Mount the Open Network Controller to the DIN Track as follows:
   a) First, insert the bottom edge of the DIN Track into the bottom (the slightly longer groove) of the DIN Track Mounting Bracket.
   b) Bring the DIN Track Mounting Bracket parallel with the DIN Track.
   c) Slide the Open Network Controller downwards. The top edge of the DIN Track will fit into the groove on the top side of the Mounting Bracket.

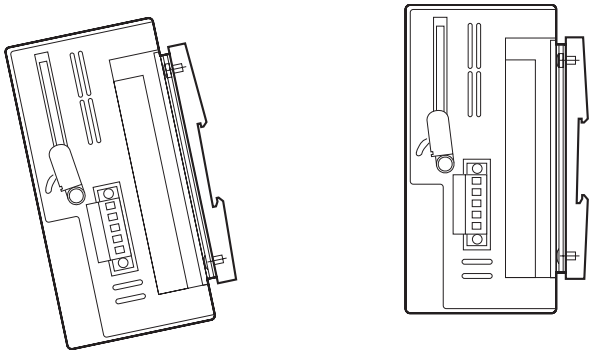

d) Secure the DIN Track Mounting Bracket and the DIN Track in place with the four screws provided.

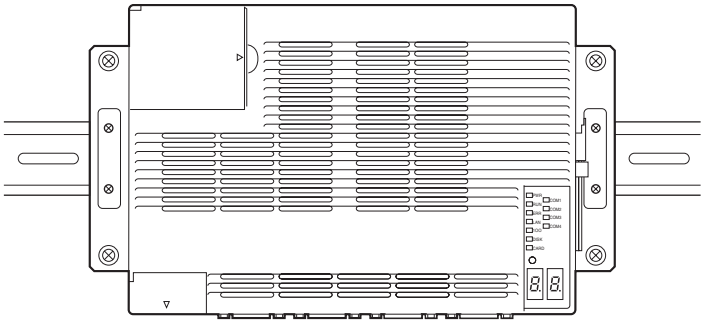

3-5 Connecting the Power Supply Cable

3-5-1 Connecting the Cable

This section explains how to connect the power supply cable. The power supply terminal block on the Open Network Controller must have 24-V DC power supplied to it.

1,2,3... 1. Open the terminal cover.

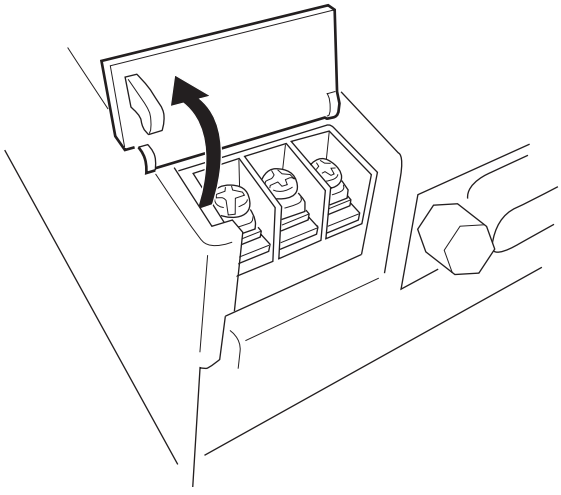

2. Loosen the power supply terminal block screws.

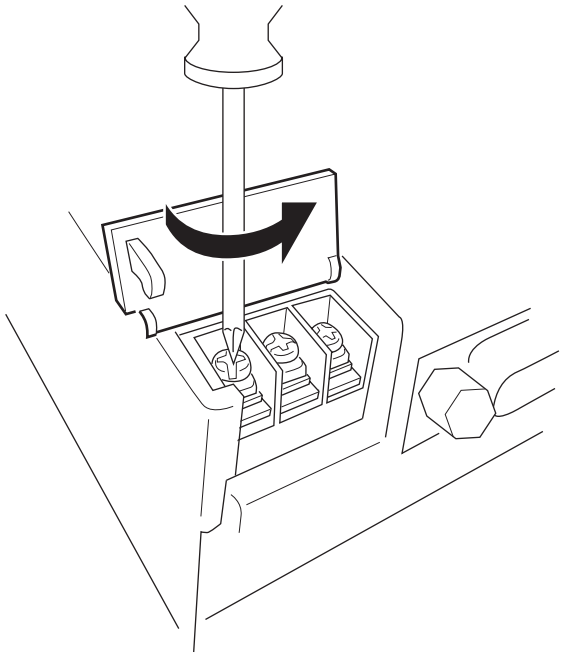

3. Connect power supply cables and ground line to the power supply terminal block. These cables must have crimp terminals.

⚠ **Caution** Tighten the terminal screws on the power supply to the torque specified in the operation manual. The loose screws may result in burning or malfunction.

Note Make sure no scrap wire gets caught in the terminal block.

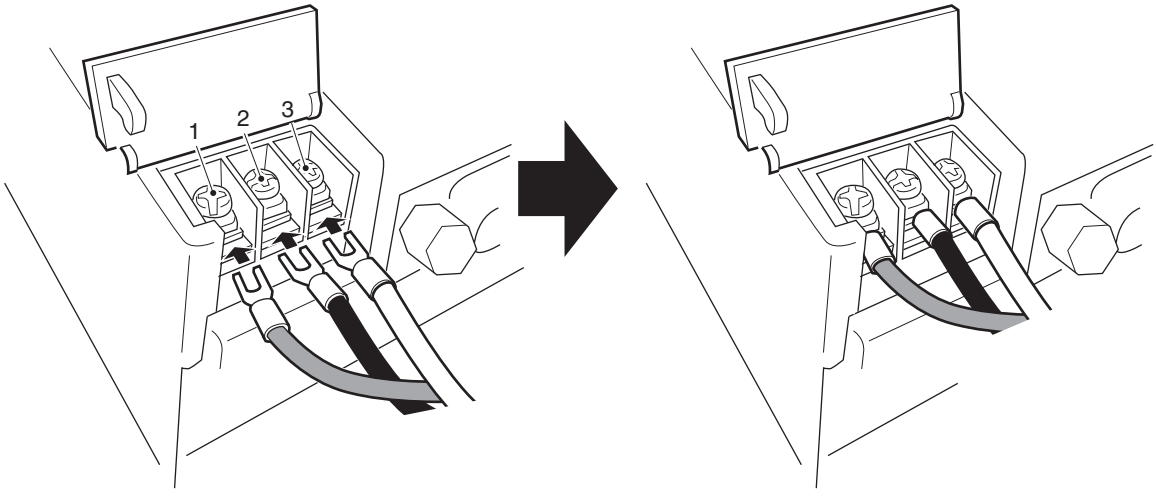

Terminal	Signal
1	+24 V DC
2	0 V
3	Functional ground terminal

DC Power Supply Provide a 24-V DC power supply that is within the allowable voltage range (20.4 to 27.6 V DC).

Power Supply Capacity The power consumption is 20 W maximum.

Note
1. Connect crimp terminals to the wires. Do not connect power lines that have simply been twisted together to the terminal block.
2. Tighten the terminal block screws to a torque of 0.8 N·m.
3. Use either forked or round crimp terminals for M3.5 screws.

Crimp Terminals for DC Power Supply

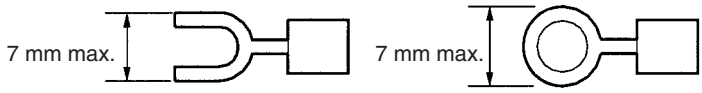

3-5-2 Wiring the Ground

The Open Network Controller has a functional ground terminal. To prevent malfunctions when there is a lot of noise and to prevent electrical shock, use an independent ground line (2 mm^2 min.) and ground to 100 Ω or less. The ground line should be less than 20 m in length.

Noise and other interference can increase if the ground is shared with other devices or connected to the wall of a building.

Use a noise filter to further reduce noise.

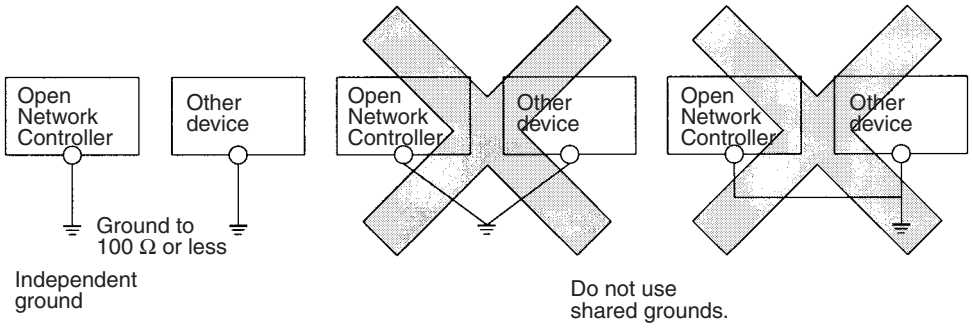

Note Ground the Controller correctly to prevent malfunction due to noise interference.

3-6 Connecting COM Port Cables

This section explains how to connect cables to COM ports 1, 2, 3, and 4.

3-6-1 Terminal Connections to COM1

Use COM1 for connecting terminals to the Open Network Controller. Terminals cannot be connected from other ports.

Note The COM1 to COM3 connectors conform to IBM PC/AT standards. Therefore, the connector lock screws are inch screws (#4-40UNC).

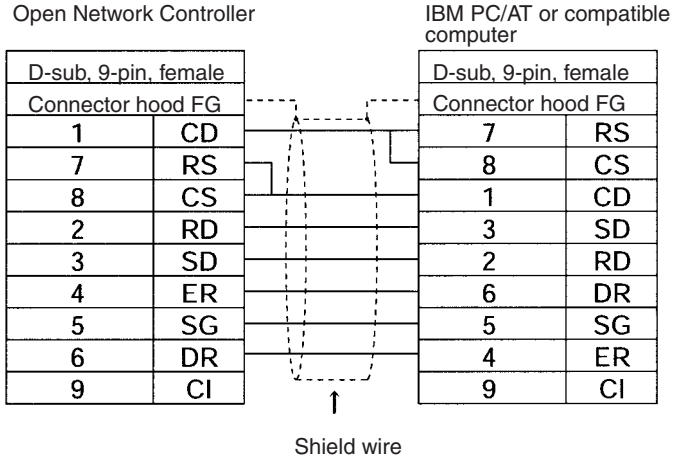

Recommended cable: XW2Z-200V or XW2Z-500V

3-6-2 SYSWAY and SYSWAY CV

1:1 Connections Using RS-232C Ports (COM1, COM2, or COM3)

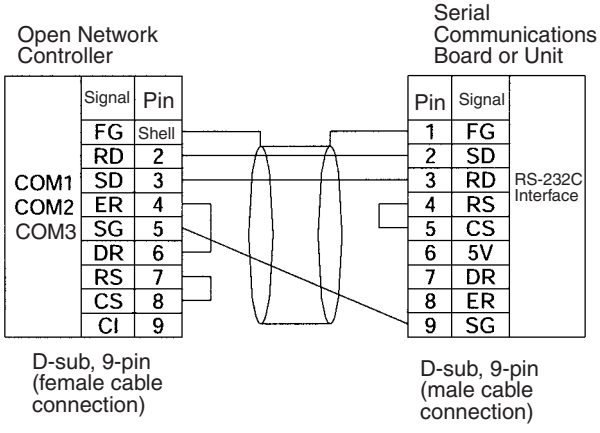

Note This example shows the connector pin layout for a CS1 Communications Board or Unit. The connector pin layout for other Host Link ports or Units will be different. Refer to the user manual for that device. Use the above signal names for reference when wiring.

1:N Connections Using RS-422A Ports (COM1, COM2, or COM3)

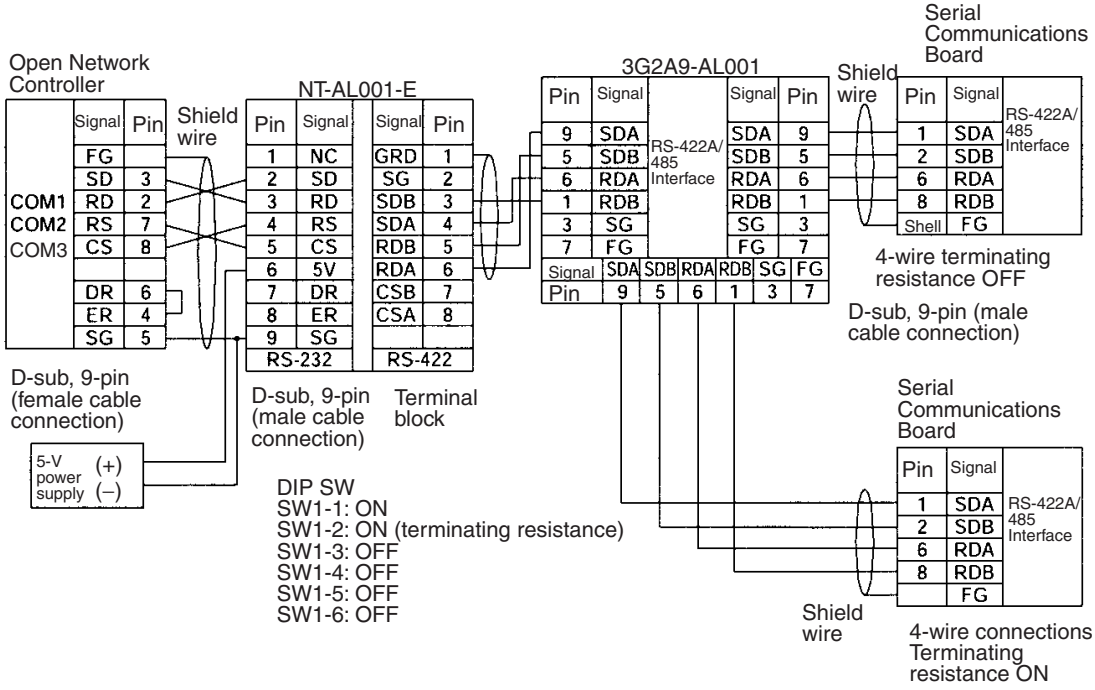

Note 1. The Open Network Controller does not have a 5-V output. Provide a 5-V power supply to the NT-AL001-E Link Adapter from an external source.

2. This example shows the connector pin layout for a CS1 Communications Board or Unit. The connector pin layout for other Host Link ports or Units will be different. Refer to the user manual for the device. Use the above signal names for reference when wiring.

1:N Connections Using RS422A Ports (COM4)

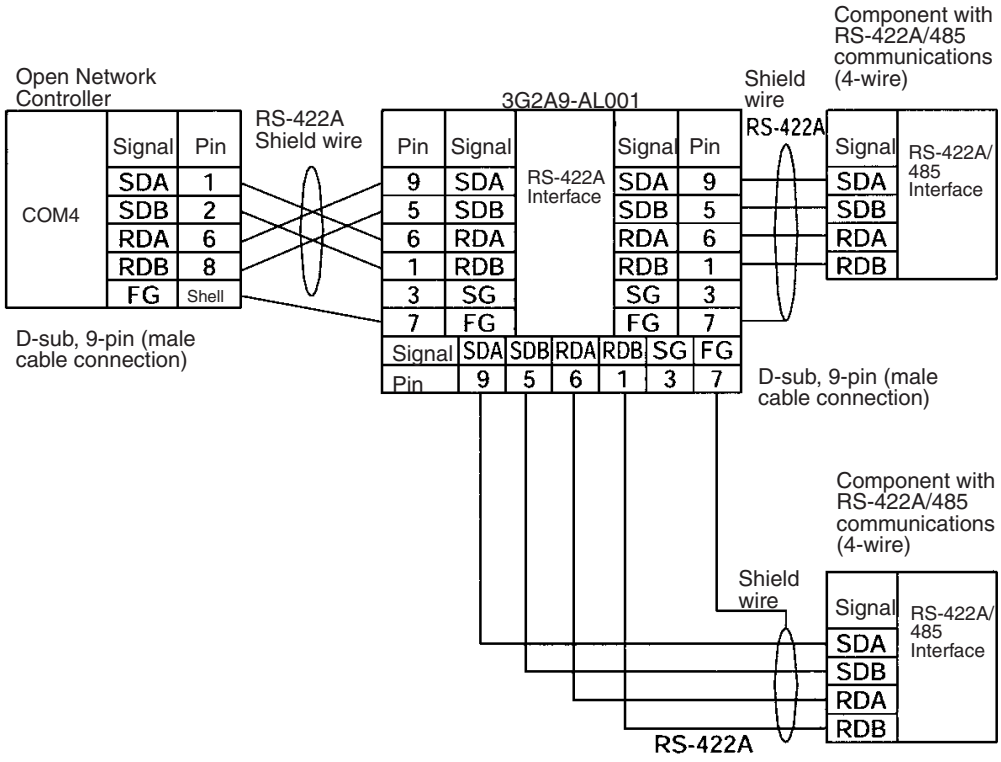

Note 1. Some devices have SDA, SDB, RDA, and RDB as well as the signal polarities in the opposite position. Check the polarity before connecting the wires.

2. The terminating resistance setting is made on the switch on the Open Network Controller, shown below. The default setting is ON.

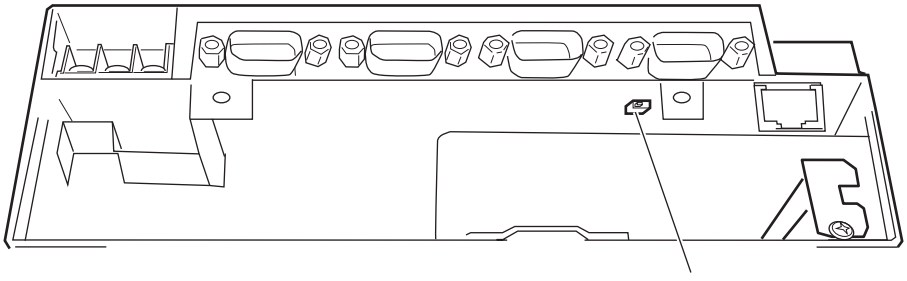

Terminating resistance switch
Left: ON (default)

3-6-3 CompoWay/F

1:N Connections Using RS-422A Ports (COM1, COM2, and COM3)

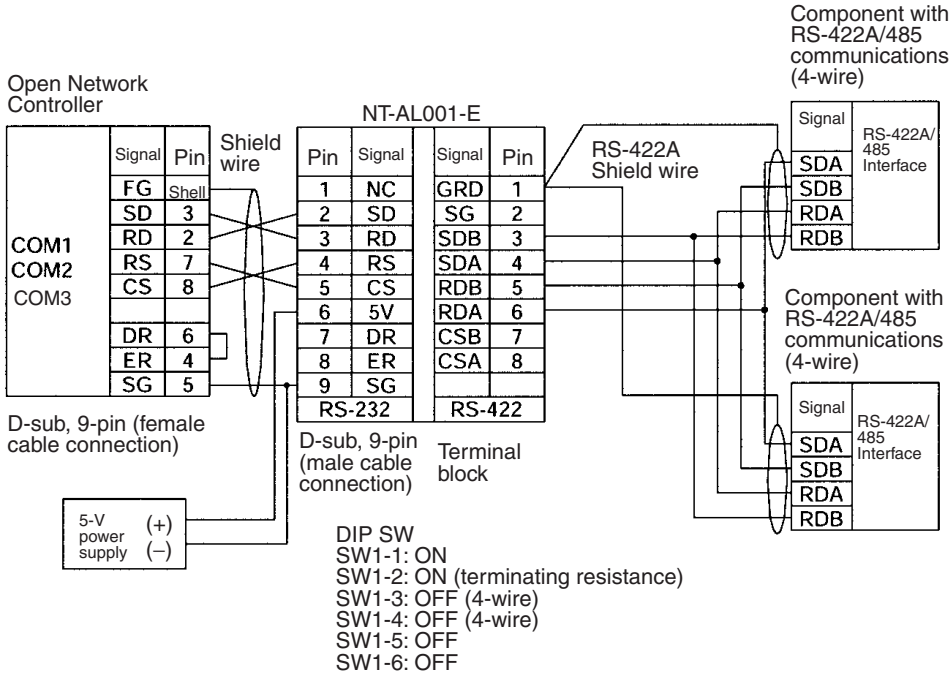

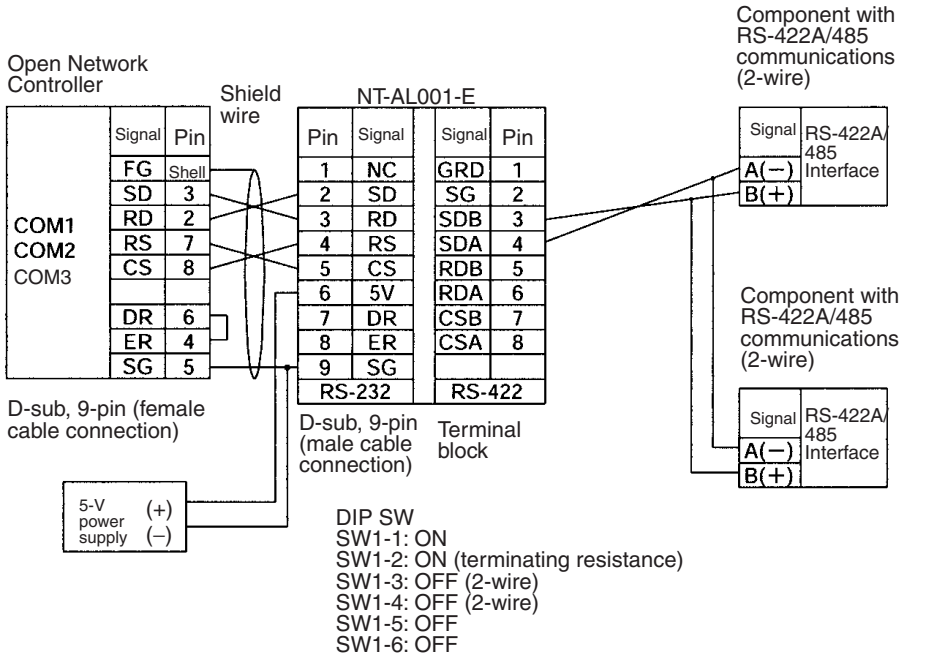

Note The Open Network Controller does not have a 5-V output. Provide an 5-V DC power to the NT-AL001-E Link Adapter from an external source.

1:N Connections Using RS485 Ports (COM4)

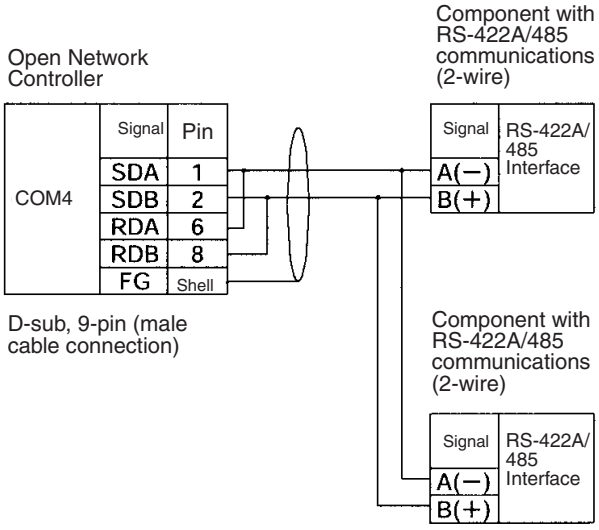

Note Some devices have SDA, SDB, RDA, and RDB as well as the signal polarities in the opposite position. Check the polarity before connecting the wires.

Connecting by Converting RS-232 to RS-422A/485 Using K3SC-10 (COM1, COM2, or COM3)

This connection method is supported by 1:N Host Link, CompoWay/F, ID Controllers, and Productivity Monitors. For details on the K3SC10, refer to the operation manual provided with it.

■ **RS-485 Connection**

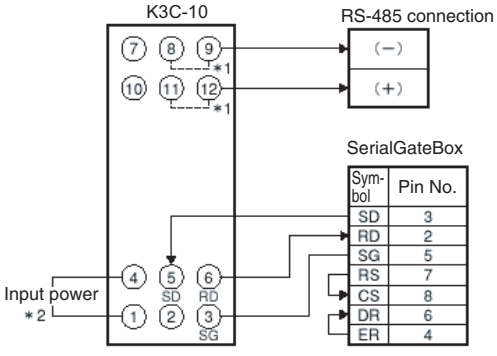

*1. Internally short 8 and 9, and 11 and 12 when RS-485 communications are selected by turning OFF DIP switch pin 9.
*2. Use an input power supply of 100 to 240 VAC or 24 VAC/VDC (no polarity).

■ **RS-422A Connection**

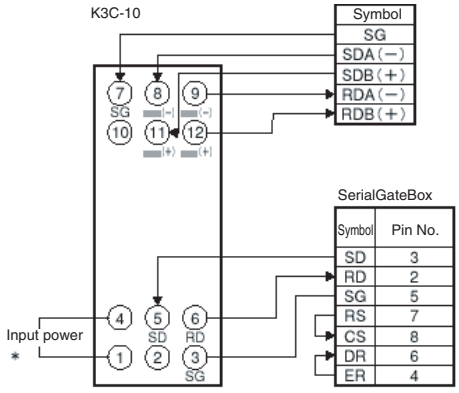

* Use an input power supply of 100 to 240 VAC or 24 VAC/VDC (no polarity).
Connect SG at the RS-422A device only when required by the connected device.

3-6-4 PT Connections (COM1, COM2, or COM3)

Prepare the following cables and connect the COM port (COM1, COM2, or COM3) of the Open Network Controller to port A of the PT.

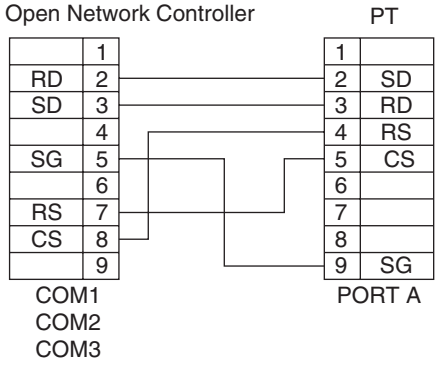

3-7 Connecting DeviceNet Cables

This section explains how to connect DeviceNet cables to the Open Network Controller.

3-7-1 Connectors

Model	Specifications	Manufacturer
MSTB2.5/5-ST5.08AU	For node connections. Connector screws not supplied.	Phoenix Contact Product No.: 1752399
XW4B-05C1-H1-D	For node connection and T-branch Tap connection. Connector screws supplied with ITNC-EPX01-DRM model.	OMRON
XW4B-05C4-T-D	For multi-drop node connections. Connector screws not provided.	OMRON

3-7-2 Connecting Communications Cables

This section explains how to prepare and connect the communications cables to connectors for the DeviceNet Network.

Use the following procedure to prepare and connect the communications cables to the connectors. Although some connectors are equipped with set screws and some are not, the methods used to connect the cables to the connectors are the same.

1,2,3...

1. Remove about 30 mm of the cable covering, being careful not to damage the shield weaving underneath. Do not remove more than about 30 mm; removing too much of the covering can result in short circuits.

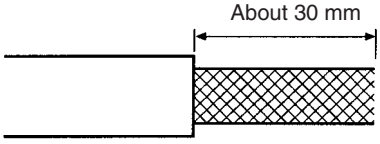

2. Carefully peel back the weaving. You will find the signal lines, power lines, and the shield wire. The shield wire will be loose on the outside of the other lines, but it is harder than the weaving and should be easily identified.

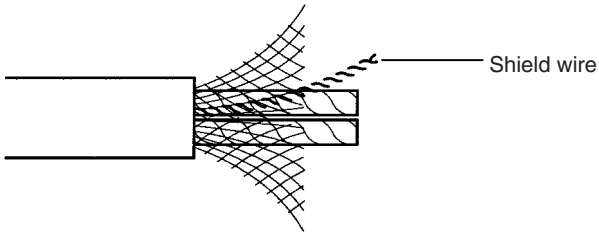

3. Remove the exposed weaving, remove the aluminum tape from the signal and power lines, and strip the covering from the signal and power lines to the proper length for the crimp terminal connectors. Twist together the wires of each of the signal and power lines.

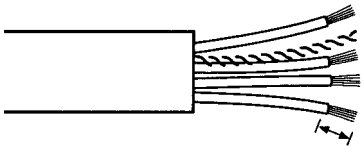

Strip to match the crimp terminals

4. Attach the crimp terminals to the lines and then cover any exposed areas of the cable and lines with electricians tape or heat-shrinking tubes.
5. Orient the connector properly, loosen the line set screws, and then insert the lines in order: Black, blue, shield, white, and then red. The wiring method is the same regardless of whether or not the connector is equipped with set screws.

Connector with Set Screws

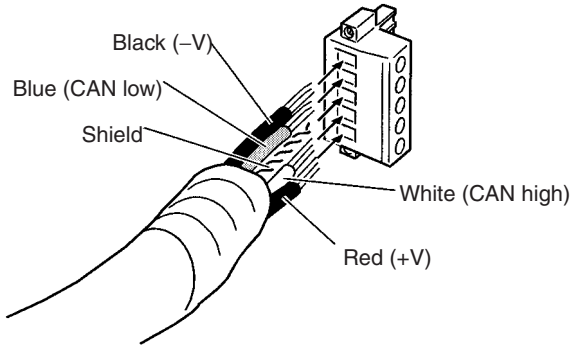

Note Be sure the line set screws are sufficiently loosened before attempting to insert the lines. If these screws are not loose, the lines will enter the gaps in the back of the connector and will not lock properly.

There are colored stickers provided on the Master and Slaves that match the colors of the lines to be inserted. Be sure that the colors match when wiring the connectors. These colors are as follows:

Color	Signal
Black	Power line, negative voltage (–V)
Blue	Communications line, low (CAN low)
---	Shield
White	Communications line, high (CAN high)
Red	Power line, positive voltage (+V)

6. Tighten the line set screws for each line in the connector. Tighten the screws to 0.25 to 0.3 N·m.

   You will not be able to tighten these screws with a normal screwdriver, which narrows to a point at the end. You will need a screwdriver that is consistently thin for the entire length.

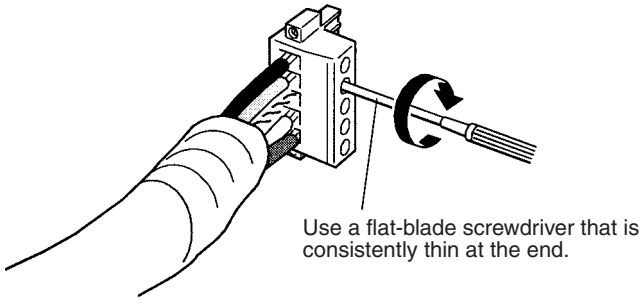

Note The following screwdriver is available from OMRON.

Model Number: XW4Z-00C

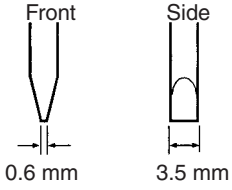

Multi-drop Connections with Accessory Connector (Thin Cables Only)

The connectors provided with the Controllers can be used for a multi-drop connection as long as thin cables are being used, just insert both lines into the same hole in the connector. Be sure to use crimp connectors on both lines.

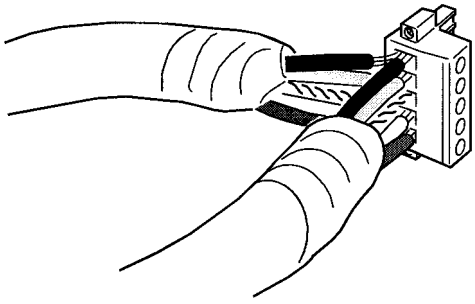

Multi-drop Connections with Special Connector (Thin or Thick Cables)

A multi-drop wiring connector (sold separately) can be used to wire a multi-drop connector for either thin or thick cables. This multi-drop wiring connector is required to wire a multi-drop connection with thick cables, which are too thick for two lines to fit into the connector provided with the Controllers.

The multi-drop wiring connector cannot always be used with Master Units or the CQM1 I/O Link Units because it may come into contact with the Units mounted next to the Master Unit or the CQM1 I/O Link Unit. If this happens, use a T-branch Tap to wire the connection.

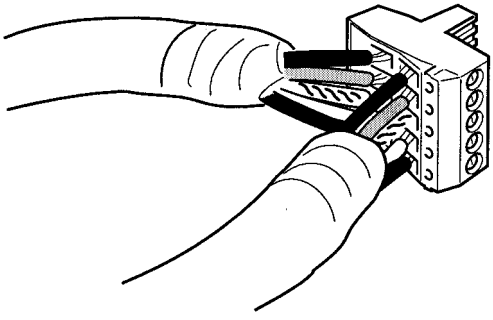

Note

1. Before connecting the communications cables, turn OFF the power supply to all PLCs, Slaves, and communications power supplies.
2. Use crimp terminals for wiring. Connecting bare twisted wires can cause the cables to come off, break, or short circuit, most likely resulting in incorrect operation and possible damage to the Units.
3. Use suitable crimp tools and crimping methods when attaching crimp terminals. Consult the manufacturer of the tools and terminals you are using. Inappropriate tools or methods can result in broken wires.
4. Be extremely careful to wire all signal lines, power lines, and shield wire correctly.
5. Tighten all set screws firmly. Tighten to a torque of 0.25 to 0.3 N·m.
6. Wire the signal lines, power lines, and shield wire so that they do not become disconnected during communications.
7. Do not pull on communications cables with excessive force. They may become disconnected or wires may break.
8. Allow leeway so that communications cables do not have to be bent further than natural. The Cables may become disconnected or wires may break if the cables are bent too far.
9. Never place heavy objects on communications cables. They may break.
10. Double-check all wiring before turning ON the power supply.

3-7-3 Connecting Communications Cables to T-branch Taps

This section shows how to connect a communications cable with a connector attached to a T-branch Tap. There are two kinds of T-branch Taps. One makes a single branch and the other makes three branches, but the cable connections are the same for both.

The connectors indicated by asterisks in the following diagrams have the least resistance and these connectors should be used for the trunk line connections. When using a T-branch Tap on a drop line, we recommend connecting the longest drop line to these connectors.

DCN1-1C

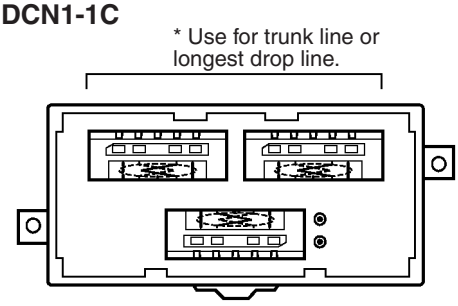

DCN1-3C

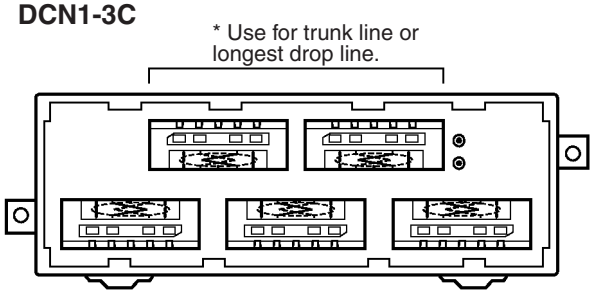

Align the cable connector with the socket on the T-branch Tap as shown in the following diagram and fully insert the connector into the socket. Tighten the set screws to secure the connection. Tighten the screws to a torque of 0.25 to 0.3 N·m.

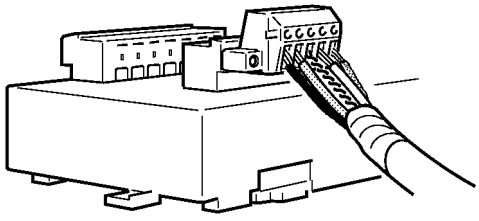

Note To avoid damaging the cable or breaking wires, don't pull on the cable or bend it too sharply when connecting it to the T-branch Tap. Also, never put heavy objects on top of the cable.

3-7-4 Connecting Terminating Resistors

Terminating Resistors must be connected at each end of the trunk line. This section shows how to connect the Terminating Resistors.

T-branch Tap Terminating Resistor

A terminating resistor is included with the T-branch Tap. Clip the leads on the resistor to about 3 mm and insert it into the T-branch Tap as shown in the following diagram. The resistor can face in either direction.

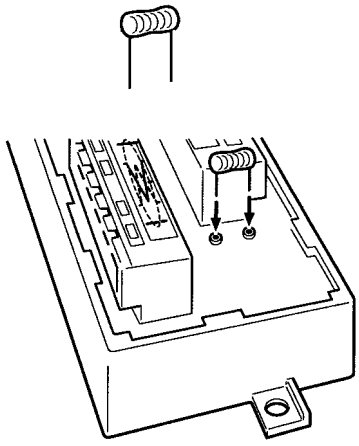

Terminal-block Terminating Resistor

A terminating resistor is built into the Terminal-block Terminating Resistor. To connect the cable to the Terminating Resistor, attach standard M3 crimp terminals to the signal wires and securely screw the terminals to the Terminal-block Terminating Resistor. Tighten to a torque of 0.3 to 0.5 N·m.

Crimp Terminals for DC Power Supply

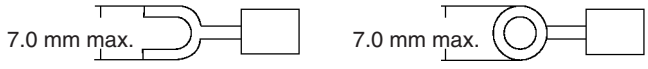

Note To avoid damaging the cable or breaking wires, don't pull on the cable or bend it too sharply when connecting it to the terminal block. Also, never put heavy objects on top of the cable.

3-7-5 Connecting Communications Cables to Nodes

This section shows how to connect a communications cable with a connector attached to a Master or Slave.

Align the cable connector with the socket on the node as shown in the following diagram and fully insert the connector into the socket. Tighten the set screws 0.25 to 0.3 N·m to secure the connection.

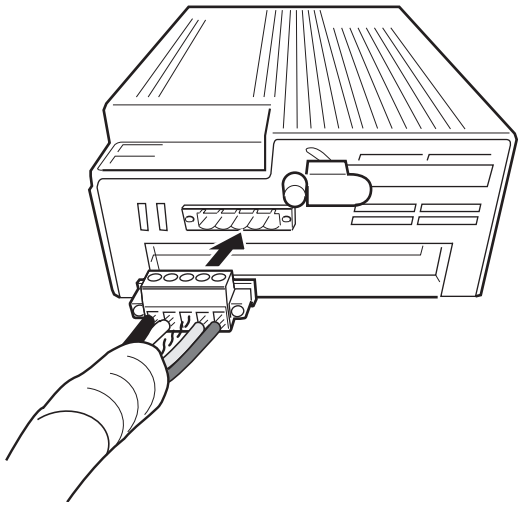

Note To avoid damaging the cable or breaking wires, don't pull on the cable or bend it too sharply when connecting it to the terminal block. Also, never put heavy objects on top of the cable.

3-8 Connecting Ethernet Cables

This section explains how to connect Ethernet cables to the Open Network Controller.

The 10Base-T or 100Base-TX cable is inserted into the Ethernet connector on the Open Network Controller.

Note Use a category 5 network cable when using 100Base-TX communications.

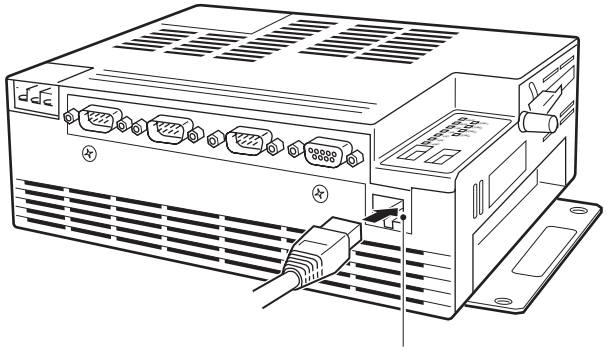

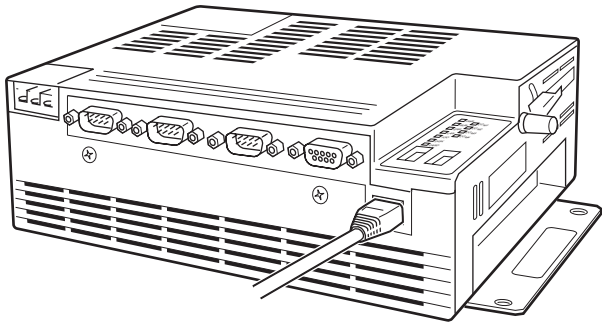

Note

1. When the Open Network Controller and personal computer are directly connected, use a cross Ethernet cable.
2. When the Open Network Controller and personal computer are connected via a hub or other device, use straight Ethernet cable to connect the Open Network Controller to the hub.

3-9 Handling Memory Cards

This section explains how to mount, remove, and format Memory Cards. Memory Cards that are formatted in MS-DOS or QNX can be used with the Open Network Controller.

3-9-1 Memory Card Models

Model	Specifications
HMC-EF372	30 MB
HMC-EF672	64 MB
HMC-EF282	256 MB
HMC-EF582	512 MB

Note

1. OMRON Memory Cards used with Open Network Controller version 1 (IT-NC-EIS01/EIX01(-DRM/-CST)) can also be used.
2. When using a Memory Card produced by another manufacturer, check the environmental resistance of the cards.
3. Never turn OFF the power supply to the Open Network Controller while accessing the Memory Card. If the power is turned OFF, the Card may be damaged and become unusable.

Use a HMC-AP001 Memory Card Adaptor when inserting a Memory Card into the PCMCIA slot of a personal computer or other device.

3-9-2 Inserting and Removing Memory Cards

Note Always secure the Memory Card bracket when a Memory Card is inserted. If the bracket is not used, the Memory Card may become dislodged due to vibration or other causes.

Use either of the following two methods to mount a Memory Card.

- Insert the Memory Card in the Open Network Controller, and turn ON the power to the Open Network Controller.
- Turn ON the power to the Open Network Controller, and then insert the Memory Card and press the card switch.

The following procedure describes the method of turning ON the power to the Open Network Controller and then inserting the Memory Card.

1,2,3...

1. Loosen the screw on the bracket

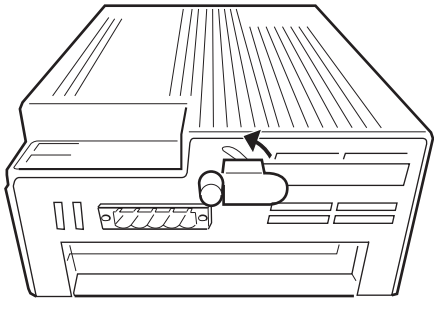

2. Insert a Memory Card it into the card slot. Be sure to insert it firmly and in the proper orientation, not upside down. The Memory Card must have been previously formatted in the QNX or MS-DOS format.

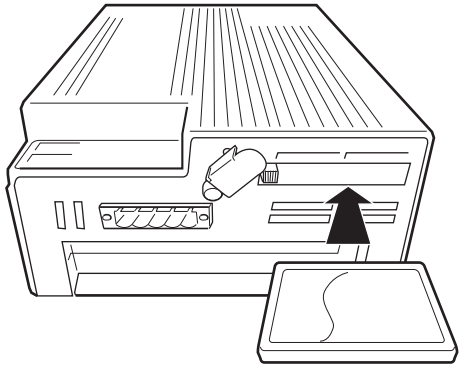

3. Press the card switch. This prompts the operating system to recognize the Memory Card and mount it to the file system. The CARD indicator will light.

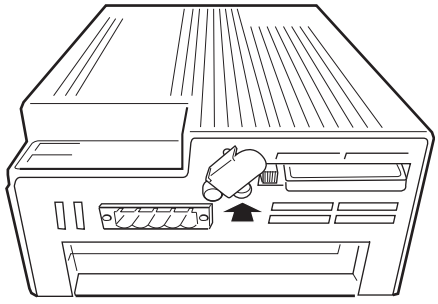

4. Twist the card bracket to position it over the Memory Card and screw the bracket firmly in place.

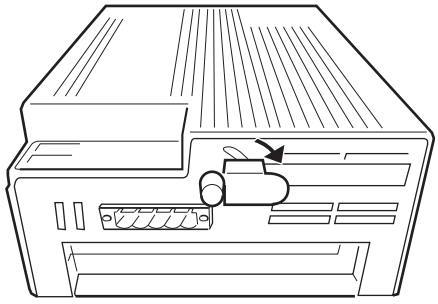

Mount Directory

The directory where the Memory Card will be mounted depends on the format. When the card switch is pressed, the Memory Card will be automatically mounted in one of the following directories.

Format	Directory
QNX	/kd
MS-DOS	/dos/c

Note The mount directory of the Memory Card has changed to /kd for the ITNC-EPX01(-DRM) and later models. The directory /hd is used for the internal disk.

Unmounting and Removing Flash Cards

This section explains how to unmount and remove the Memory Card.

Note

1. Before removing the Memory Card, always press the card switch to unmount the Card.
2. Check that the CARD indicator is not lit before pressing the card eject button.

3. Do not unmount the Memory Card when optional software that accesses the Memory Card is running. A malfunction may occur.

1,2,3... 1. Loosen the screw on the card bracket and twist the bracket as shown in the diagram.

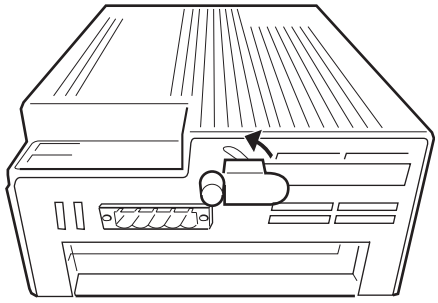

2. Press the card switch.
   - When the card switch is pressed, the Memory Card will be automatically unmounted.
   - The CARD indicator will go out.

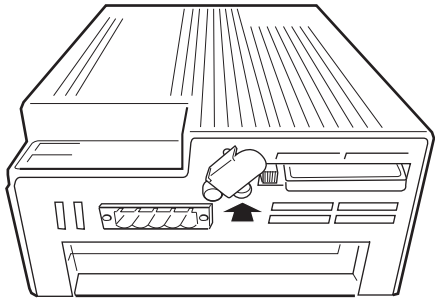

3. Check that the CARD indicator is not lit and press the card eject button.

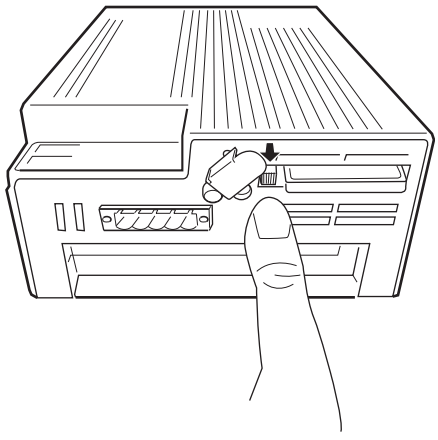

3-9-3 Formatting Memory Cards

This section explains how to format a Memory Card in QNX format.

1,2,3... 1. Turn ON the Open Network Controller power supply.

Note Check that the CARD indicator is not lit.

2. Insert a Memory Card into the card slot.

Note Do not press the card switch at this point.

3. Log onto the Open Network Controller via Ethernet or a serial connection. Refer to *Appendix C Logging on to the Open Network Controller* for details.
4. From the console, input the following:

   `#cardQnxFormat↵`

To confirm that the card has been formatted, press the Card switch to mount the Memory Card. The Memory Card will be automatically mounted on one of the following directories.

Format	Directory
QNX	/kd
MS-DOS	/dos/c

Note With ONC Ver. 1, the method for formatting in QNX format is different from that described above. For details on formatting in QNX format when using Ver. 1, refer to the Open Network Controller, Ver. 1, operation manual.

SECTION 4
Software Settings (Basic)

This section describes the various methods that can be used to set the contents of the environment setup files for the Open Network Controller.

4-1 Overview 80
4-2 LAN Settings (IP Address). 80
4-2-1 Using ONC_wizard to Change IP Address 81
4-2-2 Executing the ARP Command to Change the IP Address 82
4-2-3 Checking IP Addresses 83
4-3 Basic Setting Tool Operations 84
4-3-1 Overview of Basic Operations 84
4-3-2 English Setting Tool. 84
4-3-3 Logging On and Off. 85
4-3-4 ONC Reboot. 89
4-3-5 Common Operations 90
4-4 Setting Menu List 92
4-5 Menu Setting 93
4-6 Setting IP Addresses. 95
4-6-1 ONC IP Address. 95
4-6-2 Other Host IP 95
4-6-3 IP Route 95
4-7 Setting Startup Services 96
4-7-1 Startup Services 96
4-7-2 Gateway Network. 97
4-8 Serial Port Settings 98

4-1 Overview

This section describes the software settings procedures for the Open Network Controller.

The Setting Tool must be used to set the Open Network Controller. The Setting Tool is used to set the Open Network Controller software from the personal computer using the Web browser. Therefore, an IP address must be set for the Open Network Controller so that the Open Network Controller and personal computer can be connected through the Ethernet. (Refer to *4-3 Basic Setting Tool Operations*.

1,2,3...

1. Set the Open Network Controller's IP address.
   (Refer to *4-2 LAN Settings (IP Address)* and *4-6 Setting IP Addresses*.)
2. Restart the Open Network Controller (press the restart switch or turn the power OFF and ON again).
   (Refer to *4-3 Basic Setting Tool Operations*.)
3. Log on to the Setting Tool.
   (Refer to *4-3 Basic Setting Tool Operations*.)
4. Set the startup service (Network Provider to be used).
   (Refer to *4-7 Setting Startup Services*.)
5. Set the serial communications (COM port to be used).
   (Refer to *4-8 Serial Port Settings*.)

   Note Set the COM port only when using serial communications with FA devices.
6. Set each Network Provider (NP) to be used.
   (Refer to *SECTION 5 CPU_UNIT through SECTION 16 Utilities*.)
7. Restart the Open Network Controller (press the restart switch or turn the power OFF and ON again).
   (Refer to *4-3 Basic Setting Tool Operations*.)

4-2 LAN Settings (IP Address)

Before using the Open Network Controller, the IP address and other LAN settings must be set.

Note The default IP address for the Open Network Controller is 10.0.0.1, and the default Subnet mask is 255.0.0.0.

The IP address can be changed using either of the following three methods.

- Log on to the Open Network Controller using the COM1 connection (refer to *Appendix C Logging on to the Open Network Controller*, and change the IP address using the built-in ONC_wizard (simple Setting Tool).
- Set the Open Network Controller's DIP switch 2, pins 1 and 8 to ON. (Refer to *3-2 DIP Switch Settings*.) After restarting in IP address rewrite mode, execute from the personal computer the command that displays and sets ARP (Address Resolution Protocol) tables.
  (There is no need to match the IP address at the personal computer with the network of the IP address for the Open Network Controller.)
- Match the IP address at the personal computer (e.g., 10.0.0.2) with the network of the default IP address for the Open Network Controller (10.0.0.1). After logging into telnet via the Ethernet, change the IP address using ONC_wizard (simple Setting Tool).

The Open Network Controller must be restarted after changing the IP address with any of the above methods.

The procedures used to change the IP address (ONC_wizard method and ARP command method) are described next.

Note When the IP address has been changed, after the personal computer and the Open Network Controller can be connected through Ethernet, the ONC Setting Tool can be used to change the LAN settings. For details, refer to *4-6 Setting IP Addresses*.

4-2-1 Using ONC_wizard to Change IP Address

1,2,3...

1. From a terminal on the personal computer, log on to the Open Network Controller as *root* with a terminal connection (COM1). (Refer to *Appendix C Logging on to the Open Network Controller*.)
   Alternatively, set the IP address of the personal computer so that it is on the same network as the default IP address (10.0.0.1) of the Open Network Controller (e.g., use 10.0.0.2 for the personal computer). Then log on using telnet via the Ethernet. (Refer to *Appendix C Logging on to the Open Network Controller*.)
2. Input ***ONC_wizard*** from the terminal prompt and press the **Enter** Key. (Inputs are case sensitive, so check that use of upper and lower case are correct.)
   The Setting Tool will start and the following Main Menu will be displayed.

```
Setup Utility Ver.2.00 [MAIN MENU]
-------------------------------------------------
 1. SYSTEM SETUP
 2. exit
-------------------------------------------------
Number Selection(1-2,n:next,p:prev,q:quit):_
```

3. Input ***1*** and press the **Enter** Key. The following System Setup Menu will be displayed.

```
Setup Utility Ver.2.00 [SYSTEM SETUP MENU]
-------------------------------------------------
 1. SubnetMask
 2. IpRoute
 3. Host File
 4. exit
-------------------------------------------------
Number Selection(1-4,n:next,p:prev,q:quit):_
```

4. Input ***4*** and press the **Enter** Key. The following Host File will be displayed.

```
Setup Utility Ver.2.00 [Host File]
-------------------------------------------------
 1. 127.1              localhost localhost.my.domain
 2. 10.0.0.1 onchost
 3.
 4.
 5.
 6.
 7.
 8.
 9.
10.
-------------------------------------------------
Number Selection(1-10,n:next,p:prev,q:quit):_
```

Note a) The default IP address of the Open Network Controller is 10.0.0.1.

b) All setting changes including the IP address are enabled after the Open Network Controller is restarted (using the restart switch or turning the power OFF and ON again).

5. Input ***1*** and press the **Enter** Key. Then input the new IP address, followed by a space, and **onchost**. Then press the **Enter** Key. The following example uses 192.168.0.50.

```
10.
-------------------------------------------------
2:192.168.0.50 onchost_
```

The following window will be displayed.

```
Setup Utility Ver.2.00 [Host File]
-------------------------------------------------
 1. 127.1              localhost localhost.my.dom
 2. 192.168.0.50 onchost
 3.
 4.
 5.
 6.
 7.
 8.
 9.
10.
-------------------------------------------------
Number Selection(1-10,n:next,p:prev,q:quit):_
```

Note Match the Subnet mask to the LAN to which the Open Network Controller is connected.

6. Input ***q*** and press the **Enter** Key to return to the System Setup Menu.
7. Input ***5*** and press the **Enter** Key to return to the Main Menu.
8. Input ***2*** and press the **Enter** Key to display the following Exit Menu.

```
Setup Utility Ver.2.00 [EXIT MENU]
-------------------------------------------------
 1. Discard Changes & exit
 2. Save Changes & exit
 3. Make Temporary File & exit
 4. MainMenu
-------------------------------------------------
Number Selection(1-4,n:next,p:prev,q:quit):_
```

Note Select ***1*** to discard the settings and exit ONC_wizard.

9. Input ***2*** and press the **Enter** Key to save the settings. The ONC_wizard will close.

The procedure for changing the IP address is completed. Restart the Open Network Controller.

4-2-2 Executing the ARP Command to Change the IP Address

The following method changes the IP address by executing from the personal computer the command that displays and sets ARP (Address Resolution Protocol) tables.

Note Before setting with this method, physically connect the personal computer that will execute the command to the Open Network Controller using an Ethernet connection.

In the following procedure example, **arp** is executed from the command prompt of Windows 2000, and the Open Network Controller's (MAC ID: 00-00-00-01-01-01) IP address is changed to 192.168.0.50.
The MAC ID is provided on the label on the front panel of the Open Network Controller.

1,2,3...

1. Turn ON pins 1 and 8 of DIP switch 2. (Refer to *3-2 DIP Switch Settings*.)
2. Restart the Open Network Controller.

3. Check that the RUN indicator is flashing.
4. From Windows 2000, select ***Start***, ***Programs***, ***Accessories***, and ***Command Prompt***. The command prompt window will be displayed.
5. Add the IP address and MAC ID to the ARP table. Input the following command line in the command prompt window.

   ```
   C:\>arp -s 192.168.0.50 00-00-00-01-01-01
   ```

   Press the **Enter** Key.
6. Check that the IP address and MAC ID are set correctly. Input the following command line.

   ```
   C:\>arp -a
   ```

   Press the **Enter** Key. If the settings are correct, the following type of information will be displayed.

   ```
   Interface: 10.3.68.26 on Interface 0x1000003
   Internet Address    Physical Address      Type
   192.168.0.50        00-00-00-01-01-01     static    (Check this line.)
   ```
7. Send the ping command to the Open Network Controller to set the IP address. If the response is returned correctly, the setting is completed. If the IP address is set correctly, the following information will be displayed.

   Note The ping command is not sent to check whether the IP address has been set. Sending the ping command to the Open Network Controller will set the IP address.

   ```
   C:\>ping 192.168.0.50 [Enter Key]
   Pinging 192.168.0.50 with 32 bytes of data:

   Request timed out.
   Request timed out.
   Request timed out.
   Reply from 192.168.0.50: bytes=32 time<10ms TTL=254 (Check this line.)

   Ping statistics for 192.168.0.50:
        Packets: Sent = 4, Received = 1, Lost = 3 (75% loss),
   Approximate round trip times in milliseconds:
       Minimum = 0 ms, Maximum = 0ms, Average = 0ms
   ```

   Note The Open Network Controller's MAC address is given on the Ethernet address seal at the top of the Open Network Controller.
8. The IP address setting change is completed. Turn OFF pins 1 and 8 of DIP switch 2, and restart the Open Network Controller.

4-2-3 Checking IP Addresses

The following two methods can be used to check IP addresses.

- Send the ping command to the Open Network Controller from the personal computer.
- Turn ON pin 2 of DIP switch 2, (Refer to *3-2 DIP Switch Settings*.)

Send the ping command to the Open Network Controller from a personal computer set to an IP address on the same network. If the following information is returned, the setting is correct. The following details show when the IP address is checked using the Windows command prompt.
(Example: Personal computer IP address: 192.168.0.10, Open Network Controller IP address: 192.168.0.50)

```
C:\>ping 192.168.0.50 [Enter Key.]
Ping 192.168.0.50 with 32 bytes of data:
Reply from 192.168.0.50: bytes=32 time<10ms TTL=254
Reply from 192.168.0.50: bytes=32 time<10ms TTL=254
Reply from 192.168.0.50: bytes=32 time<10ms TTL=254
```

If the following information is displayed, the setting is not correct.

```
C:\>ping 192.168.0.50 [Enter Key.]
Ping 192.168.0.50 with 32 bytes of data:
Request timed out.
Request timed out.
Request timed out.
```

Check the IP address settings.

4-3 Basic Setting Tool Operations

4-3-1 Overview of Basic Operations

The Open Network Controller Setting Tool is used to perform the basic settings of the Open Network Controller from the Web browser on the personal computer. The Setting Tool is pre-installed in the Open Network Controller.

Perform the following operations to use the Open Network Controller Setting Tool.

- Start the Web browser on the personal computer.
- Access the top page of the Open Network Controller (specify the IP address of the Open Network Controller).
- Select ***Go To Maintenance Menu (in English)***.
- Select ***the Setting Tool for Basic Setting***.
- Enter password.

These operations are explained further in the following pages.

Note The methods for setting the Open Network Controller operating environment are explained in *SECTION 15 Setup Examples* using various network examples. Refer to these examples to understand the setting procedure.

4-3-2 English Setting Tool

The Open Network Controller is pre-installed with the Japanese version of the Setting Tool. Therefore, use the following procedure to install the English version of the Setting Tool.

1,2,3...

1. Display the top page of the Open Network Controller Web Service Ver. 2, and clickthe icon as shown below.

2. The Basic Setting Tool Installation Page will be displayed. Click the **Install Start** Button on the left to start installing the English version of the Setting Tool.

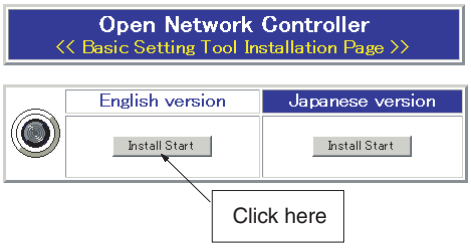

3. During installation, the following window will be displayed.

4. When installation is completed, the following window will be displayed. Click the **window close** Button to complete the installation procedure.

4-3-3 Logging On and Off

Access the Open Network Controller from the Web browser (Microsoft Internet Explorer 5.5 or later. SP2 or later is recommended) on a personal computer on the network. Password entry and logon is required to use the Open Network Controller Setting Tool.

Note

1. Microsoft Internet Explorer 5.5 or later (SP2 or later) is the recommended Web browser.
2. With the Open Network Controller Setting Tool, maintenance of the Open Network Controller from the Web browser can be performed by one user only.
   If more than one user performs maintenance simultaneously on the same Open Network Controller, the monitored status will change, and the changes will not be reflected correctly.

Procedure from Web Browser Startup to ONC Setting Tool Startup

1,2,3...

1. Start up the Web browser on the personal computer.
2. After specifying the IP address (or host name) of the Open Network Controller using the Web browser, as shown in the following example, press the **Enter** Key.

Note The default IP address of the Open Network Controller is 10.0.0.1, as shown above. To change the Open Network Controller IP address, input the correct IP address.

When the connection to the Open Network Controller is correct, the Open Network Controller top page will be displayed.

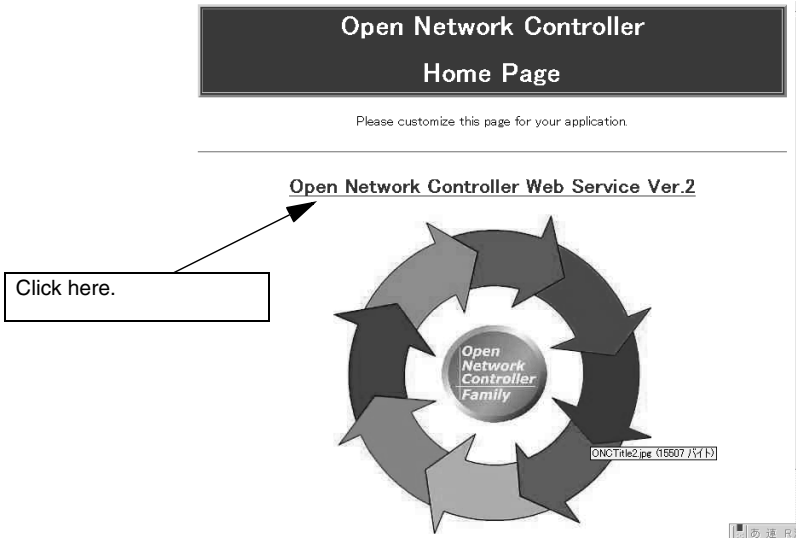

3. Click the ***Open Network Controller Web Service Ver. 2*** heading to display the following window.

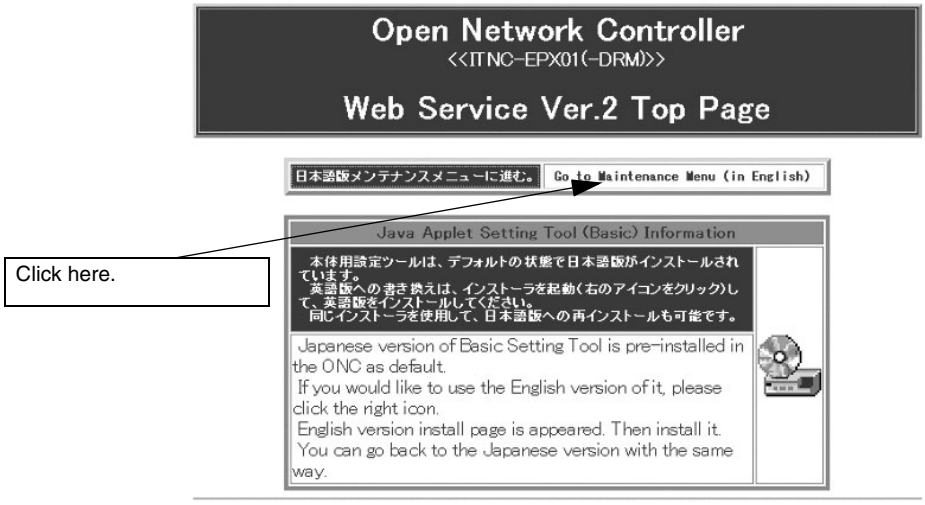

Note This window can also be displayed by inputting the Open Network Controller's IP address + /WebService.html and URL (e.g., http://10.0.0.1/WebService.html).

4. Select ***Go to Maintenance Menu (in English)***. The following Maintenance Menu Window will be displayed.

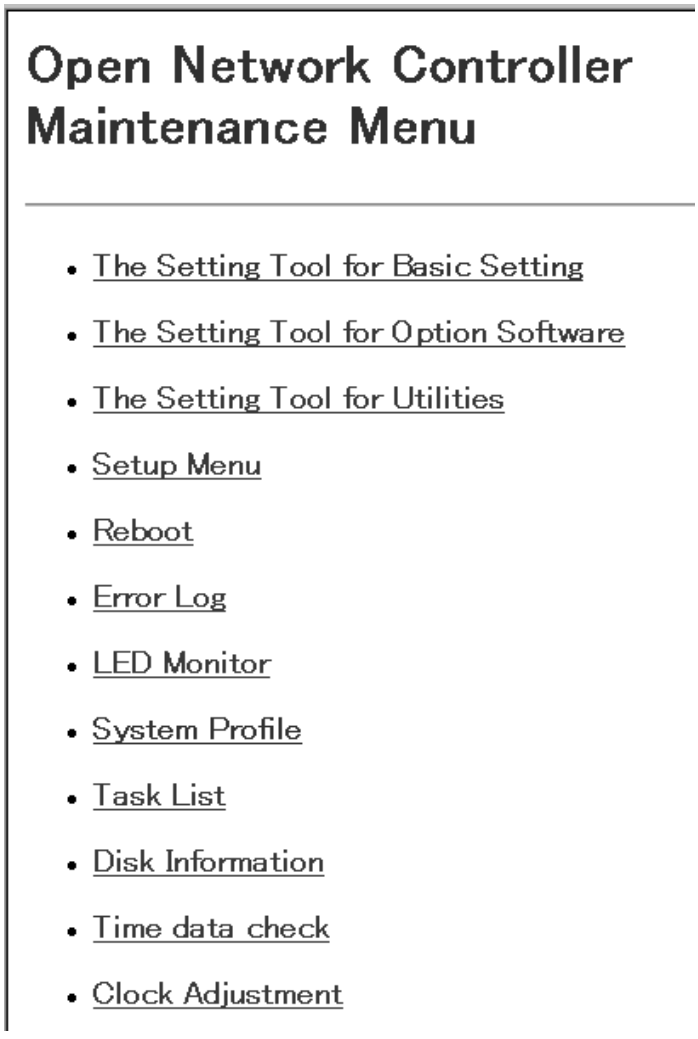

5. Select ***The Setting Tool for Basic Setting***. The following logon window will be displayed. Log on to the Basic Setting Tool, referring to the following *Login* section.

   Note For details on the other items in the menu apart from *The Setting Tool for Basic Setting*, refer to *SECTION 17 Web Service Version 2 Maintenance Menu*.

Log on

The method used to log on to the Basic Setting Tool installed in the Open Network Controller is explained here. When *The Setting Tool for Basic Setting* is selected from the previous menu, the following password entry window is displayed.

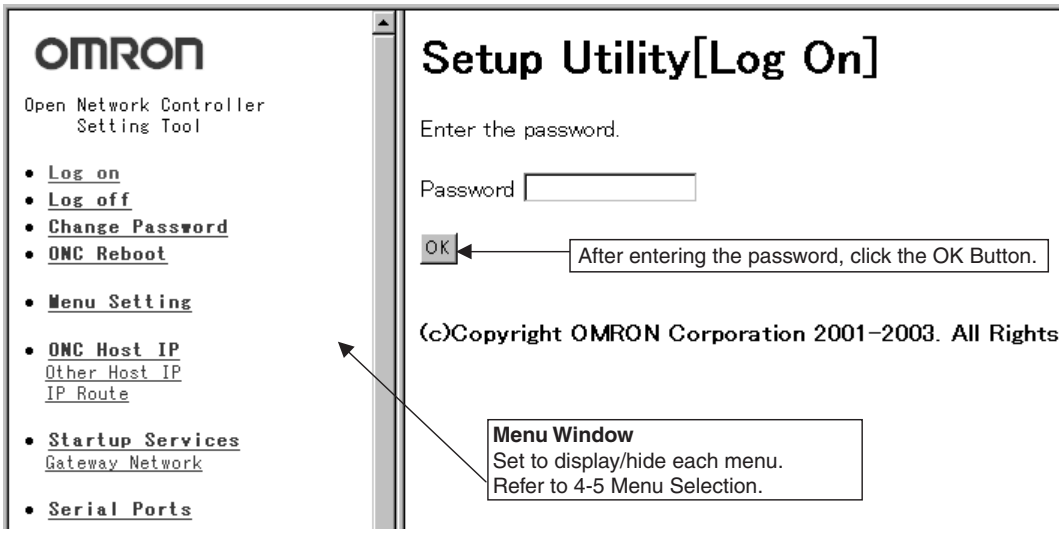

After entering the password, click the **OK** Button. The default password is set to OMRON. Refer to the following information under *Change Password* for details on changing the password. After the correct password is entered, the following message will be displayed.

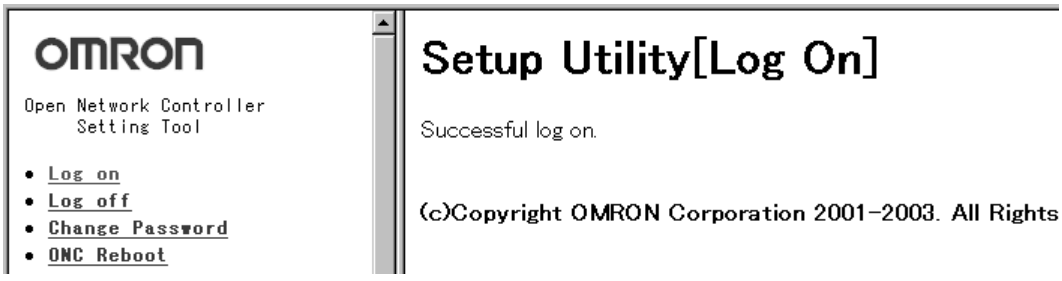

These operations can be used to select the items in the menu displayed on the left side of the screen and set each of the settings.

Note If the entered password is incorrect, a message will be displayed indicating that logon was unsuccessful. Select ***Log on*** from the Menu Window and enter the correct password in the password entry window that is displayed.

Log Off

Use the following procedure to log off the Setting Tool.

1,2,3...

1. Select ***Log off*** from the Menu Window on the left side of the screen. A log off confirmation window will be displayed.
2. Click the **OK** Button to log off the Setting tool. Setting is not possible until logged on again.

Change Password

Use the flowering method to change the password.

1,2,3...

1. Select ***Change Password*** from the Menu Window of the Basic Setting Tool installed on the Open Network Controller. The following window will be displayed.

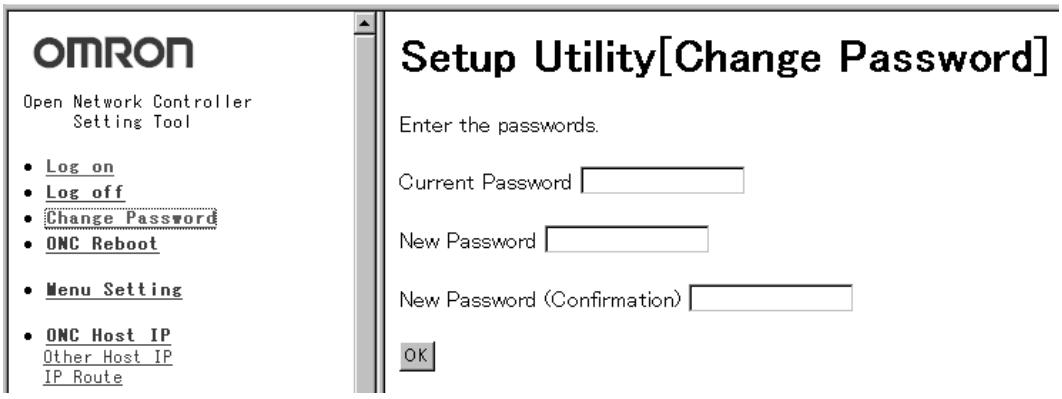

2. Enter the applicable passwords in the *Current Password*, *New Password*, and *New Password (Confirmation)* fields, and then click the **OK** Button. If the password has been changed correctly, the following message will be displayed.

Password changed.

The new password will be effective at the next log on.

4-3-4 ONC Reboot

The following method is used to reboot the Open Network Controller. After making the various Open Network Controller settings, the Open Network Controller must be rebooted to enable the settings.

1,2,3... 1. Select ***ONC Reboot*** from the Menu Window of the Basic Setting Tool installed on the Open Network Controller. The following window will be displayed.

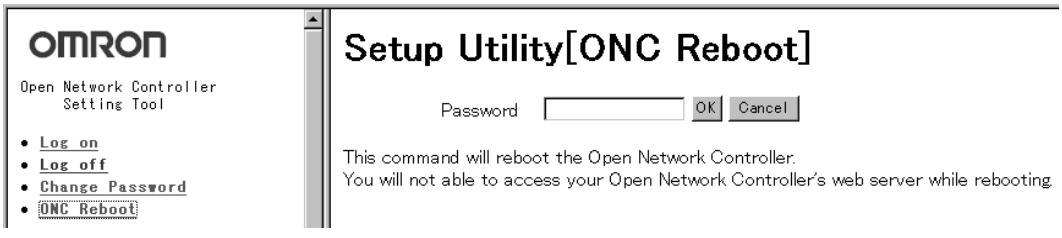

2. After entering the reboot password (default is 1234), click the **OK** Button. The following window will be displayed. For details on changing the reboot password, refer to *17-3 Reboot*.

Note After clicking the OK Button, do not access the Open Network Controller for about one to two minutes. The Open Network Controller can be accessed after it has started.

4-3-5 Common Operations

The basic methods for operating the setting windows are provided here. The operating methods for each window are almost the same. Therefore, the operating methods that are common to all setting windows are described here. In the explanations for each setting window, only special operations are referred to from *4-5 Menu Setting* onwards.

Operating and Saving Procedures

1,2,3...

1. Click the required menu item in the Menu Window. In this example, click ***HLK_UNIT***. The following setting window will be displayed showing the current settings.

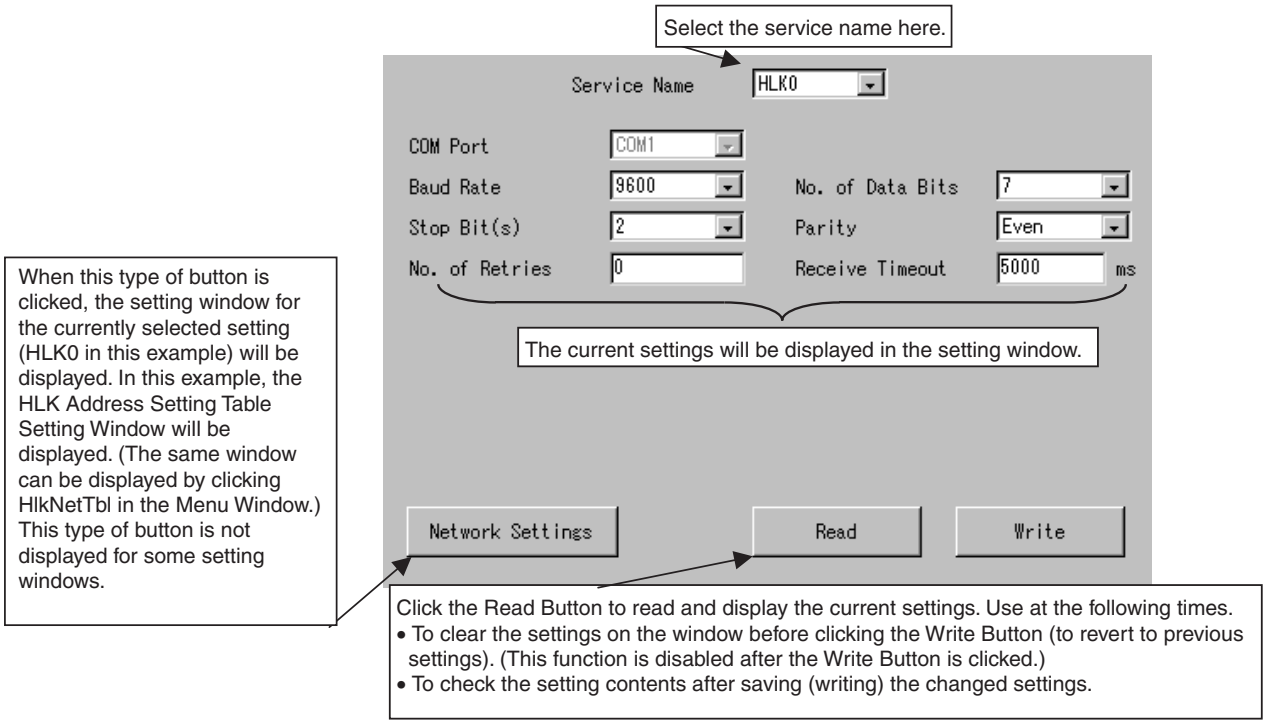

2. Set the required settings, and click the **Write** Button. The settings will be written to the Open Network Controller's setup files.

Note

1. After setting, always click either the **Create New**, **Modify**, or **Delete** Button. The settings will not be changed if the Write Button is clicked, without clicking the **Create New**, **Modify**, or **Delete** Buttons.
2. After setting, always click the **Write** Button. If the **Write** Button is not clicked, and another menu is accessed, the settings will not be changed.
3. The newly saved settings will be enabled and shown when the Open Network Controller is started again.

Setting List Format Setting Items

The setting methods for settings in list format are described here using the HLK Address Setting Table Setting Window as an example.

1,2,3...

1. Select ***HlkNetTbl*** in the Menu Window (or click the **Network Settings** Button in the previous setting example). The following setting window will be displayed showing the current settings.

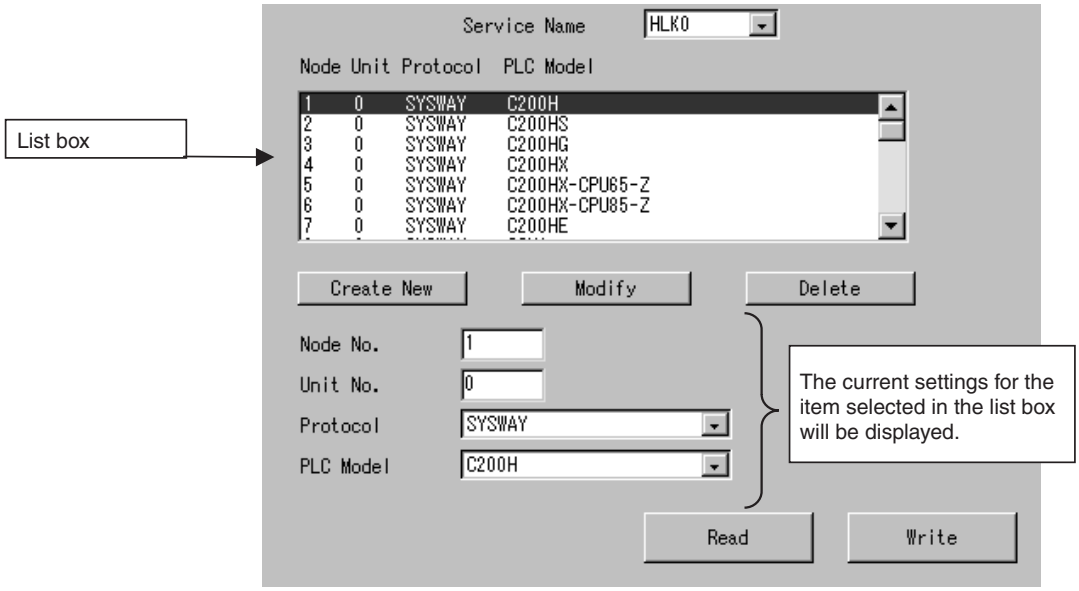

- Adding Settings
  After entering the settings in the fields under the list box, click the **Create New** Button.
- Changing Settings
  After selecting the items to be changed in the list box, click the **Modify** Button.
- Deleting Settings
  After selecting the items to be deleted in the list box, click the **Delete** Button.

2. After the applicable setting operation has been performed, click the **Write** Button. The setting details will be written to the Open Network Controller's setup files.

Note

1. After setting, always click either the **Create New**, **Modify**, or **Delete** Button. The settings will not be changed if the Write Button is clicked, without clicking the **Create New**, **Modify**, or **Delete** Buttons.
2. After setting, always click the **Write** Button. If the **Write** Button is not clicked, and another menu is accessed, the settings will not be changed.
3. The saved settings will be enabled when the Open Network Controller is started again.

Confirmation Dialog Boxes when Writing, Reading, and Jumping to Other Windows

■ **Saving (Writing)**

1,2,3...

1. Click the **Write** Button to display the following confirmation dialog box.

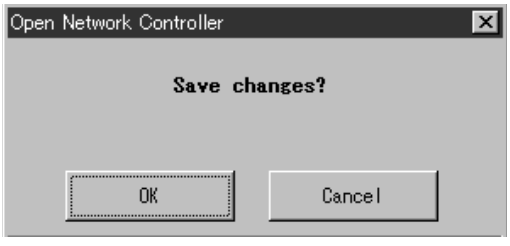

2. Click the **OK** Button to save the set data. Click the **Cancel** Button to return to the setting window without saving the setting changes.

■ **Reading and Jumping to Other Windows**

1,2,3... 1. After changing setting data, the following dialog box will be displayed when the **Read** Button or a button to jump to another window is clicked.

- The following example is for jumping to another window.

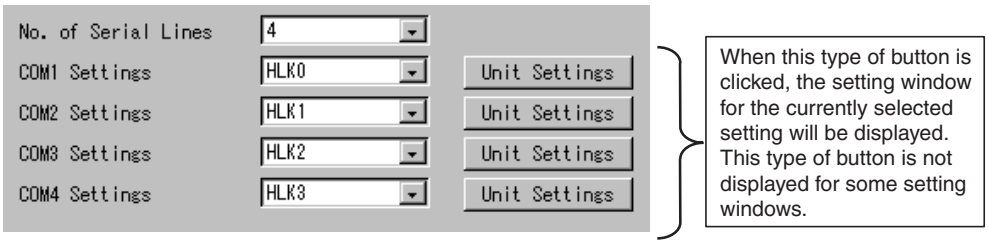

- The following confirmation dialog box will be displayed.

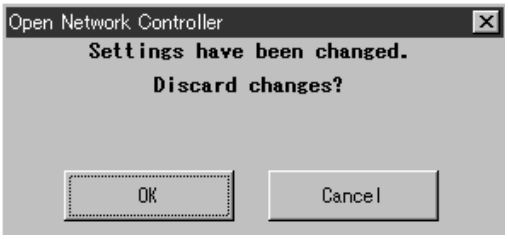

2. Click the **OK** Button to save the set data. Click the **Cancel** Button to return to the setting window without saving the setting changes.

4-4 Setting Menu List

The following table shows a list of the menus used to set the basic settings of the Open Network Controller.

Menu	Setting
Menu Setting	Display/hide each menu of the ONC Basic Setting Tool. (Refer to *4-5 Menu Setting*.)
ONC Host IP	Set the local host's host name, IP address, and Subnet Mask. (Refer to *4-6 Setting IP Addresses*.)
• Other Host IP	Set the host name and IP address of other hosts.
• IP Route	Set the IP routing (gateway to other networks) information.
Startup Services	Set the service names (Unit names) that start up using FinsGateway. (Refer to *4-7 Setting Startup Services*.)
• Gateway Network	Set the information on gateway networks that use FinsGateway.
Serial Ports	Set the services assigned to each COM port. (Refer to *4-8 Serial Port Settings*.)
ONC System NP	Access backup memory (SRAM) and battery status. (Refer to *SECTION 6 SPR_UNIT (ONC System Status Network Provider)*.)
ETN	Set the ETN_UNIT network number, node number, and unit number. (Refer to *SECTION 7 ETN_UNIT (Ethernet Network Provider)*.)
• IpTable	Set the network table used by ETN_UNIT (corresponding FINS node numbers and IP addresses of other nodes).
CLK	Set the CLK_UNIT network number, node number, and unit number. (Refer to *SECTION 8 CLK_UNIT (Controller Link Network Provider)*.)
• CLK UNIT	Set the CLK_UNIT network status area, data link status area, data link table area, baud rate, Board format, and refresh cycle.

Menu	Setting
SLK	Set the SLK_UNIT network number, node number, and unit number. (Refer to *SECTION 9 SLK_UNIT (SYSMAC LINK Network Provider)*.)
• SLK UNIT	Set the SLK_UNIT network status area, data link status area, data link table area, Board format, and refresh cycle.
BUSCS1	Set the BUSCS1_UNIT network number, node number, and unit number. (Refer to *SECTION 10 BUSCS1_UNIT (CS1 Bus Connection Network Provider)*.)
• BUSCS1 UNIT	Set the BUSCS1_UNIT unit information.
• BUSCS1 Mapping	Set the memory mapping information used by BUSCS1_UNIT.
DRM	Set the DRM_UNIT network number, node number, and unit number. (Refer to *SECTION 11 DRM_UNIT (DeviceNet Network Provider)*.)
• DRM UNIT	Set the DRM_UNIT unit information.
• DRM Mapping (Master)	Set the memory mapping used by DRM_UNIT (Master).
• DRM Mapping (Slave)	Set the memory mapping used by DRM_UNIT (Slave).
• ScanList File	Set the scan list (DeviceNet Slave allocation) used by DRM_UNIT.
HLK	Set the HLK_UNIT network number, node number, and unit number. (Refer to *SECTION 12 HLK_UNIT (Serial Network Provider)*.)
• HLK UNIT	Set the HLK□ communications conditions (node using SYSWAY, SYSWAY CV, or CompoWay/F protocol).
• HLK ID	Set the HLK□ communications conditions (node is an ID Controller).
• HLK TP	Set the HLK□ communications conditions (node is a Productivity Monitor).
• HlkNetTbl	Set the HLK address setting table (FINS node number, unit number, protocol).
Hsv	Set the Hsv□ unit number. (Refer to *SECTION 13 Hsv_UNIT (PT Connection Service Network Provider)*.)
• Hsv UNIT	Set the PLC model code returned to the PT from the ONC.
• RUT	Set the RUT□ network number, node number, unit number.
• RUT UNIT	Set the communications settings of the COM port that RUT□ is assigned to.
RCOM	Set the RCOM□ network number, node number, and unit number. (Refer to *SECTION 14 RCOM_UNIT (RemoteCOM Connection Network Provider)*.)
• RCOM UNIT	Set the RCOM□ communications conditions (node using SYSWAY, SYSWAY CV, or CompoWay/F protocol).
• RCOM ID	Set the RCOM□ communications conditions (node is an ID Controller).
• RCOM TP	Set the RCOM□ communications conditions (node is a Productivity Monitor).
• RCOMNetTbl	Set the RCOM address setting table (FINS node number, unit number, protocol).

Note

1. For details on FLK_UNIT (FinsLink), refer to *SECTION 16 Utilities.*
2. The methods for setting the Open Network Controller operating environment are explained in *SECTION 15 Setup Examples* using various network examples. Refer to these examples to understand the setting procedure.

4-5 Menu Setting

Use the following procedure to set whether to display or hide each of the menu items of the Open Network Controller's Basic Setting Tool. When the display/hide setting has been changed, save the setting, and then refresh the Web browser display.

1,2,3...

1. Select ***Menu Setting*** in the Menu Window. The following setting window will be displayed showing the current settings.

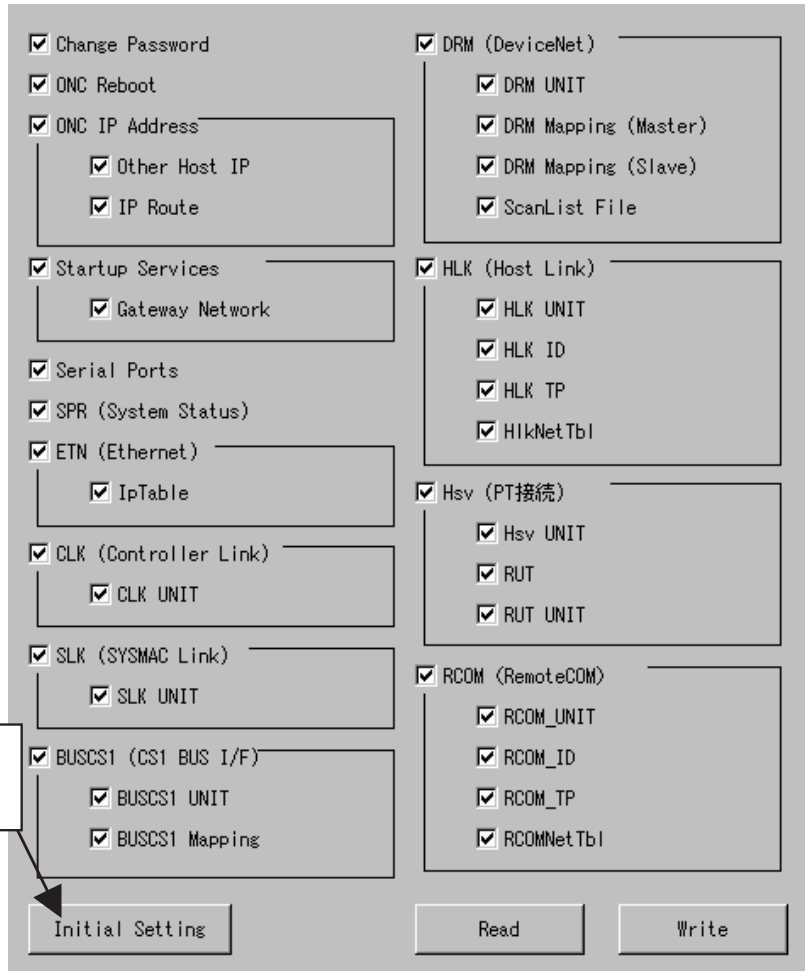

Click the **Initial Setting** Button to return all the menu display/hide settings to the default settings (all items displayed).

2. After setting is completed, click the **Write** Button. The following window will be displayed.

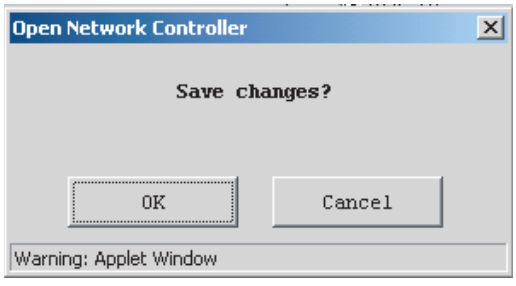

3. Click the **OK** Button.

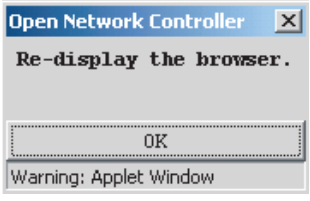

4. Click the **OK** Button.
5. If the menu display/hide settings have been changed, refresh the Web browser.

4-6 Setting IP Addresses

The local host, subnet mask, other host name, and routing settings must be set.

4-6-1 ONC IP Address

Use the ONC IP Address menu to set the local host name, IP address, and Subnet mask for the Open Network Controller.

Select ***IP Address*** in the Menu Window. The following setting window will be displayed showing the current settings.

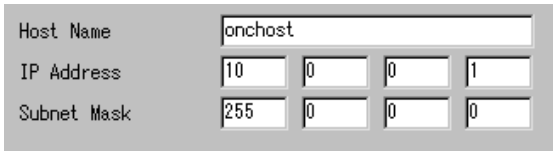

Settings

Item	Setting
Host Name	Set the Open Network Controller's host name.
IP Address	Set the IP address of the Open Network Controller.
Subnet Mask	Set the Subnet mask so that it matches the class of the Open Network Controller's IP address.

4-6-2 Other Host IP

Use the Other Host IP menu to set the IP address and host name of other personal computers, as required. This setting is not compulsory.

Select ***Other Host IP*** in the Menu Window. The following window will be displayed showing the current settings. The default setting is blank.

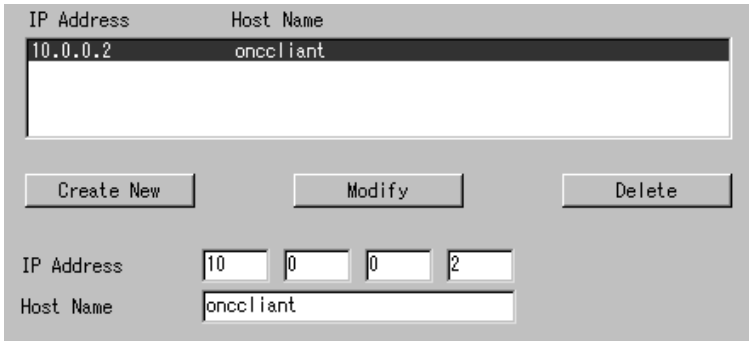

Settings

Item	Setting
IP Address	Set the IP address of the other computer.
Host Name	Set the host name of the other computer.

4-6-3 IP Route

Use the IP Route menu to set IP routing, as required. The destination network address and IP router address are set here. This setting is required to access a network different from the Open Network Controller. This setting is not required when IP routing is not used.

Select ***IP Route*** from the Menu Window. The following window will be displayed showing the current settings. The default setting is blank.

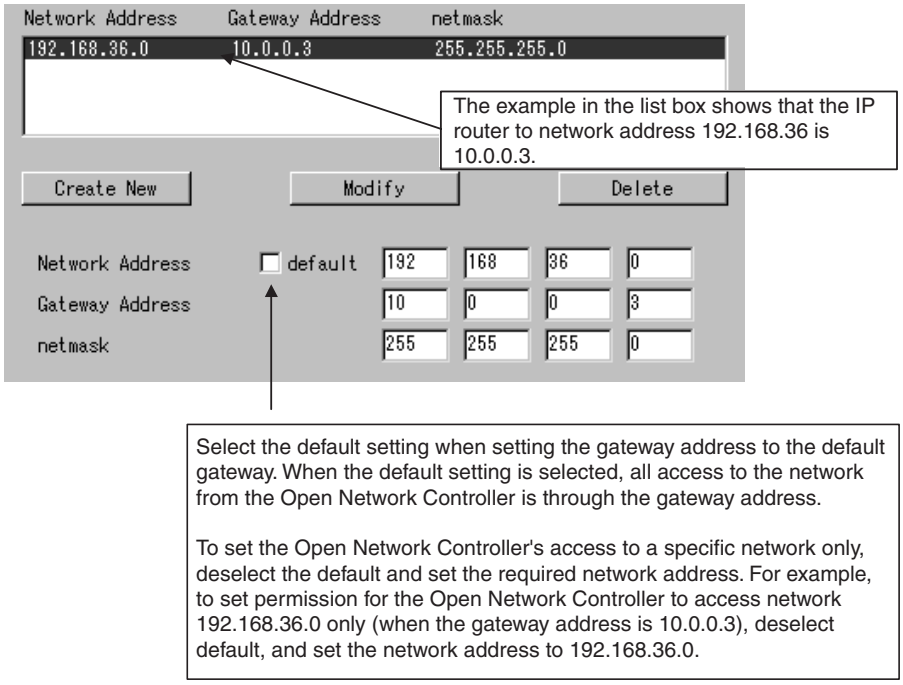

Note For routing examples, refer to *SECTION 15 Setup Examples*.

Settings

Item	Setting
Network Address	Set the destination network address.
Gateway Address	Set the IP address of the gateway to route through.
netmask	Set the Subnet mask used by the router.

4-7 Setting Startup Services

The service name (UNIT name) that the Open Network Controller uses at startup, and the gateway network information must be set. This setting is compulsory.

4-7-1 Startup Services

Use the following procedure to set the service name (UNIT name) that the Open Network Controller uses at startup.

Select ***Startup Services*** from the Menu Window. The following window will be displayed showing the current settings.

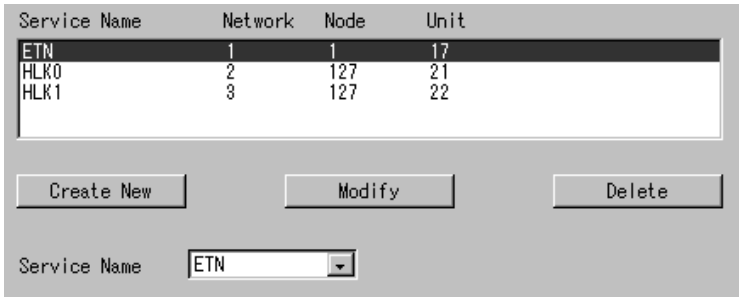

Settings

Item	Setting
Service Name	Set the service name (UNIT name) that will start up with Fins-Gateway. ETN: ETN_UNIT (Ethernet NP) SPR: SPR_UNIT (ONC System Status NP) DRM□: DRM_UNIT (DeviceNet NP) Clk0: CLK_UNIT (Controller Link network NP) Slk0: SLK_UNIT (SYSMAC LINK network NP) HLK□: HLK_UNIT (SYSWAY, SYSWAY-CV, CompoWay/F NP) RUT□: RUT_UNIT (PT connection service NP) Hsv□: Hsv_UNIT (PT connection service NP) BUSCS1: BUSCS1_UNIT (CS1 Bus Board NP) RCOM□: RCOM_UNIT (RemoteCOM connection service NP) FLK□: FLK_UNIT (FinsLink NP) Note 1: Refer to *1-3 Function Overview* for details on each service. Note 2: IpLibMgr, Sch, and Mua are used with optional software. Do not add when optional software is not used. For details, refer to the optional software manuals.

Setting Example

Select ***Slk0*** from the Service Name selection box, and click the **Create New** Button.

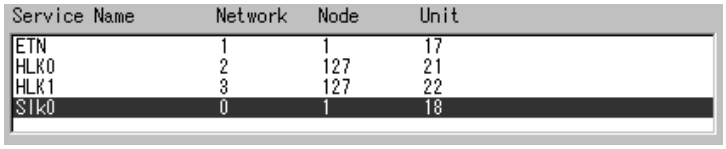

Service Name	Network	Node	Unit
ETN	1	1	17
HLK0	2	127	21
HLK1	3	127	22
Slk0	0	1	18

Note Slk0 is added in the default settings. When a new service is added, the network number is set to 0. Set the correct network number of the service using the Setting Tool. Some services (SPR, Hsv, and FLK) can be left with network number 0. For details on settings for each service, refer to *SECTION 6 SPR_UNIT (ONC System Status Network Provider)through SECTION 16 Utilities*.

4-7-2 Gateway Network

This menu is used to set the gateway network tables for the FINS network.

Select ***Gateway Network*** from the Menu Window. The following window will be displayed showing the current settings. The default setting is blank.
This setting is not required if FINS communications across other networks using are not used.

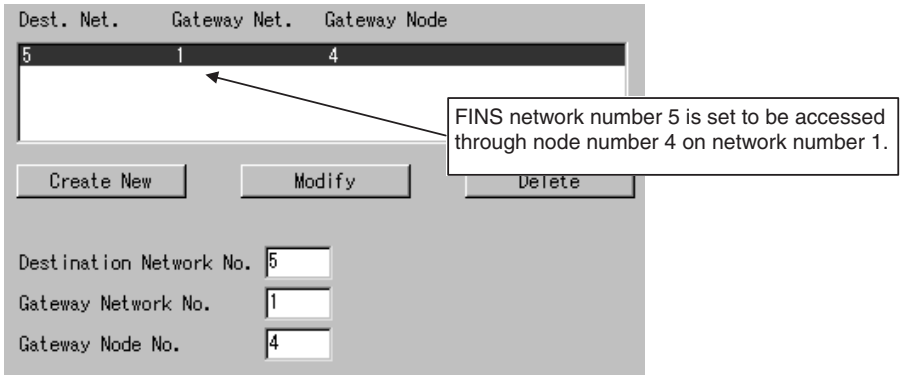

Settings

Item	Setting
Destination Network No.	Set the number of the destination network (network of the destination node).
Gateway Network No.	Set the number of the relay network (network to be routed through).
Gateway Node No.	Set the number of the relay node (node to be routed through).

4-8 Serial Port Settings

Set the number of the COM port allocated to each service in the Serial Port Settings. Making these settings will prevent more than one service starting from the same port.
In the default settings, as shown in the following window, COM1 is allocated to HLK0, COM2 is allocated to HLK1, COM3 is allocated to HLK2, and COM4 is allocated to HLK3.

Select ***Serial Ports*** from the Menu Window. The following setting window will be displayed showing the current settings.

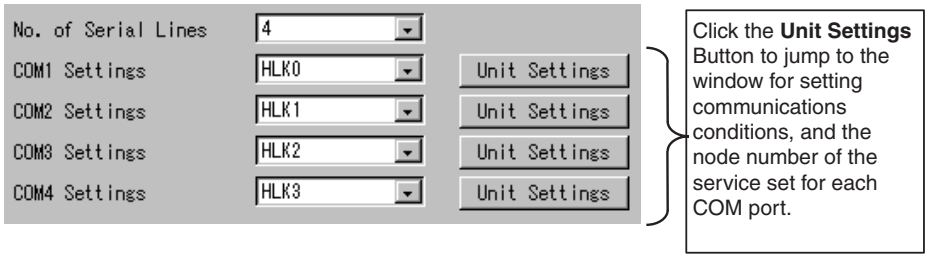

Setting Details

Item	Details
No. of Serial Lines	Sets the number of COM ports being used.
COM1 Settings	Sets the service allocated in the COM1 port.
COM2 Settings	Sets the service allocated in the COM2 port.
COM3 Settings	Sets the service allocated in the COM3 port.
COM4 Settings	Sets the service allocated in the COM4 port.

SECTION 5
CPU_UNIT

This section individually describes the FINS commands and responses for CPU_UNIT and the network providers (NPs). Refer to the *FINS Commands Reference Manual* (W227) for further information on FINS commands.

5-1 Overview of CPU_UNIT Functions 100
5-2 FINS Commands Addressed to CPU_UNIT 101
5-2-1 MEMORY AREA READ: 01 01 101
5-2-2 MEMORY AREA WRITE: 01 02 102
5-2-3 MULTIPLE MEMORY AREA READ: 01 04. 103
5-2-4 PARAMETER AREA READ: 02 01 104
5-2-5 PARAMETER AREA WRITE: 02 02 105
5-2-6 PARAMETER AREA CLEAR: 02 03. 106
5-2-7 ROUTING TABLE SET: 02 25 107
5-2-8 CONTROLLER DATA READ: 05 01 107
5-2-9 CONNECTION DATA READ: 05 02 108
5-2-10 CLOCK READ: 07 01 108
5-2-11 CLOCK WRITE: 07 02 109
5-2-12 TIME COMPENSATION (Unit Version 1.1 or Later): 07 03 110
5-2-13 LOOPBACK TEST: 08 01 112

5-1 Overview of CPU_UNIT Functions

CPU_UNIT is a software component that emulates the FINS message functions of the CPU Unit in a PLC, but cannot run ladder programs. The event memory (i.e., the variable memory in the Open Network Controller) can be read and written from personal computers and other devices on the networks.

FINS Commands Addressed to CPU_UNIT

The following FINS commands can be addressed to CPU_UNIT.

Command code	Name and function
01 01	MEMORY AREA READ: Reads event memory
01 02	MEMORY AREA WRITE: Writes event memory
01 04	MULTIPLE MEMORY AREA READ: Reads multiple areas in event memory.
02 01	PARAMETER AREA READ: Reads the routing tables
02 02	PARAMETER AREA WRITE: Writes the routing tables
02 03	PARAMETER AREA CLEAR: Clears the routing tables
02 25	ROUTING TABLE SET
05 01	CONTROLLER DATA READ
05 02	CONNECTION DATA READ
07 01	CLOCK READ
07 02	CLOCK WRITE
07 03	TIME COMPENSATION (unit version 1.1 or later)
08 01	INTERNODE ECHO TEST

Note FINS commands addressed to CPU_UNIT must be sent through an NP.

Refer to *5-2 FINS Commands Addressed to CPU_UNIT* for details on FINS commands that can be addressed to CPU_UNIT.

Event Memory

Event memory is the internal memory for FinsGateway. It contains memory with the same names (DM and CIO) as a PLC's memory areas. Just like the CIO and DM areas in a PLC, the event memory can be allocated to DeviceNet slave I/O data, Controller Link or SYSMAC LINK data links, or for other purposes. In addition, CS1 CPU Unit I/O can be allocated via the CS1 bus interface. Event memory can be accessed by using FINS commands. An example is given below. The size of the event memory is 65,536 words for DM and 8,192 words for CIO.

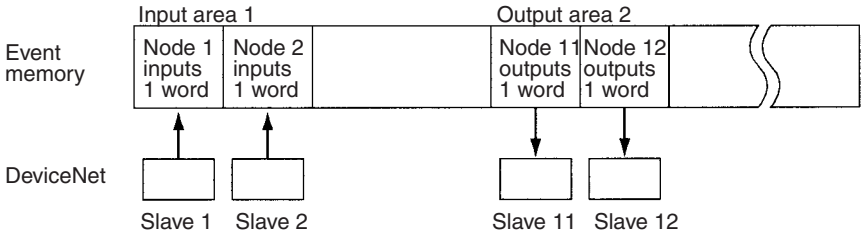

It would be possible to read or write the I/O data for more than one DeviceNet slave using a single FINS command

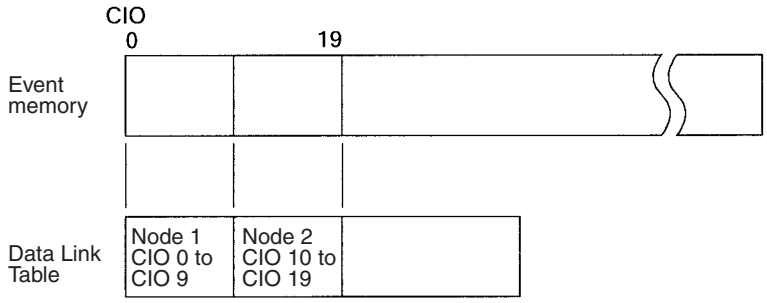

Data link words are allocated in event memory according to settings for the data link tables. CX-Net is used to set the Data Link Tables.

5-2 FINS Commands Addressed to CPU_UNIT

This section describes the FINS commands that can be addressed to CPU_UNIT.

CPU_UNIT performs the FINS message communications functions of a CPU Unit for a PLC. In particular, it provides the access functions required by personal computers and other devices on an Ethernet network to read and write event memory in the Open Network Controller.

The unit address of CPU_UNIT is 0. When accessing the CPU_UNIT at a specific node on a network using FINS message communications, specify 0 as the unit address in the destination FINS addresses.

5-2-1 MEMORY AREA READ: 01 01

Reads the contents of the specified number of consecutive words starting from the specified word in event memory.

Command Format

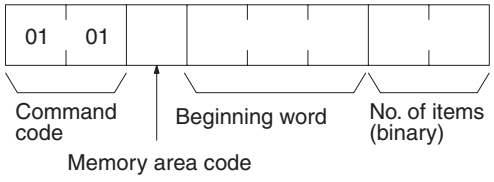

Response Format

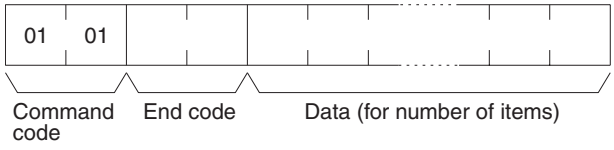

Parameters

Memory area code, beginning word, number of items (command)

Specify the type of data to be read, the beginning word of the data to be read, and the number of items of data to be read.

The memory areas that can be read are given in the following table. Refer to *Memory Area Designations* later in this section for the specific addresses that can be used.

Area	Data type	Memory area code (hex)	Bytes per item
CIO area	Bit ON/OFF status	00	1
	Word contents	80	2
DM area	Bit ON/OFF status	02	1
	Word contents	82	2

Data (response)

The data from the specified memory area is returned in sequence starting from the beginning word. The required number of bytes in total is calculated as follows: Number of bytes required by each item x number of items

For details regarding data configuration, refer to *Memory Area Designations* later in this section.

End code (response)

Refer to *19-1 Troubleshooting with FINS End Codes* for information on end codes.

Memory Area Designations

The memory area codes given in the following table are used to specify addresses to access in the event memory using FINS commands. “Bytes per item” indicates the number of bytes required in the FINS command or response for each item being accessed.

Area	Data type	Access length	Memory area code (hex)	Bytes per item
CIO area	General purpose	Bits	00	1
		Words	80	2
DM area	General purpose	Bits	02	1
		Words	82	2

Memory area addresses are designated in three bytes. The first and second byte are the word address and the third byte is the bit position when accessing bits.

When accessing bits, a maximum of 16 bits (i.e., items) can be accessed and they must all be in the same word.

When accessing words, specify 00 as the bit position (i.e., as the third byte).

5-2-2 MEMORY AREA WRITE: 01 02

Writes data to the specified number of consecutive words starting from the specified word.

Command Format

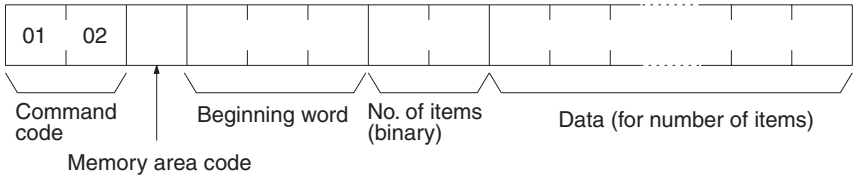

Response Format

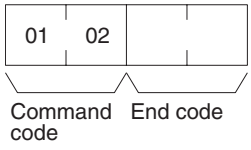

Parameters

Memory area code, beginning word, number of items (command)

Specify the type of data to be written, the beginning word of the data to be written, and the number of items of data to be written.

The memory areas that can be read are given in the following table. Refer to *Memory Area Designations* under *5-2-1 MEMORY AREA READ: 01 01* for the specific addresses that can be used.

Area	Data type	Memory area code (hex)	Bytes per item
CIO area	Bit ON/OFF status	00	1
	Word contents	80	2
DM area	Bit ON/OFF status	02	1
	Word contents	82	2

Data (command)

The data to be written to the specified memory area is provided in sequence starting from the beginning word. The required number of bytes in total is calculated as follows:

Number of bytes required by each item x number of items

For details regarding data configuration, refer to *Memory Area Designations* under *5-2-1 MEMORY AREA READ: 01 01*.

End code (response)

Refer to *19-1 Troubleshooting with FINS End Codes* for information on end codes.

Precautions

When writing bit ON/OFF status, a maximum of 16 bits (i.e., items) can be written in one command and they must all be in the same word.

5-2-3 MULTIPLE MEMORY AREA READ: 01 04

Reads data from non-consecutive words in the event memory (variable memory) of the Open Network Controller.

Command Format

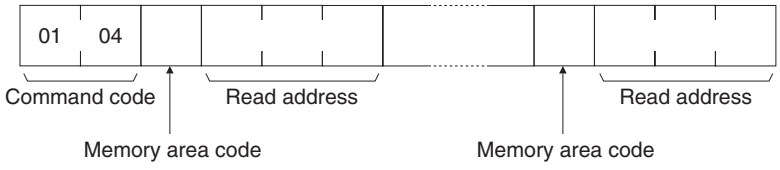

Response Format

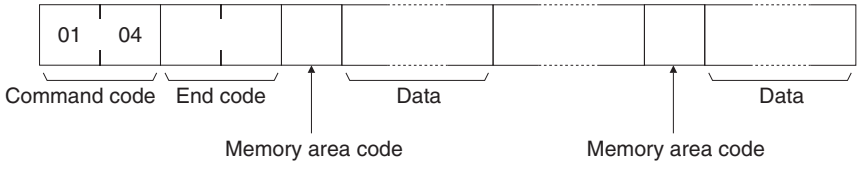

Parameters

Memory area code, read address (command)

Specify the type of data to be read and the addresses of the data to be read.

The memory areas that can be read are given in the following table. Refer to *Memory Area Designations* under *5-2-1 MEMORY AREA READ: 01 01* for the specific addresses that can be used.

Area	Data type	Memory area code (hex)	Bytes per item
CIO area	Bit ON/OFF status	00	1
	Word contents	80	2

Area	Data type	Memory area code (hex)	Bytes per item
DM area	Bit ON/OFF status	02	1
	Word contents	82	2

Memory area code, data (response)

The data from the specified memory areas is returned in the same order that the areas are specified in the command. The required number of bytes in total is calculated as follows: Number of bytes required by each item x number of read items.

For details regarding data configuration, refer to *Memory Area Designations* under *5-2-1 MEMORY AREA READ: 01 01*.

End code (response)

Refer to *19-1 Troubleshooting with FINS End Codes* for information on end codes.

Precautions

If an error is present in the command's memory area code or read address, the event memory cannot be read.

5-2-4 PARAMETER AREA READ: 02 01

Reads the contents of the routing tables.

Command Format

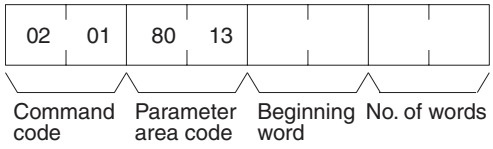

Response Format

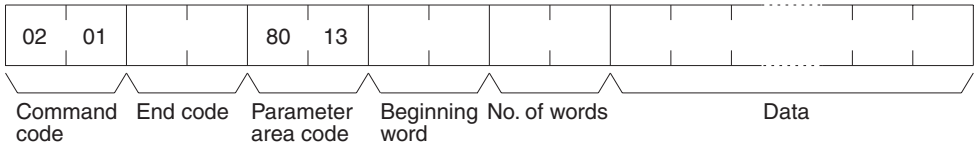

Parameters

Parameter area code (command and response)

Specify the routing table area as the parameter area. The parameter area code is always 8013.

Beginning word (command and response)

Specify the first word to read. The beginning word address specifies the relative word address, with the beginning of the routing table as 0000 (hex). The following addresses can be used.

0000: Beginning of routing tables
0000: Beginning of local network table
0011: Beginning of relay network table

Number of words (command and response)

Bits 0 to 14 are used to specify the number of words to be read. (Each word consists of 16 bits.) Bit 15 must be OFF (0) in the command format. When the content in the response format contains the last word of data in the specified parameter area, bit 15 will be ON (1).

The number of words data will be as follows when reading the routing tables:

Reading all the routing tables: 30 Hex (96 bytes)
Reading all of the local network table: 11 Hex (34 bytes)
Reading all of the relay network table: 1F Hex (62 bytes)

Data (response)

The specified data will be returned in sequence starting from the beginning word. The leftmost bits (bits 8 to 15) of each word are read first, followed by the rightmost bits (bits 0 to 7). The required number of bytes in total for each read is calculated as follows:

Number of words x 2 (each word consists of 2 bytes, or 16 bits)

End code (response)

Refer to *19-1 Troubleshooting with FINS End Codes* for information on end codes.

5-2-5 PARAMETER AREA WRITE: 02 02

Writes data to the specified number of consecutive routing table area words starting from the specified word. To use the new routing tables, execute ROUTING TABLE SET (02 25) after executing this command.

Command Format

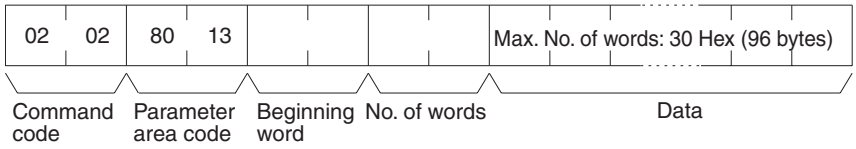

Response Format

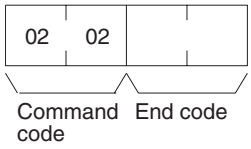

Parameters

Parameter area code (command)

Specify the routing table area as the parameter area. The parameter area code is always 8013.

Beginning word (command)

Specify the first word to write. The beginning word address specifies the relative word address, with the beginning of the routing table as 0000 (hex). The following addresses can be used.

0000: Beginning of routing tables
0000: Beginning of local network table
0011: Beginning of relay network table

Number of words (command and response)

Bits 0 to 14 are used to specify the number of words to be written. (Each word consists of 16 bits.) Bit 15 must be OFF (0) in the command format. When the content in the response format contains the last word of data in the specified parameter area, bit 15 will be ON (1).

The number of words data will be as follows when writing the routing tables:

Writing all the routing tables: 30 Hex (96 bytes)
Writing all of the local network table: 11 Hex (34 bytes)
Writing all of the relay network table: 1F Hex (62 bytes)

Data (command)

Specify the data to be written. The leftmost bits (bits 15 to 8) of each word must be specified first, followed by the rightmost bits (bits 7 to 0). The required number of bytes in total for each write can be calculated as follows:

No. of words x 2 (each word consists of 2 bytes, or 16 bits)

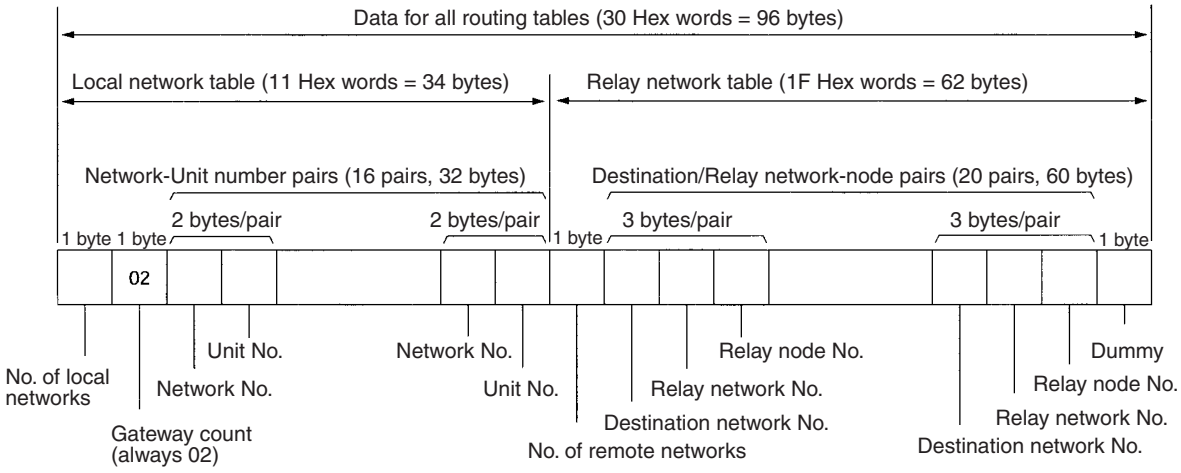

Parameters

End code (response)

Refer to *19-1 Troubleshooting with FINS End Codes* for information on end codes.

5-2-6 PARAMETER AREA CLEAR: 02 03

Writes all zeros to the routing table area to clear the previous routing tables.

Command Format

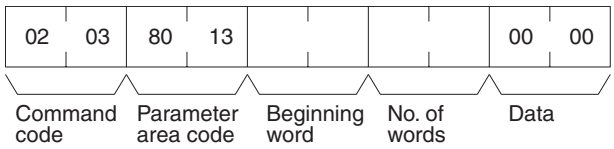

Response Format

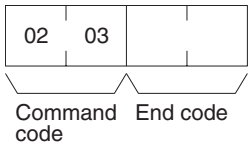

Parameters

Parameter area code (command)

Specify the routing table area as the parameter area. The parameter area code is always 8013.

Beginning word and Number of words (command)

Use the following settings.

Tables	Beginning word	Number of words
All routing tables	0000	0030 (96 bytes)
Local network table	0000	0011 (34 bytes)
Relay network table	0011	001F (62 bytes)

Note All of the routing tables will be cleared if FFFF is specified as the number of words.

Data (command)

Set to 0000. The number of words to be cleared is specified by the number of words in the command format. This parameter requires only two bytes (one word) of data.

End code (response)

Refer to *19-1 Troubleshooting with FINS End Codes* for information on end codes.

5-2-7 ROUTING TABLE SET: 02 25

Sets the routing tables in the Open Network Controller. This command must be executed to enable the routing tables set with the ROUTING TABLE WRITE command (02 02). If ROUTING TABLE SET ends normally, the routing tables will be written to /etc/FgwQnx/FgwQnx.ini.

Command Format

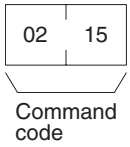

Response Format

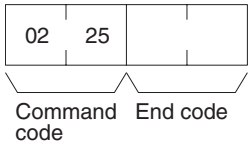

Parameters

End code (response)

Refer to *19-1 Troubleshooting with FINS End Codes* for information on end codes.

5-2-8 CONTROLLER DATA READ: 05 01

Reads the following data from the Open Network Controller.

- The model of CPU_UNIT that is running.
- The version of CPU_UNIT that is running.

Command Format

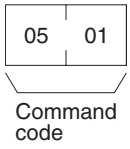

Response Format

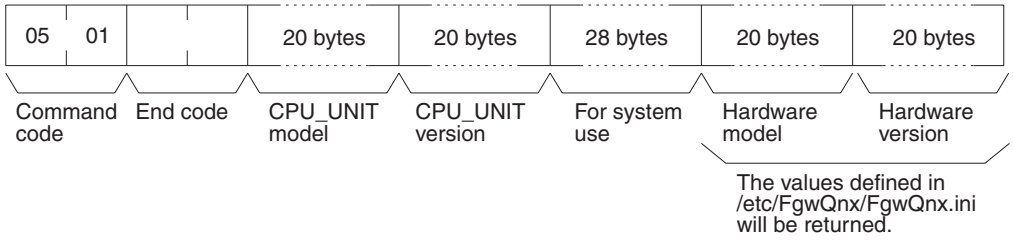

Parameters

CPU Unit model and version (response)

Each is returned in not more than 20 bytes in ASCII (i.e., 20 ASCII characters). If the model or version requires less than 20 characters, spaces will be inserted to fill the remainder.

End code (response)

Refer to *19-1 Troubleshooting with FINS End Codes* for information on end codes.

5-2-9 CONNECTION DATA READ: 05 02

Reads the model numbers (names) of Units (NPs) corresponding of the specified unit addresses.

Command Format

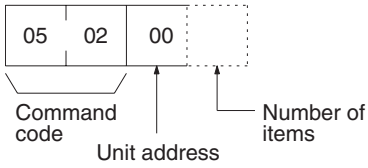

Response Format

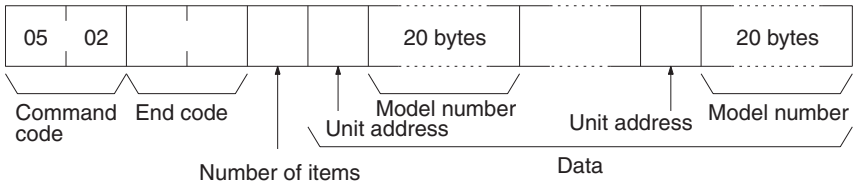

Parameters

Unit address (command)

Specify the first unit address for which information is to be read. Always specify 00 as the unit address.

Number of items (command)

Specify the number of items to be read. The number of items will be returned in order for the number specified, beginning with the unit address set in the "unit address" parameter. If the number of items is not specified, information will be read for all unit addresses.

Number of items (response)

The number of unit addresses (applications) for which the connection data is being returned. If bit 7 is ON (1), it means that the data for the last unit address is being returned.

Unit address and model number (response)

The unit address and model number (name) of the NP. The name is provided in up to 20 ASCII characters. Data will be returned for the specified number of items.

End code (response)

Refer to *19-1 Troubleshooting with FINS End Codes* for information on end codes.

5-2-10 CLOCK READ: 07 01

Reads clock information.

Command Format

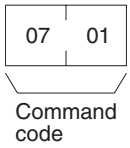

Response Format

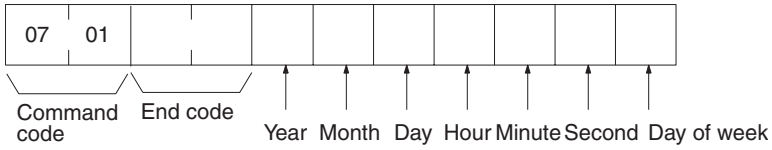

Parameters

Year, month, day, hour, minute, second, day of week (response)

The year, month, day of month, hour, minute, and second are expressed in BCD.

Year: The rightmost two digits of the year. (Any value under 70 will be after the year 2000.)

Hour: 00 to 23 (BCD).

Day of week: As follows:

Value (Hex)	00	01	02	03	04	05	06
Day of week	Sun	Mon	Tues	Wed	Thur	Fri	Sat

End code (response)

Refer to *19-1 Troubleshooting with FINS End Codes* for information on end codes.

5-2-11 CLOCK WRITE: 07 02

Writes data to the specified number of consecutive words starting from the specified word.

Command Format

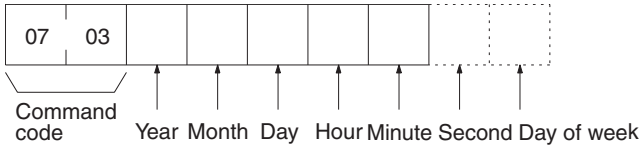

Response Format

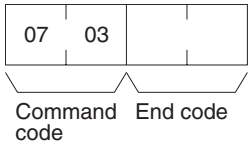

Parameters

Item	Setting method
Year	Specify the last two digits of the year in BCD. Values less than 70 will be after the year 2000.
Month	Specify in BCD.
Day of month	Specify in BCD.
Hour	Specify in BCD between 00 and 23.
Minutes	Specify in BCD.
Seconds	Optional. Specify in BCD. To omit, specify 00.
Day of week	Optional. A value can be specified. The day of the week, however, is calculated based on the year/month/day settings and any setting is ignored.

End code (response)

Refer to *19-1 Troubleshooting with FINS End Codes* for information on end codes.

Precautions

This command immediately updates the time to the specified time data.

For unit version 1.1 or later, OS tick interrupts are prohibited when the time data is written. Caution is thus required when running an application requiring realtime performance.

The continuity of time data may be lost before and after writing time data, depending on the time data settings. Problems may occur when running applications that must be executed periodically at specific intervals. Use the TIME COMPENSATION command (07 03) in such cases.

5-2-12 TIME COMPENSATION (Unit Version 1.1 or Later): 07 03

Compensates time data gradually.

Command Format

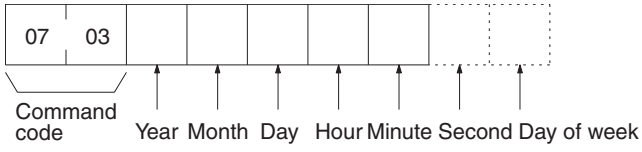

Response Format

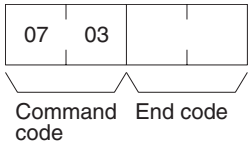

Parameters

Item	Setting method
Year	Specify the last two digits of the year in BCD. Values less than 70 will be after the year 2000.
Month	Specify in BCD.
Day of month	Specify in BCD.
Hour	Specify in BCD between 00 and 23.
Minutes	Specify in BCD.
Seconds	Optional. Specify in BCD. To omit, specify 00.
Day of week	Optional. A value can be specified. The day of the week, however, is calculated based on the year/month/day settings and any setting is ignored.

End code (response)

Refer to *19-1 Troubleshooting with FINS End Codes* for information on end codes.

Precautions

Unlike the CLOCK WRITE command (07 02), the TIME COMPENSATION command does not immediately update the time to the specified time data, but compensates the time data gradually during the intervals between OS tick interrupts so that the time data gradually approaches the actual time.

If you specify in the command parameters a time that is ahead of the present clock data (called positive compensation), the intervals between ticks will become shorter. Conversely, if you specify a time that is behind the present clock data (called negative compensation), the intervals between ticks become longer. This command can thus be used to speed up or slow down the time data until compensation has been completed, at which time the time data will be the same as the actual time.

Gradually compensating the time data to approach the actual time requires a certain amount of time before the compensation processing is completed. A rough estimate of the time until the completion of compensation can be obtained using the following method.

1. Execute the CLOCK READ command (07 01) to confirm the present clock data, and then determine the difference between the actual time and the clock data.

2. The time until the completion of compensation will be approximately 10 times the difference.

For example, assume the present clock data is 10:05:05 and the actual time is 10:07:00. A positive compensation of 2 minutes is required; therefore, compensation completion will require approximately 20 minutes.

The tick interval will be faster for approximately 20 minutes from execution of the 0703 command, speeding up refreshing of the clock data. As a result, the time data equal the actual time of 10:27:00 after 20 minutes has passed, and the tick interval will return to normal.

The TIME COMPENSATION command (07 03) cannot be executed again before completion of time compensation. If execution of the TIME COMPENSATION command (07 03) command is attempted during time compensation, an end code of 26 05 (service executing) will be returned.

The maximum time compensation possible is 30 minutes. If a value for a time difference exceeding 30 minutes is specified in the parameters, an end code of 11 04 (exceeds permissible range) will be returned.

5-2-13 LOOPBACK TEST: 08 01

Executes a loopback test with CPU_UNIT.

Command Format

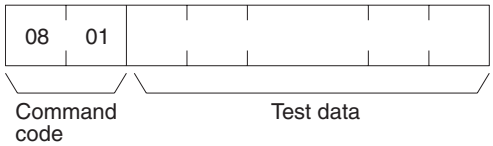

Response Format

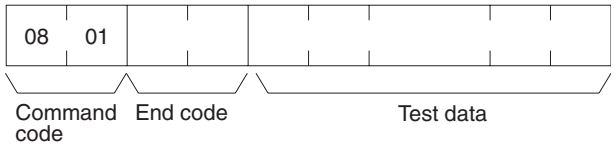

Parameters

Test data (command and response)

In the command block, designate the data to be transmitted to CPU_UNIT. In the response block, the test data from the command block will be returned as it is. If the test data in the response block is different from that in the command block, an error has occurred.

SECTION 6
SPR_UNIT (ONC System Status Network Provider)

This section describes the SPR_UNIT ONC system status network provider (NP).

6-1 Overview 114
6-2 SPR_UNIT (ONC System Status NP) Settings 115
6-2-1 Setting Startup Services 115
6-2-2 SPR (System Status) 115
6-2-3 Status Map 116
6-2-4 List Map 117
6-3 FINS Commands Addressed to SPR_UNIT 118
6-3-1 Overview 118
6-3-2 BACKUP MEMORY AREA READ: 01 01 118
6-3-3 BACKUP MEMORY AREA WRITE: 01 02 119
6-3-4 ERROR LOG READ: 21 02 120
6-3-5 ERROR LOG CLEAR: 21 03 122

6-1 Overview

SPR_UNIT is a software component that is used to access the backup memory (SRAM), and manage the battery. The functions of SPR_UNIT are listed below.

Memory Unit

The SPR_UNIT is able to hold the event memory (DM and CIO) status in SRAM even when the Open Network Controller power is turned OFF. The DM and CIO are not held, but, rather, the status of event memory (DM and CIO) specified over a specific period is held in the SRAM. This SRAM is called backup memory. SRAM cannot be accessed directly from the Open Network Controller application software. To access SRAM, send a FINS command to the SPR_UNIT.

- Backup
  The event memory (DM and CIO) of a specified area can be backed up to the backup memory (SRAM) periodically using refresh intervals (cycles) set with the Setting Tool. The backup memory (SRAM) capacity is 65,214 words. In the default settings, however, nine words are assigned as a Status Area, leaving 65,205 words available as backup memory.
- Restore
  The backup memory (SRAM) is copied to the event memory (DM and CIO). (Specify whether to execute at startup of the Open Network Controller, or at a user-specified time.) The backup or restore operation can also be performed when the status map bits are ON. (Refer to *6-2-4 List Map*.)

Status Memory

The status memory is used to periodically write the following statuses to the specified area in event memory (DM and CIO), or the backup memory (SRAM) at the intervals specified with the Setting Tool.

1. Indicator ON/OFF status (RUN, ERR, CARD)
2. DIP switch ON/OFF status (pin 1, pin 2)
3. Battery ON/OFF (normal, error)

Clock Memory

The clock memory is used to write the current date and time of the Open Network Controller in the event memory (DM and CIO), or the backup memory (SRAM) at the refresh interval specified with the Setting Tool.

Shutdown

The shutdown is used to restart the Open Network Controller when the event memory words specified with the Setting Tool turn ON (changes from 0 to 1).

Error Log

The error information displayed with the 7-segment display is saved in the SRAM. (Up to 64 errors.) FINS commands are used to read the error log. Past errors are saved even if the Open Network Controller power is OFF. When the number of errors exceeds 64, the old error information will be overwritten by the new error information.

FINS Service

Data from the backup memory (SRAM) is read or written using FINS commands. The following FINS commands are supported.

Command code	Name
01 01	BACKUP MEMORY READ
01 02	BACKUP MEMORY WRITE
21 02	ERROR LOG READ
21 03	ERROR LOG CLEAR

Note If the data in the SRAM is destroyed due to backup battery failure, an error (PR0105 (Sram Data Error)) will be output indicating that the SRAM cannot be used. FinsGateway may also not start if the backup battery fails.

Use the following procedure to initialize the SRAM.

1,2,3...

1. Use telnet to log on to the Open Network Controller.
2. Enter the following command: #SramInit
3. Restart the Open Network Controller.

6-2 SPR_UNIT (ONC System Status NP) Settings

6-2-1 Setting Startup Services

The SPR_UNIT service must be registered.

1,2,3...

1. Select ***Startup Services*** from the Menu Window. The Startup Services Setting Window will be displayed showing the current settings.
2. Select ***SPR*** in the Service Name Box and then click the **Create New** Button.

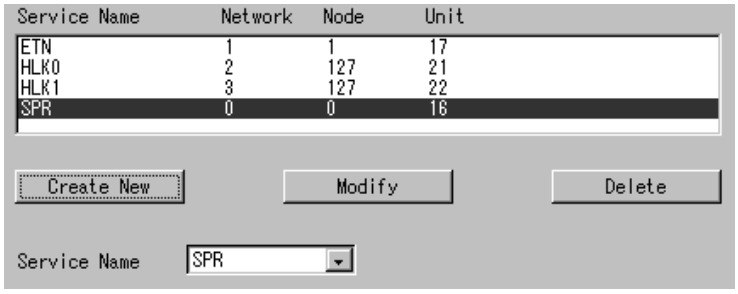

3. Click the **Write** Button.

6-2-2 SPR (System Status)

Use the following procedure to set the SPR_UNIT's refresh interval, System Status Mapping Area, and startup restore (individual restore) settings. The System Status Display Window (Status Map) and List Map Window can be accessed from this window.

Select ***SPR (System Status)*** from the Menu Window. The following setting window will be displayed showing the current settings.

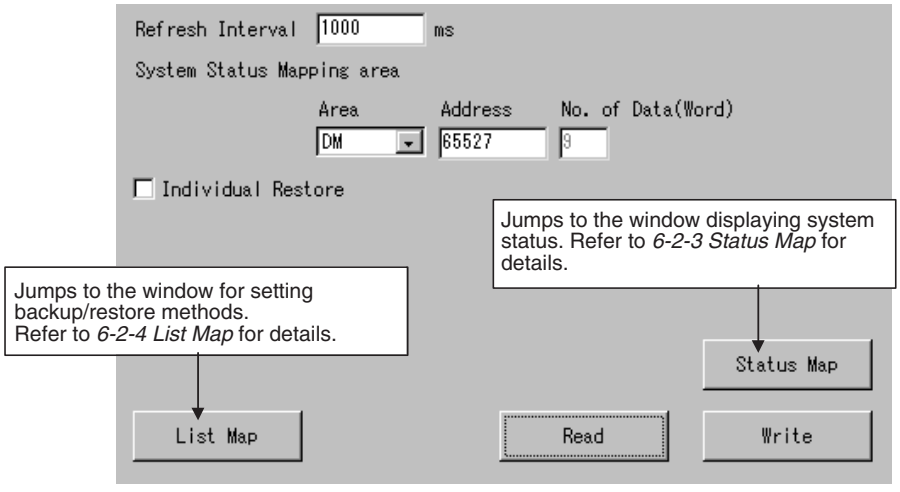

Settings

Item	Setting
Refresh Interval	The refresh interval is the cycle used by the memory unit, status memory, clock memory, and shutdown functions. The interval can be set between 1 and 9,999 ms. For example, if the interval is set to 10 s, the event memory (DM and CIO) will be backed up to the backup memory (SRAM) every 10 s, by means of the memory unit backup function.
System Status Mapping Area	Allocates the System Status Mapping Areas as follows: Area name: CIO, DM, SRAM Offset: CIO 0 to CIO 8183, DM 0 to DM 65527, SRAM 0 to SRAM 65527 The size is always 9 words. Set so that the same words are not allocated for other purposes in the event memory.
Individual Restore	When selected, the startup restore information set in the List Map Window is restored when the Open Network Controller starts, i.e., specified area data (SRAM) is copied to another specified area (DM and CIO). This function is used when setting the initial values in the event memory (DM and CIO) when the Open Network Controller starts up, or when setting the previously backed up data in the event memory (DM and CIO) when the Open Network Controller starts.

6-2-3 Status Map

A map listing the system statuses of the Open Network Controller is displayed.

Click the **Status Map** Button in the previously described SPR (System Status) Setting Window. The following System Status Map Window will be displayed.

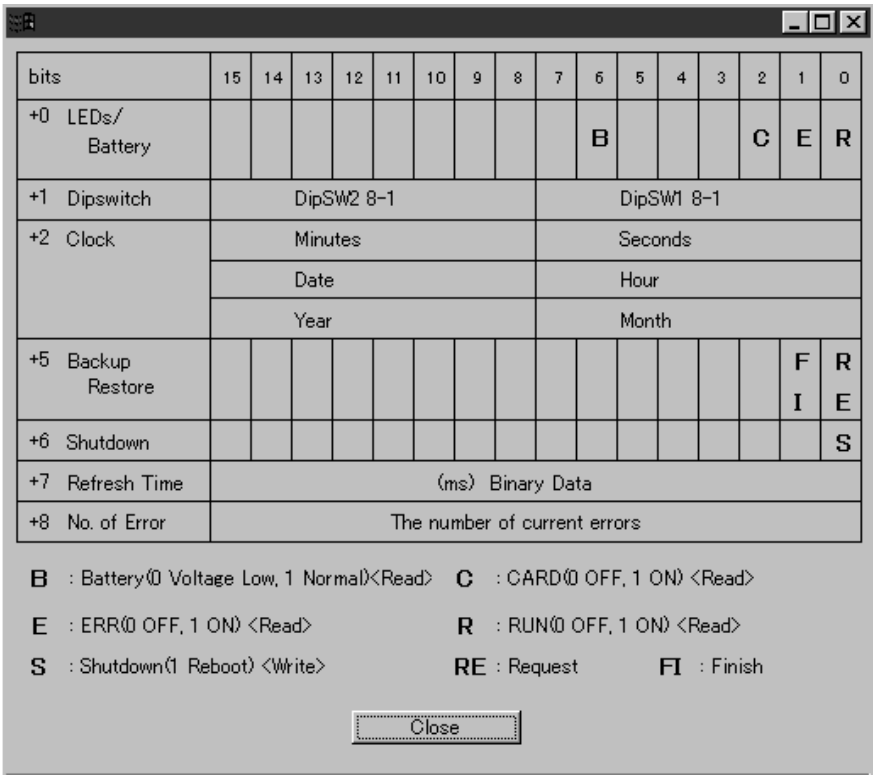

Note The system status is mapped in nine words from the first word set in the SPR (System Status) Setting Window.

Displayed Information

Item	Details
LEDs/Battery	Contains bits that are ON when the indicators are lit, and the area that is OFF when the battery is low. Example: When the RUN and CARD indicators are lit: 0x0045
Dipswitch	Displays the ON/OFF status of the DIP switch. Example: When DIP switch 2, pin 1 is ON: 0x0100
Clock	Display the ONC date/time in hexadecimal. Example: The ONC date time 09:10:27, Dec. 20, 2002: 0x1409, 0x021C
Backup Restore	When bit 0 of this word is ON, the information set for *Backup Restore Bit on* in the List Map is executed once. After executing, the Completion Bit (Bit 1) will turn ON. The user must turn OFF the Completion Bit; the SPR_UNIT will not turn it OFF.
Shutdown	When bit 0 is turned ON and then OFF, the ONC will reboot.
Refresh Time	Displays the actual refresh interval of the SPR_UNIT (time from processing start to finish). Example: 100 ms: 0x0064
No. of Error	Displays the number of errors that are occurring at present (in hexadecimal). Use FINS command (2102) to read the error information.

6-2-4 List Map

This window is used to set the backup and restore execution timing at the following times:

- At each refresh interval.
- When the Backup Restore Bit turns ON.
- At startup.

Copying can be performed from Area 1 to Area 2, or from Area 2 to Area 1.

Click the **List Map** Button in the SPR (System Status) Setting Window described previously. The following Restore Method Setting Window will be displayed.

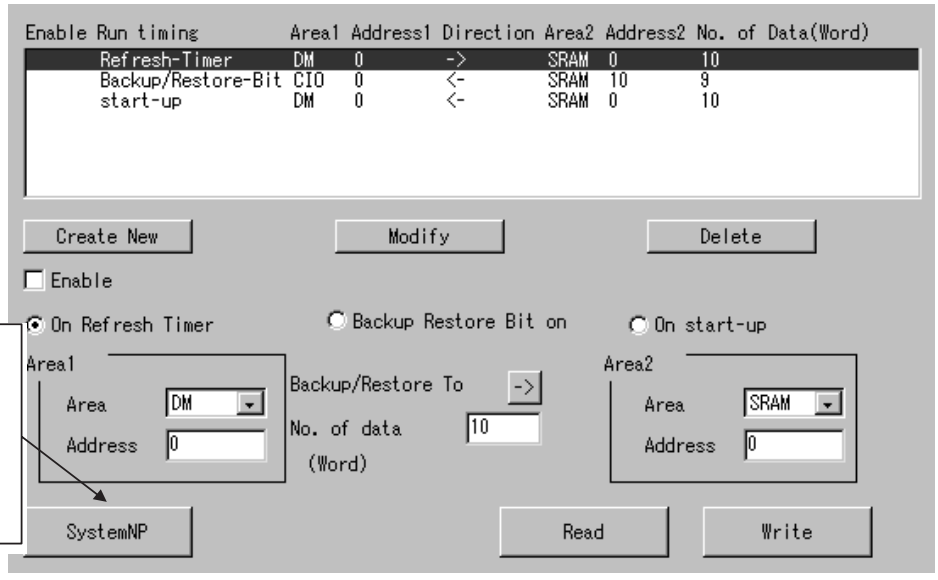

Returns to the SPR (System Status) Setting Window. Refer to *6-2-2 SPR (System Status)* for details.

Settings

Item	Settings
Enable	Set to enable or disable the mapping setting. Selected: Enabled (An asterisk is displayed.) Not selected: Disabled (The asterisk is deleted.)
On Refresh Timer	Performs backup/restore at every refresh interval.
Backup Restore Bit on	Performs backup/restore when the Backup Restore Bit in the Status Map is ON.
On start-up	Performs backup/restore at ONC startup. *Individual Restore* in the System Status Setting Window must be selected to enable this setting.
Area 1	Set the area of the backup source or restore destination. Area: CIO, DM Offset: CIO 0 to CIO 8191, DM 0 to DM 65535
Backup/Restore to	Set either backup or restore. The arrow will toggle between backup (right-facing arrow) and restore (left-facing arrow) each time the button is clicked.
No. of Data (Word)	Set the number of words to be transferred.
Area 2	Set the offset of the area of the backup source or restore destination (SRAM is fixed) Area: SRAM (backup memory) fixed Offset: SRAM 0 to SRAM 65213 The backup memory (SRAM) capacity is 65,214 words.

6-3 FINS Commands Addressed to SPR_UNIT

6-3-1 Overview

The methods for using FINS commands addressed to SPR_UNIT are described here.

The following FINS commands can be addressed to SPR_UNIT by the Open Network Controller.

Command code	Name
01 01	BACKUP MEMORY READ
01 02	BACKUP MEMORY WRITE
21 02	ERROR LOG READ
21 03	ERROR LOG CLEAR

6-3-2 BACKUP MEMORY AREA READ: 01 01

Command Format

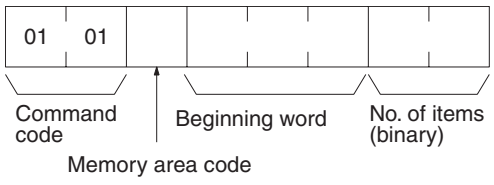

Response Format

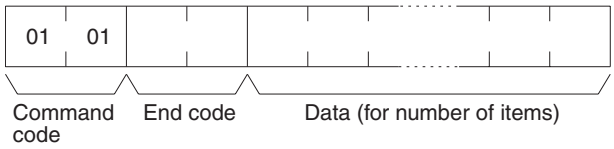

Parameters

Memory area code, beginning word, bit, number of items (command)

Specify the type of data to be read, the beginning word of the data to be read (the setting range is 0 to FEBD hexadecimal (0 to 65,213 decimal)), and the number of items of data to be read.

The memory areas that can be read are given in the following table. Refer to *Memory Area Designations* later in this section for the specific addresses that can be used.

Area	Data type	Memory area code (hex)	Bytes per item
SRAM Area	Bit ON/OFF status	32	1
	Word contents	B2	2

Data (response)

The data from the specified memory area is returned in sequence starting from the beginning word. The required number of bytes in total is calculated as follows: Number of bytes required by each item x number of items

For details regarding data configuration, refer to *Memory Area Designations* later in this section.

End code (response)

Refer to *19-1 Troubleshooting with FINS End Codes* for information on end codes.

Memory Area Designations

The memory area codes given in the following table are used to specify addresses to access in the event memory using FINS commands. “Bytes per item” indicates the number of bytes required in the FINS command or response for each item being accessed.

Area	Data type	Access length	Memory area code (hex)	Bytes per item
SRAM Area	General purpose	Bits	32	1
		Words	B2	2

Memory area addresses are designated in three bytes. The first and second byte are the word address and the third byte is the bit position when accessing bits.

When accessing bits, a maximum of 16 bits (i.e., items) can be accessed and they must all be in the same word.

When accessing words, specify 00 as the bit position (i.e., as the third byte).

6-3-3 BACKUP MEMORY AREA WRITE: 01 02

Writes data to the specified number of consecutive words starting from the specified word.

Command Format

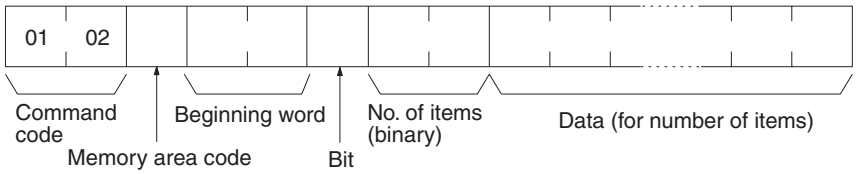

Response Format

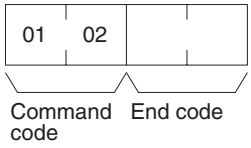

Parameters

Memory area code, beginning word, number of items (command)

Specify the type of data to be written, the beginning word of the data to be written (set between 0 and FEBD hexadecimal (0 and 65,213)), and the number of items of data to be written.

The memory areas that can be written are given in the following table. Refer to *Memory Area Designations* under *6-3-2 BACKUP MEMORY AREA READ: 01 01* for the specific addresses that can be used.

Area	Data type	Memory area code (hex)	Bytes per item
SRAM Area	Bit ON/OFF status	32	1
	Word contents	B2	2

Data (command)

The data to be written to the specified memory area is provided in sequence starting from the beginning word. The required number of bytes in total is calculated as follows:

Number of bytes required by each item x number of items

For details regarding data configuration, refer to *Memory Area Designations* under *6-3-2 BACKUP MEMORY AREA READ: 01 01*.

End code (response)

Refer to *19-1 Troubleshooting with FINS End Codes* for information on end codes.

Precautions

When writing bit ON/OFF status, a maximum of 16 bits (i.e., items) can be written in one command and they must all be in the same word.

6-3-4 ERROR LOG READ: 21 02

Reads the contents of the error log held in the backup memory.

Command Format

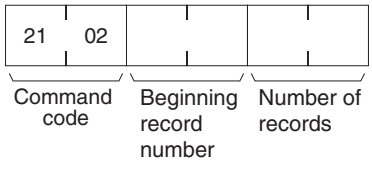

Response Format

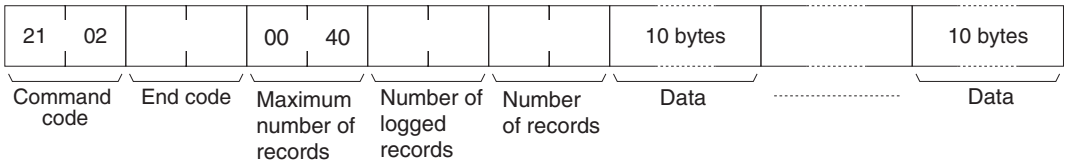

Parameters

Beginning record number (command)

Specify the beginning record number to be read from (0000 to 003F: 0 to 63).

Number of records (command)

Specify the number of records to be read (0001 to 0040: 1 to 64).

Maximum number of records (response)

The maximum number of records is always 0040 (64 records).

Number of logged records (response)

The number of error log records stored at the time the command is executed.

Data (response)

The error log for the specified number of records is returned in sequence starting from the beginning record number. The required number of bytes in total is calculated as follows: Number of records x 10 bytes. The error log data for each record is configured using 10 bytes, as shown in the following table.

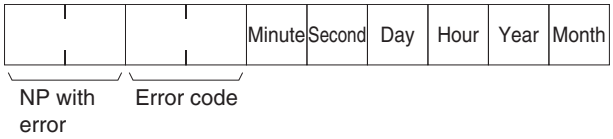

The time data is in BCD, and the NP name is in ASCII. For details on the NP where the error occurred, and error codes, refer to *SECTION 19 Troubleshooting.*

End code (response)

Refer to *19-1 Troubleshooting with FINS End Codes* for information on end codes.

Note

- If the specified beginning record number is greater than the stored number of error log records, the response will contain the command code and end code only.
- If the specified number of records is greater than the stored number of error log records, the number of records up to the last record stored at the time the command was executed will be returned, and an address range exceeded error will occur.
- If the specified number of records is large and will exceed the maximum response length, the number of records that can be returned without exceeding the response length will be returned, and a response length exceeded error will occur.

6-3-5 ERROR LOG CLEAR: 21 03

Clears the error log held in the backup memory.

Command Format

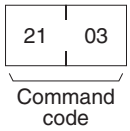

Response Format

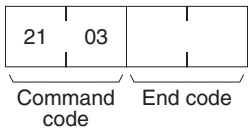

Parameters

End code (response)

Refer to *19-1 Troubleshooting with FINS End Codes* for information on end codes.

SECTION 7
ETN_UNIT (Ethernet Network Provider)

This section describes the ETN_UNIT Ethernet network provider (NP).

7-1 ETN_UNIT Functions 124
7-1-1 FINS Commands Addressed to ETN_UNIT 124
7-1-2 Precautions 124
7-2 ETN_UNIT Hardware Settings 124
7-3 ETN_UNIT Settings 124
7-3-1 Setting Startup Services 124
7-3-2 ETN (Ethernet) 125
7-3-3 IpTable 126
7-4 FINS Commands Addressed to ETN_UNIT 126
7-4-1 CONTROLLER DATA READ: 05 01 127
7-4-2 IP ADDRESS TABLE WRITE: 27 50 127
7-4-3 IP ADDRESS TABLE READ: 27 60 128
7-4-4 ADDRESS INFORMATION READ: 27 65 128

7-1 ETN_UNIT Functions

ETN_UNIT is a software component that functions like a Communications Unit (Ethernet Unit for PLCs) to perform FINS communications using an Ethernet network. If FINS commands are used on the Ethernet, ETN_UNIT must be registered as a startup service.

7-1-1 FINS Commands Addressed to ETN_UNIT

The following FINS commands can be addressed to ETN_UNIT.

Command code	Name
05 01	CONTROLLER DATA READ
27 50	IP ADDRESS TABLE WRITE
27 60	IP ADDRESS TABLE READ
27 65	ADDRESS DATA READ

7-1-2 Precautions

- The IP address of the Open Network Controller is set in the software. Refer to *4-2 LAN Settings (IP Address)*. The default setting of the IP address is 10.0.0.1 and the Subnet Mask is 255.0.0.0.
- FINS communications use the UDP protocol. Confirm the reception of FINS commands by processing the FINS responses in the application program.
- FINS communications will not be possible with nodes that are not registered in the IP address table. The address of the destination node must be registered in the IP address tables of both nodes involved in FINS communications.
- The IP fragmentation queue in the Open Network Controller can contain up to 200 entries. Each buffer is 4 Kbytes.
- FINS node number 255 cannot be used for IP broadcast transmissions.

7-2 ETN_UNIT Hardware Settings

The Open Network Controller has a built-in 10Base-T/100Base-TX LAN port, so no hardware setup is required except for connecting cables.

Use 10Base-T or 100Base-TX Ethernet cable to connect the Open Network Controller's LAN port.

For details on cable connections, refer to *3-8 Connecting Ethernet Cables*.

7-3 ETN_UNIT Settings

The ETN_UNIT startup service settings, network number and node number, and network tables (corresponding FINS node number and IP address of other nodes) must be set.

7-3-1 Setting Startup Services

The ETN_UNIT service must be registered. The ETN_UNIT service are registered by default. Use the following method to register the ETN_UNIT service, if it has been deleted.

Delete the ETN_UNIT service if FINS communications will not be used on the Ethernet.

1,2,3...

1. Select ***Startup Services*** from the Menu Window. The Startup Service Setting Window will be displayed showing the current settings.
2. Select ***ETN*** in the Service Name Box and then click the **Create New** Button. The service will be registered as shown in the following window.

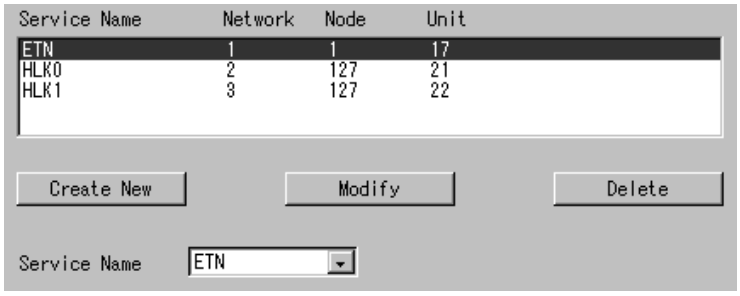

3. Click the **Write** Button.

7-3-2 ETN (Ethernet)

Use the following procedure to set the network number and node number of ETN_UNIT.

Click ***ETN (Ethernet)*** in the Menu Window. The following window will be displayed showing the current settings.

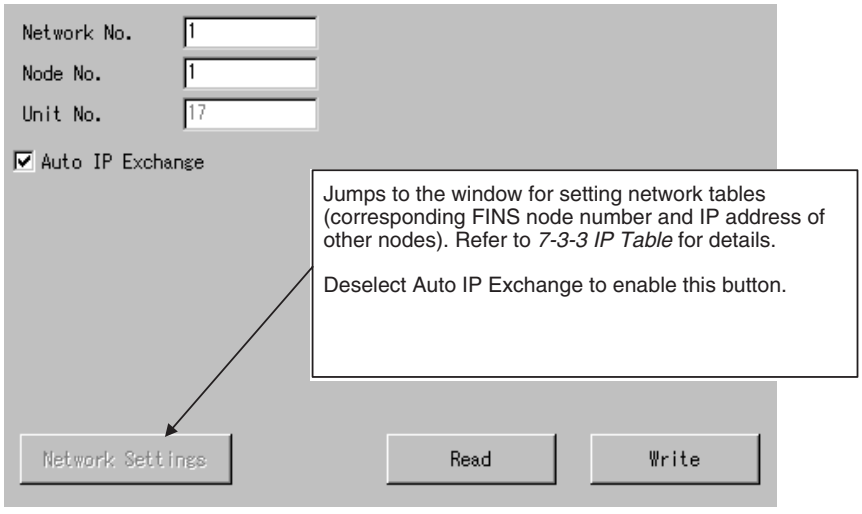

Settings

Item	Setting
Network No.	Set the network number of the ETN_UNIT between 1 and 127.
Node No.	Set the node number of the ETN_UNIT between 1 and 253.
Unit No.	The default unit number for the ETN_UNIT is displayed. There is no reason to change the default setting.
Auto IP Exchange	If this item is selected and the table set under *7-3-3 IpTable* does not exist, the leftmost 3 bytes of the ONC's IP address (192.168.39 for 192.168.39.2), will be matched with the remote node, and the IP addresses will be automatically allocated. For example, If the remote node number is 10, and the IP address of node 10 will be automatically allocated as 192.168.39.10. The table set under *7-3-3 IpTable* will override whether this item is selected. If this item is selected, delete all *IpTable* settings.

7-3-3 IpTable

The FINS node numbers of other nodes on the Ethernet can be set using their IP addresses. This allows messages to be sent to nodes using FINS, and the messages will be sent to the IP address corresponding to the FINS node number that is set under *IpTable*. Up to 48 IP addresses can be registered.

Click ***IpTable*** in the Menu Window. The following window will be displayed showing the current settings.

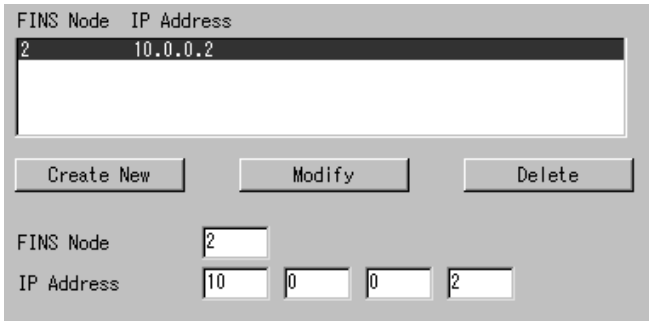

Settings

Item	Setting
FINS Node	Set the FINS node number of the other nodes between 1 and 253.
IP Address	Set the IP address corresponding to the FINS node number above it.

7-4 FINS Commands Addressed to ETN_UNIT

This section describes the FINS commands that can be addressed to ETN_UNIT. These commands are listed in the following table.

Command code	Name
05 01	CONTROLLER DATA READ
27 50	IP ADDRESS TABLE WRITE
27 60	IP ADDRESS TABLE READ
27 65	ADDRESS DATA READ

7-4-1 CONTROLLER DATA READ: 05 01

Reads the following data from the ETN_UNIT running on the Open Network Controller.

- Model
- Version

Command Format

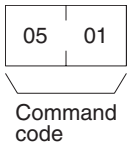

Response Format

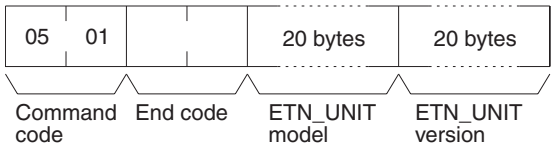

Parameters

ETN_UNIT model and version (response)

Each is returned in not more than 20 bytes in ASCII (i.e., 20 ASCII characters). If the model or version requires less than 20 characters, spaces will be inserted to fill the remainder.

End code (response)

Refer to *19-1 Troubleshooting with FINS End Codes* for information on end codes.

7-4-2 IP ADDRESS TABLE WRITE: 27 50

Writes the IP address table in ETN_UNIT.

Command Format

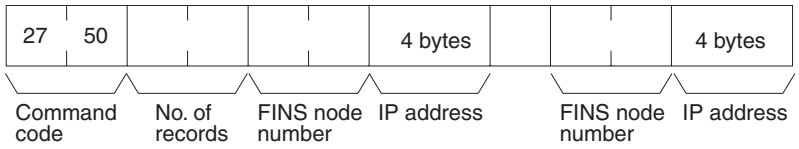

Response Format

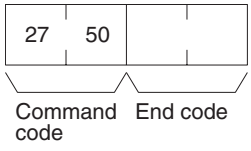

Parameters

Number of records (command)

The number of records to be written is specified between 0000 and 0064 Hex (0 and 100 decimal) in the command. If this value is set to 0, the IP address table will be cleared so that no records are registered.

FINS node number and IP address (command)

Specify the FINS node number and corresponding IP address for nodes with which communications will be performed. Up to 32 pairs can be specified.

End code (response)

Refer to *19-1 Troubleshooting with FINS End Codes* for information on end codes.

7-4-3 IP ADDRESS TABLE READ: 27 60

Reads the IP address table in ETN_UNIT.

Command Format

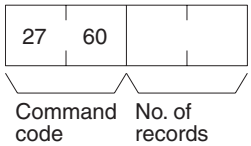

Response Format

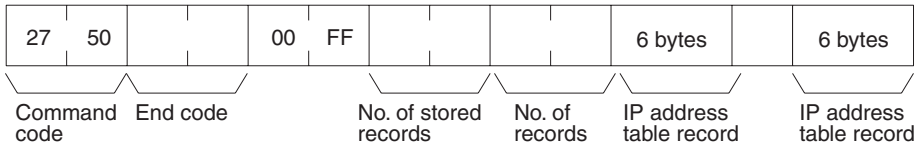

Parameters

Number of records (command, response)

The number of records to be read is specified between 0000 and 0030 Hex (0 and 48 decimal) in the command. If this value is set to 0, the number of stored records is returned but the IP address table records are not returned.

The response returns the actual number of records read.

Number of stored records (response)

The number of IP address table records stored at the time the command is executed is returned as a hexadecimal number.

IP address table records (response)

The number of IP address table records specified in the number of records parameter is returned. The total number of bytes in the IP address table records is calculated as the number of records x 6 bytes/record. The configuration of the 6 bytes of data in each record is as shown in the following diagram.

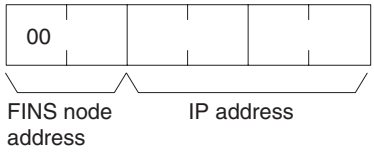

End code (response)

Refer to *19-1 Troubleshooting with FINS End Codes* for information on end codes.

7-4-4 ADDRESS INFORMATION READ: 27 65

Read FINS node numbers and IP addresses.

Command Format

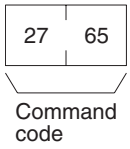

Response Format

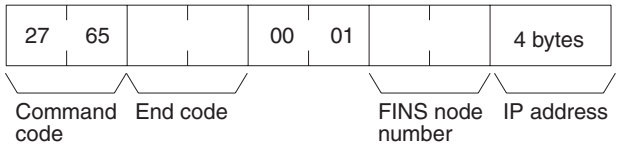

Parameters

FINS node number and IP address (response)

The currently set FINS node number and IP address are returned as hexadecimal values.

SECTION 8
CLK_UNIT (Controller Link Network Provider)

This section describes the CLK_UNIT Controller Link network provider (NP).

8-1 CLK_UNIT Functions 132
8-1-1 FINS Commands Addressed to CLK_UNIT 132
8-1-2 Allocating Event Memory 132
8-1-3 Precautions 132
8-2 CLK_UNIT Hardware Settings. 133
8-3 CLK_UNIT Settings 133
8-3-1 Setting Startup Services 133
8-3-2 CLK (Controller Link) 133
8-3-3 CLK UNIT 134
8-4 Controller Link Status Area 135
8-4-1 Controller Link Status Area Display 135
8-4-2 Network Status Display 136
8-4-3 Data Link Status Area Display 139
8-5 FINS Commands Addressed to CLK_UNIT 139

8-1 CLK_UNIT Functions

CLK_UNIT is a software component that functions like a Communications Unit to connect to a Controller Link network through a Controller Link Support Board.

8-1-1 FINS Commands Addressed to CLK_UNIT

The following FINS commands that are supported by the Controller Link Support Board can be addressed to CLK_UNIT. Use CX-Net to set data link areas.

Command code		Data links		Name
		Active	Stopped	
04	01	No	OK	RUN
	02	OK	No	STOP
05	01	OK	OK	CONTROLLER DATA READ
06	01	OK	OK	CONTROLLER STATUS READ
	02	OK	OK	NETWORK STATUS READ
	03	OK	OK	DATA LINK STATUS READ
08	01	OK	OK	LOOPBACK TEST
	02	OK	OK	BROADCAST TEST RESULTS READ
	03	OK	OK	BROADCAST TEST DATA SEND
21	02	OK	OK	ERROR LOG READ
	03	OK	OK	ERROR LOG CLEAR

8-1-2 Allocating Event Memory

If data link areas are allocated in event memory, the Open Network Controller can participate in the data links on the Controller Link Network, and personal computers and other devices on an Ethernet network can access remote data link areas by reading/writing event memory. In the Open Network Controller, the CIO and DM areas can be used to create data link areas.

Use CX-Net to set data link areas.

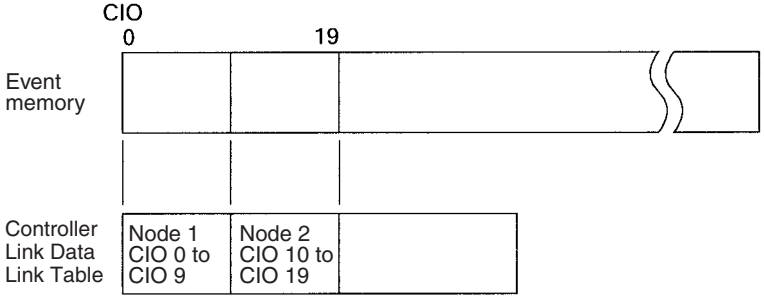

8-1-3 Precautions

- The data link areas must be set so that they do not use words allocated for other purposes.
- The refresh interval from the data link memory on the Controller Link Support Board to event memory is set using the Setting Tool for the ONC.
- The offset address for the data link area that can be set using CX-Net must be set between CIO 0000 and CIO 2555 or DM 00000 and DM 24575.

8-2 CLK_UNIT Hardware Settings

One of the following Controller Link Boards must be mounted in the Open Network Controller to enable use of the Controller Link Network.

Expansion Board	Model
Controller Link Board	3G8F7-CLK12(-V1) 3G8F7-CLK52(-V1) 3G8F7-CLK21(-V1)

For details on installation methods, refer to *3-3 Mounting Expansion Boards.*

For details on DIP switch settings, and Controller Link cable connection methods, refer to the operation manuals for the Controller Link Board being used.

8-3 CLK_UNIT Settings

The CLK_UNIT startup service settings, network number and node number, and Controller Link data link settings must be set.

8-3-1 Setting Startup Services

The CLK_UNIT service must be registered.

1,2,3...

1. Select ***Startup Services*** from the Menu Window. The Startup Service Setting Window will be displayed showing the current settings.
2. Select ***Clk0*** in the Service Name Box and then click the **Create New** Button. The service will be registered as shown in the following window.

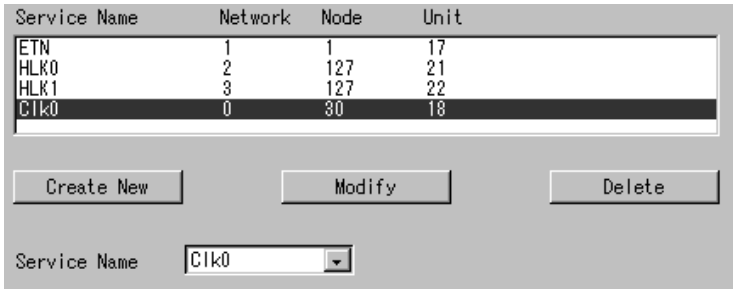

3. Click the **Write** Button.

8-3-2 CLK (Controller Link)

Use the following procedure to set the network number and node number of CLK_UNIT.

Click ***CLK (Controller Link)*** in the Menu Window. The following window will be displayed showing the current settings.

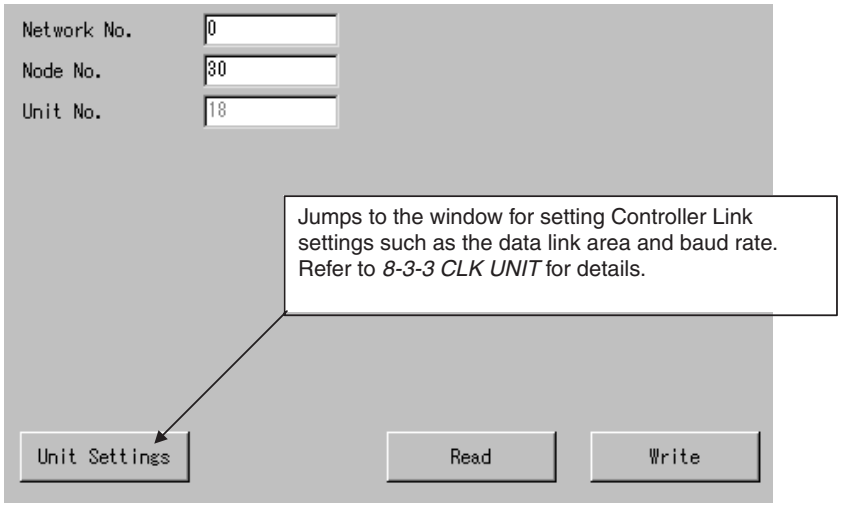

Settings

Item	Setting
Network No.	Set the network number of the CLK_UNIT between 1 and 127.
Node No.	Set the node number of the CLK_UNIT between 1 and 62.
Unit No.	The default unit number for the CLK_UNIT is displayed. There is no reason to change the default setting.

8-3-3 CLK UNIT

The CLK_UNIT Network Status words, Data Link Status words, baud rate, board name, and refresh interval must be set.

Click ***CLK UNIT*** in the Menu Window. The following window will be displayed showing the current settings.

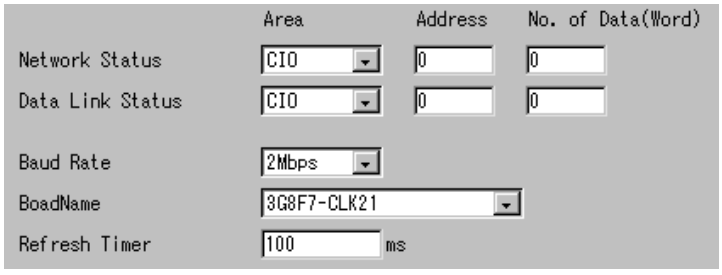

Note Always set the baud rate to the same baud rate used by other Controller Link Units on the network.

Settings

Item	Setting
Network Status	Specify the words used to store Controller Link network statuses within the following ranges. DM 0 to DM 65535 CIO 0 to CIO 8191 SRAM 0 to SRAM 65213 Size: 0 to 40 words For details on Network Status contents, refer to *8-4 Controller Link Status Area*. Set so that the same words are not allocated for other purposes in the event memory.
Data Link Status	Specify the words used to store Controller Link data link statuses within the following ranges. DM 0 to DM 65535 CIO 0 to CIO 8191 SRAM 0 to SRAM 65213 Size: 0 to 32 words For details on Data Link Status contents, refer to *8-4 Controller Link Status Area*. Set so that the same words are not allocated for other purposes in the event memory.
Baud Rate	Set the baud rate for the Controller Link network to 250 kbps, 500 kbps, 1 Mbps, or 2 Mbps.
Board Name	Set the model of the Controller Link Board to be used.
Refresh Timer	Set the interval used to refresh data between the Controller Link Board and ONC event memory within the range 1 to 9,999 ms. If the interval is set below the default value (100 ms), the load to the CPU will increase, and this will have a negative effect on overall system performance.

8-4 Controller Link Status Area

8-4-1 Controller Link Status Area Display

The Controller Link Status Area consists of the Network Status (40 words) and the Data Link Status (32 words), as shown in the following table.

Network Status

Event memory word offset	Name	Size (bytes)
0	Local network number	1
	Local node number	1
1	Unit number	1
	Polling node number	1
2	Communications cycle timer time	2
3	Communications cycle timer maximum time	2
4	List of nodes participating in network	8
8	Reserved	20
	Reserved	5
	Reserved	5
	Reserved	2
	Reserved	2

Event memory word offset	Name	Size (bytes)
25	System setting switch	1
	Board status	1
26	Table status	1
	Network status	1
27	Reserved	2
	Reserved	8
	Reserved	8
36	Date and time (year, month, day, hour, minute, second)	8

Data Link Status

Event memory word offset	Name	Size (bytes)
0	Startup mode	1
	Startup node number	1
1	Data link status (node 1)	1
	Data link status (node 2)	1
2	:	:
	:	:
31	Data link status (node 61)	1
	Data link status (node 62)	1

The contents of each status display are provided next.

8-4-2 Network Status Display

Local Network Number (Word Offset: 0 High Byte, 1 Byte Total)

Value	Contents	Details
01 to 7F	Network number	Hexadecimal

Local Node Number (Word Offset: 0 Low Byte, 1 Byte Total)

Value	Contents	Details
01 to 3E	Node number	Hexadecimal

Unit Number (Word Offset: 1 High Byte, 1 Byte Total)

Value	Contents	Details
00 to 0F	Unit number	Hexadecimal

Polling Node Number (Word Offset: 1 Low Byte, 1 Byte Total)

Value	Contents	Details
00	Not participating in network	Hexadecimal
01 to 3E	Polling node number after joining network	

Communications Cycle Timer Time (Word Offset: 2, 2 Bytes Total)

Value	Contents	Details
0000 to FFFF	Actual communications cycle time	Binary data in units of 100 µs.

Communications Cycle Timer Maximum Time (Word Offset: 3, 2 Bytes Total)

Value	Contents	Details
0000 to FFFF	Maximum communications cycle time	Binary data in units of 100 µs.

List of Nodes Participating in Network (Word Offset: 4, 8 Bytes Total)

Off-set	Bit 15	Bit 14	Bit 13	Bit 12	Bit 11	Bit 10	Bit 9	Bit 8	Bit 7	Bit 6	Bit 5	Bit 4	Bit 3	Bit 2	Bit 1	Bit 0
+4	8	7	6	5	4	3	2	1	16	15	14	13	12	11	10	9
+5	24	23	22	21	20	19	18	17	32	31	30	29	28	27	26	25
+6	40	39	38	37	36	35	34	33	48	47	46	45	44	43	42	41
+7	56	55	54	53	52	51	50	49	---	---	62	61	60	59	58	57

---: Reserved

The statuses of the bits have the following meanings.

Status	Meaning
0	Not participating
1	Participating

System Setting Switch (Word Offset: 25, 1 Byte Total)

Bit number	Name	Contents
15	Polling Node/Ordinary Node	1: Polling node, 0: Ordinary node
13 to 12	Transmission Path Format	00/01/10: Token link mode 11: Token bus mode
11 to 8	Baud Rate Setting	03: 2 Mbps 02: 1 Mbps 01: 500 kbps 00: 250 kbps Optical models have a fixed baud rate of 2 Mbps.

Board Status (Word Offset: 25, 1 Byte Total)

Bit number	Bit name	Contents
7	Error Log Present	
6	Power Supply Status/terminating Resistance Setting Status	Optical models: 1: Power ON, 0: Power OFF Wired types: 1: Terminating resistance ON, 0: Terminating resistance OFF
5	Reserved	
4	Communications Controller Transmission Error	JABBER has occurred.
3	Hardware Error	
2	Network Parameter mismatch	
1	Node Number Duplication	
0	Node Number Setting Range Error	

Table Status (Word Offset: 26, 1 Byte Total)

Bit number	Name	Contents
15	EEP-ROM Error	
14	0 (fixed)	
13	0 (fixed)	
12	0 (fixed)	
11	0 (fixed)	
10	Routing table error	
9	Data link table error	
8	Network parameter error	

Network Status (Word Offset: 26, 1 Byte Total)

Bit number	Name	Contents
7	Participating in Network	1: Local node bit is ON in the List of Nodes Participating in the Network. 0: Local node bit is OFF in the List of Nodes Participating in the Network.
6	Network Parameter Mismatch	
5	Processing Network Participation	1: Removed from network (from when OPEN is sent until CLOSE is sent). (Local node bit is OFF in the List of Nodes Participating in the Network.) 0: CLOSE has been sent or node has been added to network. (Local node bit is ON in the List of Nodes Participating in the Network.)
4	0 (fixed)	
3	0 (fixed)	
2	0 (fixed)	
1	0 (fixed)	
0	0 (fixed)	

Date and Time (Word Offset: 36, 8 Bytes Total)

Address	Name	Contents
+0	Year	Not used (BCD data)
+1	Month	
+2	Day	
+3	Hour	
+4	Minute	
+5	Second	
+6	Flag area	
+7		

8-4-3 Data Link Status Area Display

Startup Mode (Word Offset: 0, 1 Byte Total)

Bit number	Name	Contents
15	Local Data Link Active Flag	0: Stopped, 1: Active
14	(Not used)	
13	(Not used)	
12	(Not used)	
11	Startup Mode (hexadecimal: 1 digit)	0: Stopped 1: User set 2: Automatically set 3: Status monitor (Board not participating in data links.)
10		
9		
8		

Startup Node Number (Word Offset: 0 Low Byte, 1 Byte Total)

Value	Contents	Details
00	Data link stopped	(Hexadecimal)
01 to 3E	Data link startup node number	

Data Link Status (Word Offset: 1, 62 Bytes Total)

Name	Corresponding node number
Data Link Status	Node 1 (High byte)
	Node 2 (Low byte)
	to
	Node 32
	Node 33
	Node 34
	to
	Node 62

Bit number	Name	Contents
7	Reserved	
6	Receive Area Remaining during Editing	0: Normal, 1: Error
5	Insufficient Receive Area during Editing	0: Normal, 1: Error
4	Offset Error	0: Normal, 1: Error
3	Data Link Active	0: Stopped, 1: Active
2	Communications Error	0: Normal, 1: Error
1	Unit Error	0: Normal, 1: Error
0	Operating Status	0: Stopped, 1: Operating

Note The data link status contents for another node are valid only when the Data Link Active Flag (bit 3) for the local node is ON and the Communications Error Flag (bit 2) for the local node is OFF. (If there is an error at the local node's data link, the data link status of other nodes is meaningless.)

8-5 FINS Commands Addressed to CLK_UNIT

The following FINS commands can be addressed to CLK_UNIT through the Controller Link Support Board (3G8F7-CLK12(-V1), 3G8F7-CLK52(-V1), 3G8F7-CLK21(-V1)).

Refer to the *Controller Link Support Board Operation Manual* (W307) for information on these FINS commands.

Command code		Data links		Name
		Active	Stopped	
04	01	No	OK	RUN
	02	OK	No	STOP
05	01	OK	OK	CONTROLLER DATA READ
06	01	OK	OK	CONTROLLER STATUS READ
	02	OK	OK	NETWORK STATUS READ
	03	OK	OK	DATA LINK STATUS READ
08	01	OK	OK	LOOPBACK TEST
	02	OK	OK	BROADCAST TEST RESULTS READ
	03	OK	OK	BROADCAST TEST DATA SEND
21	02	OK	OK	ERROR LOG READ
	03	OK	OK	ERROR LOG CLEAR

SECTION 9
SLK_UNIT (SYSMAC LINK Network Provider)

This section describes the SLK_UNIT SYSMAC LINK network provider (NP).

9-1 SLK_UNIT Functions 142
9-1-1 FINS Commands Addressed to SLK_UNIT 142
9-1-2 Allocating Event Memory 142
9-1-3 Precautions 142
9-2 SLK_UNIT Hardware Settings 143
9-3 SLK_UNIT Settings 143
9-3-1 Setting Startup Services 143
9-3-2 SLK 143
9-3-3 SLK UNIT 144
9-4 SYSMAC LINK Status Area 145
9-4-1 SYSMAC LINK Status Area Display 145
9-4-2 Network Status Display 146
9-4-3 Data Link Status Area Display 148
9-5 FINS Commands Addressed to SLK_UNIT 149

9-1 SLK_UNIT Functions

SLK_UNIT is a software component that functions like a Communications Unit to connect to a SYSMAC LINK network through a SYSMAC LINK Support Board.

9-1-1 FINS Commands Addressed to SLK_UNIT

The following FINS commands can be addressed to SLK_UNIT (i.e., to the SYSMAC LINK Support Board). Data link tables for the SYSMAC LINK Support Board in the Open Network Controller are set using CX-Net.

Command code		Data links		Name
		Active	Stopped	
04	01	No	OK	RUN
	02	OK	No	STOP
05	01	OK	OK	CONTROLLER DATA READ
06	01	OK	OK	CONTROLLER STATUS READ
	02	OK	OK	NETWORK STATUS READ
	03	OK	OK	DATA LINK STATUS READ
08	01	OK	OK	LOOPBACK TEST
	02	OK	OK	BROADCAST TEST RESULTS READ
	03	OK	OK	BROADCAST TEST DATA SEND
21	02	OK	OK	ERROR LOG READ
	03	OK	OK	ERROR LOG CLEAR

9-1-2 Allocating Event Memory

If data link words for are allocated in event memory, the Open Network Controller can participate in the data links on the SYSMAC LINK Network, and personal computers and other devices on an Ethernet network can access remote data link areas by reading/writing event memory.

Data link areas are set using CX-Net.

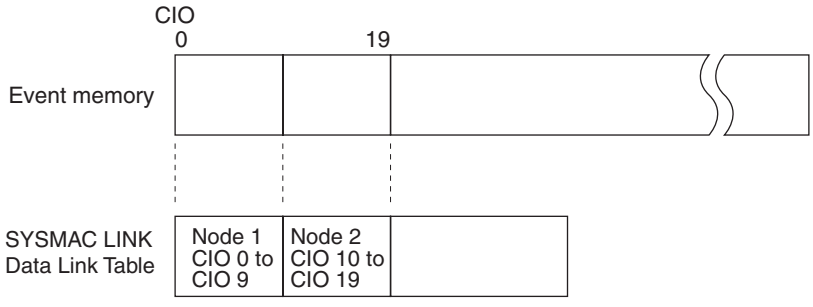

9-1-3 Precautions

- Data link areas must be set so that they do not use words allocated for other purposes.
- The refresh interval from the data link memory on the SYSMAC LINK Support Board to event memory is set using the Setting Tool (refresh interval setting).

9-2 SLK_UNIT Hardware Settings

One of the following SYSMAC LINK Boards must be mounted in the Open Network Controller to enable use of the SYSMAC LINK Network.

Expansion Board	Model
SYSMAC LINK Board	3G8F7-SLK11 3G8F7-SLK21

For details on installation methods, refer to *3-3 Mounting Expansion Boards.*

For details on DIP switch settings, and SYSMAC LINK cable connection methods, refer to the *SYSMAC LINK Support Board Operation Manual* (W390).

9-3 SLK_UNIT Settings

The SLK_UNIT startup service settings, network number and node number, and SYSMAC LINK data link settings must be set.

9-3-1 Setting Startup Services

The SLK_UNIT service must be registered.

1,2,3...

1. Select ***Startup Services*** from the Menu Window. The Startup Service Setting Window will be displayed showing the current settings.
2. Select ***Slk0*** in the Service Name Box and then click the **Create New** Button. The service will be registered as shown in the following window.

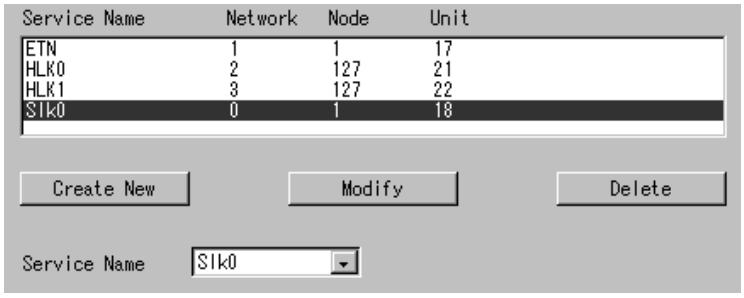

3. Click the **Write** Button.

9-3-2 SLK

Use the following procedure to set the network number and node number of SLK_UNIT.

Click ***SLK (SYSMAC Link)*** in the Menu Window. The following window will be displayed showing the current settings.

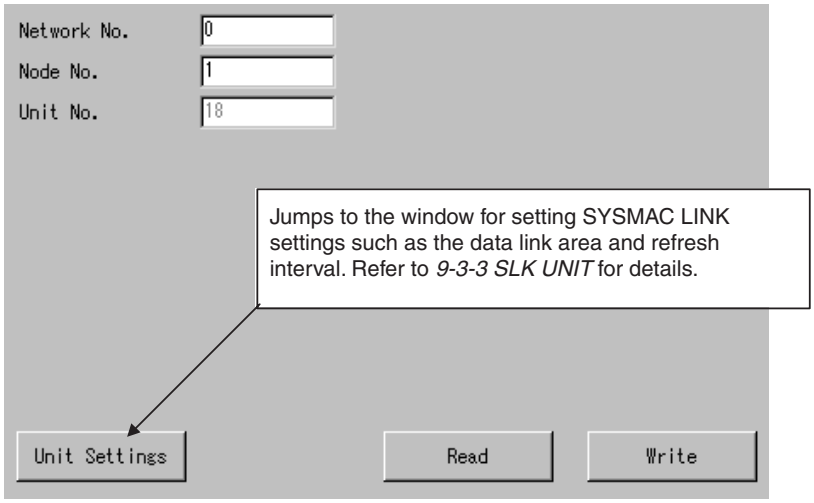

Settings

Item	Setting
Network No.	Set the network number of the SLK_UNIT between 1 and 127.
Node No.	Set the node number of the SLK_UNIT between 1 and 62.
Unit No.	The default unit number for the SLK_UNIT is displayed. There is no reason to change the default setting.

9-3-3 SLK UNIT

The SLK_UNIT Network Status, Data Link Status, baud rate, board name, and refresh interval must be set.

Click ***SLK UNIT*** in the Menu Window. The following window will be displayed showing the current settings.

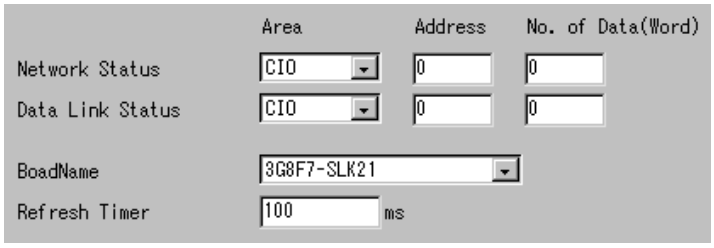

Settings

Item	Setting
Network Status	Set the area used to store SYSMAC LINK network statuses within the following ranges. DM 0 to DM 65535 CIO 0 to CIO 8191 SRAM 0 to SRAM 65213 Size: 0 to 40 words For details on network status contents, refer to *9-4 SYSMAC LINK Status Area*. Set so that the same words are not allocated for other purposes in the event memory.
Data Link Status	Set the area used to store SYSMAC LINK data link statuses within the following ranges. DM 0 to DM 65535 CIO 0 to CIO 8191 SRAM 0 to SRAM 65213 Size: 0 to 32 words For details on data link status contents, refer to *9-4 SYSMAC LINK Status Area*. Set so that the same words are not allocated for other purposes in the event memory.
Board Name	Set the model of the SYSMAC LINK Board to be used.
Refresh Timer	Set the interval used to refresh data between the SYSMAC LINK Board and ONC event memory within the range 1 to 9,999 ms. If the interval is set below the default value (100 ms), the load to the CPU will increase, and this will have a negative effect on overall system performance.

9-4 SYSMAC LINK Status Area

9-4-1 SYSMAC LINK Status Area Display

The SYSMAC LINK Status Area consists of the Network Status (40 words) and the Data Link Status (32 words), as shown in the following table.

Network Status

Event memory word offset	Name	Size (bytes)
0	Local network number	1
	Local node number	1
1	Unit number	1
	Polling node number	1
2	Communications cycle timer time	2
3	Communications cycle timer maximum time	2
4	List of nodes participating in network	8
8	Reserved	20
	Reserved	5
	Reserved	5
	Reserved	2
	Reserved	2
25	System setting switch	1
	Board status	1

Event memory word offset	Name	Size (bytes)
26	Table status	1
	Network status	1
27	Reserved	2
	Reserved	8
	Reserved	8
36	Date and time (year, month, day, hour, minute, second)	8

Data Link Status

Event memory word offset	Name	Size (bytes)
0	Startup mode	1
	Startup node number	1
1	Data link status (1st node)	1
	Data link status (2nd node)	1
2	:	:
	:	:
31	Data link status (61st node)	1
	Data link status (62nd node)	1

The contents of each status display are provided next.

9-4-2 Network Status Display

Local Network Number (Word Offset: 0 High Byte, 1 Byte Total)

Value	Contents	Details
01 to 7F	Network number	Hexadecimal

Local Node Number (Word Offset: 0 Low Byte, 1 Byte Total)

Value	Contents	Details
01 to 3E	Node number	Hexadecimal

Unit Number (Word Offset: 1 High Byte, 1 Byte Total)

Value	Contents	Details
00 to 0F	Unit number	Hexadecimal

Polling Node Number (Word Offset: 1 Low Byte, 1 Byte Total)

Value	Contents	Details
00	Not participating in network	Hexadecimal
01 to 3E	Polling node number after joining network	

Communications Cycle Timer Time (Word Offset: 2, 2 Bytes Total)

Value	Contents	Details
0000 to FFFF	Actual communications cycle time	Binary data in units of 100 µs.

Communications Cycle Timer Maximum Time (Word Offset: 3, 2 Bytes Total)

Value	Contents	Details
0000 to FFFF	Maximum communications cycle time	Binary data in units of 100 µs.

List of Nodes Participating in Network (Word Offset: 4, 8 Bytes Total)

Off-set	Bit 15	Bit 14	Bit 13	Bit 12	Bit 11	Bit 10	Bit 9	Bit 8	Bit 7	Bit 6	Bit 5	Bit 4	Bit 3	Bit 2	Bit 1	Bit 0
+4	8	7	6	5	4	3	2	1	16	15	14	13	12	11	10	9
+5	24	23	22	21	20	19	18	17	32	31	30	29	28	27	26	25
+6	40	39	38	37	36	35	34	33	48	47	46	45	44	43	42	41
+7	56	55	54	53	52	51	50	49	---	---	62	61	60	59	58	57

---: Reserved

The statuses of the bits have the following meanings.

Status	Meaning
0	Not participating
1	Participating

System Setting Switch (Word Offset: 25, 1 Byte Total)

Bit number	Name	Contents
15	Polling Node/Ordinary Node	1: Polling node, 0: Ordinary node
14 to 8	Reserved	---

Board Status (Word Offset: 25, 1 Byte Total)

Bit number	Name	Contents
7	Error Log Present	---
6	Power Supply Status	Optical models: 1: Power ON, 0: Power OFF
5	Reserved	---
4	Communications Controller Send Error	JABBER has occurred.
3	Hardware Error	---
2	Network Parameter Mismatch	---
1	Node Number Duplication	---
0	Node Number Setting Range Error	---

Table Status (Word Offset: 26, 1 Byte Total)

Bit number	Name	Contents
15	EEP-ROM Error	---
14	0 (fixed)	---
13	0 (fixed)	---
12	0 (fixed)	---
11	0 (fixed)	---
10	Routing Table Error	---
9	Data Link Table Error	---
8	Network Parameter Error	---

Network Status (Word Offset: 26, 1 Byte Total)

Bit number	Name	Contents
7	Participating in Network	1: Local node bit is ON in the List of Nodes Participating in the Network. 0: Local node bit is OFF in the List of Nodes Participating in the Network.
6	Network Parameter Mismatch	---
5	Processing Network Participation	1: Removed from network (from when OPEN is sent until CLOSE is sent). (Local node bit is OFF in the List of Nodes Participating in the Network.) 0: CLOSE has been sent or node has been added to network. (Local node bit is ON in the List of Nodes Participating in the Network.)
4	0 (fixed)	
3	0 (fixed)	
2	0 (fixed)	
1	0 (fixed)	
0	0 (fixed)	

Date and Time (Word Offset: 36, 8 Bytes Total)

Address	Name	Contents
+0	Year	Not used (BCD data)
+1	Month	
+2	Day	
+3	Hour	
+4	Minute	
+5	Second	
+6	Flag area	
+7		

9-4-3 Data Link Status Area Display

Startup Mode (Word Offset: 0, 1 Byte Total)

Bit number	Area name	Contents
15	Local Data Link Active Flag	0: Stopped, 1: Active
14	(Not used)	
13	(Not used)	
12	(Not used)	
11	Startup Mode (hexadecimal: 1 digit)	0: Stopped 1: User set 2: Automatically set 3: Status monitor
10		
9		
8		

Startup Node Number (Word Offset: 0 Low Byte, 1 Byte Total)

Value	Contents	Details
00	Data link stopped	(Hexadecimal)
01 to 3E	Data link startup node number	

Data Link Status (Word Offset: 1, 62 Bytes Total)

Area name	Corresponding node number
Data link status	1st node (High byte)
	2nd node (Low byte)
	to
	32nd node
	33rd node
	34th node
	to
	62nd node

Bit number	Name	Contents
7	Reserved	
6	Reserved	
5	Reserved	
4	Reserved	
3	Data Link Active	0: Stopped, 1: Active
2	Communications Error	0: Normal, 1: Error
1	Unit Error	0: Normal, 1: Error
0	Operating Status	0: Stopped, 1: Operating

Note The data link status contents for another node are valid only when the Data Link Active Flag (bit 3) for the local node is ON and the Communications Error Flag (bit 2) for the local node is OFF. (If there is an error at the local node's data link, the data link status of other nodes is meaningless.)

9-5 FINS Commands Addressed to SLK_UNIT

The following FINS commands can be addressed to SLK_UNIT through the SYSMAC LINK Support Board (3G8F7-SLK11, 3G8F7-SLK21).

Refer to the *SYSMAC LINK Support Board Operation Manual* (W390) for information on these FINS commands.

Command code		Data links		Name
		Active	Stopped	
04	01	No	OK	RUN
	02	OK	No	STOP
05	01	OK	OK	CONTROLLER DATA READ
06	01	OK	OK	CONTROLLER STATUS READ
	02	OK	OK	NETWORK STATUS READ
	03	OK	OK	DATA LINK STATUS READ

Command code		Data links		Name
		Active	Stopped	
08	01	OK	OK	LOOPBACK TEST
	02	OK	OK	BROADCAST TEST RESULTS READ
	03	OK	OK	BROADCAST TEST DATA SEND
21	02	OK	OK	ERROR LOG READ
	03	OK	OK	ERROR LOG CLEAR

SECTION 10
BUSCS1_UNIT (CS1 Bus Connection Network Provider)

This section describes the BUSCS1_UNIT CS1 Bus connection network provider (NP).

10-1 BUSCS1_UNIT Functions: Connecting to the PLC 152
10-1-1 BUSCS1_UNIT (CS1 Bus Connection NP) Functions 152
10-1-2 System Setting Precautions. 154
10-2 BUSCS1 Hardware Settings 154
10-3 CS1 Settings 155
10-3-1 Creating I/O Tables. 155
10-3-2 Routing Table Settings 155
10-4 BUSCS1 Settings 156
10-4-1 Startup Services 156
10-4-2 BUSCS1 156
10-4-3 BUSCS1 UNIT 157
10-4-4 BUSCS1 Mapping 158
10-5 BUSCS1_UNIT Status Area 159
10-6 FINS Commands Addressed to BUSCS1_UNIT 159
10-6-1 CONTROLLER DATA READ: 05 01 159
10-7 FINS Commands Addressed to the CPU Bus Unit. 160
10-7-1 List of FINS Commands. 160
10-7-2 CONTROLLER DATA READ: 05 01 160
10-7-3 ERROR LOG READ: 21 02. 160
10-7-4 Error Log Clear: 21 03 162

10-1 BUSCS1_UNIT Functions: Connecting to the PLC

If an ITBC-CST01 CS1 Bus Interface Board is mounted in the Open Network Controller, the Controller can then be connected to the CS1 PLC's CPU Rack or Expansion CPU Rack, as shown in the following diagram. The Open Network Controller functions like a CPU Bus Unit for the CS1 PLC, allowing it to perform I/O communications with the PLC.

Examples of Connection to a CPU Rack and an Expansion CPU Rack

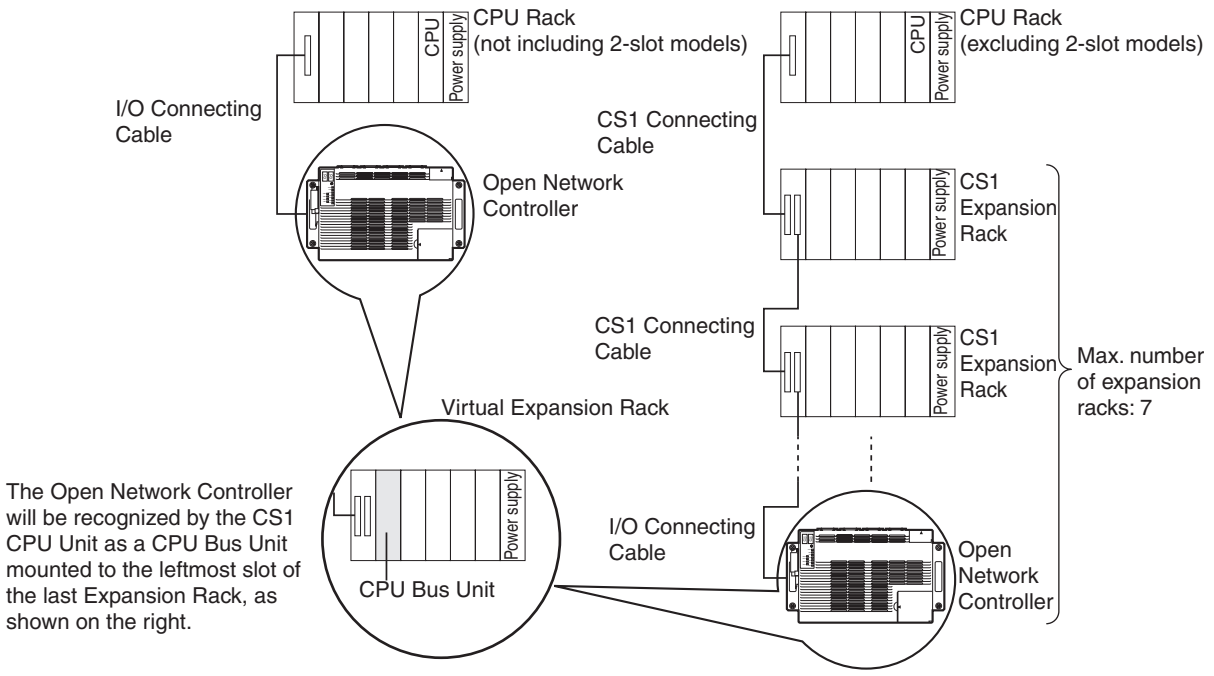

Note

1. When connecting the Open Network Controller to an Expansion Rack, connect it to the terminal Expansion CPU Rack.
2. The Open Network Controller is treated as a single Expansion CPU Rack, Therefore, the maximum number of Expansion Racks that can be connected must be reduced by one.
3. The total cable length (including I/O Connecting Cable) is 12 m max.
4. The C200H Backplane cannot be used in a configuration that includes an Open Network Controller.

10-1-1 BUSCS1_UNIT (CS1 Bus Connection NP) Functions

BUSCS1_UNIT is a software component that enables FINS communications and I/O communications (CS1 Bus connection) between a CS1 CPU Unit and Open Network Controller through a CS1 Bus Interface Board. The BUSCS1_UNIT and the CPU Bus Unit function as separate nodes on the FINS network. The default node addresses are node 1 for BUSCS1_UNIT and node 2 for CPU Bus Unit (CS1 side).

For example, when the FINS network (broken line in following diagram) is network 4, the CS1 CPU Unit can send FINS communications to the Open Network Controller at node 1 on network 4.

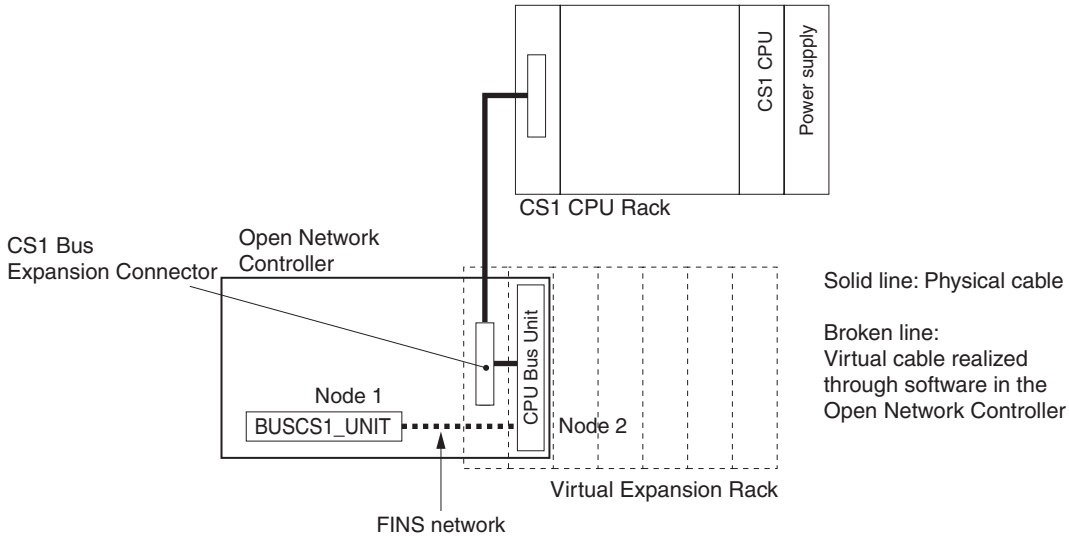

Note BUSCS1_UNIT and the CPU Bus Unit in the Open Network Controller are actually realized using BUSCS1_UNIT (CS1 Bus Connection NP).

Allocating Event Memory

By allocating I/O words in event memory to the CS1 CPU Unit (abbreviated as CS1), data can be sent and received (I/O communications) between the CS1 CPU Unit and the Open Network Controller. The area and size can be set as follows:

- 20 input words (writes contents of CS1 memory to the Open Network Controller event memory)
- 20 output words (outputs the words written in the Open Network Controller event memory to the PLC memory)
- The maximum size of the memory that can be allocated is 7,784 words.

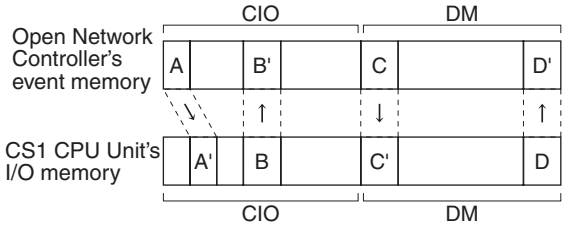

FINS Commands Addressed to BUSCS1_UNIT and CPU Bus Unit

The FINS commands used by BUSCS1_UNIT and CPU Bus Units are different. For details, refer to *10-6 FINS Commands Addressed to BUSCS1_UNIT* and *10-7 FINS Commands Addressed to the CPU Bus Unit*.

■ FINS Commands Addressed to BUSCS1_UNIT

The following FINS command can be addressed to BUSCS1_UNIT.

Command code	Name
05 01	CONTROLLER DATA READ

■ FINS Commands Addressed to CPU Bus Units

The following FINS commands can be addressed to CPU Bus Units.

Command code	Name
05 01	CONTROLLER DATA READ
21 02	ERROR LOG READ
21 03	ERROR LOG CLEAR

10-1-2 System Setting Precautions

Even if the PLC power is ON, the PLC will not operate unless the initial processing of the Open Network Controller (the CS1 Bus Interface Board mounted in the Open Network Controller) is completed. The Open Network Controller requires about 25 seconds to start after the power has been turned ON. Consider the Open Network Controller and PLC startup times when designing the system.

If the Open Network Controller power is turned OFF while the PLC power is ON, an I/O bus error will occur at the PLC. Consider this factor when designing the system.

10-2 BUSCS1 Hardware Settings

An ITBC-CST01 CS1 Bus Interface Board must be mounted in the Open Network Controller to enable connection to the CS1 PLC's CPU Rack or Expansion CPU Rack.

For details on installation methods, refer to *3-3 Mounting Expansion Boards.*

I/O Connecting Cable

Use any of the following I/O Connecting Cables to connect the CS1 Bus Interface Board and CS1 CPU Rack or Expansion Rack.

Model	Length
ITBC-CN001-CST	1 m
ITBC-CN005-CST	5 m
ITBC-CN012-CST	12 m

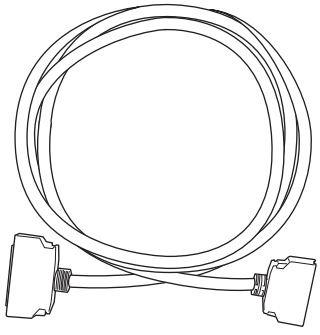

Note

1. Turn OFF the power to the CS1 CPU Unit and personal computer before connecting the I/O Connecting Cables.
2. Connect the smaller connector (50 pins) of the I/O Connecting Cable to the CS1 bus interface connector of the CS1 Bus Interface Board.
3. Connect the larger connector (68 pins) of the I/O Connecting Cable to the expansion connector on the CS1 CPU Unit's CPU Rack or Expansion Rack.
4. When connecting the CS1 Bus Interface Board to the CS1 Expansion Rack, use the connector on the output side of the terminal CS1 Expansion Rack.

For further details, refer to the *CS1 Bus Interface Board Operation Manual* (V211).

10-3 CS1 Settings

The methods used by the CS1 for setting software are described here. The setting tools used to perform settings are shown in the following table.

Setting details	Setting tool
Creating I/O tables	CX-Programmer
Setting routing tables	PLC Network Configuration Tool (CX-Net)

Note
1. Routing tables are not required if FINS communications are not used (CS1 bus I/O communications are used only).
2. In addition to the CS1 CPU Unit settings shown here, the Open Network Controller (BUSCS1 settings) must also be set. For details on BUSCS1 settings, refer to *10-4 BUSCS1 Settings*.

The procedure for making CS1 I/O table settings and routing table settings using CX-Programmer and CX-Net (PLC Network Configuration Tool) is described next.

10-3-1 Creating I/O Tables

Use the following procedure to set the CS1 I/O tables with the CX-Programmer.

Note
1. Before creating the I/O tables with the CX-Programmer, refer to *10-2 BUSCS1 Hardware Settings* and connect the Open Network Controller and the CS1 through the CS1 bus and turn ON the Open Network Controller and the CS1, or otherwise the I/O table cannot be created.
2. The Open Network Controller will detect an error (0043) unless the I/O tables are created. Refer to *19-2 Error Messages*for details.

1,2,3...
1. Connect the Open Network Controller and CS1 through the CS1 bus (refer to *10-2 BUSCS1 Hardware Settings)* and turn ON the Open Network Controller and the CS1.
2. Connect the CX-Programmer and the CS1 online.
3. Select ***PLC***, ***Operation Mode***, and ***Program*** in the CX-Programmer. The PLC will be set to PROGRAM mode. This step is not necessary if the PLC has been already set to PROGRAM mode.
4. Select ***PLC***, ***Edit***, and ***I/O Table*** (or double-click ***I/O Table*** in the project work space).

   The I/O Table Window will be displayed then. This I/O table has already been saved in the hard disk of the personal computer.
5. Select ***Options*** and ***Create*** in the I/O Table Window.

   Data on the actual I/O tables (i.e., data on the Units actually connected to the CS1) will be copied to the registered I/O table in the CS1.

10-3-2 Routing Table Settings

Use the CX-Net (PLC Network Configuration Tool) to set the routing tables to be registered in the CS1. Set the local network table of the Open Network Controller (as a CPU Bus Unit) in the routing tables together with the relay network table, if necessary.

Refer to the *CX-Programmer Operation Manual* for information on how to use the CX-Net. Pay attention to the following points when using the CX-Net.

Note
1. The routing tables are not required if no FINS communications are made (using I/O communications with CS1 bus only).

2. When the routing tables are transferred from the CX-Net to the CPU Unit, the CPU Bus Unit will be reset. This will enable the CPU Bus Unit to validate the routing tables after they have been read. Before transferring the routing tables, check that the system will not cause any problems when the CPU Bus Unit is reset.
3. Check that the local network number set in the routing tables is set to the same value as the network number for the Open Network Controller's BUSCS1_UNIT. Refer to *4-6 Setting IP Addresses* for details on local network number settings. Refer to *10-4 BUSCS1 Settings* for details on setting the BUSCS1_UNIT network number.

10-4 BUSCS1 Settings

The BUSCS1_UNIT startup service settings, network number, and node number must be set.

10-4-1 Startup Services

The BUSCS1_UNIT service must be registered.

1,2,3...

1. Select ***Startup Services*** from the Menu Window. The Startup Service Setting Window will be displayed showing the current settings.
2. Select ***BUSCS1*** in the Service Name Box and then click the **Create New** Button. The service will be registered as shown in the following window.

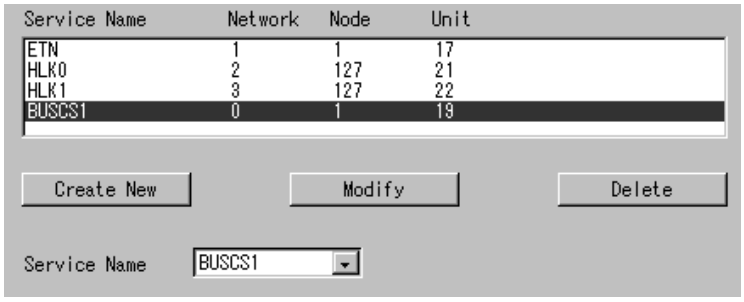

3. Click the **Write** Button.

10-4-2 BUSCS1

Use the following procedure to set the network number and node number of BUSCS1_UNIT.

Click ***BUSCS1*** in the Menu Window. The following window will be displayed showing the current settings.

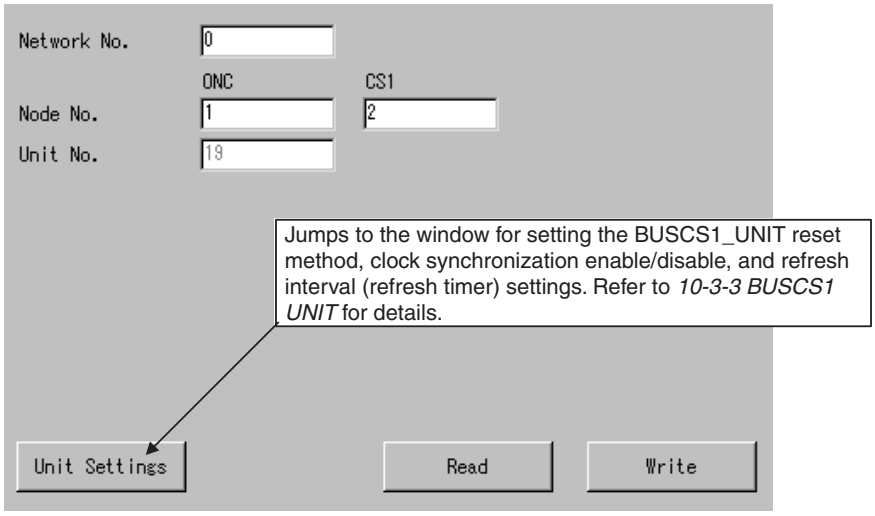

Settings

Item	Setting
Network No.	Set the network number of the BUSCS1_UNIT between 1 and 127.
Node No.	ONC: Set the node number of the ONC (BUSCS1_UNIT) between 1 and 253. BUSCS1: Set the node number of the BUSCS1 Board between 1 and 253. The BUSCS1_UNIT and BUSCS1 Board (CPU Bus Unit) are treated as separate nodes on the FINS network. Refer to *10-1 BUSCS1_UNIT Functions: Connecting to the PLC*.
Unit No.	The default unit number for the BUSCS1_UNIT is displayed. There is no reason to change the default setting.

10-4-3 BUSCS1 UNIT

The BUSCS1_UNIT reset method, clock synchronization enable/disable, and refresh interval (refresh timer) must be set.

Click ***BUSCS1 UNIT*** in the Menu Window. The following window will be displayed showing the current settings.

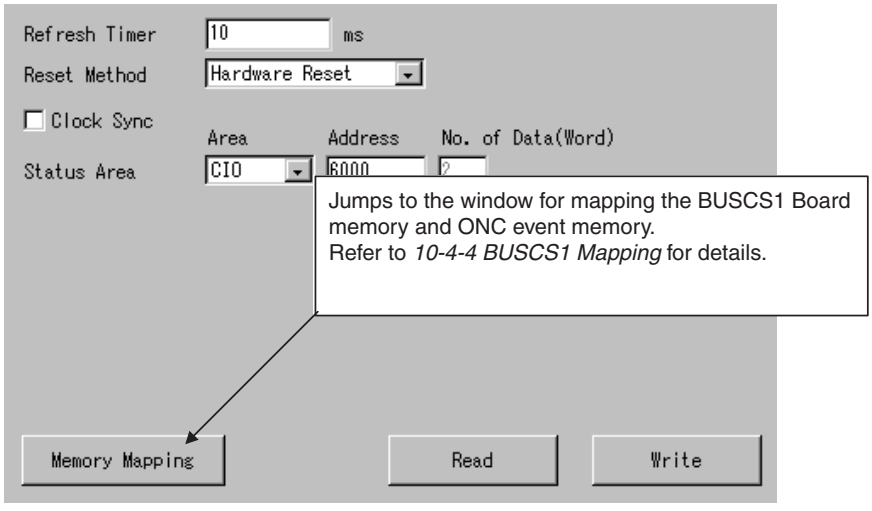

Settings

Item	Setting
Refresh Timer	Set between 1 and 9,999 ms. If the interval is set below the default value (10 ms), the load to the CPU will increase, and this will have a negative effect on overall system performance.
Reset Method	Select the reset method. The Unit can be reset by writing to CS1 bit AR501. Hardware Reset: Resets the Open Network Controller. Software Reset: Resets the BUSCS1_UNIT software only. Select *Software Reset* to reset the Board only, without resetting the Open Network Controller.
Clock Sync	Select to synchronize the CS1 clock and ONC clock when the Open Network Controller is started up. The clocks will not be synchronized if this setting is not selected.
Status Area	Set the status areas for BUSCS1_UNIT. The status areas is allocated 2 words. DM: 0 to 65,535 CIO: 0 to 8,190 SRAM: 0 to 65,212 For details on the BUSCS1_UNIT Status Area, refer to *10-5 BUSCS1_UNIT Status Area*. Set so that the same words are not allocated for other purposes in the event memory.

10-4-4 BUSCS1 Mapping

Use the following procedure to map the BUSCS1 Board memory and Open Network Controller event memory.

Click ***BUSCS1 Mapping*** in the Menu Window. The following window will be displayed showing the current settings.

Up to 40 pairings can be made. Register up to 20 pairings from the ONC to CS1-series PLC and up to 20 pairings from the CS1-series PLC to the ONC.

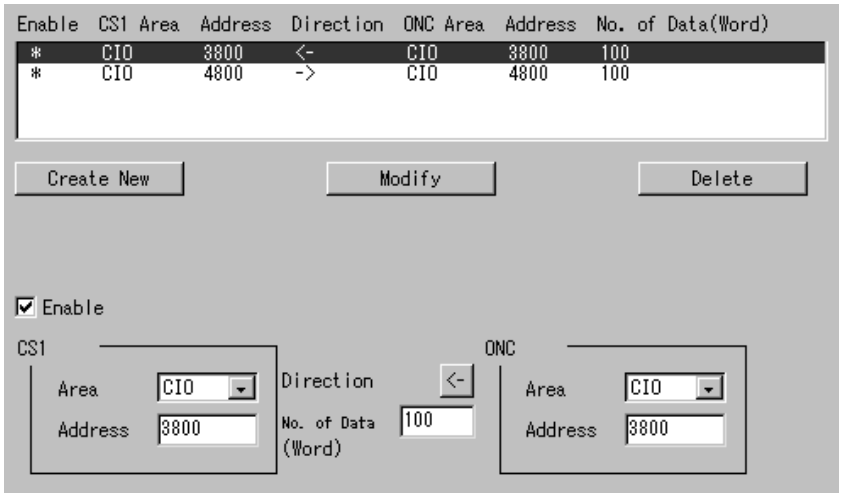

Settings

Item	Setting
Enable	Set to enable or disable the mapping settings. Selected: Enable (An asterisk (*) is displayed.) Deselected: Disable (The asterisk (*) is cleared.)
CS1 Area	Set the CS1 memory areas. Area: CIO or DM Address: Specify the word.
Direction	Set the transfer direction. The button toggles between the two transfer directions each time it is clicked.
No. of Data (Word)	Set the transfer size in words. The maximum number of words from the Board area or ONC area that can be transferred must be within the size of the smaller area size. The maximum size that can be set is 7,784 words.
ONC Area	Set the ONC event memory. Area: CIO or DM Address: Specify the word.

10-5 BUSCS1_UNIT Status Area

The following table shows the BUSCS1 Status Area display.

Bit	15	14	13	12	11	10	9	8	7	6	5	4	3	2	1	0
+0	---	---	---	---	---	---	---	---	---	---	1.	2.	3.	4.	15.	---
+1	5.	6.	7.	8.	9.	10.	---	---	---	---	---	---	11.	12.	13.	14.

1. CHAIN: Changes to 1 when a break in the expansion cable occurs.
2. SPFU: Changes to 1 when the primary power is disconnected.
3. BUSER: Changes to 1 when a CS1 bus error occurs (Unit missing).
4. SWDTU: Changes to 1 when a watchdog timer error occurs in the CS1 CPU Unit.
5. Fatal error: 1 during error.
6. Non-fatal error: 1 during error.
7. RUN/Initializing: 1: Starts operations from next cycle.
8. RUN status: 1: Running ladder program.
9. CPU standby: 1: CPU on standby.
10. Output OFF: 1: Output OFF Bit (AR50015) is ON.
11. RUN: Changes to 1 when in RUN mode.
12. MONITOR: Changes to 1 when in MONITOR mode.
13. DEBUG: Changes to 1 when in DEBUG mode.
14. PROGRAM: Changes to 1 when in PROGRAM mode.
15. Restart notification: Changes to 1to notify Unit restarting from PLC.

The other bits are not used and can be masked.

When the errors from items 1. to 4. above occur, the CS1 bus service cannot be used. Therefore, the data in items 5. to 15. above is disabled.

10-6 FINS Commands Addressed to BUSCS1_UNIT

10-6-1 CONTROLLER DATA READ: 05 01

Reads the model and version from the BUSCS1_UNIT running on the Open Network Controller.

Command Format

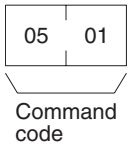

Response Format

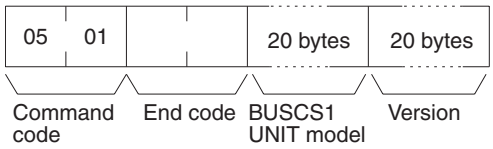

Parameters

BUSCS1_UNIT model and version (response)

The BUSCS1_UNIT model and version are returned using up to 20 bytes of ASCII (ASCII characters). If the full 20 bytes are not used, spaces (ASCII 20) will be inserted to fill the remainder.

Note For details on using the FINS commands that can be addressed to the CPU Bus Unit, refer to *10-7 FINS Commands Addressed to the CPU Bus Unit*.

10-7 FINS Commands Addressed to the CPU Bus Unit

This section describes the FINS commands that can be addressed to the CPU Bus Unit.

10-7-1 List of FINS Commands

The following FINS commands can be addressed to the CPU Bus Unit.

Command code	Name
05 01	CONTROLLER DATA READ
21 02	ERROR LOG READ
21 03	ERROR LOG CLEAR

10-7-2 CONTROLLER DATA READ: 05 01

Reads the model and version from the CPU Bus Unit.

Command Format

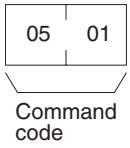

Response Format

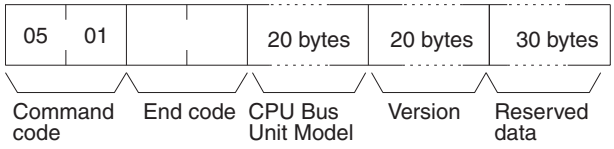

Precautions

The BUSCS1_UNIT model and version are returned using up to 20 bytes of ASCII (ASCII characters). If the full 20 bytes are not used, spaces (ASCII 20) will be inserted to fill the remainder.

10-7-3 ERROR LOG READ: 21 02

Reads the error log of the CPU Bus Unit. The records read will be deleted from the error log.

Command Format

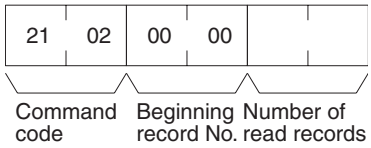

Response Format

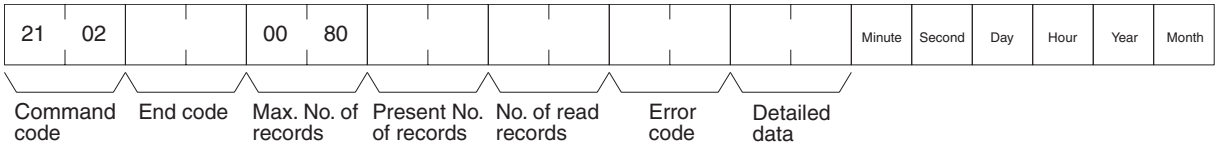

Parameters

Beginning record No. (command)

Always 0000.

No. of read records (command)

Specify the number of records up to 128 (80 Hex). If the specified number exceeds the actual number of errors in the error log, all the error log will be read in a normal response format.

Max. No. of records (response)

Always 0080 (128 records).

Present No. of records (response)

The number of records remaining after the command is executed will be returned. When the number of read records is set to 0, the present number of records will be returned so that the user can check the number of records remaining in the error log.

No. of read records (response)

The number of records actually read will be returned.

Error code and detailed data (response)

Data on the error log is returned. If there is no detailed data, 0000 will be returned. Refer to the following *Error Log Error Codes* for details.

Minute, second, day, hour, year, and month (response)

Based on the time data of the Open Network Controller, the time of each error occurred will be stored in BCD.

Error Log Error Codes

Error code	Detailed data	Meaning	Probable cause	Possible correction or Open Network Controller response
01 18	0000	The FINS response exceeded 2,000 bytes.	---	The packet will be discarded.
01 18	0001	The FINS response exceeded 2,000 bytes.	---	The packet will be discarded.
00 0f	0000	The access right to the cyclic area could not be obtained.	The access right is not released by another CPU Bus Unit.	Check the CPU Bus Unit.
00 06	0800	The CS1's I/O tables were not registered.		Register the I/O tables.
02 1a	0003	The CS1's routing tables could not be used.	The routing table is missing or has a parameter error.	Create the routing tables correctly.
01 12	0000	The FINS response received was addressed to the local unit.	The FINS response was wrongly addressed.	The packet will be discarded.
01 0b	0000	The service was not possible due to an error in the CS1.	---	The packet will be discarded.

Error code	Detailed data	Meaning	Probable cause	Possible correction or Open Network Controller response
01 0e	0000	No transmission was possible because the CS1 had no routing tables.	---	The packet will be discarded.
01 10	0000	The number of gateways exceeded the limit.	---	The packet will be discarded.
01 08	0000	The CS1 had a routing error.	No corresponding unit existed.	The packet will be discarded.
01 0d	0000	The CS1 had a routing error.	A routing error resulted.	The packet will be discarded.
01 0e	0000	The CS1 had a routing error.	The routing table has not been registered.	The packet will be discarded.
01 24	0000	The CS1 had a routing error.	The data exceeded the event area size.	The packet will be discarded.
01 20	0000	No transmission was possible because the CS1 had no routing tables.	---	The packet will be discarded.

10-7-4 Error Log Clear: 21 03

Clears the error log of the CPU Bus Unit.

Command Format

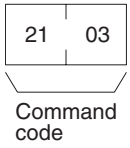

Response Format

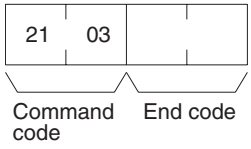

SECTION 11
DRM_UNIT (DeviceNet Network Provider)

This section describes the DRM_UNIT DeviceNet network provider (NP).

11-1 DRM_UNIT Functions 164
11-1-1 DeviceNet Communications Methods 164
11-1-2 Allocating Event Memory 164
11-1-3 Explicit Messages 165
11-1-4 FINS Commands Addressed to DRM_UNIT 165
11-1-5 Precautions 165
11-2 DRM_UNIT Hardware Settings 165
11-3 DRM_UNIT Settings 166
11-3-1 Setting Startup Services 166
11-3-2 DRM (DeviceNet) 166
11-3-3 DRM UNIT 167
11-3-4 DRM Mapping (Master) 168
11-3-5 DRM Mapping (Slave) 169
11-3-6 Scanlist File 170
11-4 DeviceNet Status Area 173
11-4-1 DeviceNet Status Area Display 173
11-4-2 Network Status (Word Offset: 0) 174
11-4-3 Baud Rate (Word Offset: 1) 174
11-4-4 Scanner Status 1 (Word Offset: 2) 174
11-4-5 Scanner Status 2 (Word Offset: 3) 176
11-4-6 Scanner Status 3 (Word Offset: 4) 176
11-4-7 Scanner Status 4 (Word Offset: 4) 176
11-4-8 Master Status 1 (Word Offset: 5) 177
11-4-9 Slave Status 1 (Word Offset: 8) 177
11-4-10 Slave Status 2 (Word Offset: 9) 178
11-4-11 Registered Slave Table (Word Offset: 10) 178
11-4-12 Normal Slave Table (Word Offset: 18) 178
11-4-13 Slave Status (Word Offset: 22) 179
11-4-14 Communications Cycle Time Present Value (Word Offset: 87) 180
11-4-15 Communications Cycle Time Maximum Value (Word Offset: 88) . 180
11-4-16 Communications Cycle Time Minimum Value (Word Offset: 89) . . 180
11-5 FINS Commands Addressed to DRM_UNIT 180
11-5-1 RUN: 04 01 181
11-5-2 STOP: 04 02 181
11-5-3 RESET: 04 03 182
11-5-4 CONTROLLER DATA READ: 05 01 182
11-5-5 LOOPBACK TEST: 08 01 182
11-5-6 EXPLICIT MESSAGE SEND: 28 01 183

11-1 DRM_UNIT Functions

The DRM_UNIT is a software component that functions like a Communications Unit to connect to a DeviceNet network. The DeviceNet can function as either a slave or a master from Open Network Controller version 2.

11-1-1 DeviceNet Communications Methods

Any of the following three methods can be used to communicate through an Open Network Controller between personal computers or other devices on an Ethernet network and devices on the DeviceNet network.

- Allocate DeviceNet remote I/O data to event memory and read/write event memory.
- Send/receive FINS messages to/from devices on the DeviceNet network (only for devices that support FINS). (Not all devices support FINS communications functions with Open Network Controllers (e.g., C200HX/HE/HG and C200HS PLCs).
- Send explicit messages to devices on the DeviceNet network.

11-1-2 Allocating Event Memory

■ **Master Function**

When the Master functions are used, if DeviceNet remote I/O is allocated in event memory, personal computers and other devices on an Ethernet network can access remote I/O data by reading/writing event memory.

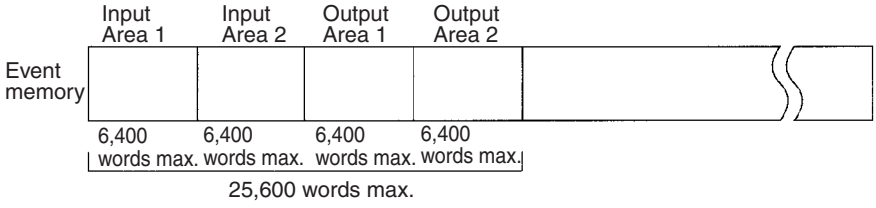

Up to two input areas and two outputs areas can be allocated in event memory. Each area can contain up to 6,400 words, for a maximum of 12,800 input words and 12,800 output words.

Allocations can be made for a maximum of 63 nodes and up to 100 words (200 bytes) can be allocated per node in each area.

Allocated words are refreshed periodically and the refresh interval can be specified in increments of 1 ms. (The refresh interval must be longer than the actual communications cycle time. The communications cycle time can be checked in the Status Area.)

These data words are allocated using the Setting Tool. A separate Status Area of 90 words can also be allocated. For details on the Status Area, refer to *11-4 DeviceNet Status Area*.

■ **Slave Function**

If the Open Network Controller is used as a Slave, the DeviceNet Master (e.g., a PLC) will read and write I/O data from the Slave. For the Open Network Controller, the I/O data is allocated in event memory.

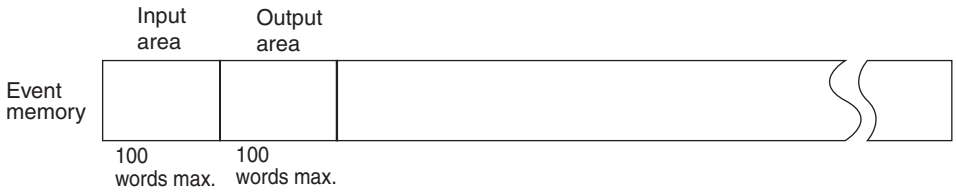

Up to 100 words each can be allocated in event memory for an input area and an output area. The words are allocated using a Setting Tool. There are two modes that can be used for allocation: Using all of the set input and output areas as the Slave I/O data and using the DeviceNet Configurator to use specified sizes of the input and output areas.

11-1-3 Explicit Messages

FINS command code 28 01 can be used to send explicit messages to devices on the DeviceNet network. This function enables communications with the master and slaves on the DeviceNet network. The Open Network Controller converts explicit messages returned from the DeviceNet devices to FINS responses. This function can be used to read maintenance information from DRT2-series Smart Slaves.

11-1-4 FINS Commands Addressed to DRM_UNIT

The following FINS commands can be addressed to DRM_UNIT.

Command code	Name
04 01	RUN
04 02	STOP
04 03	RESET
05 01	CONTROLLER DATA READ
08 01	LOOPBACK TEST
28 01	EXPLICIT MESSAGE SEND

11-1-5 Precautions

I/O areas and the Status Area must be set so that they do not use words allocated for other purposes.

The longest FINS message beginning with ICF that is exchanged between DeviceNet networks using Open Network Controllers has 552 bytes.

Note When Master mode is used, the RUN indicator will fail to light if DRM_UNIT is started without any Slaves connected. No error will be output. If DIP switch 2, pin 3, is turned ON, the DeviceNet error code will be output to the 7-segment display. For details on error codes, refer to *19-3 DeviceNet Indicator Displays*.

11-2 DRM_UNIT Hardware Settings

DeviceNet communications cable must be connected to the Open Network Controller to enable connection to DeviceNet.

For details on cable connection methods, refer to *3-7 Connecting DeviceNet Cables*.

11-3 DRM_UNIT Settings

The DRM_UNIT startup service settings, network number and node number, DRM_UNIT driver, and DRM memory allocation and other DRM settings must be set.

11-3-1 Setting Startup Services

The DRM_UNIT service must be registered.

1,2,3...

1. Select ***Startup Services*** from the Menu Window. The Startup Service Setting Window will be displayed showing the current settings.
2. Select ***DRM0*** in the Service Name Box and then click the **Create New** Button. The service will be registered as shown in the following window.

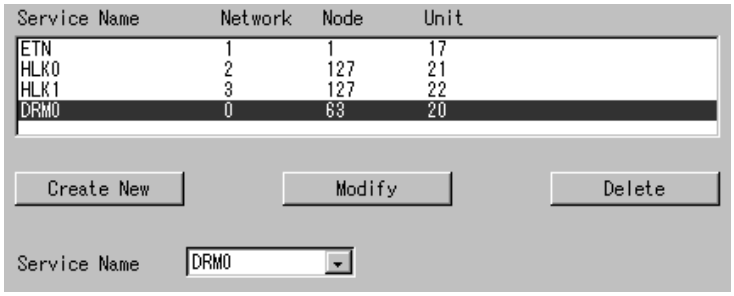

3. Click the **Write** Button.

11-3-2 DRM (DeviceNet)

Use the following procedure to set the network number and node number of DRM_UNIT.

Click ***DRM (DeviceNet)*** in the Menu Window. The following window will be displayed showing the current settings.

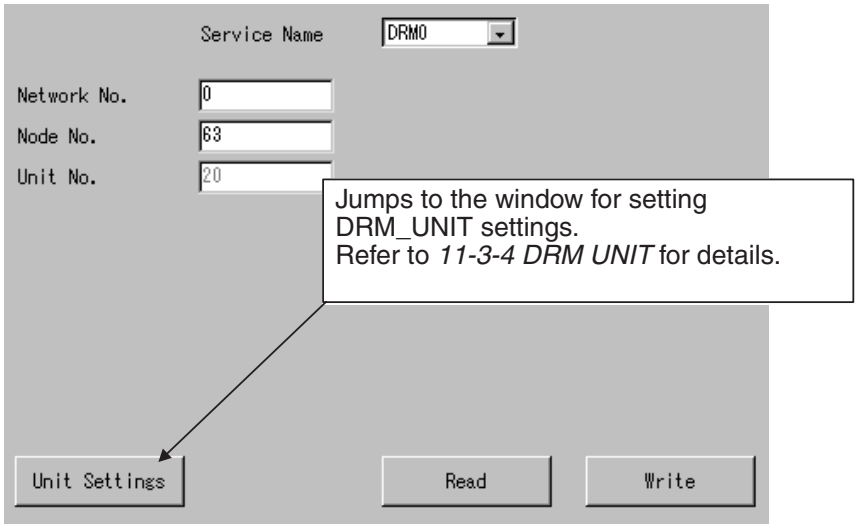

Settings

Item	Setting
Service Name	Select the service name to be set or displayed. (DRM0 or DRM1)
Network No.	Set the network number (1 to 127) of the DRM□.
Node No.	Set the node number (1 to 63) of the DRM□. This value will become the local node's MAC ID.
Unit No.	The default unit number for the DRM□ is displayed. There is no reason to change the default setting.

11-3-3 DRM UNIT

The DRM_UNIT settings such as baud rate, and DeviceNet scan mode when the power is ON must be set.

Click ***DRM UNIT*** in the Menu Window. The following window will be displayed showing the current settings.

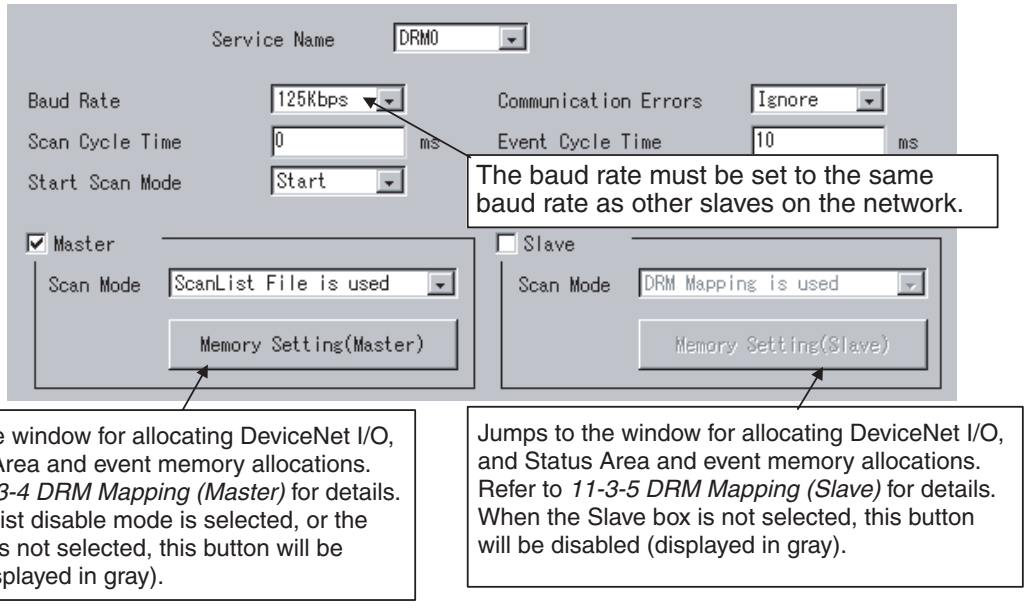

Settings

Item	Setting
Service Name	Select the service name to be set or displayed. (DRM0 or DRM1)
Baud Rate	Set the DeviceNet baud rate to 125 kbps, 250 kbps, or 500 kbps.
Scan Cycle Time	Set the time to scan all nodes on the DeviceNet. When 0 is specified, the DeviceNet scan cycle time is set to the fastest time possible. When using a time setting, set between 0 and 500 ms. The execution time is read in the Status Area's fifth word (present value), sixth word (maximum value), and seventh word (minimum value). The unit is ms.
Start Scan Mode	Set the DeviceNet's scan mode at startup. Start: Scan at startup. Stop: Do not scan at startup.
Communication Errors	Set the operation when a DeviceNet communications error occurs. Ignore: Continue communications with nodes operating normally. Stop: Stop scanning.
Event Cycle Time	Set the data refresh interval for event memory between 1 and 10,000 ms. Set the value to the present value for the scan cycle time or higher. If the interval is set below the default value (10 ms), the load to the CPU will increase, and this will have a negative effect on overall system performance
Master	To use the DRM_UNIT Master function, select the ***Master*** option and then select the scan mode. ScanList File is used: Operates with the scan list set using the Setting Tool. Configuration Mode: The words set from the Configurator are allocated in order of nodes with no spaced (i.e., unallocated words) in between. ScanList is not used: A total of 6,400 words, consisting of 100 words per node in input area 1 and output area 1 for 64 nodes, are automatically allocated. Precautions When Scan List Is Disabled: The event cycle time is automatically set to 50 ms. Do not use any time less than 50 ms. If the mode is changed to another mode, change the event cycle time to the default value (10 ms). The words allocated to memory are automatically set to DM 0 and DM 6400 in the input area and DM 6400 and DM 6400 in the output area. The area size is always 6,400 words. Do not set any other value. The size of input/output area 2 is 0 words.
Slave	To use the DRM_UNIT slave function, select the ***Slave*** option and then select the scan mode. DRM Mapping is used: Operates with the contents set using the Setting Tool. Configuration Mode: Of the mapped areas, operates with the sizes set using the Configurator. The area mappings are set with ***DRM Mapping (Slave).***

11-3-4 DRM Mapping (Master)

Use the following procedure to allocate the DeviceNet Master I/O, and Status Area in the event memory.

Click ***DRM Mapping (Master)*** in the Menu Window. The following window will be displayed showing the current settings.

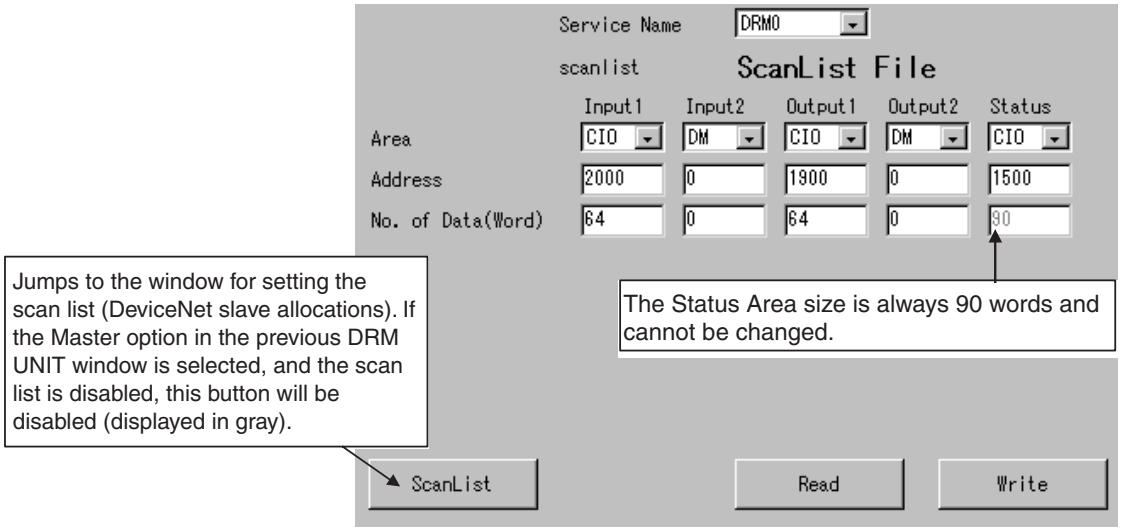

Settings

Set the area name (DM, CIO, and SRAM), address (first word), and number of words (0 to 6,400 words) for each of the following areas allocated in event memory.

Item	Setting
Service Name	Select the service name. (DRM0 or DRM1)
Input 1	Specify the area in event memory allocated for DeviceNet input.
Input 2	Specify the second area in event memory allocated for DeviceNet input.
Output 1	Specify the area in event memory allocated for DeviceNet output.
Output 2	Specify the second area in event memory allocated for DeviceNet output.
Status	Set the DeviceNet Status Area. For details on the Status Area, refer to *11-4 DeviceNet Status Area.* The Status Area size is always 90 words. Do not allocate words in event memory that have already been allocated for other purposes.

11-3-5 DRM Mapping (Slave)

Use the following procedure to allocate the DeviceNet slave I/O in the event memory.

Click ***DRM Mapping (Slave)*** in the Menu Window. The following window will be displayed showing the current settings.

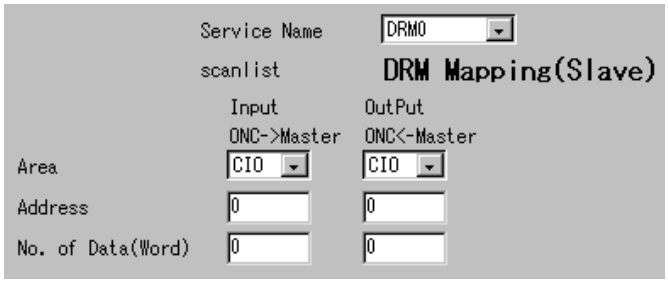

Settings

Set the area name (DM and CIO), address (first word), and number of words (between 0 and 100 words) for each of the following I/O areas allocated in event memory.

Item	Setting
Service Name	Select the service name. (DRM0 or DRM1)
Input	Specify the area in event memory allocated for DeviceNet input.
Output	Specify the area in event memory allocated for DeviceNet output.

Note If the scan list is set to use ***DRM Mapping (Slave)***, All of the words set above will function as slave words. If the scan list is set to use the configurator, the sizes set from the Configurator of the mapped words (i.e., the words set in the windows shown above) will be used as the slave words.

11-3-6 Scanlist File

Use the following procedure to set the scan list (DeviceNet slave allocations).

Click ***ScanList File*** in the Menu Window. The following window will be displayed showing the current settings.

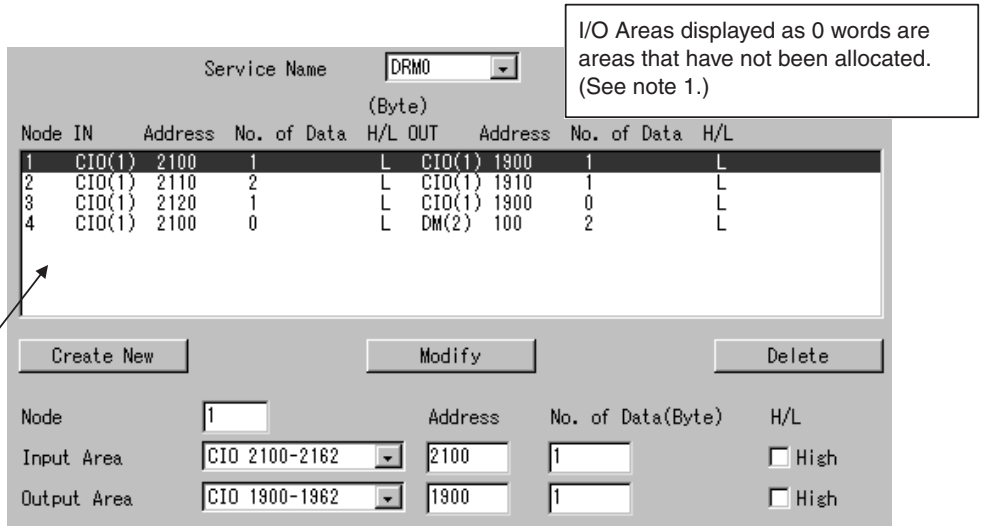

The meanings of the settings in this example are as follows:

Node 1 is allocated the lowest byte of the first word CIO 2100 in Input Area 1, and the lowest byte of the first word CIO 1900 in Output Area 1.

Node 2 is allocated two bytes from CIO 2110 in Input Area 1 and the lowest byte of the first word CIO 1910 in Output Area 1.

Node 3 is allocated the lowest byte of the first word of CIO 2120. An Output Area is not allocated. (See note 1.)

Node 4 is allocated two bytes from DM 100 of Output Area 2. An Input Area is not allocated. (See note 1.)

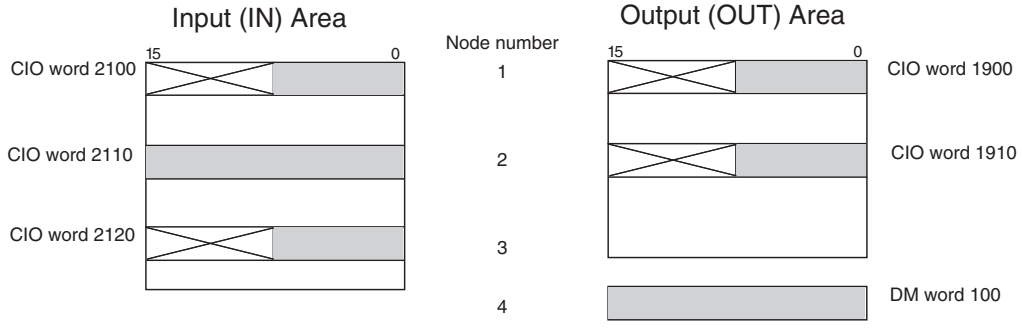

Note Refer to the information under *Setting Precautions* on the following page.

Settings

Item	Setting
Service Name	Select the service name. (DRM0 or DRM1)
Node	Input the MAC ID. For DeviceNet, the MAC ID is the same as the FINS node number.
Input Area	Select the Input Area set under the DRM Mapping settings and then make the following settings. Address: From the selected Input Area, set the first word of the area where inputs will be allocated to the specified node. Check that the actual word address is specified and not the offset. No. of Data (Byte): Set the input size in bytes. H/L: Set whether the byte of the first word set above is the upper or lower byte (leftmost/rightmost byte). Selected: Lower (rightmost) (bits 0 to 7) Deselected: Higher (leftmost (bits 8 to 15)
Output Area	Select the Output Area set under the DRM Mapping settings and then make the following settings. Address: From the selected Output Area, set the first word of the area where outputs will be allocated to the specified node. Check that the actual word address is specified and not the offset. No. of Data (Byte): Set the output size in bytes. H/L: Set whether the byte of the first word set above is upper or lower byte (leftmost/rightmost byte). Selected: Lower (rightmost) (bits 0 to 7) Deselected: Higher (leftmost) (bits 8 to 15)

Note

1. When directly editing the file /etc/FgwQnx/scanlist.ini, do not set the first word of the I/O Area as an offset in bytes. With this software, the word must be set, and not the offset.
2. Select the H/L option when using slaves that are 8-bit slaves only. The default is lower (rightmost) byte.
3. When a MULTIPLE I/O TERMINAL is used, the Communications Unit is allocated 4 input bytes for sending I/O Unit interface status information to the Master. Consider this allocation when setting the scan list.
4. When using explicit messages, allocate both input and output as 0 bytes.

Setting Precautions

When either the Input Area or Output Area is not allocated, set the allocation of the Input Area not to be used, as shown in the following example.

In this example, node 3 is allocated for input (first word CIO 2020, lower byte) only, and node 4 is set for output (two bytes from DM 100) only.

```
3    CIO(1) 2120      1          L   CIO(1) 1900      0          L
4    CIO(1) 2100      0          L   DM(2)  100       2          L
```

Note Always set the unused areas, as shown in the following setting examples. If these areas are not set, an error will occur when the Write Button is clicked, and the settings will not be saved.

- Node 3 Settings

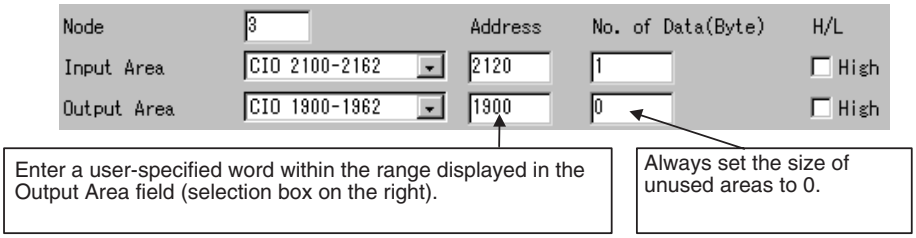

- Node 4 Settings

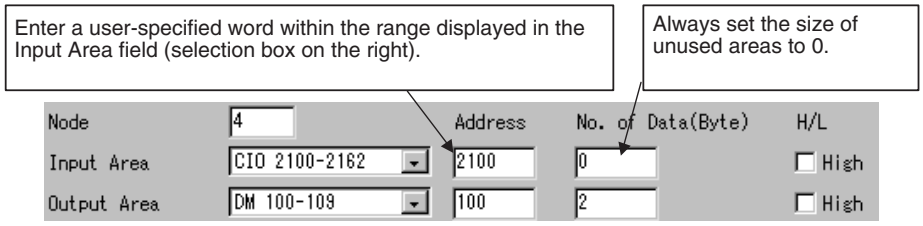

11-4 DeviceNet Status Area

11-4-1 DeviceNet Status Area Display

The Status Area display is described here. The Status Area is configured of 90 words as shown in the following table.

Event memory word offset	Name	Data size
0	Network status	1 word
1	Baud rate	1 word
2	Scanner status 1	1 word
3	Scanner status 2	1 word
4	Scanner status 3	1 word
	Scanner status 4	1 word
5	Master status 1	1 word
6	Reserved	2 words
8	Slave status 1	1 word
9	Slave status 2	1 word
10	Registered slave table	4 bytes
14	Reserved	4 words
18	Normal slave table	4 bytes
22	Slave status (MAC ID 0)	1 word
:	:	:
85	Slave status (MAC ID 63)	1 word
86	Reserved	1 word
87	Communications cycle time (present value)	1 word
88	Communications cycle time (maximum value)	1 word
89	Communications cycle time (minimum value)	1 word

Note The following status occurs when communications are normal.

- All scanner status 1 bits are OFF.
- Scanner status 2, bit 0 and bit 1 are both ON.

The details of the display contents are described in order next.

11-4-2 Network Status (Word Offset: 0)

Bit	Name	Meaning
0	CAN Active	ON: Active OFF: Not active
1	Network Frame Detected	ON: Receiving new frame.
2 to 7	Reserved	
8	Network Power Error	ON: Network power error has occurred (no power supply). OFF: Power is being supplied normally.
9	Send Timeout Error	Same flag as for the send timeout error in scanner status 1.
10	Receive Overwrite	ON: Receive message is being overwritten. OFF: No receive overwrite error.
11	Receive Overload Warning	ON: Error warning from receive error counter. OFF: No receive overload error.
12	Send Overload Warning	ON: Error warning from send error counter. OFF: No send overload error.
13	Passive Error	ON: Passive error from send/receive error counter. OFF: No passive error.
14	Bus OFF Error	ON: Bus OFF OFF: No bus OFF error.
15	Reserved	

ON: 1, OFF: 0

11-4-3 Baud Rate (Word Offset: 1)

Shows the baud rate used to run HCAN. The baud rate is given in Kbps (e.g., 007Dh = 250 Kbps). This setting is only enabled when the CAN Active Flag in the Network Status bits is 1.

11-4-4 Scanner Status 1 (Word Offset: 2)

Bit	Name	Meaning
0	Scanner Error	OR of following bits 1 to 15. The error has occurred in any of these bits.
1	Master Error	OR of the following flags. Master monitor status 1 Verification Error Flag Configuration Error Flag (Unsupported slave) I/O Communications Error Flag
2	Passive Monitor Error	OR of the following flags. Passive monitor status 1 I/O Communications Error Flag (OUTPUT1/INPUT1) I/O Communications Error Flag (OUTPUT2/INPUT2)
3	Slave Monitor Error	OR of the following flags. Slave monitor status 1 I/O Communications Error Flag

Bit	Name	Meaning
4	Memory Error	1: DeviceNet non-volatile memory (FROM, EEP-ROM) access (read/write) error; detected when access is attempted. 0: No memory error
5	Bus OFF Error	1: Bus OFF error This bit indicates a bus OFF of 1 s or longer. The Bus OFF Bit in the Network Status indicates the HCAN status. 0: No Bus OFF error
6	Node Number Duplication	1: Node number duplication error 0: No node number duplication error
7	Network Power Supply Error	1: Network power supply error 0: No network power supply error
8	Send Timeout Error	1: CAN send request timed out. This error occurs when no slaves are participating in the network, or when the baud rate settings are not the same. 0: No send timeout error
9 to 12	Reserved	
13	Message Monitor Timer List Data Error	1: Message monitor timer list data is abnormal (e.g., SUM mismatch, abnormal value) 0: Message monitor timer list data is normal (default when Board is reset)
14 to 15	Reserved	

11-4-5 Scanner Status 2 (Word Offset: 3)

Bit	Name	Meaning
0	Online	1: Online status 0: Offline status
1	Scan	1: Scanning 0: Not scanning The scan will stop when a scan stop request is received or when an I/O communications error or send error occurs while scanning in the mode that stops scanning when an I/O communications error occurs.
2	Passive Monitor Mode	1: Passive monitor mode enabled 0: Passive monitor mode disabled ON when passive monitor mode is enabled by the STOP_PASSIVE_MODE command. OFF after going offline for the STOP_PASSIVE_MODE command.
3	Reserved	(Master function enable/disable in the PLC)
4	Scan List Enable/disable Mode	Enabled when the Scan Flag in Scanner Status 2 is set to 1 only. 1: Scan list disabled mode 0: Scan list enabled mode
5	Slave Function Enable/Disable	1: Slave scan list is registered and the connected/disconnected setting is set to connected. 0: Slave scan list is not registered, or even if it is registered, the connected/disconnected setting is set to disconnected.
6	Automatic Slave Scan Type	Enabled when the slave scan list is registered only. 1: Slave scan type for the slave scan list is 0 (automatically set). 0: Slave scan type for the slave scan list is set to a value other than 0 (connection type is specified).
7 to 14	Reserved	
15	Error Log	1: Error log contains records. 0: No records in error log.

11-4-6 Scanner Status 3 (Word Offset: 4)

Bit	Name	Meaning
0	One Scan Completed	ON when one scan has been completed using the Master function.
1 to 7	Reserved	

11-4-7 Scanner Status 4 (Word Offset: 4)

Bit	Name	Meaning
8	Slave Output Refresh	ON when the slave function is used and output is received through any of the enabled connections.
9 to 15	Reserved	

11-4-8 Master Status 1 (Word Offset: 5)

Bit	Name	Meaning
0	Verification Error	OR of Verification Error Flag in the Slave Status of all slaves registered in the scan list.
1	Configuration Error (unsupported slave)	OR of Configuration Error Flag (unsupported slave) in the Slave Status of all devices registered in the scan list.
2	I/O Communications Error	OR of I/O Communications Error Flag in the Slave Status of all devices registered in the scan list.
3 to 14	Reserved	
15	I/O Communications in Progress	OR of I/O Communications in Progress Flag in the Slave Status of all slaves registered in the scan list.

11-4-9 Slave Status 1 (Word Offset: 8)

Enabled only when the Slave Enabled/Disabled Flag in Scanner Status 2 is set to 1.

Bit	Name	Meaning
0 to 1	Reserved	
2	I/O Communications Error (OUTPUT1/INPUT1)	1: Communications error has occurred in the I/O connection for OUTPUT1/INPUT1 that was used for normal I/O communications prior to the error. 0: No communications error in the I/O connection for OUTPUT1/INPUT1.
3	I/O Communications Error (OUTPUT2/INPUT2)	1: Communications error has occurred in the I/O connection for OUTPUT2/INPUT2 that was used for normal I/O communications prior to the error. 0: No communications error in the I/O connection for OUTPUT2/INPUT2.
4 to 11	Reserved	
12	Connection 2 Established	1: I/O connection for OUTPUT2/INPUT2 has been established normally (also ON when Master is idling). 0: Another status.
13	Connection 1 Established	1: I/O connection for OUTPUT1/INPUT1 has been established normally (also ON when Master is idling). 0: Another status.

Bit	Name	Meaning
14	I/O Communications in Progress (OUTPUT1/INPUT1)	1: Normal I/O communications in progress using the I/O connection for OUTPUT2/INPUT2 (OFF when Master is idling). 0: Abnormal I/O communications using the I/O connection for OUTPUT2/INPUT2.
15	I/O Communications Error (OUTPUT 2/INPUT 2)	1: Normal I/O communications in progress using the I/O connection for OUTPUT1/INPUT1 (OFF when Master is idling). 0: Abnormal I/O communications using the I/O connection for OUTPUT1/INPUT1.

11-4-10 Slave Status 2 (Word Offset: 9)

Shows the MAC ID of the device operating as a Master for the slave. This word is enabled only when the I/O Communications in Progress Flag (OUTPUT1/INPUT1 and/or OUTPUT2/INPUT2) in the Slave Status 1 Area is set to 1.

11-4-11 Registered Slave Table (Word Offset: 10)

Shows the devices registered as slaves in the scan list in bit map format. The following table shows the correlation in this area between the bit positions and the devices' Mac ID.

Offset	Bit 15	Bit 14	Bit 13	Bit 12	Bit 11	Bit 10	Bit 9	Bit 8	Bit 7	Bit 6	Bit 5	Bit 4	Bit 3	Bit 2	Bit 1	Bit 0
+10	15	14	13	12	11	10	9	8	7	6	5	4	3	2	1	0
+11	31	30	29	28	27	26	25	24	23	22	21	20	19	18	17	16
+12	47	46	45	44	43	42	41	40	39	38	37	36	35	34	33	32
+13	63	62	61	60	59	58	57	56	55	54	53	52	51	50	49	48

The meaning of the bit status is shown in the following table.

Bit status	Meaning
0	Not registered as a slave in the scan list.
1	Registered as a slave in the scan list.

11-4-12 Normal Slave Table (Word Offset: 18)

Shows the slaves that have a normal I/O connection enabled.

Note

1. These bits turn ON when the slave is in idle mode (when produced_connection_size is 0 at the slave, and the slave is sending a frame with an I/O data size of 0 to the master.)
2. These bits turn ON only when either of the two I/O connections is established.

The following table shows the correlation in this area between the bit positions and the device's Mac ID.

Offset	Bit 15	Bit 14	Bit 13	Bit 12	Bit 11	Bit 10	Bit 9	Bit 8	Bit 7	Bit 6	Bit 5	Bit 4	Bit 3	Bit 2	Bit 1	Bit 0
+18	15	14	13	12	11	10	9	8	7	6	5	4	3	2	1	0
+19	31	30	29	28	27	26	25	24	23	22	21	20	19	18	17	16
+20	47	46	45	44	43	42	41	40	39	38	37	36	35	34	33	32
+21	63	62	61	60	59	58	57	56	55	54	53	52	51	50	49	48

The meaning of the bit status is shown in the following table.

Bit status	Meaning
0	A normal connection has not been established.
1	A normal connection has been established.

11-4-13 Slave Status (Word Offset: 22)

These bits provide the status of the slave/passive monitor slave registered in the scan list. The bits for unregistered slaves/passive monitor slaves are disabled.

Note When scanning is performed in disabled mode, the enabled data is shown only for slaves that have a successfully established connection.

Devices Registered as Slaves

Bit	Name	Meaning
0	Error Flag	OR of bits 1, 9, and 10 of this word
1	Verification Error Flag	OR of bits 2 to 8 of this word
2	Slave Absent Flag	Enabled in scan list enabled mode only. 1: The slave is missing as an online slave on the network, or is competing with the MAC ID of the scanner specified in the GO_ON_LINE command. 0: The slave is present as an online slave on the network.
3	Vendor ID Invalid Flag	Enabled in scan list enabled mode only. 1: Registered data does not match slave. 0: Registered data matches slave.
4	Product Type Invalid Flag	Enabled in scan list enabled mode only. 1: Registered data does not match slave. 0: Registered data matches slave.
5	Product Code Invalid Flag	Enabled in scan list enabled mode only. 1: Registered data does not match slave. 0: Registered data matches slave.
6	Unsupported Connection Flag	1: Slave does not support one of the registered connections. 0: Slave supports the registered connections.
7	I/O Size Invalid Flag	1: The slave does not match one of the registered I/O sizes. 0: All registered I/O sizes match slave.
8	Connection Path Invalid Flag	1: Cannot set registered data in slave. 0: Can set registered data in slave.
9	Configuration Error Flag (unsupported slave)	1: One of the slave's I/O size exceeds the supported size (200 bytes). 0: No such error.
10	I/O Communications Error Flag	1: Timeout occurred in one of the I/O connections that was successfully established previously. 0: No such error.

Bit	Name	Meaning
11 to 14	Reserved	
15	I/O Communications in Progress Flag	1: I/O communications are operating normally for all registered connections. 0: No such error (Includes when a slave is in idle mode for any one of the registered I/O connections.) (See note 1.) Note 1: The slaves idle mode refers to when a slave sends a frame with an I/O data size of to the Master when the slave's produced_connection_size is 0.

Devices Registered as Passive Monitor Slaves

These bits are enabled only when scanning with the scan list enabled, or in passive monitor mode.

Bit	Name	Meaning
0	Error Flag	OR of the Slave Status Flag or I/O Communications Error Flag.
1	Verification Error Flag	OR of the Slave Status Flag or Slave Absent Flag.
2	Slave Absent Flag	1: Competing with MAC ID of scanner specified with the GO_ON_LINE command. 0: No such error.
3 to 9	Reserved	
10	I/O Communications Error Flag	1: Timeout at one of the I/O connections that previously started a monitor. 0: No such error.
11 to 14	Reserved	
15	I/O Communications Enabled	1: I/O communications are operating normally for all registered connections. 0: No such error.

11-4-14 Communications Cycle Time Present Value (Word Offset: 87)

These bits show the present communications cycle time in ms. These bits are enabled only when a scan is executing.

11-4-15 Communications Cycle Time Maximum Value (Word Offset: 88)

These bits show the maximum communications cycle time in ms. These bits are enabled only when a scan is executing.

11-4-16 Communications Cycle Time Minimum Value (Word Offset: 89)

These bits show the minimum communications cycle time in ms. These bits are enabled only when a scan is executing.

11-5 FINS Commands Addressed to DRM_UNIT

This section describes the FINS commands that can be addressed to DRM_UNIT. These commands are listed in the following table.

Command code	Name
04 01	RUN
04 02	STOP
04 03	RESET

Command code	Name
05 01	CONTROLLER DATA READ
08 01	LOOPBACK TEST
28 01	EXPLICIT MESSAGE SEND

Note If a command that is not supported is received by DRM_UNIT, it will return an error response with an end code of 04 01. If a timeout occurs when sending a FINS message to another node, an error response with an end code of 02 05 will be returned. If the destination is not registered in the scan list, an error response with an end code of 01 03 will be returned.

11-5-1 RUN: 04 01

Starts the scan and enables sending explicit messages.

Command Format

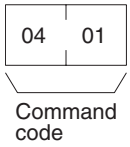

Response Format

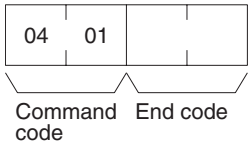

Precautions

A response will be returned when starting the scan is requested from the DeviceNet processor. Access the status data in the event memory to confirm whether or not the scan has actually started.

End code (response)

Refer to *19-1 Troubleshooting with FINS End Codes* for information on end codes.

11-5-2 STOP: 04 02

Stops the scan and disables sending explicit messages.

Command Format

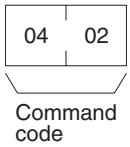

Response Format

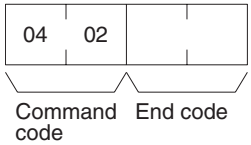

Precautions

A response will be returned when stopping the scan is requested from the DeviceNet processor. Access the status data in the event memory to confirm whether or not the scan has actually stopped.

End code (response)

Refer to *19-1 Troubleshooting with FINS End Codes* for information on end codes.

11-5-3 RESET: 04 03

Resets DeviceNet hardware.

Command Format

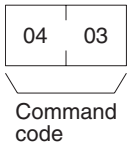

Response Format No response.

Precautions No response will be returned when the command is executed normally.

11-5-4 CONTROLLER DATA READ: 05 01

Reads the following information.

- Model
- Version

Command Format

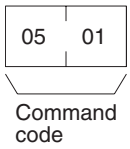

Response Format

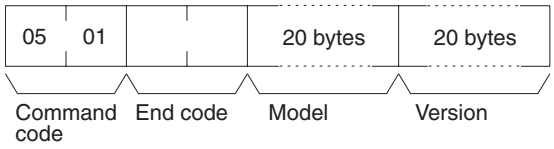

Parameters

Model and Version (response)

The DRM_UNIT model and version information is returned in not more than 20 bytes in ASCII (i.e., 20 ASCII characters). If the model or version requires less than 20 characters, spaces will be inserted to fill the remainder.

End code (response)

Refer to *19-1 Troubleshooting with FINS End Codes* for information on end codes.

11-5-5 LOOPBACK TEST: 08 01

Executes a loopback test with DRM_UNIT.

Command Format

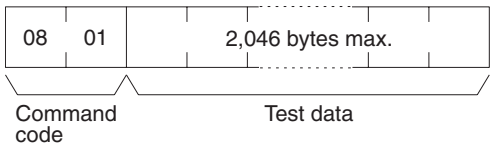

Response Format

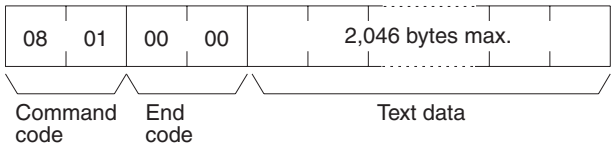

End code (response)

Refer to *19-1 Troubleshooting with FINS End Codes* for information on end codes.

Precautions

With this command, the response returns the test data sent in the command block without changes. If the test data is different, an error has occurred.

11-5-6 EXPLICIT MESSAGE SEND: 28 01

Sends an explicit DeviceNet message to the specified node. Refer to the *CompoBus/D (DeviceNet) Operation Manual* (W267) for information on explicit messages.

Command Format

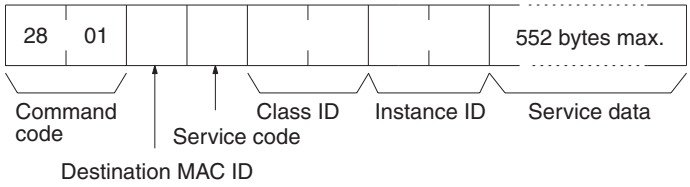

Response Format

Normal Response

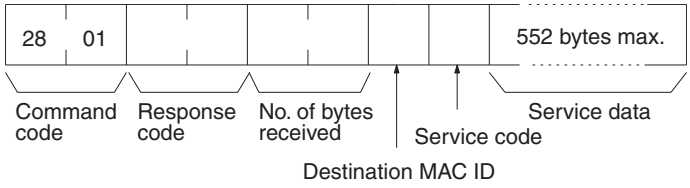

Error Responses

The following response is returned if an error occurs for the explicit message.

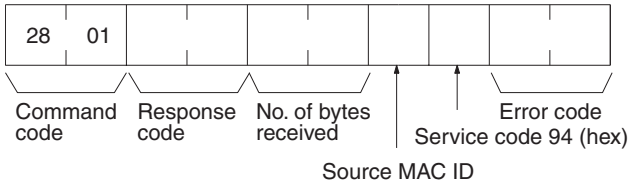

The following response is returned if the explicit message cannot be sent or times out.

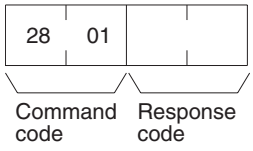

SECTION 12
HLK_UNIT (Serial Network Provider)

This section describes the HLK_UNIT serial network provider (NP).

12-1 HLK_UNIT Functions 187
12-1-1 Supported Serial Communications Protocols 187
12-1-2 Applicable FINS Commands and Applicable PLCs. 187
12-1-3 Precautions 190
12-1-4 ID Controllers and Productivity Monitors 190
12-2 HLK Hardware Settings 191
12-3 HLK_UNIT Settings 191
12-3-1 Setting Serial Ports 192
12-3-2 Setting Startup Services 192
12-3-3 HLK (Host Link Serial Communications) 193
12-3-4 HLK UNIT 193
12-3-5 HLK ID. 194
12-3-6 HLK TP 195
12-3-7 HlkNetTbl. 196
12-4 FINS Commands Addressed to Devices via HLK_UNIT 197
12-4-1 FINS Commands for the SYSWAY Protocol 197
12-4-2 MEMORY AREA READ: 01 01 198
12-4-3 MEMORY AREA WRITE: 01 02 199
12-4-4 Memory Area Designations 199
12-4-5 RUN: 04 01. 222
12-4-6 STOP: 04 02 223
12-4-7 CONTROLLER DATA READ: 05 01 223
12-4-8 CONTROLLER STATUS READ: 06 01 224
12-4-9 LOOPBACK TEST: 08 01 224
12-4-10 FILE MEMORY INDEX READ: 22 0F 225
12-4-11 FILE MEMORY READ: 22 10 226
12-4-12 FILE MEMORY WRITE:22 11 226
12-4-13 FORCED SET/RESET: 23 01 227
12-4-14 FORCED SET/RESET CANCEL: 23 02. 228
12-4-15 FINS Commands for the SYSWAY CV Protocol. 228
12-4-16 FINS Commands for the CompoWay/F Protocol. 228

12-5 FINS Commands Addressed to the ID Controller 229
12-5-1 FINS Commands 229
12-5-2 List of ID Controller Communications Commands 229
12-5-3 MEMORY AREA READ: 01 01 229
12-5-4 MEMORY AREA WRITE: 01 02 230
12-5-5 DATA MANAGEMENT COMMAND EXECUTE 231
12-5-6 AUTO COMMAND PROCESSING CANCEL: 04 02 232
12-5-7 LOOPBACK TEST: 08 01 233
12-5-8 ABORT: 0B 01 233
12-5-9 ID CONTROLLER COMMUNICATIONS COMMAND EXECUTE: 32 25 . . . 233
12-5-10 FINS End Codes for the ID Controller 234
12-6 FINS Commands Addressed to TP700 Productivity Monitors 235
12-6-1 FINS Commands 235
12-6-2 List of TP700 Communications Commands 235
12-6-3 MEMORY AREA READ: 01 01 235
12-6-4 List of End Codes for the TP700 Productivity Monitor 239
12-7 FINS Commands Addressed to TP710 Productivity Monitor 239
12-7-1 FINS Commands 239
12-7-2 List of TP710 Communications Commands 239
12-7-3 MEMORY AREA READ: 01 01 240
12-7-4 MEMORY AREA WRITE: 01 02 247
12-7-5 CONTROLLER STATUS READ: 06 01 248
12-7-6 FINS End Codes for the TP710 Productivity Monitor 249

12-1 HLK_UNIT Functions

HLK_UNIT is a software component that converts FINS commands to the following communications protocols.

12-1-1 Supported Serial Communications Protocols

The following three serial communications protocols are supported.
SYSWAY

SYSWAY CV

CompoWay/F

HLK_UNIT converts FINS commands to commands in the above protocols. This function enables FINS message communications through the Open Network Controller between personal computers and other devices on the Ethernet network and the following devices, including OMRON FA components that support the CompoWay/F protocol and the following OMRON PLCs.

- PLCs that do not directly support FINS commands, e.g., the CQM1, SRM1, C1000H, C2000H, and C20P.
- Temperature Controllers (e.g., the E5CN) and Intelligent Signal Processors on a CompoWay/F network, which previously could not connect to personal computers and other devices on Ethernet networks.

HLK_UNIT also enables FINS message communications with the following ID Controllers and Productivity Monitors.

V600/V620 Series ID Controllers
TP700-B□□1, TP700-B□□2, and TP710-A Productivity Monitors

12-1-2 Applicable FINS Commands and Applicable PLCs

The FINS commands supported by each protocol and the applicable PLCs are given below.

SYSWAY Protocol

FINS Commands

Command code	Name
01 01	READ MEMORY AREA
01 02	WRITE MEMORY AREA
04 01	RUN
04 02	STOP
05 01	CONTROLLER DATA READ
06 01	CONTROLLER STATUS READ
08 01	LOOPBACK TEST
22 0F	FILE MEMORY INDEX READ
22 10	FILE MEMORY READ
22 11	FILE MEMORY WRITE
23 01	FORCED SET/RESET
23 02	FORCED SET/RESET CANCEL

Applicable PLCs

The following PLCs support the SYSWAY protocol. (Not all of the above FINS commands are supported by each of the PLCs.)

C20, C50, C120, C120F, C20H/C28H/C40H/C60H, C20P/C28P/C40P/C60P, C20PF/C28PF/C40PF/C60PF, C500, C500F, C1000H, C1000HF, C2000H, C200H, C200HS, C200HX/HG/HE, CQM1, CQM1H, CPM1, CPM1A, CPM2A, CPM2C, SRM1, CV500, CVM1, CV1000, CV2000, CS1, and CJ1.

SYSWAY CV Host Link Protocol

FINS Commands

Command code		Name
01	01	MEMORY AREA READ
	02	MEMORY AREA WRITE
	03	MEMORY AREA FILL
	04	MULTIPLE MEMORY AREA READ
	05	MEMORY AREA TRANSFER
02	01	PARAMETER AREA READ
	02	PARAMETER AREA WRITE
	03	PARAMETER AREA CLEAR
03	04	PROGRAM AREA PROTECT
	05	PROGRAM AREA PROTECT CLEAR
	06	PROGRAM AREA READ
	07	PROGRAM AREA WRITE
	08	PROGRAM AREA CLEAR
04	01	RUN
	02	STOP
05	01	CONTROLLER DATA READ
	02	CONNECTION DATA READ
06	01	CONTROLLER STATUS READ
	20	CYCLE TIME READ
07	01	CLOCK READ
	02	CLOCK WRITE
09	20	MESSAGE READ (MESSAGE CLEAR, FAL/FALS READ)
0C	01	ACCESS RIGHT ACQUIRE
	02	ACCESS RIGHT FORCED ACQUIRE
	03	ACCESS RIGHT RELEASE
21	01	ERROR CLEAR
	02	ERROR LOG READ
	03	ERROR LOG CLEAR
22	01	FILE NAME READ
	02	SINGLE FILE READ
	03	SINGLE FILE WRITE
	04	MEMORY CARD FORMAT
	05	FILE DELETE
	06	VOLUME LABEL CREATE/DELETE
	07	FILE COPY
	08	FILE NAME CHANGE
	09	FILE DATA CHECK
	0A	MEMORY AREA FILE TRANSFER
	0B	PARAMETER AREA FILE TRANSFER
	0C	PROGRAM AREA FILE TRANSFER
	15	CREATE/DELETE SUBDIRECTORY
23	01	FORCED SET/RESET
	02	FORCED SET/RESET CANCEL

Applicable PLCs

The following PLCs support the SYSWAY CV protocol. (Not all of the above FINS commands are supported by each of the PLCs.)

CVM1, CV-series, CS1, and CJ1 PLCs

CompoWay/F Protocol

Applicable Commands

The commands that can be used depend on the CompoWay/F component. Refer to the operation manuals for the components.

Refer to *12-4-16 FINS Commands for the CompoWay/F Protocol* in *12-4 FINS Commands Addressed to Devices via HLK_UNIT* for information on sending FINS commands from the Open Network Controller to CompoWay/F components.

Applicable Models

Commands can be sent to any component that supports the CompoWay/F protocol.

12-1-3 Precautions

HLK does not support slave-initiated (i.e., receiving FINS commands from the PLC) communications using FINS commands.

12-1-4 ID Controllers and Productivity Monitors

V600/V620-series ID Controllers and TP700-B□□1,TP700-B□□2, and TP710-A Productivity Monitors support the CompoWay/F protocol.

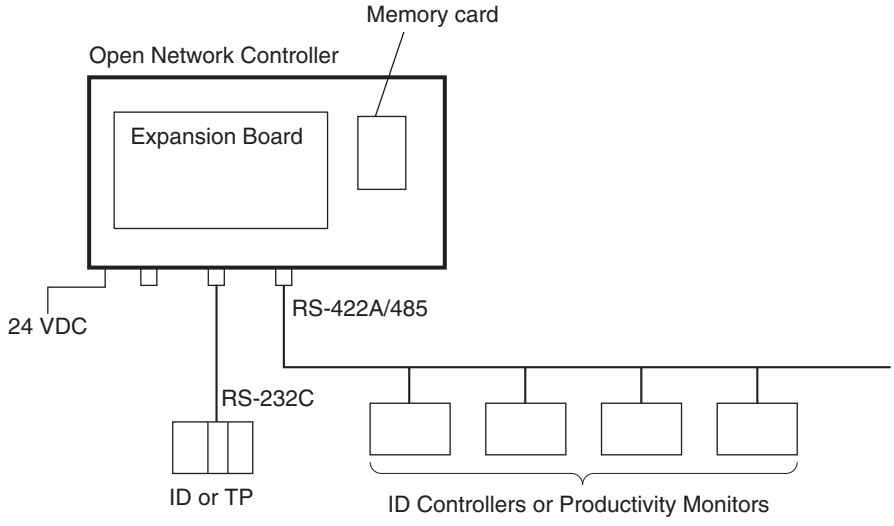

- FINS commands and responses can be used to connect The V600/V620-series ID Controllers and TP700-B□□1,TP700-B□□2, and TP710-A Productivity Monitors
- HLK_UNIT automatically converts the command/response format used between HLK_UNIT and the ID Controllers or Productivity Monitors. Therefore, FINS commands can be used to control and monitor ID Controllers or Productivity Monitors without having to use separate protocols.

FINS Commands Addressed to ID Controllers

Command code	Name
01 01	MEMORY AREA READ
01 02	MEMORY AREA WRITE
02 02	DATA MANAGEMENT COMMAND EXECUTE Checks Data Carrier memory or manages the number of times memory (EEPROM) has been rewritten.
04 02	AUTOCOMMAND PROCESSING CANCEL
08 01	LOOPBACK TEST
0B 01	ABORT
32 25	ID CONTROLLER COMMUNICATIONS COMMAND EXECUTE

FINS Commands Addressed to TP700 Productivity Monitors

FINS command	Variable	Function/measurment	Requested data type
01 01	40	All measured values	0
	41	Non-programmable total power	1
	42	Programmable total power	2
	43	Instantaneous power	3
	44	Instantaneous voltage	4
	45	Instantaneous current	5
	46	Power factor and instantaneous current	6

Note Refer to the REF *TP700 Productivity Monitor Operation Manual* for details on the functions/measured values, and required data types.

FINS Commands Addressed to TP710 Productivity Monitors

FINS command	Function	Processing details
01 01	A	Measured items (category A)
01 01	B	Statistical items (category B)
01 01, 01 02	C	Setting items (category C)
01 01, 01 02	D	User information (category D)
01 01, 01 02	E	User control information (category E)

Refer to the REF *TP710 Productivity Monitor Operation Manual* for details on the functions and processing details.

12-2 HLK Hardware Settings

Refer to *3-6 Connecting COM Port Cables* for details on cables used to connect to the COM ports.

12-3 HLK_UNIT Settings

The HLK_UNIT startup service settings, network number and node number, HLK_UNIT communications settings, and HLK address setting table must be set.

Before making the HLK_UNIT settings and make any required changes to the serial settings first.

When the node is using SYSWAY, SYSWAY CV, or CompoWay/F protocols, set the communications settings in the HLK UNIT Menu Window.
When the node is an ID Controller or Productivity Monitor, set the communica-

tions in the following Menu Windows.
ID Controller: HLK ID
Productivity Monitor: HLK TP

All nodes connected to the HLK network must be registered in the HLK address setting table (HlkNetTbl). The HLK network table is used to set the FINS node number, unit number, protocol, and model of the SYSWAY Unit, SYSWAY CV Unit, CompoWay/F Unit, ID Controller, or Productivity Monitor.

12-3-1 Setting Serial Ports

A COM port must be allocated to the HLK_UNIT in the serial port settings. In the default settings, COM1 is allocated to HLK0, COM2 is allocated to HLK1, COM3 is allocated to HLK2, and COM4 is allocated to HLK3. Set the service allocated in each COM port in the Serial Ports Setting Window. Making these settings will prevent more than one service starting from the same port.
Check the serial ports settings, and change where required before setting the other HLK_UNIT settings.

Select ***Serial Ports*** from the Menu Window. The following setting window will be displayed showing the current settings.

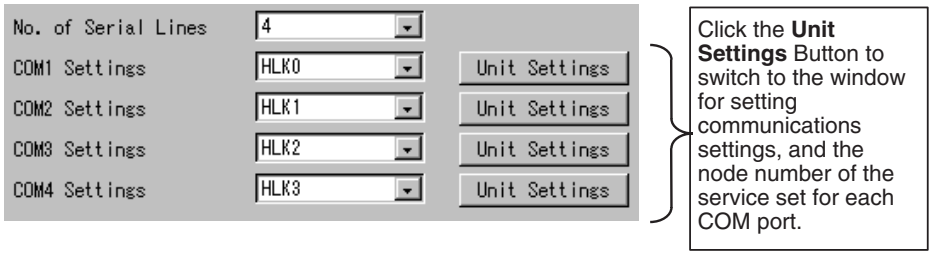

Setting Details

Item	Details
No. of Serial Lines	Sets the number of COM ports being used.
COM1 Settings	Sets the service allocated in the COM1 port.
COM2 Settings	Sets the service allocated in the COM2 port.
COM3 Settings	Sets the service allocated in the COM3 port.
COM4 Settings	Sets the service allocated in the COM4 port.

12-3-2 Setting Startup Services

The HLK_UNIT services must be registered.

1,2,3...

1. Select ***Startup Services*** from the Menu Window. The Startup Service Setting Window will be displayed showing the current settings. The default HLK_UNIT services registered are HLK0 and HLK1. To add HLK_UNIT services, use the following procedure.
2. Select ***HLK□*** in the Service Name Box and then click the **Create New** Button. The service will be registered as shown in the following window. In the following window example, the service HLK3 is added.

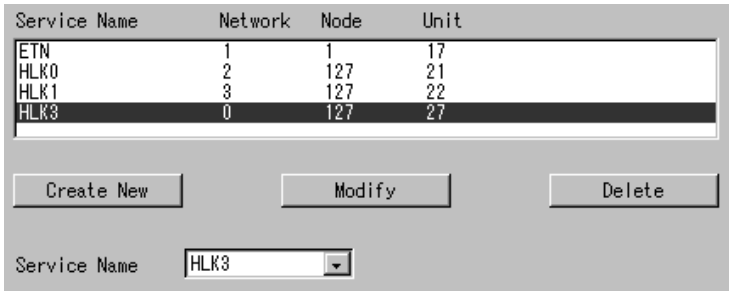

3. Click the **Write** Button.

12-3-3 HLK (Host Link Serial Communications)

Use the following procedure to set the network number and node number of HLK_UNIT.

Click ***HLK*** in the Menu Window. The following window will be displayed showing the current settings.

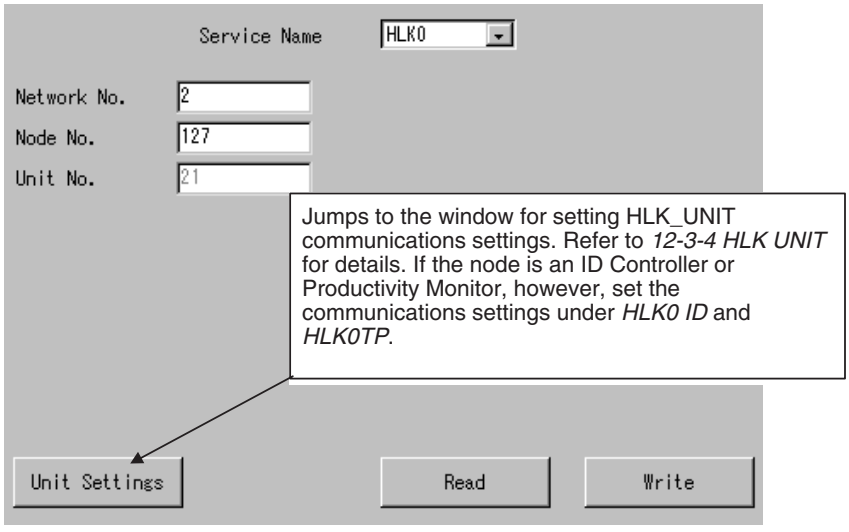

Settings

Item	Setting
Service Name	Select the name of the service to display or set: HLK0, HLK1, HLK2, and HLK3.
Network No.	Set the HLK□ network number between 1 and 127.
Node No.	Set the HLK□ node number between 1 and 253.
Unit No.	The default unit number of HLK□ is displayed. There is no reason to change the default setting.

12-3-4 HLK UNIT

The HLK□ communications settings for nodes using the SYSWAY, SYSWAY CV, or CompoWay/F protocol must be set. When the node is an ID Controller or Productivity Monitor, set the communications settings using HLK ID or HLK TP, respectively.

Click ***HLK UNIT*** in the Menu Window. The following window will be displayed showing the current settings.

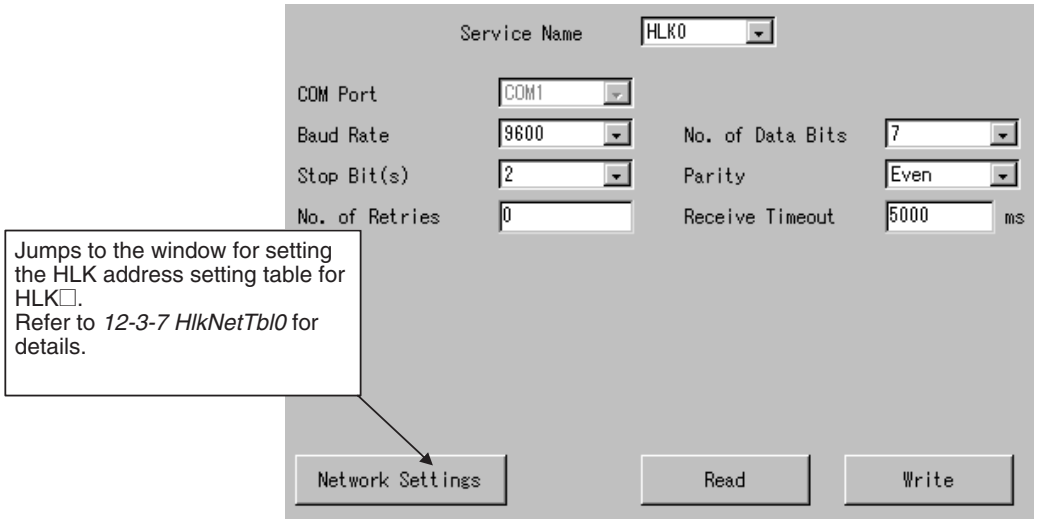

Jumps to the window for setting the HLK address setting table for HLK□.
Refer to *12-3-7 HlkNetTbl0* for details.

Settings

Item	Setting
Service Name	Select the name of the service to display or set: HLK0, HLK1, HLK2, and HLK3.
COM Port	The port allocated to HLK□ in the *Serial Ports* setting is displayed.
Baud Rate	Set the baud rate to 300, 600, 1200, 1800, 2400, 4800, 9600, 19200, 38400, 57600, or 115200.
No. of Data Bits	Set the data length to 5, 6, 7, or 8 bits.
Stop Bit(s)	Set the number of stop bits to 1 or 2.
Parity	Set the parity to even, odd, or none.
No. of Retries	Set the number of retries when a communications error occurs.
Receive Timeout	Set the Host Link response timeout time in ms.

Note When FinsLink is used, set the receive timeout shorter than the value set for the FinsLink timeout, or set the FinsLink timeout to a longer value.

12-3-5 HLK ID

Use the following procedure to set the communications settings for HLK□ when the node is an ID Controller.

Select ***HLK ID*** from the Menu Window. The following window will be displayed showing the current settings.

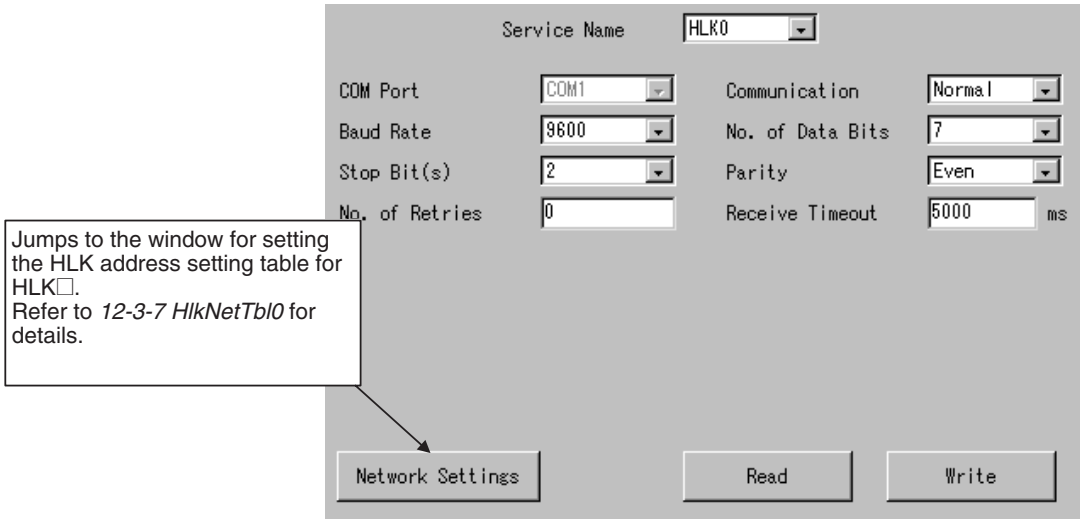

Jumps to the window for setting the HLK address setting table for HLK□.
Refer to *12-3-7 HlkNetTbl0* for details.

Settings

Item	Setting
Service Name	Select the name of the service to display or set: HLK0, HLK1, HLK2, and HLK3.
COM Port	The port allocated to HLK□ in the *Serial Ports* setting is displayed.
Communication	Set the ID command corresponding to the FINS commands 01 01 and 01 02. Normal: Read/write (RD/WT) AutoR/W: Auto read/auto write (AR/AW)
Baud Rate	Set the baud rate to 300, 600, 1200, 1800, 2400, 4800, 9600, 19200, 38400, 57600, or 115200.
No. of Data Bits	Set the data length to 5, 6, 7, or 8 bits.
Stop Bit(s)	Set the number of stop bits to 1 or 2.
Parity	Set the parity to even, odd, or none.
No. of Retries	Set the number of retries when a communications error occurs.
Receive Timeout	Set the Host Link response timeout time in ms.

12-3-6 HLK TP

Use the following procedure to set the communications settings for HLK□ when the node is a Productivity Monitor.

Select ***HLK TP*** from the Menu Window. The following window will be displayed showing the current settings.

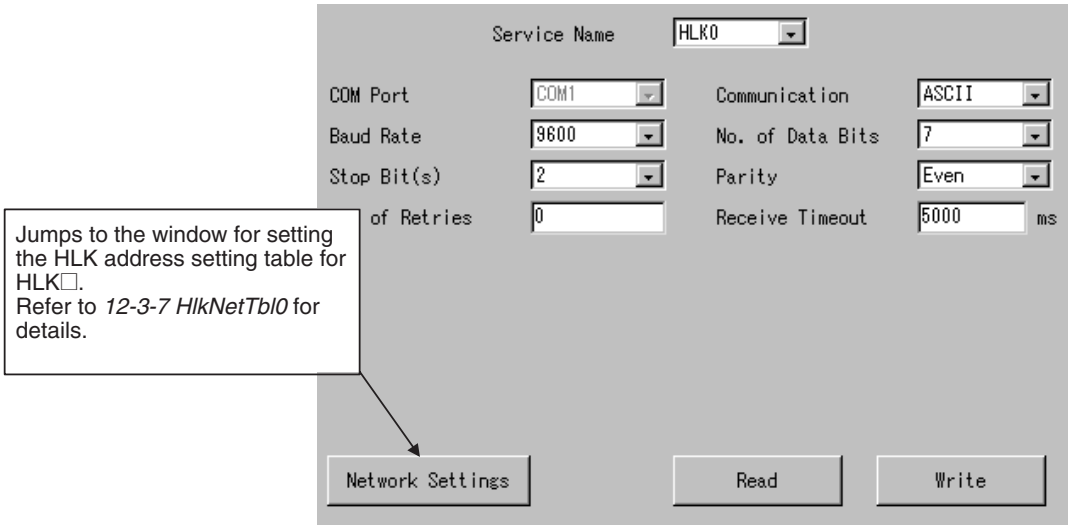

Settings

Item	Setting
Service Name	Select the name of the service to display or set: HLK0, HLK1, HLK2, and HLK3.
COM Port	The port allocated to HLK□ in the *Serial Ports* setting is displayed.
Communication	Set the send mode of the Productivity Monitor TP to ASCII or binary.
Baud Rate	Set the baud rate to 300, 600, 1200, 1800, 2400, 4800, 9600, 19200, 38400, 57600, or 115200.
No. of Data Bits	Set the data length to 5, 6, 7, or 8 bits.
Stop Bit(s)	Set the number of stop bits to 1 or 2.
Parity	Set the parity to even, odd, or none.
No. of Retries	Set the number of retries when a communications error occurs.
Receive Timeout	Set the Host Link response timeout time in ms.

12-3-7 HlkNetTbl

All nodes connected to the HLK□ network must be registered in the HLK address setting table.

Set the FINS node number, unit number, protocol, and model for each node: SYSWAY, SYSWAY CV, CompoWay/F, ID Controller, or Productivity Monitor.

- SYSWAY or SYSWAY CV nodes cannot be used together with CompoWay/F nodes. SYSWAY and SYSWAY CV nodes can be used together.
- ID Controllers and TP Productivity Monitors cannot be used together with other protocols.

Select ***HlkNetTbl*** from the Menu Window. The following window will be displayed showing the current settings.

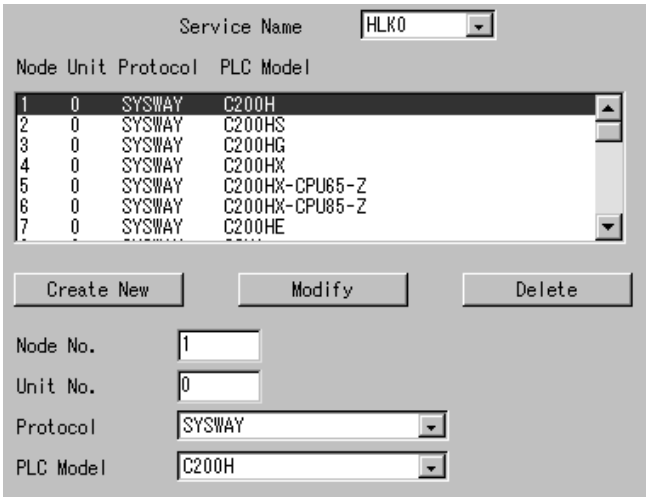

Settings

Item	Setting
Service Name	Select the name of the service to display or set: HLK0, HLK1, HLK2, and HLK3.
Node	Set the FINS node number between 1 and 253.
Unit	Set the unit number of the connected PLC set as the Host Link between 0 and 255.
Protocol	Set the protocol to SYSWAY, SYSWAY CV, CompoWay/F, ID, TP700, or TP710.
PLC Model	Set the PLC model.

Note When the TP700 Productivity Monitor is used, TP700-B1 and TP700-B2 can be set as the PLC model, but the product code display is different, as follows:

TP700-B1 is displayed as TP700-B□□1.

TP700-B2 is displayed as TP700-B□□2.

12-4 FINS Commands Addressed to Devices via HLK_UNIT

Supported Serial Communications Protocols

The following three serial communications protocols are supported by the Open Network Controller.
SYSWAY
SYSWAY CV
CompoWay/F

HLK_UNIT converts FINS commands to commands in the above protocols.

The FINS commands supported by HLK_UNIT are described in this section by protocol.

12-4-1 FINS Commands for the SYSWAY Protocol

This section describes the FINS commands that can be used with the SYSWAY protocol.

FINS Commands

Command code	Name
01 01	READ MEMORY AREA
01 02	WRITE MEMORY AREA

Command code	Name
04 01	RUN
04 02	STOP
05 01	CONTROLLER DATA READ
06 01	CONTROLLER STATUS READ
08 01	LOOPBACK TEST
22 0F	FILE MEMORY INDEX READ (see note)
22 10	FILE MEMORY READ (see note)
22 11	FILE MEMORY WRITE (see note)
23 01	FORCED SET/RESET
23 02	FORCED SET/RESET CANCEL

Note The commands for file memory can be used only for the C1000H, C1000HF, and C2000H.

Applicable PLCs

The following PLCs support the SYSWAY protocol.

C20, C50, C120, C120F, C20H/C28H/C40H/C60H, C20P/C28P/C40P/C60P, C20PF/C28PF/C40PF/C60PF, C500, C500F, C1000H, C1000HF, C2000H, C200H, C200HS, C200HX/HG/HE, CQM1, CQM1H, CPM1, CPM1A, CPM2A, CPM2C, SRM1, CV500, CVM1, CV1000, CV2000, and CS1, and CJ1.

12-4-2 MEMORY AREA READ: 01 01

Reads the contents of the specified number of consecutive memory area words starting from the specified word.

Command Format

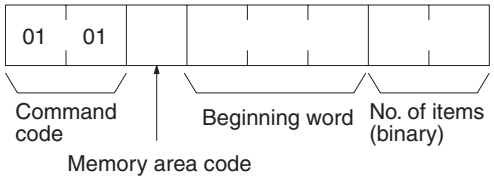

Response Format

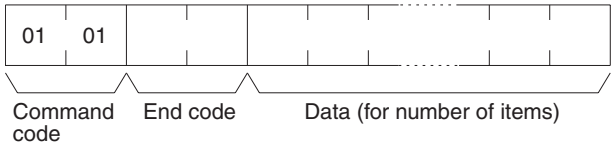

Parameters

Memory area code, beginning word, number of items (command)

Specify the type of data to be read, the beginning word of the data to be read, and the number of items of data to be read.

Refer to *12-4-4 Memory Area Designations* for the specific addresses that can be used.

Data (response)

The data from the specified memory area is returned in sequence starting from the beginning word. The required number of bytes in total is calculated as follows: Number of bytes required by each item x number of items

For details regarding data configuration, refer to *12-4-4 Memory Area Designations*.

End code (response)

Refer to *19-1 Troubleshooting with FINS End Codes* for information on end codes.

Memory Area Designations

For details on the memory area designation methods for each PLC model, refer to *12-4-4 Memory Area Designations*.

12-4-3 MEMORY AREA WRITE: 01 02

Writes data to the specified number of consecutive words starting from the specified word.

Command Format

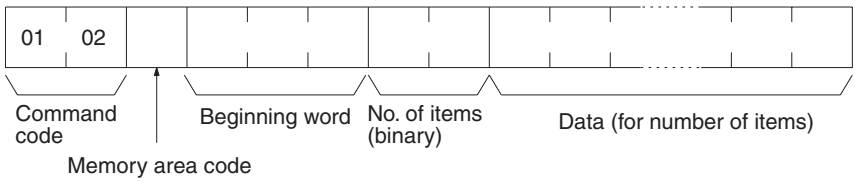

Response Format

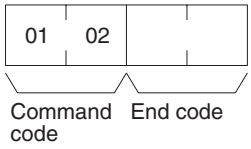

Parameters

Memory area code, beginning word, number of items (command)

Specify the type of data to be written, the beginning word of the data to be written, and the number of items of data to be written.

The memory areas that can be read are given in the following table. Refer to *Memory Area Designations* below for the specific addresses that can be used.

Data (command)

The data to be written to the specified memory area is provided in sequence starting from the beginning word. The required number of bytes in total is calculated as follows:

Number of bytes required by each item x number of items

For details regarding data configuration, refer to *12-4-4 Memory Area Designations*.

End code (response)

Refer to *19-1 Troubleshooting with FINS End Codes* for information on end codes.

Memory Area Designations

For details on the memory area designation methods for each PLC model, refer to *12-4-4 Memory Area Designations*.

12-4-4 Memory Area Designations

This section provides tables of the memory area designations for each PLC that are supported by FINS and SYSWAY commands. The following terms are used in the tables.

Command:
The hexadecimal FINS command code or ASCII Host Link command code.

Memory area code:
The memory area code used within FINS commands.

Offset:
The offset of each PLC memory area (e.g., CIO, LR, DM, etc.). These indicate the beginning words of the memory areas used in Host Link commands within the areas defined by memory area codes for FINS commands.

Size:
The size of the memory area in hexadecimal.

C200H

Command code		Memory area code	Offset	Size	Application
01	01	80	0000	0100	IR/SR Area read
			03E8	0040	LR Area read
			0428	0064	HR Area read
			048C	001C	AR Area read
		01	0000	0200	Timer/counter Completion Flag read
		81	0000	0200	Timer/counter PV read
		82	0000	07D0	DM Area read
	02	80	0000	0100	IR/SR Area write
			03E8	0040	LR Area write
			0428	0064	HR Area write
			048C	001C	AR Area write
		01	0000	0200	Timer/counter Completion Flag write
		81	0000	0200	Timer/counter PV write
		82	0000	07D0	DM Area write

C200HS

Command code		Memory area code	Offset	Size	Application
01	01	80	0000	0200	IR/SR Area read
			03E8	0040	LR Area read
			0428	0064	HR Area read
			048C	001C	AR Area read
		01	0000	0200	Timer/counter Completion Flag read
		81	0000	0200	Timer/counter PV read
		82	0000	2710	DM Area read
	02	80	0000	0200	IR/SR Area write
			03E8	0040	LR Area write
			0428	0064	HR Area write
			048C	001C	AR Area write
		01	0000	0200	Timer/counter Completion Flag write
		81	0000	0200	Timer/counter PV write
		82	0000	2710	DM Area write

C200HG

Command code		Memory area code	Offset	Size	Application
01	01	80	0000	0200	IR/SR Area read
			03E8	0040	LR Area read
			0428	0064	HR Area read
			048C	001C	AR Area read
		01	0000	0200	Timer/counter Completion Flag read
		81	0000	0200	Timer/counter PV read
		82	0000	2710	DM Area read
		90	0000	1800	EM bank 0 read
		98	0000	1800	EM current bank read
	02	80	0000	0200	IR/SR Area write
			03E8	0040	LR Area write
			0428	0064	HR Area write
			048C	001C	AR Area write
		01	0000	0200	Timer/counter Completion Flag write
		81	0000	0200	Timer/counter PV write
		82	0000	2710	DM Area write
		90	0000	1800	EM bank 0 write
		98	0000	1800	EM current bank write

C200HX

Command code		Memory area code	Offset	Size	Application
01	01	80	0000	0200	IR/SR Area read
			03E8	0040	LR Area read
			0428	0064	HR Area read
			048C	001C	AR Area read
		01	0000	0200	Timer/counter Completion Flag read
		81	0000	0200	Timer/counter PV read
		82	0000	2710	DM Area read
		90 to 92	0000	1800	EM bank read for bank 0 to 2
		98	0000	1800	EM current bank read
	02	80	0000	0200	IR/SR Area write
			03E8	0040	LR Area write
			0428	0064	HR Area write
			048C	001C	AR Area write
		01	0000	0200	Timer/counter Completion Flag write
		81	0000	0200	Timer/counter PV write
		82	0000	2710	DM Area write
		90 to 92	0000	1800	EM bank write for bank 0 to 2
		98	0000	1800	EM current bank write

C200HX-CPU65-Z

Command code		Memory area code	Offset	Size	Application
01	01	80	0000	0200	IR/SR Area read
			03E8	0040	LR Area read
			0428	0064	HR Area read
			048C	001C	AR Area read
		01	0000	0200	Timer/counter Completion Flag read
		81	0000	0200	Timer/counter PV read
		82	0000	2710	DM Area read
		90 to 97	0000	1800	EM bank read for bank 0 to 7
		98	0000	1800	EM current bank read
	02	80	0000	0200	IR/SR Area write
			03E8	0040	LR Area write
			0428	0064	HR Area write
			048C	001C	AR Area write
		01	0000	0200	Timer/counter Completion Flag write
		81	0000	0200	Timer/counter PV write
		82	0000	2710	DM Area write
		90 to 97	0000	1800	EM bank write for bank 0 to 7
		98	0000	1800	EM current bank write

C200HX-CPU85-Z

Command code		Memory area code	Offset	Size	Application
01	01	80	0000	0200	IR/SR Area read
			03E8	0040	LR Area read
			0428	0064	HR Area read
			048C	001C	AR Area read
		01	0000	0200	Timer/counter Completion Flag read
		81	0000	0200	Timer/counter PV read
		82	0000	2710	DM Area read
		90 to 97	0000	1800	EM bank read for bank 0 to 7
		A8 to AF	0000	1800	EM bank read for bank 8 to F
		98	0000	1800	EM current bank read
	02	80	0000	0200	IR/SR Area write
			03E8	0040	LR Area write
			0428	0064	HR Area write
			048C	001C	AR Area write
		01	0000	0200	Timer/counter Completion Flag write
		81	0000	0200	Timer/counter PV write
		82	0000	2710	DM Area write
		90 to 97	0000	1800	EM bank write for bank 0 to 7
		A8 to AF	0000	1800	EM bank write for bank 8 to F
		98	0000	1800	EM current bank write

C200HE

Command code		Memory area code	Offset	Size	Application
01	01	80	0000	0200	IR/SR Area read
			03E8	0040	LR Area read
			0428	0064	HR Area read
			048C	001C	AR Area read
		01	0000	0200	Timer/counter Completion Flag read
		81	0000	0200	Timer/counter PV read
		82	0000	2710	DM Area read
	02	80	0000	0200	IR/SR Area write
			03E8	0040	LR Area write
			0428	0064	HR Area write
			048C	001C	AR Area write
		01	0000	0200	Timer/counter Completion Flag write
		81	0000	0200	Timer/counter PV write
		82	0000	2710	DM Area write

CQM1

Command code		Memory area code	Offset	Size	Application
01	01	80	0000	0100	IR/SR Area read
			03E8	0040	LR Area read
			0428	0064	HR Area read
			048C	001C	AR Area read
		01	0000	0200	Timer/counter Completion Flag read
		81	0000	0200	Timer/counter PV read
		82	0000	1A00	DM Area read
	02	80	0000	0100	IR/SR Area write
			03E8	0040	LR Area write
			0428	0064	HR Area write
			048C	001C	AR Area write
		01	0000	0200	Timer/counter Completion Flag write
		81	0000	0200	Timer/counter PV write
		82	0000	1A00	DM Area write

CQM1H-CPU11/21/51

Command code		Memory area code	Offset	Size	Application
01	01	80	0000	0100	IR/SR Area read
			03E8	0040	LR Area read
			0428	0064	HR Area read
			048C	001C	AR Area read
		01	0000	0200	Timer/counter Completion Flag read
		81	0000	0200	Timer/counter PV read
		82	0000	1A00	DM Area read
	02	80	0000	0100	IR/SR Area write
			03E8	0040	LR Area write
			0428	0064	HR Area write
			048C	001C	AR Area write
		01	0000	0200	Timer/counter Completion Flag write
		81	0000	0200	Timer/counter PV write
		82	0000	1A00	DM Area write

CQM1H-CPU61

Command code		Memory area code	Offset	Size	Application
01	01	80	0000	0100	IR/SR Area read
			03E8	0040	LR Area read
			0428	0064	HR Area read
			048C	001C	AR Area read
		01	0000	0200	Timer/counter Completion Flag read
		81	0000	0200	Timer/counter PV read
		82	0000	1A00	DM Area read
		90	0000	1800	EM bank read for bank 0
		98	0000	1800	EM current bank read
	02	80	0000	0100	IR/SR Area write
			03E8	0040	LR Area write
			0428	0064	HR Area write
			048C	001C	AR Area write
		01	0000	0200	Timer/counter Completion Flag write
		81	0000	0200	Timer/counter PV write
		82	0000	1A00	DM Area write
		90	0000	1800	EM bank write for bank 0
		98	0000	1800	EM current bank write

CPM1/CPM1A

Command code		Memory area code	Offset	Size	Application
01	01	80	0000	0100	IR/SR Area read
			03E8	0010	LR Area read
			0428	0014	HR Area read
			048C	0010	AR Area read
		01	0000	0080	Timer/counter Completion Flag read
		81	0000	0080	Timer/counter PV read
		82	0000	1A00	DM Area read
	02	80	0000	0100	IR/SR Area write
			03E8	0010	LR Area write
			0428	0014	HR Area write
			048C	0010	AR Area write
		01	0000	0080	Timer/counter Completion Flag write
		81	0000	0080	Timer/counter PV write
		82	0000	1A00	DM Area write

CPM2A/CPM2C

Command code		Memory area code	Offset	Size	Application
01	01	80	0000	0100	IR/SR Area read
			03E8	0010	LR Area read
			0428	0014	HR Area read
			048C	0018	AR Area read
		01	0000	0100	Timer/counter Completion Flag read
		81	0000	0100	Timer/counter PV read
		82	0000	1A00	DM Area read
	02	80	0000	0100	IR/SR Area write
			03E8	0010	LR Area write
			0428	0014	HR Area write
			048C	0018	AR Area write
		01	0000	0100	Timer/counter Completion Flag write
		81	0000	0100	Timer/counter PV write
		82	0000	1A00	DM Area write

SRM1

Command code		Memory area code	Offset	Size	Application
01	01	80	0000	0100	IR/SR Area read
			03E8	0010	LR Area read
			0428	0014	HR Area read
			048C	0010	AR Area read
		01	0000	0080	Timer/counter Completion Flag read
		81	0000	0080	Timer/counter PV read
		82	0000	1A00	DM Area read
	02	80	0000	0100	IR/SR Area write
			03E8	0010	LR Area write
			0428	0014	HR Area write
			048C	0010	AR Area write
		01	0000	0080	Timer/counter Completion Flag write
		81	0000	0080	Timer/counter PV write
		82	0000	1A00	DM Area write

CV500

Command code		Memory area code	Offset	Size	Application
01	01	80	0000	09FC	CIO Area read
			0B00	0200	Auxiliary Area read
		81	0000	0200	TimerPV read
			0800	0200	Counter PV read
		01	0000	0200	Timer Completion Flag read
			0800	0200	Counter Completion Flag read
		82	0000	2000	DM Area read
	02	80	0000	09FC	CIO Area write
			0B00	0200	Auxiliary Area write
		81	0000	0200	TimerPV write
			0800	0200	Counter PV write
		01	0000	0200	Timer Completion Flag write
			0800	0200	Counter Completion Flag write
		82	0000	2000	DM Area write

CVM1-CPU01

Command code		Memory area code	Offset	Size	Application
01	01	80	0000	09FC	CIO Area read
			0B00	0200	Auxiliary Area read
		81	0000	0200	TimerPV read
			0800	0200	Counter PV read
		01	0000	0200	Timer Completion Flag read
			0800	0200	Counter Completion Flag read
		82	0000	2000	DM Area read
	02	80	0000	09FC	CIO Area write
			0B00	0200	Auxiliary Area write
		81	0000	0200	TimerPV write
			0800	0200	Counter PV write
		01	0000	0200	Timer Completion Flag write
			0800	0200	Counter Completion Flag write
		82	0000	2000	DM Area write

CVM1-CPU11

Command code		Memory area code	Offset	Size	Application
01	01	80	0000	09FC	CIO Area read
			0B00	0200	Auxiliary Area read
		81	0000	0400	TimerPV read
			0800	0400	Counter PV read
		01	0000	0400	Timer Completion Flag read
			0800	0400	Counter Completion Flag read
		82	0000	2710	DM Area read
	02	80	0000	09FC	CIO Area write
			0B00	0200	Auxiliary Area write
		81	0000	0400	TimerPV write
			0800	0400	Counter PV write
		01	0000	0400	Timer Completion Flag write
			0800	0400	Counter Completion Flag write
		82	0000	2710	DM Area write

CVM1-CPU21

Command code		Memory area code	Offset	Size	Application
01	01	80	0000	09FC	CIO Area read
			0B00	0200	Auxiliary Area read
		81	0000	0400	TimerPV read
			0800	0400	Counter PV read
		01	0000	0400	Timer Completion Flag read
			0800	0400	Counter Completion Flag read
		82	0000	2710	DM Area read
		90 to 97	0000	7FFE	EM bank read for bank 0 to 7
		98	0000	7FFE	EM current bank read
	02	80	0000	09FC	CIO Area write
			0B00	0200	Auxiliary Area write
		81	0000	0400	TimerPV write
			0800	0400	Counter PV write
		01	0000	0400	Timer Completion Flag write
			0800	0400	Counter Completion Flag write
		82	0000	2710	DM Area write
		90 to 97	0000	7FFE	EM bank write for bank 0 to 7
		98	0000	7FFE	EM current bank write

CV1000/CV2000

Command code		Memory area code	Offset	Size	Application
01	01	80	0000	09FC	CIO Area read
			0B00	0200	Auxiliary Area read
		81	0000	0400	TimerPV read
			0800	0400	Counter PV read
		01	0000	0400	Timer Completion Flag read
			0800	0400	Counter Completion Flag read
		82	0000	2710	DM Area read
		90 to 97	0000	7FFE	EM bank read for bank 0 to 7
		98	0000	7FFE	EM current bank read
	02	80	0000	09FC	CIO Area write
			0B00	0200	Auxiliary Area write
		81	0000	0400	TimerPV write
			0800	0400	Counter PV write
		01	0000	0400	Timer Completion Flag write
			0800	0400	Counter Completion Flag write
		82	0000	2710	DM Area write
		90 to 97	0000	7FFE	EM bank write for bank 0 to 7
		98	0000	7FFE	EM current bank write

C20

Command code		Memory area code	Offset	Size	Application
01	01	80	0000	0014	IR/SR Area read
			0428	000A	HR Area read
		01	0000	0200	Timer/counter Completion Flag read
		81	0000	0200	Timer/counter PV read
	02	80	0000	0014	IR/SR Area write
			0428	000A	HR Area write
		01	0000	0200	Timer/counter Completion Flag write
		81	0000	0200	Timer/counter PV write

C20H/C28H/C40H/C60H

Command code		Memory area code	Offset	Size	Application
01	01	80	0000	0100	IR/SR Area read
			03E8	0040	LR Area read
			0428	0064	HR Area read
			048C	001C	AR Area read
		01	0000	0200	Timer/counter Completion Flag read
		81	0000	0200	Timer/counter PV read
		82	0000	07D0	DM Area read
	02	80	0000	0100	IR/SR Area write
			03E8	0040	LR Area write
			0428	0064	HR Area write
			048C	001C	AR Area write
		01	0000	0200	Timer/counter Completion Flag write
		81	0000	0200	Timer/counter PV write
		82	0000	07D0	DM Area write

C20/28/40/60P

Command code		Memory area code	Offset	Size	Application
01	01	80	0000	0014	IR/SR Area read
			0428	000A	HR Area read
		01	0000	0030	Timer/counter Completion Flag read
		81	0000	0030	Timer/counter PV read
		82	0000	0040	DM Area read
	02	80	0000	0014	IR/SR Area write
			0428	000A	HR Area write
		01	0000	0030	Timer/counter Completion Flag write
		81	0000	0030	Timer/counter PV write
		82	0000	0040	DM Area write

C20/28/40/60PF

Command code		Memory area code	Offset	Size	Application
01	01	80	0000	0020	IR/SR Area read
			0428	0010	HR Area read
		01	0000	0040	Timer/counter Completion Flag read
		81	0000	0040	Timer/counter PV read
		82	0000	0080	DM Area read
	02	80	0000	0020	IR/SR Area write
			0428	0010	HR Area write
		01	0000	0040	Timer/counter Completion Flag write
		81	0000	0040	Timer/counter PV write
		82	0000	0080	DM Area write

C50

Command code		Memory area code	Offset	Size	Application
01	01	80	0000	0040	IR/SR Area read
			03E8	0020	LR Area read
			0428	0020	HR Area read
		01	0000	0080	Timer/counter Completion Flag read
		81	0000	0080	Timer/counter PV read
		82	0000	0200	DM Area read
	02	80	0000	0040	IR/SR Area write
			03E8	0020	LR Area write
			0428	0020	HR Area write
		01	0000	0080	Timer/counter Completion Flag write
		81	0000	0080	Timer/counter PV write
		82	0000	0200	DM Area write

C120/C120F

Command code		Memory area code	Offset	Size	Application
01	01	80	0000	0040	IR/SR Area read
			0428	0020	HR Area read
		01	0000	0080	Timer/counter Completion Flag read
		81	0000	0080	Timer/counter PV read
		82	0000	0200	DM Area read
	02	80	0000	0040	IR/SR Area write
			0428	0020	HR Area write
		01	0000	0080	Timer/counter Completion Flag write
		81	0000	0080	Timer/counter PV write
		82	0000	0200	DM Area write

C500

Command code		Memory area code	Offset	Size	Application
01	01	80	0000	0100	IR/SR Area read
			03E8	0020	LR Area read
			0428	0020	HR Area read
		01	0000	0080	Timer/counter Completion Flag read
		81	0000	0080	Timer/counter PV read
		82	0000	0200	DM Area read
	02	80	0000	0100	IR/SR Area write
			03E8	0020	LR Area write
			0428	0020	HR Area write
		01	0000	0080	Timer/counter Completion Flag write
		81	0000	0080	Timer/counter PV write
		82	0000	0200	DM Area write

C500F

Command code		Memory area code	Offset	Size	Application
01	01	80	0000	0100	IR/SR Area read
			03E8	0020	LR Area read
			0428	0020	HR Area read
		01	0000	0080	Timer/counter Completion Flag read
		81	0000	0080	Timer/counter PV read
		82	0000	1000	DM Area read
	02	80	0000	0100	IR/SR Area write
			03E8	0020	LR Area write
			0428	0020	HR Area write
		01	0000	0080	Timer/counter Completion Flag write
		81	0000	0080	Timer/counter PV write
		82	0000	1000	DM Area write

C1000H

Command code		Memory area code	Offset	Size	Application
01	01	80	0000	0100	IR/SR Area read
			03E8	0040	LR Area read
			0428	0064	HR Area read
			048C	001C	AR Area read
		01	0000	0200	Timer/counter Completion Flag read
		81	0000	0200	Timer/counter PV read
		82	0000	1000	DM Area read
	02	80	0000	0100	IR/SR Area write
			03E8	0040	LR Area write
			0428	0064	HR Area write
			048C	001C	AR Area write
		01	0000	0200	Timer/counter Completion Flag write
		81	0000	0200	Timer/counter PV write
		82	0000	1000	DM Area write

C1000HF

Command code		Memory area code	Offset	Size	Application
01	01	80	0000	0100	IR/SR Area read
			03E8	0040	LR Area read
			0428	0064	HR Area read
			048C	001C	AR Area read
		01	0000	0200	Timer/counter Completion Flag read
		81	0000	0200	Timer/counter PV read
		82	0000	2710	DM Area read
	02	80	0000	0100	IR/SR Area write
			03E8	0040	LR Area write
			0428	0064	HR Area write
			048C	001C	AR Area write
		01	0000	0200	Timer/counter Completion Flag write
		81	0000	0200	Timer/counter PV write
		82	0000	2710	DM Area write

C2000H

Command code		Memory area code	Offset	Size	Application
01	01	80	0000	0100	IR/SR Area read
			03E8	0040	LR Area read
			0428	0064	HR Area read
			048C	001C	AR Area read
		01	0000	0200	Timer/counter Completion Flag read
		81	0000	0200	Timer/counter PV read
		82	0000	1A00	DM Area read
	02	80	0000	0100	IR/SR Area write
			03E8	0040	LR Area write
			0428	0064	HR Area write
			048C	001C	AR Area write
		01	0000	0200	Timer/counter Completion Flag write
		81	0000	0200	Timer/counter PV write
		82	0000	1A00	DM Area write

CS1-CPU67

Command code		Memory area code	Offset	Size	Application
01	01	80	0000	09FC	CIO Area read
		B0	0000	1800	
		B2	0000	0200	HR Area read
		80	0B00	03C0	Auxiliary Area read
		B3	0000	03C0	
		01	0000	0800	Timer/counter Completion Flag read
			0800	0800	
		09	0000	0800	
			8000	0800	
		81	0000	0800	Timer/counter PV read
			0800	0800	
		89	0000	0800	
			8000	0800	
		82	0000	2710	DM Area read
		90 to 97	0000	2710	EM bank read for bank 0 to 7
		A0 to A7			
		A8 to AC	0000	2710	EM bank read for bank 8 to C
		98	0000	2710	EM current bank read
	02	80	0000	09FC	CIO Area write
		B0	0000	1800	
		B2	0000	0200	HR Area write
		80	0B00	03C0	AR Area write
		B3	0000	03C0	
		81	0000	0800	Timer/counter PV write
			0800	0800	
		89	0000	0800	
			8000	0800	
		82	0000	2710	DM Area write
		90 to 97	0000	2710	EM bank write for bank 0 to 7
		A0 to A7			
		A8 to AC	0000	2710	EM bank write for bank 8 to C
		98	0000	2710	EM current bank write

CS1-CPU66

Command code		Memory area code	Offset	Size	Application
01	01	80	0000	09FC	CIO Area read
		B0	0000	1800	
		B2	0000	0200	HR Area read
		80	0B00	03C0	Auxiliary Area read
		B3	0000	03C0	
		01	0000	0800	Timer/counter Completion Flag read
			0800	0800	
		09	0000	0800	
			8000	0800	
		81	0000	0800	Timer/counter PV read
			0800	0800	
		89	0000	0800	
			8000	0800	
		82	0000	2710	DM Area read
		90 to 96	0000	2710	EM bank read for bank 0 to 6
		A0 to A6			
		98	0000	2710	EM current bank read
	02	80	0000	09FC	CIO Area write
		B0	0000	1800	
		B2	0000	0200	HR Area write
		80	0B00	03C0	AR Area write
		B3	0000	03C0	
		81	0000	0800	Timer/counter PV write
			0800	0800	
		89	0000	0800	
			8000	0800	
		82	0000	2710	DM Area write
		90 to 96	0000	2710	EM bank write for bank 0 to 6
		A0 to A6			
		98	0000	2710	EM current bank write

CS1-CPU65/45

Command code		Memory area code	Offset	Size	Application
01	01	80	0000	09FC	CIO Area read
		B0	0000	1800	
		B2	0000	0200	HR Area read
		80	0B00	03C0	Auxiliary Area read
		B3	0000	03C0	
		01	0000	0800	Timer/counter Completion Flag read
			0800	0800	
		09	0000	0800	
			8000	0800	
		81	0000	0800	Timer/counter PV read
			0800	0800	
		89	0000	0800	
			8000	0800	
		82	0000	2710	DM Area read
		90 to 92	0000	2710	EM bank read for bank 0 to 2
		A0 to A6			
		98	0000	2710	EM current bank read
	02	80	0000	09FC	CIO Area write
		B0	0000	1800	
		B2	0000	0200	HR Area write
		80	0B00	03C0	AR Area write
		B3	0000	03C0	
		81	0000	0800	Timer/counter PV write
			0800	0800	
		89	0000	0800	
			8000	0800	
		82	0000	2710	DM Area write
		90 to 92	0000	2710	EM bank write for bank 0 to 2
		A0 to A2			
		98	0000	2710	EM current bank write

CS1-CPU64/44

Command code		Memory area code	Offset	Size	Application
01	01	80	0000	09FC	CIO Area read
		B0	0000	1800	
		B2	0000	0200	HR Area read
		80	0B00	03C0	Auxiliary Area read
		B3	0000	03C0	
		01	0000	0800	Timer/counter Completion Flag read
			0800	0800	
		09	0000	0800	
			8000	0800	
		81	0000	0800	Timer/counter PV read
			0800	0800	
		89	0000	0800	
			8000	0800	
		82	0000	2710	DM Area read
		90	000	2710	EM bank 0 read
		A0			
		98	0000	2710	EM current bank read
	02	80	0000	09FC	CIO Area write
		B0	0000	1800	
		B2	0000	0200	HR Area write
		80	0B00	03C0	AR Area write
		B3	0000	03C0	
		81	0000	0800	Timer/counter PV write
			0800	0800	
		89	0000	0800	
			8000	0800	
		82	0000	2710	DM Area write
		90	000	2710	EM bank 0 write
		A0			
		98	0000	2710	EM current bank write

CS1-CPU63/43/42

Command code		Memory area code	Offset	Size	Application
01	01	80	0000	09FC	CIO Area read
		B0	0000	1800	
		B2	0000	0200	HR Area read
		80	0B00	03C0	Auxiliary Area read
		B3	0000	03C0	
		01	0000	0800	Timer/counter Completion Flag read
			0800	0800	
		09	0000	0800	
			8000	0800	
		81	0000	0800	Timer/counter PV read
			0800	0800	
		89	0000	0800	
			8000	0800	
		82	0000	2710	DM Area read
	02	80	0000	09FC	CIO Area write
		B0	0000	1800	
		B2	0000	0200	HR Area write
		80	0B00	03C0	AR Area write
		B3	0000	03C0	
		81	0000	0800	Timer/counter PV write
			0800	0800	
		89	0000	0800	
			8000	0800	
		82	0000	2710	DM Area write

CS1-CPU44

Command code		Memory area code	Offset	Size	Application
01	01	80	0000	09FC	CIO Area read
		B0	0000	1800	
		B2	0000	0200	HR Area read
		80	0B00	03C0	Auxiliary Area read
		B3	0000	03C0	
		01	0000	0800	Timer/counter Completion Flag read
			0800	0800	
		09	0000	0800	
			8000	0800	
		81	0000	0800	Timer/counter PV read
			0800	0800	
		89	0000	0800	
			8000	0800	
		82	0000	2710	DM Area read
		90	0000	2710	EM bank read for bank 0
		A0			
		98	0000	2710	EM current bank read
	02	80	0000	09FC	CIO Area write
		B0	0000	1800	
		B2	0000	0200	HR Area write
		80	0B00	03C0	AR Area write
		B3	0000	03C0	
		81	0000	0800	Timer/counter PV write
			0800	0800	
		89	0000	0800	
			8000	0800	
		82	0000	2710	DM Area write
		90	0000	2710	EM bank write for bank 0
		A0			
		98	0000	2710	EM current bank write

CS1-CPU45

Command code		Memory area code	Offset	Size	Application
01	01	80	0000	09FC	CIO Area read
		B0	0000	1800	
		B2	0000	0200	HR Area read
		80	0B00	03C0	Auxiliary Area read
		B3	0000	03C0	
		01	0000	0800	Timer/counter Completion Flag read
			0800	0800	
		09	0000	0800	
			8000	0800	
		81	0000	0800	Timer/counter PV read
			0800	0800	
		89	0000	0800	
			8000	0800	
		82	0000	2710	DM Area read
		90 to 92	0000	2710	EM bank read for bank 0 to 2
		A0 to A2			
		98	0000	2710	EM current bank read
	02	80	0000	09FC	CIO Area write
		B0	0000	1800	
		B2	0000	0200	HR Area write
		80	0B00	03C0	AR Area write
		B3	0000	03C0	
		81	0000	0800	Timer/counter PV write
			0800	0800	
		89	0000	0800	
			8000	0800	
		82	0000	2710	DM Area write
		90 to 92	0000	2710	EM bank write for bank 0 to 2
		A0 to A2			
		98	0000	2710	EM current bank write

CS1-CPU66

Command code		Memory area code	Offset	Size	Application
01	01	80	0000	09FC	CIO Area read
		B0	0000	1800	
		B2	0000	0200	HR Area read
		80	0B00	03C0	Auxiliary Area read
		B3	0000	03C0	
		01	0000	0800	Timer/counter Completion Flag read
			0800	0800	
		09	0000	0800	
			8000	0800	
		81	0000	0800	Timer/counter PV read
			0800	0800	
		89	0000	0800	
			8000	0800	
		82	0000	2710	DM Area read
		90 to 96	0000	2710	EM bank read for bank 0 to 6
		A0 to A6			
		98	0000	2710	EM current bank read
	02	80	0000	09FC	CIO Area write
		B0	0000	1800	
		B2	0000	0200	HR Area write
		80	0B00	03C0	AR Area write
		B3	0000	03C0	
		81	0000	0800	Timer/counter PV write
			0800	0800	
		89	0000	0800	
			8000	0800	
		82	0000	2710	DM Area write
		90 to 96	0000	2710	EM bank write for bank 0 to 6
		A0 to A6			
		98	0000	2710	EM current bank write

CS1-CPU65

Command code		Memory area code	Offset	Size	Application
01	01	80	0000	09FC	CIO Area read
		B0	0000	1800	
		B2	0000	0200	HR Area read
		80	0B00	03C0	Auxiliary Area read
		B3	0000	03C0	
		01	0000	0800	Timer/counter Completion Flag read
			0800	0800	
		09	0000	0800	
			8000	0800	
		81	0000	0800	Timer/counter PV read
			0800	0800	
		89	0000	0800	
			8000	0800	
		82	0000	2710	DM Area read
		90 to 92	0000	2710	EM bank read for bank 0 to 2
		A0 to A2			
		98	0000	2710	EM current bank read
	02	80	0000	09FC	CIO Area write
		B0	0000	1800	
		B2	0000	0200	HR Area write
		80	0B00	03C0	AR Area write
		B3	0000	03C0	
		81	0000	0800	Timer/counter PV write
			0800	0800	
		89	0000	0800	
			8000	0800	
		82	0000	2710	DM Area write
		90 to 92	0000	2710	EM bank write for bank 0 to 2
		A0 to A2			
		98	0000	2710	EM current bank write

CS1-CPU43/42

Command code		Memory area code	Offset	Size	Application
01	01	80	0000	09FC	CIO Area read
		B0	0000	1800	
		B2	0000	0200	HR Area read
		80	0B00	03C0	Auxiliary Area read
		B3	0000	03C0	
		01	0000	0800	Timer/counter Completion Flag read
			0800	0800	
		09	0000	0800	
			8000	0800	
		81	0000	0800	Timer/counter PV read
			0800	0800	
		89	0000	0800	
			8000	0800	
		82	0000	2710	DM Area read
	02	80	0000	09FC	CIO Area write
		B0	0000	1800	
		B2	0000	0200	HR Area write
		80	0B00	03C0	AR Area write
		B3	0000	03C0	
		81	0000	0800	Timer/counter PV write
			0800	0800	
		89	0000	0800	
			8000	0800	
		82	0000	2710	DM Area write

12-4-5 RUN: 04 01

Changes the CPU Unit's operating mode to DEBUG, MONITOR or RUN, starting execution of the program in the PLC.

Command Format

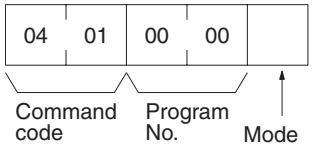

Response Format

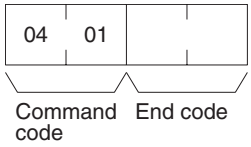

Parameters

Program No. and Mode (command)

Refer to the *FINS Commands Reference Manual* (W227) for details on the program number and mode.

End code (response)

Refer to *19-1 Troubleshooting with FINS End Codes* for information on end codes.

12-4-6 STOP: 04 02

Changes the CPU Unit's operating mode to PROGRAM, stopping program execution.

Command Format

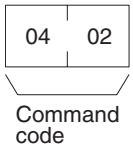

Response Format

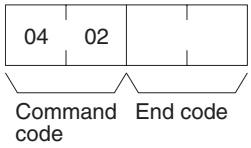

Parameters

End code (response)

Refer to *19-1 Troubleshooting with FINS End Codes* for information on end codes.

12-4-7 CONTROLLER DATA READ: 05 01

Reads the model of the PLC.

Command Format

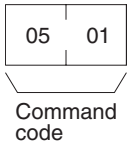

Response Format

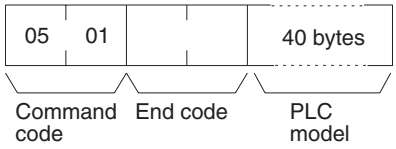

Parameters

PLC model (response)

The model is returned in not more than 40 bytes in ASCII (i.e., 40 ASCII characters). If the model or version requires less than 40 characters, spaces will be inserted to fill the remainder.

The following stings will be returned.
C250
C500
C120/C50
C250F
C500F
C120F
C2000
C1000H
C2000H/CQM1/CPM1/CPM1A/SRM1
C20H/C28H/C40H/C200H/C200HS/C200HX/HG/HE
C1000HF
CV500
CV1000
CV2000

CS1
CJ1
CVM1-CPU01
CVM1-CPU11
CVM1-CPU21
SYSMAC WAY PLC-

The last string will be returned for all PLCs not listed above.

End code (response)

Refer to *19-1 Troubleshooting with FINS End Codes* for information on end codes.

12-4-8 CONTROLLER STATUS READ: 06 01

Reads the operating status of the controller.

Command Format

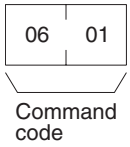

Response Format

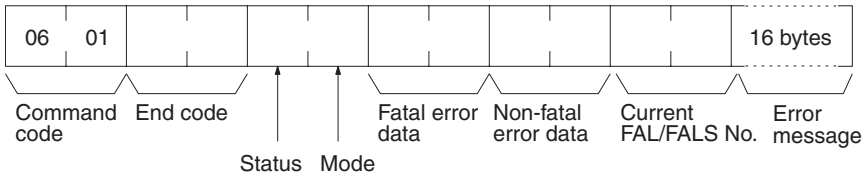

Parameters

Refer to the *FINS Commands Reference Manual* (W227) for details on parameters.

Fatal error data (response)

Only the following fatal error data is supported.

FALS error
Program error (no END instruction)
I/O bus error
JMP error
Memory error
I/O setting error
I/O point overflow

Non-fatal error data (response)

Only the following non-fatal error data is supported.

FAL error
Battery error
Cycle time over
I/O verification error

End code (response)

Refer to *19-1 Troubleshooting with FINS End Codes* for information on end codes.

12-4-9 LOOPBACK TEST: 08 01

Executes a loopback test with the specified node (i.e., the CPU Unit or Host Link Unit).

Command Format

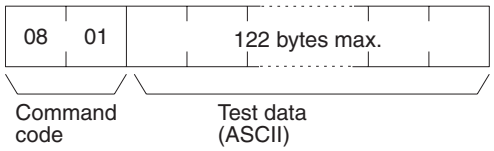

Response Format

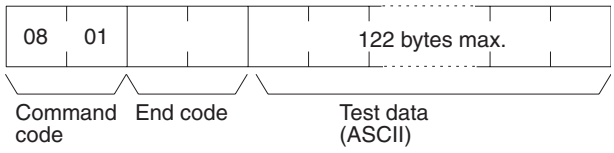

Parameters

Test data (command and response)

In the command block, designate the data to be transmitted to a specified node. Up to 122 bytes of data can be designated. In the response block, the test data from the command block will be returned as it is. If the test data in the response block is different from that in the command block, an error has occurred.

An error will occur if the test data is not ASCII.

End code (response)

Refer to *19-1 Troubleshooting with FINS End Codes* for information on end codes.

12-4-10 FILE MEMORY INDEX READ: 22 0F

Reads the File Memory index for the specified number of blocks from the specified beginning block number. This command is valid for the C1000H, C1000HF, and C2000H only.

Command Block

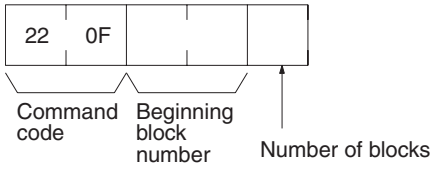

Response Block

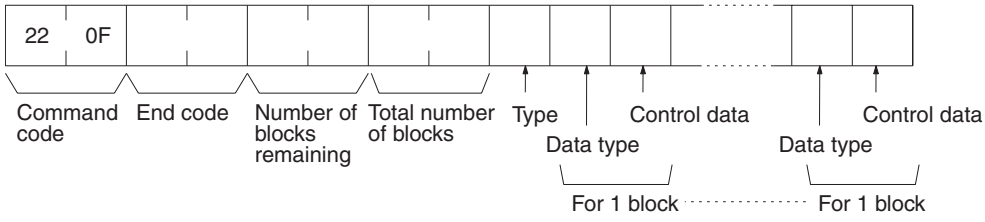

Parameters

Refer to the *FINS Commands Reference Manual* (W227) for details on parameters.

Beginning block number (command)

The first block can be 0000 to 07CF (0 to 1999 decimal);

Number of blocks (command)

The number of blocks can be 01 to 80 (0 to 128 decimal).

Number of blocks remaining (response)

The number of blocks not to be read can be 0000 to 07D0 (0 to 2,000 decimal).

Total number of blocks (response)

The total number of blocks in File Memory can be 0000, 03E8, or 07D0 (0, 1,000, or 2,000 in decimal, respectively).

End code (response)

Refer to *19-1 Troubleshooting with FINS End Codes* for information on end codes.

12-4-11 FILE MEMORY READ: 22 10

Reads the contents of the specified File Memory block. This command is valid for the C1000H, C1000HF, and C2000H only.

Command Block

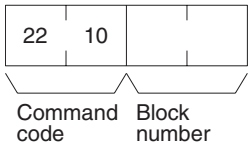

Response Block

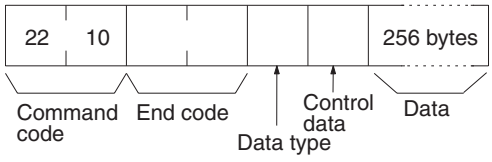

Parameters

Refer to the *FINS Commands Reference Manual* (W227) for details on parameters.

Block number (command)

The File Memory block to read can be between 0000 and 07CF (0 and 1,999 decimal).

End code (response)

Refer to *19-1 Troubleshooting with FINS End Codes* for information on end codes.

12-4-12 FILE MEMORY WRITE:22 11

Writes the specified contents to the specified File Memory block. This command is valid for the C1000H, C1000HF, and C2000H only.

Command Block

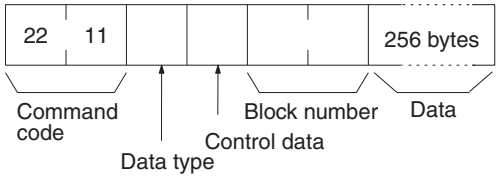

Response Block

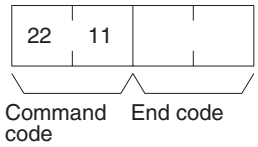

Parameters

Refer to the *FINS Commands Reference Manual* (W227) for details on parameters.

Block number (command)

The File Memory block to write can be between 0000 and 07CF (0 and 1,999 decimal).

Data (command)

Specify the contents for the specified File Memory block using 256 bytes (128 words).

End code (response)

Refer to *19-1 Troubleshooting with FINS End Codes* for information on end codes.

12-4-13 FORCED SET/RESET: 23 01

Force-sets (ON) or force-resets (OFF) bits/flags. Bits/flags that are forced ON or OFF will remain ON or OFF and cannot be written to until the forced status is released.

Command Format

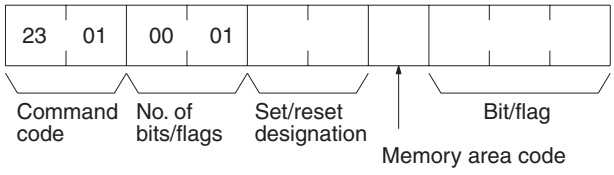

Response Format

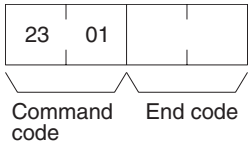

Parameters

Refer to the *FINS Commands Reference Manual* (W227) for details on parameters.

Number of bits/flags (command)

The number of bits/flags to be set/reset is always 0001.

Set/reset designation (command)

Specify the action to be taken for the bit/flag.

Value (hex)	Name	Operation
0000	Forced reset	Turns OFF (0) the bit/flag and places it in forced status.
0001	Forced set	Turns ON (1) the bit/flag and places it in forced status.

End code (response)

Refer to *19-1 Troubleshooting with FINS End Codes* for information on end codes.

12-4-14 FORCED SET/RESET CANCEL: 23 02

Cancels all bits (flags) that have been forced ON or forced OFF.

Command Format

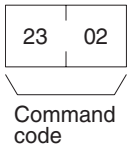

Response Format

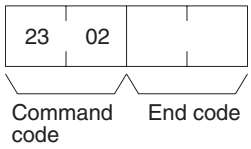

Parameters

Refer to the to the *FINS Commands Reference Manual* (W227) for details on end codes.

12-4-15 FINS Commands for the SYSWAY CV Protocol

Refer to the *FINS Commands Reference Manual* (W227) for details on FINS commands for the SYSWAY CV protocol.

Note The maximum data length (from the beginning of the command code to the end of the text) is 542 bytes.

12-4-16 FINS Commands for the CompoWay/F Protocol

The commands that can be used depend on the CompoWay/F component. Refer to the operation manuals for the components.

Conversion between FINS and CompoWay/F

Normal Conversion

The Open Network Controller converts all FINS commands to text to create CompoWay/F frames. The responses from CompoWay/F devices are then converted to FINS responses. An example is shown below.

FINS command: 0x0101800000000001
CompoWay/F: 0x30313031383030303030303030303031
(“0101800000000001” in ASCII)
Here, only the FINS-mini command text portion is shown.

The conversion methods for LOOPBACK TEST (08 01) and TEXT STRING WRITE (41 02), however, are different.

LOOPBACK TEST (08 01) Conversion

Only the command code (08 01) is converted to ASCII and the rest of the data is placed in the CompoWay/F frame without conversion (i.e., as binary data).

FINS command: 0x08011234567890
CompoWay/F: 0x303830311234567890
(“0801” in ASCII followed by 1234567890)
Here, only the FINS-mini command text portion is shown.

TEXT STRING WRITE (41 02) Conversion

Only the command code (41 02), beginning write address (2 bytes), and the number of elements (2 bytes) are converted to ASCII and the rest of the data is placed in the CompoWay/F frame without conversion (i.e., as binary data).

FINS command: 0x4102000000011234567890
CompoWay/F: 0x343130323030303030303030311234567890
(“410200000001” in ASCII followed by 1234567890)
Here, only the FINS-mini command text portion is shown.

12-5 FINS Commands Addressed to the ID Controller

This section describes the uses of FINS commands that can be addressed to the ID Controller.

12-5-1 FINS Commands

The following FINS commands can be addressed to the ID Controller.

Command code	Name
01 01	MEMORY AREA READ
01 02	MEMORY AREA WRITE
02 02	DATA MANAGEMENT COMMAND EXECUTE Checks Data Carrier memory or manages the number of times memory (EEPROM) has been rewritten.
04 02	AUTO COMMAND PROCESSING CANCEL
08 01	LOOPBACK TEST
0B 01	ABORT
32 25	ID CONTROLLER COMMUNICATIONS COMMAND EXECUTE

12-5-2 List of ID Controller Communications Commands

The following table lists the supported ID Controller communications commands.

ID command	Name	FINS command	Addressable range
RD	READ	0x0101, 0x3225	0000 to 1FFF
WT	WRITE	0x0102, 0x3225	0002 to 1FFF
AR	AUTO READ	0x3225, 0x0101	0000 to 1FFF
AW	AUTO WRITE	0x3225, 0x0102	0002 to 1FFF
PR	POLLING AUTO READ	0x3225	0000 to 1FFF
PW	POLLING AUTO WRITE	0x3225	0002 to 1FFF
AA	AUTO COMMAND PROCESSING CANCEL	0x0402, 0x3225	---
MD	DATA MANAGEMENT COMMAND	0x0202, 0x3225	---
TS	TEST	0x0801, 0x3225	---
XZ	ABORT	0x0B01	---
IC	RESPONSE TO UNDEFINED COMMAND	Response (04 01)	---

12-5-3 MEMORY AREA READ: 01 01

Reads the contents of the specified number of consecutive memory area words starting from the specified word.

Command Format

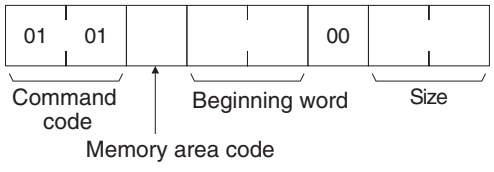

Response Format

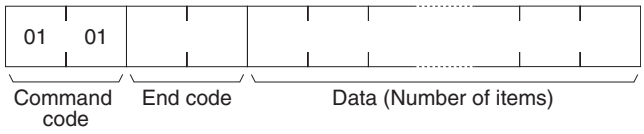

Parameters

Memory area code, beginning word, size (command)

The memory area code is always 40. Specify the beginning word (bits are always 00) of the data to read, and the number of bytes (between 0001 and 0080) to read.

The FINS commands will be converted to ID Controller commands, as shown in the following table.

Non_Block=0

FINS command				ID command			
Memory area code	Address	Bit	Size (bytes)	Header	Code	Begin-ning word	Read bytes
40	0000 to 1FFF	Always 00	0001 to 0080	RD	H	0000 to 1FFF	00 to 80

Non_Block=1

FINS command				ID command			
Memory area code	Address	Bit	Size (bytes)	Header	Code	Begin-ning word	Read bytes
40	0000 to 1FFF	Always 00	0001 to 0080	AR	H	0000 to 1FFF	00 to 80

Data (response)

The data from the specified memory area is returned in sequence starting from the beginning word.

End code (response)

Refer to *19-1 Troubleshooting with FINS End Codes* for information on end codes.

12-5-4 MEMORY AREA WRITE: 01 02

Writes the contents of the specified number of consecutive memory area words starting from the specified word.

Command Format

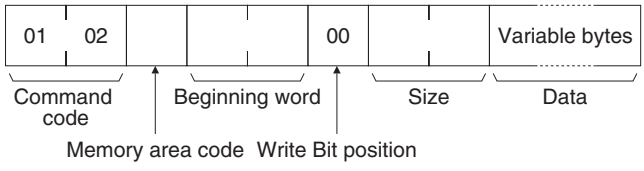

Response Format

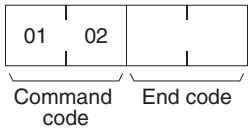

Parameters

Memory area code, beginning word, size (command)

The memory area code is always 40. Specify the beginning word (bits are always 00) of the data to be read, and the number of bytes (between 0001 and 0080) to be read.

The FINS commands will be converted to ID Controller commands, as shown in the following table.

Non_Block=0

FINS command				ID command		
Memory area code	Address	Bit	Size (bytes)	Header	Code	Beginning word
40	0002 to 1FFF	Always 00	0001 to 0080	WT	H	0002 to 1FFF

Non_Block=1

FINS command				ID command		
Memory area code	Address	Bit	Size (bytes)	Header	Code	Beginning word
40	0002 to 1FFF	Always 00	0001 to 0080	AW	H	0002 to 1FFF

Data (command)

The data to be written to the specified memory area is provided in sequence starting from the beginning word.

End code (response)

Refer to *19-1 Troubleshooting with FINS End Codes* for information on end codes.

12-5-5 DATA MANAGEMENT COMMAND EXECUTE

Checks Data Carrier memory or manages the number of times memory (EEPROM) has been rewritten.

Command Format

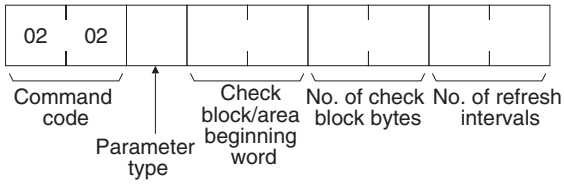

Response Format

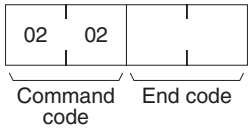

Parameters

Parameter type (command)

Specify the function according to the type of parameter used.

Check block beginning word, number of check block bytes, data (command)

Specify the beginning word (first word) of the check block, and the number of check block or data bytes.

Parameter type	Function	Check block beginning word	No. of check block bytes	No. of refresh intervals
01	C	0000 to FFFD	0001 to 0100	Always 0000
02	K	0000 to FFFD	0001 to 0100	Always 0000

Note

1. If the parameter type is set to 01 or 02, and the number of check block bytes is set to 0100, the ID Controller management data will be 00 (256 bytes).
2. For details on the functions, refer to the *ID Controller Operation Manual*.

Parameter type	Function	Area beginning word	No. of check block bytes	No. of refresh intervals
03	S	□□□□0 to □□□□5, □□□□8 to □□□□D	Always 0000	0000 to 00FF
04	L	□□□□0 to □□□□5, □□□□8 to □□□□D	Always 0000	0000 to 00FF

End code (response)

Refer to *19-1 Troubleshooting with FINS End Codes* for information on end codes.

12-5-6 AUTO COMMAND PROCESSING CANCEL: 04 02

Cancels the auto command (AUTO READ or AUTO WRITE) that is waiting for a response during auto command processing, and restores the command wait state.

Command Format

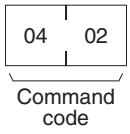

Response Format

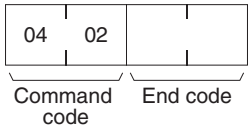

Parameters

End code (response)

Refer to *19-1 Troubleshooting with FINS End Codes* for information on end codes.

12-5-7 LOOPBACK TEST: 08 01

Executes a loopback test with ID Controller.

Command Format

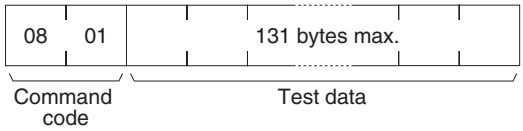

Response Format

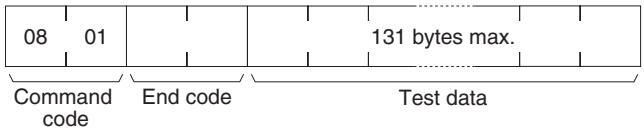

Parameters

Test data (command and response)

In the command block, designate the data to be transmitted to the ID Controller. The response block returns the same test data from the command block. If the test data in the response block is different from that in the command block, an error has occurred.

End code (response)

Refer to *19-1 Troubleshooting with FINS End Codes* for information on end codes.

12-5-8 ABORT: 0B 01

Restores the ID Controller to command wait state when a response is not returned from the ID Controller due to a problem in host or local communications.

Command Format

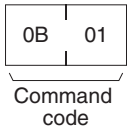

Response Format No response is returned.

12-5-9 ID CONTROLLER COMMUNICATIONS COMMAND EXECUTE: 32 25

Executes the POLLING AUTO commands and other ID Controller communications commands.

Command Format

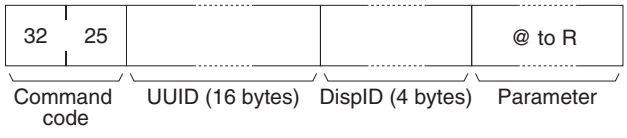

Response Format

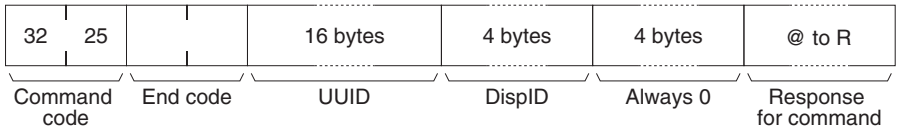

Parameters

Parameter (command)

Specify the ID Controller command to be executed. Refer to the *ID Controller Operation Manual* for details on commands.

UUID (command, response)

The ID Controller ID is always 012A84878AA411d3B7820000F4909DE4.

DispID (command, response)

Always 00000004.

Response for command (response)

The response for the ID Controller command is returned.

End code (response)

Refer to *19-1 Troubleshooting with FINS End Codes* for information on end codes.

12-5-10 FINS End Codes for the ID Controller

The following table lists the FINS end codes for ID Controllers.

Type	ID end code	FINS		Meaning	
		MRC	SRC	ID Controller	FINS
During normal operation	00	00	00	Normal end code	Normal end
	7B	00	7B	Low battery voltage warning	(Undefined)
	74	00	74	Command received, data carrier not close	(Undefined)
	75	00	75	Command auto processing canceled	(Undefined)
	76	00	76	Command auto processing canceled	(Undefined)
Error in communications with host computer	10	03	01	Parity error	Communications controller error
	11	03	01	Framing error	Communications controller error
	12	03	01	Overrun error	Communications controller error
	13	03	01	FCS error, horizontal parity error	Communications controller error
	14	10	04	Command input error	Command format error
	18	10	01	Frame length maximum error	Command too long
Local communications errors	70	02	06	Data carrier communications error	(Undefined)
	71	20	07	Mismatch error	Verification error
	72	23	01	Data carrier not present	No file device
	7A	11	04	Address to high	Address out of range
	7C	03	01	R/W Head not connected	Communications controller error
	7D	21	01	Write protect error	Read only
Data carrier	75	00	75	Normal end code returned (with no error) after data check command or MDL command was executed	(Undefined)
	76	00	76	Error code returned after data check command or MDL command was executed	(Undefined)

Type	ID end code	FINS		Meaning	
		MRC	SRC	ID Controller	FINS
System errors	90	40	01	Power disconnection during command processing	Out of service
	91	40	01	Power disconnection during write processing	Out of service
	92	03	01	CPU error	Communications controller error
	93	03	01	Memory error	Communications controller error

12-6 FINS Commands Addressed to TP700 Productivity Monitors

This section describes how to use FINS commands that can be addressed to the TP700 Productivity Monitor.

12-6-1 FINS Commands

The following FINS command can be addressed to the ID Controllers that support the TP700 Productivity Monitor.

Command code	Name
01 01	MEMORY AREA READ

12-6-2 List of TP700 Communications Commands

FINS command	Memory area code	Function/measurement	Requested data type
01 01	40	All measured values	0
	41	Non-programmable total power	1
	42	Programmable total power	2
	43	Instantaneous power	3
	44	Instantaneous voltage	4
	45	Instantaneous current	5
	46	Power factor and instantaneous current	6

Note Refer to the *TP700 Productivity Monitor Operation Manual* for details on the functions/measured values, and requested data types.

12-6-3 MEMORY AREA READ: 01 01

Reads the contents of the specified number of consecutive words starting from the specified word.

Command Format

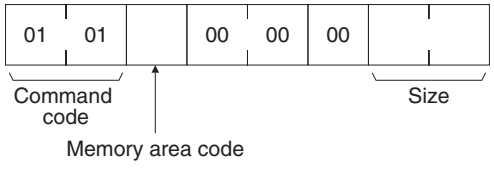

Response Format

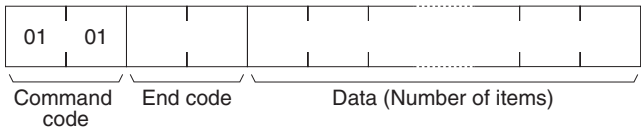

Parameters

Memory area code, size (command)

Specify the requested data type (0 to 6) in the memory area code (the setting range is between 40 and 46; refer to the following table). Specify the number of bytes to be read according to the size of the requested data (refer to the following table).

The FINS commands will be converted to Productivity Monitor commands, as shown in the following table.

FINS command		TP700 command	
Memory area code	**Size**	**Requested data code**	**Function/measurement**
40	002E/0030 (See note 1.)	0	All measured values
41	0005	1	Non-programmable total power
42	000A	2	Programmable total power
43	0009	3	Instantaneous power
44	0008	4	Instantaneous voltage
45	0008	5	Instantaneous current
46	0006/0008 (See note 1.)	6	Power factor and instantaneous current

Note These byte sizes are for TP700-B□□□1/TP700-B□□□2 Productivity Monitors, respectively.

Data (response)

The TP700 response data is converted to FINS response data and returned, as follows:

The TP_mode setting in FgwQnxHlk.ini determines whether the FINS response data is ASCII or BCD.

TP_mode=0: ASCII

TP_mode=1: BCD

■ **Requested Data Type=0**

All data is returned, except for data with the requested data type 0. The details of data conversion are provided below.

■ **Requested Data Type=1**

Display: □□□□□kWh (5-digit display)

TP700 response (ASCII): 5 bytes

X_1	X_2	X_3	X_4	X_5

Data range: 00000 to 99999 [kWh]

FINS response (binary): 5 bytes

TP_mode=0

XX	XX	XX	XX	XX

Data range: 30 30 30 30 30 to 39 39 39 39 39

TP_mode=1

X_1X_2	X_3X_4	X_50	00	00

Data range: 00 00 00 00 00 to 99 99 90 00 00

■ **Requested Data Type=2**

Display: □□□□□Wh + □□□□□Wh (5-digit display + 5-digit display)

TP700 response (ASCII): 10 bytes

X_1	X_2	X_3	X_4	X_5	X_6	X_7	X_8	X_9	X_{10}

Data range: 0000000000 to 9999999999 [Wh]

FINS response (binary): 10 bytes

TP_mode=0

XX	XX	XX	XX	XX	XX	XX	XX	XX	XX

Data range: 30 30 30 30 30 30 30 30 30 30 to 39 39 39 39 39 39 39 39 39 39

TP_mode=1

X_1X_2	X_3X_4	X_5X_6	X_7X_8	X_9X_{10}	00	00	00	00	00

Data range: 00 00 00 00 00 00 00 00 00 00 to 99 99 99 99 99 00 00 00 00 00

■ **Requested Data Type=3**

Display contents: ±□□□.□Wh to ±□□□□kWh (4 valid digits).

TP700 response (ASCII): 9 bytes

±	X_1	.	X_2	X_3	X_4	E	+	X_5

Data range: -9.999E+6 to 9.999E+6 (-9999000 to 9999000) [Wh]

Minimum resolution: 0.1 W

FINS response (binary): 9 bytes

TP_mode=0

2B/2D	XX	2E	XX	XX	XX	45	2B	XX

Data range: 2D 39 2E 39 39 39 45 2B 39 to 2B 39 2E 39 39 39 45 2B 39

TP_mode=1

$0X_1/8X_1$	X_2X_3	X_4X_5	00	00	00	00	00	00

Data range: 89 99 96 00 00 00 00 00 00 to 09 99 96 00 00 00 00 00 00

First byte: Uppermost bit OFF + (positive)
Uppermost bit ON + (negative)

■ **Requested Data Type=4**

Display: □□□.□V to □□□□kV (4 valid digits)

TP700 response (ASCII): 8 bytes

X_1	.	X_2	X_3	X_4	E	+	X_5

Data range: 0.000E+2 to 9.999E+6 (000.0 to 9999000) [V]

Minimum resolution: 0.1 V

FINS response (binary): 8 bytes

TP_mode=0

XX	2E	XX	XX	XX	45	2B	XX

Data range: 30 2E 30 30 30 45 2B 32 to 39 2E 39 39 39 45 2B 36

TP_mode=1

X_1X_2	X_3X_4	X_50	00	00	00	00	00

Data range: 00 00 20 00 00 00 00 00 to 99 99 60 00 00 00 00 00

■ **Requested Data Type=5**

Display: □.□□□A to □□□□kA (4 valid digits)

TP700 response (ASCII): 8 bytes

X_1	.	X_2	X_3	X_4	E	+	X_5

Data range: 0.000E+1 to 9.999E+3 (0.000 to 9999) [A]
Minimum resolution: 0.001 A

FINS response (binary): 8 bytes

TP_mode=0

XX	2E	XX	XX	XX	45	2B	XX

Data range: 30 2E 30 30 30 45 2B 31 to 09 2E 39 39 39 45 2B 33

TP_mode=1

X_1X_2	X_3X_4	X_50	00	00	00	00	00

Data range: 00 00 00 00 00 00 00 00 to 99 99 90 00 00 00 00 00

■ **Requested Data Type=6 (TP700-B□□□1)**

Display: G□.□□□ to 1.000 to D□.□□□ (4 valid digits)

TP700 response (ASCII): 6 bytes

D/G	X_1	.	X_2	X_3	X_4

Data range: D0.000 to D9.999
G0.000 to G9.999

FINS response (binary): 6 bytes

TP_mode=0

44/47	XX	2E	XX	XX	XX

Data range: 44 30 2E 30 30 30 to 44 39 2E 39 39 39

TP_mode=1

44/47	X_1X_2	X_3X_4	00	00	00

Data range: 47 30 2E 30 30 30 to 44 39 2E 39 39 39

■ **Requested Data Type=6 (TP700-B□□□2)**

Display: □.□□□ A to □.□□□ kA (4 valid digits)

TP700 response (ASCII): 8 bytes

X_1	.	X_2	X_3	X_4	E	+	X_5

Data range: 0.000E+1 to 9.999E+3 (0.000 to 9999) [A]
Minimum resolution: 0.001 A

FINS response (binary): 8 bytes

TP_mode=0

XX	2E	XX	XX	XX	45	2B	XX

Data range: 30 2E 30 30 30 45 2B 31 to 39 2E 39 39 39 45 2B 33

TP_mode=1

X_1X_2	X_3X_4	$X_5$0	00	00	00	00	00

Data range: 00 00 10 00 00 00 00 00 to 99 99 30 00 00 00 00 00

12-6-4 List of End Codes for the TP700 Productivity Monitor

The only FINS end codes for the TP700 Productivity Monitor are 0x0000 (normal end) and 0x0205 (response timeout). A communications error will occur when a normal response is not received within 300 ms, and 0x0205 (response timeout) will be returned.

12-7 FINS Commands Addressed to TP710 Productivity Monitor

This section explains the FINS commands that can be addressed to the TP710 Productivity Monitor.

12-7-1 FINS Commands

The following FINS command can be addressed to the ID Controllers that support the TP710 Productivity Monitor.

Command code	Name
01 01	MEMORY AREA READ
01 02	MEMORY AREA WRITE

12-7-2 List of TP710 Communications Commands

FINS command	Function	Processing
01 01	A	Measuring item (category A)
01 01	B	Statistical item (category B)
01 01, 01 02	C	Setting item (category C)

FINS command	Function	Processing
01 01, 01 02	D	User data (category D)
01 01, 01 02	E	User control data (category E)

Note For details on functions and processing, refer to the *TP710 Operation Manual*.

12-7-3 MEMORY AREA READ: 01 01

Reads the contents of the specified number of consecutive words starting from the specified word in memory.

Command Format

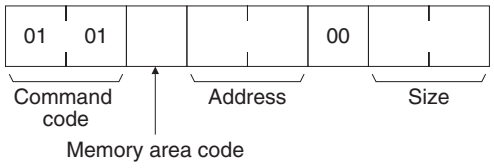

Response format

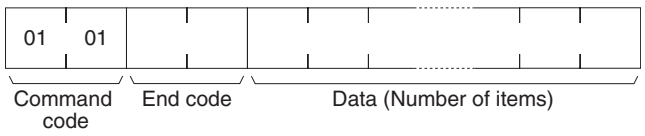

Parameters

Memory area code, beginning word, size (command)

Specify the category (A to E) in the memory area code (40 to 44). Set the address to begin reading data (this actually sets the data number from 0 to 9.) Specify the number of bytes to be read, according to the category and data. Refer to the following table for details.

The FINS commands will be converted to Productivity Monitor AP commands, as shown in the following table.

Note The AP command column in the following table indicates (left to right) R/W, category, and Data number.

Memory area code	Address	Size	AP command	Measurement/Function
40	0000	003A	RA0	Simultaneous transfer (Wh, P, V, I, Q, η)
40	0040	0008	RA1	Integral power amount Wh
40	0050	000A	RA2	Power P
40	0060	000A	RA3	Voltage Vrms
40	0070	000A	RA4	Current Irms
40	0080	000A	RA5	Unavailable power Q
40	0090	000A	RA8	Total wave distrortion ration η
40	00A0	0014	RA9	P&Q
41	0000	002D	RB0	Time T + average power P + Time T + average voltage V + Time T + average current I
41	0030	002D	RB1	Time Tp + minimum power P + Time Tv + minimum voltage V + Time Ti + minimum current I
41	0060	002D	RB2	Time Tp + maximum power P + Time Tv + maximum voltage V + Time Ti + maximum current I
42	0000	0008	RC0	PT ratio
42	0010	0008	RC1	CT ratio

Memory area code	Address	Size	AP command	Measurement/Function
42	0020	0008	RC2	Pulse width
42	0030	0008	RC3	Pulse weight
43	0000	0008	RD0	User settings
43	0010	0008	RD1	
43	0020	0008	RD2	
43	0030	0008	RD3	
43	0040	0008	RD4	
43	0050	0008	RD5	
43	0060	0008	RD6	
43	0070	0008	RD7	
43	0080	0008	RD8	
43	0090	0008	RD9	
44	0000	0001	RE0	Integration start
44	0010	0001	RE1	Statistical reset
44	0020	0001	RE2	Remote reset
44	0030	0001	RE3	Wh initialization
44	0040	0001	RE4	Error status 1
44	0050	0001	RE5	Error status 2
44	0060	0001	RE6	Error counter 2

Data (response)

The TP710 response data is converted to FINS response data and returned, as follows:

The TP_mode setting in FgwQnxHlk.ini determines whether the FINS response data is ASCII or BCD.

TP_mode=0: ASCII

TP_mode=1: BCD

Category A

■ **Data Number=0**

All the data from data number 1 to 9 is returned. The conversion details are shown below.

■ **Data Number=1**

TP710 response (ASCII): 8 bytes

X_1	X_2	X_3	X_4	X_5	X_6	X_7	X_8

FINS response (binary): 8 bytes

TP_mode=0

XX	XX	XX	XX	XX	XX	XX	XX

Data range: 30 30 30 30 30 30 30 30 to 39 39 39 39 39 39 39 39

TP_mode=1

X_1X_2	X_3X_4	X_5X_6	X_7X_8	00	00	00	00

Data range: 99 99 99 99 00 00 00 00 to 99 99 99 99 00 00 00 00

■ **Data Number=2, 3, 4, 5, 8**

TP710 response (ASCII): 10 bytes

±	X_1	.	X_2	X_3	X_4	X_5	E	±	X_6

FINS response (binary): 10 bytes

TP_mode=0

2B/2D	XX	2E	XX	XX	XX	XX	45	2B/2D	XX

Data range: 2D 39 2E 39 39 39 39 45 2D 39 to 2B 39 2E 39 39 39 39 45 2B 39

TP_mode=1

$0X_1/8X_1$	X_2X_3	X_4X_5	$0X_6/8X_6$	00	00	00	00	00	00

Data range: 99 99 99 99 00 00 00 00 to 99 99 99 99 00 00 00 00

First byte: Highest bit OFF + (positive)

Highest bit ON - (negative)

Fourth byte: Highest bit OFF + (positive)

Highest bit ON - (negative)

■ **Data Number=9**

TP710 response (ASCII): 20 bytes

±	X_1	.	X_2	X_3	X_4	X_5	E	±	X_6	±	X_7	.	X_8	X_9	X_{10}	X_{11}	E	±	X_{12}

FINS response (binary): 20 bytes

TP_mode=0

2B/2D	XX	2E	XX	XX	XX	XX	45	2B/2D	XX

2B/2D	XX	2E	XX	XX	XX	XX	45	2B/2D	XX

TP_mode=1

$0X_1/8X_1$	X_2X_3	X_4X_5	$0X_6/8X_6$	$0X_7/8X_7$	X_8X_9	$X_{10}X_{11}$	$0X_{12}/8X_{12}$	00	00

00	00	00	00	00	00	00	00	00	00

First byte:	Highest bit OFF	+ (positive)
	Highest bit ON	– (negative)
Fourth byte:	Highest bit OFF	+ (positive)
	Highest bit ON	– (negative)
Fifth byte:	Highest bit OFF	+ (positive)
	Highest bit ON	– (negative)
Eighth byte:	Highest bit OFF	+ (positive)
	Highest bit ON	– (negative)

Category B

■ **Data Number=0, 1, 2**

TP710 response (ASCII): 45 bytes

X_1	X_2	X_3	X_4	X_5	±	X_6	.	X_7	X_8	X_9	X_{10}	E	±	X_{11}
X_{12}	X_{13}	X_{14}	X_{15}	X_{16}	±	X_{17}	.	X_{18}	X_{19}	X_{20}	X_{21}	E	±	X_{22}
X_{23}	X_{24}	X_{25}	X_{26}	X_{27}	±	X_{28}	.	X_{29}	X_{30}	X_{31}	X_{32}	E	±	X_{33}

FINS response (binary): 45 bytes

TP_mode=0

XX	XX	XX	XX	XX	2B/2D	XX	2E	XX	XX
XX	XX	45	2B/2D	XX	XX	XX	XX	XX	XX
2B/2D	XX	2E	XX	XX	XX	XX	45	2B/2D	XX
XX	XX	XX	XX	XX	2B/2D	XX	2E	XX	XX
XX	XX	45	2B/2D	XX					

TP_mode=1

X_1X_2	X_3X_4	X_50/X_58	X_6X_7	X_8X_9	$X_{10}0/X_{10}8$	$X_{11}X_{12}$	$X_{13}X_{14}$	$X_{15}X_{16}$	$0X_{17}/8X_{17}$
$X_{18}X_{19}$	$X_{20}X_{21}$	$0X_{22}/8X_{22}$	$X_{23}X_{24}$	$X_{25}X_{26}$	$X_{27}0/X_{27}8$	$X_{28}X_{29}$	$X_{30}X_{31}$	$X_{32}0/X_{32}8$	$X_{33}0$
00	00	00	00	00	00	00	00	00	00
00	00	00	00	00	00	00	00	00	00
00	00	00	00	00					

Third byte:	Lowest bit OFF	+ (positive)
	Lowest bit ON	– (negative)
Sixth byte:	Lowest bit OFF	+ (positive)
	Lowest bit ON	– (negative)
Tenth byte:	Highest bit OFF	+ (positive)
	Highest bit ON	– (negative)
Thirteenth byte:	Highest bit OFF	+ (positive)
	Highest bit ON	– (negative)

Sixteenth byte: Lowest bit OFF + (positive)

Lowest bit ON – (negative)

Nineteenth byte: Lowest bit OFF + (positive)

Lowest bit ON – (negative)

Category C

■ **Data Number=0**

TP710 command write (ASCII): 8 bytes

X_1	X_2	X_3	X_4	X_5	X_6	P	T

FINS command (binary): 8 bytes

TP_mode=0

XX	XX	XX	XX	XX	XX	50	54

TP_mode=1

X_1X_2	X_3X_4	X_5X_6	00	00	00	00	00

TP710 response (ASCII): 8 bytes

X_1	X_2	X_3	X_4	X_5	X_6	P	T

FINS response (binary): 8 bytes

TP_mode=0

XX	XX	XX	XX	XX	XX	50	54

TP_mode=1

X_1X_2	X_3X_4	X_5X_6	00	00	00	00	00

■ **Data Number=1**

TP710 command write (ASCII): 8 bytes

X_1	X_2	X_3	X_4	X_5	X_6	C	T

FINS command (binary): 8 bytes

TP_mode=0

XX	XX	XX	XX	XX	XX	43	54

TP_mode=1

X_1X_2	X_3X_4	X_5X_6	00	00	00	00	00

TP710 response (ASCII): 8 bytes

X_1	X_2	X_3	X_4	X_5	X_6	C	T

FINS response (binary): 8 bytes

TP_mode=0

XX	XX	XX	XX	XX	XX	43	54

TP_mode=1

X_1X_2	X_3X_4	X_5X_6	00	00	00	00	00

■ **Data Number=2**

TP710 command write (ASCII): 8 bytes

X_1	X_2	X_3	X_4	X_5	X_6	M	S

FINS command (binary): 8 bytes

TP_mode=0

XX	XX	XX	XX	XX	XX	4D	53

TP_mode=1

X_1X_2	X_3X_4	X_5X_6	00	00	00	00	00

TP710 response (ASCII): 8 bytes

X_1	X_2	X_3	X_4	X_5	X_6	M	S

FINS response (binary): 8 bytes

TP_mode=0

XX	XX	XX	XX	XX	XX	4D	53

TP_mode=1

X_1X_2	X_3X_4	X_5X_6	00	00	00	00	00

■ **Data Number=3**

TP710 command write (ASCII): 8 bytes

X_1	X_2	X_3	X_4	X_5	X_6	W	H

FINS command (binary): 8 bytes

TP_mode=0

XX	XX	XX	XX	XX	XX	57	48

TP_mode=1

X_1X_2	X_3X_4	X_5X_6	00	00	00	00	00

TP710 response (ASCII): 8 bytes

X_1	X_2	X_3	X_4	X_5	X_6	W	H

FINS response (binary): 8 bytes

TP_mode=0

XX	XX	XX	XX	XX	XX	57	48

TP_mode=1

X_1X_2	X_3X_4	X_5X_6	00	00	00	00	00

Category D

■ **Data Number=0 to 9**

TP710 command write (ASCII): 8 bytes

X_1	X_2	X_3	X_4	X_5	X_6	X_7	X_8

FINS command (binary): 8 bytes

TP_mode=0

XX	XX	XX	XX	XX	XX	XX	XX

TP_mode=1 (only for ASCII numbers)

X_1X_2	X_3X_4	X_5X_6	X_7X_8	00	00	00	00

TP710 response (ASCII): 8 bytes

X_1	X_2	X_3	X_4	X_5	X_6	X_7	X_8

FINS response (binary): 8 bytes

TP_mode=0

XX	XX	XX	XX	XX	XX	XX	XX

TP_mode=1 (only for ASCII numbers)

X_1X_2	X_3X_4	X_5X_6	X_7X_8	00	00	00	00

Category E

■ **Data Number=0 to 6**

TP710 command write (hexadecimal): 1 byte

X_1X_2

FINS command (binary): 1 byte

TP_mode=0, 1

X_1X_2

TP710 response (hexadecimal): 1 byte

X_1X_2

FINS response (binary): 2 bytes (1 word)

TP_mode=0, 1

X_1X_2

12-7-4 MEMORY AREA WRITE: 01 02

Writes the contents of the specified number of consecutive memory area words starting from the specified word.

Command Format

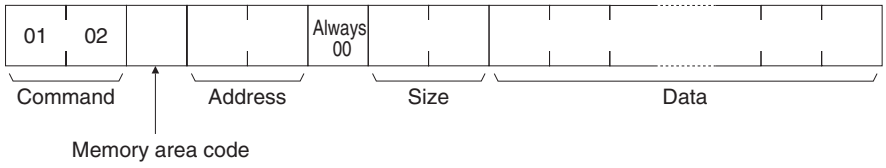

Response Format

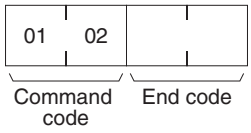

Parameters

Memory area code, address, size (command)

Specify the category (C to E) in the memory area code (42 to 44). Set the address to begin reading data (this actually sets the data number from 0 to 9.) Specify the number of bytes to be read, according to the category and data. Refer to the following table for details.

The FINS commands will be converted to Productivity Monitor AP commands, as shown in the following table.

Note The AP command column in the following table indicates (left to right) R/W, category, and data number. Refer to the *TP710 Productivity Monitor Operation Manual* for details on AP commands.

Memory area code	Address	Size	AP command	Measurement/ Function
42	0000	0008	WC0	PT ratio
42	0010	0008	WC1	CT ratio
42	0020	0008	WC2	Pulse width
42	0030	0008	WC3	Pulse weight
43	0000	0008	WD0	User settings
43	0010	0008	WD1	
43	0020	0008	WD2	
43	0030	0008	WD3	
43	0040	0008	WD4	
43	0050	0008	WD5	
43	0060	0008	WD6	
43	0070	0008	WD7	
43	0080	0008	WD8	
43	0090	0008	WD9	
44	0000	0001	WE0	Integration start

Memory area code	Address	Size	AP command	Measurement/ Function
44	0010	0001	WE1	Statistical reset
44	0020	0001	WE2	Remote reset
44	0030	0001	WE3	Wh initialization
44	0040	0001	WE4	Error status 1
44	0050	0001	WE5	Error status 2
44	0060	0001	WE6	Error counter 2

12-7-5 CONTROLLER STATUS READ: 06 01

Reads the Controller status (TP710 status).

Command Format

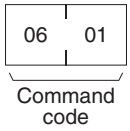

Response Format

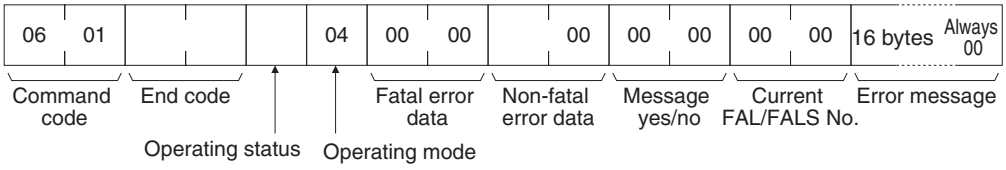

Note The mode is always 04 (RUN mode). The stop error data, message yes/no, current FAL/FALS No., and error message are all always 0.

Parameters

Operating status (response)

00: Measurement stopped

01: Measuring

Non-fatal error data (response)

The TP710 status is returned in the highest byte of the non-fatal error data response. The meaning of each bit is shown in the following table.

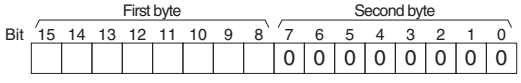

Bit	Meaning
15	Invalid command
14	Trouble
13	Setting error
12	Range other than P, V, I exceeded
11	I (practical current) range exceeded
10	V (practical voltage) range exceeded

Bit	Meaning
9	P (practical power) range exceeded
8	Measurement stopped

12-7-6 FINS End Codes for the TP710 Productivity Monitor

The FINS end codes for the TP710 Productivity Monitor are described here. The error responses for the TP710 commands return the TP710 status in the AP command status of the frame configuration. Multiple bits may be ON, so the FINS error response is provided with a priority level.

To obtain more details, use CONTROLLER STATUS READ (0x0601).

The TP710 status information is shown below.

The meaning of the TP710 status indicated in each bit that is returned is as follows (binary):

b7	b6	b5	b4	b3	b2	b1	b0
CMD_ERR	TROU-BLE	VAL_ERR	OVR	I_OVR	V_OVR	P_OVR	NO_P

b7: Invalid command

b6: Trouble

b5: Setting error

b4: Range exceeded other than P, V, I

b3: I (practical current) range exceeded

b2: V (practical voltage) range exceeded

b1: P (practical power) range exceeded

b0: Measurement stopped

Pri-ority	Bit posi-tion	FINS response		Meaning	
		MRC	SRC	TP710	FINS
High	All 0	00	00	Normal end code	Normal end code
↑	b6	03	01	Trouble	Communication Controller error
	b0	22	02	Measurement stopped	Stopped
	b5	11	0C	Setting error	Parameter error
	b4	11	0C	Range other than P, V, I exceeded	Parameter error
	b3	11	0C	I range exceeded	Parameter error
	b2	11	0C	V range exceeded	Parameter error
	b1	11	0C	P range exceeded	Parameter error
↓ Low	b7	04	01	Invalid command	Undefined command

If a normal response is not received within 300 ms, a communications error occurs, and 0x0205 (response timeout) is returned.

SECTION 13
Hsv_UNIT (PT Connection Service Network Provider)

This section describes the Hsv_UNIT PT connection service network provider (NP).

13-1 Hsv_UNIT (PT Connection Service) 252
13-1-1 PT Connection Service 252
13-1-2 Connectable PTs 252
13-1-3 Memory Areas for PTs 252
13-2 Connecting Cables for PT Connections 253
13-3 Setting the PT Connection Service 253
13-3-1 Setting Serial Ports 253
13-3-2 Setting Startup Services 254
13-3-3 Hsv (PT Connection) 254
13-3-4 Hsv UNIT 255
13-3-5 RUT 256
13-3-6 RUT UNIT 256

13-1 Hsv_UNIT (PT Connection Service)

13-1-1 PT Connection Service

The Hsv_HOST provides a service to connect PT (Programmable Terminals) to a COM port of the Open Network Connector (ONC). The Open Network Controller operates as a Host Link Unit for a virtual PLC and provides data memory (DM) and I/O memory (CIO) to the PT.

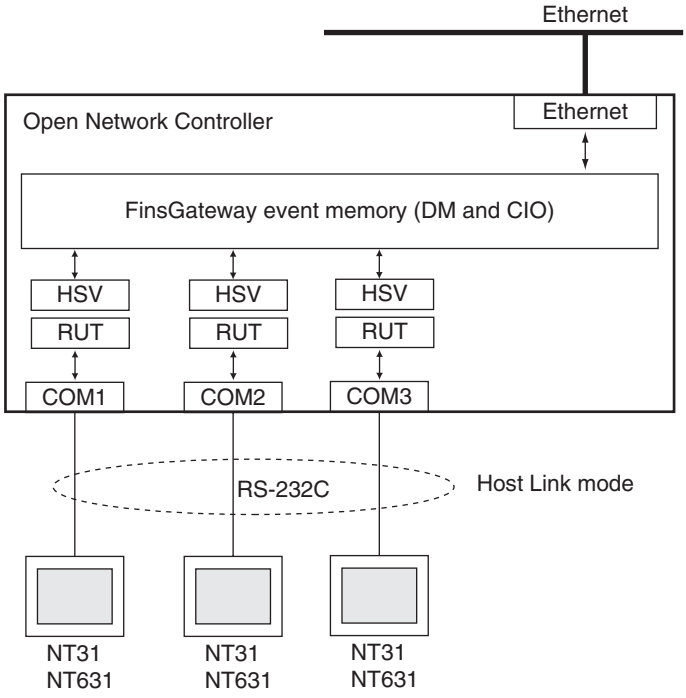

13-1-2 Connectable PTs

The following PTs can be connected to the Open Network Controller.

NT31C-ST141(B):	Color STN, LCD model
NT31-ST121(B):	Monochrome STN, LCD model
NT631C-ST141(B):	Color TFT, LCD model
NT631C-ST151(B):	Color STN, LCD model
NT631-ST211(B):	High contrast, EL model

Other PTs are not supported and their operation may not be stable.
Host Link mode is the only communications method that is supported.

13-1-3 Memory Areas for PTs

Only the following two memory areas can be set for PTs.

DM Area
CIO Area

If other memory areas (such as the TIM or AR Area) are set, an error will occur when communications are attempted. Refer to *13-3 Setting the PT Connection Service* for the setting method for each area.

13-2 Connecting Cables for PT Connections

Connect the COM1, COM2, or COM3 port on the Open Network Controller to port A on the PT, as shown in the following diagram.

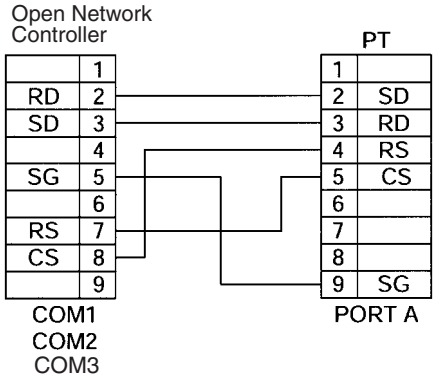

13-3 Setting the PT Connection Service

An Hsv□ and an RUT□ service must be set to use the PT connection service. If more than one PT is to be connected, then an Hsv□ and an RUT□ service must be set for each. Up to three PTs can be connected.

The Hsv□ and RUT□ must have the same number for the same connection.

For Hsv□, the PLC model code to be returned to the PT from the Open Network Controller must be set. For the RUT□, the network number, node number, and communications settings for the COM port allocated to RUT□ must be set.

Note The Hsv□ has a function that allows the Open Network Controller to emulate a PLC. In other words, the Open Network Controller will appear to be a CV1000, CS1-series, or other PLC from the device connected via a serial connection. The RUT□, like the CLK, SLK, and other network providers, operates as an HLK driver within the Open Network Controller.

13-3-1 Setting Serial Ports

To use the PT connection service, a COM port must be allocated to the RUT_UNIT in the serial port settings. In the default settings, COM1 is allocated to HLK0, COM2 is allocated to HLK1, COM3 is allocated to HLK2, and COM4 is allocated to HLK3. Refer to *4-8 Serial Port Settings* for details.

The following procedure is an example for setting COM1 to RUT0.

1,2,3...

1. Select ***Serial Ports*** from the Menu Window. The current settings will be displayed.
2. Set COM1 to RUT0, as shown below.

3. Click the **Write** Button.

13-3-2 Setting Startup Services

The Hsv□ and RUT□ services must be registered. Register one each for each PT that is to be used.

1,2,3...

1. Select ***Startup Services*** from the Menu Window. The Startup Service Setting Window will be displayed showing the current settings.
2. Select ***Hsv***□ in the Service Name Box and then click the **Create New** Button.
3. Select ***RUT***□ in the Service Name Box and then click the **Create New** Button.
   - Repeat the above two steps for each PT connection.
   - The following illustration shows how the settings should appear.

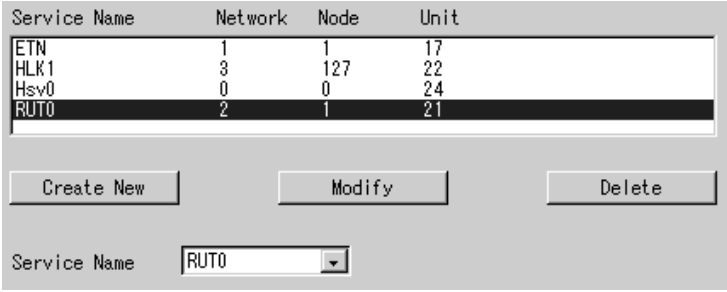

   The above example is for connecting one PT.
4. Click the **Write** Button.

Note Do not use the same network number as the one used for HLK_UNIT.

13-3-3 Hsv (PT Connection)

Use the following procedure to display the unit number of Hsv_UNIT.

Click ***Hsv (PT Connection)*** in the Menu Window. The following window will be displayed showing the current settings.

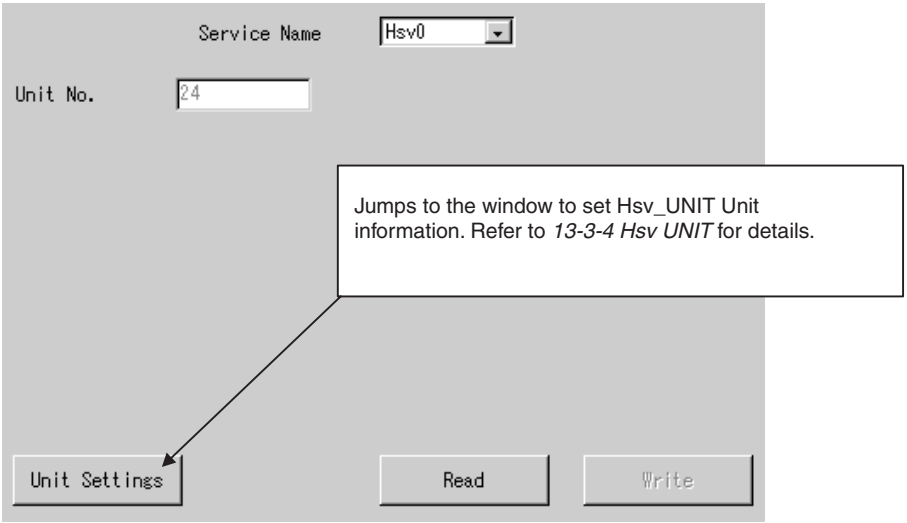

Settings

Item	Setting
Service Name	Select the name of the service to display or set: Hsv0, Hsv1, or Hsv2.
Unit No.	The default unit number for the Hsv□ is displayed. There is no reason to change the default setting.

13-3-4 Hsv UNIT

The PLC model code to be returned to the PT from the Open Network Controller must be set.

Select ***Hsv UNIT*** from the Menu Window. The following window will be displayed showing the current setting.

Settings

Item	Setting
Service Name	Select the name of the service to display or set: Hsv0, Hsv1, or Hsv2.
PLC Model	Select the PLC model code to return to the PT from the Open Network Controller.

Reference Information: PLC Model Codes

PLC	Model code
C250	0x01
C500	0x02
C120 or C50	0x03
C250F	0x09
C500F	0x0A
C120F	0x0B
C2000	0x0E
C1000H	0x10
C2000H, CQM1, or CPM1	0x11
C20H, C28H, C40H, C200H, or C200HS	0x12 (default)
C1000HF	0x13
CV500	0x20
CV1000	0x21
CV2000	0x22
CS1/CJ1	0x30
CVM1-CPU01	0x40
CVM1-CPU11	0x41
CVM1-CPU21	0x42

13-3-5 RUT

The network number and node number of the RUT_UNIT must be set. The numbers set here are the network and node numbers of the Open Network Controller as viewed from the PT.

Click ***RUT*** in the Menu Window. The following window will be displayed showing the current settings.

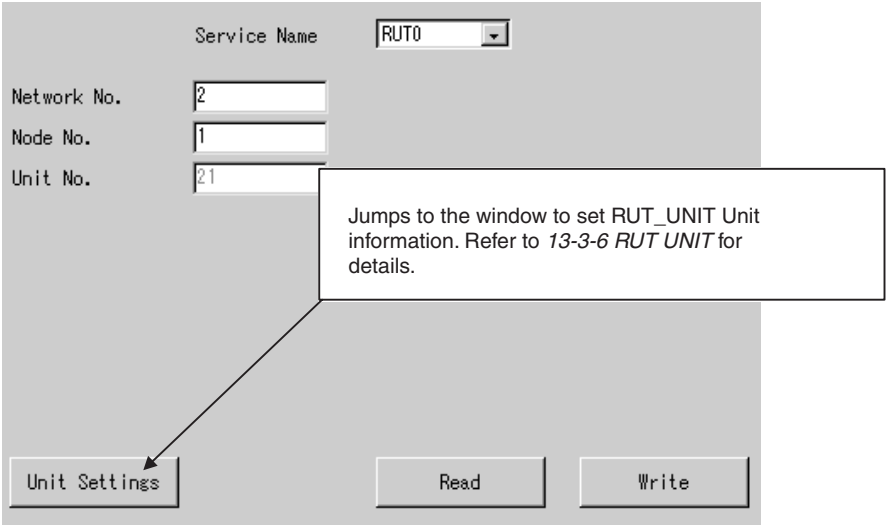

Settings

Item	Setting
Service Name	Select the name of the service to display or set: RUT0, RUT1, or RUT2.
Network No.	Set the network number of the RUT□ to between 1 and 127. This is the network number of the Open Network Controller as viewed from the PT.
Node No.	Set the node number of the RUT□ to between 1 and 253 This is the node number of the Open Network Controller as viewed from the PT.
Unit No.	The default unit number for the RUT□ is displayed. There is no reason to change the default setting.

13-3-6 RUT UNIT

The communications settings for the COM port allocated to RUT□ must be set.

Select ***RUT UNIT*** from the Menu Window. The following window will be displayed showing the current settings.

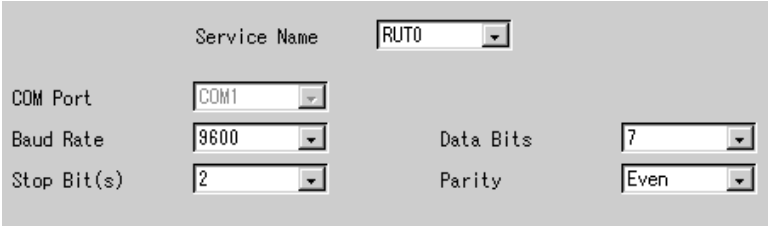

Settings

Item	Setting
Service Name	Select the name of the service to display or set: RUT0, RUT1, or RUT2.
COM Port	The number of the COM port allocated to RUT□ is displayed.
Baud Rate	Set the baud rate to 300, 600, 1200, 1800, 2400, 9600 19200, 38400, 57600, or 115200.
Data Bits	Set the data length to 5, 6, 7, or 8 bits.
Stop Bit(s)	Set the number of stop bits to 1 or 2.
Parity	Set the parity to even, odd, or none.

SECTION 14
RCOM_UNIT (RemoteCOM Connection Network Provider)

This section describes the RCOM_UNIT RemoteCOM connection network provider (NP).

14-1 Overview of RemoteCOM Functions 260
14-2 Hardware Settings for RemoteCOM 262
14-2-1 Setting the SerialGateBox. 262
14-2-2 Device Connections 263
14-3 RemoteCOM Setup 265
14-3-1 Startup Services 265
14-3-2 Setting the RemoteCOM Unit 266
14-3-3 RCOM. 266
14-3-4 RCOM UNIT 267
14-3-5 RCOM ID 268
14-3-6 RCOM TP. 269
14-3-7 RCOM NetTbl 270
14-3-8 Restarting the Open Network Controller 271
14-4 FINS Commands Addressed to RCOM_UNIT 271
14-4-1 SYSWAY Protocol 271
14-4-2 Precautions 276
14-4-3 FINS Commands Addressed to RCOM_UNIT 276

14-1 Overview of RemoteCOM Functions

The RemoteCOM Unit (RCOM_UNIT) is a software component that is used to enable the RS-232C port of the ITNC-SGB01 SerialGateBox to be used as an Open Network Controller serial port.

The RCOM_UNIT functions as a FinsGatewayQNX NP (network provider) with the Open Network Controller in the same way as the HLK_UNIT. To use RCOM_UNIT, the Open Network Controller requires application software (either the Open Network Controller's optional software or user-provided software) to enable RCOM_UNIT to be used with the Open Network Controller, in the same way as with HLK_UNIT. The differences between using serial communications with HLK_UNIT and RCOM_UNIT are shown in the following diagrams.

Serial Communications Using HLK_UNIT

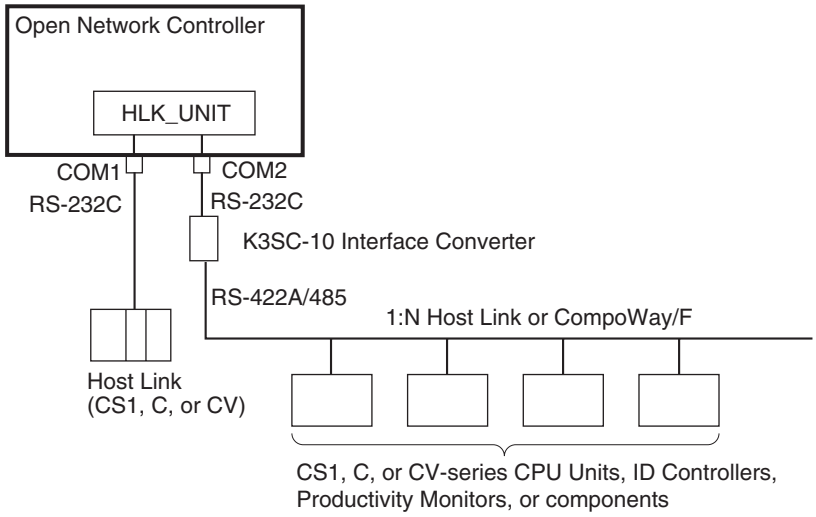

Serial Communications Using RCOM_UNIT

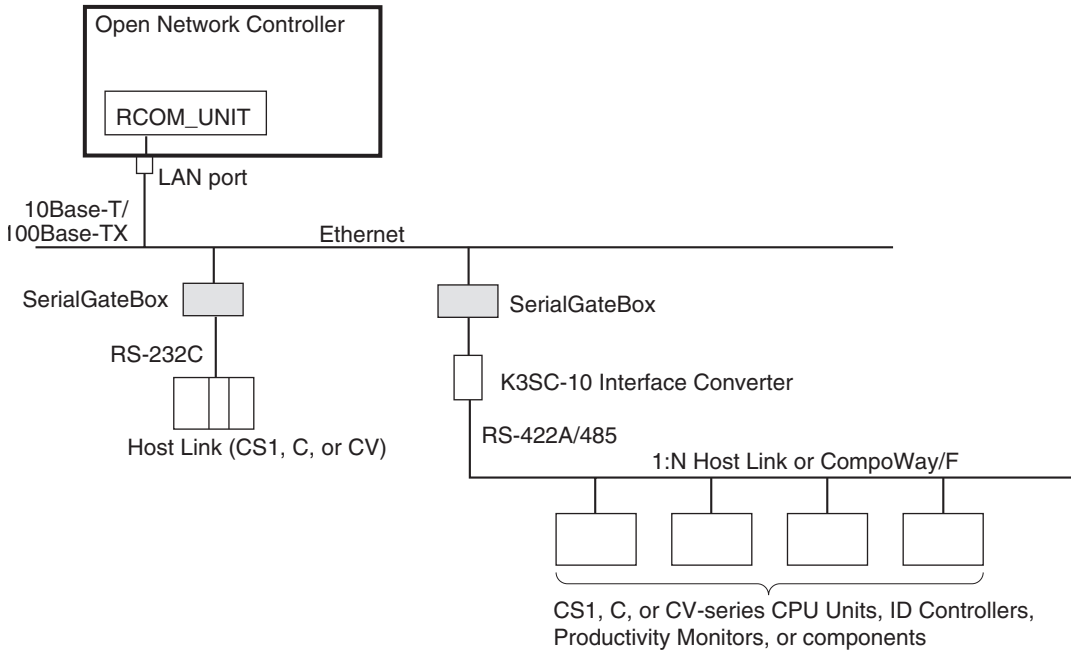

System Configuration

The Open Network Controller can send and receive FINS messages to and from PLCs and OMRON FA components that support the CompoWay/F protocol through SerialGateBoxes on an Ethernet network. When a 1:N Host Link or CompoWay/F network is connected, RS-232-to-RS-422A/485 conversion can be performed using a K3SC-10 Interface Converter.

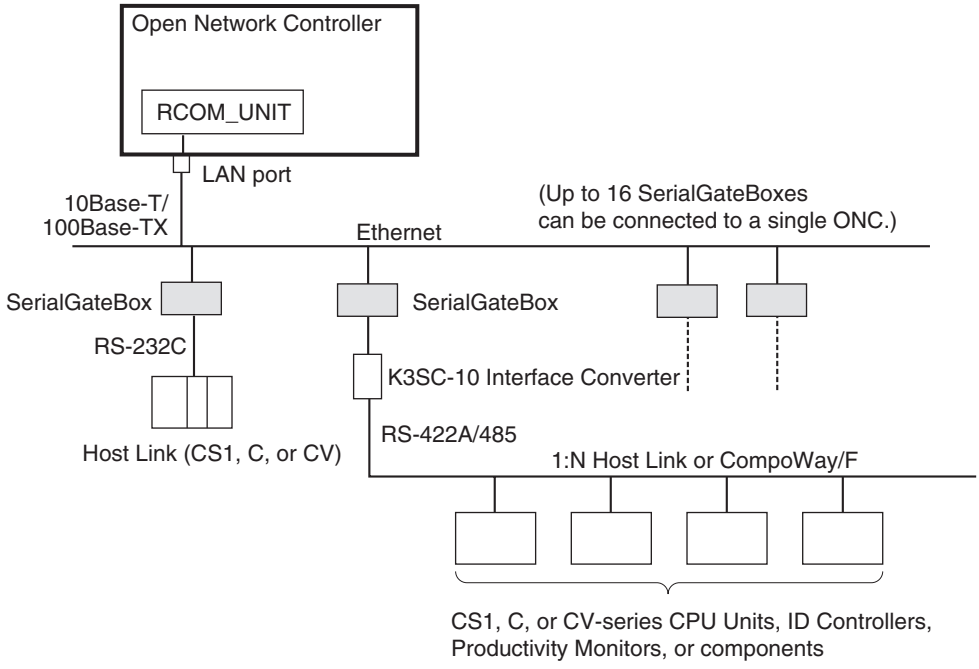

Note

1. Direct connections to RS-422 and RS-485, and to non-OMRON PLCs, are not supported.
2. This communications system can be used simultaneously with standard Ethernet communications (such as FTP).
3. Each Open Network Controller and SerialGateBox has a separate IP address. For details on setting the SerialGateBox IP addresses and port numbers, refer to the *SerialGateBox Operation Manual*. Up to 16 SerialGateBoxes can be connected to a single Open Network Controller. If this condition is satisfied, an essentially unlimited number of Open Network Controllers can be used on a single network.

Number of Connectable Units

Up to 16 SerialGateBoxes can be connected to a single Open Network Controller. The unit number of the RCOM_UNIT, however, must not be the same as the unit number of other network providers (such as the ETN_UNIT or HLK_UNIT).

If the above conditions are satisfied, an essentially unlimited number of Open Network Controllers can be used on a single network.

Note The unit numbers can be checked using the *Startup Services* setting. For details, refer to *14-3-1 Startup Services* under *14-3 RemoteCOM Setup*.

Supported Serial Communications Protocols

The following serial communications protocols are supported by RCOM_UNIT, just as they are for HLK_UNIT.

- SYSWAY
- SYSWAY CV
- CompoWay/F
- ID Controllers (V600/V620 Series)
- Productivity Monitors (TP700-B1, TP700-B2, and TP710-A)

RCOM_UNIT converts FINS commands to commands in the above protocols. This function enables FINS message communications between personal computers and other devices on the Ethernet network and the following devices, including OMRON FA components that support the CompoWay/F protocol and the following OMRON PLCs.

- PLCs that do not directly support FINS commands, e.g., the CQM1, SRM1, C1000H, C2000H, and C20P
- Temperature Controllers (e.g., the E5CN) and Intelligent Signal Processors on a CompoWay/F network, which previously could not connect to personal computers and other devices on Ethernet networks

Note MEL_UNIT cannot be used to connect non-OMRON PLCs through SerialGateBoxes.

Refer to *SECTION 12 HLK_UNIT (Serial Network Provider)* for details on FINS commands, including a list of supported FINS commands and applicable models.

14-2 Hardware Settings for RemoteCOM

14-2-1 Setting the SerialGateBox

The following settings are required for the ITNC-SGB01 SerialGateBox before connecting it to the Open Network Controller.

The IP address and port number of the SerialGateBox must be set. These settings are made using the SGB Remote Setup Utility included with the SerialGateBox. For actually setting methods, refer to *Section 3 SerialGateBox Setup* in the *SerialGateBox Operation Manual.* When using the RemoteCOM Unit to use the SerialGateBox as a COM port of the Open Network Controller, the settings described in *Section 4 Computer (Remote COM) Setup* in the *SerialGateBox Operation Manual* are not required.

Note Do not set the same IP address for the Open Network Controller and SerialGateBoxes. Each device must have a unique IP address.

14-2-2 Device Connections

This section describes the connection methods for Open Network Controllers, SerialGateBoxes, PLCs, and OMRON FA components.

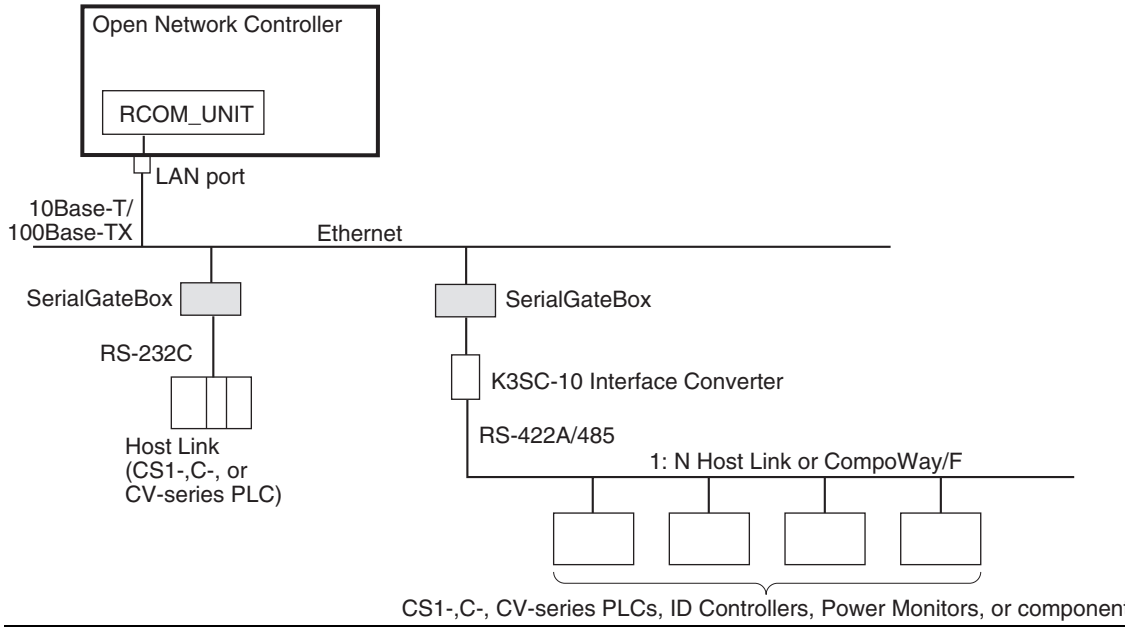

Connecting the Open Network Controller to SerialGateBoxes

The Open Network Controller is connected to SerialGateBoxes using Ethernet. Up to 16 SerialGateBoxes can be connected to one Open Network Controller. The unit number of the RCOM_UNIT cannot be set to the same value as another network provider (e.g., ENT_UNIT or HLK_UNIT). If other network providers are used, then fewer SerialGateBoxes can be connected. For example, if ENT_UNIT is used, then only 15 SerialGateBoxes can be connected.

Note Do not set the same IP address for the Open Network Controller and SerialGateBoxes. Each device must have a unique IP address.

Connecting SerialGateBoxes to FA Devices

There are basically two ways of connecting a SerialGateBox to PLCs or FA devices. (Refer to the above diagram.)

- Connection via RS-232C
- Connection by converting RS-232C to RS-422A/485 using a K3SC-10 Interface Converter

These methods are described next.

RS-232C (1:1 Host Link)

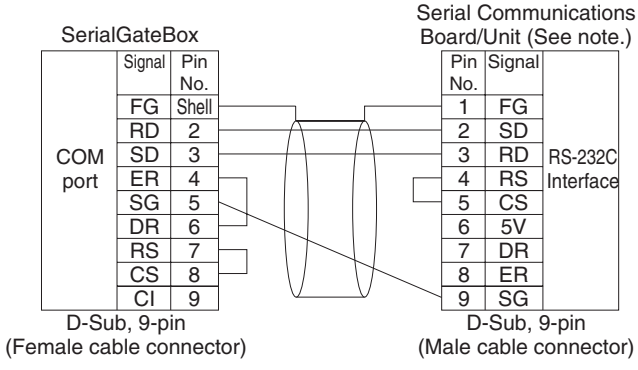

Note The connector pin arrangement of a CS1 Communications Board/Unit is shown. The pin arrangement is different for Host Link Units and Boards. Refer to the operation manual for the specific Unit/Board for details, using the signal names given above as reference.

Converting RS-232C to RS-422A/485 Using the K3SC-10 (1:N Host Link, CompoWay/F, ID Controllers, and Productivity Monitors)

Refer to the manual provided with the K3SC-10 for details on the K3SC-10.

■ **RS-485 Connections**

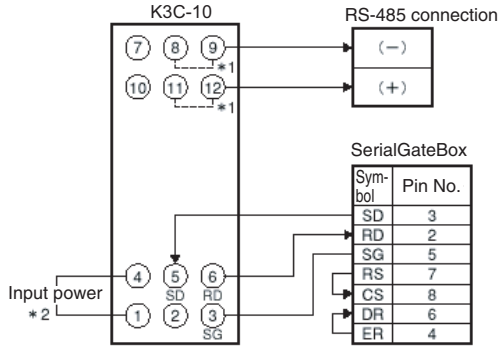

*1. Internally short 8 and 9, and 11 and 12 when RS-485 communications are selected (DIP switch pin 9 is OFF).
*2. Use an input power supply of 100 to 240 VAC or 24 VAC/VDC

■ **RS-422A Connections**

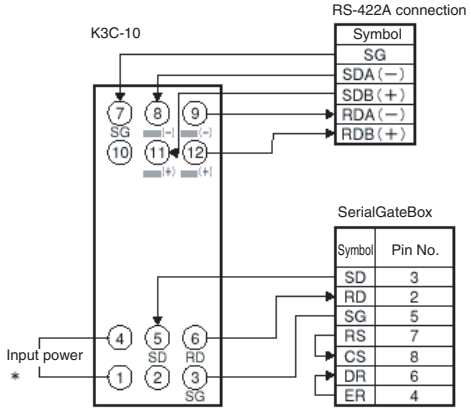

* Use an input power supply of 100 to 240 VAC or 24 VAC/VDC (no polarity).

Note Connect SG on the RS-422A side only when it is required by the remote device.

14-3 RemoteCOM Setup

The RemoteCOM Unit services must be registered.

14-3-1 Startup Services

1,2,3...

1. Select ***Startup Services*** from the Menu Window. The Startup Service Setting Window will be displayed showing the current settings.

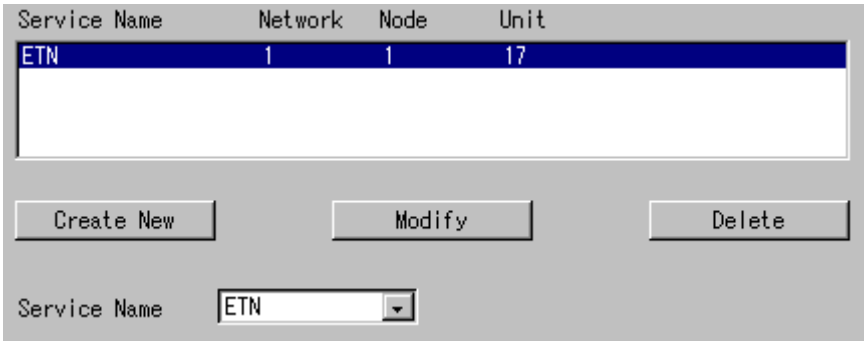

2. Register the RemoteCOM Unit services (RCOM0 to RCOM15). Up to 16 services can be registered.

   Unit numbers are from 32 to 47 and are allocated in order to RCOM0 to RCOM15 (RCOM0 = unit number 32, ..., RCOM15 = unit number 47).

   The same unit number can be used for only one Unit of any type. Be sure each unit number is used only once.

   Select a service (RCOM0 to RCOM15) in the *Service Name* Box and click the **New** Button. In this example, RCOM0 (unit number 32) is registered.

   The service will be registered as shown in the following window. In the following window example, the service HLK3 is added.

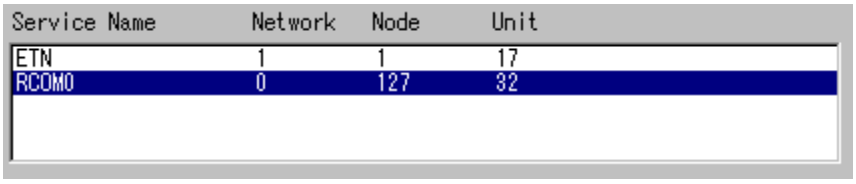

   Repeat this step until all of the required Remote COM Units have been registered.

3. Click the **Write** Button.

Note Network and node addresses are set under the RCOM menu item of the RemoteCOM Setting Tool. Refer to the next section for details.

14-3-2 Setting the RemoteCOM Unit

The network number and node number of the RemoteCOM Unit, the RemoteCOM communications settings, and the Remote COM network table must be set. The network and node numbers are set under *RCOM* for each Remote COM Unit.

If the node is a SYSWAY, SYSWAY CV or CompoWay/F node, the communications settings are made under *RCOM UNIT.* If the node is an ID Controller or Productivity Monitor, the communications settings are made under the following menus.

ID Controllers: RCOM ID
Productivity Monitors: RCOM TP

All nodes connected in the RemoteCOM network must be registered in the RemoteCOM network table (*RCOMNetTbl).* The FINS node number, unit number, protocol, and PLC model are set in the RemoteCOM network table for all SYSWAY, SYSWAY CV or CompoWay/F, ID Controller, and Productivity Monitor nodes.

14-3-3 RCOM

Use the following procedure to set the network number and node number of RemoteCOM Unit.

1,2,3... 1. Click ***RCOM*** in the Menu Window. The following window will be displayed showing the current settings.

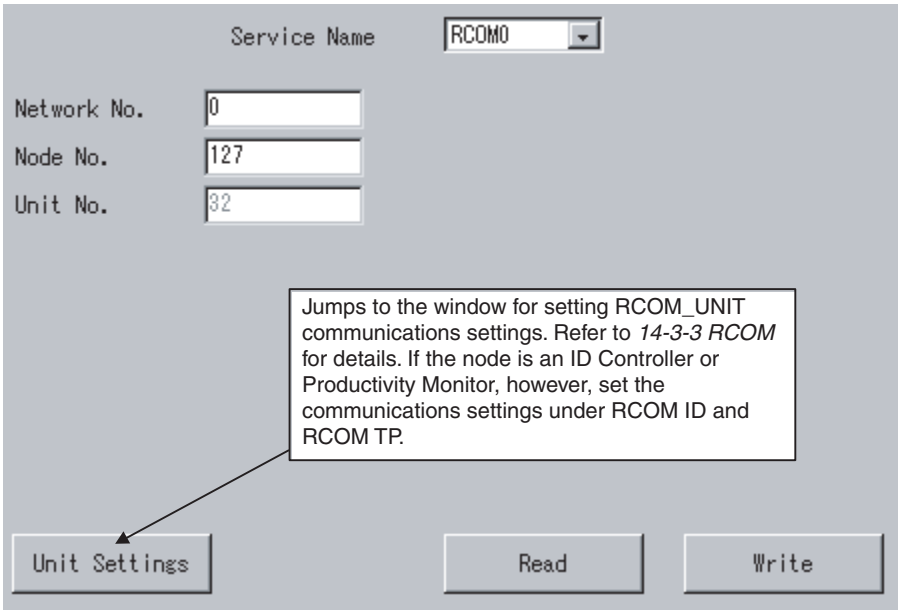

Settings

Item	Setting
Service Name	Select the name of the service to display or set: RCOM0 to RCOM15.
Network No.	Set the RCOM□ network number between 1 and 127. A different RCOM network address must be set for each SerialGateBox.
Node No.	Set the RCOM□ node number between 1 and 253.
Unit No.	The default unit number of RCOM□ is displayed. There is no reason to change the default setting. Refer to *14-3-1 Startup Services*for details on unit numbers.

14-3-4 RCOM UNIT

The RCOM□ communications settings for nodes using the SYSWAY, SYSWAY CV, or CompoWay/F protocol must be set. When the node is an ID Controller or Productivity Monitor, set the communications settings using RCOM ID or RCOM TP, respectively.

Click ***RCOM UNIT*** in the Menu Window. The following window will be displayed showing the current settings.

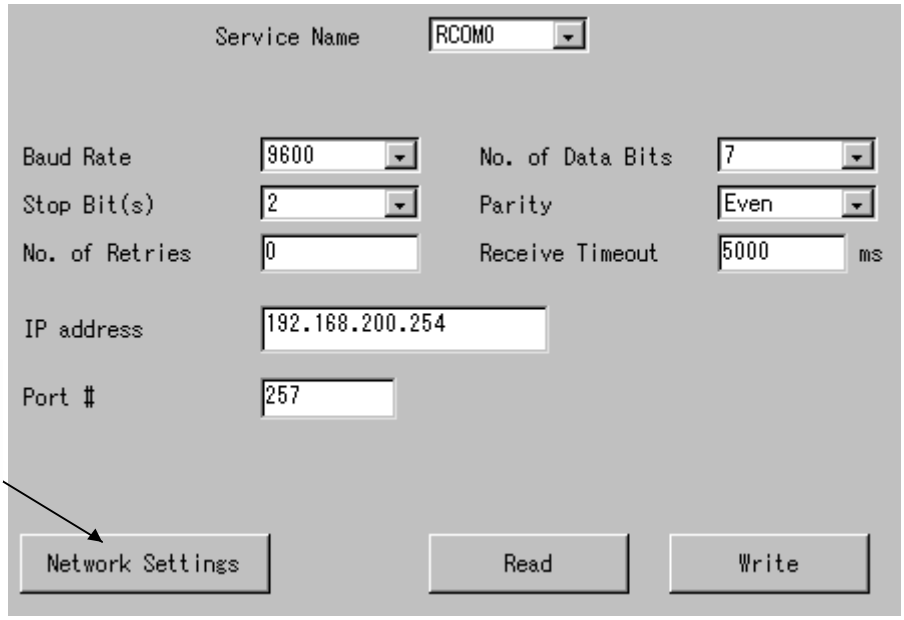

Jumps to the window for setting the RCOM address setting table for RCOM□. Refer to *14-3-7 RCOMTbl0* for details.

Settings

Item	Setting
Service Name	Select the name of the service to display or set: RCOM0 to RCOM15.
Baud Rate	Set the baud rate to 300, 600, 1200, 1800, 2400, 4800, 9600, 19200, 38400, 57600, or 115200.
No. of Data Bits	Set the data length to 5, 6, 7, or 8 bits.
Stop Bit(s)	Set the number of stop bits to 1 or 2.
Parity	Set the parity to even, odd, or none.
No. of Retries	Set the number of retries when a communications error occurs.
Receive Timeout	Set the Host Link response timeout time in ms.
IP Address	Set the IP address of the SerialGateBox to connect.
Port Number	Set the port number of the SerialGateBox to connect.

14-3-5 RCOM ID

Use the following procedure to set the communications settings for RCOM□ when the node is an ID Controller.

Select ***RCOM ID*** from the Menu Window. The following window will be displayed showing the current settings.

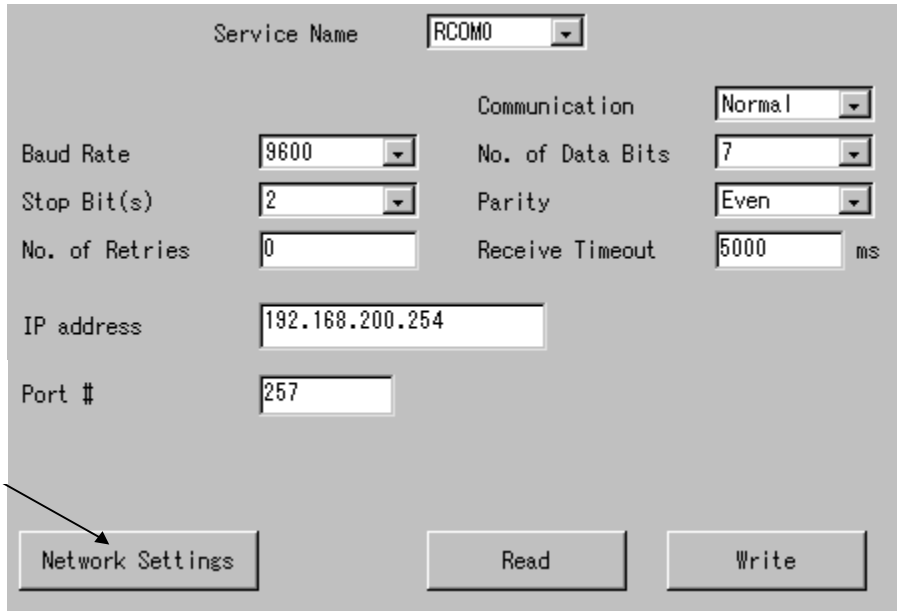

Jumps to the window for setting the RCOM address setting table for RCOM□. Refer to *14-3-7 RCOMNetTbl0* for details.

Settings

Item	Setting
Service Name	Select the name of the service to display or set: RCOM0 to RCOM15.
Communication	Set the ID command corresponding to the FINS commands 01 01 and 01 02. Normal: Read/write (RD/WT) AutoR/W: Auto read/auto write (AR/AW)
Baud Rate	Set the baud rate to 300, 600, 1200, 1800, 2400, 4800, 9600, 19200, 38400, 57600, or 115200.
No. of Data Bits	Set the data length to 5, 6, 7, or 8 bits.
Stop Bit(s)	Set the number of stop bits to 1 or 2.
Parity	Set the parity to even, odd, or none.
No. of Retries	Set the number of retries when a communications error occurs.
Receive Timeout	Set the Host Link response timeout time in ms.
IP Address	Set the IP address of the SerialGateBox to connect.
Port Number	Set the port number of the SerialGateBox to connect.

14-3-6 RCOM TP

Use the following procedure to set the communications settings for RCOM□ when the node is a Productivity Monitor.

Select ***RCOM TP*** from the Menu Window. The following window will be displayed showing the current settings.

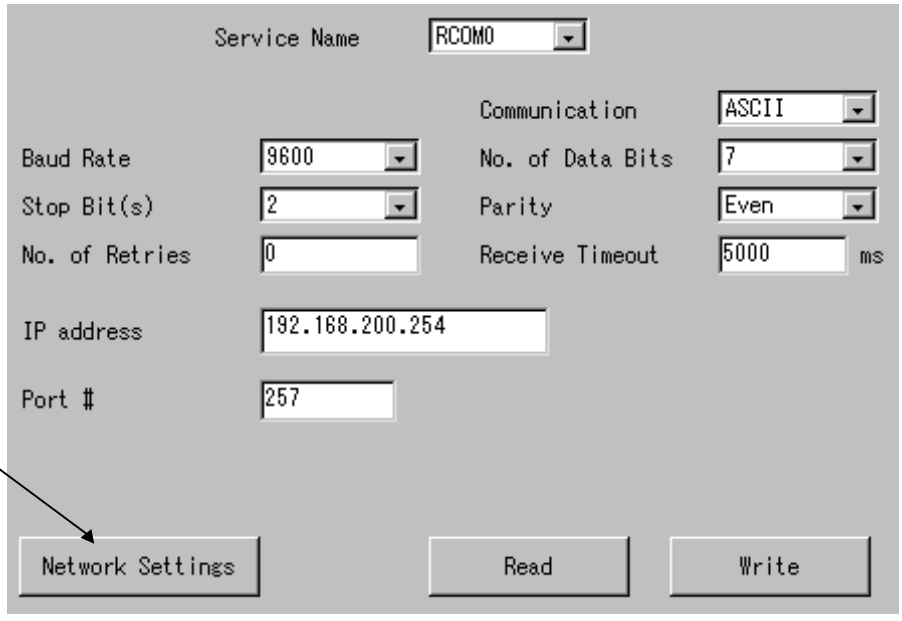

Jumps to the window for setting the RCOM address setting table for RCOMK□. Refer to *14-3-7 HlkNetTbl0 for details.*

Click the Network Settings Button to jump to the window for setting the RCOM address setting table for RCOMK□. Refer to 14-3-7 *HlkNetTbl0* for details.

Settings

Item	Setting
Service Name	Select the name of the service to display or set: RCOM0 to RCOM15.
Communication	Set the send mode of the Productivity Monitor TP to ASCII or binary.
Baud Rate	Set the baud rate to 300, 600, 1200, 1800, 2400, 4800, 9600, 19200, 38400, 57600, or 115200.
No. of Data Bits	Set the data length to 5, 6, 7, or 8 bits.
Stop Bit(s)	Set the number of stop bits to 1 or 2.
Parity	Set the parity to even, odd, or none.
No. of Retries	Set the number of retries when a communications error occurs.
Receive Timeout	Set the Host Link response timeout time in ms.
IP Address	Set the IP address of the SerialGateBox to connect.
Port Number	Set the port number of the SerialGateBox to connect.

14-3-7 RCOM NetTbl

All nodes connected to the RCOM□ network must be registered in the RCOM address setting table.

Set the FINS node number, unit number, protocol, and model for each node: SYSWAY, SYSWAY CV, CompoWay/F, ID Controller, or Productivity Monitor.

- SYSWAY or SYSWAY CV nodes cannot be used together with CompoWay/F nodes. SYSWAY and SYSWAY CV nodes can be used together.
- ID Controllers and TP Productivity Monitors cannot be used together with other protocols.

Select ***RCOMNetTbl*** from the Menu Window. The following window will be displayed showing the current settings.

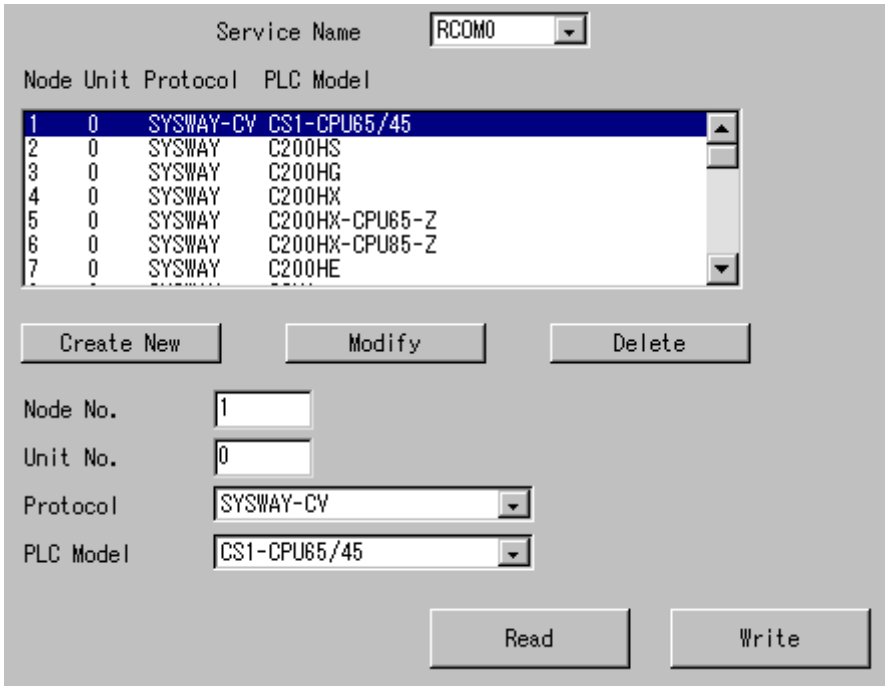

Settings

Item	Setting
Service Name	Select the name of the service to display or set: RCOM0 to RCOM15.
Node	Set the FINS node number between 1 and 253.
Unit	Set the unit number between 0 and 255.
Protocol	Set the protocol to SYSWAY, SYSWAY CV, CompoWay/F, ID, TP700, or TP710.
PLC Model	Set the PLC model.

14-3-8 Restarting the Open Network Controller

Use the following procedure to restart the Open Network Controller after connecting one or more SerialGateBoxes.

1,2,3...

1. Turn ON the power supply to all of the SerialGateBoxes connected to the Open Network Controller using Ethernet.
2. Confirm that all settings on the Open Network Controller have been completed and when turn the power supply OFF and back ON.

The RUN indicator will light green if all settings have been made correctly and all network providers start properly.

Normal Connection between RCOM_UNIT and SerialGateBox

The STATUS2 indicator on the SerialGateBox will light green. Refer to the operation manual provided with the SerialGateBox for details on SerialGateBox status.

Connection Not Possible between RCOM_UNIT and SerialGateBox

If connection is not possible, the ERR indicator will light red and the type of error will be displayed on the 7-segment display. Refer to *SECTION 19 Troubleshooting*.

Turning ON SerialGateBox Power or Connecting the Ethernet Cable Too Late

The RCOM_UNIT will retry connecting to the SerialGateBox. Error 0505 will be displayed on the 7-segment display and output to the syslog. Refer to *19-2 Error Messages*.

The ERR indicator will go out when all RCOM_UNITs have connected to the SerialGateBoxes.

14-4 FINS Commands Addressed to RCOM_UNIT

Overview of FINS Commands

The FINS commands used for RCOM_UNIT are basically the same as those used for HLK_UNIT. This section describes the FINS commands that are unique to the RCOM_UNIT. Only the following table are precautions are provided for FINS commands that are the same as HLK_UNIT FINS commands.

14-4-1 SYSWAY Protocol

Refer to *12-4 FINS Commands Addressed to Devices via HLK_UNIT* on using the following FINS commands.

FINS Commands

Command code	Name
01 01	READ MEMORY AREA
01 02	WRITE MEMORY AREA
04 01	RUN
04 02	STOP
05 01	CONTROLLER DATA READ
06 01	CONTROLLER STATUS READ
08 01	LOOPBACK TEST
22 0F	FILE MEMORY INDEX READ
22 10	FILE MEMORY READ
22 11	FILE MEMORY WRITE
23 01	FORCED SET/RESET
23 02	FORCED SET/RESET CANCEL

Applicable PLCs

The following PLCs support the SYSWAY protocol. Some PLCs do not support all of the above commands.

C20, C50, C120, C120F, C20H/C28H/C40H/C60H, C20P/C28P/C40P/C60P, C20PF/C28PF/C40PF/C60PF, C500, C500F, C1000H, C1000HF, C2000H, C200H, C200HS, C200HX/HG/HE, CQM1, CQM1H, CPM1, CPM1A, CPM2A, CPM2C, SRM1, CV500, CVM1, CV1000, CV2000, and CS1, and CJ1.

Precautions

- The maximum read size for command 01 01 (READ MEMORY AREA) is 1,022 words instead of 497 words.
- The maximum write size for command 01 02 (WRITE MEMORY AREA) is 1,022 words instead of 497 words.

SYSWAY CV Host Link Protocol

Refer to the *FINS Command Reference Manual* (Cat. No. W227) on using the following FINS commands.

FINS Commands

Command code		Name
01	01	MEMORY AREA READ
	02	MEMORY AREA WRITE
	03	MEMORY AREA FILL
	04	MULTIPLE MEMORY AREA READ
	05	MEMORY AREA TRANSFER
02	01	PARAMETER AREA READ
	02	PARAMETER AREA WRITE
	03	PARAMETER AREA CLEAR
03	04	PROGRAM AREA PROTECT
	05	PROGRAM AREA PROTECT CLEAR
	06	PROGRAM AREA READ
	07	PROGRAM AREA WRITE
	08	PROGRAM AREA CLEAR
04	01	RUN
	02	STOP
05	01	CONTROLLER DATA READ
	02	CONNECTION DATA READ
06	01	CONTROLLER STATUS READ
	20	CYCLE TIME READ
07	01	CLOCK READ
	02	CLOCK WRITE
09	20	MESSAGE READ (MESSAGE CLEAR, FAL/FALS READ)
0C	01	ACCESS RIGHT ACQUIRE
	02	ACCESS RIGHT FORCED ACQUIRE
	03	ACCESS RIGHT RELEASE
21	01	ERROR CLEAR
	02	ERROR LOG READ
	03	ERROR LOG CLEAR
22	01	FILE NAME READ
	02	SINGLE FILE READ
	03	SINGLE FILE WRITE
	04	MEMORY CARD FORMAT
	05	FILE DELETE
	06	VOLUME LABEL CREATE/DELETE
	07	FILE COPY
	08	FILE NAME CHANGE
	09	FILE DATA CHECK
	0A	MEMORY AREA FILE TRANSFER
	0B	PARAMETER AREA FILE TRANSFER
	0C	PROGRAM AREA FILE TRANSFER
23	01	FORCED SET/RESET
	02	FORCED SET/RESET CANCEL

Applicable PLCs

The following PLCs support the SYSWAY CV protocol. (Not all of the above FINS commands are supported by each of the PLCs.)

CVM1, CV-series, CS1, and CJ1 PLCs

CompoWay/F Protocol

Applicable Commands

The commands that can be used depend on the CompoWay/F component. Refer to the operation manuals for the components.

Refer to *12-4-16 FINS Commands for the CompoWay/F Protocol* in *12-4 FINS Commands Addressed to Devices via HLK_UNIT* for information on sending FINS commands from the Open Network Controller to CompoWay/F components.

Applicable Models

Commands can be sent to any component that supports the CompoWay/F protocol.

ID Controllers (V600/V620 Series)

Refer to *12-5 FINS Commands Addressed to the ID Controller* on using the following FINS commands.

FINS Commands Addressed to ID Controllers

The following FINS commands addressed to ID Controllers are supported by this Unit.

Command code	Name
01 01	MEMORY AREA READ
01 02	MEMORY AREA WRITE
02 02	DATA MANAGEMENT COMMAND EXECUTE Checks Data Carrier memory or manages the number of times memory (EEPROM) has been rewritten.
04 02	AUTOCOMMAND PROCESSING CANCEL
08 01	LOOPBACK TEST
0B 01	ABORT
32 25	ID CONTROLLER COMMUNICATIONS COMMAND EXECUTE

FINS Commands Addressed to TP700 Productivity Monitors

The following ID Controller communications commands are supported by this Unit.

ID command	Process	FINS command	Addressable range
DR	READ	0x0101, 0x3225	0000 to 1FFF
WT	WRITE	0x0102, 0x3225	0002 to 1FFF
AR	AUTO-READ	0x3225, 0x0101	0000 to 1FFF
AW	AUTO-WRITE	0x3225, 0x0102	0002 to 1FFF
PR	POLLING AUTO READ	0x3225	0000 to 1FFF
PW	POLLING AUTO WRITE	0x3225	0002 to 1FFF
AA	AUTO COMMAND PROCESSING CANCEL	0x0402, 0x3225	---
MD	DATA MANAGEMENT COMMAND	0x0202, 0x3225	---
TS	TEST	0x0801, 0x3225	---

ID command	Process	FINS command	Addressable range
XZ	Abort	0x0B01	---
IS	Response to undefined command	Response: 0401	---

TP700-B1 and TP700-B2 Productivity Monitors

Refer to *12-5 FINS Commands Addressed to the ID Controller* on using the following FINS commands.

FINS Commands

The following FINS commands addressed to Productivity Monitors are supported by this Unit.

Command code	Name
01 01	MEMORY AREA READ

TP700 Communications Commands

FINS command	Variable	Function/measurment	Requested data type
01 01	40	All measured values	0
	41	Non-programmable total power	1
	42	Programmable total power	2
	43	Instantaneous power	3
	44	Instantaneous voltage	4
	45	Instantaneous current	5
	46	Power factor and instantaneous current	6

Note Refer to the *TP700 Productivity Monitor Operation Manual* for details on the functions/measured values, and required data types.

TP710-A Productivity Monitors

Refer to *12-7 FINS Commands Addressed to TP710 Productivity Monitor* on using the following FINS commands.

FINS Commands

The following FINS commands addressed to Productivity Monitors are supported by this Unit.

Command code	Name
01 01	MEMORY AREA READ
01 02	MEMORY AREA WRITE

TP710 Communications Commands

FINS command	Function	Function/measurment
01 01	A	Measured items (category A)
01 01	B	Statistical items (category B)
0101, 0102	C	Setting items (category C)
0101, 0102	D	User information (category D)
0101, 0102	E	User control information (category E)

Note Refer to the *TP710 Productivity Monitor Operation Manual* for details on the functions and processing details.

14-4-2 Precautions

HLK does not support slave-initiated (i.e., receiving FINS commands from the PLC) communications using FINS commands.

14-4-3 FINS Commands Addressed to RCOM_UNIT

The FINS commands that can be addressed to the RCOM_UNIT are described in this section.

CONTROLLER DATA READ: 05 01

Reads the following data from the RCOM_UNIT running on the Open Network Controller.

- Model
- Version

A connection test will be performed when this command is executed. If the test is completed normally, SerialGateBox connections were established normally when the network providers started on the Open Network Controller. If an error occurs (such as in the FINS command/response operation), this command can be executed to check if connection is possible. If connection is not possible, the cables made not be connected properly, the destination SerialGateBox may be missing, or other problems may exist.

Command Format

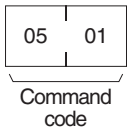

Response Format

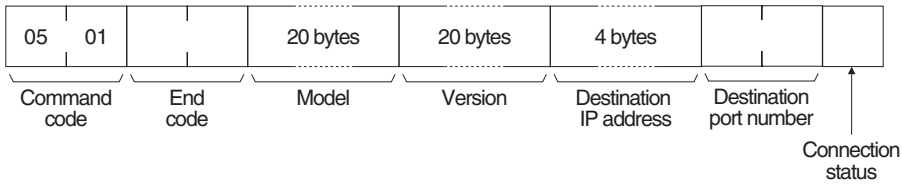

Parameters

Model and Version (response)

The model for this system is as follows: RCOM_UNIT/QNX□□□□□□□
The version is always as follows: V1.00□□□□□□□□□□□□□□□□

(□ indicates a space.)

Destination IP address (response)

The IP address of the destination (i.e., the SerialGateBox) is returned in hexadecimal. For example, if the IP address is 192.168.0.1, C0 A8 00 01 will be returned.

Destination port number (response)

The port number of the destination (i.e., the SerialGateBox) is returned in hexadecimal. For example, if the port number is 9600, 25 80 will be returned.

Connection status (response)

0xFF: Cannot connect to destination (i.e., the SerialGateBox)
0x1: Already connected to destination (i.e., the SerialGateBox)

End code (response)

Refer to *19-1 Troubleshooting with FINS End Codes* for information on end codes.

SECTION 15
Setup Examples

This section shows the settings for an example system configuration.

15-1 Example Configuration 278
15-2 Ethernet Settings 279
15-3 COM Port Settings 279
15-4 FINS Startup Services 280
15-5 Ethernet Network Provider Settings 280
15-5-1 ETN_UNIT Settings 280
15-5-2 IP Network Table Settings 280
15-6 DeviceNet Network Provider Settings 281
15-6-1 DRM_UNIT Network Number and Node Number Settings 281
15-6-2 Communications, DeviceNet Start Scan Mode, and Other Settings. 281
15-6-3 Event Memory Allocations 282
15-6-4 Scan List File Settings 283
15-7 Controller Link Network Provider Settings 283
15-7-1 CLK_UNIT Network Number and Node Number Settings 283
15-7-2 Communications and Other Settings 283
15-8 HLK (Host Link) Network Provider Settings 284
15-8-1 HLK_UNIT Network Number and Node Number Settings 284
15-8-2 HLK_Unit Communications Settings 284
15-8-3 HLK Network Table Settings 284

15-1 Example Configuration

The following network configuration is used as an example to describe the environment settings for the Open Network Controller.

Network Configuration

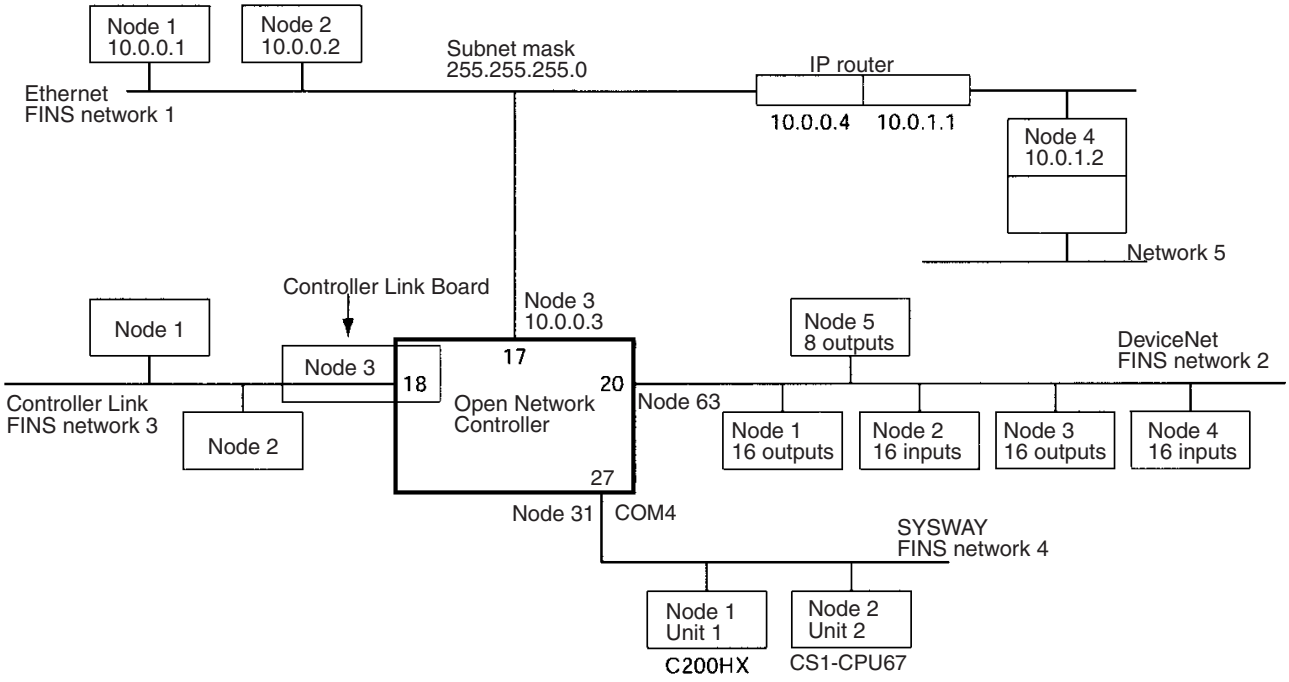

Event Memory Configuration

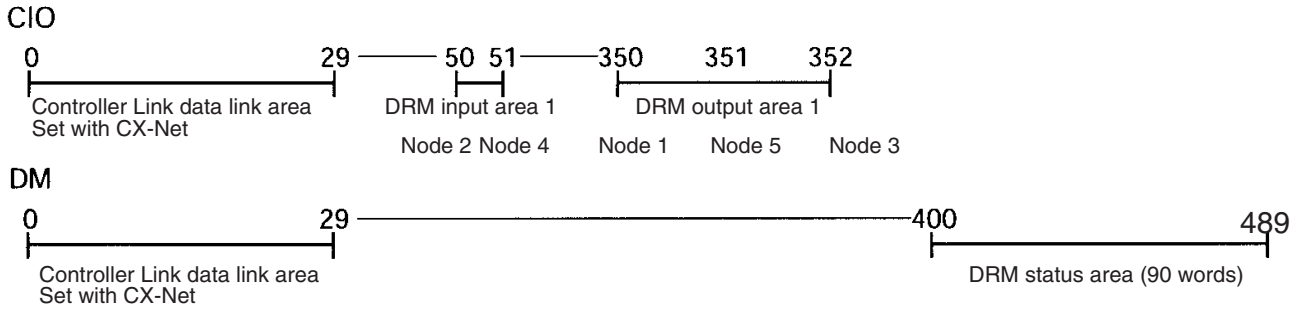

Setting Items

Settings are required for the following items to build the event memory for the above configuration.

Settings	Files
Ethernet	ONC Host IP, Other Host IP, IP Route
COM port settings	Serial Ports
Starting FINS services	Startup Services
Ethernet network provider	ETN (Ethernet), IpTable
DeviceNet network provider	DRM (DeviceNet), DRM UNIT, DRM Mapping (Master), ScanList File
Controller Link network provider	CLK (Controller Link), CLK UNIT
Host Link network provider	HLK (Host Link), HLK UNIT, NlkNetTbl

Setting methods are described in the following sections.

15-2 Ethernet Settings

The IP addresses, host names, subnet mask, and IP router must be set. Refer to *4-6 Setting IP Addresses*.

Open Network Controller's IP Address, Host Name, and Subnet Mask Settings

The ***ONC IP Address*** menu item is used to set the IP address, host name, and subnet mask of the Open Network Controller, as shown below.

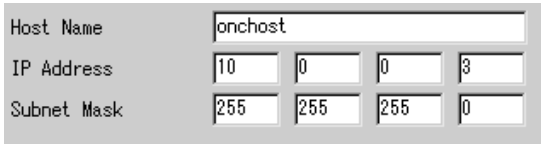

Note DNS is not used for the Open Network Controller.

IP Addresses and Host Names for Other Nodes

The ***Other Host IP*** menu item is used to set the IP addresses and host names of other nodes. These settings may be omitted.

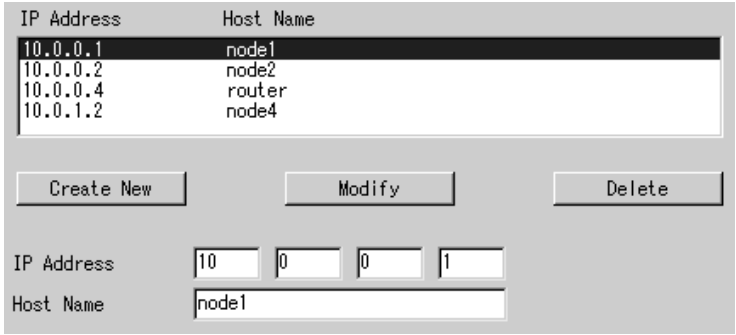

IP Route

The ***IP Route*** menu item is used to set the IP router. In this example, a setting is required to communicate with node 4 (10.0.1.2) on Ethernet.

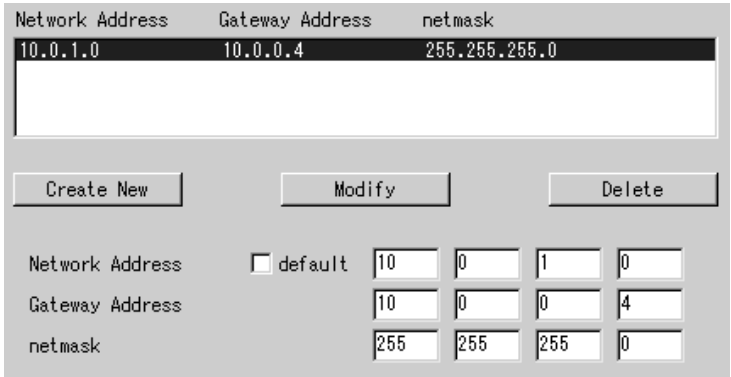

Note

1. The above setting indicates that the IP route to network address 10.0.1 is though 10.0.0.4.
2. The IP router does not need to be set if routing is not required.
3. ***Default*** can also be selected for the network address. Refer to *4-6 Setting IP Addresses*.

15-3 COM Port Settings

Serial Ports

The ***Serial Port*** setting item is used to allocate the COM ports to services. Refer to *4-6 Setting IP Addresses*.

In this example, COM4 is allocated to HLK3, as shown below. (This is the default setting.)

15-4 FINS Startup Services

Startup Services

The ***Startup Services*** menu item is used to set startup services (network providers), unit IDs, and networks. Refer to *4-7 Setting Startup Services*. Startup services must be set for the following.

- ETN must be set to use FINS communications for devices on Ethernet.
- HLK3 must be set to communicate with devices via the COM4 port.
- DRM0 must be set to read DeviceNet slave information.
- Clk0 must be set to communicate with Controller Link devices.

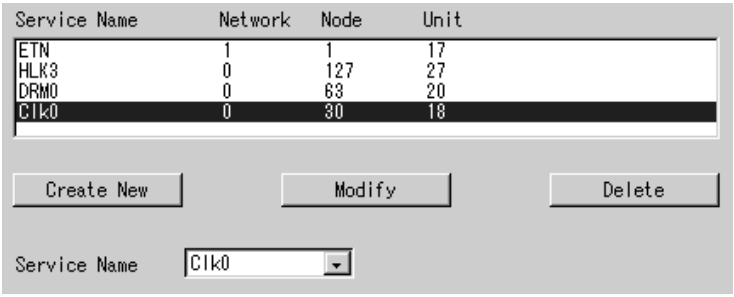

By default, COM4 is allocated to HLK3 (1:N RS-422A), so HLK3 is registered here. COM allocations can also be changed using the ***Serial Ports*** menu item. (Refer to *4-8 Serial Port Settings*.)

15-5 Ethernet Network Provider Settings

This section describes settings required for the Ethernet network provider. Refer to *SECTION 7 ETN_UNIT (Ethernet Network Provider)*.

15-5-1 ETN_UNIT Settings

The ***ETN (Ethernet)*** menu item is used to set the network number and node number of ETN_UNIT as shown below.

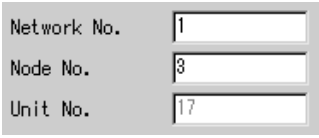

Note The ETN_UNIT unit number is set to 17 by default.

15-5-2 IP Network Table Settings

The ***IPTable*** menu item is used to set the FINS node addresses and IP address of the other nodes on Ethernet. If the IP Network Table is used, FINS

commands can be sent to specified nodes, and the table will be used to convert to IP addresses. Set the FINS node address and IP address as a set, one set for each FINS node.

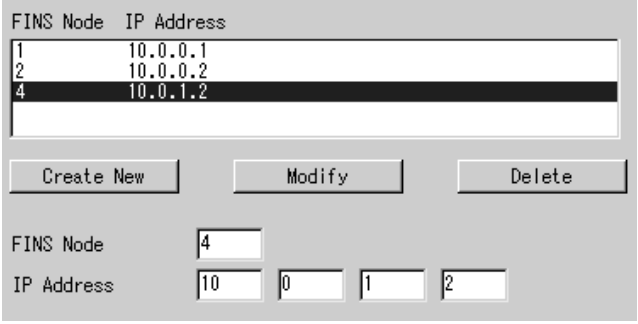

15-6 DeviceNet Network Provider Settings

This section describes settings required for the DeviceNet network provider. Refer to *SECTION 11 DRM_UNIT (DeviceNet Network Provider)*.

15-6-1 DRM_UNIT Network Number and Node Number Settings

The ***DRM (DeviceNet)*** menu item is used to set the network number and node number of DRM_UNIT, as shown below.

Note The DRM_UNIT unit number is set to 20 by default.

15-6-2 Communications, DeviceNet Start Scan Mode, and Other Settings

The ***DRM UNIT*** menu item is used to make the following settings.

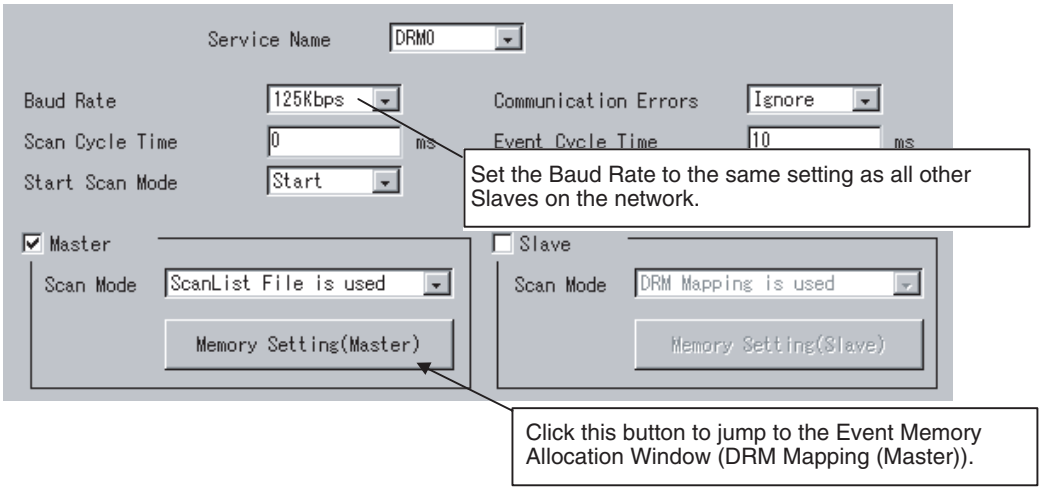

Item	Setting
Service Name	Select the service name to be displayed or set (DRM0 or DRM1).
Baud Rate	Set the DeviceNet baud rate to 125, 250, or 500 kbps.
Scan Cycle Time	Set the cycle time to scan all nodes on the DeviceNet network. If 0 is set, the DeviceNet scan cycle time will be set to the fastest time possible. Set a value between 1 and 500 ms to specify a specific time. The execution times will be stored in word 5 (current time), word 6 (maximum time), and word 7 (minimum time) in the status area.
Start Scan Mode	Set the DeviceNet scan mode to use at startup. Start: Scan. Stop: Do not scan.
Communications Errors	Set the response to DeviceNet communications errors. Ignore: Communications will continue on all nodes except the node where the error occurred. Stop: Scanning will be stopped.
Event Scan Time	Set the time interval for refreshing event memory to between 1 and 10,000 ms. Set a value that is larger than the current scan cycle time.
Master	Select *Master* to use the master function of DRM_UNIT, and then select the scan mode. ScanList File is used: The scan list set with the Setup Tool will be used for operation. Configuration Mode: The settings made with the Configurator will be used for operation. ScanList is not used: Automatic allocations will be used for operation.

Note The Slave function is not used in this setting example.

15-6-3 Event Memory Allocations

The ***DRM Mapping (Master)*** menu item is used to allocate event memory to DeviceNet Master inputs, outputs, and status.

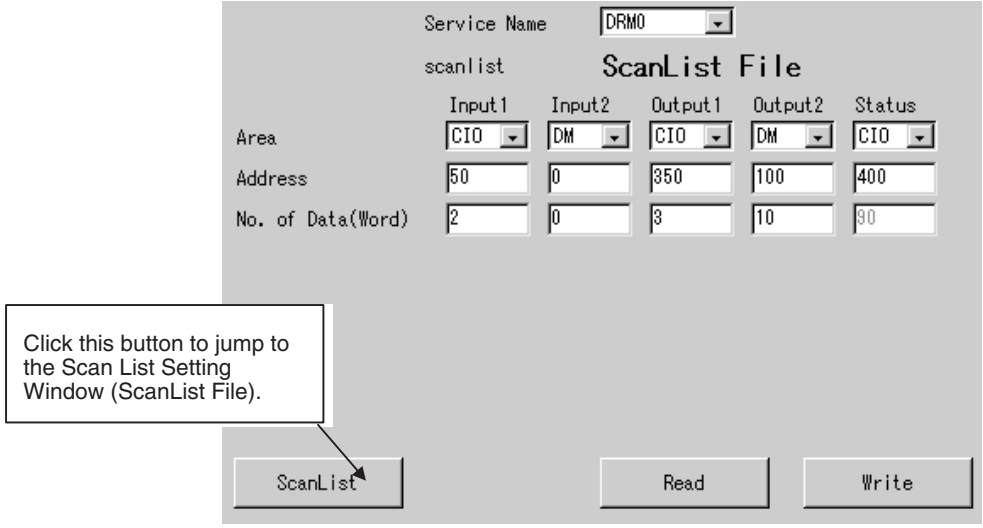

15-6-4 Scan List File Settings

The ***ScanList File*** menu item is used to set the scan list that allocates memory to DeviceNet slaves.

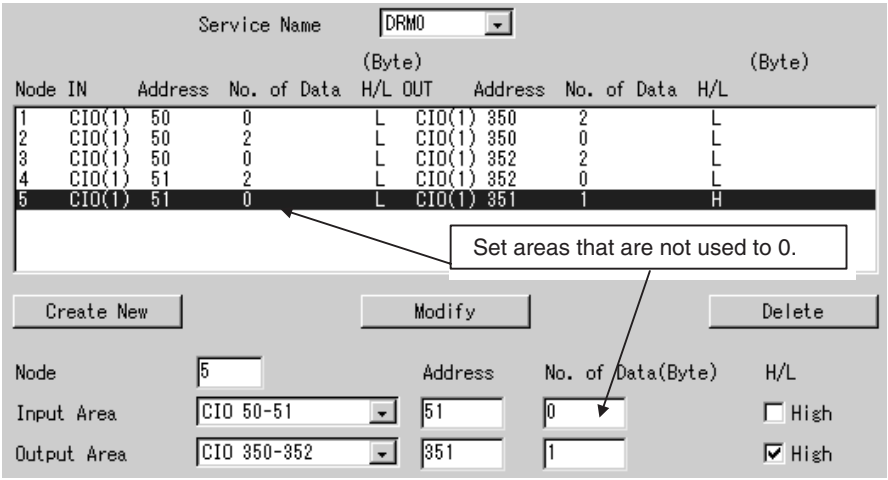

- Node 1 uses 2 bytes (1 word) beginning from CIO 350 in output area 1.
- Node 2 uses 2 bytes beginning from CIO 50 in input area 1.
- Node 3 uses 2 bytes beginning from CIO 352 in output area 1.
- Node 4 uses 2 bytes beginning from CIO 51 in input area 1.
- Node 5 uses only the high byte (bits 08 to 15) of CIO 351 in output area 1.

15-7 Controller Link Network Provider Settings

This section describes settings required for the Controller Link network provider. Refer to *SECTION 8 CLK_UNIT (Controller Link Network Provider)*.

15-7-1 CLK_UNIT Network Number and Node Number Settings

The ***CLK (Controller Link)*** menu item is used to set the network number and node number of the CLK_UNIT, as shown below.

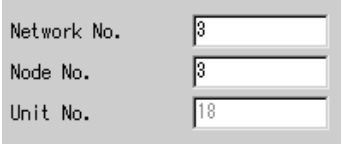

Note The CLK_UNIT unit number is set to 18 by default.

15-7-2 Communications and Other Settings

The ***CLK UNIT*** menu item is used to set the baud rate, board name, and refresh timer for the CLK_UNIT.

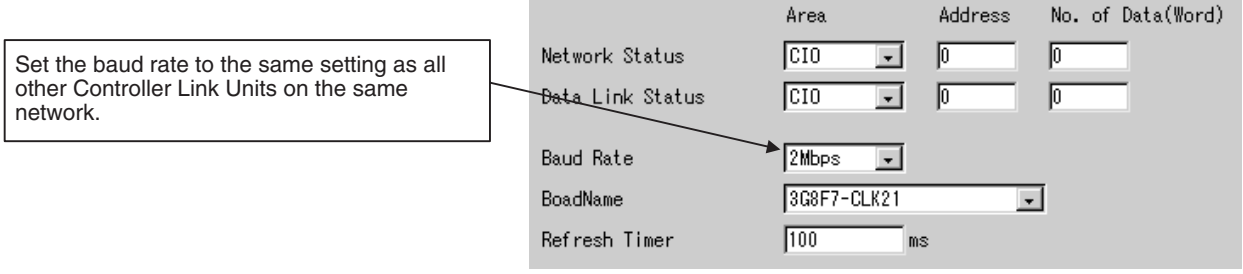

- Set the refresh timer to between 1 and 9,999 ms.

Note Refer to *8-3 CLK_UNIT Settings* for the network status area and data link status area.

15-8 HLK (Host Link) Network Provider Settings

This section describes settings required for the HLK (host link) network provider. Refer to *SECTION 12 HLK_UNIT (Serial Network Provider)*.

15-8-1 HLK_UNIT Network Number and Node Number Settings

The ***HLK (Host Link)*** menu item is used to set the service name, network number and node number of the HLK_UNIT, as shown below.

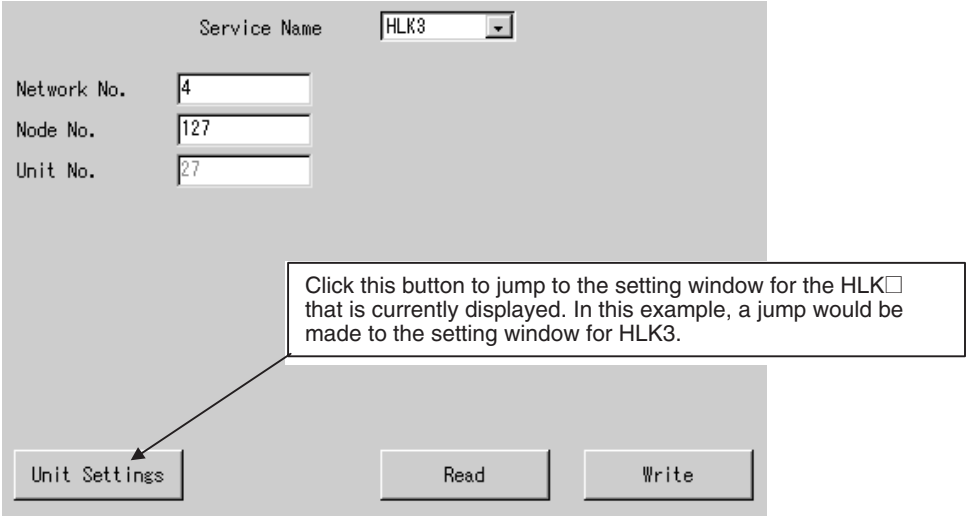

Note The HLK3 unit number is set to 27 by default.

15-8-2 HLK_Unit Communications Settings

The ***HLK Unit*** menu item is used to set the communications settings shown below.

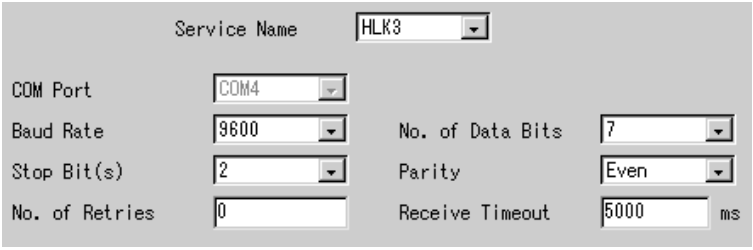

Note COM4 is the default communications port for HLK3.

15-8-3 HLK Network Table Settings

The ***HlkNetTbl*** menu item is used to set then unit number, protocol, and PLC model for each node on the SYSWAY network. The following settings are required in this example.

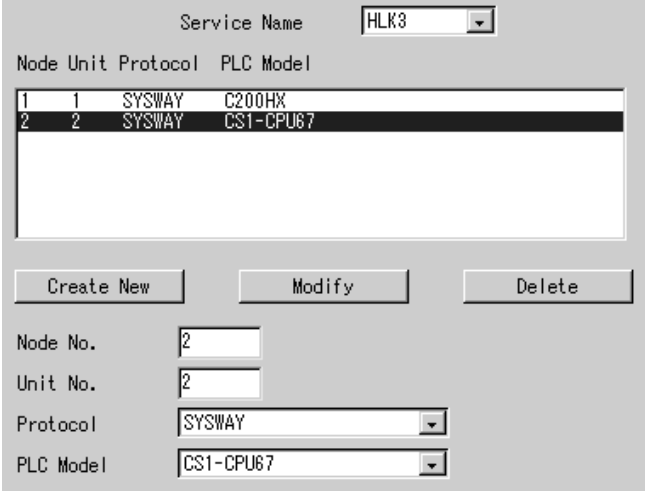
Service Name
HLK3
Node Unit Protocol PLC Model
1 1 SYSWAY C200HX
2 2 SYSWAY CS1-CPU67
Create New
Modify
Delete
Node No.
2
Unit No.
2
Protocol
SYSWAY
PLC Model
CS1-CPU67

SECTION 16
Utilities

This section describes the FLK_UNIT (FinsLink) FLK network provider (NP) and diskspace utility.

16-1 FinsLink 288
16-1-1 The FinsLink Utility 288
16-1-2 Data Link Area Allocations 288
16-2 FinsLink Hardware Settings 289
16-3 FinsLink Settings 289
16-3-1 Startup Services 289
16-3-2 Starting the Setup Utility 289
16-3-3 FinsLink Parameters 291
16-4 Diskspace Utility (Unit Ver. 1.1 or Later) 293
16-4-1 Diskspace Utility 293
16-5 Diskspace Settings (Unit Ver. 1.1 or Later) 294
16-5-1 Starting the Setup Utility 294
16-5-2 Diskspace Parameters 295

16-1 FinsLink

16-1-1 The FinsLink Utility

FinsLink is a data link utility that uses FINS commands to read and write data (memory areas DM and CIO) in a PLC connected to the Open Network Controller to create data links with the event memory in the Open Network Controller.

When FinsLink is used, data links are created between the Open Network Controller and the PLCs on all networks supported by the Open Network Controller, as follows:

- Ethernet
- Serial (only SYSMAC and SYSMAC CV communications)
- DeviceNet
- Controller Link
- SYSMAC LINK

Note The Controller Link and SYSMAC LINK both support data links. These should normally be used when data links are required. When data links are not being used, virtual data links can be created with FinsLink.

16-1-2 Data Link Area Allocations

The PLC memory areas (DM and CIO) are allocated in the Open Network Controller's event memory (DM and CIO) and participates in the data link. The PLC memory areas (DM and CIO) can then be read/written from/to the Open Network Controller from a personal computer connected to the network.

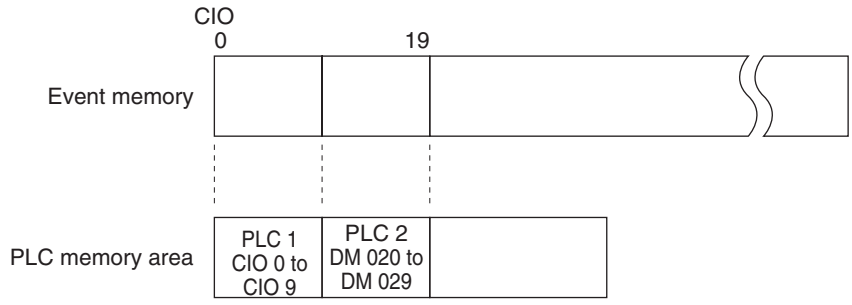

Note Specified by PLC (network address, node address, unit address).
Example: PLC 1 = (1.2.0), PLC 2= (1.3.0)

Precautions

- If FinsLink is used with more than one serially connected PLC and one of the PLCs stops, a timeout will occur each cycle when an attempt is made to access the stopped PLC. The cycle time will thus be increased by the timeout.
- For FinsLink Ver. 1.30 and higher, a new function stops transmission of FINS commands to PLCs that have been detected as being stopped (FINS command response timeout) until the specified time has lapsed. New functionality includes a function that does not detect any errors that occur while using FinsLink, a setting to switch the error level between ERROR and WARNING, and a setting that intentionally delays the start of FinsLink. To enable these functions, direct entry in the setup file (refer to *18-11 FinsLink Setup File: /etc/FgwQnx/FgwQnxFlk0.ini*) is required. (The setup file is not the Setup Utility. Set using the setup file editing function in Web Service Ver. 2.)

- The HLK_UNIT is required to use FinsLink with serially connected PLCs.
- When using FinsLink with serially connected PLCs, set the FinsLink time-out time longer than the HLK_UNIT timeout time.
- The virtual data link function of FinsLink is different from the data link functions of Controller Link and SYSMAC LINK.
- Data links can be created only with the DM and CIO areas of the PLC. Other areas cannot be used.
- FinsLink cannot be used with CompoWay/F devices, ID Controllers, or Productivity Monitors.

16-2 FinsLink Hardware Settings

The hardware settings required for FinsLink depend on the network that is being used. When using FinsLink via a serial connection, HLK must be set. When using it via Ethernet, ETN must be set. If data links are being used on Controller Link or SYSMAC LINK networks, then the event memory of the Open Network Controller is used. Even if data links are not being used, CLK must be set to use FinsLink via Controller Link and SLK must be set to use it via SYSMAC LINK.

Refer to the information on hardware settings in section for the network that is being used and connect the required boards and cables to the Open Network Controller.

16-3 FinsLink Settings

16-3-1 Startup Services

The FinsLink services must be registered.

1,2,3...

1. Select ***Startup Services*** from the Menu Window. The Startup Services Setting Window will be displayed showing the current settings.
2. Register the FinsLink services by selecting ***FLK□*** in the **Service Name** Box.

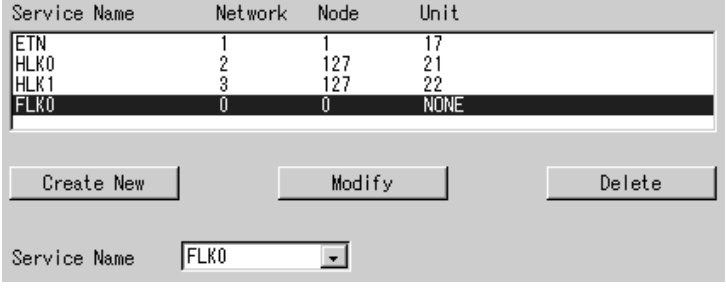

The above example shows registering FLK0.

Note FinsLink settings are made using the Open Network Controller Setup Utility, as described in the next section.

16-3-2 Starting the Setup Utility

Use the following procedure to start the Open Network Controller Setup Utility.

1,2,3...

1. Click ***The Setting Tool for Utilities*** in the Open Network Controller Maintenance Menu Window. (Refer to *17-1 Overview* for details on the Open

Network Controller Maintenance Menu Window.) The Setup Utility [Log On] Window will be displayed.

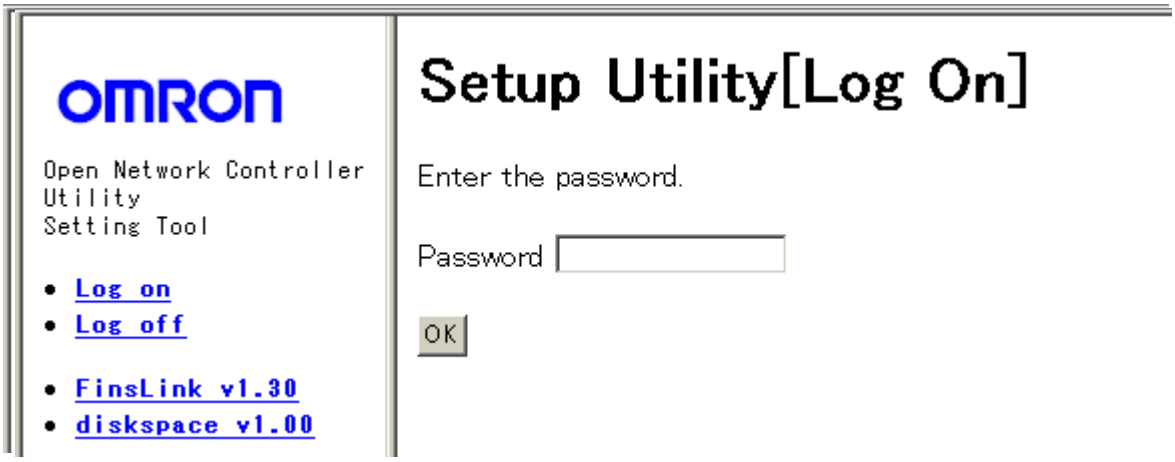

2. Input the password and click the **OK** Button. The default password is OMRON. Refer to *4-3 Basic Setting Tool Operations* for the procedure to change the password.

Note The password is the same one as used for the basic operation windows. If the password is changed for the Utility Window, it will be change for the basic operation windows as well.

The following display will appear if the password was input correctly.

16-3-3 FinsLink Parameters

The FinsLink parameters must be registered.

Select ***FinsLink v1.30*** from the FinsLink Setting Window shown above. The setting window will be displayed showing the current settings.

The currently registered FinsLink parameters will be displayed. The setting items will be displayed for each setting when selected with the cursor. Up to 128 settings can be made.

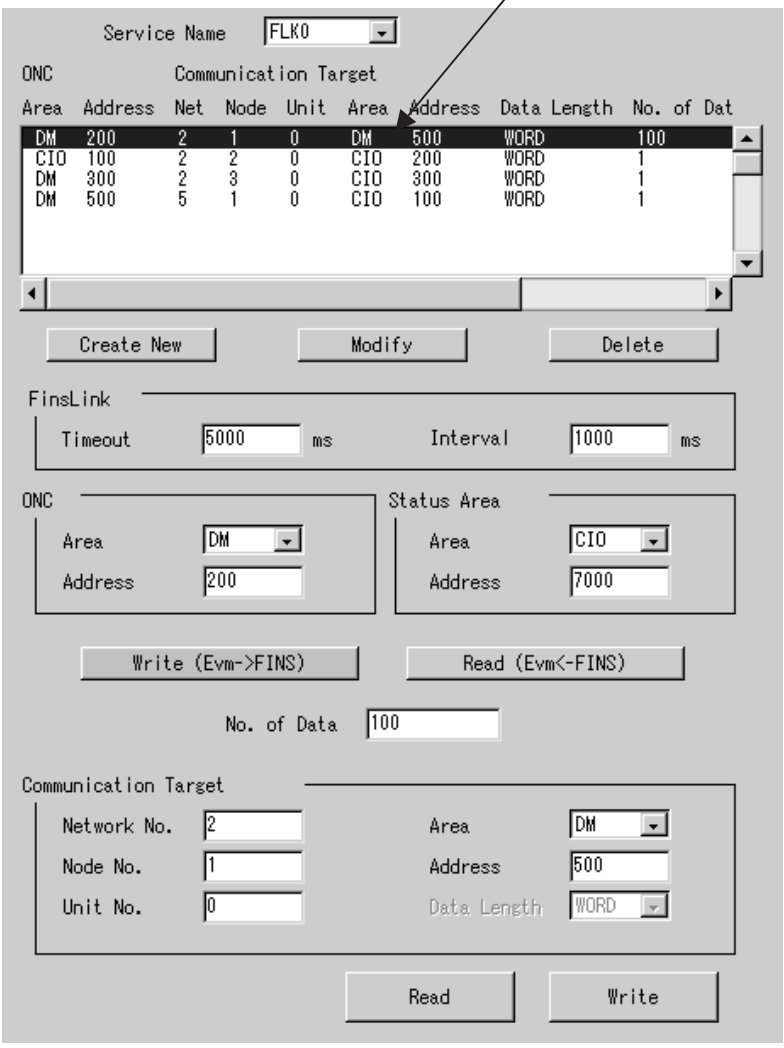

Setting Items

Item	Setting
Service Name	Select the service name. *FLK* will be displayed only if the Data Collection/Distribution Service Software (V1.xx) is installed.
FinsLink	Timeout: Set the communications timeout time in milliseconds between 0 and 9,999 ms. Interval: Set the length of the FINS send execution cycle between 1 and 3,600,000 ms. Setting the value too low places a load on the CPU, and has a negative effect on overall system performance.
ONC	Area: Set the area name in the Open Network Controller to DM or CIO. Address: Set the first address within the area to between 0 and 8191 for CIO and to between 0 and 65,535 for DM.
Status Area	Area: Set the area name in the Open Network Controller to DM or CIO. Address: Set the first address within the area to between 0 and 7934 for CIO and to between 0 and 65,278 for DM. A total of 258 words will be allocated for the FinsLink status area. Refer to *Status Area Details* following this table for details on the status area.
Write (Evm->FINS)	Click this button to write from the Open Network Controller to the communications target.
Read (Evm<-FINS)	Click this button to read from the communications target to the Open Network Controller.
No. of Data	Set the number of data to read or write between 1 and the maximum frame length supported for FINS commands.
Communications Target	Network No.: Set the network address of the communications partner. Node No.: Set the node address of the communications partner. Unit No.: Set the unit address of the communications partner. Area: Set the area in the communications partner. Address: Set the address within the area to between 0 and 8191 for CIO and to between 0 and 65,535 for DM. Data Length: Set the data length to WORD or DWORD. This setting is required for FLK only. The data length is always WORD for FLK0 and FLK1.

Note Up to 128 settings can be made.

Status Area Details

A total of 258 words are allocated as the FinsLink status area. The contents of the first 8 words are shown below. The contents of word 9 on repeat the data structure of words 4 to 7.

Word 1		Word 2	Word 3		Word 4		Word 5		Word 6		Word 7		Word 8	
(1)	(2)	(3)	(4)	(5)	(6)	(7)	(8)	(9)	(10)	(11)	(12)	(13)	(14)	(15)

No.	Contents
(1)	Operating status 00: Stopped 01: Running
(2)	Number of lines set (binary: 00 to FF (0 to 256))
(3)	Collection cycle (unit: ms) (binary: 0000 to FFFF (0 to 65,535))
(4)	Network address for line 1 (binary: 00 to FF (0 to 256))
(5)	Node address for line 1 (binary: 00 to FF (0 to 256))
(6)	Unit address for line 1 (binary: 00 to FF (0 to 256))
(7)	Communications status for line 1 00: Communications error 01: Communications normal
(8)	Network address for line 2 (binary: 00 to FF (0 to 256))
(9)	Node address for line 2 (binary: 00 to FF (0 to 256))
(10)	Unit address for line 2 (binary: 00 to FF (0 to 256))
(11)	Communications status for line 2 00: Communications error 01: Communications normal
(12)	Network address for line 3 (binary: 00 to FF (0 to 256))
(13)	Node address for line 3 (binary: 00 to FF (0 to 256))
(14)	Unit address for line 3 (binary: 00 to FF (0 to 256))
(15)	Communications status for line 3 00: Communications error 01: Communications normal
Etc.	Etc.
	Network address for line n (binary: 00 to FF (0 to 256))
	Node address for line n (binary: 00 to FF (0 to 256))
	Unit address for line n (binary: 00 to FF (0 to 256))
	Communications status for line n 00: Communications error 01: Communications normal

16-4 Diskspace Utility (Unit Ver. 1.1 or Later)

16-4-1 Diskspace Utility

The diskspace utility provides two functions. One function monitors the remaining disk space, and the other monitors the size of the file /tmp/syslog.

The remaining disk space monitor regularly checks the available space in either the internal disk or Memory Card, or both. If the available space drops below the specified size, an error message is output to notify the user. The error message is “PR0106: No Disk Space (A) Free Size = (B),” in which A indicates the disk position (e.g., /kd), and B indicates the remaining space in bytes.

The /tmp/syslog file size monitor periodically checks the size of the /tmp/syslog file. If the size reaches or exceeds the specified size, the /tmp/syslog file is renamed /tmp/syslog.old, and a new /tmp/syslog file is created. This function prevents the internal disk from becoming full due to a continuous increase in the size of the /tmp/syslog file. With this function, when the existing /tmp/syslog file is renamed /tmp/syslog.old, the previous /tmp/syslog.old file (the previous syslog data) is deleted.

Precautions

- When the remaining disk space monitor is enabled, the remaining disk space for the specified disk is checked in the specified cycle. The remaining space check processing confirms the capacity of the entire disk and searches for files on the disk. This increases the load on the ONC, which will affect the software used for high-speed disk access.
- The remaining disk space monitor will output an error if the remaining space drops below the set size for the specified disk. The error output, however, is a warning only, and the user must delete unnecessary files or use other measures to increase the remaining space.

16-5 Diskspace Settings (Unit Ver. 1.1 or Later)

16-5-1 Starting the Setup Utility

Use the following procedure to start the Open Network Controller Setup Utility.

1,2,3... 1. Click ***The Setting Tool for Utilities*** in the Open Network Controller Maintenance Menu Window. (Refer to *17-1 Overview* for details on the Open Network Controller Maintenance Menu Window.) The Setup Utility [Log On] Window will be displayed.

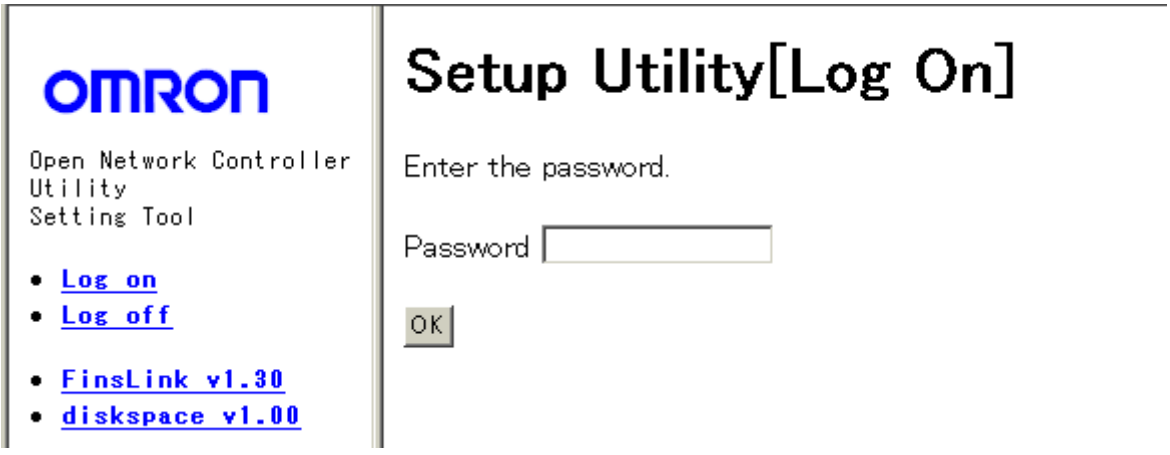

2. Input the password and click the **OK** Button. The default password is OMRON. Refer to *4-3 Basic Setting Tool Operations* for the procedure to change the password.

Note The password is the same one as used for the basic operation windows. If the password is changed for the Utility Window, it will be change for the basic operation windows as well.

The following display will appear if the password was input correctly.

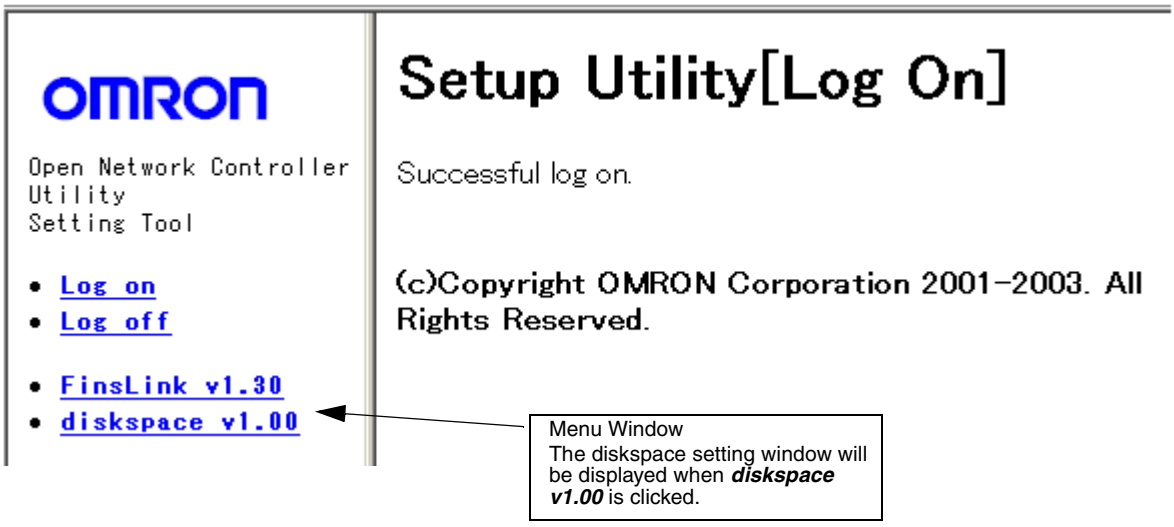

16-5-2 Diskspace Parameters

The diskspace parameters must be registered.

Select ***diskspace v1.00*** from the Setup Utility Setting Window shown above. The setting window will be displayed showing the current settings.

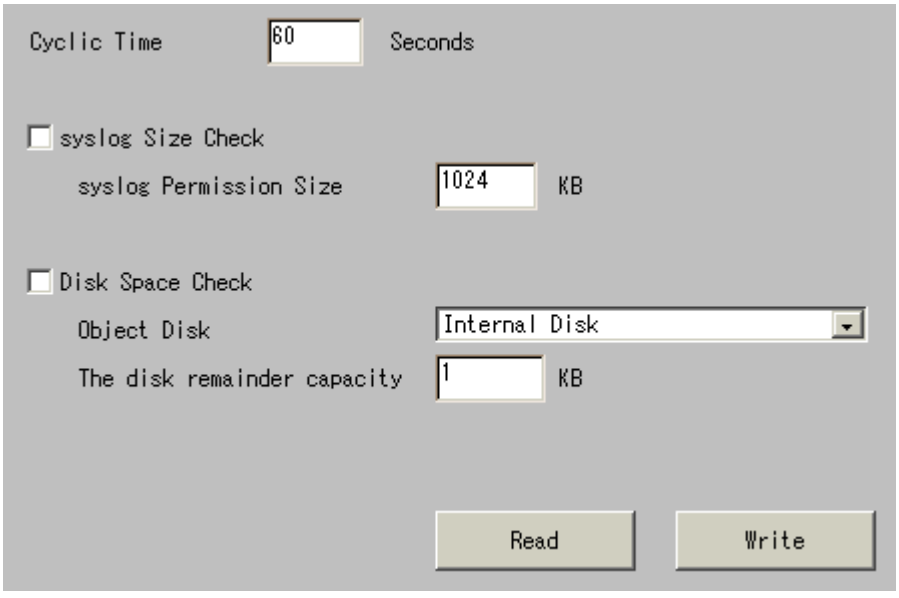

Setting Items

Item	Setting
Cycle Time	Set the interval for the cycle used to execute disk space monitoring and syslog size monitoring between 1 and 86,400 s (24 hours).
syslog Size Check	Select to enable the syslog size monitor.
syslog Permission Size	Set the maximum size for the /tmp/syslog file (default: 1,024 KB). When the /tmp/syslog file exceeds the size specified here, the existing /tmp/syslog file is renamed /tmp/syslog.old and a new /tmp/syslog file is created. **Note 1.** Set the remaining space in the disk where /tmp/syslog is to be saved to less than 50%. For details on confirming the current remaining disk space, refer to *17-9 Time Data Check* in *SECTION 17 Web Service Version 2 Maintenance Menu*. **Note 2.** The setting unit used in the Setup Utility is KB, but the size is saved in bytes in the setup file. **Note 3.** If the setting is less than 1,024 (less than 1 KB), the Setup Utility will automatically set 1,024 bytes. **Note 4.** If the setting cannot be divided by 1,024, the value below the decimal point will be ignored, but will be displayed in the Setup Utility. When saving, the value displayed in the Setup Utility will be multiplied and saved as a multiple of 1,024.
Disk Space Check	Select to enable the remaining disk space monitor.
Object Disk	Select either *internal disk*, *Memory Card*, or *Internal disk and Memory Card* as the type of disk to be monitored for remaining space.
The disk remainder capacity	Set the remaining disk space used to determine an error in KB units (default: 1 KB). The default setting is 1 KB, so increase the setting to suit the system for actual use. **Note 1.** The setting unit used in the Setup Utility is KB, but the size is saved in bytes in the setup file. **Note 2.** If the setting is less than 1,024 (less than 1 KB), the Setup Tool will automatically set 1,024 bytes. **Note 3.** If the setting cannot be divided by 1,024, the value below the decimal point will be ignored, but will be displayed in the Setup Utility. When saving, the value displayed in the Setup Utility will be multiplied be saved as a multiple of 1,024.

SECTION 17
Web Service Version 2 Maintenance Menu

This section describes the Web Service Version 2 used for remote maintenance of the Open Network Controller from a Web browser.

17-1 Overview 298
17-1-1 Web Service Version 2 298
17-1-2 Starting the Maintenance Menu 298
17-1-3 Maintenance Menu Functions. 300
17-2 Displaying and Editing Setup Files. 301
17-2-1 Files That Can Be Displayed and Edited 301
17-2-2 Displaying the Setup Menu 302
17-2-3 Displaying Setup Files 302
17-2-4 Editing Setup Files 303
17-2-5 Changing the Edit Password. 305
17-3 Reboot 306
17-3-1 Rebooting 306
17-3-2 Changing the Reboot Password 307
17-4 Error Log. 308
17-5 Monitoring LED Indicators. 309
17-6 System Profile 310
17-7 Task List 311
17-8 Disk Information 311
17-9 Time Data Check. 312
17-10 Clock Adjustment 312

17-1 Overview

17-1-1 Web Service Version 2

The Open Network Controller can be accessed from a Web browser running on a computer on a network. (Internet Explorer 5.5 or higher (SP2 or higher) is recommended.) The Web Service software provides the following functionality.

Open Network Controller Maintenance Functions

Open Network Controller settings can be made, the Open Network Controller can be restarted, and other operations can be performed from the Web browser.

17-1-2 Starting the Maintenance Menu

1,2,3...

1. Start the Web browser on the computer.
2. Enter the IP address or host name of the Open Network Controller followed by *WebService.html*, as in the following example, and press the **Enter** Key.

Note The default IP address of the Open Network Controller, 10.0.0.1, is shown above. Be sure to enter the correct IP address if it has been changed.

The first page of the Web Service site will be displayed if the Open Network Controller is connected to normally.

3. Click ***Go to Maintenance Menu (in English)***. The following Maintenance Menu Window will be displayed.

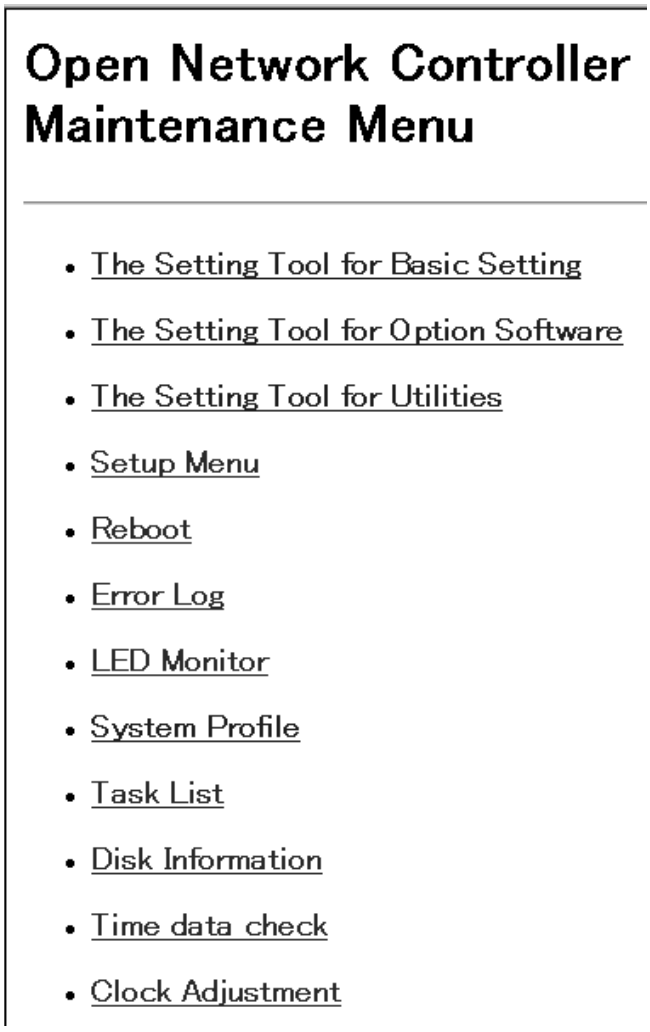

4. Select the desired item from the menu.

A table listing the functions of the menu items is provided in the next section. Refer to following sections for operating procedures.

17-1-3 Maintenance Menu Functions

Menu item	Submenu item	Function
The Setting Tool for Basic Setting	---	Displays the Setting Tool for the Open Network Controller in a new window. Refer to *SECTION 4 Software Settings (Basic)*.
The Setting Tool for Option Software	The Setting Tool for Data Collection/Distribution Software Version 2	Displays the Setting Tool for the Data Collection/Distribution Software (version 2) in a new window. This Setting Tool must be installed separately. Refer to the *Data Collection/Distribution Software Version 2 Operation Manual* (Cat. No.: V225-E1).
	The Setting Tool for RemoteKit	Displays the Setting Tool for the RemoteKit in a new window. This Setting Tool must be installed separately. Refer to the *RemoteKit Software Operation Manual* (Cat. No.: V221-E1).
The Setting Tool for Utilities	---	Displays the Setting Tool for FinsLink in a new window. Refer to *SECTION 16 Utilities*.
Setup Menu	View Setup Files	Displays the setup files for the Open Network Controller in a Web browser. Refer to *17-2 Displaying and Editing Setup Files*.
	Edit Setup Files	Enables editing and writing the setup files for the Open Network Controller in a Web browser. Refer to *17-2 Displaying and Editing Setup Files*.
	Change of the Edit Password	Changes the password for editing. Refer to *17-2 Displaying and Editing Setup Files*.
Reboot	---	Restarts the Open Network Controller. Refer to *17-3 Reboot*.
	Change of the Reboot Password	Changes the reboot passwords. Refer to *17-3 Reboot*.
Error Log	---	Displays the error log saved in the syslog file (\tmp\syslog). Refer to *17-4 Error Log*.
LED Monitor	---	Displays the error and other information shown on the Open Network Controller LED indicators. Refer to *17-5 Monitoring LED Indicators*.
System Profile	---	Displays the Open Network Controller model and version, the names and versions of installed options, and other information. Refer to *17-6 System Profile*.
Task List	---	Displays current processing information from the Open Network Controller. Functionality is the same as the Qnx sin command. Refer to *17-7 Task List*.
Disk Information	---	Displays information on all disks that can be accessed by the Open Network Controller. Refer to *17-8 Disk Information*.
Time Data Check	---	Display time data from the Open Network Controller and the client computer. Used to confirm the time on either. Refer to *17-9 Time Data Check*.
Clock Adjustment	---	Sets the Open Network Controller clock or client computer clock. Refer to *17-10 Clock Adjustment*.

17-2 Displaying and Editing Setup Files

The Setup Menu provides three functions: View Setup Files, Edit Setup Files, and Change of the Edit Password.

17-2-1 Files That Can Be Displayed and Edited

The files listed in the following table can be displayed and edited. They are listed in the order in which they are displayed. Other files can also be displayed and edited by inputting the name of the file.

File name	Settings
/hd/usr/web/testfile	A test file for displaying and writing files. The contents of this file will in no way affect the operating environment of the Open Network Controller. Use it as desired to test writing setup files.
/etc/config/sysinit.1	QNX startup setup file (See note 1.)
/etc/netstart	Subnet mask
/etc/hosts	IP addresses
/iproute	IP router
/etc/FgwQnx/FgwQnx.ini	Startup services, local network table, relay network table, COM port services
/etc/FgwQnx/FgwQnxEtn.ini	ETN_UNIT (for Ethernet)
/etc/FgwQnx/FgwQnxClk.ini	CLK_UNIT (for Controller Link)
/etc/FgwQnx/FgwQnxSlk.ini	SLK_UNIT (for SYSMAC LINK)
/etc/FgwQnx/FgwQnxBUSCS1.ini	BUSCS1_UNIT (for CS1 BUS)
/etc/FgwQnx/FgwQnxBUSCS1Map.ini	BUSCS1_UNIT (for CS1 BUS mapping)
/etc/FgwQnx/FgwQnxDrmPCI.ini	DRM_UNIT (for DeviceNet)
/etc/FgwQnx/scanlist.ini	DeviceNet scan list
/etc/FgwQnx/FgwQnxHlk.ini	HLK_UNIT (for SYSWAY C, SYSWAY CV, and CompoWay/F)
/etc/FgwQnx/HlkNetTbl.ini	Host Link address table (for SYSWAY C, SYSWAY CV, and CompoWay/F)
/etc/FgwQnx/FgwQnxHsv.ini	PT connection services
/etc/FgwQnx/FgwQnxRut.ini	RUT services
/etc/FgwQnx/FgwQnxFlk0.ini	FLK_UNIT (for FinsLink)

Note

1. The Open Network Controller may not start if any settings in this file are incorrect. Confirm any changes to be made to this file before writing them.
2. The settings in the above files can be made through the setting tools, such as the *The Setting Tool for Basic Setting* and *The Setting Tool for Option Software.* The setup procedure shown in this section edits the setup files directly. Any mistakes made in the settings can cause the Open Network Controller to operate incorrectly.

17-2-2 Displaying the Setup Menu

Select ***Setup Menu*** from the Maintenance Menu. The Setup Menu will be displayed.

Open Network Controller
Setup Menu

- View Setup Files
- Edit Setup Files
- Change of the Edit Password

17-2-3 Displaying Setup Files

Use the following procedure to display the contents of the setup files.

1,2,3... 1. Select ***View Setup Files*** from the Setup Menu. The following list of files will be displayed.

Open Network Controller
Setup File Viewer

/hd/usr/web/testfile	Sample File
/etc/config/sysinit.1	QNX Initial Setting
/etc/netstart	Subnet Mask
/etc/hosts	IP Address
/iproute	IP Router
/etc/FgwQnx/FgwQnx.ini	FGW Setting
/etc/FgwQnx/FgwQnxEtn.ini	NP for Ethernet
/etc/FgwQnx/FgwQnxClk.ini	NP for ControllerLink
/etc/FgwQnx/FgwQnxSlk.ini	NP for SysmacLink

2. Click the name of a setup file to display the contents of that file. Other files can also be opened in your Web browser by entering the file path and name in the **Enter File Name** Box at the bottom of the window and clicking the **OK** Button.

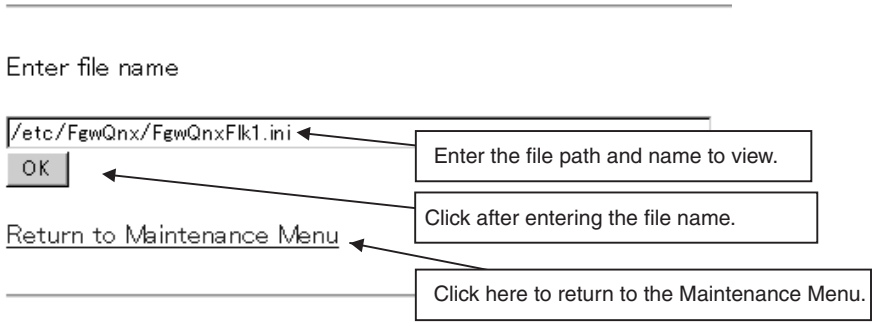

17-2-4 Editing Setup Files

The following procedure can be used to directly edit the setup files (text files), and write them to the Open Network Controller.

Note

1. The Open Network Controller may not operate if any settings in these files are incorrect. Confirm any changes to be made to a file before writing them.
2. No password is set for this menu item by default. We recommend setting a password to ensure safety. Refer to *17-2-5 Changing the Edit Password* for the setting procedure.

1,2,3...

1. Select ***Edit Setup Files*** from the Setup Menu. The following list of files will be displayed.

Open Network Controller
Setup File Editor

/hd/usr/web/testfile	Sample File
/etc/config/sysinit.1	QNX Initial Setting
/etc/netstart	Subnet Mask
/etc/hosts	IP Address
/iproute	IP Router
/etc/FgwQnx/FgwQnx.ini	FGW Setting
/etc/FgwQnx/FgwQnxEtn.ini	NP for Ethernet
/etc/FgwQnx/FgwQnxClk.ini	NP for ControllerLink
/etc/FgwQnx/FgwQnxSlk.ini	NP for SysmacLink

2. Click the name of a setup file to edit the contents of that file in a text box. Other files can also be opened for editing in your Web browser by entering the file path and name in the **Enter File Name** Box at the bottom of the window and click the **OK** Button.

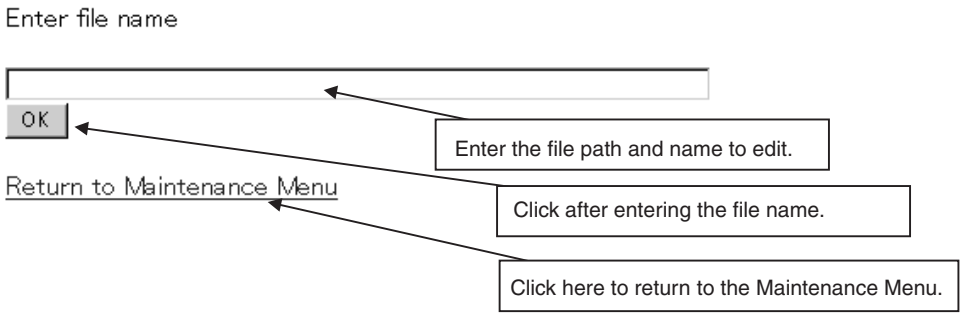

3. After finishing editing the file, click the **OK** Button at the bottom of the window.

   Note If a password has been set, enter the password in the **Password** Box before clicking the **OK** Button.

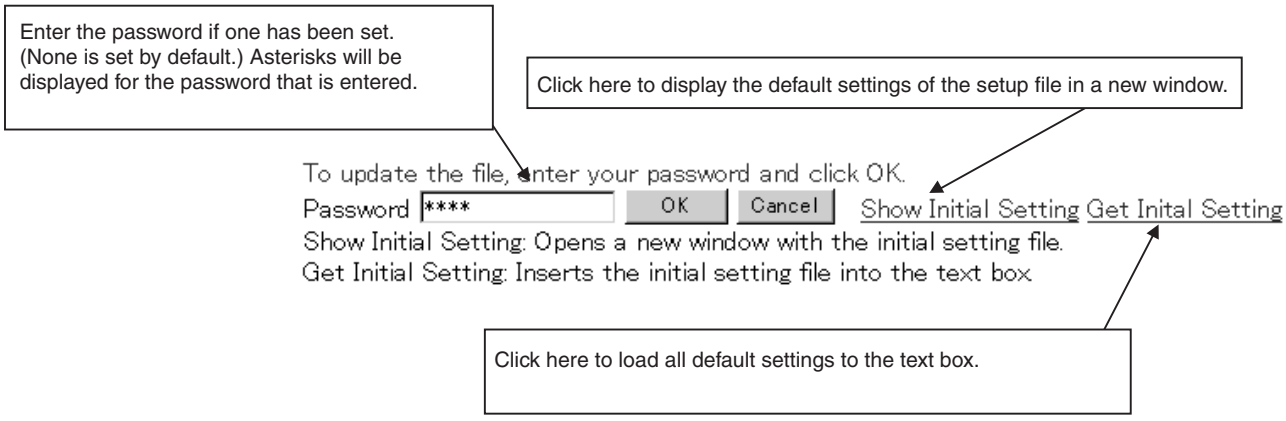

The following display will appear after the setup file has been written.

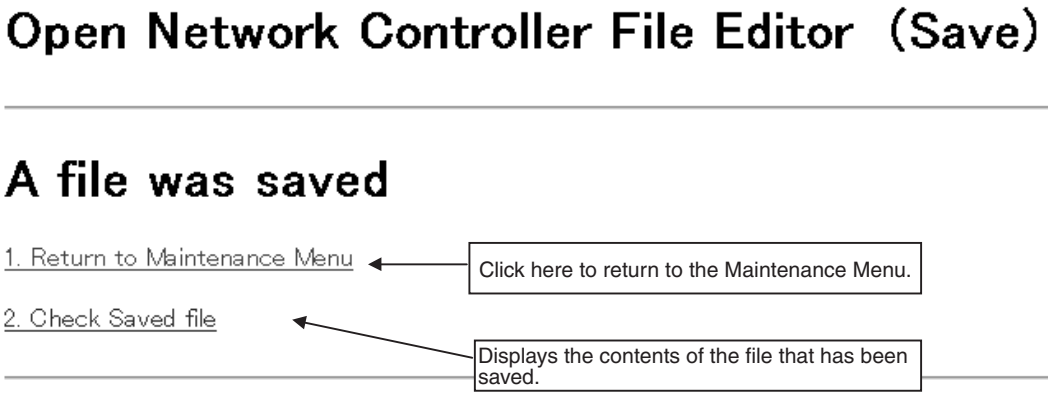

17-2-5 Changing the Edit Password

The following procedure can be used to change the password for editing setup files.

1,2,3... 1. Select ***Change of the Edit Password*** from the Setup Menu. The following window will be displayed.

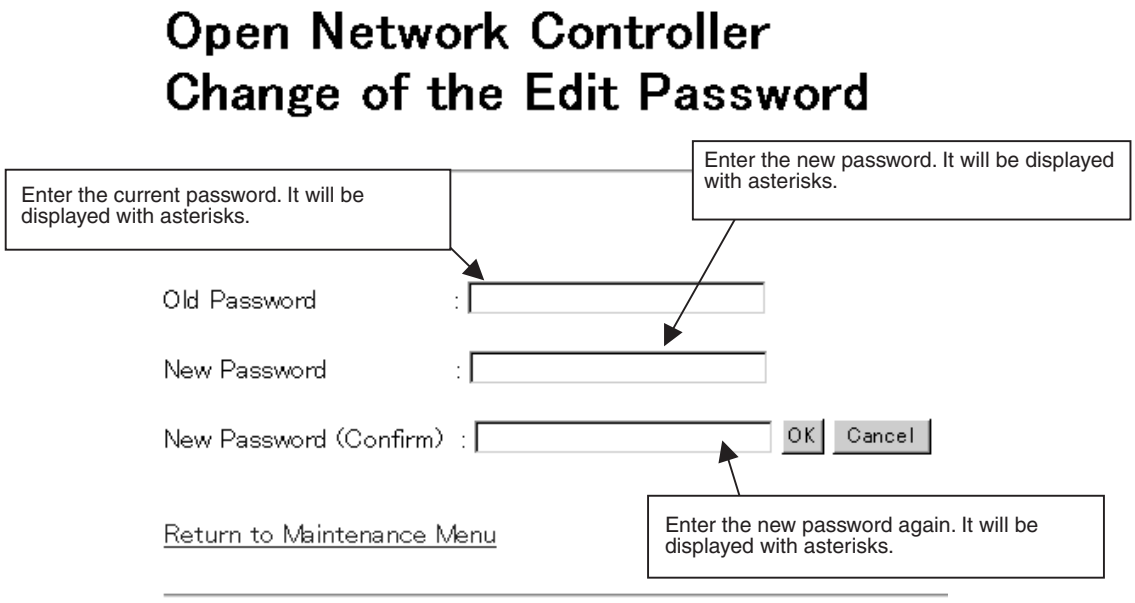

2. Enter the old password and the new password in the **Old Password, New Password,** and **New Password (Confirm)** Boxes and click the **OK** Button.

   If the **Cancel** Button is click, all of the boxes will be cleared.

   Up to 64 alphanumeric characters can be input.

   Note Passwords are case-sensitive. Enter them carefully.

- If the passwords are entered correctly, the following window will be display to indicate that the password has been changed.

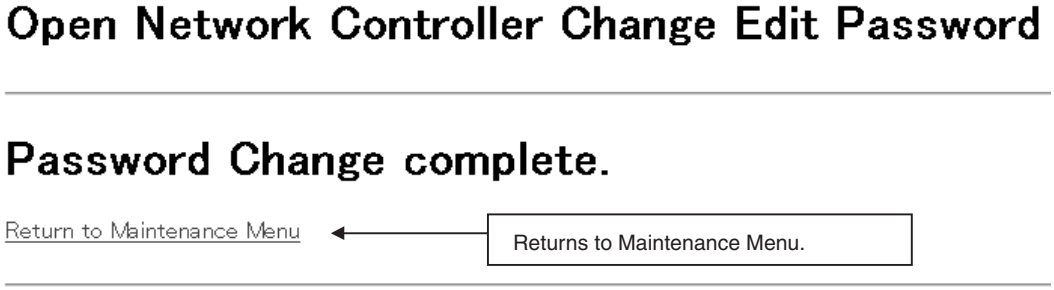

- If the passwords are not correct, a message will appear saying that the old or new passwords are not correct. To repeat the procedure to change the password, click ***Return to Change Edit Password.***

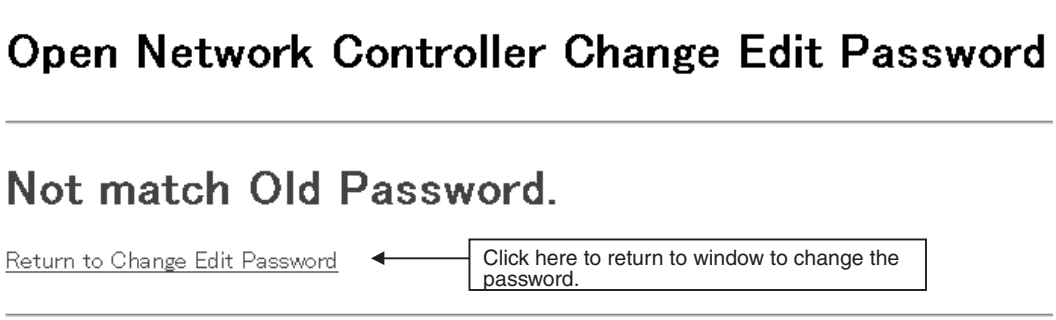

17-3 Reboot

The following procedure can be used to reboot the Open Network Controller. The window also enables changing the reboot password.

Note

1. Always confirm that rebooting the Open Network Controller will not adversely affect the controlled system before rebooting.
2. Web services will be interrupted when the Open Network Controller is rebooted until it was started again.

17-3-1 Rebooting

1,2,3...

1. Select ***Reboot*** from the Maintenance Menu. The following window will be displayed.

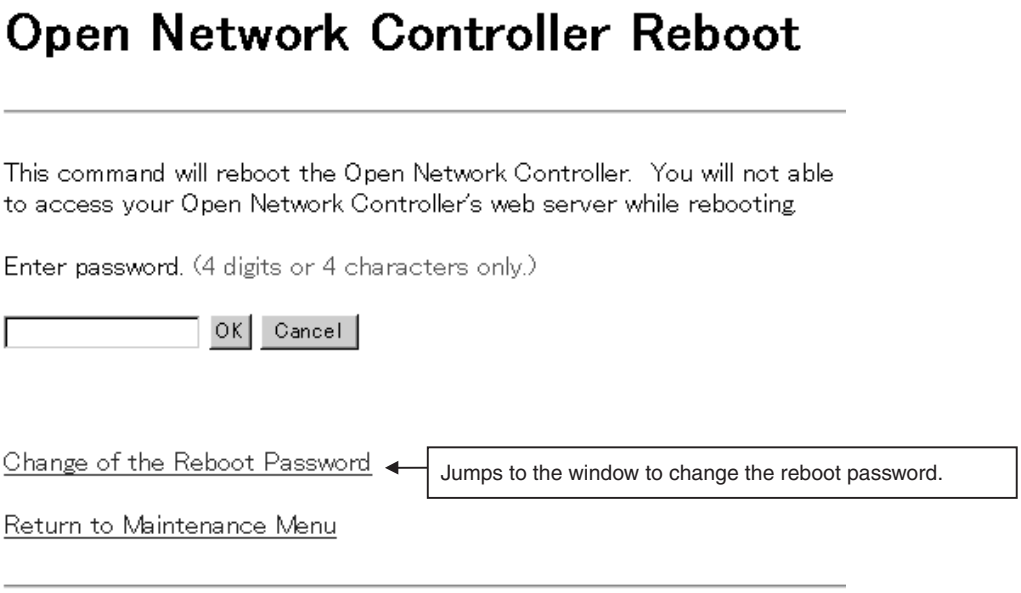

   Note Passwords are case-sensitive. Enter them carefully.

2. Input the password and click the **OK** Button.

   The default password is 1234.

   The following window will be displayed after the Open Network Controller has restarted.

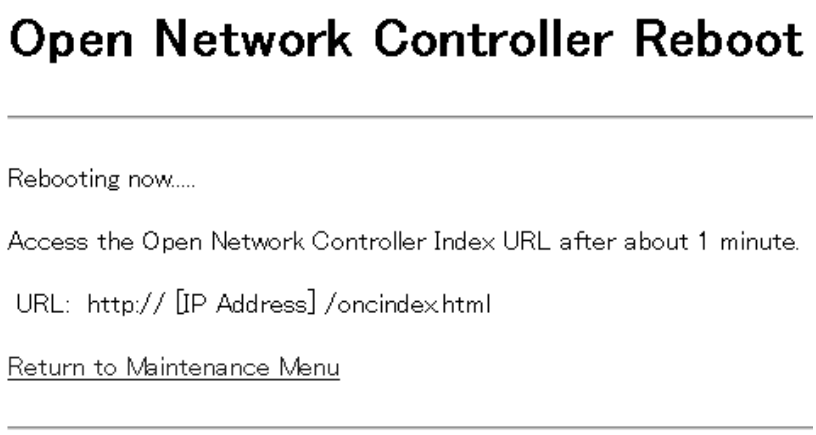

17-3-2 Changing the Reboot Password

1. Click **Change of the Reboot Password** in the Reboot Window. The following window will be displayed.

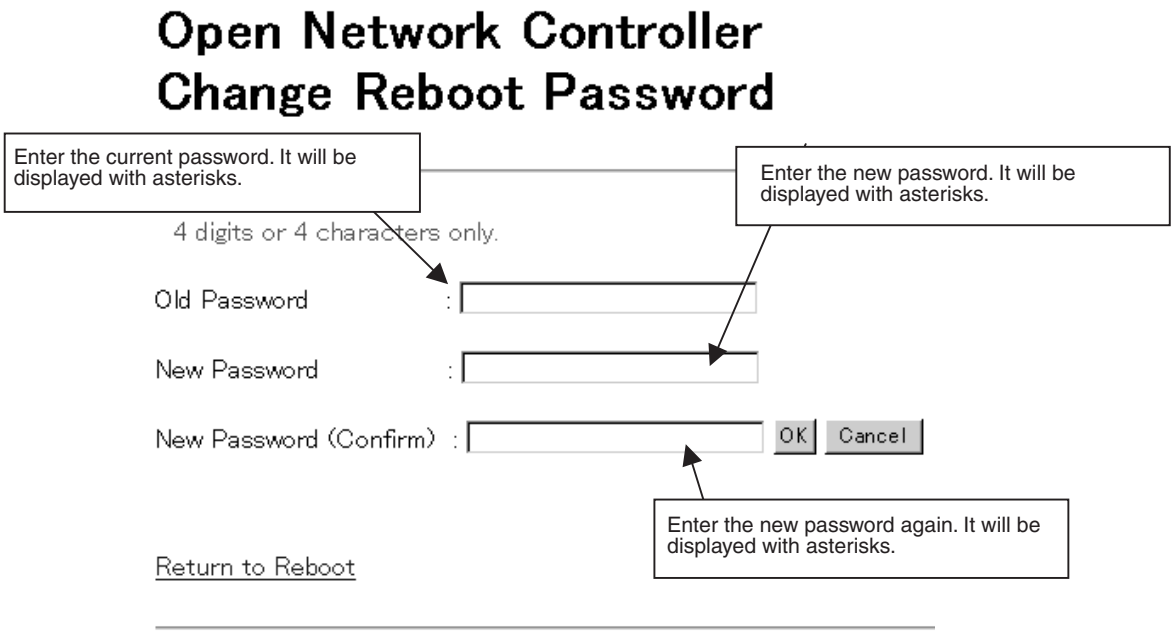

2. Enter the old password and the new password in the **Old Password, New Password,** and **New Password (Confirm)** Boxes and click the **OK** Button.

   If the **Cancel** Button is click, all of the boxes will be cleared.

   Note Passwords are case-sensitive. Enter them carefully.

   - If the passwords are entered correctly, the following window will be display to indicate that the password has been changed.

Open Network Controller Change Reboot Password

Password Change complete.

Return to Execute Reboot

Return to Maintenance Menu

- If the passwords are not correct, a message will appear saying that the old or new passwords are not correct. To repeat the procedure to change the password, click ***Return to Change Reboot Password.***

Open Network Controller Change Reboot Password

Not match Old Password.

Return to Change Reboot Password

Return to Maintenance Menu

17-4 Error Log

The following procedure can be used to display the contents of the syslog file stored in the Open Network Controller.

Select ***Error Log*** from the Maintenance Menu. The following window will be displayed.

Error Log Viewer

```
new_syslog_start
Feb  4 14:51:37 node<<1>> syslog: FGW-HLK0: ID=0024|  [HLK0] warning : receive timeout
Feb  4 14:51:37 node<<1>> syslog: FGW-HLK0: ID=0063|  [HLK0] warning : Retry count over
Feb  4 14:51:42 node<<1>> syslog: FGW-HLK0: ID=0024|  [HLK0] warning : receive timeout
Feb  4 14:51:42 node<<1>> syslog: FGW-HLK0: ID=0063|  [HLK0] warning : Retry count over
Feb  4 14:51:47 node<<1>> syslog: FGW-HLK0: ID=0024|  [HLK0] warning : receive timeout
```

Note Refer to *19-2 Error Messages* for the meaning of the contents of the syslog file (/tmp/syslog).

17-5 Monitoring LED Indicators

The LED Monitor Menu items provides the following two functions.

Name	Function
READ	Displays the error information given on the LED indicators on the Open Network Controller.
QUERY	Displays the network providers that are currently running.

Note

1. The network provide to monitor can be specified.
2. Refer to *19-2 Error Messages* for the meaning of error information.

1,2,3...

1. Select ***LED Monitor*** from the Maintenance Menu. The following window will be displayed.

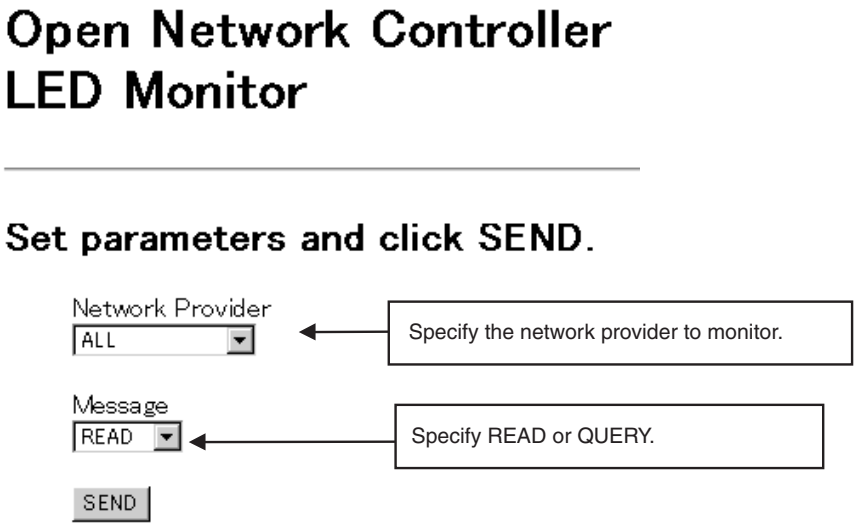

2. After setting the parameters, click the **SEND** Button.

READ Display

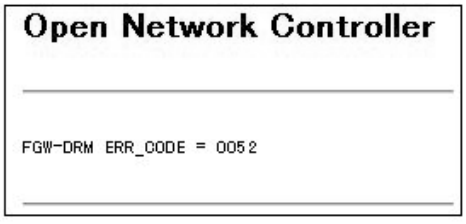

QUERY Displays

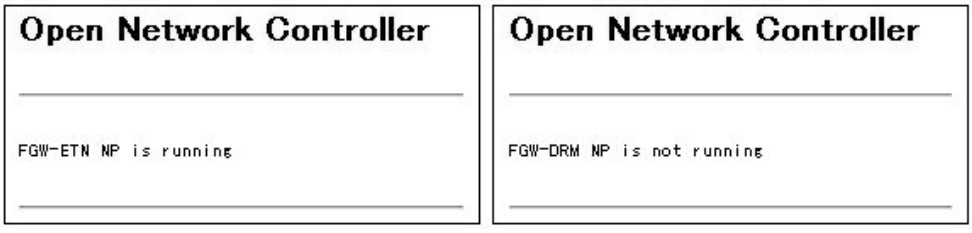

17-6 System Profile

The following procedure can be used to display the Open Network Controller model, Open Network Controller version, registered startup services, network settings, names of installed optional software, optional software versions, and other system information.

Select ***System Profile*** from the Maintenance Menu. The following window will be displayed.

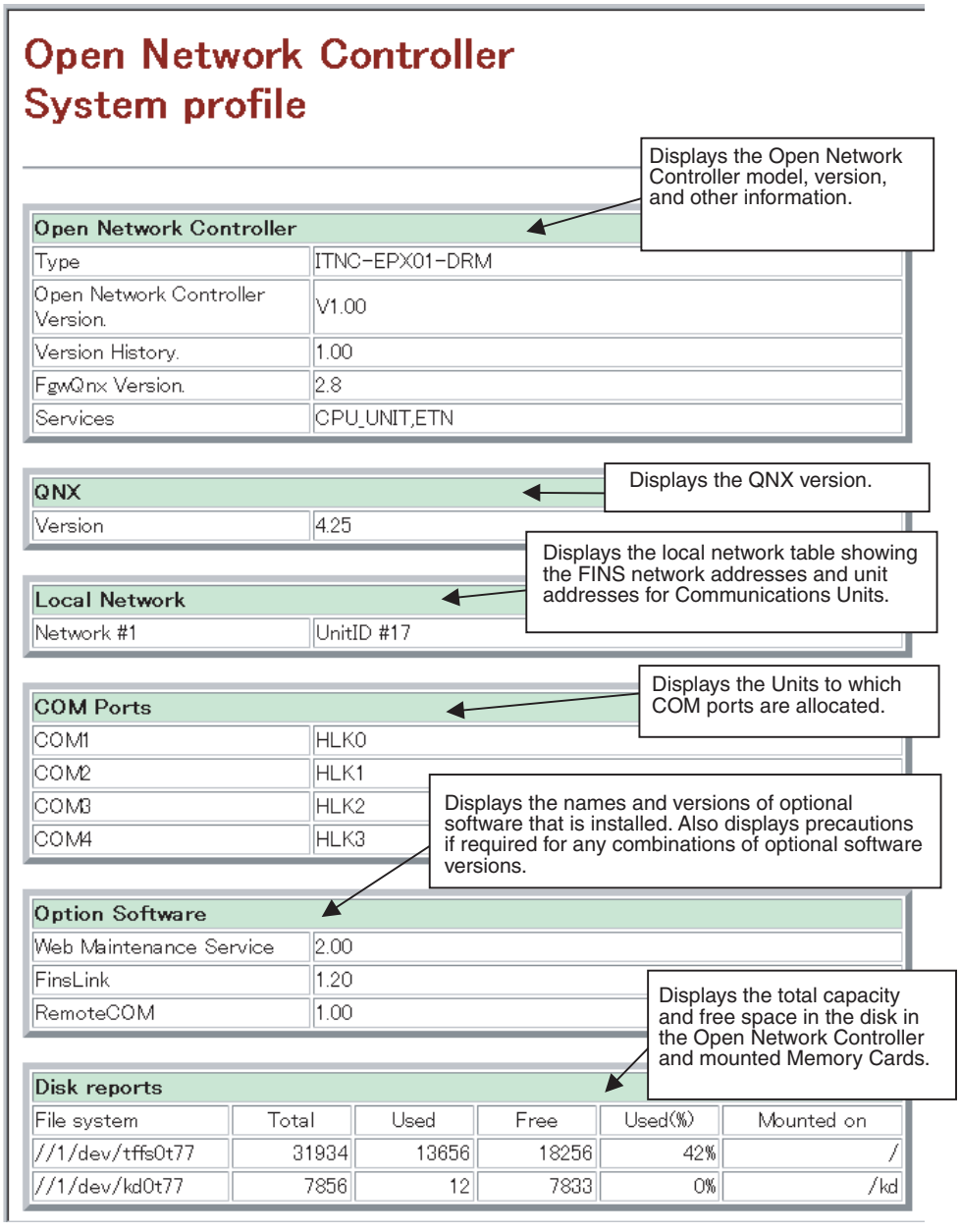

17-7 Task List

The following procedure can be used to display the tasks that are currently being executed by the Open Network Controller. The same results are given as those for the Qnx sin command. Eight items are displayed: section ID, process ID, program name, priority, program state, block, code memory size, and data memory size.

Select ***Task List*** from the Maintenance Menu. The following window will be displayed.

Open Network Controller
Task List

SID	PID	PROGRAM	PRI	STATE	BLK	CODE	DATA
--	--	Microkernel	---	-----	---	10524	0
0	1	sys/Proc32	30f	READY	---	118k	303k
0	3	sys/Slib32	10r	RECV	0	53k	4096
0	4	/bin/Fsys	10r	RECV	0	77k	425k
0	5	/bin/Fsys.diskonchip	10r	RECV	0	94k	86k
0	8	idle	0r	READY	---	0	40k
0	16	//1/bin/Dev	24f	RECV	0	32k	98k
0	22	//1/bin/Pipe	29r	RECV	0	16k	32k
0	23	//1/bin/Dev.ser	20r	RECV	0	16k	24k
0	24	//1/bin/Dev.ser	20r	RECV	0	16k	24k
0	25	//1/bin/Dev.ser	20r	RECV	0	16k	24k
0	26	//1/bin/Dev.ser	20r	RECV	0	16k	24k
0	27	//1/bin/Dev.pty	20r	RECV	0	12k	32k
0	30	//1/bin/Net	23r	RECV	0	32k	73k
0	32	//1/bin/Net.rtl	20r	RECV	0	40k	118k
0	39	//1/usr/ucb/Socket	29r	RECV	0	225k	237k
0	47	//1/usr/bin/syslogd	10o	RECV	0	36k	32k
0	51	//1/usr/ucb/inetd	10o	RECV	54	36k	32k
0	55	//1/*/bin/LedManage	23o	REPLY	0	45k	28k
0	56	//1/*/bin/ONC_ERR_LED7	23o	RECV	0	24k	24k
0	62	//1/*/bin/memcard.pnp	10o	REPLY	0	24k	24k
0	76	//1/*/FgwQnx/bin/batlow	10o	REPLY	0	61k	28k
1	77	//1/usr/ucb/slinger	10o	REPLY	39	20k	20k
0	83	//1/*/bin/diskspace	10o	REPLY	0	32k	20k
0	198	//1/bin/Fsys.eide	22r	RECV	0	61k	53k
1	265	//1/usr/ucb/slinger	10o	REPLY	22	20k	20k
1	266	//1/*/DispInfo.cgi	10o	WAIT	268	16k	20k
1	268	//1/bin/ksh	10o	WAIT	-1	94k	28k
1	269	//1/bin/sin	10o	REPLY	1	45k	49k

17-8 Disk Information

The following procedure can be used to display information on accessible disk space, including the file system name, total capacity, used space, free space, percentage used, and directory where the file system is mounted. The same results are given as those for the Qnx df -h command. Select ***Disk Information*** from the Maintenance Menu. The following window will be displayed.

Open Network Controller
Disk Information

File system (kb)	Total	User	Used	Free	Used	Mounted on
//1/dev/tffs0t77	31934	31913	13389	18523	41%	/
//1/dev/kd0t77	15728	15715	13348	2366	84%	/kd

17-9 Time Data Check

The following procedure can be used to check the time data in the Open Network Controller and the client PC connected to the Open Network Controller. This is used to see the difference in the time between the two devices. You can jump from this window to the window for setting the time in the Open Network Controller.

Select ***Time Data Check*** from the Maintenance Menu. The following window will be displayed.

Open Network Controller
Time data check

Time data of ONC and Client PC.

	YYYY/MM/DD hh:mm:ss
Time data of ONC	2003/02/04 15:23:02
Time data of Client PC	2003/02/04 15:22:50

Go to Clock Adjustment execution ← Click here to jump to the clock adjustment window.

Return to Maintenance Menu ← Click here to return to the Maintenance Menu.

17-10 Clock Adjustment

The following procedure can be used to set the time data in the Open Network Controller to that of the client PC.

1,2,3...

1. Select ***Clock Adjustment*** from the Maintenance Menu or select ***Go to Clock Adjustment Execution*** from the Time Data Check Window. The following window will be displayed.

   This window is refreshed every second. The time read from the client PC will be displayed in realtime in the text box.

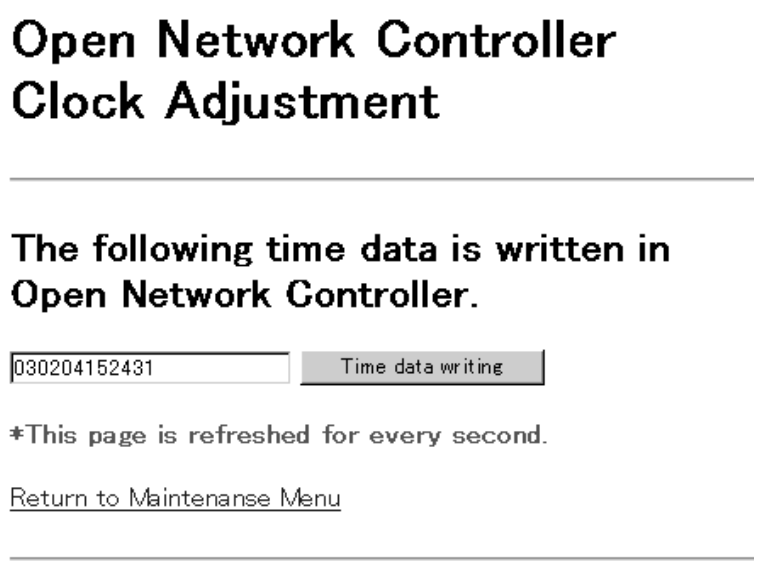

2. Click the ***Time Data Writing*** Button. The time displayed in the text box when the button is clicked will be written to the Open Network Controller clock. If the time data is set correctly, the following window will be displayed.

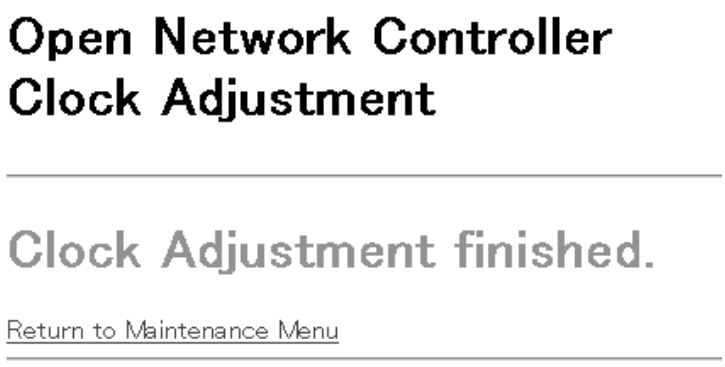

SECTION 18
Setup Files

This section describes the setup files.

18-1 Overview of Setup Files 316
18-1-1 Overview. 316
18-1-2 File List. 316
18-2 Basic Setup Files. 317
18-2-1 Host IP Addresses. 317
18-2-2 Host Name and Subnet Mask 317
18-2-3 IP Router. 318
18-2-4 Startup Services and Network Settings. 318
18-2-5 Open Network Controller System Status Settings 328
18-2-6 Open Network Controller System Status Mapping 329
18-3 ETN_UNIT Setup File: Ethernet Settings 330
18-4 CLK_UNIT Setup File: Controller Link Settings. 331
18-5 SLK_UNIT Setup File: SYSMAC LINK Settings 332
18-6 BUSCS1 Setup File. 333
18-6-1 CS1 Bus Board Settings 333
18-6-2 CS1 Bus Board Network Provider Mappings. 334
18-7 DRM_UNIT Settings 335
18-7-1 DeviceNet Settings 335
18-7-2 DeviceNet Scan List 337
18-8 HLK_UNIT Setup File 339
18-8-1 Host Link Settings 339
18-8-2 Host Link Network Table Settings 340
18-9 PT Connections Service Setup File. 341
18-9-1 PT Connection Settings 341
18-9-2 /etc/FgwQnx/FgwQnxHsv.ini Settings 342
18-10 RemoteCOM Setup File: /etc/FgwQnxRCOM.ini 343
18-11 FinsLink Setup File: /etc/FgwQnx/FgwQnxFlk0.ini 347
18-12 Diskspace Setup Files 348
18-12-1 File Settings for /etc/FgwQnx/diskspace.ini (Unit Ver. 1.1 or Later) 348
18-12-2 File Settings for /usr/Tool/bin/onc_command (Unit Ver. 1.1 or Later) 348

18-1 Overview of Setup Files

18-1-1 Overview

The setup files used to set the Open Network Controller operating environment are described in this section. The default setup files are described.

The contents of the setup files are changed using the Setup Tools. Always use the Setup Tools when changing the settings.

Note As a rule, do not edit the setup files directly. Incorrect settings will cause operating errors. Use the Setup Tools when changing settings.

18-1-2 File List

File name	Settings	Refer to
/etc/hosts	IP addresses and host names	*18-2 Basic Setup Files*
/etc/netstart	Subnet mask	
/iproute	IP router	
/etc/FgwQnx/FgwQnx.ini	Startup services and networks	
/etc/FgwQnx/FgwQnxONCSys.ini	Open Network Controller system status network provider	
/etc/FgwQnx/FgwQnxONCSysMap.ini	Open Network Controller system status network provider mapping	
/etc/FgwQnx/FgwQnxEtn.ini	Ethernet network provider	*18-3 ETN_UNIT Setup File: Ethernet Settings*
/etc/FgwQnx/FgwQnxClk.ini	Controller Link network provider	*18-4 CLK_UNIT Setup File: Controller Link Settings*
/etc/FgwQnx/FgwQnxSlk.ini	SYSMAC LINK network provider	*18-5 SLK_UNIT Setup File: SYSMAC LINK Settings*
/etc/FgwQnx/FgwQnxBUSCS1.ini	CS1 bus board network provider	*18-6 BUSCS1 Setup File*
/etc/FgwQnx/FgwQnxBUSCS1Map.ini	CS1 bus board network provider mapping	
/etc/FgwQnx/FgwQnxDrmPCI.ini	DeviceNet network provider	*18-7 DRM_UNIT Settings*
/etc/FgwQnx/scanlist.ini	DeviceNet scan list	
/etc/FgwQnx/FgwQnxHlk.ini	HLK network provider	*18-8 HLK_UNIT Setup File*
/etc/FgwQnx/HlkNetTbl.ini	HLK address table	
/etc/FgwQnx/FgwQnxRut.ini	PT connection service network providers	*18-9 PT Connections Service Setup File*
/etc/FgwQnx/FgwQnxHsv.ini		
/etc/FgwQnxRCOM.ini	RemoteCOM network provider	*18-10 RemoteCOM Setup File: /etc/FgwQnxRCOM.ini*
/etc/FgwQnx/FgwQnxFlk0.ini	FinsLink network provider	*18-11 FinsLink Setup File: /etc/FgwQnx/FgwQnxFlk0.ini*
/etc/FgwQnx/diskspace.ini	Diskspace settings	*18-12 Diskspace Setup Files*
/usr/Tool/bin/onc_command		

18-2 Basic Setup Files

18-2-1 Host IP Addresses

/etc/hosts contains a table of IP addresses and host names.

Note The Open Network Controller does not use DNS.

```
#
# Host Database
# This file should contain the addresses and aliases
# for local hosts that share this file.
# It is used only for "ifconfig" and other operations
# before the nameserver is started.
#
#
127.1 localhost localhost.my.domain
#
# Imaginary network.
10.0.0.1 onchost
```

Always set the IP address of the host name of the local node. The default host name of the Open Network Controller is "onchost".

Note: This must be set to the same address as ONCHOST in the /etc/netstart filed described later.

Set the IP address and host name of the other nodes as required by the applications. These settings are not necessarily required by the Controller.

18-2-2 Host Name and Subnet Mask

/etc/netstart contains the host name of the Open Network Controller and the subnet mask. Change the subnet mask in this file when required.

The IP address of the local node will be the IP address set for the host name in /etc/hosts.

```
#if you need SUBNETMASK add
#-subnetmask XXX.XXX.XXX.XXX
#in front of "up"
#[Example]
#/usr/ucb/ifconfig en1 onchost netmask 255.255.0.0 up
#export SOCK=$NODE
ONCHOST=onchost
ONCMASK=255.0.0.0
/bin/slay -f Socklet;
/usr/ucb/Socklet   $ONCHOST &
/usr/ucb/ifconfig en1 $ONCHOST netmask $ONCMASK up
/usr/ucb/ifconfig lo0 localhost up
/usr/bin/syslogd
/usr/ucb/inetd
/usr/ucb/routed
/iproute
```

Set the host name. This setting must be the same as that in /etc/hosts, described above.

Set the subnet mask according to the class of the IP address of the Open Network Controller.

18-2-3 IP Router

/iproute contains IP router addresses corresponding to the final network addresses. No settings are required unless IP routing is being used.

```
#ip route value setting.
#[format]
#/usr/ucb/route add NetworkAddress RouterAddress
#[Example]
#/usr/ucb/route add 10.0.0.0 10.0.0.3
#/usr/ucb/route add 192.168.36.0 10.0.0.3
```

This line specifies that the IP router for network address 192.168.36 is 10.0.0.3. The number sign (#) must be removed from the beginning of the line for the setting to be effective.

18-2-4 Startup Services and Network Settings

/etc/FgwQnx/FgwQnx.ini contains the FinsGateway QNX settings, including the startup services (network providers), unit addresses, and network settings. The sizes of the DM and CIO areas are also set.

```
;=========================================================
; (c) Copyright OMRON Corporation 1999-2003
;    All Rights Reserved
;=========================================================
; FgwQnx.ini - ini file for FinsGatewayQNX
;
[FgwLibMgr]
Qnx_PflagMask=

;---------------------------------------------------------
; SERVICES under SCM
;---------------------------------------------------------
;OtherServices= SPR,DRM0,CS1Inb0,Clk0,HLK2,RUT0,RUT1,Hsv0,Hsv1,

[Services]
Services=CPU_UNIT,ETN,HLK0,HLK1

;---------------------------------------------------------
; TICKSIZE FOR TIMER
;---------------------------------------------------------
[TickSize]
TickSize=500

;---------------------------------------------------------
; PRIORITY & SCHEDULE
; Schedule = FIFO|RoundRobin|OTHER
;---------------------------------------------------------
[Priority]
FgwLibMgr=23
CPU_UNIT=23
SPR=23
ETN=23
CS1Inb0=23
```

Set the services to be started. CPU_UNIT and ETN must always be set. Set the others according to your hardware configuration.

SRP:	ONC system NP (network provider)
DRM□:	DeviceNet NP
Clk□:	Controller Link NP
Slk□:	SYSMAC LINK NP
HLK□:	SYSWAY, SYSWAY-CV, and CompoWay/F NP
RUT□:	PT connection service NP
Hsv□:	PT connection service NP
BUSCS1:	CS1 bus board NP
RCOM□:	RemoteCOM connection service NP
FLK□:	FinsLink NP

```
DRM0=23
DRM1=23
HLK0=23
HLK1=23
HLK2=23
HLK3=23
RUT0=23
RUT1=23
RUT2=23
RUT3=23
IpLibMgr=23
Hsv0=23
Hsv1=23
Hsv2=23
Sch=23
Mua=23
BUSCS1=23
FLK0=23
FLK1=23
RCOM0=23
RCOM1=23
RCOM2=23
RCOM3=23
RCOM4=23
RCOM5=23
RCOM6=23
RCOM7=23
RCOM8=23
RCOM9=23
RCOM10=23
RCOM11=23
RCOM12=23
RCOM13=23
RCOM14=23
RCOM15=23

[Schedule]
FgwLibMgr=OTHER
CPU_UNIT=OTHER
SPR=OTHER
ETN=OTHER
CS1Inb0=RoundRobin
Clk0=RoundRobin
Slk0=RoundRobin
DRM0=RoundRobin
DRM1=RoundRobin
HLK0=OTHER
HLK1=OTHER
HLK2=OTHER
HLK3=OTHER
RUT0=OTHER
RUT1=OTHER
RUT2=OTHER
RUT3=OTHER
IpLibMgr=OTHER
```

```
Hsv0=OTHER
Hsv1=OTHER
Hsv2=OTHER
Sch=OTHER
Mua=OTHER
BUSCS1=OTHER
FLK0=OTHER
FLK1=OTHER
RCOM0=OTHER
RCOM1=OTHER
RCOM2=OTHER
RCOM3=OTHER
RCOM4=OTHER
RCOM5=OTHER
RCOM6=OTHER
RCOM7=OTHER
RCOM8=OTHER
RCOM9=OTHER
RCOM10=OTHER
RCOM11=OTHER
RCOM12=OTHER
RCOM13=OTHER
RCOM14=OTHER
RCOM15=OTHER

;-------------------------------------------------------
; FINS UNITID
;-------------------------------------------------------
[UnitID]
CPU_UNIT=0
SPR=16
ETN=17
Clk0=18
Slk0=18
CS1Inb0=19
BUSCS1=19
DRM0=20
DRM1=19
HLK0=21
HLK1=22
HLK2=23
HLK3=27
RUT0=21
RUT1=22
RUT2=23
RUT3=27
Hsv0=24
Hsv1=25
Hsv2=26
RCOM0=32
RCOM1=33
RCOM2=34
RCOM3=35
RCOM4=36
```

Unit address settings for each service. Do not change these.

```
RCOM5=37
RCOM6=38
RCOM7=39
RCOM8=40
RCOM9=41
RCOM10=42
RCOM11=43
RCOM12=44
RCOM13=45
RCOM14=46
RCOM15=47

[RouteTable]
;LocalNetworks=(Network# ,Unit#)
;RelayNetworks=(DestinationNetwork#,RelayNetwork#,RelayNode#)
LocalNetworks=(1,17)(2,21)(3,22)

RelayNetworks=

;-----------------------------------------------------
; COM
;-----------------------------------------------------
[COM]
COMs=4
COM1=HLK0
COM2=HLK1
COM3=HLK2
COM4=HLK3

[COM1]
Device=/dev/ser1
IRQ=4
[COM2]
Device=/dev/ser2
IRQ=3
[COM3]
Device=/dev/ser3
IRQ=5
[COM4]
Device=/dev/ser4
IRQ=7
```

FINS network routing table settings. These tables will be downloaded to the Controller Link Board at startup.

Local network table. Set the network address and unit address (Unit ID") for each NP being used.

Set the relay network table for the FINS network. Set three items on each line in the following order, separating each with a comma: Final network address, relay network address, relay node address. For example, (5,1,4) says to go through node 4 of network 1 to get to FINS network 5.

Set the NP to allocate to each COM port. The default settings are shown at the left (COM1 = HLK0, COM2 = HLK1, COM3 = HLK2, and COM4 = HLK3).
To allocate nothing to a port, delete the text after the equals sign.

```
;-------------------------------------------------------
; CPU_UNIT
;-------------------------------------------------------
[CPU_UNIT]
ImagePath=/usr/FgwQnx/bin/CPU_UNIT
TerminateType=Signal
TerminateData=2
StartType=auto
Qnx_PflagMask=
HardwareType=ITNC-EPX01-DRM
HardwareVersion=V1.00
RtcSetCommand=rtc -ls hw > /dev/null
FixedMemoryPhyAdress=0xC8000
FixedMemoryPhySize=131072
;.......................
; MEMORY ALIASES
;.......................
MemoryAliases=DM,CIO
DM=02
CIO=00,30
SRAM=32
File=01
Fins=03

;-------------------------------------------------------
; EventMemory
;-------------------------------------------------------
;.......................
; DM
;.......................
[EmMemory_DM]
NumChannels=65536
NumConditions=200
AccessMethod=EmMemory
NeedMapMemory=TRUE
IsVolatile=FALSE
;.......................
; CIO
;.......................
[EmMemory_CIO]
NumChannels=8192
NumConditions=200
AccessMethod=EmMemory
NeedMapMemory=TRUE
IsVolatile=FALSE
;.......................
; SRAM
;.......................
[EmMemory_SRAM]
NumChannels=65214
NumConditions=200
AccessMethod=EmSRAM
FixedMemoryOffset=0
NeedMapMemory=FALSE
IsVolatile=FALSE
```

Set the number of words to allocate to the DM area in the Open Network Controller.
Up to 65,536 words can be allocated.

Set the number of words to allocate to the CIO area in the Open Network Controller.
Up to 8,192 words can be allocated.

```
;.......................
; EmFileAccess
;.......................
[EmMemory_File]
NumChannels=2048
NumConditions=200
AccessMethod=EmFileAccess
NeedMapMemory=FALSE
IsVolatile=TRUE
FileName=/tmp/FgwQnx.sample
;.......................
; EmFinsRemote
;.......................
[EmMemory_Fins]
NumChannels=2048
NumConditions=200
AccessMethod=EmFinsRemote
NeedMapMemory=FALSE
IsVolatile=TRUE
FinsAddress=0.0.0
TimeoutSecond=2
VariableType=02
VariableOffset=0

;-------------------------------------------------------
; ONCSys
;-------------------------------------------------------
[SPR]
ImagePath=/usr/FgwQnx/bin/Spr
TerminateType=Signal
TerminateData=2
StartType=auto
SubProfile=/etc/FgwQnx/FgwQnxONCSys.ini

;-------------------------------------------------------
; ETN
;-------------------------------------------------------
[ETN]
ImagePath=/usr/FgwQnx/bin/etn
TerminateType=Signal
TerminateData=2
StartType=auto
SubProfile=/etc/FgwQnx/FgwQnxEtn.ini

;-------------------------------------------------------
; SockProxy
;-------------------------------------------------------
[SockProxy]
ImagePath=/usr/FgwQnx/bin/FgwSockServer
TerminateType=Signal
TerminateData=2
StartType=auto
SubProfile=/etc/FgwQnx/FgwQnxSpy.ini
Qnx_PflagMask=
```

```
;-----------------------------------------------------
; CLK
;-----------------------------------------------------
[Clk0]
ImagePath=/usr/FgwQnx/bin/Clk
TerminateType=Signal
TerminateData=2
StartType=auto
CommandLine=Clk -n 0
SubProfile=/etc/FgwQnx/FgwQnxClk.ini
LedControl=0

;-----------------------------------------------------
; SLK
;-----------------------------------------------------
[Slk0]
ImagePath=/usr/FgwQnx/bin/Slk
TerminateType=Signal
TerminateData=2
StartType=auto
CommandLine=Slk -n 0
SubProfile=/etc/FgwQnx/FgwQnxSlk.ini
LedControl=0

;-----------------------------------------------------
; CS1Inb
;-----------------------------------------------------
[CS1Inb0]
ImagePath=/usr/FgwQnx/bin/CS1Inb
TerminateType=Signal
TerminateData=2
StartType=auto
CommandLine=CS1Inb -n 0
SubProfile=/etc/FgwQnx/FgwQnxCS1Inb.ini

;-----------------------------------------------------
; DRM
;-----------------------------------------------------
[DRM0]
ImagePath=/usr/FgwQnx/bin/DRM
TerminateType=Signal
TerminateData=2
StartType=auto
LedControl=1
CommandLine=DRM -n 0
SubProfile=/etc/FgwQnx/FgwQnxDrmPCI.ini
[DRM1]
ImagePath=/usr/FgwQnx/bin/DRM
TerminateType=Signal
TerminateData=2
StartType=auto
CommandLine=DRM -n 1
SubProfile=/etc/FgwQnx/FgwQnxDrmPCI.ini
```

```
;-----------------------------------------------------
; HLK
;-----------------------------------------------------
[HLK0]
ImagePath=/usr/FgwQnx/bin/hlk
TerminateType=Signal
TerminateData=2
StartType=auto
CommandLine=hlk -n 0
SubProfile=/etc/FgwQnx/FgwQnxHlk.ini
[HLK1]
ImagePath=/usr/FgwQnx/bin/hlk
TerminateType=Signal
TerminateData=2
StartType=auto
CommandLine=hlk -n 1
SubProfile=/etc/FgwQnx/FgwQnxHlk.ini
[HLK2]
ImagePath=/usr/FgwQnx/bin/hlk
TerminateType=Signal
TerminateData=2
StartType=auto
CommandLine=hlk -n 2
SubProfile=/etc/FgwQnx/FgwQnxHlk.ini
[HLK3]
ImagePath=/usr/FgwQnx/bin/hlk
TerminateType=Signal
TerminateData=2
StartType=auto
CommandLine=hlk -n 3
SubProfile=/etc/FgwQnx/FgwQnxHlk.ini

;-----------------------------------------------------
; RUT
;-----------------------------------------------------
[RUT0]
ImagePath=/usr/FgwQnx/bin/RemoteUart
TerminateType=Signal
TerminateData=2
StartType=auto
CommandLine=RemoteUart -n 0
SubProfile=/etc/FgwQnx/FgwQnxRut.ini
[RUT1]
ImagePath=/usr/FgwQnx/bin/RemoteUart
TerminateType=Signal
TerminateData=2
StartType=auto
CommandLine=RemoteUart -n 1
SubProfile=/etc/FgwQnx/FgwQnxRut.ini
[RUT2]
ImagePath=/usr/FgwQnx/bin/RemoteUart
TerminateType=Signal
TerminateData=2
StartType=auto
CommandLine=RemoteUart -n 2
SubProfile=/etc/FgwQnx/FgwQnxRut.ini
```

```
[RUT3]
ImagePath=/usr/FgwQnx/bin/RemoteUart
TerminateType=Signal
TerminateData=2
StartType=auto
CommandLine=RemoteUart -n 3
SubProfile=/etc/FgwQnx/FgwQnxRut.ini

;-----------------------------------------------------
; HSV
;-----------------------------------------------------
[Hsv0]
ImagePath=/usr/FgwQnx/bin/hsv
TerminateType=Signal
TerminateData=2
StartType=auto
CommandLine=hsvUnit -n 0
SubProfile=/etc/FgwQnx/FgwQnxHsv.ini
Hsv0Unit=Hsv0/Hsv0Unit
[Hsv1]
ImagePath=/usr/FgwQnx/bin/hsv
TerminateType=Signal
TerminateData=2
StartType=auto
CommandLine=hsvUnit -n 1
SubProfile=/etc/FgwQnx/FgwQnxHsv.ini
Hsv1Unit=Hsv1/Hsv1Unit
[Hsv2]
ImagePath=/usr/FgwQnx/bin/hsv
TerminateType=Signal
TerminateData=2
StartType=auto
CommandLine=hsvUnit -n 2
SubProfile=/etc/FgwQnx/FgwQnxHsv.ini
Hsv1Unit=Hsv2/Hsv2Unit

;-----------------------------------------------------
; IpLibMgr
;-----------------------------------------------------
[IpLibMgr]
ImagePath=/usr/FgwQnx/bin/ipLibMgr
TerminateType=Signal
TerminateData=2
StartType=auto
SubProfile=/etc/FgwQnx/FgwQnxIpLibMgr.ini
```

```
;-----------------------------------------------------
; Sch
;-----------------------------------------------------
[Sch]
ImagePath=/usr/FgwQnx/bin/schIp
TerminateType=Signal
TerminateData=2
StartType=auto
SubProfile=/etc/FgwQnx/FgwQnxSch.ini

;-----------------------------------------------------
; Mua
;-----------------------------------------------------
[Mua]
ImagePath=/hd/usr/mail/bin/muaIp
TerminateType=Signal
TerminateData=2
StartType=auto
SubProfile=/hd/usr/mail/etc/FgwQnxMua.ini

;-----------------------------------------------------
; BUSCS1
;-----------------------------------------------------
[BUSCS1]
ImagePath=/usr/FgwQnx/bin/BUSCS1
TerminateType=Signal
TerminateData=2
StartType=auto
SubProfile=/etc/FgwQnx/FgwQnxBUSCS1.ini

;-----------------------------------------------------
; FLK
;-----------------------------------------------------
[FLK0]
ImagePath=/usr/FgwQnx/bin/finslink
TerminateType=Signal
TerminateData=2
StartType=auto
CommandLine=finslink -n 0
SubProfile=/etc/FgwQnx/FgwQnxFlk0.ini
[FLK1]
ImagePath=/usr/FgwQnx/bin/finslink
TerminateType=Signal
TerminateData=2
StartType=auto
CommandLine=finslink -n 1
SubProfile=/etc/FgwQnx/FgwQnxFlk1.ini
```

```
;-------------------------------------------------------
; RCOM
;-------------------------------------------------------
[RCOM0]
ImagePath=/usr/FgwQnx/bin/RCOMunit
TerminateType=Signal
TerminateData=2
StartType=auto
CommandLine=RCOMunit -n 0
SubProfile=/etc/FgwQnx/FgwQnxRCOM.ini
      :
      :
      :
[RCOM15]
ImagePath=/usr/FgwQnx/bin/RCOMunit
TerminateType=Signl
TerminateData=2
StartType=auto
CommandLine=RCOMunit -n 15
SubProfile=/etc/FgwQnx/FgwQnxRCOM.ini
```

18-2-5 Open Network Controller System Status Settings

/etc/FgwQnx/FgwQnxONCSys.ini contains settings for the Open Network Controller system status network provider.

```
;=======================================================
; (c) Copyright OMRON Corporation 2003
;    All Rights Reserved
;=======================================================
; FgwQnxONCSys.ini - ini file for ONCSys
;
[SPR]
ImagePath=/usr/FgwQnx/bin/SramErr

;Refresh Interval of SystemStatu
RefreshTimer=1000

;Map AreaName of SystemStatus
MemoryName=DM

;Offset of SystemStatusArea
MemoryOffset=65527

;Restore Flag 0:No't Exec 1:Exec
StartType=0

;MemoryUnit StatusMemory TimeMemory Shutdown
RefreshInterval=1,1,1,1

;Time of RefreshInterval Refrect 0:No't Exec 1:Exec
RefreshOnline=1
```

Refresh interval setting for memory unit function, status memory function, clock memory functions, and shutdown function. The setting range is 1 to 9,999 ms.

System status mapping area allocations.
Area names: CIO or DM
Offsets: CIO = 0 to 8183, DM = 0 to 65527

18-2-6 Open Network Controller System Status Mapping

/etc/FgwQxn/FgwQxnONCSysMap.ini contains settings for the Open Network Controller system status network provider mapping.

```
;=====================================================
; (c) Copyright OMRON Corporation 2003
;     All Rights Reserved
;=====================================================
; FgwQnxONCSysMap.ini - ini file for ONCSys Mapping
;
[MapNum]
Maps=0
[Map]
; Flag, Name1, Name1Offset, Name2, Name2Offset, Size(CH), Direct
;1,DM,0,SRAM,0,10,0
;2,CIO,0,SRAM,10,9,1
;3,DM,0,HM,0,10,1
[SPR]
MyLine=1,2,3

;Exec RefreshTimer
RefreshLine=1

;Exec BackUpRestoreFlag ON
NonRefreshLine=2

;Exec Only ONC Start And StartType=1
StartLine=3
```

18-3 ETN_UNIT Setup File: Ethernet Settings

/etc/FgwQnx/FgwQnxEtn.ini contains settings for the Ethernet network provider.

```
;=====================================================
; (c) Copyright OMRON Corporation 1999-2003
;    All Rights Reserved
;=====================================================
; FgwQnxEtn.ini - ini file for ETN
;
[FINS]
NodeID=1
UdpPortNumber=

[IpTable]
;IpExchangeAuto - automatically assign peer IP address
; peer address <- <MyIpAddr> & 0xffffff00 | <peer node>
;   value: 1 - enable this function
;   value: 0 - disable this function
IpExchangeAuto=1
IpTable=(2,10.0.0.2)

IpTableProxy=
```

Set the FINS node address for the local node on the Ethernet network to between 1 and 253.

Set the UDP port number to use for Ethernet as a decimal value. UDP port number 9600 will be used if the setting is omitted. Normally, 9600 should be used.

Set the IP address corresponding to the FINS node address for each node on the Ethernet network. Set one line for each node containing the node address and then the IP address separated by a comma. Up to 32 nodes can be set.
Settings can be made using host names set in /etc/hosts, e.g., (2,oncclient).

Set the IP address to send FINS data to for any destination for which the IP address is not known. This setting is not required.

18-4 CLK_UNIT Setup File: Controller Link Settings

/etc/FgwQnx/FgwQnxClk.ini contains settings for the Controller Link network provider. Only the node address and baud rate are set in this file.

The Controller Link Board must be set to agree with the settings in this file.

```
;=====================================================
; (c) Copyright OMRON Corporation 1999-2003
;    All Rights Reserved
;=====================================================
; FgwQnxClk.ini - ini file for CLK
;
[Clk0]
DriverImage=/usr/FgwQnx/bin/Clkdrv
BoardName=3G8F7-CLK21
SystemSw=0xB3      <- Set the baud rate. 0x*1: 500 Kpbs, 0x*2: 1 Mpbs, 0x*3: 2 Mpbs
SystemSw2=0x00
MaxLink=62000
NodeID=30          <- Set the node address between 1 and 62.
RefreshMethod=0
RefreshTimer=100
TriggerType=0
SyncClockTimer=0
Sender=ClkSender
Receiver=ClkReceiver
Driver=ClkDriver
Trigger=Triggerprocess
TriggerMethod=0
TriggerMsg=I/O_Trigger
MyTrigger1=I/O
MyTrigger2=Trigger_I/O
Status_Net_Name=CIO
Status_Net_Offset=0
Status_Net_Size=0
Status_Link_Name=CIO
Status_Link_Offset=0
Status_Link_Size=0
Table_Link_Name=DM
Table_Link_Offset=0
Table_Link_Size=0
```

Note Set the baud rate to the same values as the other nodes (e.g., Controller Link Units) on the Controller Link network.

18-5 SLK_UNIT Setup File: SYSMAC LINK Settings

/etc/FgwQnx/FgwQnxSlk.ini contains settings for the SYSMAC LINK network provider.

```
;=====================================================
; (c) Copyright OMRON Corporation 2000-2003
;     All Rights Reserved
;=====================================================
; FgwQnxSlk.ini - ini file for SLK
;
[Slk0]
DriverImage=/usr/FgwQnx/bin/Slkdrv
BoardName=3G8F7-SLK21
SystemSw=0 x 80
MaxLink=32000
NodeID=1          <- Set the node address between 1 and 62.
RefreshMethod=0
RefreshTimer=100  <- Set the refresh interval between 1 and 9,999 ms.
TriggerType=0
SyncClockTimer=0
Sender=SlkSender
Receiver=SlkReceiver
Driver=SlkDriver
Trigger=Triggerprocess
TriggerMethod=0
Trigger_Msg=I/O_Trigger
MyTrigger1=I/O
MyTrigger2=Trigger_I/O
Status_Net_Name=CIO
Status_Net_Offset=0
Status_Net_Size=0
Status_Link_Name=CIO
Status_Link_Offset=0
Status_Link_Size=0
Table_Link_Name=DM
Table_Link_Offset=0
Table_Link_Size=0
```

18-6 BUSCS1 Setup File

18-6-1 CS1 Bus Board Settings

/etc/FgwQnx/FgwQnxBUSCS1.ini contains settings for the CS1 Bus Board network provider.

```
;=========================================================
; (c) Copyright OMRON Corporation 2000-2003
;    All Rights Reserved
;=========================================================
; FgwQnxBUSCS1.ini - ini file for CS1 BUS I/F Board
;
[BUSCS1]
DriverImage=/usr/FgwQnx/bin/BUSCS1pci
MapFile=/etc/FgwQnx/FgwQnxBUSCS1Map.ini
NodeID=1
Memaddr=0xcc000
IOaddr=0x398
IRQ=12
RefreshMethod=0
RefreshTimer=10
Trigger=0
ResetMethod=0
SyncClock=0
StatusArea=CIO
StatusOffset=6000
[CS1]
NodeID=2
[Processes]
Sender=BUSCS1_Sender
Receiver=BUSCS1_Receiver
Driver=BUSCS1_Driver
Trigger=CrmDriver
Trigg_Msg=I/O_CRM
MyTrigg_Msg=I/O_BUSCS1
```

Set the node address of the BUSCS1_UNIT between 1 and 253.

Set the refresh interval between 1 and 9,999 ms.

BUSCS1_UNIT status area setting. Two words will be allocated for the status area. Setting ranges are as follows: DM: 0 to 65534, CIO: 0 to 8190, SRAM: 0 to 65212

Set the node address of the CPU Bus Unit on the PLC between 1 and 253.

18-6-2 CS1 Bus Board Network Provider Mappings

/etc/FgwQnx/FgwQnxBUSCS1Map.ini contains settings for the CS1 Bus Board network provider.

```
;=========================================================
; (c) Copyright OMRON Corporation 2000-2003
;     All Rights Reserved
;=========================================================
; FgwQnxBUSCS1Map.ini - ini file for CS1 BUS I/F Borad Mapping
;
[MapNum]
Maps=2
[Map]
;1,CIO,3800,CIO,3800,100,1
;1,CIO,4800,CIO,4800,100,0
[BUSCS1]
Reverse=0
MyLine=1
AR=0x17080
TF=0x17c00
CF=0x17e00
CIO=0x18000
HR=0x1b000
TN=0x1b400
WR=0x1bc00
TIM=0x1c000
CNT=0x1e000
DM=0x20000
EM0=0x30000
EM1=0x40000
EM2=0x50000
EM3=0x60000
EM4=0x70000
EM5=0x80000
EM6=0x90000
EM7=0xa0000
EM8=0xb0000
EM9=0xc0000
EMA=0xd0000
EMB=0xe0000
EMC=0xf0000
```

18-7 DRM_UNIT Settings

18-7-1 DeviceNet Settings

/etc/FgwQnx/FgwQnxDrmPCI.ini contains settings for the DeviceNet network provider.

```
;=====================================================
; (c) Copyright OMRON Corporation 1999-2003
;    All Rights Reserved
;=====================================================
; FgwQnxDrmPCI.ini - ini file for DRM
;
[DRM0]
DriverImage=/usr/FgwQnx/bin/DRMdrv
ScanListPath=/etc/FgwQnx/scanlist.ini
NodeID=63
Baudrate=0
ScanCycleTime=0

StartScanMode=1

RefreshMethod=0

EventCycleTime=10
ONCWdtCheck=0
ComErrorStop=0
ComErrorData=0

;****    Master Function    ****
MasterFunction=1
ScanMode=0
InAreaName1=CIO
InAreaOffset1=2000
InAreaSize1=64
InAreaName2=DM
InAreaOffset2=0
InAreaSize2=0

OutAreaName1=CIO
OutAreaOffset1=1900
OutAreaSize1=64

OutAreaName2=DM
OutAreaOffset2=0
OutAreaSize2=0
```

Set the MAC ID of the local node.

Set the DeviceNet baud rate.
0: 125 kbps, 1: 250 kbps, 2: 500 kbps

Set the time to scan all nodes on the DeviceNet network. If 0 is set, the cycle time will be made as short as possible. The time can be set between 1 and 500 (ms).
The actual scan cycle times (current time, maximum time and minimum) can be read from the status area.

Set the DeviceNet mode to use at startup.
0: Don't scan, 1: Scan

Set the refresh interval for event memory data. The interval should be set the current value of the communications cycle time or longer.

Set handling of the scan when a DeviceNet communications error occurs.
0: Continue the scan for all nodes without errors

Set the event memory area in which words are to be allocated as input area 1 (inputs from DeviceNet to the event memory).

Set the word in the event memory area to use as the first word of input area 1.

Set the number of words to be allocated as input area 1 between 0 and 6,400.

Set event memory area, first word, and number of words for input area 2 in the same way as for input area 1.

Set event memory area, first word, and number of words for output area 1 (outputs from event memory to Device Net) in the same way as for input area 1.

Set event memory area, first word, and number of words for output area 2 (outputs from event memory to Device Net) in the same way as for input area 1.

```
;****    Slave Function    ****
SlaveFunction=0
SlaveScanMode=0
SlaveInAreaName=CIO
SlaveInAreaOffset=0
SlaveInAreaSize=0
SlaveOutAreaName=CIO
SlaveOutAreaOffset=0
SlaveOutAreaSize=0
StatusAreaName=CIO
StatusAreaOffset=1500
StatusAreaSize=90
;****    Process Name    ****
Sender=Drm0Sender
Receiver=Drm0Receiver
Driver=Drm0Driver
;****    My Refresh    ****
MyTrigger_Msg=I/O
MyTrigger_Msg2=Trigger_I/O
;****    Trigger for Refresh finished    ****
TriggerMethod=0
TriggerType=0
Trigger=TriggerProcess
Trigger_Msg=I/O_Trigger
[DRM1]
DriverImage=/usr/FgwQnx/bin/DRMdrv
ScanListPath=/etc/FgwQnx/scanlist.ini
NodeID=63
Baudrate=0
ScanCycleTime=0
StartScanMode=1
RefreshMethod=0
EventCycleTime=10
ONCWdtCheck=0
ComErrorStop=0
ComErrorData=0
;****    Master Function    ****
MasterFunction=1
ScanMode=0
InAreaName1=CIO
InAreaOffset1=3000
InAreaSize1=64
InAreaName2=DM
InAreaOffset2=0
InAreaSize2=0
OutAreaName1=CIO
OutAreaOffset1=2900
OutAreaSize1=64
OutAreaName2=DM
OutAreaOffset2=0
OutAreaSize2=0
```

Set the event memory area in which words are to be allocated as the DeviceNet status area.

Set the word in the event memory area to use as the first word of the DeviceNet status area.

Set 90 as the number of words to be allocated as the DeviceNet status area. This setting must always be 90 words. Refer to the following pages for details on the status area contents.

```
;****    Slave Function    ****
SlaveFunction=0
SlaveScanMode=0
SlaveInAreaName=CIO
SlaveInAreaOffset=0
SlaveInAreaSize=0
SlaveOutAreaName=CIO
SlaveOutAreaOffset=0
SlaveOutAreaSize=0
StatusAreaName=CIO
StatusAreaOffset=2500
StatusAreaSize=90
;****    Process Name    ****
Sender=Drm1Sender
Receiver=Drm1Receiver
Driver=Drm1Driver
;****    My Refresh   ****
MyTrigger_Msg=I/O
MyTrigger_Msg2=Trigger_I/O
;****    Trigger for Refresh finished    ****
TriggerMethod=0
TriggerType=0
Trigger=TriggerProcess
Trigger_Msg=I/O_Trigger
```

18-7-2 DeviceNet Scan List

/etc/FgwQnx/scanlist.ini contains the scan list settings for allocations to DeviceNet slaves. On the DeviceNet network, the MAC ID is used as the FINS node address. FINS node address 0 is for the local node and cannot be used unless FINS is not used and only event memory is being allocated.

The input area, first input word, input size, output area, first output word, and output size must be set for each DeviceNet MAC ID.

The scan list contains the input and output areas, first words, and sizes for each MAC ID on the DeviceNet network in the format given below. Any line beginning with “#” will be ignored.

Example: 01,1,00,00,1,00,02

Enter the following settings on each line, separating each setting with a comma (do not omit zeros except for in I/O area numbers): MAC ID, input area number, input offset, input size, output area number, output offset, and output area size.

Item	Setting
MAC ID	Set the MAC ID of the slave between 00 and 63. The MAC ID will be used as the FINS node address.
Input area number	Set the number specified in the number specified in /etc/FgwQnx/FgwQnxDrmPCI.ini.
Input area offset	Set the number of bytes. The start of the area will be offset by the set number of bytes from the beginning of the input area starting position specified in /etc/FgwQnx/FgwQnxDrmPCI.ini.
Input size	Set the number of bytes between 0 and 6400.
Output area number	Set the number specified in the number specified in /etc/FgwQnx/FgwQnxDrmPCI.ini.

Item	Setting
Output area offset	Set the number of bytes. The start of the area will be offset by the set number of bytes from the beginning of the output area starting position specified in /etc/FgwQnx/FgwQnxDrmPCI.ini.
Output size	Set the number of bytes between 00 and 6400.

Note

1. Use even numbers for offset address except for 8-bit Slaves.
2. When using MULTIPLE I/O TERMINALs, two words are allocated for the Communications Unit to send I/O Unit interface status information to the Master. Include this setting in the scan list.
3. When only explicit messages are used, set the input and output area sizes to 0.

```
;=====================================================
; (c) Copyright OMRON Corporation 1999-2003
;    All Rights Reserved
;=====================================================
; scanlist.ini - ini file for DRM-SCANLIST
;
; MacID,InAreaNo,InOffset,InSize(Byte),OutAreaNo,OutOffset,OutSize(Byte)
; ex) FgwQnxDrm.ini is default settting
; 10,01,20,02,01,00,00 means "DRT1-ID16(MacID=10) -> CIO2010"
; 11,01,00,00,01,10,02 means "DRT1-OD16(MacID=11) <- CIO1905"
; 12,01,00,00,01,00,00 means "Explicit message only(MacID=12)"
; DRT01-ID16(IN:1CH/OUT:0CH)
[DRM0]
01,01,00,02,01,00,00
;10,01,200,02,01,00,00
;11,01,00,00,01,200,02
;62,01,00,00,01,00,00
[DRM1]
```

Note The above settings are not present when the ONC is shipped.

18-8 HLK_UNIT Setup File

18-8-1 Host Link Settings

/etc/FgwQnx/FgwQnxHlk.ini contains settings for Host Link (SYSWAY, SYSWAY CV, and CompoWay/F). The node address, communications, and other settings are made.

```
;=====================================================
; (c) Copyright OMRON Corporation 2000-2003
;     All Rights Reserved
;=====================================================
; FgwQnxHlk.ini - ini file for HLK
;
[DATAPATH]
SYSWAY=/etc/FgwQnx/swaycnvt.dat
ID=/etc/FgwQnx/idcnvt.dat
TP700=/etc/FgwQnx/tp700.dat
TP710=/etc/FgwQnx/tp710.dat

[HLK0]
NodeID=127
ComSet=9600,7,2,E
NetTblPath=/etc/FgwQnx/HlkNetTbl.ini
TimeOut=5000
RetryCnt=0
NonBlock=0
TP_mode=0
ImagePath=/usr/FgwQnx/bin/hlkdrv

[HLK1]
NodeID=127
ComSet=9600,7,2,E
NetTblPath=/etc/FgwQnx/HlkNetTbl.ini
TimeOut=5000
RetryCnt=0
NonBlock=0
TP_mode=0
ImagePath=/usr/FgwQnx/bin/hlkdrv

[HLK2]
NodeID=127
ComSet=9600,7,2,E
NetTblPath=/etc/FgwQnx/HlkNetTbl.ini
TimeOut=5000
RetryCnt=0
NonBlock=0
TP_mode=0
ImagePath=/usr/FgwQnx/bin/hlkdrv

[HLK3]
NodeID=127
ComSet=9600,7,2,E
NetTblPath=/etc/FgwQnx/HlkNetTbl.ini
TimeOut=5000
RetryCnt=0
NonBlock=0
TP_mode=0
ImagePath=/usr/FgwQnx/bin/hlkdrv
```

Set the node address of the HLK□ network provider between 1 and 253.

Set the RS-232C communications settings.
Baud rate: 300, 600, 1200, 1800, 2400, 4800, 9600, 19200, 38400, 57600, or 115200
Data length: 5, 6, 7, or 8
Stop bits: 1 or 2
Parity: N (node), E (even), or O (odd)

Set the number of retries.

Set the Host Link response timeout time in milliseconds.

18-8-2 Host Link Network Table Settings

/etc/FgwQnx/HlkNetTbl.ini is the setup fie for Host Link nodes (SYSWAY, SYSWAY CV, and CompoWay/F). The unit address, protocol, and model are set for each node.

Do not combine CompoWay/F devices with SYSWAY or SYSWAY CV devices. SYSWAY and SYSWAY CV devices can be combined.

```
;=====================================================
; (c) Copyright OMRON Corporation 2000-2002
;     All Rights Reserved
;=====================================================
; HlkNetTbl.ini - ini file for HLK-NET_TABLE
;
[HLK0]
1,0,SYSWAY,C200H
2,0,SYSWAY,C200HS
3,0,SYSWAY,C200HG
4,0,SYSWAY,C200HX
5,0,SYSWAY,C200HX-CPU65-Z
6,0,SYSWAY,C200HX-CPU85-Z
7,0,SYSWAY,C200HE
8,0,SYSWAY,CQM1
9,0,SYSWAY,CPM1/CPM1A
10,0,SYSWAY,SRM1
11,0,SYSWAY,CV500
12,0,SYSWAY,CVM1-CPU01
13,0,SYSWAY,CVM1-CPU11
14,0,SYSWAY,CVM1-CPU21
15,0,SYSWAY,CV1000/CV2000
16,0,SYSWAY,C20
17,0,SYSWAY,C20H/C28H/C40H/C60H
18,0,SYSWAY,C20/28/40/60P
19,0,SYSWAY,C20/28/40/60PF
20,0,SYSWAY,C50
21,0,SYSWAY,C120/C120F
22,0,SYSWAY,C500
23,0,SYSWAY,C500F
24,0,SYSWAY,C1000H
25,0,SYSWAY,C1000HF
26,0,SYSWAY,C2000H
27,0,SYSWAY,CS1-CPU67
28,0,SYSWAY,CS1-CPU66
29,0,SYSWAY,CS1-CPU65/45
30,0,SYSWAY,CS1-CPU64/44
31,0,SYSWAY,CS1-CPU63/43/42

[HLK1]
1,1,Compoway,Other
2,2,Compoway,Other
3,3,Compoway,Other
;4,1,ID,V600/V620

[HLK2]
;1,2,TP700,TP700-B1
;2,1,TP710,TP710-A

[HLK3]
```

Set the FINS node address, unit address, protocol, and model in order and delimited with commas. The setting ranges are as follows:
FINS node address: 1 to 253
Unit address: 0 to 255
Protocol: SYSWAY, SYSWAY-CV, CompoWay/F, ID, TP700, or TP710

18-9 PT Connections Service Setup File

18-9-1 PT Connection Settings

/etc/FgwQnx/FgwQnxRut.ini contains settings for the PT connection services.

```
;=========================================================
; (c) Copyright OMRON Corporation 1999-2002
;     All Rights Reserved
;=========================================================
; FgwQnxRut.ini - ini file for FinsGatewayQNX
;
[RUT0]
Enable=1
ImagePath=/usr/FgwQnx/bin/rutdrv
NodeID=1
CommParam=9600,7,2,E
NetAddr=2.1.24
#Mode=NORMAL
Mode=DELIMITER
DelimiterLength=1
#DelimiterCode=41
DelimiterCode=0D

[RUT1]
Enable=1
ImagePath=/usr/FgwQnx/bin/rutdrv
NodeID=1
CommParam=9600,7,2,E
NetAddr=3.1.25
#Mode=NORMAL
Mode=DELIMITER
DelimiterLength=1
#DelimiterCode=41
DelimiterCode=0D

[RUT2]
Enable=1
ImagePath=/usr/FgwQnx/bin/rutdrv
NodeID=1
CommParam=9600,7,2,E
NetAddr=4.1.26
#Mode=NORMAL
Mode=DELIMITER
DelimiterLength=1
#DelimiterCode=41
DelimiterCode=0D
```

Set communications when a PT is connected to COM1.

Set the unit address here when the unit address has been changed for Hsv0 in /etc/FgwQnx/FgwQnx.ini.

Set the FINS network address for COM1. (This is the address set in FrwQnx.ini.)

Set communications when a PT is connected to COM2.

Set the unit address here when the unit address has been changed for Hsv1 in /etc/FgwQnx/FgwQnx.ini.

Set the FINS network address for COM2. (This is the address set in FgwQnx.ini.)

Set communications when a PT is connected to COM3.

Set the unit address here when the unit address has been changed for Hsv2 in /etc/FgwQnx/FgwQnx.ini.

Set the FINS network address for COM3. (This is the address set in FgwQnx.ini.)

18-9-2 /etc/FgwQnx/FgwQnxHsv.ini Settings

Set the model codes to be returned to the PT from the Open Network Controller. Normally, this setting will not need to be changed, but if an existing program is to be used, the model code may need to be changed. Refer to the model codes listed below.

```
;=====================================================
; (c) Copyright OMRON Corporation 1999-2002
;     All Rights Reserved
;=====================================================
; FgwQnxHsv.ini. For Host-Link.
;

[Hsv0Unit]
MachineType = 0x12   <-- Model code for COM1.
Name  = Hsv0

[Hsv1Unit]
MachineType = 0x12   <-- Model code for COM2.
Name  = Hsv1

[Hsv2Unit]
MachineType = 0x12   <-- Model code for COM3.
Name  = Hsv2
```

Model	Model code
C250	0x01
C500	0x02
C120/C50	0x03
C250F	0x09
C500F	0x0A
C120F	0x0B
C2000	0x0E
C1000H	0x10
C2000H/CQM1/CPM1	0x11
C20H/C28H/C40H/C200H/C200HS	0x12 (default)
C1000HF	0x13
CV500	0x20
CV1000	0x21
CV2000	0x22
CS1/CJ1	0x30
CVM1-CPU01	0x40
CVM1-CPU11	0x41
CVM1-CPU21	0x42

18-10 RemoteCOM Setup File: /etc/FgwQnxRCOM.ini

```
;=====================================================
; (c) Copyright OMRON Corporation 2002-2003
;     All Rights Reserved
;=====================================================
; FgwQnxRCOM.ini - ini file for RCOM
;
[DATAPATH]
SYSWAY=/etc/FgwQnx/swaycnvt.dat
ID=/etc/FgwQnx/idcnvt.dat
TP700=/etc/FgwQnx/tp700.dat
TP710=/etc/FgwQnx/tp710.dat
[RCOM0]
NodeID=127
ComSet=9600,7,2,E
NetTblPath=/etc/FgwQnx/RCOMNetTbl.ini
TimeOut=5000
RetryCnt=0
NonBlock=0
TP_mode=0
ImagePath=/usr/FgwQnx/bin/RCOMdrv
IpAddress=192.168.200.254
Port=257
[RCOM1]
NodeID=127
ComSet=9600,7,2,E
NetTblPath=/etc/FgwQnx/RCOMNetTbl.ini
TimeOut=5000
RetryCnt=0
NonBlock=0
TP_mode=0
ImagePath=/usr/FgwQnx/bin/RCOMdrv
IpAddress=192.168.200.254
Port=257
[RCOM2]
NodeID=127
ComSet=9600,7,2,E
NetTblPath=/etc/FgwQnx/RCOMNetTbl.ini
TimeOut=5000
RetryCnt=0
NonBlock=0
TP_mode=0
ImagePath=/usr/FgwQnx/bin/RCOMdrv
IpAddress=192.168.200.254
Port=257
[RCOM3]
NodeID=127
ComSet=9600,7,2,E
NetTblPath=/etc/FgwQnx/RCOMNetTbl.ini
```

Set the node address of the RCOM□ network provider between 1 and 253.

Set the RS-232C communications settings.
Baud rate: 300, 600, 1200, 1800, 2400, 4800, 9600, 19200, 38400, 57600, or 115200
Data length: 5, 6, 7, or 8
Stop bits: 1 or 2
Parity: N (node), E (even), or O (odd)

Set the number of retries.

Set the Host Link response timeout time in milliseconds.

```
TimeOut=3000
RetryCnt=0
NonBlock=0
TP_mode=0
ImagePath=/usr/FgwQnx/bin/RCOMdrv
IpAddress=192.168.200.254
Port=257
[RCOM4]
NodeID=127
ComSet=9600,7,2,E
NetTblPath=/etc/FgwQnx/RCOMNetTbl.ini
TimeOut=5000
RetryCnt=0
NonBlock=0
TP_mode=0
ImagePath=/usr/FgwQnx/bin/RCOMdrv
IpAddress=192.168.200.254
Port=257
[RCOM5]
NodeID=127
ComSet=9600,7,2,E
NetTblPath=/etc/FgwQnx/RCOMNetTbl.ini
TimeOut=5000
RetryCnt=0
NonBlock=0
TP_mode=0
ImagePath=/usr/FgwQnx/bin/RCOMdrv
IpAddress=192.168.200.254
Port=257
[RCOM6]
NodeID=127
ComSet=9600,7,2,E
NetTblPath=/etc/FgwQnx/RCOMNetTbl.ini
TimeOut=5000
RetryCnt=0
NonBlock=0
TP_mode=0
ImagePath=/usr/FgwQnx/bin/RCOMdrv
IpAddress=192.168.200.254
Port=257
[RCOM7]
NodeID=127
ComSet=9600,7,2,E
NetTblPath=/etc/FgwQnx/RCOMNetTbl.ini
TimeOut=5000
RetryCnt=0
NonBlock=0
TP_mode=0
ImagePath=/usr/FgwQnx/bin/RCOMdrv
IpAddress=192.168.200.254
Port=257
```

```
[RCOM8]
NodeID=127
ComSet=9600,7,2,E
NetTblPath=/etc/FgwQnx/RCOMNetTbl.ini
TimeOut=5000
RetryCnt=0
NonBlock=0
TP_mode=0
ImagePath=/usr/FgwQnx/bin/RCOMdrv
IpAddress=192.168.200.254
Port=257
[RCOM9]
NodeID=127
ComSet=9600,7,2,E
NetTblPath=/etc/FgwQnx/RCOMNetTbl.ini
TimeOut=5000
RetryCnt=0
NonBlock=0
TP_mode=0
ImagePath=/usr/FgwQnx/bin/RCOMdrv
IpAddress=192.168.200.254
Port=257
[RCOM10]
NodeID=127
ComSet=9600,7,2,E
NetTblPath=/etc/FgwQnx/RCOMNetTbl.ini
TimeOut=5000
RetryCnt=0
NonBlock=0
TP_mode=0
ImagePath=/usr/FgwQnx/bin/RCOMdrv
IpAddress=192.168.200.254
Port=257
[RCOM11]
NodeID=127
ComSet=9600,7,2,E
NetTblPath=/etc/FgwQnx/RCOMNetTbl.ini
TimeOut=5000
RetryCnt=0
NonBlock=0
TP_mode=0
ImagePath=/usr/FgwQnx/bin/RCOMdrv
IpAddress=192.168.200.254
Port=257
[RCOM12]
NodeID=127
ComSet=9600,7,2,E
NetTblPath=/etc/FgwQnx/RCOMNetTbl.ini
TimeOut=5000
RetryCnt=0
NonBlock=0
TP_mode=0
ImagePath=/usr/FgwQnx/bin/RCOMdrv
IpAddress=192.168.200.254
Port=257
```

```
[RCOM13]
NodeID=127
ComSet=9600,7,2,E
NetTblPath=/etc/FgwQnx/RCOMNetTbl.ini
TimeOut=5000
RetryCnt=0
NonBlock=0
TP_mode=0
ImagePath=/usr/FgwQnx/bin/RCOMdrv
IpAddress=192.168.200.254
Port=257
[RCOM14]
NodeID=127
ComSet=9600,7,2,E
NetTblPath=/etc/FgwQnx/RCOMNetTbl.ini
TimeOut=5000
RetryCnt=0
NonBlock=0
TP_mode=0
ImagePath=/usr/FgwQnx/bin/RCOMdrv
IpAddress=192.168.200.254
Port=257
[RCOM15]
NodeID=127
ComSet=9600,7,2,E
NetTblPath=/etc/FgwQnx/RCOMNetTbl.ini
TimeOut=5000
RetryCnt=0
NonBlock=0
TP_mode=0
ImagePath=/usr/FgwQnx/bin/RCOMdrv
IpAddress=192.168.200.254
Port=257
```

18-11 FinsLink Setup File: /etc/FgwQnx/FgwQnxFlk0.ini

```
;=====================================================
; (c) Copyright OMRON Corporation 2000-2003
;     All Rights Reserved
;=====================================================
; FgwQnxFlk0.ini - ini file for FinsLink
;
;[Finslink]
;Timeout :[ms]
;Interval :[ms]
;FinsCheck :0 or 1
;
;[Parameters]
;1:OncType,
;2:OncOffset,
;3:FinsNet,
;4:FinsNode,
;5:FinsUnit,
;6:FinsType,
;7:FinsOffset,
;8:ElementSize(1:WORD,2:DWORD),
;9:Size,
;10:Direction(0:Read(Fins to Onc) 1:Write(Onc to Fins))
;
[Finslink]
Timeout=5000
Interval=5000
FinsCheck=1
StatusArea=CIO
StatusOffset=7000
; 1,   2,  3,  4, 5,  6,   7, 8,  9, 10
[Parameters]
```

Set the communications timeout time between 0 and 9,999 ms.

Set the FINS send interval between 1 and 3,600,000 ms.

Set the FinsLink status area. A total of 258 words are allocated for the status area. The offsets can be set in the following ranges: CIO = 0 to 7934, DM = 65278

Note The following four entries can be made in the Finslink parameters when using FinsLink Ver. 1.30.

ErrorMonitorFlag=ON

Error detection setting
ON (default): Errors detected
OFF: Errors not detected.

ErrorLevel=LOG_ERR

Error level setting
Setting range:
LOG_ERR (default): ERROR
LOG_WARNING: WARNING

SolicitCount=0

FINS commands will not be sent to a communications partner detected as being stopped during the interval calculated as the product of the interval set value and this set value.

WaitTime=0

Wait time until FinsLink starts (unit: s) set between 0 and 9999.

18-12 Diskspace Setup Files

18-12-1 File Settings for /etc/FgwQnx/diskspace.ini (Unit Ver. 1.1 or Later)

```
;=====================================================
; (c) Copyright OMRON Corporation 2003
;       All  Rights  Reserved
;=====================================================
; diskspace.ini - ini file for DiskSpace
;
[DiskFreeSpace]
DiskType=1
DiskCheck=OFF
SpaceSize=1024

SyslogCheck=OFF
SyslogPath=/tmp/syslog
SyslogSize=1048576

ProcessStop=OFF
ProcessStopCmd0=/usr/Tool/bin/breset –s
```

Select the disk for which the remaining space is to be monitored.
1: Internal disk
2: Memory Card
3: Internal disk and Memory Card

Set whether to monitor the remaining disk space.
OFF: Disabled
ON: Enabled

An error is detected if the remaining disk space being monitored drops below this set value (unit: bytes).

Set whether to monitor the /tmp/syslog size.
OFF: Disabled
ON: Enabled

When the syslog size exceeds this set value, the existing /tmp/syslog file is renamed /tmp/syslog.old, and a new syslog file is created (unit: bytes).

Set the remaining space in the disk where /tmp/syslog is to be saved to less than 50%.

For details on confirming the current remaining disk space, refer to *17-9 Time Data Check* in *SECTION 17 Web Service Version 2 Maintenance Menu*.

18-12-2 File Settings for /usr/Tool/bin/onc_command (Unit Ver. 1.1 or Later)

```
/usr/Tool/bin/diskspace 60 &
```

Set the execution cycle for checking the size of /tmp/syslog for the disk space check between 1 and 86,400 (unit: s)

SECTION 19
Troubleshooting

This section provides information for troubleshooting problems that might occur with the Open Network Controller.

19-1 Troubleshooting with FINS End Codes 350
19-2 Error Messages 358
19-2-1 Open Network Controller Startup Failures 358
19-2-2 Error Displays 358
19-2-3 Errors and Corrections 359
19-3 DeviceNet Indicator Displays 394
19-3-1 MS and NS Indicators 394
19-3-2 Seven-segment Display 395
19-4 Errors for RCOM_UNIT: Connection Process 398

19-1 Troubleshooting with FINS End Codes

End codes for FINS commands consist of two bytes that indicate the result of executing a command using a main response code and a sub response code.

With some commands, the destination node can make a request to yet another node called the “third node.”

The structure of the end codes is shown in the following diagram.

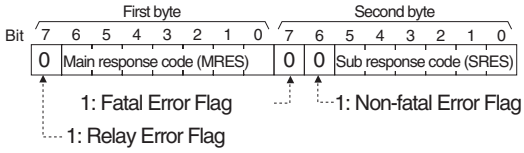

The main response code (MRES) in the first byte classifies the response and the sub-response code (SRES) in the second byte indicates details under the MRES classification.

If bit 7 of the first byte is ON, a network relay error has occurred. Refer to *8-2 Network Relay Errors* in the *FINS Commands Reference Manual* (W227) for details.

If bit 6 or 7 of the second byte is ON, an error has occurred in the PLC or computer returning the response. Refer to the operation manual for the device returning the response for details when troubleshooting the error.

Main response code	Sub response code	Check point	Probable cause	Remedy
00: Normal completion	00: Normal completion	---	---	---
	01: Service interrupted	---	Service was interrupted	Check the contents of the destination transmission area of third node.
		Data link status	Service was interrupted	Check the data link status.
01: Local node error	01: Local node not in network	Local node network participation	Local node not part of Network	Add to Network.
	02: Token timeout	Maximum address	Token not received	Set the local node's node number below the maximum node number.
	03: Retries exceeded	---	Number of transmit retries exceeded	Check communications with inter-node echo test. If the test fails, check network environment.
	04: Maximum frames exceeded	Number of send frames	Maximum number of send frames exceeded	Either check the execution of events in the network and reduce the number of events occurring in one cycle, or increase the maximum number of send frames.
	05: Node address setting error	Node address	Node address setting error (range)	Make sure the node number is within specified range and that there are no duplicate node numbers.
	06: Node address duplication	Node address	Node address duplication error	Make sure that there are no duplicate node numbers within the same network.

Main response code	Sub response code	Check point	Probable cause	Remedy
02: Destination node error	01: Destination not in network	INS indicator on destination Unit	Destination node not part of network	Add to network.
	02: No such Unit	Instruction controller data	No Unit with the specified unit address	Check the destination node's unit address.
	03: Third node not in network	Instruction controller data	Third node not part of network	Check the third node's address, and check the address of the third node in the send data for the CMND instruction.
		Command data	Broadcasting was specified.	Check the control data and specify only one node as the third node.
	04: Destination busy	---	High traffic at destination node	Increase the number of transmit retry attempts or re-evaluate the system so that the destination node is not so busy receiving data.
	05: Response timeout	---	Destination node does not exist	Check the settings.
			Message packet was corrupted by noise	Increase the number of transmit retry attempts. Perform an intern-ode text to check for noise
		Instruction controller data	Response watchdog timer interval too short	Increase the value for the response watch dog timer interval in the control data.
		Error log	Frame lost in transmission	Check the error log and correct the process.
03: Communications controller error	01: Communications controller error	Unit or Board indicators	Error occurred in the communications controller.	Take corrective action, referring to the operation manual for the Unit or Board.
	02: PLC CPU Unit error	CPU Unit indicators at destination node	CPU Unit error occurred in the PLC at the destination node.	Clear the error in the CPU (refer to the PLC's operation manuals)
	03: Controller error	Board indicators	A controller error has prevented a normal response from being returned.	Check network communications status and reset the controller board. If the error still exists, replace the controller board.
	04: Unit number setting error	Unit number	The node number setting is incorrect.	Make sure the node number is within specified range and that there are no duplicate node numbers.
04: Not executable	01: Undefined command	Command code	The specified command code is not supported by the Unit or Board.	Check the command code and be sure that the Unit/Board supports it.
	02: Unsupported model or version	Unit model and version	Cannot process command because the specified Unit model or version is incorrect.	Check the unit model and version.

Main response code	Sub response code	Check point	Probable cause	Remedy
05: Routing error	01: Destination node number setting error	Routing tables	Destination node number is not set in the routing table.	Set the destination node number in the routing table.
	02: No routing table	Routing tables	Routing table isn't registered so destination cannot be found.	Set the source nodes, destination nodes, and relay nodes in the routing table.
	03: Routing table error	Routing tables	Routing table error	Set the routing table correctly.
	04: Too many relays	Network configuration	The maximum number of relay nodes (2) was exceeded in the command.	Redesign the network or reconsider the routing table to reduce the number of relay nodes in the command.
10: Command format error	01: Long command	Command data	The command is longer than the max. permissible length.	Check the command format of the command and set it correctly.
	02: Short command	Command data	The command is shorter than min. permissible length.	Check the command format of the command and set it correctly.
	03: Elements-data mismatch	Command data	The designated number of data items differs from the actual number.	Check the number of items and the data, and make sure that they agree.
	04: Command format error	Command data	An incorrect command format has been used.	Check the command format of the command and set it correctly.
	05: Header error	Routing tables	The local node's relay table or relay node's local network table is incorrect.	Set the routing tables correctly.

Main response code	Sub response code	Check point	Probable cause	Remedy
11: Parameter error	01: No such area	Area code in command data	A correct memory area code has not been used or Expansion Data Memory is not available.	Check the command's memory area code and set the appropriate code.
	02: Access size error	Access size specified in command data	The access size specified in the command is incorrect, or the first address is an odd number.	Set the correct access size for the command.
	03: Address range error	Starting address specified in command data	The first address is in an inaccessible area.	Set a first address that is in an accessible area.
	04: Address range exceeded	Starting address and number of elements specified in command data	The end of specified word range exceeds the acceptable range.	Check the acceptable limits of the data area and set the word range within the limits.
		Data link tables	The total number of words exceeds the limit.	Check the data link tables and correct them.
		Outside time compensation range	Exceeds permissible range of time compensation.	Set a time within the permissible range of time compensation.
	06: No such program	Program number in command data	A non-existent program number has been specified.	Check the program number and be sure that it is set correctly.
	09: Correlation error	Command data	The sizes of data items in the command block are incorrect.	Check the command data and be sure that the sizes of the data items are correct.
		Data link tables	There are nodes in the refresh parameters that are not included in the common link parameters.	Check the data link tables and correct them.
	0A: Data duplication	IOM break application in CPU Unit	The IOM break function cannot be executed because it is already being executed.	Either abort the current IOM break function processing, or wait until it is completed and execute the command.
		Data link tables	The same node address is set more than once.	Check the data link tables for duplicate node addresses.
	0B: Response too long	Number of elements in command data	The response block is longer than the maximum permissible length.	Check the command format and set the number of items correctly.
	0C: Parameter error	Parameters in command data	An incorrect parameter code has been specified.	Check the command data and reenter it correctly.
		Data link table file	There is an error in the file.	Check the contents of the data link table file.

Main response code	Sub response code	Check point	Probable cause	Remedy
20: Read not possible	02: Protected	---	The data is protected.	Execute the instruction again after issuing the PROGRAM AREA PROTECT CLEAR command.
		File name	An attempt was made to download a file that is being uploaded.	Check the file name and either interrupt servicing or wait for servicing to complete before re-executing the command.
	03: No table	Relevant table	The registered table does not exist or is incorrect.	Set the table.
		Number of files open	Too many files open.	Close open files and re-execute the command.
	04: No such data	---	The corresponding search data does not exist.	---
	05: No such program	Program number in command data	A non-existing program number has been specified.	Check the program number and be sure that it is set correctly.
	06: No such file	File name and file device	A non-existing file has been specified.	Check whether the correct file name was used.
	07: Verification error	Contents of memory	A verification error has occurred.	Check whether the memory contents are correct and replace if incorrect.
		---	Failed to read file.	Check the contents of the file.
21: Write not possible	01: Read-only	---	The specified area is read-only and cannot be accessed.	If the specified area is read-only, the write cannot be performed. If it is write-protected, turn OFF the write-protect switch and execute the instruction again.
	02: Protected/Data link table not writable	---	The program area is protected.	Execute the instruction again after issuing the PROGRAM AREA PROTECT CLEAR command.
		File name	An attempt was made to simultaneously download and upload a file.	Check the file name and either interrupt servicing or wait for servicing to complete before re-executing the command.
		System settings	The data link tables cannot be written manual because they are set for automatic generation.	Change the system settings to manual data link table generation.
	03: Cannot be registered	Number of files in file device	The number of files exceeds the maximum permissible.	Write the file(s) again after erasing unneeded files, or use different file memory.
		Number of open files	Too many files open.	Close open files and re-execute the command.
	05: No such program	Program number in command data	A non-existing program number has been specified.	Check the program number and be sure that it is set correctly.
	06: No such file	File name	A non-existent file has been specified.	Check the file name and re-execute the command.
	07: File name already exists	File name	The specified file already exists.	Change the name of the file and execute the instruction again.
	08: Change not possible	Contents of memory being changed	The data cannot be changed because doing so would create an error.	---

Main response code	Sub response code	Check point	Probable cause	Remedy
22: Not executable in current mode	01: Already operating/started; operation not possible	---	The operating mode is incorrect.	Check the operating mode.
		Data link status	Data links are active, making execution impossible.	Check the data link status before execution.
	02: Stopped	---	The operating mode is incorrect.	Check the operating mode.
		Data link status	Data links are active, making execution impossible.	Check the data link status before execution.
	03: Wrong PLC mode	---	The Unit is in the PROGRAM mode.	Check the PLC's or Open Network Connector's mode.
	04: Wrong PLC mode	---	The Unit is in the DEBUG mode.	Check the PLC's or Open Network Connector's mode.
	05: Wrong PLC mode	---	The Unit is in the MONITOR mode.	Check the PLC's or Open Network Connector's mode.
	06: Wrong PLC mode	---	The Unit is in the RUN mode.	Check the PLC's or Open Network Connector's mode.
	07: Node not polling node	---	The specified node is not the polling node.	Check which node is the polling node.
	08: Step not executable	---	The mode is incorrect and the step cannot be executed.	Check whether the step is active.
23: No Unit	01: No such file device	Unit configuration being processed	A file device does not exist where specified.	Mount the memory or media.
	02: No such memory	---	The specified memory does not exist.	Check the specifications of the installed file memory.
	03: No clock	---	No clock exists.	Check the model number.
	05: Ethernet setting error	P-FINS address conversion settings	The IP address is not set for the specified destination node.	Execute SETUP and add the setting.
24: Start/stop not possible	01: No table registered	Data link tables	The data link table either hasn't been created or is incorrect.	Set the data link tables correctly.

Main response code	Sub response code	Check point	Probable cause	Remedy
25: Unit error	02: Parity/check-sum error	Contents of memory being processed	There is an error in memory.	Transfer correct data into memory.
	03: I/O setting error	I/O Unit configuration	I/O setting error (The registered I/O configuration differs from the actual configuration.)	Either change the actual configuration to match the registered one, or generate the I/O tables again.
	04: Too many I/O points	Number of I/O points in registered I/O tables	Too many I/O points or remote I/O points	Redesign the system to remain within permissible limits.
	05: CPU bus error	CPU bus line	An error occurred during data transfer between the CPU and a CPU Bus Unit.	Check the Unit, Boards, and cable connections and issue the ERROR CLEAR command.
	06: I/O duplication error	Rack numbers, unit numbers, and I/O addresses set in system settings	A rack number, unit number, or I/O word allocation has been duplicated.	Check the system's settings and eliminate any duplication.
	07: I/O bus error	I/O bus line	An error occurred during data transfer between the CPU and an I/O Unit.	Check the Unit, Boards, and cable connections and issue the ERROR CLEAR command.
	09: SYSMAC BUS/2 error	SYSMAC BUS/2 transmission path	An error occurred during SYSMAC BUS/2 data transfer.	Check the Unit, Boards, and cable connections and issue the ERROR CLEAR command.
	0A: Special I/O Unit/CPU Bus Unit error	Special I/O Unit/CPU Bus Unit transmission path	An error occurred during CPU Bus Unit data transfer.	Check the Unit, Boards, and cable connections and issue the ERROR CLEAR command.
	0D: SYSMAC BUS number duplicated	Word settings	Duplication in SYSMAC BUS word allocation.	Check and regenerate the I/O tables.
	0F: Memory error	Status of memory being processed	A memory error has occurred in internal memory, in the Memory Card, or in Expansion DM during the error check.	If the error occurred in internal memory or the Expansion DM Unit, correct the data in the command and execute it again. If the error occurred in a Memory Card or Expansion DM Unit used for file memory, the file data has been corrupted. Execute the Memory Card FORMAT command. If the above remedies do not eliminate the error, replace the faulty memory.
	10: No SYSMAC BUS terminator	---	Terminator not connected in SYSMAC BUS System.	Connect the terminator correctly.

Main response code	Sub response code	Check point	Probable cause	Remedy
26: Command error	01: No protected	Command protection in program area	The specified area is not protected. This response code will be returned if an attempt is made to clear protection on an area that is not protected.	The program area is not protected, so it isn't necessary to clear protection.
	02: Wrong password	---	An incorrect password has been specified.	Specify the password that is registered.
	04: Protected	---	The specified area is protected.	Execute the command again after the PROGRAM AREA PROTECT CLEAR command.
		Number of commands being executed	Too many commands at destination (more than 5).	Either interrupt servicing or wait for servicing to complete before re-executing the command.
	05: Service executing	---	The service is being executed.	Execute the command again after the service has been completed or aborted.
	06: Service stopped	---	The service is not being executed.	Execute the service if necessary.
	07: No execution right	LINK indicator on Unit or Board	Service cannot be executed from local node because the local node is not part of the data link.	Execute the service from a node that is part of the data link.
		---	A buffer error has prevented returning a normal response.	Reset the Board. If the error persists, replace the Board.
	08: Environment not set	Settings before execution	Service cannot be executed because necessary settings haven't been made.	Make the necessary settings.
	09: Required item not set	Command data	Service cannot be executed because necessary settings haven't been made.	Make the necessary settings.
	0A: Number already defined	Program action and transmission numbers stored in the program area	The specified action or transition number has already been registered.	Execute the command again using an action or transition number that hasn't been registered.
	0B: Error cannot be cleared	Cause of the error that cannot be cleared	Cannot clear error because the cause of the error still exists.	Eliminate the cause of the error and execute the ERROR CLEAR command.
30: Access right error	01: No access right	---	The access right is held by another device. (SFC online editing is being performed from another node or another node has executed ACCESS RIGHT ACQUIRE or ACCESS RIGHT FORCED ACQUIRE.)	Execute the command again after the access right has been released. (The command can be executed after the ACCESS RIGHT FORCED ACQUIRE or ACCESS RIGHT RELEASE command is completed. Releasing the access right might affect processes in progress at the node that held the access right.)
40: Abort	01: Service aborted	---	Command was aborted with ABORT command.	---

19-2 Error Messages

This section describes the error codes and messages that appear on the 7-segment display or in the syslog file. The error codes are also called “error IDs.”

19-2-1 Open Network Controller Startup Failures

If, after turning ON the power, the beeper sounds several times, the ERR indicator lights, and one of the following error IDs appear on the 7-segment display, an error has occurred in Open Network Controller startup. If this occurs, contact your OMRON representative.

16, 20, 28, 2C, 34, 38, 58, 94, C0

Note The error IDs will not be scrolled on the 7-segment display when any of the above IDs has been displayed.

19-2-2 Error Displays

Errors that occur on the Open Network Controller can be checked on the 7-segment display or in the syslog file. An error ID will be displayed on the 7-segment display and details will be recorded in the syslog file when an error occurs.

Errors are classified as both “errors” and “warnings.” The differences in the way errors are indicated on the 7-segment display and the syslog file are described next.

Note DIP switch pins 2-2 and 2-3 must be turned OFF to display errors on the 7-segment display.

Seven-segment Display

Errors classified as warnings are not displayed on the 7-segment display. Up to 20 errors are recorded in memory for the 7-segment display.

The 7-segment display will scroll through the current error IDs, displaying the first two letters of the network provider name followed by the error ID, as shown below. The error ID is displayed 2 digits at a time.

CL → 00 → 08 → DR → 00 → 52 → HL → 00 → 13

CP	CPU_UNIT
SP	SPR_UNIT
ET	ETN_UNIT
CL	CLK_UNIT
SL	SYSMAC_LINK
DR	DRM_UNIT
HL	HLK_UNIT
RU	RUT_UNIT
BU	BUSCS1_UNIT
RC	RCOM_UNIT
FL	FLK_UNIT
CD	CARD
PR	Other process

syslog File

Both errors and warnings are recorded in the syslog file as long as there is sufficient capacity on the internal flash disk. The complete file name is /tmp/syslog.

When power to the Open Network Controller is turned ON, the previous syslog file is renamed to /tmp/syslog.old and the syslog file is cleared.

An example of the contents of the syslog are shown below. Each line lists the time, a standard message, network provider name (after “FGW-”), the error ID (after “ID=”), and then the error message.

Jul 27 10:54:50 node<<1>> syslog: FGW-HLK0: ID=0024| [HLK0] warning: receive timeout
Jul 27 10:54:50 node<<1>> syslog: FGW-HLK0: ID=0063| [HLK0] warning: Retry count over
Jul 27 10:54:57 node<<1>> syslog: FGW-DRM: ID=0091| Error/Communications_Error[0x0020].

19-2-3 Errors and Corrections

The following tables list the error IDs that appear for each network provider, along with the steps required to correct the error.

Errors caused by incorrect settings are usually corrected by checking or changing the settings using the Setting Tool. For errors in those parameters not handled by the Setting Tool, refer to the file, section, and entry names listed in the Correction sections of the table and check or change the file settings directly.

To check or correct settings directly, use the Web Service Ver. 2 Display/Edit Settings Files menu. (Refer to *17-2 Displaying and Editing Setup Files*.)

Note Contact your OMRON representative if any error IDs appear that are not listed in the following tables.

CPU_Unit (FGW-CPU)

ID	Level	syslog message	
0005	ERROR	**Fins_new failed**	
		Meaning	The network provider could not be registered.
		Cause	Unit address is already in use.
		Correction	Check that the CPU_UNIT entry under Unit ID in the /etc/FgwQnx/FgwQnx.ini file is set and that the address is not being used by another unit.

ETN_Unit (FGW-ETN)

ID	Level	syslog message	
0004	ERROR	**Fins_new failed**	
		Meaning	The network provider could not be registered.
		Cause	The network number or unit address is already in use.
		Correction	Use the Setting Tool to check that the network number is used only once. Also, check that the unit address under the ETN entry under Unit ID in the /etc/FgwQnx/FgwQnx.ini file is not being used by another unit.
0006	ERROR	**bind error: errno** %d, %s	
		Meaning	The IP socket cannot be bound.
		Cause	Same as above.
		Correction	If the error occurs frequently even after restarting the Controller, replace the Controller.
0007	WARNING	**no IP Table entry on this system**	
		Meaning	The IP table cannot be accessed.
		Cause	The /etc/FgwQnx/FgwQnxEtn.ini file does not exist or the IP table is not set.
		Correction	Check /etc/FgwQnx/FgwQnxEtn.ini and set the IP table using the Setting Tool.
0008	WARNING	**sendto failed: errno** %d, %s	
		Meaning	A socket send failed.
		Cause	Same as above.
		Correction	Retry.
0009	WARNING	**recvfrom error: errno** %d, %s	
		Meaning	A socket receive failed.
		Cause	Same as above.
		Correction	Retry.

ID	Level	syslog message		
0010	WARNING	**couldn't find node** %d **on IpTable**		
			Meaning	The node specified by %d in the syslog message is not in the IP table.
			Cause	Same as above.
			Correction	Set the IP table correctly using the Setting Tool.

SPR _Unit (FGW-SPR)

ID	Level	syslog message		
0003	ERROR	**Profile Error. UnitID = [**%d**]**		
			Meaning	The SPR unit number setting (indicated by %d in the syslog message) is out of range.
			Cause	As above.
			Correction	Check that the SPR entry under Unit ID in the /etc/FgwQnx/FgwQnx.ini file is set between 16 and 31.
0007	ERROR	**Profile Error. RefreshTimer = [**%d**]**		
			Meaning	The refresh interval (indicated by %d in the syslog message) is set out of range.
			Cause	As above.
			Correction	Use the setting tool to set the refresh cycle to 1 or higher.
0008	ERROR	**Profile Error. SystemMemoryName.**		
			Meaning	The event memory name is not valid.
			Cause	As above.
			Correction	Use setting tool to set the area name mapped in the system status area to DM, CIO, or SRAM.
0009	ERROR	**Profile Error. SystemMemoryOffset = [**%d**]**		
			Meaning	The offset of the area name mapped in the system status area (indicated by %d in the syslog message) is not valid.
			Cause	As above.
			Correction	Use the setting tool to set the offset within a range suitable for the area name.
0010	ERROR	**Profile Error. StartType = [**%d**]**		
			Meaning	The execute/do not execute setting for startup restoration is not valid.
			Cause	As above.
			Correction	Use the setting tool to select startup restore again.
0011	ERROR	**Profile Error. RefreshInterval.**		
			Meaning	The refresh interval setting is not valid.
			Cause	As above.
			Correction	Use the setting tool to set the Refresh Interval correctly.
0012	ERROR	**Profile Error. RefreshOnline.**		
			Meaning	The Refresh Interval online setting is not valid.
			Cause	As above.
			Correction	Check to be sure the Refresh Online setting is set to 0 or 1 under ONCSys in the /etc/FgwQnx/FgwQnxONCSys.ini file.
0021	ERROR	**Profile Error. MapNum = [**%d**]**		
			Meaning	The Maps settings (MapNum) are not valid.
			Cause	As above.
			Correction	Use the setting tool to delete all list map settings and then reset them from the start.
0022	ERROR	**Profile Error. MapMyLine = [**%d]		
			Meaning	The list map execution flag number setting is not valid.
			Cause	As above.
			Correction	Check that the same value is set for MyLine as is set for RefreshLine, NonRefreshLine, and StartLine under SPR in the /etc/FgwQnx/FgwQnxONCSysMap.ini file.
0023	ERROR	**Profile Error. MapRefreshLine = [**%d**]**		
			Meaning	The Refresh Line setting is not valid.
			Cause	As above.
			Correction	Check to be sure the Refresh Line setting is set to 0 or higher (The default setting is 1) under ONCSys in the /etc/FgwQnx/FgwQnxONCSysMap.ini file.

ID	Level	syslog message	
0024	ERROR	**Profile Error. MapNonRefreshLine = [**%d**]**	
		Meaning	The Non Refresh Line setting is not valid.
		Cause	As above.
		Correction	Check to be sure the Non Refresh Line setting is set to 0 or higher (The default setting is 2) under ONCSys in the /etc/FgwQnx/FgwQnxONCSysMap.ini file.
0025	ERROR	**Profile Error. MapStartLine = [**%d**]**	
		Meaning	The Start Line setting is not valid.
		Cause	As above.
		Correction	Check to be sure the Start Line setting is set to 0 or higher (The default setting is 3) under ONC-Sys in the /etc/FgwQnx/FgwQnxONCSysMap.ini file.
0026	ERROR	**Profile Error. SystemStatusAreaDuplicate.**	
		Meaning	There are duplications in the list map and system status area.
		Cause	As above.
		Correction	Check for duplication in the list map and system status area.
0027	ERROR	**Profile Error. Can't find SystemMemoryName in FgwQnx.ini = [**%s**]**	
		Meaning	The memory name indicated by %s in the syslog message is missing from the /etc/FgwQnx/FgwQnx.ini file.
		Cause	As above.
		Correction	Restore the Open Network Controller settings to their default values (turn ON pin 4 of SW2).
0028	ERROR	**Fins_new Failed. UnitID = [**%d]	
		Meaning	The network provider could not be registered (the SPR unit number is indicated by %d in the sys-log message)
		Cause	The unit number is duplicated.
		Correction	Check for duplication of the SPR unit number under UnitID in the /etc/FgwQnx/FgwQnx.ini file.
0029	ERROR	**Can't exec process=%s.**	
		Meaning	The SramErr process could not be started.
		Cause	A process of the same name may already be started.
		Correction	Restart the Open Network Controller.
0030	ERROR	**Can't fork process.**	
		Meaning	The SramErr process could not be started.
		Cause	A process of the same name may already be started.
		Correction	Restart the Open Network Controller.
0031	ERROR	**Unit Duplicate.**	
		Meaning	The process could not be started.
		Cause	A process of the same name may already be started.
		Correction	Check the Web Service task list to see if the Spr process has been started more than once.
0034	ERROR	**Can't find ONC_ERR_LED7 process.**	
		Meaning	The process could not be started.
		Cause	A process of the same name may already be started.
		Correction	Check the Web Service task list to see if the ONC_ERR_LED7 process has been started.
0035	ERROR	**Can't find ONC_ERR_LED7 process.**	
		Meaning	A send error occurred when sending a message to the ONC_ERR_LED7 process.
		Cause	The ONC_ERR_LED7 may not be running.
		Correction	Check the Web Service task list to see if the ONC_ERR_LED7 process has been started.
0036	ERROR	**Can't find ONCSysUnit process.**	
		Meaning	The process could not be started.
		Cause	A process of the same name may already be started.
		Correction	Check the Web Service task list to see if the Spr process has been started more than once.
0038	ERROR	**FgwProfile_setPriorityEx Failed.**	
		Meaning	Priority cannot be set.
		Cause	An invalid priority value has been set.
		Correction	Check to be sure SPR=23 has been set under Priority in the /etc/FgwQnx/FgwQnx.ini file.

ID	Level	syslog message		
0039	ERROR	**FgwProfile_setScheduleType Failed.**		
			Meaning	The scheduler cannot be set.
			Cause	The schedule setting is not valid.
			Correction	Check to be sure SPR=OTHER has been set under Schedule in the /etc/FgwQnx/FgwQnx.ini file.
0040	ERROR	**Can't open Sram Memory.**		
			Meaning	SRAM cannot be initialized.
			Cause	SRAM has been corrupted or the system status area size is not valid.
			Correction	Check the battery and the system status area setting.
0041	ERROR	**SRAM_ERR Argument mismatch. (argc =** %d**, argv[0] =** %s**)**		
			Meaning	Process argument error.
			Cause	As above.
			Correction	Restore the Open Network Controller settings to their default values (turn ON pin 4 of SW2).
0042	ERROR	**FINS Argument mismatch. (argc =** %d**, argv[0] =** %s**)**		
			Meaning	Process argument error.
			Cause	As above.
			Correction	Restore the Open Network Controller settings to their default values (turn ON pin 4 of SW2).
0043	ERROR	**Can't EventMemory Open = [**%s**].**		
			Meaning	An event memory open error has occurred.
			Cause	There may have been insufficient resources.
			Correction	Restart the Open Network Controller.
0044	ERROR	**Can't open Sram.**		
			Meaning	SRAM cannot be initialized.
			Cause	SRAM has been corrupted or the system status area size is not valid.
			Correction	Check the battery and the system status area setting.
0045	ERROR	**Can't Find MemoryName in MapFile.**		
			Meaning	The event memory sizes are not set.
			Cause	The setup file may be corrupted.
			Correction	Restore the Open Network Controller settings to their default values (turn ON pin 4 of SW2).
0046	ERROR	**Memory Size Over in MapFile.**		
			Meaning	Event memory size error
			Cause	As above.
			Correction	Check the event memory sizes.
0047	WARNING	**Map file don't exist, or don't open. [**%s**].**		
			Meaning	FgwQnxONCSysMap.ini cannot be opened.
			Cause	The file does not exist or is corrupted.
			Correction	Delete all list map settings and then reset them from the start.
0048	WARNING	**Receive illegal message by FinsRecv.**		
			Meaning	A protocol other than FINS was received.
			Cause	As above.
			Correction	Set the required items in the list map.
0049	WARNING	**Section is not registered to Map File. [**%s**].**		
			Meaning	There is no valid information in the list map.
			Cause	As above.
			Correction	Set the required items in the list map.
0051	WARNING	**Error I/O Area Offset No = [**%d**].**		
			Meaning	Offset in the list map is not a number or is less than 0.
			Cause	As above.
			Correction	Delete all list map settings and then reset them from the start.
0052	WARNING	**Error I/O Area Size No = [**%d**].**		
			Meaning	Size in the list map is not a number or is less than 0.
			Cause	As above.
			Correction	Delete all list map settings and then reset them from the start.

ID	Level	syslog message		
0053	WARNING	**Error I/O Area CopyDirection = [%d].**		
			Meaning	Backup/restore direction setting error.
			Cause	As above.
			Correction	Delete all list map settings and then reset them from the start.
0054	WARNING	**Get kill Signal.**		
			Meaning	An end signal was received.
			Cause	There may have been a forced end.
			Correction	Check the settings.
0055	WARNING	**Receive illegal message.**		
			Meaning	A message was received from a process other than ONC_ERR_LED7.
			Cause	_
			Correction	No correction required.
0056	WARNING	**Warn Receive No Defined Fins Command.**		
			Meaning	Illegal FINS command.
			Cause	As above.
			Correction	Check the FINS command that was sent.
0057	WARNING	**Warn Fins Command Data Size Over.**		
			Meaning	A FINS command response is not required or a FINS command was received from another node.
			Cause	As above.
			Correction	Check the FINS command that was received.

CLK_Unit and SLK_Unit (FGW-CLK and FGW-SLK)

Note The error messages in the following table are for Controller Link. The same messages are used for SYSMAC LINK. Simply replace “Clk” in the following table with “Slk” for SYSMAC LINK.

ID	Level	syslog message		
0002	ERROR	**Profile Error. TickSize = [%d]**		
			Meaning	The TickSize setting (indicated by %d in the syslog message) is not valid.
			Cause	As above.
			Correction	Check to be sure Ticksize in the /etc/FgwQnx/FgwQnx.ini is set to 500 or 1000.
0003	ERROR	**Profile Error.UnitID = [%d]**		
			Meaning	The Clk0 Unit number setting (Indicated by %d in the syslog message) is not valid.
			Cause	As above.
			Correction	Check to be sure the Clk0 unit number is set to between 16 and 31 under UnitID in the /etc/FgwQnx/FgwQnx.ini file.
0004	ERROR	**Profile Error.NodeID = [%d]**		
			Meaning	The node number setting (indicated by %d in the syslog message) is not valid.
			Cause	As above.
			Correction	Use the setting tool to check that the node number is set between 1 and 62.
0005	ERROR	**Profile Error.RefreshMethod = [%d]**		
			Meaning	The refresh method setting is invalid.
			Cause	As above.
			Correction	Check that RefreshMethod is set to 0: Timer or 1: Message under Clk0 in the /etc/FgwQnx/FgwQnxClk.ini file.
0006	ERROR	**Profile Error.RefreshTimer = [%d]**		
			Meaning	The refresh interval setting (indicated by %d in the syslog message) is not valid.
			Cause	As above.
			Correction	Use the setting tool to check that the refresh interval is set between 1 and 9999.

ID	Level	syslog message	
0007	ERROR	**Profile Error.TriggerType = [%d]**	
		Meaning	The trigger setting is out of range.
		Cause	As above.
		Correction	Check that TriggerType is set to 0: Message not send or 1: Message send enabled under Clk0 in the /etc/FgwQnx/FgwQnxClk.ini file.
0008	ERROR	**Profile Error.TriggerMethod = [%d]**	
		Meaning	The trigger method setting is out of range.
		Cause	As above.
		Correction	Check that TriggerMethod is set to 0: Send or 1: Trigger under Clk0 in the /etc/FgwQnx/FgwQnx-Clk.ini file.
0009	ERROR	**Profile Error.TriggerName**	
		Meaning	The trigger process name setting is out of range.
		Cause	As above.
		Correction	Check to be sure the Trigger Name under Clk0 in the /etc/FgwQnx/FgwQnxClk.ini file is set to a trigger process name (The default is Triggerprocess.)
0010	ERROR	**Profile Error.TriggerMessage**	
		Meaning	The trigger message setting is out of range.
		Cause	As above.
		Correction	Check to be sure the Trigger_Msg under Clk0 in the /etc/FgwQnx/FgwQnxClk.ini file is set (The default is I/O_Trigger.)
0011	ERROR	**Profile Error.SyncClockTimer**	
		Meaning	The clock refresh setting is out of range.
		Cause	As above.
		Correction	Check to be sure the SyncClockTimer setting under Clk0 in the /etc/FgwQnx/FgwQnxClk.ini file is set to 0: Do not sync or 1: Refresh Board time information.
0012	ERROR	**Profile Error. MaxLink**	
		Meaning	The MaxLink setting is out of range.
		Cause	As above.
		Correction	Check to be sure the MaxLink under Clk0 in the /etc/FgwQnx/FgwQnxClk.ini file is set (The default is 62000 for CLK and 32000 for SLK.
0013	ERROR	**Can't agree BoardName**	
		Meaning	The Board model setting is not valid.
		Cause	The model in the setup file does not agree with the model of the Board.
		Correction	Be sure the Board model agrees with the Board that is mounted.
0014	ERROR	**Fins_new Failed.**	
		Meaning	The network provider could not be registered.
		Cause	The network number or unit address is already in use.
		Correction	Use the setting tool to check that the network number is used only once. Also, check that the Clk0 unit address under UnitID in the /etc/FgwQnx/FgwQnx.ini file is not used by another unit. (Note: The default setting for both Clk0 and Slk0 unit numbers is 18.)
0015	ERROR	**Can't duplicate Fins Handle.**	
		Meaning	The process could not be started.
		Cause	A process of the same name may have already been started.
		Correction	Use the setting tool to check that the network number is used only once. Also, check that the Clk0 unit address under UnitID in the /etc/FgwQnx/FgwQnx.ini file is not used by another unit. (Note: The default setting for both Clk0 and Slk0 unit numbers is 18.)
0016	ERROR	**Can't exec process=%s.**	
		Meaning	System error.
		Cause	The process failed to start.
		Correction	Restart the Open Network Controller.
0017	ERROR	**Can't fork process.**	
		Meaning	System error.
		Cause	The process failed to start.
		Correction	Restart the Open Network Controller.

ID	Level	syslog message		
0018	ERROR	**Unit Duplicate.**		
			Meaning	The process name could not be registered.
			Cause	A process of the same name may have already been started.
			Correction	Check to see if the CLK or SLK has been started twice.
0019	ERROR	**Can't shared file open.**		
			Meaning	System error.
			Cause	Failed to open shared memory object.
			Correction	Restart the Open Network Controller.
0020	ERROR	**Can't map memory.**		
			Meaning	System error.
			Cause	Failed to map memory object area due to system error.
			Correction	Restart the Open Network Controller.
0021	ERROR	**Unable to attach timer proxy.**		
			Meaning	System error.
			Cause	Failed to generate timer proxy process.
			Correction	Restart the Open Network Controller.
0022	ERROR	**Unable to create timer.**		
			Meaning	System error.
			Cause	Failed to create timer.
			Correction	Restart the Open Network Controller.
0023	ERROR	**Unable to attach interrupt proxy.**		
			Meaning	System error.
			Cause	Failed to create interrupt proxy process.
			Correction	Restart the Open Network Controller.
0024	ERROR	**Unable to attach interrupt.**		
			Meaning	System error.
			Cause	Failed to attach handle to hardware interrupt.
			Correction	Restart the Open Network Controller.
0025	ERROR	**Can't get sender process ID.**		
			Meaning	Could not find sender process.
			Cause	As above.
			Correction	Restart the Open Network Controller.
0026	ERROR	**Can't get receiver process ID.**		
			Meaning	Could not find receiver process.
			Cause	As above.
			Correction	Restart the Open Network Controller.
0027	ERROR	**Fins_changeNetworkProvider Failed.**		
			Meaning	System error.
			Cause	Failed to change network provider.
			Correction	Restart the Open Network Controller.
0028	ERROR	**Not Exist Driver Process.**		
			Meaning	System error.
			Cause	Failed in communications between processes.
			Correction	Restart the Open Network Controller.
0029	ERROR	**Argument mismatch. (argc =** %d**, argv[0] =** %s**)**		
			Meaning	Illegal argument when starting Unit.
			Cause	As above.
			Correction	Restore the Open Network Controller settings (turn ON pin 4 of SW2.)
0030	ERROR	**FgwProfile_setPriorityEx Failed.**		
			Meaning	Failed to set process priority.
			Cause	The priority setting is not valid.
			Correction	Check that Clk0=23 is set under Priority in the /etc/FgwQnx/FgwQnx.ini file.

ID	Level	syslog message		
0031	ERROR	**FgwProfile_setScheduleType Failed.**		
			Meaning	Failed to set process scheduler type.
			Cause	The schedule setting is not valid.
			Correction	Check that Clk0=RoundRobin is set under Schedule in the /etc/FgwQnx/FgwQnx.ini file.
0032	ERROR	**PCI:OS info failure**		
			Meaning	System error.
			Cause	Failed to get node information.
			Correction	Check to see if the BIOS is compatible with the PCI.
0033	ERROR	**PCI:BIOS failure**		
			Meaning	System error.
			Cause	A BIOS for the PCI does not exist.
			Correction	Check to see if the BIOS is compatible with the PCI.
0034	ERROR	**PCI:no Boards**		
			Meaning	Cannot find PCI Board.
			Cause	The PCI Board may not be mounted.
			Correction	Check to see if the Board is mounted correctly.
0035	ERROR	**PCI:irq failure**		
			Meaning	System error.
			Cause	Cannot get IRQ number.
			Correction	Restart the Open Network Controller.
0036	ERROR	**PCI:mem/io failure base0**		
			Meaning	System error.
			Cause	Cannot get memory base address.
			Correction	Restart the Open Network Controller.
0037	ERROR	**Can't find Board.**		
			Meaning	Board ID, model or argument when starting Unit was not valid.
			Cause	As above.
			Correction	Check the Board ID, model, and arguments when starting the Unit.
0038	ERROR	**Recv NetHalt Interrupt from Nsb.**		
			Meaning	An error signal was received from the Board (data link function fatal error, duplicate address error, JABBER, or hardware error).
			Cause	As above.
			Correction	Perform troubleshooting for the Board.
0039	ERROR	**F/W State Error. State = 0x**%x**.**		
			Meaning	There is an error in the system status of the Board.
			Cause	As above.
			Correction	Perform troubleshooting for the Board.
0040	ERROR	**Profile Error.SystemSw2**		
			Meaning	The system SW2 setting is not valid (when using Controller Link only).
			Cause	As above.
			Correction	Check to be sure SystemSW2 is set under Clk0 in the /etc/FgwQnx/FgwQnxClk.ini file (The default is 0x00.)
0041	ERROR	**This Board is not supporting 62 Node.**		
			Meaning	The System SW2 setting is not valid.
			Cause	The System SW2 setting does not match the type of Board.
			Correction	Correct the setting of the Board model.
0042	ERROR	**Don't Open Event Memory Status_Net_Name [**%s**]**		
			Meaning	Failed to open event memory to reflect network status.
			Cause	As above.
			Correction	Use the setting tool to reset the network status area name.

ID	Level	syslog message	
0043	ERROR	**Don't Open Event Memory Status_Link_Name [%s]**	
		Meaning	Failed to open event memory to reflect data link status.
		Cause	As above.
		Correction	Use the setting tool to reset the data link status area name.
0044	ERROR	**Don't Open Event Memory Table_Link_Name [%s]**	
		Meaning	Failed to open event memory to reflect data link table.
		Cause	As above.
		Correction	Check to be sure the Table Link Name under Clk0 in the /etc/FgwQnx/FgwQnxClk.ini file is set to an event memory name.
0045	WARNING	**Error Status_Net_Name = [%s].**	
		Meaning	Name of event memory to reflect network status (indicated by %s in the syslog message) is not valid.
		Cause	As above.
		Correction	Use the setting tool to check the network status area name is set correctly.
0046	WARNING	**Error Status_Net_Size = [%d].**	
		Meaning	Size of event memory to reflect network status (indicated by %d in the syslog message) is not valid.
		Cause	As above.
		Correction	Use the setting tool to check the network status size is set correctly.
0047	WARNING	**Error Status_Link_Name = [%s].**	
		Meaning	Name of event memory to reflect data link status (indicated by %s in the syslog message) is not valid.
		Cause	As above.
		Correction	Use the setting tool to check the data link status area name is set correctly.
0048	WARNING	**Error Status_Link_Size = [%d].**	
		Meaning	Size of event memory to reflect data link status (indicated by %d in the syslog message) is not valid.
		Cause	As above.
		Correction	Use the setting tool to check the data link status size is set correctly.
0049	WARNING	**Error Table_Link_Name = [%s].**	
		Meaning	Name of event memory to reflect data link table (indicated by %s in the syslog message) is not valid.
		Cause	As above.
		Correction	Check to be sure the Table Link Name under Clk0 in the /etc/FgwQnx/FgwQnxClk.ini file is set to an event memory name.
0050	WARNING	**Error Table_ Link _Size = [%d].**	
		Meaning	Size of event memory to reflect data link table (indicated by %d in the syslog message) is not valid.
		Cause	As above.
		Correction	Use the setting tool to check that the Table Link Size under Clk0 in the /etc/FgwQnx/FgwQnx-Clk.ini file is set to the memory size (W).
0051	WARNING	**Can't get trigger process ID.**	
		Meaning	Could not find trigger process.
		Cause	As above.
		Correction	Restart the Open Network Controller.
0052	WARNING	**Get kill signal.**	
		Meaning	An end signal was received.
		Cause	There may have been a forced end.
		Correction	Check the settings.
0053	WARNING	**Receive illegal message.**	
		Meaning	An unexpected message was received.
		Cause	As above.
		Correction	Check the contents of the trigger process message.

ID	Level	syslog message		
0054	WARNING	**Warn RouteTable. Write CompleteFlag Protected.**		
			Meaning	Error occurred when setting routing tables in Board.
			Cause	As above.
			Correction	Restart the Open Network Controller.
0055	WARNING	**Warn Illegal DataLink Refresh Request**		
			Meaning	A data link refresh was requested at an not valid time.
			Cause	As above.
			Correction	Check to be sure the refresh interval is suitable.
0056	WARNING	**Warn Event Send Area Busy.**		
			Meaning	An error occurred sending a FINS command to the Board.
			Cause	As above.
			Correction	Restart the Open Network Controller.
0057	WARNING	**Warn Anull Event Send Data.**		
			Meaning	A FINS command sent from the Board was corrupt.
			Cause	As above.
			Correction	Restart the Open Network Controller.
0059	WARNING	**Warn Fins Command Data Size Over.**		
			Meaning	The FINS command data is too large.
			Cause	As above.
			Correction	Check the data size of the FINS command.
0060	WARNING	**Warn Fins Response Data Size Over.**		
			Meaning	The FINS response data is too large.
			Cause	As above.
			Correction	Check the data size of the FINS response.
0061	WARNING	**Error DataLinkTable Type of Area1.**		
			Meaning	Data link table setting area type for area 1 is not valid.
			Cause	As above.
			Correction	Check the area type of area 1 in the data link table settings.
0062	WARNING	**Error DataLinkTable Type of Area2.**		
			Meaning	Data link table setting area type for area 2 is not valid.
			Cause	As above.
			Correction	Check the area type of area 2 in the data link table settings.
0063	WARNING	**Can't get RouteTable from FinsGateway.**		
			Meaning	An error occurred when getting the routing tables.
			Cause	As above.
			Correction	Restart the Open Network Controller.
0064	ERROR	**Don't Open Event Memory RecvAreaName1 [%s]**		
			Meaning	Failed to open event memory to reflect Receive Area 1.
			Cause	As above.
			Correction	Restart the Open Network Controller.
0065	ERROR	**Don't Open Event Memory RecvAreaName2 [%s]**		
			Meaning	Failed to open event memory to reflect Receive Area 2.
			Cause	As above.
			Correction	Restart the Open Network Controller.
0066	ERROR	**Don't Open Event Memory SendAreaName1 [%s]**		
			Meaning	Failed to open event memory to reflect Send Area 1.
			Cause	As above.
			Correction	Restart the Open Network Controller.
0067	ERROR	**Don't Open Event Memory SendAreaName2 [%s]**		
			Meaning	Failed to open event memory to reflect Send Area 2.
			Cause	As above.
			Correction	Restart the Open Network Controller.

DRM_Unit (FGW-DRM)

Note Replace DRM0 in the following table with DRM1 for DeviceNet PCI Scanner Board errors.

ID	Level	syslog message		
0002	ERROR	**Argument mismatch. (argc =** %d**, argv[0] =** %s**)**		
			Meaning	Illegal argument when starting Unit.
			Cause	As above.
			Correction	Restore the Open Network Controller settings (turn ON pin 4 of SW2.)
0004	ERROR	**Profile Error. UnitID = [**%d**]**		
			Meaning	The DRM0 unit setting (indicated by %d in the syslog message) is not valid.
			Cause	As above.
			Correction	Check to be sure the DRM0 unit number is set to between 16 and 31 under UnitID in the /etc/FgwQnx/FgwQnx.ini file.
0005	ERROR	**Profile Error.NodeID = [**%d**]**		
			Meaning	The DRM0 node number setting (indicated by %d in the syslog message) is not valid.
			Cause	As above.
			Correction	Use the setting tool to check that the node number is set to between 1 and 63.
0007	ERROR	**Profile Error.Baudrate = [**%d**]**		
			Meaning	The baud rate setting is out of range.
			Cause	As above.
			Correction	Use the setting tool to check the baud rate is set correctly.
0008	ERROR	**Profile Error.StartScanMode = [**%d**]**		
			Meaning	The startup scan mode setting is out of range.
			Cause	As above.
			Correction	Use the setting tool to check that the startup scan mode is set correctly.
0009	ERROR	**Profile Error.ComErrStop = [**%d**]**		
			Meaning	The ComErrStop setting is out of range.
			Cause	As above.
			Correction	Use the setting tool to check that the setting for communications errors is correct.
0010	ERROR	**Profile Error.ComErrData = [**%d**]**		
			Meaning	The ComErrData setting is out of range.
			Cause	As above.
			Correction	Check that ComErrData under DRM0 in the /etc/FgwQnx/FgwQnxDrmPCI.ini file is set to 0 or 1.
0011	ERROR	**Profile Error.ScanCycleTime = [**%d**]**		
			Meaning	The scan cycle time setting (indicated by %d in the syslog message) is not valid.
			Cause	As above.
			Correction	Use the setting tool to check that the scan cycle time is set to between 0 and 500.
0012	ERROR	**Profile Error.EventCycleTime = [**%d**]**		
			Meaning	The event cycle time setting (indicated by %d in the syslog message) is not valid.
			Cause	As above.
			Correction	Use the setting tool to check that the event cycle time is set to between 0 and 10000.
0013	ERROR	**Profile Error.MasterFunction = [**%d**]**		
			Meaning	The master function setting is out of range.
			Cause	As above.
			Correction	Use the setting tool to reset the master function selection.
0014	ERROR	**Profile Error.ScanMode = [**%d**]**		
			Meaning	The scan mode setting is out of range.
			Cause	As above.
			Correction	Use the setting tool to check that the scan list for the master function is set correctly.
0016	ERROR	**Profile Error.RefreshMethod = [**%d**]**		
			Meaning	The refresh method setting is out of range.
			Cause	As above.
			Correction	Check to be sure the refresh method under DRM0 in the /etc/FgwQnx/FgwQnxDrmPCI.ini file is set to 0 or 1.

ID	Level	syslog message	
0018	ERROR	**Profile Error.TriggerType = [**%d**]**	
		Meaning	The trigger setting is out of range.
		Cause	As above.
		Correction	Check to be sure the Trigger Type under DRM0 in the /etc/FgwQnx/FgwQnxDrmPCI.ini file is set to 0: Message not send or 1: Message send enabled.
0019	ERROR	**Profile Error.TriggerMethod = [**%d**]**	
		Meaning	The trigger method setting is out of range.
		Cause	As above.
		Correction	Check to be sure the Trigger Method under DRM0 in the /etc/FgwQnx/FgwQnxDrmPCI.ini file is set to 0: Send or 1: Trigger.
0021	ERROR	**Profile Error.TriggerMessage**	
		Meaning	The trigger message setting is out of range.
		Cause	As above.
		Correction	Check to be sure the Trigg_Msg under DRM0 in the /etc/FgwQnx/FgwQnxDrmPCI.ini file is set (The default is I/O_Trigger.)
0022	ERROR	**Profile Error.InAreaSize1 = [**%d**]**	
		Meaning	The input area 1 size (indicated by %d in the syslog message) is not valid.
		Cause	As above.
		Correction	Use the setting tool to set the input area 1 size to between 0 and 6400.
0023	ERROR	**Profile Error.InAreaSize2 = [**%d**]**	
		Meaning	The input area 2 size (indicated by %d in the syslog message) is not valid.
		Cause	As above.
		Correction	Use the setting tool to set the input area 2 size to between 0 and 6400.
0024	ERROR	**Profile Error.OutAreaSize1 = [**%d**]**	
		Meaning	The output area 1 size (indicated by %d in the syslog message) is not valid.
		Cause	As above.
		Correction	Use the setting tool to set the output area 1 size to between 0 and 6400.
0025	ERROR	**Profile Error.OutAreaSize2 = [**%d**]**	
		Meaning	The output area 2 size (indicated by %d in the syslog message) is not valid.
		Cause	As above.
		Correction	Use the setting tool to set the output area 2 size to between 0 and 6400.
0026	ERROR	**Profile Error.SlaveFunction = [**%d**]**	
		Meaning	The slave function setting is not valid.
		Cause	As above.
		Correction	Use the setting tool to check the slave function selection.
0028	ERROR	**Profile Error.SlaveInAreaSize = [**%d**]**	
		Meaning	The slave input area size (indicated by %d in the syslog message) is not valid.
		Cause	As above.
		Correction	Use the setting tool to check that the slave input area size is set to between 0 and 100.
0029	ERROR	**Profile Error.SlaveOutAreaSize = [**%d**]**	
		Meaning	The slave output area size (indicated by %d in the syslog message) is not valid.
		Cause	As above.
		Correction	Use the setting tool to check that the slave output area size is set to between 0 and 100.
0030	ERROR	**Profile Error.StatusAreaSize = [**%d**]**	
		Meaning	The status area size (indicated by %d in the syslog message) is not valid.
		Cause	As above.
		Correction	Check to be sure that the Status Area Size under DRM0 in the /etc/FgwQnx/FgwQnxDrmPCI.ini file is set to 90.
0031	ERROR	**Don't Open Event Memory InAreaName1 [**%s**]**	
		Meaning	Failed to open event memory to reflect input area 1.
		Cause	As above.
		Correction	Restart the Open Network Controller.

ID	Level	syslog message		
0032	ERROR	**Don't Open Event Memory InAreaName2 [%s]**		
			Meaning	Failed to open event memory to reflect input area 2.
			Cause	As above.
			Correction	Restart the Open Network Controller.
0033	ERROR	**Don't Open Event Memory OutAreaName1 [%s]**		
			Meaning	Failed to open event memory to reflect output area 1.
			Cause	As above.
			Correction	Restart the Open Network Controller.
0034	ERROR	**Don't Open Event Memory OutAreaName2 [%s]**		
			Meaning	Failed to open event memory to reflect output area 2.
			Cause	As above.
			Correction	Restart the Open Network Controller.
0035	ERROR	**Don't Open Event Memory StatusAreaName [%s]**		
			Meaning	Failed to open event memory to reflect status area.
			Cause	As above.
			Correction	Restart the Open Network Controller.
0036	ERROR	**Fins_new Failed.**		
			Meaning	The network provider could not be registered.
			Cause	The network number or unit address is already in use.
			Correction	Use the setting tool to check that the network number is used only once. Also, check that the DRM0 unit address under UnitID in the /etc/FgwQnx/FgwQnx.ini file is not used by another unit.
0037	ERROR	**Can't duplicate Fins Handle.**		
			Meaning	The process could not be started.
			Cause	A process of the same name may have already been started.
			Correction	Use the setting tool to check that the network number is used only once. Also, check that the DRM0 unit address under UnitID in the /etc/FgwQnx/FgwQnx.ini file is not used by another unit.
0038	ERROR	**Receive pid Error[%d].**		
			Meaning	A message was received from an illegal process.
			Cause	An illegal process may have sent a message.
			Correction	Check for illegal processes.
0039	ERROR	**Can't exec process=%s.**		
			Meaning	System error.
			Cause	A process failed to start.
			Correction	Check the driver process name and execution rights.
0040	ERROR	**Can't fork process.**		
			Meaning	System error.
			Cause	A process failed to be created.
			Correction	Restart the Open Network Controller.
0041	ERROR	**Unit Duplicate.**		
			Meaning	Failed to register process name.
			Cause	A process of the same name may have already been started.
			Correction	Check to see if DRM_UNIT has been started more than once.
0043	ERROR	**Don't Open Scanlist file =** %s **.**		
			Meaning	Failed to open scan list file.
			Cause	The specified file is missing or is not usable.
			Correction	Check to be sure /etc/FgwQnx/scanlist.ini exists.
0044	ERROR	**Can't shared file open.**		
			Meaning	System error.
			Cause	Failed to open shared memory object.
			Correction	Restart the Open Network Controller.

ID	Level	syslog message		
0045	ERROR	**Can't map memory.**		
			Meaning	System error.
			Cause	Failed to map memory object area.
			Correction	Restart the Open Network Controller.
0054	ERROR	**Unable to attach proxy.**		
			Meaning	System error.
			Cause	Failed to generate proxy process.
			Correction	Restart the Open Network Controller.
0055	ERROR	**Unable to create timer.**		
			Meaning	System error.
			Cause	Failed to create timer.
			Correction	Restart the Open Network Controller.
0056	ERROR	**Unable to attach interrupt.**		
			Meaning	System error.
			Cause	Failed to attach handle to hardware interrupt.
			Correction	Restart the Open Network Controller.
0058	ERROR	**Can't get sender process ID.**		
			Meaning	Could not find sender process.
			Cause	As above.
			Correction	Restart the Open Network Controller.
0059	ERROR	**Can't get receiver process ID.**		
			Meaning	Could not find receiver process.
			Cause	As above.
			Correction	Restart the Open Network Controller.
0064	ERROR	**addObjectClass Error [0x%x].**		
			Meaning	Failed to register object.
			Cause	As above.
			Correction	Restart the Open Network Controller.
0067	ERROR	**online Error.**		
			Meaning	Cannot go online.
			Cause	The network is not started or network settings are not valid.
			Correction	Use the setting tool to check the communications settings.
0068	ERROR	**StartScan Error [TimeOut]**		
			Meaning	The start scan ended in an error.
			Cause	As above.
			Correction	Check the scan list settings.
0069	ERROR	**StartScan Error [0x%x].**		
			Meaning	The start scan ended in an error.
			Cause	As above.
			Correction	Check the scan list settings.
0072	ERROR	**PCI:no Boards**		
			Meaning	Cannot find PCI Board (only when DeviceNet PCI Scanner Board used).
			Cause	The Board may not be mounted.
			Correction	Check to see if the Board is mounted correctly.
0073	ERROR	**PCI:irq failure**		
			Meaning	System error.
			Cause	Cannot get IRQ number.
			Correction	Restart the Open Network Controller.
0074	ERROR	**PCI:mem/io failure base0**		
			Meaning	System error.
			Cause	Cannot get memory base address.
			Correction	Restart the Open Network Controller.

ID	Level	syslog message	
0076	ERROR	**Can't find Board. ID = 0x**%x**.**	
		Meaning	Board ID, model, or argument when starting Unit was not valid.
		Cause	As above.
		Correction	Check to see if the Board is mounted correctly.
0078	ERROR	**F/W State Error. State = 0x**%x**.**	
		Meaning	The PCI Board firmware status shows an error (only when DeviceNet PCI Scanner Board used).
		Cause	As above.
		Correction	Check to see if the Board is mounted correctly.
0079	ERROR	**Scanner Funtion Error. ScannerState1 = 0x**%x	
		Meaning	The PCI Board firmware scanner status shows an error (only when DeviceNet PCI Scanner Board used).
		Cause	As above.
		Correction	Restart the Open Network Controller.
0080	ERROR	**No Communicate Master. State = 0x**%x**.**	
		Meaning	The PCI Board firmware master refresh operation ended in an error (only when DeviceNet PCI Scanner Board used).
		Cause	As above.
		Correction	Restart the Open Network Controller.
0081	ERROR	**No Communicate Slave. State = 0x**%x**.**	
		Meaning	The PCI Board firmware slave refresh operation ended in an error (only when DeviceNet PCI Scanner Board used).
		Cause	As above.
		Correction	Restart the Open Network Controller.
0082	ERROR	**exec SetMsgTimer Error .**	
		Meaning	The PCI Board firmware message timer registration operation ended in an error (only when DeviceNet PCI Scanner Board used).
		Cause	As above.
		Correction	Restart the Open Network Controller.
0083	ERROR	**exec RegisterSlave Error .**	
		Meaning	The PCI Board firmware slave registration operation ended in an error (only when DeviceNet PCI Scanner Board used).
		Cause	As above.
		Correction	Restart the Open Network Controller.
0084	ERROR	**exec LoadMsgTimerList Error .**	
		Meaning	The PCI Board firmware message timer read operation ended in an error (only when DeviceNet PCI Scanner Board used).
		Cause	As above.
		Correction	Restart the Open Network Controller.
0085	ERROR	**exec LoadScanList Error .**	
		Meaning	The PCI Board firmware scan list read operation ended in an error (only when DeviceNet PCI Scanner Board used).
		Cause	As above.
		Correction	Restart the Open Network Controller.
0086	ERROR	**exec RegisterSelfSlave Error .**	
		Meaning	The PCI Board firmware slave function registration operation ended in an error (only when DeviceNet PCI Scanner Board used).
		Cause	As above.
		Correction	Restart the Open Network Controller.
0087	ERROR	**exec LoadSelfSlave Error .**	
		Meaning	The PCI Board firmware slave function registration operation ended in an error (only when DeviceNet PCI Scanner Board used).
		Cause	As above.
		Correction	Restart the Open Network Controller.

ID	Level	syslog message		
0088	ERROR	**exec LoadSelfSlave Error .**		
			Meaning	The PCI Board firmware slave function registration operation ended in an error (only when DeviceNet PCI Scanner Board used).
			Cause	As above.
			Correction	Restart the Open Network Controller.
0089	ERROR	**exec ConnectSelfSlave Error .**		
			Meaning	The PCI Board firmware slave function registration operation ended in an error (only when DeviceNet PCI Scanner Board used).
			Cause	As above.
			Correction	Restart the Open Network Controller.
0090	WARNING	**[scanlist] Error MacID [**%d**].**		
			Meaning	The MacID setting in the scan list file (indicated by %d in the syslog message) is not valid.
			Cause	As above.
			Correction	Check to be sure the MacID in the scan list is set to between 0 and 63.
0091	WARNING	**[scanlist] Error InArea [**%d**].**		
			Meaning	The input area setting in the scan list file (indicated by %d in the syslog message) is not valid.
			Cause	As above.
			Correction	Check the range of the input area in the scan list.
0092	WARNING	**[scanlist] Error InOffset [**%d**].**		
			Meaning	The input area offset setting in the scan list file (indicated by %d in the syslog message) is not valid.
			Cause	As above.
			Correction	Check the starting address of the input area in the scan list.
0093	WARNING	**[scanlist] Error InSize [%d].**		
			Meaning	The input area size setting in the scan list file (indicated by %d in the syslog message) is not valid.
			Cause	As above.
			Correction	Check the size of the input area in the scan list.
0094	WARNING	**[scanlist] Error InOffset+InSize [**%d**].**		
			Meaning	The combination of the input area offset and input area size settings in the scan list file is outside the input area range.
			Cause	As above.
			Correction	Check the settings for the input area in the scan list.
0095	WARNING	**[scanlist] Error OutArea [**%d**].**		
			Meaning	The output area setting in the scan list file (indicated by %d in the syslog message) is not valid.
			Cause	As above.
			Correction	Check the range of the output area in the scan list.
0096	WARNING	**[scanlist] Error OutOffset [**%d**].**		
			Meaning	The output area offset setting in the scan list file (indicated by %d in the syslog message) is not valid.
			Cause	As above.
			Correction	Check the starting address of the output area in the scan list.
0097	WARNING	**[scanlist] Error OutSize [**%d**].**		
			Meaning	The output area size in the scan list file (indicated by %d in the syslog message) is not valid.
			Cause	As above.
			Correction	Check the size of the output area in the scan list.
0098	WARNING	**[scanlist] Error OutOffset+OutSize [**%d**].**		
			Meaning	The combination of the output area offset and the output area size is outside the output area range.
			Cause	As above.
			Correction	Check the settings for the output area in the scan list.
0100	WARNING	**Get kill signal.**		
			Meaning	An end signal was received.
			Cause	There may have been a forced end.
			Correction	Check the settings.

ID	Level	syslog message		
0101	WARNING	**Receive illegal message.**		
			Meaning	A data link refresh was requested at an invalid time.
			Cause	As above.
			Correction	Check the network status.
0102	WARNING	**Can't get trigger process ID.**		
			Meaning	Could not find trigger process.
			Cause	As above.
			Correction	Restart the Open Network Controller.
0103	ERROR	**Fins_changeNetworkProvider Failed.**		
			Meaning	System error.
			Cause	Could not change to the network provider.
			Correction	Restart the Open Network Controller.
0104	ERROR	**FgwProfile_setPriorityEx Failed.**		
			Meaning	System error.
			Cause	Failed to set process priority.
			Correction	Check that DRM0=23 is set under Priority in the /etc/FgwQnx/FgwQnx,ini file.
0105	ERROR	**FgwProfile_setScheduleType Failed.**		
			Meaning	System error.
			Cause	Failed to set process scheduler type.
			Correction	Check that DRM0=RoundRobin is set under Schedule in the /etc/FgwQnx/FgwQnx,ini file.

HLK_Unit (FGW-HLK)

Note The star (*) at the start of the syslog message (HLK*) is replaced by a value to indicate HLK0 to HLK3.

ID	Level	syslog message		
0002	ERROR	**[HLK*] error : Argument mismatch. (argc =** %d_**argv[0] =** %s**)**		
			Meaning	The number of arguments is wrong.
			Cause	Same as above.
			Correction1	Do not start only HLK*.
			Correction2	Check the command lines under HLK* in the /etc/FgwQnx/FgwQnx.ini for mistakes.
0003	ERROR	**[HLK*] error : Name is already used.**		
			Meaning	The process has already been started.
			Cause	A process with the same name has already been started.
			Correction	Make sure that the same network provider has not been set more than once.
0005	ERROR	**[HLK*] error : COM configuration error(ret =** %d**)**		
			Meaning	COM settings are wrong. The incorrect setting is indicated by %d in the syslog message. -6: The data bit length for the corresponding HLK Unit is wrong. -7: The stop bit length for the corresponding HLK Unit is wrong. -8: The parity for the corresponding HLK Unit is wrong. If another value is returned, the COM Port itself may have an error.
			Cause	Same as above.
			Correction	Correct the setting indicated by the returned value.
0010	ERROR	**[HLK*] error : COMs doesn't Set.**		
			Meaning	The number of serial lines is not set.
			Cause	Same as above.
			Correction	Use the Setting Tool to set the number of serial lines under “Serial settings” to 3.
0011	ERROR	**[HLK*] error : Don't match COM Setting.**		
			Meaning	The corresponding HLK Unit is not set to any COM port.
			Cause	Same as above.
			Correction	Use the Setting Tool to allocate the HLK Unit to a COM Port under “Serial settings”.

ID	Level	syslog message	
0012	ERROR	**[HLK*] error : my UnitID (%d)**	
		Meaning	The HLK* Unit address setting (indicated by %d in the syslog message) is wrong.
		Cause	Same as above.
		Correction	Set the HLK* entry under UnitID in the /etc/FgwQnx/FgwQnx.ini file to between 16 and 31.
0013	ERROR	**[HLK*] error : my NodeID (%d)**	
		Meaning	The HLK* node address setting (indicated by %d in the syslog message) is wrong.
		Cause	Same as above.
		Correction	Use the Setting Tool to correct the setting.
0016	ERROR	**[HLK*] error : No node information data.**	
		Meaning	/etc/FgwQnx/HlkNetTbl.ini cannot be found or the node address table browsed by the HLK* Unit is not registered.
		Cause	Same as above.
		Correction	Check that /etc/FgwQnx/HlkNetTbl.ini exists and use the Setting Tool to set the HlkNetTbl for the corresponding HLK Unit.
0017	ERROR	**[HLK*] error : swaycnvt.dat don't exist or don't open.**	
		Meaning	/etc/FgwQnx/swaycnvt.dat cannot be found or cannot be opened.
		Cause	Same as above.
		Correction	Check /etc/FgwQnx/swaycnvt.dat.
0018	ERROR	**[HLK*] error : Can't exec Driver file [%s]**	
		Meaning	hlkdrv (the HLK driver) cannot be found at the path indicated by %d in the syslog message.
		Cause	Same as above.
		Correction	Check the Web Wervice task list to see if hlkdrv exists.
0019	ERROR	**[HLK*] error : Fins_new failed.(FGW-HLK*)**	
		Meaning	The network provider could not be registered.
		Cause	The network number or unit address is already in use.
		Correction	Use the Setting Tool to check that the network number is used only once. Also, check that the unit address under HLK* entry under Unit ID in the /etc/FgwQnx/FgwQnx.ini file is not being used by another unit.
0022	WARNING	**[HLK*] warning :TimeOut value (%s)**	
		Meaning	The timeout setting (indicated by %s in the syslog message) is wrong.
		Cause	Same as above.
		Correction	Use the Setting Tool to correct the timeout setting.
0023	WARNING	**[HLK*] warning : Retry count (%s)**	
		Meaning	The number of retries setting (indicated by %s in the syslog message) is wrong.
		Cause	Same as above.
		Correction	Use the Setting Tool to correct the retries setting.
0024	WARNING	**[HLK*] warning : receive timeout**	
		Meaning	A reception timed out.
		Cause 1	Communications could not be established.
		Correction 1	Check the communications settings.
		Cause 2	The connected device did not respond.
		Correction 2	Check the connected device to be sure it can respond.
0026	WARNING	**[HLK*] warning : receive signal**	
		Meaning	An end signal was received.
		Cause	The program was stopped by another error.
		Correction	Correct the errors for other error IDs and restart the Controller.
0027	WARNING	**[HLK*] warning : No node infomation.**	
		Meaning	Node information is not set in /etc/FgwQnx/HlkNetTbl.ini.
		Cause	Same as above.
		Correction	Check the contents of HlkNetTbl.
0028	WARNING	**[HLK*] warning : differnt protocol [%s]**	
		Meaning	The protocols set in the HlkNetTbl are different to the actual device.
		Cause	Same as above.
		Correction	Use the same protocol as the communications partner.

ID	Level	syslog message	
0030	WARNING	**[HLK*] warning : receive different response frame.**	
		Meaning	An illegal response frame was received.
		Cause	Same as above.
		Correction	Check the timeout time setting.
0031	WARNING	**[HLK*] warning : toFinsNode address(line:**%d**)**	
		Meaning	The node address set to the line (counted from 0) under HLK* in the /etc/FgwQnx/HlkNetTbl.ini file, indicated by %d in the syslog message, is wrong.
		Cause	Same as above.
		Correction	Check the contents of HlkNetTbl.
0032	WARNING	**[HLK*] warning : SpecSize don't convert to numeric(line:**%d**)**	
		Meaning	The value set the line under HLK* in /etc/FgwQnx/HlkNetTbl.ini, indicated by %d in the syslog message, is wrong. (The value indicates the Host Link Unit number when the connected device is a PLC, the Unit number for Compoway and ID Controllers, and the station number for Power Monitors.)
		Cause	Same as above.
		Correction	Check the contents of HlkNetTbl.
0033	WARNING	**[HLK*] warning : Protocol type don't defined. (line**:%d**)**	
		Meaning	The protocol setting for the line (counted from 0) under HLK* in /etc/FgwQnx/HlkNetTbl.ini, indicated by %d in the syslog message, is wrong.
		Cause	Same as above.
		Correction	Use the Setting Tool to set the correct protocol in the HlkNetTbl for the corresponding HLK Unit.
0034	WARNING	**[HLK*] warning : FinsNode address already used (NodeID =** %d**)**	
		Meaning	The same node number is set twice under HLK* in /etc/FgwQnx/HlkNetTbl.ini. (%d in the syslog message indicates the duplicated node number.)
		Cause	Same as above.
		Correction	Use the Setting Tool to change the duplicated node address in the HlkNetTbl for the corresponding HLK Unit.
0063	WARNING	**[HLK*] warning : Retry count over**	
		Meaning	The number of retries setting has been exceeded.
		Cause 1	Communications could not be established.
		Correction 1	Check the communications settings.
		Cause 2	The connected device did not respond.
		Correction2	Check the connected device to be sure it can respond.
0064	ERROR	**[HLK*] error : Fins_changeNetworkProvider failed.**	
		Meaning	The network provider could not be registered.
		Cause	The network number or unit address is already in use.
		Correction	Use the Setting Tool to check that the network number is used only once. Also, check that the unit address under HLK* entry under Unit ID in the /etc/FgwQnx/FgwQnx.ini file is not being used by another unit.
0065	ERROR	**[HLK*] error : Fgw_setPriority failed.**	
		Meaning	Priority could not be set.
		Cause	The priority settings are wrong.
		Correction 1	Check that HLK*=23 is set under Priority in the /etc/FgwQnx/FgwQnx.ini file.
		Correction 2	Log in as root.
0066	ERROR	**[HLK*] error : Fgw_setScheduleType failed.**	
		Meaning	The schedule could not be set.
		Cause	The schedule settings are wrong.
		Correction	Check that HLK*=OTHER is set under Schedule in the /etc/FgwQnx/FgwQnx.ini file.

ID	Level	syslog message		
0067	ERROR	**[HLK*] error : IRQ is not setting.**		
			Meaning	The IRQ setting for the COM port allocated to HLK* is wrong.
			Cause	Same as above.
			Correction	Set the correct IRQ under COM* in the /etc/FgwQnx/FgwQnx.ini file. The default settings are shown below. _[COM1]_IRQ=4 _[COM2]_IRQ=3 _[COM3]_IRQ=5 _[COM4]_IRQ=7
0068	ERROR	**[HLK*] error : Device is not setting.**		
			Meaning	The device setting for the COM port allocated to HLK* is wrong.
			Cause	Same as above.
			Correction	Set the correct device setting under COM* of the /etc/FgwQnx/FgwQnx.ini file. The default settings are shown below. _[COM1]_Device=/Dev/ser1 _[COM2]_Device=/Dev/ser2 _[COM3]_Device=/Dev/ser3 _[COM4]_Device=/Dev/ser4_

BUSCS1_UNIT (FGW- BUSCS1)

ID	Level	syslog message		
0001	ERROR	**Fins_new Failed.**		
			Meaning	The network provider could not be registered.
			Cause	The network number or unit address is already in use.
			Correction	Use the Setting Tool to check that the network number is used only once. Also, check that the unit address under BUSCS1 entry under Unit ID in the /etc/FgwQnx/FgwQnx.ini file is not being used by another unit.
0002	ERROR	**Fins_changeNetwork Provider Failed.**		
			Meaning	The network provider could not be registered.
			Cause	The network number or unit address is already in use.
			Correction	Use the Setting Tool to check that the network number is used only once. Also, check that the unit address under BUSCS1 entry under Unit ID in the /etc/FgwQnx/FgwQnx.ini file is not being used by another unit.
0003	ERROR	**Profile Error. UnitID = [**%d**].**		
			Meaning	The BUSCS1 Unit number (indicated by %d in the syslog message) is wrong.
			Cause	Same as above.
			Correction	Check that the BUSCS1 entry is set between 16 and 31 under Unit ID in the /etc/FgwQnx/FgwQnx.ini file.
0004	ERROR	**Profile Error. NodeIDONC = [**%d**].**		
			Meaning	The node number of the Open Network Controller (indicated by %d in the syslog message) is wrong.
			Cause	Same as above.
			Correction	Use the Setting Tool to set a number between 1 and 254 that is not being used by the CS1 Unit node.
0005	ERROR	**Profile Error. NodeIDCS1 = [**%d**].**		
			Meaning	The node number of the CS1 Unit (indicated by %d in the syslog message) is wrong.
			Cause	Same as above.
			Correction	Use the Setting Tool to set a number between 1 and 254 that is not being used by the Open Network Controller node.
0007	ERROR	**qnx_name_locate (receiver) Failed.**		
			Meaning	The registered process does not exist.
			Cause	The process could not be registered.
			Correction	Check the process name set in the /etc/FgwQnx/FgwQnxBUSCS1.ini file.

ID	Level	syslog message	
0008	ERROR	**Can't duplicate Fins Handle (sender).**	
		Meaning	The network provider could not be registered.
		Cause	The network number or unit address is already in use.
		Correction	Use the Setting Tool to check that the network number is used only once. Also, check that the unit address under BUSCS1 entry under Unit ID in the /etc/FgwQnx/FgwQnx.ini file is not being used by another unit.
0010	WARNING	**Receive from other process.**	
		Meaning	The message was received from the wrong process.
		Cause	Same as above.
		Correction	Check the setting.
0011	WARNING	**Fins Command Error Command = [**%x%x**].**	
		Meaning	The wrong FINS command was received. (The wrong FINS command code is indicated by %x%x in the syslog message.)
		Cause	Same as above.
		Correction	Check the FINS command transmitted.
0012	ERROR	**Not exist driver process.**	
		Meaning	The driver process does not exist.
		Cause	The driver process did not start.
		Correction	Check the /etc/FgwQnx/FgwQnxBUSCS1.ini file settings.
0013	ERROR	**FgwProfile_setPriorityEx Failed.**	
		Meaning	The priority could not be set.
		Cause	The priority setting is wrong.
		Correction	Check that BUSCS1=23 is set under Priority in the /etc/FgwQnx/FgwQnx.ini file.
0014	ERROR	**FgwProfile_setSchedule Type Failed.**	
		Meaning	The schedule type could not be set.
		Cause	The schedule setting is wrong.
		Correction	Check that BUSCS1=OTHER is set under Schedule in the /etc/FgwQnx/FgwQnx.ini file.
0015	ERROR	**qnx_name_attach (receiver) Failed.**	
		Meaning	The process could not be registered.
		Cause	The process name could already be in use.
		Correction	Check the setting.
0016	ERROR	**qnx_name_attach (sender) Failed.**	
		Meaning	The process could not be registered.
		Cause	The process name could already be in use.
		Correction	Check the setting.
0017	ERROR	**Can't execute Driver process =** %s.	
		Meaning	The driver process could not start.
		Cause	Same as above.
		Correction	Check the setting.
0018	ERROR	**Can't fork process.**	
		Meaning	The process could not be registered.
		Cause	The resource may be insufficient.
		Correction	Check the user application.
0019	WARNING	**Get Kill Signal.**	
		Meaning	An end signal was received.
		Cause	The program was stopped by another process.
		Correction	Check the setting.
0020	WARNING	**Routing Table Error.**	
		Meaning	The routing table setting is wrong.
		Cause	Same as above.
		Correction	Check the setting.

ID	Level	syslog message		
0021	WARNING	**Illegal response received.**		
			Meaning	The wrong response was received.
			Cause	Same as above.
			Correction	Check the setting.
0022	WARNING	**Setted Node doesn't exist in my network.**		
			Meaning	The specified node did not exist in the network.
			Cause	Same as above.
			Correction	Check the node address of the destination.
0031	ERROR	**EventMemory buffered failure [**%s**]**		
			Meaning	The event memory (%s) for the specified size could not be secured.
			Cause	The transfer size of FgwQnxBUSCS1Map.ini is too large.
			Correction	Change the transfer size.
0032	ERROR	**Cyclic timer attach failure**		
			Meaning	The cyclic timer could not be attached.
			Cause	The timer is used by another program.
			Correction	Check the user application.
0033	ERROR	**Cyclic timer creat failure**		
			Meaning	The cyclic timer could not be created.
			Cause	The timer is used by another program.
			Correction	Check the user application.
0034	ERROR	**Refresh timer attach failure**		
			Meaning	The refresh timer could not be attached.
			Cause	The timer is used by another program.
			Correction	Check the user application.
0035	ERROR	**Refresh timer creat failure**		
			Meaning	The refresh timer could not be created.
			Cause	The timer is used by another program.
			Correction	Check the user application.
0036	ERROR	**Irq proxy attach failure**		
			Meaning	The interrupt proxy could not be attached.
			Cause	The proxy is used by another application.
			Correction	Check the user application.
0037	ERROR	**Irq handler attach failure**		
			Meaning	The interrupt proxy could not be attached.
			Cause	The proxy is used by another application.
			Correction	Check the user application.
0038	ERROR	**Board initial : UNR2 failure [0x** %x**]**		
			Meaning	The initialization of the CS1 bus failed because the Unit number is already in use.
			Cause	The Unit number is already used by another CPU BUS Unit.
			Correction	Change the rotary switch setting. If the error occurs again, replace the Board.
0039	ERROR	**Board initial:UNR2 recognition failure**		
			Meaning	The Unit was recognized as a Special I/O Unit.
			Cause	The hardware has an error.
			Correction	Change or check the cable.
0040	ERROR	**Board initial:Memory test error [0x** %x**]**		
			Meaning	A shared memory check error resulted.
			Cause	The hardware has an error.
			Correction	_
0041	ERROR	**Board initial:Memory test error [0x** %x**]**		
			Meaning	A shared memory check error resulted.
			Cause	The hardware has an error.
			Correction	_

ID	Level	syslog message		
0042	ERROR	**Board initial:Cyclic timeout**		
			Meaning	An initialization time-out error resulted.
			Cause	The access right has not been released by another CPU Bus Unit.
			Correction	Check the operation with the other CPU Bus Units disconnected from the network.
0043	ERROR	**Board initial:IO table error**		
			Meaning	The I/O tables were not registered.
			Cause	Same as above.
			Correction	Create the I/O tables.
0044	WARNING	**Board initial:Clock initial failure [**%d**]**		
			Meaning	The clock initialization failed.
			Cause	The CS1's built-in clock is wrong.
			Correction	Set the correct time.
0045	WARNING	**Board initial : Route table read FINS failure 0 [** %x**][** %x**]**		
			Meaning	The routing tables could not be read.
			Cause	The CS1 has no routing tables.
			Correction	Set the routing tables.
0046	WARNING	**Board initial: Route table my networks over 16 [**%d**]**		
			Meaning	The number of local networks was 17 or over.
			Cause	The CS1's routing tables are wrong.
			Correction	Set the correct routing tables.
0047	WARNING	**Board initial: Route table relay networks over 20 [**%d**]**		
			Meaning	The number of relay networks was 21 or over.
			Cause	The CS1's routing tables are wrong.
			Correction	Set the correct routing tables.
0048	WARNING	**Board initial: Route table my net is 0 but relay net is [**%d**]**		
			Meaning	The number of local networks is 0.
			Cause	The CS1's routing tables are wrong.
			Correction	Set the correct routing tables.
0049	WARNING	**Board initial: Route table no my net or too many my nets [**%d**]**		
			Meaning	More than one local network was registered.
			Cause	The CS1's routing tables are wrong.
			Correction	Set the correct routing tables.
0050	WARNING	**Board initial: Route table my Unit is in hub net**		
			Meaning	The local Unit is in a hub network.
			Cause	The CS1's routing tables are wrong.
			Correction	Set the correct routing tables.
0051	WARNING	**Cyclic write parameter error [0x**%x0x%x**]**		
			Meaning	The cyclic write parameter is wrong.
			Cause	The map file parameter has an error.
			Correction	Check the CS1's offset and be sure the mapping settings are correct.
0052	WARNING	**Cyclic read parameter error [0x**%x0x%x**]**		
			Meaning	The cyclic read parameter is wrong.
			Cause	The map file parameter has an error.
			Correction	Check the CS1's address and be sure the mapping settings are correct.
0053	WARNING	**Fins header error (receive response from Net to UNIT)**		
			Meaning	The FINS response received was addressed to the local unit.
			Cause	The FINS response was illegal.
			Correction	Discarded (no problem.)
0054	WARNING	**Fins route failure (from PLC)**		
			Meaning	The CS1 Unit has a routing error.
			Cause	A routing error occurred in the CS1 PLC.
			Correction	Read the error with FINS2102, check the error log, and set the routing tables correctly.

ID	Level	syslog message		
0055	WARNING	**Fins header error (receive response from PLC to UNIT**		
			Meaning	The response received was already routed.
			Cause	The FINS response was illegal.
			Correction	Discarded (no problem.)
0056	WARNING	**Illegal Fins destination NodeID**		
			Meaning	The destination node was not found.
			Cause	The BUSCS1's node does not exist.
			Correction	Check the node ID.
0057	ERROR	**EEPROM write(profile) failure**		
			Meaning	An EEPROM write failure occurred.
			Cause	The hardware has an error.
			Correction	
0058	WARNING	**Illegal mode. Can't write profile**		
			Meaning	The mode is not profile write mode.
			Cause	The mode setting was illegal.
			Correction	The user cannot overwrite the profile.
0059	ERROR	**EEPROM write(errlog) failure**		
			Meaning	An EEPROM write failure occurred.
			Cause	The hardware has an error.
			Correction	
0060	ERROR	**EEPROM write(errlog read) failure**		
			Meaning	An EEPROM write failure occurred.
			Cause	The hardware has an error.
			Correction	
0061	WARNING	**Map file open failure** [%s]		
			Meaning	The map file could not be opened.
			Cause	FgwQnxBUSCS1Map.ini does not exist.
			Correction	Clear all mapping settings and create FgwQnxBUSCS1Map.ini.
0062	WARNING	**Map file read failure** [%s]		
			Meaning	A map file format error occurred.
			Cause	The map file format is illegal.
			Correction	Clear all mapping settings and create FgwQnxBUSCS1Map.ini.
0063	WARNING	**Map:myline error** [%d] **(set 1 to 128)**		
			Meaning	The first parameter is not within range.
			Cause	The range is wrong.
			Correction	Clear all mapping settings and create FgwQnxBUSCS1Map.ini.
0064	WARNING	**Illegal parameter: No available lines**		
			Meaning	The map file has no valid lines.
			Cause	There is no valid I/O communications setting.
			Correction	Set the parameter range correctly if mapping is required.
0065	ERROR	**Illegal parameter:MyLine** [%d] **(set 1 to 128)**		
			Meaning	The parameter MyLine is not within range.
			Cause	The range is wrong.
			Correction	Clear all mapping settings and create FgwQnxBUSCS1Map.ini.
0066	ERROR	**Shm open error** [%d]		
			Meaning	The shared memory is not available.
			Cause	The shared memory is used up by another program.
			Correction	Check the user application.
0067	ERROR	**mmap failure** [%d]		
			Meaning	The shared memory is not available.
			Cause	The shared memory is used up by another program.
			Correction	Check the user application.

ID	Level	syslog message	
0068	WARNING	**Cyclic parameter size sum overrange.**	
		Meaning	The number of transfer words exceeded 7,784.
		Cause	The range is wrong.
		Correction	Check the mapping parameter range.
0069	WARNING	**No Route table in CS1**	
		Meaning	The CS1 Unit has no routing tables.
		Cause	Same as above.
		Correction	Set the routing tables.
0070	WARNING	**Response size over at [**%d**]**	
		Meaning	The CS1 bus FINS size was exceeded.
		Cause	The FINS size exceeded 2,000 bytes.
		Correction	The packet will be discarded.
0070	WARNING	**Response size over at [**%d**]**	
		Meaning	The CS1 bus FINS size was exceeded.
		Cause	The FINS size exceeded 2,000 bytes.
		Correction	The packet will be discarded.
0071	ERROR	**Illegal Parameter:Ticksize [**%d**](set under 10000)**	
		Meaning	The FgwQnx.ini's Ticksize exceeded 10,000.
		Cause	The range is wrong.
		Correction	Check the range for the TickSize entry under TickSize in the /etc/FgwQnx/FgwQnx.ini file.
0072	ERROR	**Illegal Parameter: ONC UnitID [**%d**](set between 1 and 240)**	
		Meaning	The BUSCS1 Unit number (indicated by %d in the syslog message) is not within range.
		Cause	Same as above.
		Correction	Set the BUSCS1 entry under Unit ID in the /etc/FgwQnx/FgwQnx.ini to between 16 and 31.
0073	ERROR	**Illegal Parameter: ONC NodeID [**%d**](set between 1 and 254)**	
		Meaning	The ONC node number (indicated by %d in the syslog message) is not within range.
		Cause	Same as above.
		Correction	Use the Setting Tool to set the ONC node number correctly.
0074	ERROR	**Illegal Parameter: CS1 NodeID [**%d**](set between 1 and 254)**	
		Meaning	The CS1 node number (indicated by %d in the syslog message) is already in use or not within range.
		Cause	The range is wrong.
		Correction	Use the Setting Tool to set the CS1 node number correctly.
0075	ERROR	**Illegal Parameter: IRQ [**%d**](set 12 or 15)**	
		Meaning	The IRQ entry under BUSCS1 in the /etc/FgwQnx/FgwQnxBUSCS1.ini file (indicated by %d in the syslog message) is not within range.
		Cause	Same as above.
		Correction	Set the IRQ entry under BUSCS1 in the /etc/FgwQnx/FgwQnxBUSCS1.ini file to between 12 and 15.
0076	ERROR	**Illegal Parameter: Memaddr [0x**%x**]**	
		Meaning	The memory address under BUSCS1 in the /etc/FgwQnx/FgwQnxBUSCS1.ini file is not within range.
		Cause	Same as above.
		Correction	Return to the default Controller settings. (Turn ON pin 4 on SW2.)
0077	ERROR	**Illegal Parameter: IOaddr [0x**%x**]**	
		Meaning	The I/O address under BUSCS1 in the /etc/FgwQnx/FgwQnxBUSCS1.ini file is not within range.
		Cause	Same as above.
		Correction	Return to the default Controller settings. (Turn ON pin 4 on SW2.)
0078	WARNING	**Illegal Parameter: RefreshMethod [**%d**](set 0 or 1)**	
		Meaning	The parameter refresh method under BUSCS1 in the /etc/FgwQnx/FgwQnxBUSCS1.ini file is not within range.
		Cause	Same as above.
		Correction	Set the parameter refresh method under BUSCS1 in the /etc/FgwQnx/FgwQnxBUSCS1.ini file to 0 or 1.

ID	Level	syslog message		
0079	WARNING	**Illegal Parameter: RefreshTimer [%d](set 1 to 65535)**		
			Meaning	The refresh cycle is not within range.
			Cause	Same as above.
			Correction	Use the Setting Tool to set the refresh cycle to between 1 and 9,999.
0080	WARNING	**Illegal Parameter: ResetMethod [%d](set 0 or 1)**		
			Meaning	The reset method is wrong.
			Cause	Same as above.
			Correction	Use the Setting Tool to set the reset correctly.
0081	WARNING	**Illegal Parameter: SyncClock [%d](set 0 or 1)**		
			Meaning	The sync clock setting is wrong.
			Cause	Same as above.
			Correction	Use the Setting Tool to set the sync clock correctly.
0082	ERROR	**Set Priority failure**		
			Meaning	A priority error occurred.
			Cause	The range is wrong.
			Correction	Check that BUSCS1=23 is set under Priority in the /etc/FgwQnx/FgwQnx.ini file.
0083	ERROR	**Set Schedule type failure**		
			Meaning	A scheduling error occurred.
			Cause	The range is wrong.
			Correction	Check that BUSCS1=OTHER is set under Schedule in the /etc/FgwQnx/FgwQnx.ini file.
0084	ERROR	**Hardware initial failure**		
			Meaning	The CS1 bus was not initialized.
			Cause	Same as above.
			Correction	Check other error log items.
0085	ERROR	**Cyclic interrupt timed out**		
			Meaning	A cyclic interrupt time-out resulted.
			Cause	The access right has not been released by another CPU Bus Unit.
			Correction	Check the operation with other CPU Bus Units disconnected from the network.
0086	ERROR	**Cable connection error**		
			Meaning	The bus connection cable was disconnected.
			Cause	Same as above.
			Correction	Connect the bus connection cable correctly and restart the Unit and the CS1.
0087	ERROR	**PLC power failure**		
			Meaning	The CS1 had a power failure.
			Cause	Same as above.
			Correction	Restore the power and restart the Unit and the CS1.
0088	ERROR	**PLC WDT error**		
			Meaning	The CS1 had a watchdog timeout error.
			Cause	Same as above.
			Correction	Eliminate the cause of the problem and restart the Unit and the CS1.
0089	ERROR	**PLC Bus error**		
			Meaning	The CS1 bus error resulted.
			Cause	Same as above.
			Correction	Eliminate the cause of the problem and restart the Unit and the CS1.
0090	WARNING	**Cyclic interrupt is back**		
			Meaning	The cyclic access right returned.
			Cause	Same as above.
			Correction	The error was restored.
0091	WARNING	**Illegal irq status [0x%x]**		
			Meaning	An illegal interrupt status resulted.
			Cause	An illegal interrupt status resulted due to noise.
			Correction	The interrupt status will not be processed.

ID	Level	syslog message		
0092	WARNING	**Illegal message** [%d]		
			Meaning	An illegal message was received.
			Cause	A meaningless message was received from another process.
			Correction	The message will be discarded.
0099	ERROR	**ACC2 failure**		
			Meaning	The cyclic access right was not acquired.
			Cause	The access right has not been released by another CPU Bus Unit.
			Correction	Check the operation with other CPU Bus Units disconnected from the network.
0100	WARNING	**EventMemory initial failure** [%s]		
			Meaning	The event memory indicated by %s in the syslog message could not be opened.
			Cause	The event memory is illegal.
			Correction	Check the event memory name.
0103	WARNING	**CS1 memory** [%s] **is not available**		
			Meaning	The CS1 memory name is illegal.
			Cause	Same as above.
			Correction	Check the CS1 memory name.
0104	WARNING	**Can't get address line** [%d]		
			Meaning	The start address of the CS1 memory was not acquired.
			Cause	FgwQnxBUSCS1Map.ini is illegal.
			Correction	Clear all mapping settings and create FgwQnxBUSCS1Map.ini.
0105	WARNING	**Illegal Network CS1**[%d] **and Fgw**[%d]		
			Meaning	The CS1 routing tables and the Open Network Controller have different network numbers.
			Cause	The CS1 routing table and ONC BUSCS1 Unit network numbers are different.
			Correction	Use the same network number.
0106	WARNING	**Board initial: Route table Fins Timeout**		
			Meaning	A routing table read time-out error resulted.
			Cause	The FINS response did not return.
			Correction	Check the CS1's routing tables.

RUT_UNIT (FGW-RUT)

Note The star (*) at the start of the syslog message (RUT*) is replaced by a value to indicate RUT0 to RUT3.

ID	Level	syslog message		
0001	ERROR	**[RUT*] error: Unit couldn't start.**(%s)		
			Meaning	The argument that starts the process is wrong.
			Cause	The settings file may be corrupted.
			Correction	Return to the default Controller settings (Turn ON pin 4 on SW2.)
0002	ERROR	**[RUT*] error: Unit couldn't start.**		
			Meaning	And error occurred during process startup.
			Cause	There may be insufficient resources.
			Correction	Restart the Controller.
0003	ERROR	**[RUT*] error: Spawn failed.**		
			Meaning	Driver process startup error.
			Cause	The driver may already be started.
			Correction	Restart the Controller.
0004	ERROR	**[RUT*] error: signal received.**		
			Meaning	A kill signal was received.
			Cause	The process was stopped by another error or an error occurred while repeating.
			Correction	If the message is output other than for a repeat, correct the errors for other error IDs.

ID	Level	syslog message		
0005	ERROR	**[RUT*] error: my NodeID.(**%s**)**		
			Meaning	The RUT* node number (indicated by %s in the syslog message) is wrong.
			Cause	Same as above.
			Correction	Use the Setting Tool to set the correct RUT* node number.
0006	ERROR	**[RUT*] error: my UnitID.(**%s**)**		
			Meaning	The RUT* Unit number (indicated by %s in the syslog message) is wrong.
			Cause	Same as above.
			Correction	Set the RUT* entry under Unit ID in the /etc/FgwQnx/FgwQnx.ini file to between 16 and 31.
0007	ERROR	**[RUT*] error: FgwQnxRut.ini doesn't exist or doesn't open.**		
			Meaning	/etc/FgwQnx/FgwQnxRut.ini cannot be opened.
			Cause	The settings file cannot be found or the file could not be opened.
			Correction	Return to the default Controller settings. (Turn ON pin 4 on SW2.)
0008	ERROR	**[RUT*] error: COM configutration error.**		
			Meaning	The serial settings are wrong.
			Cause	The settings file may be corrupted.
			Correction	Return to the default Controller settings. (Turn ON pin 4 on SW2.)
0009	WARNING	**[RUT*] warning: receive message from unknown process.**		
			Meaning	A message was received from another process.
			Cause	_
			Correction	No corrective measure is required.
0010	WARNING	**[RUT*] warning: receive different command frame.**		
			Meaning	The FINS command is wrong.
			Cause	Same as above.
			Correction	Check the FINS command.
0011	WARNING	**[RUT*] warning: receive data overflow.**		
			Meaning	The receive data has overflowed.
			Cause	More than 2,016 data items were received.
			Correction	Check the receive data size.

RCOM_UNIT (FGW-RCOM0 to FGW-RCOM15)

Note The asterisk in RCOM* at the start of the syslog messages is replaced by a value to represent RCOM0 to RCOM15.

ID	Level	syslog message		
0002	ERROR	**[RCOM*] error : Argument mismatch. (argc =** %d**, argv[0] =** %s**)**		
			Meaning	The number of arguments is not valid.
			Cause	As above.
			Correction 1	Do not start only RCOM*.
			Correction 2	Check the Command Line under RCOM* in the /etc/FgwQnx/FgwQnx.ini file for mistakes.
0003	ERROR	**[RCOM*] error : Name is already used.**		
			Meaning	The process has already been started.
			Cause	A process of the same name has already been executed.
			Correction	Make sure the same network provider is not set more than once.
0005	ERROR	**[RCOM*] error : COM configuration error (ret =** %d**)**		
			Meaning	RCOM settings are not valid. The invalid settings are indicated by %d in the syslog message. -6: The data bit length setting for the corresponding RCOM Unit is not valid. -7: The stop bit length setting for the corresponding RCOM Unit is not valid. -8: The parity setting for the corresponding RCOM Unit is not valid.
			Cause	As above.
			Correction	Correct the setting based on the return value.

ID	Level	syslog message		
0012	ERROR	**[RCOM*] error : my UnitID (%d)**		
			Meaning	The RCOM* unit number setting (indicated by %d in the syslog message) is not valid.
			Cause	As above.
			Correction	Correct the RCOM* setting under UnitID in the /etc/FgwQnx/FgwQnx.ini file.
0013	ERROR	**[RCOM*] error : my NodeID (%d)**		
			Meaning	The RCOM* node address setting (indicated by %d in the syslog message) is not valid.
			Cause	As above.
			Correction	Use the setting tool to set the RCOM* node address to between 1 and 253.
0016	ERROR	**[RCOM*] error : No node information data.**		
			Meaning	/etc/FgwQnx/ RCOMNetTbl.ini cannot be found or the node number is not set.
			Cause	As above.
			Correction	Check that the RCOM NetTbl is set correctly.
0017	ERROR	**[RCOM*] error : swaycnvt.dat don't exist, or don't open.**		
			Meaning	/etc/FgwQnx/swaycnvt.dat cannot be found or cannot be opened.
			Cause	As above.
			Correction	Check /etc/FgwQnx/swaycnvt.dat.
0018	ERROR	**[RCOM*] error : Can't exec Driver file [%s]**		
			Meaning	/usr/FgwQnx/bin/ RCOMdrv cannot be found.
			Cause	As above.
			Correction	Check RCOMdrv to be sure it is in the task list for Web Service.
0019	ERROR	**[RCOM*] error : Fins_new failed. (%s)**		
			Meaning	The network provider could not be registered.
			Cause	The network number or unit address is already in use.
			Correction	Use the setting tool to check that the network number is used only once. Also, check that the RCOM* unit address under UnitID in the /etc/FgwQnx/FgwQnx.ini file is not used by another unit.
0022	WARNING	**[RCOM*] warning : TimeOut value (%s)**		
			Meaning	The reception timeout time setting (indicated by %s in the syslog message) is not valid.
			Cause	As above.
			Correction	Use the setting tool to correct the reception time out.
0023	WARNING	**[RCOM*] warning : Retry count (%s)**		
			Meaning	The number of retries setting (indicated by %s in the syslog message) is not valid.
			Cause	As above.
			Correction	Use the setting tool to correct the number of retries setting.
0024	WARNING	**[RCOM*] warning : receive timeout**		
			Meaning	A reception timed out.
			Cause 1	Communications could not be established.
			Correction 1	Check the communications settings.
			Cause 2	The connected device did not respond.
			Correction 2	Check the connected device to be sure it can respond.
0026	WARNING	**[RCOM*] warning : receive signal**		
			Meaning	The end signal was received.
			Cause	The program was ended by another error factor.
			Correction	Correct other errors before and after this message, and restart the Open Network Controller.
0027	WARNING	**RCOM*] warning : No node infomation.**		
			Meaning	Corresponding node information is not set in /etc/FgwQnx/RCOM NetTbl.ini.
			Cause	As above.
			Correction	Check the contents of the RCOMNetTbl.
0028	WARNING	**[RCOM*] warning : differnt protocol [%s]**		
			Meaning	The protocol set in the RCOMNetTbl and the protocol for the device are different.
			Cause	As above.
			Correction	Use the same protocol as the communications partner.

ID	Level	syslog message	
0030	WARNING	**[RCOM*] warning : receive differnt response frame.**	
		Meaning	An illegal response frame was received.
		Cause	As above.
		Correction	Check the timeout time setting.
0031	WARNING	**[RCOM*] warning : toFinsNode address (line:**%d**)**	
		Meaning	An illegal node address was set to the line (counted from 0), indicated by %d in the syslog message, under RCOM* in the /etc/FgwQnx/RCOMNetTbl.ini file.
		Cause	As above.
		Correction	Check the contents of the corresponding line in the RCOMNetTbl.
0032	WARNING	**[RCOM*] warning : SpecSize don't convert to numeric (line:**%d**)**	
		Meaning	An illegal node address was set to the line (counted from 0) indicated by %d in the syslog message, under HLK* in the /etc/FgwQnx/RCOMNetTbl.ini file. When the connected device is a PLC, CompoWay network, or ID Controller, the setting is the Host Link unit number, and for Power Monitors it is the station number.
		Cause	As above.
		Correction	Check the contents of the corresponding line in the RCOMNetTbl.
0033	WARNING	**[FGW-RCOM*] warning : Protocol type don't defined. (line:**%d**)**	
		Meaning	An illegal protocol was set to the line (counted from 0), indicated by %d in the syslog message, under RCOM* in the /etc/FgwQnx/RCOMNetTbl.ini file.
		Cause	As above.
		Correction	Use the setting tool to set the correct protocol to the RCOMNetTbl in the corresponding RCOM Unit.
0034	WARNING	**[FGW-RCOM*] warning : FinsNode address already used. (NodeID =** %d**)**	
		Meaning	The same node number (indicated by %d in the syslog message) is set twice under RCOM* in the /etc/FgwQnx/RCOMNetTbl.ini file.
		Cause	As above.
		Correction	Use the setting tool to change the duplicated node number in the RCOMNetTbl in the corresponding RCOM Unit.
0063	WARNING	**[FGW-RCOM*] warning : Retry count over**	
		Meaning	The number of retries setting has been exceeded.
		Cause 1	Communications could not be established.
		Correction 1	Check communications settings. Check to see if an 05 05 Connect Error has occurred.
		Cause 2	The connected device did not respond.
		Correction 2	Check the connected device to be sure it can respond.
0064	ERROR	**[FGW-RCOM*] error : Fins_changeNetworkProvider failed.**	
		Meaning	The network provider could not be registered.
		Cause	The network number or unit address is already in use.
		Correction	Use the setting tool to check that the network number is used only once. Also, check that the RCOM* unit address under UnitID in the /etc/FgwQnx/FgwQnx.ini file is not used by another unit.
0065	ERROR	**[FGW-RCOM*] error : Fgw_setPriority failed.**	
		Meaning	Priority could not be set.
		Cause	The priority setting is not valid.
		Correction 1	Check to be sure RCOM*=23 is set under Priority in the /etc/FgwQnx/FgwQnx.ini file.
		Correction 2	Log in as root.
0066	ERROR	**[FGW-RCOM*] error : Fgw_setScheduleType failed.**	
		Meaning	The schedule could not be set.
		Cause	The schedule setting is not valid.
		Correction	Check to be sure RCOM*=OTHER is set under Schedule in the /etc/FgwQnx/FgwQnx.ini file.
0500	ERROR	**Malloc error.**	
		Meaning	An error occurred in internal processing.
		Cause	An Open Network Controller operating error may have occurred.
		Correction	Restart the Open Network Controller.

ID	Level	syslog message		
0501	ERROR	**Shm_open error.**		
			Meaning	An error occurred in internal processing.
			Cause	An Open Network Controller operating error may have occurred.
			Correction	Restart the Open Network Controller.
0502	ERROR	**Make socket error.**		
			Meaning	An error occurred in internal processing.
			Cause	An Open Network Controller operating error may have occurred.
			Correction	Restart the Open Network Controller.
0503	ERROR	**Read socket error.**		
			Meaning	An error occurred in internal processing.
			Cause	An Open Network Controller operating error may have occurred.
			Correction	Restart the Open Network Controller.
0504	ERROR	**Write socket error.**		
			Meaning	An error occurred in internal processing.
			Cause	An Open Network Controller operating error may have occurred.
			Correction	Restart the Open Network Controller.
0505	ERROR	**Connect error.**		
			Meaning	Failed to create TCP connection to SerialGateBox.
			Cause	The Ethernet cable is disconnected, another COM is already connected, or the remote node does not exist.
			Correction	The internal connection will be retried. If the error cannot be cleared even after all conceivable problems have been corrected, correct all errors and restart the Open Network Controller.
0506	ERROR	**Make pipe error.**		
			Meaning	An error occurred in internal processing.
			Cause	An Open Network Controller operating error may have occurred.
			Correction	Restart the Open Network Controller.
0507	ERROR	**Read pipe error.**		
			Meaning	An error occurred in internal processing.
			Cause	An Open Network Controller operating error may have occurred.
			Correction	Restart the Open Network Controller.
0508	ERROR	**Receive illegal message from SGB.**		
			Meaning	A protocol other than RCOM was received.
			Cause	The connected node may not be RCOM.
			Correction	Check to be sure RCOM is running on SerialGateBox.
0509	ERROR	**Fork error.**		
			Meaning	An error occurred in internal processing.
			Cause	An Open Network Controller operating error may have occurred.
			Correction	Restart the Open Network Controller.
0510	ERROR	**Kill error.**		
			Meaning	An error occurred in internal processing.
			Cause	An Open Network Controller operating error may have occurred.
			Correction	Restart the Open Network Controller.

FLK_UNIT (FGW-FLK)

Note The asterisk in FGW-FLK* at the start of the syslog messages is replaced by a value to represent FLK0 or FLK1.

ID	Level	syslog message		
0003	ERROR	**[FGW-FLK*] error : Argument mismatch. (argc =** %d**, argv =** %s**)**		
			Meaning	The startup option is not normal.
			Cause	The setup file may be corrupted.
			Correction	Restore the Open Network Controller settings (turn ON pin 4 of SW2.)

ID	Level	syslog message	
0004	ERROR	**[FGW-FLK*] error : GetProfile failed.**	
		Meaning	There is an error in the setup file.
		Cause	The error may be caused by another error.
		Correction	Correct the other errors.
0005	ERROR	**[FGW-FLK*] error : Initialize failed.**	
		Meaning	An error occurred in initialization.
		Cause	The error may be caused by another error.
		Correction	Correct the other errors.
0006	ERROR	**[FGW-FLK*] error : Fgw_setPriority failed.**	
		Meaning	Priority cannot be set.
		Cause	The priority settings are not valid.
		Correction	Check to be sure FLK*=23 is set under Priority in the /etc/FgwQnxFgwQnx.ini file.
0007	ERROR	**[FGW-FLK*] error : Fgw_setScheduleType failed.**	
		Meaning	The scheduler cannot be set.
		Cause	The schedule settings are not valid.
		Correction	Check to be sure FLK*=OTHER is set under Schedule in the /etc/FgwQnxFgwQnx.ini file.
0008	ERROR	**[FGW-FLK*] error : EM Open Error (**%s**)**	
		Meaning	Failed to open event memory.
		Cause	There may be insufficient resources.
		Correction	Restart the Open Network Controller.
0009	ERROR	**[FGW-FLK*] error : Fins_newReservedUnit Error**	
		Meaning	The network provider could not be registered.
		Cause	The unit address is already in use.
		Correction	Check for duplication of the FLK* unit number under UnitID in the /etc/FgwQnx/FgwQnx.ini file.
0010	ERROR	**[FGW-FLK*] error : Timer Proxy Make Fail**	
		Meaning	A timer proxy error occurred.
		Cause	There may be insufficient resources.
		Correction	Restart the Open Network Controller.
0011	ERROR	**[FGW-FLK*] error : Timer Create Fail**	
		Meaning	An error occurred when creating the timer.
		Cause	There may be insufficient resources.
		Correction	Restart the Open Network Controller.
0012	ERROR	**[FGW-FLK*] error : Mapping Over (Max=128)**	
		Meaning	There are too many FinsLink table settings.
		Cause	There are more than 128 settings.
		Correction	Reduce the number of settings to 128 or less.
0013	WARNING	**[FGW-FLK*] warning : Illegal Evm Type =** %x **count =** %d	
		Meaning	The event memory name is not valid. (%x in Evm Type = %x in the syslog message indicates the code for the current event memory name. When an error occurs, %x will be a value other 80 (CIO) or 82 (DM). %d in count = %d indicates the table number in the FinsLink table where the error was detected. (Note: The line number for the first FinsLink setting is 0.))
		Cause	An event memory name other than CIO or DM is set.
		Correction	Check the area name in the Open Network Controller.
0023	ERROR	**[FGW-FLK*] error : Fins Parameter Error (line =** %d**, parameter =** %s**)**	
		Meaning	The parameter settings are not correct. (Line = % d in the syslog message indicates the line number in the FinsLink settings file (FgwQnxFlk0.ini or FgwQnxFlk1.ini) where the illegal parameter was detected. (Note: The first line in the file is 0.) The name of the illegal parameter is indicated by parameter = %s.)
		Cause	The parameter settings are not valid.
		Correction	Check the settings.

ID	Level	syslog message		
0024	ERROR	**[FGW-FLK*] error :** %s **data Fins Response Error** %x %x **count =** %d		
			Meaning	FINS response error. (Count = %d in the syslog message indicates the line number in the FinsLink settings that caused the error. (Note: The first line in the FinsLink settings is 0.) An error response (an end code other than 0000) was received from the remote communications device set in this line. %x%x in the syslog message indicated the received end code.)
			Cause	There is an error in the FINS response sent from the remote node.
			Correction	Correct the error in the remote node.
0025	ERROR	**[FGW-FLK*] error :** %s **data Error** %d **count =** %d		
			Meaning	Failed to send a FINS message. (Count = %d in the syslog message indicates the line number in the FinsLink settings that caused the error). (Note: The first line in the FinsLink settings is 0.) A timeout occurred when sending a FINS message to the remote communications device set in this line.)
			Cause	A timeout occurred while sending a FINS message.
			Correction	Check the status of the remote node.
0026	ERROR	**[FGW-FLK*] error : Geta Data Fins Receive timeout count =** %d		
			Meaning	A FINS response timeout occurred. (Count = %d in the syslog message indicates the line number in the FinsLink settings that caused the error. (Note: The first line in the FinsLink settings is 0.) A timeout occurred when receiving a FINS response from the remote communications device set in this line.)
			Cause	A FINS response timeout occurred.
			Correction	Check the status of the remote node.

Memory Card (CARD)

ID	Level	syslog message		
0102	ERROR	**Fsys.eide failed :** %s		
			Meaning	Failed to start Memory Card driver.
			Cause	The mounted card may not be a Memory Card.
			Correction	Check that the Memory Card is mounted correctly.
0103	ERROR	**mount failed :** %s		
			Meaning	Failed to mount the Memory Card.
			Cause	The Memory Card may be corrupted.
			Correction	Format the Memory Card into the QNX format.
0104	ERROR	**Fatfsys failed :** %s		
			Meaning	Failed to create DOS file system.
			Cause	As above.
			Correction	Format the Memory Card into the DOS format.
0105	ERROR	**mount failed :** %s		
			Meaning	Failed to mounted the Memory Card.
			Cause	The Memory Card may not be formatted correctly.
			Correction	Format the Memory Card into the QNX format.
0106	ERROR	**no support device.**		
			Meaning	The Memory Card that is currently inserted is not supported.
			Cause	An unsupported Memory Card is inserted.
			Correction	Insert a Memory Card that is supported.
0201	ERROR	**rm failed.[**%s**]**		
			Meaning	Failed to unmount memory.
			Cause	The error is caused by another error.
			Correction	Correct the other error.
0202	ERROR	**umount failed :** %s		
			Meaning	Failed to unmount memory.
			Cause	The error is caused by another error.
			Correction	Correct the other error.
0203	ERROR	**rm failed :** %s		
			Meaning	Failed to delete device file.
			Cause	The error is caused by another error.
			Correction	Correct the other error.

PR (Other Processes)

ID	Level	syslog message		
0101	ERROR	**Argment count mismatch.[**%d**]**		
			Meaning	The startup option is not valid.
			Cause	_
			Correction	Restart the Open Network Controller.
0102	ERROR	**Argment value mismatch.[**%d**]**		
			Meaning	The startup options are not valid.
			Cause	_
			Correction	Restart the Open Network Controller.
0103	ERROR	**spawn failture.[FgwLibMgr]**		
			Meaning	Failed to start FinsGateway.
			Cause	The setup file may be corrupted.
			Correction	Restore the Open Network Controller settings. (Turn ON pin 4 of SW2.)
0104	ERROR	**spawn failture.[slay FgwLibMgr]**		
			Meaning	Failed to end FinsGateway.
			Cause	
			Correction	No corrections are required.
0105	ERROR	**Sram Data Error**		
			Meaning	A SRAM data error occurred.
			Cause	A low battery caused the data to be corrupted.
			Correction	Replace the battery and initialize the SRAM according to page 114.
0106	ERROR	**No Disk Space (**%s**) Free Size=**%**.0f**		
			Meaning	There is not sufficient disk space (indicated by %s in the syslog message)
			Cause	Data is accumulating in the built-in disk (/) or the Memory Card (/kd).
			Correction	End processes saving files and free disk space after backing up required files.
0201	ERROR	**spawn failed.[ONC_ERR_LED7]**		
			Meaning	Failed to start process.
			Cause	There may be insufficient resources.
			Correction	Restart the Open Network Controller.
0202	ERROR	**InitFile Failed.**		
			Meaning	Failed to set defaults.
			Cause	The disk may be full.
			Correction	Delete unnecessary files to free disk space.
0203	ERROR	**Dont Find IP Address.**		
			Meaning	An error occurred in obtaining the IP address.
			Cause	A process may be already started for the same IP address or the hosts file may be corrupted.
			Correction	Check for IP addresses used more than once and check the settings in the hosts file.
0401	ERROR	**spawnvp failed.[tinit]**		
			Meaning	Failed to initialize terminal.
			Cause	The COM1 settings are not valid or another program is using the terminal.
			Correction	Check COM1 settings and check to see if another program is using COM1.
0402	ERROR	**spawnvp failed.[FgwWakeUp]**		
			Meaning	Failed to start process.
			Cause	There may be insufficient resources.
			Correction	Restart the Open Network Controller.
0403	ERROR	**spawnvp failed.[tinit]**		
			Meaning	Failed to initialize terminal.
			Cause	The COM1 settings are not valid or another program is using the terminal.
			Correction	Check COM1 settings and check to see if another program is using COM1.

ID	Level	syslog message		
0501	ERROR	**ONC_ERR_LED7 already exist!**		
			Meaning	The process could not be started.
			Cause	A process of the same name may be already started.
			Correction	Restart the Open Network Controller.
0601	ERROR	**battery low**		
			Meaning	The battery is low.
			Cause	The connector is not connected or the battery charge has been depleted.
			Correction	Connect the battery correctly or replace the battery.
0701	ERROR	**qnx_name_locate failed.[**%m**]**		
			Meaning	An error occurred in obtaining the process ID.
			Cause	The process does not exist.
			Correction	Restart the Open Network Controller.

19-3 DeviceNet Indicator Displays

The following table lists the indictor displays that appear for DeviceNet displays, along with the steps required to correct the error.

19-3-1 MS and NS Indicators

Error	Indicator status		Possible correction
	MS	NS	
RAM error	Lit red.	Not lit.	Replace the Board.
EEPROM error	Lit red.	Not lit.	Replace the Board.
MAC ID duplication	Any (Green)	Lit red.	Check the MAC IDs for other nodes and be sure the same MAC ID is used only once. Restart the Controller after correcting the settings.
BusOFF detected	Any (Green)	Lit red.	Turn OFF the power, check the following, and then try turning the power back ON. Device baud rate settings, cable integrity, cable connections, cable lengths for main and branch lines, terminating resistance settings, and noise.
Network power error	Any (Green)	Not lit.	Turn OFF the power, check the following, and then try turning the power back ON. Network power supply and network cables.
Send timeout	Any (Green)	Not lit.	Turn OFF the power, check the following, and then try turning the power back ON. Cable integrity, cable connections, cable lengths for main and branch lines, terminating resistance settings, and noise.
Slave missing	Any (Green)	Flashing red.	Turn OFF the power, check the following, and then try turning the power back ON. Slave status, cable integrity, cable connections, cable lengths for main and branch lines, terminating resistance settings, and noise.
Slave I/O size mismatch	Any (Green)	Flashing red.	Check all of the slaves and make sure the slave settings in the scan list are correct.
Communications error	Any (Green)	Flashing red.	Turn OFF the power, check the following, and then try turning the power back ON. Device baud rate settings, cable integrity, cable connections, cable lengths for main and branch lines, terminating resistance settings, and noise. If the problem persists even when all of the above are correct, replace the Board (CAN controller error).
Communications stopped	Any (Green)	Any	Turn OFF the power, correct the cause of communications stopping, and then try turning the power back ON.
System error	Lit red.	Not lit.	Replace the Board.

19-3-2 Seven-segment Display

Normally the 7-segment display shows the node address in hexadecimal (00 to 3F). When an error occurs, the error code and the address of the node where the error occurred will be displayed alternately.

The dot indicator on the bottom right of the left digit of the 7-segment display shows whether the registered scan list is enabled or disabled. The dot indicator for the right digit shows whether the slave function is operating or stopped.

Note If pin 2 is turned OFF and pin 3 is turned ON on DIP switch SW2, the 7-segment display will alternately show the DeviceNet error code and the address of the node where the error occurred. Refer to *3-2 DIP Switch Settings* for information on DIP switch settings.

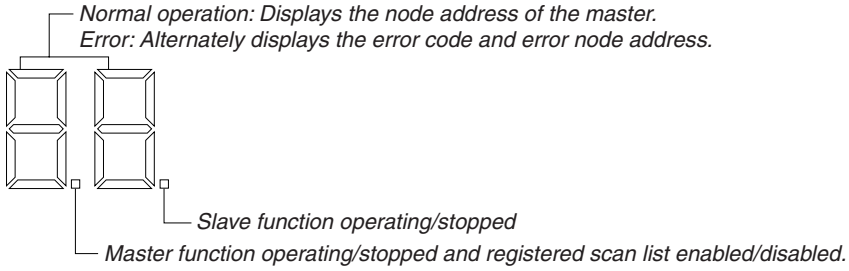

Right and Left Dot Indicators

Dot indicator	Usage	Meaning
Left	Registered scan list enabled/disabled and master function operation	Lit: Master function stopped Flashing: Scan list disabled Not lit: Scan list enabled, master function disabled
Right	Slave function operating/stopped	Lit: Slave function stopped No lit: Slave function operating

Troubleshooting DeviceNet Errors

The displays shown on the 7-segment display for DeviceNet errors and user corrections are listed in the following table.

Indicator status		7-Segment Display (Alternates with node address)	Error	Likely correction
MS	NS			
---	---	A0	Remote I/O communications stopped due to remote I/O communications error	Refer to the *Likely correction* for the following errors. • Remote I/O communications error (error code d9) • Network power supply error (error code E0) • Send timeout (error code E2)
---	---	C0	CPU Unit status error	Restart the Open Network Controller.
---	---	C2	Unit status error	The C2 display will go out automatically in 30 seconds.
---	---	C4	Configuration error	Correct the cause of the error (see error codes d0 to d2), confirm that the error no longer occurs, and then re-register the scan list.
---	---	C5	Setting failure	Check the parameter settings and then restart the Open Network Controller.
---	---	C6	Multiple switches ON	Repeat the software switch operations one at a time.
---	Flashing red	d0	Configuration error: I/O area duplication	Reset the slave node addresses.

Indicator status		7-Segment Display (Alternates with node address)	Error	Likely correction
MS	NS			
---	Flashing red	d1	Configuration error: I/O area out of range	Reset the slave node addresses.
---	Flashing red	d2	Configuration error: Unsupported slave	Use slaves that have I/O sizes of 200 output bytes or 200 input bytes.
---	Flashing red	d5	Verification error: Slave missing	Check the following items. • Are master and slave baud rates the same? • Are cable lengths correct (main and branch)? • Are cables connected and not broken? • Are connectors connected securely? • Is there terminating resistance on both end of the main line? • Is there too much noise?
---	Flashing red	d6	Verification error: Incorrect header	Check the slave and recreate the scan list.
---	Flashing red	d6	Verification error: Incorrect connection path	Check the slave and recreate the scan list.
---	Flashing red	d6	Verification error: Slave I/O size mismatch	Check the slave and recreate the scan list.
---	Flashing red	d6	Verification error: Incorrect device type	Check the slave and recreate the scan list.
---	Flashing red	d6	Verification error: Incorrect product code	Check the slave and recreate the scan list.
---	Flashing red	d6	Verification error: Unsupported connection	Check the slave and recreate the scan list.
---	Flashing red	d9	Remote I/O communications error	Check the following items. • Are master and slave baud rates the same? • Are cable lengths correct (main and branch)? • Are cables connected and not broken? • Are connectors connected securely? • Is there terminating resistance on both end of the main line? • Is there too much noise?
---	Not lit or flashing red (See note.)	E0	Network power supply error	Check the network power supply and the network cables.
---	Not lit or flashing red (See note.)	E2	Send timeout	Check the following items. • Are master and slave baud rates the same? • Are cable lengths correct (main and branch)? • Are cables connected and not broken? • Are connectors connected securely? • Is there terminating resistance on both end of the main line? • Is there too much noise?
Flashing red	---	E6	Message timer list logic error	Re-register the message timer from the Configurator.
Flashing red	---	E7	Slave scan list logic error	Re-register the message timer from the Configurator.
Flashing red	---	E8	Master scan list logic error	Clear then scan list and then recreate it, or reset the master scan list from the Configurator.
Flashing red	---	E9	Memory access error	If this error persists, replace the DeviceNet Board.

Indicator status		7-Segment Display (Alternates with node address)	Error	Likely correction
MS	NS			
---	Lit red	F0	Node address duplication	Check the addresses of other nodes. Reset any that are duplicate and restart the Open Network Controller.
---	Lit red	F1	Busoff detected	Check the following items. • Are master and slave baud rates the same? • Are cable lengths correct (main and branch)? • Are cables connected and not broken? • Are connectors connected securely? • Is there terminating resistance on both end of the main line? • Is there too much noise?
Flashing red	Not lit	H1	Unit number duplication	Set the unit number correctly and restart the Open Network Controller.
Flashing red	Not lit	H2	Open Network Controller fault	If this error persists when the Open Network Controller is restarted, replace Open Network Controller.
Lit red	Not lit	H3	DeviceNet Unit fault	If this error persists, replace the DeviceNet Board.
Flashing red	Not lit	H4	Node address setting error	Set the node addresses correctly and restart the Open Network Controller.
Flashing red	Not lit	H5	Baud rate setting error	Set the baud rate correctly and restart the Open Network Controller.
Flashing red	Not lit	H6	Open Network Controller is faulty	If this error persists when the Open Network Controller is restarted, replace Open Network Controller.
Flashing red	Not lit	H7	I/O tables not registered	---
Flashing red	---	HA	Open Network Controller memory fault	If this error persists when the Open Network Controller is restarted, replace Open Network Controller.
Flashing red	---	Hb	CPU Unit fault	If this error persists when the Open Network Controller is restarted, replace Open Network Controller.
Flashing red	---	HC	Routing table logic error	Restart the Open Network Controller.
Flashing red	---	Hd	I/O refresh error	Check the master or slave scan list and set allocations correctly.
Flashing red	---	HE	Service monitoring error	Check the Open Network Controller operating environment.
Flashing red	---	HF	Watchdog timer error	Restart the Open Network Controller.
---	Flashing red	L9	Remote I/O communications error	Check the following items. • Is the master operating properly? • Are master and slave baud rates the same? • Are cable lengths correct (main and branch)? • Are cables connected and not broken? • Are connectors connected securely? • Is there terminating resistance on both end of the main line? • Is there too much noise?
Lit red	Not lit	Blank	CPU Bus Unit error	Restart the Open Network Controller. If the problem persists, replace the DeviceNet Board.

Note The indicator will flash red if the error occurs during remote I/O communications. The indicator will not be lit otherwise.

19-4 Errors for RCOM_UNIT: Connection Process

TCP connections are made with the SerialGateBox (ITNC-SGB01) according to settings when an RCOM_UNIT network provider is started. If a connection cannot be made because power is not supplied to the SerialGateBox, because the cable is disconnected, or because other Units or computers have made connections, an error code of 0505 will be logged and the connection will be retried every 10 seconds. Until the connection is made, the same condition will exist as for HLK_UNIT with a disconnected cable, i.e., FINS messages cannot be sent or received, resulting in FINS error responses of 0103 (retries exceeded).

What happens when a connection is broken after is has been made is described below. (With the SYSWAY protocol, a response is not returned for a timeout. Refer to the syslog.)

Disconnected Cables

For the default SerialGateBox settings, a connection will not be broken even if the cable is disconnected. This means hat the RCOM_UNIT can be used from the point when the cable is connected again.

If the cable is disconnected, a FINS error responses of 0103 (retries exceeded) will be returned. (With the SYSWAY protocol, a response is not returned for a timeout. Refer to the syslog.)

Power Interruptions to SerialGateBox

Even if the SerialGateBox is restarted, the RCOM_UNIT may not detect that the connection was broken. If the RCOM_UNIT does detect that the connection was broken, an error message will be displayed, but the connection will not be restored until the Open Network Controller is rebooted. Reboot the Open Network Controller to restore the connection.

Open Network Controller Keep Alive Timer

The Open Network Controller Keep Alive timer is set to 2 hours and cannot be changed.

Starting Too Many RCOM_UNIT

If more than a specific number of RCOM_UNIT network providers are running at the same time (for example 14 or more), communications may not be performed for them. The number of available sockets can be increased to help deal with this problem by changing the following line in the /etc/netstart file.

Change	/usr/usb/Socklet	$ONCHOST &
To	/usr/usb/Socklet	-t 40 $ONCHOST &

The default limit to the number of sockets that can be used is 16, meaning that a maximum of 16 RCOM_UNIT network providers can be used when using many TCP applications.

Appendix A
Specifications

This appendix lists the specifications for the Open Network Controller.

General Specifications

Item	Specifications	
Model	**ITNC-EPX01**	**ITNC-EPX01-DRM**
Rated supply voltage	24 V DC	
Allowable voltage range	20.4 to 27.6 V DC	
Power consumption	20 W max.	
Insulation resistance	20 MΩ min. between all external DC terminals and ground terminal (at 100 V DC)	
Dialectic strength	Leakage current of 10 mA maximum at 500 V AC, 50/60 Hz, for one minute between all external DC terminals and ground terminal	
Noise immunity	Conforms to IEC61000-4-4: 2 kV (power line noise)	
Vibration resistance	Conforms to JIS C0040: 10 to 57 Hz, 0.075-mm amplitude, 57 to 150 Hz, acceleration: 9.8 m/s^2 in X, Y, and Z directions for 80 minutes each (Time coefficient; 8 minutes × coefficient factor 10 = total time 80 minutes)	
Shock resistance	Conforms to JIS C0041: 147 m/s^2, 3 times in X, Y, and Z directions	
Ambient temperature	Operating: 0 to 55 °C Storage: –20 to 75 °C (with battery removed)	
Ambient humidity	Operating: 10 to 90% RH (with no condensation)	
Ambient environment	No corrosive gases	
Ground	Ground to a resistance of 100 Ω or less.	
Structure	For mounting inside a panel	
Weight	1.0 kg max.	1.1 kg max.
Dimensions	234.4 × 136 × 73.4 mm (W×D×H)	
International standards	Conforms to cULus and EC directives.	

Performance Specifications

Item	Standard Models	
	ITNC-EPX01	**ITNC-EPX01-DRM**
CPU	486-compatible CPU, 133 MHz, with FPU	
Memory	32 Mbytes	
Disk	Flash disk, 32 Mbytes	
Ethernet	10Base-T or 100Base-TX	
Serial ports	Three RS-232C ports, one RS-422/485 port	
OS	QNX 4.25	
PCI bus	One slot	
Memory Card Slot	One slot (3.3 V True IDE connection)	
Field bus	None	DeviceNet
Backup memory	Provided	

Appendix B

Connector Signal Arrangements

This section provides the signal arrangements for each connector.

COM1, COM2, and COM3

From the side of the Open Network Controller

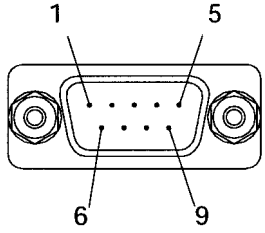

D-sub, 9-pin, male, #4-4OUNC screws

Pin No.	Signal
1	CD
2	RD
3	TD
4	ER
5	SG
6	DR
7	RS
8	CS
9	CI

Recommended Cables for Terminal Connections (OMRON)

XW2Z-200V (D-sub, 9-pin, female, 2 m)
XW2Z-500V (D-sub, 9-pin, female, 5 m)

COM4

From the side of the Open Network Controller

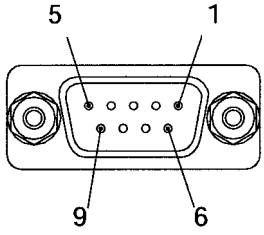

D-sub, 9-pin, female, M2.6 screw

Pin No.	Signal
1	SDA (SD–)
2	SDB (SD+)
3	NC
4	NC
5	NC
6	RDA (RD–)
7	NC
8	RDB (RD+)
9	NC

Ethernet (10Base-T) Connector

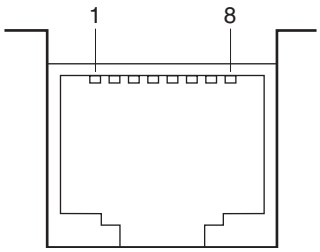

Pin No.	Signal
1	TD+
2	TD–
3	RD+
4	NC
5	NC
6	RD–
7	NC
8	NC

Note Connector model: RJ45

Power Supply Terminal Block

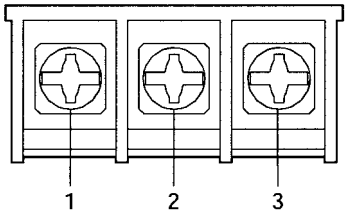

Pin No.	Signal
1	+24 V
2	0 V
3	Functional ground terminal

Appendix C

Logging on to the Open Network Controller

This section provides details on logging on to the Open Network Controller from the personal computer using a COM1 connection or telnet.

Logging ON with a COM1 Connection

Use the following procedure to log on to the Open Network Controller using a COM1 connection. The procedure is described here using the example of logging on with Windows HyperTerminal.

DIP Switch Settings

Turn ON pin 1 of DIP switch 2 and turn ON the Open Network Controller.

Cable Connections

Connect the personal computer's serial port to the COM1 port of the Open Network Controller with cross cable.

Recommended OMRON Cables for Connecting Terminals

XW2Z-200V (D-sub, 9 pin, female, 2 m)

XW2Z-200V (D-sub, 9 pin, female, 5 m)
For details on cable connections, refer to *3-6 Connecting COM Port Cables*.

Starting and Setting the HyperTerminal

1. Start the HyperTerminal on the personal computer.
2. From the File Menu, select ***Properties*** to display the following setting window.

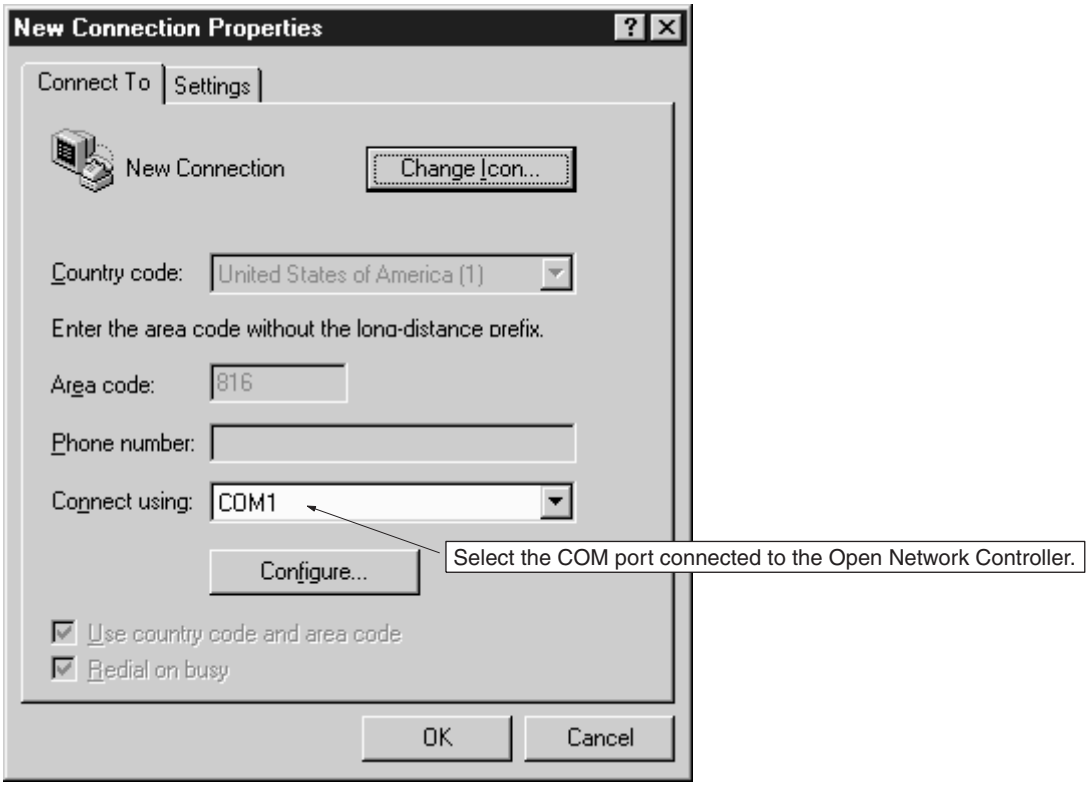

Note The example provided here uses a Windows98 OS. The operations and window displays depend on the OS being used, but use the following procedure to make the COM port settings and communications settings.

3. Click the **Configure** Button, and set the communications settings, as shown in the following window.

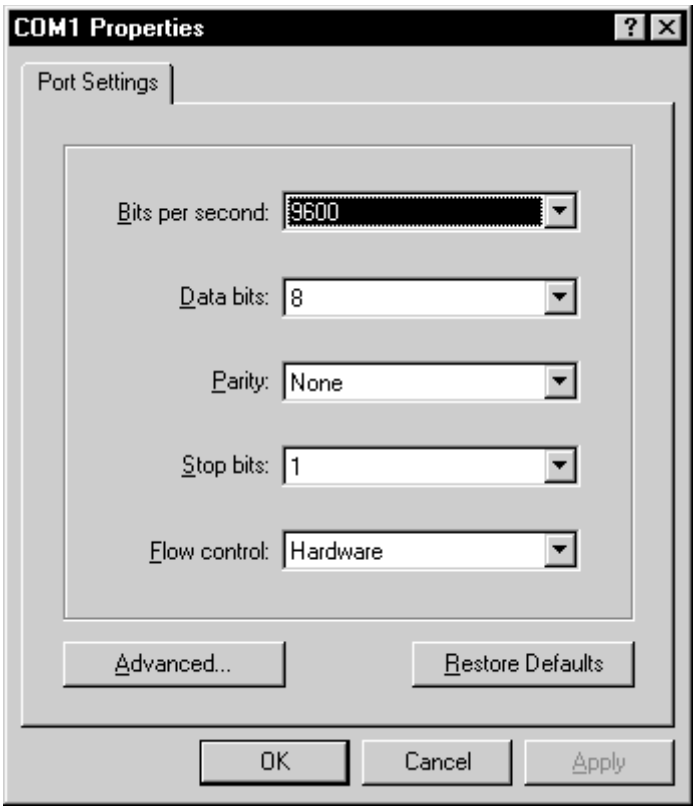

4. After clicking the **OK** Button, select ***Call*** and ***Call***.
5. Turn ON the power to the Open Network Controller. (If the Open Network Controller is already ON, press the **Enter** Key.) Start the Open Network Controller. If it starts normally, the following type of information will be displayed.

```
Welcome to QNX 4.25
Copyright (c) QNX Software Systems Ltd. 1982,1998
login: _
```

Logging on

1. Enter ***root*** after the **login** prompt shown in the previous display to log on. Press the **Enter** Key, enter the password, and press the **Enter** Key again. The default password is “OMRON”.

```
Welcome to QNX 4.25
Copyright (c) QNX Software Systems Ltd. 1982,1998
login: root
password:
Last login: Wed Nov 20 20:33:00 2002 on //1/dev/ser1
Wed Nov 20 20:37:16 2002
# _
```

2. Check the Open Network Controller’s terminal settings. Enter **set** and press the **Enter** Key.
   The Open Network Controller’s environment settings will be displayed. Check that TERM=vt100 is set, and if it is not, enter ***TERM=vt100*** and press the **Enter** Key.

Changing the "root" Password

Use the following procedure to change the **root** password.

1. Enter ***passwd*** and press the **Enter** Key. The following information will be displayed.

```
# passwd
changing password for root
New password:_
```

Note The password is case sensitive, so make sure the use of upper and lower case is correct.

2. Enter the new password and press the **Enter** Key. A message will be displayed prompting for the new password to be entered again.
3. Enter the new password again, and then press the **Enter** Key. The password will change and the command prompt will be displayed.

Logging on with telnet

Use the following procedure to log on to the Open Network Controller from a personal computer through the Ethernet using telnet.

Cable Connections

Connect the Ethernet cable (10Base-T or 100Base-TX) to the LAN port of the Open Network Controller. For details on Connecting Cables, refer to *3-8 Connecting Ethernet Cables.*

Setting the IP Address of the Open Network Controller

The factory setting of the Open Network Controller's IP address is **10.0.0.1**, with the Subnet mask as **255.0.0.0**. Before connecting via telnet for the first time, if the Open Network Controller's IP address requires changing, set the correct IP address by connecting the terminal to the COM1 port. (For details on setting, refer to *4-2 LAN Settings (IP Address)*.)

Setting the IP Address of the Personal Computer

The IP address of the personal computer must be set.

Windows98 Setting Example

1. Select ***Control Panel, Network***, and click the ***Configuration*** Tab. select the TCP/IP protocol as shown in the following window, and click the **Properties** Button.

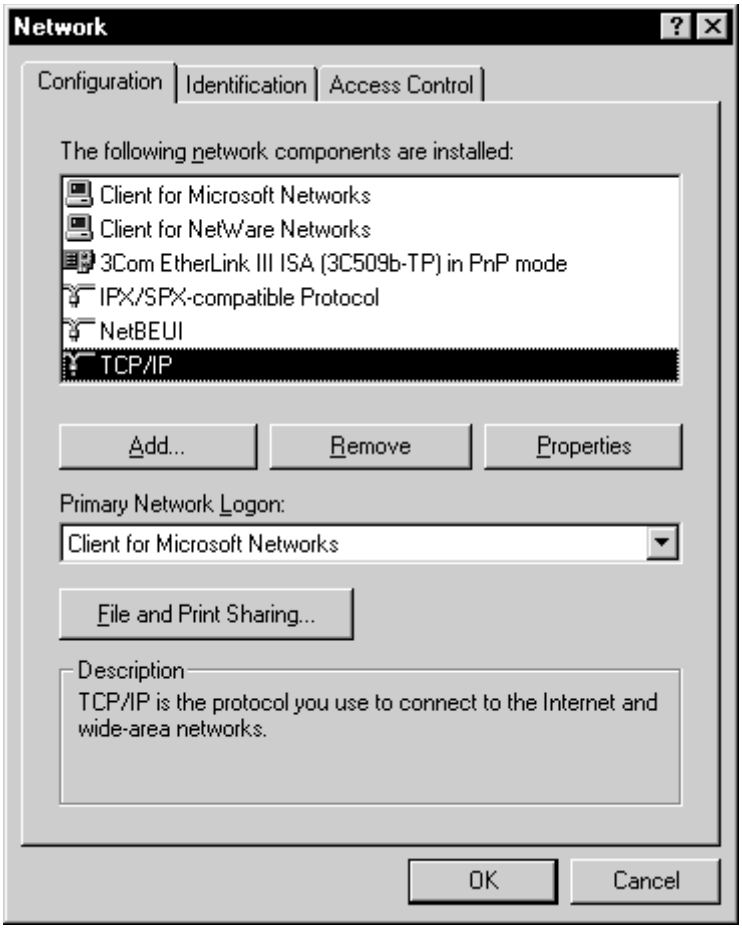

2. Specify the IP address directly, as shown in the following window.

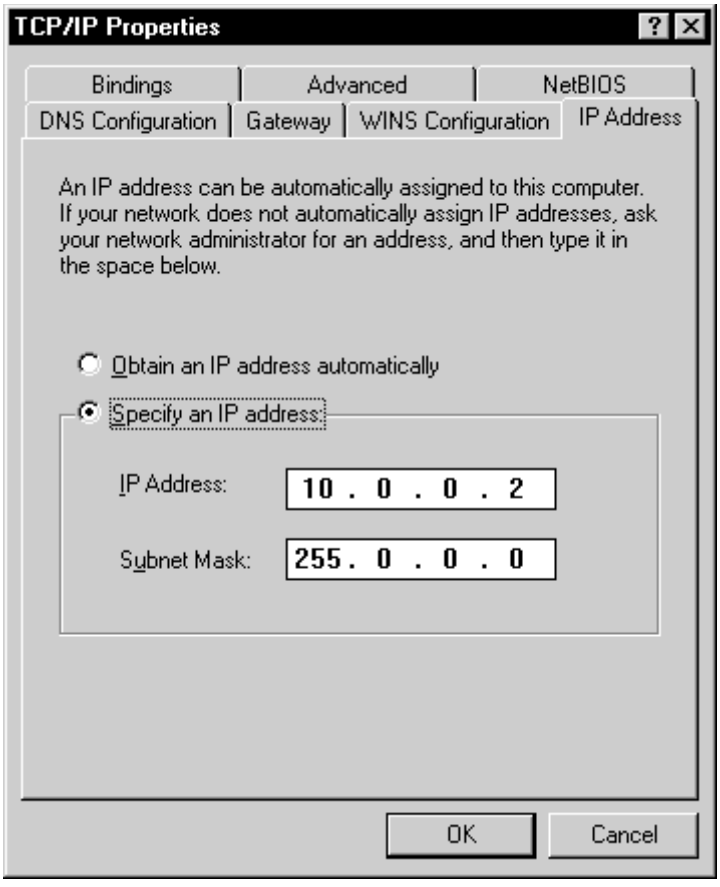

Note Depending on the OS used, the personal computer may require restarting.

Executing telnet

The following example uses Windows to describe the method of connecting to the Open Network Controller with telnet.

1. Select ***Run*** from the Start Menu, and enter the name, as shown in the following window.

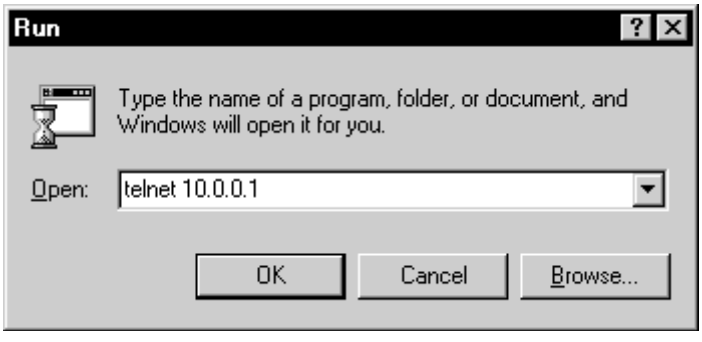

2. Click the **OK** Button. If the Open Network Controller is connected normally, the following terminal window will be displayed.

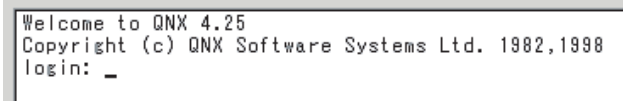

Logging on

1. Enter **root** after the **login** prompt shown in the previous display to log on. Press the **Enter** Key, enter the password, and press the **Enter** Key again. The default password is “OMRON.”

```
Welcome to QNX 4.25
Copyright (c) QNX Software Systems Ltd. 1982,1998
login: root
password:
Last login: Wed Nov 20 20:33:00 2002 on //1/dev/ser1
Wed Nov 20 20:37:16 2002
# _
```

Note For details on changing the password, refer to *Changing the “root” Password* on page 405.

Appendix D

Replacing the Backup Battery

It is recommended that the backup battery for the SRAM (backup memory) is replaced regularly to prevent battery errors. The backup battery is also used for the internal clock when the Open Network Controller power is OFF.

Battery Life

The battery life is five years, regardless of whether power to the Controller is turned ON or OFF. The memory backup time when the power is turned OFF is affected greatly by ambient temperature.

Battery life	Memory backup when power turned OFF	
	Guaranteed	Actual
5 years	20,000 hours (approx. 2 years 3 months)	43,000 hours (approx. 5 years)

Note Guaranteed time: Memory backup time at ambient temperature of 55 °C with power turned OFF.
Actual time: Memory backup time at ambient temperature of 25 °C with power turned OFF.

Battery Model

Replace the battery with a C500-BAT08 Battery Set.

Changing the Battery

The procedure for changing the battery is outlined below.

⚠ **Caution** Set the DIP switch or replace the battery only after first touching a grounded metal object to discharge any static electricity from your body. Static electricity may cause faulty operation.

Note
1. Before replacing the battery, turn ON the power to the Open Network Controller for 5 minutes minimum.
2. Complete the battery replacement operation within two minutes. If the battery is not replaced within 2 minutes, the clock, settings, and internal memory data may be lost.
3. Always turn OFF the power before replacing the battery.

⚠ **Caution** Never perform any of the following operations on the battery. If any of the following operations are performed, the battery may ignite, erupt, or leak fluid.

- Never short the positive (+) and negative (–) terminals.
- Never recharge the battery.
- Never dismantle the battery.
- Never subject the battery to heat or incinerate it.
- Never subject the battery to excessive shock.
  The battery may leak fluid if it is dropped or subjected to other severe shock.

The battery must be replaced by an experienced technician to conform to UL standards.

Procedure

1. Turn OFF the power to the Open Network Controller.
2. Open the battery cover.

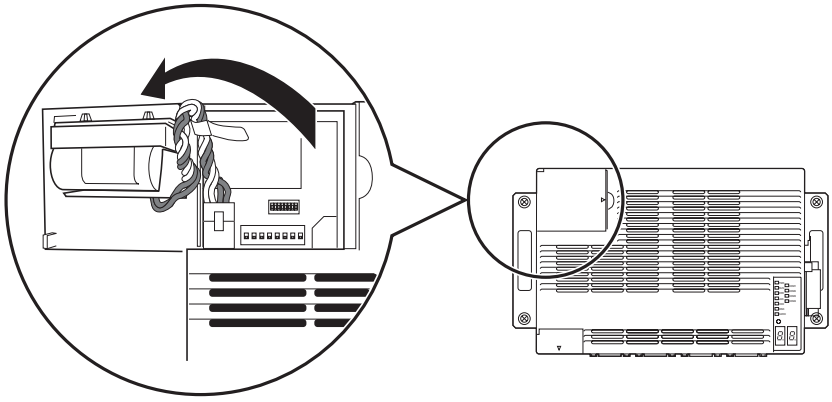

3. Remove the connector for the old battery.
4. Remove the old battery from the battery holder on the battery cover.

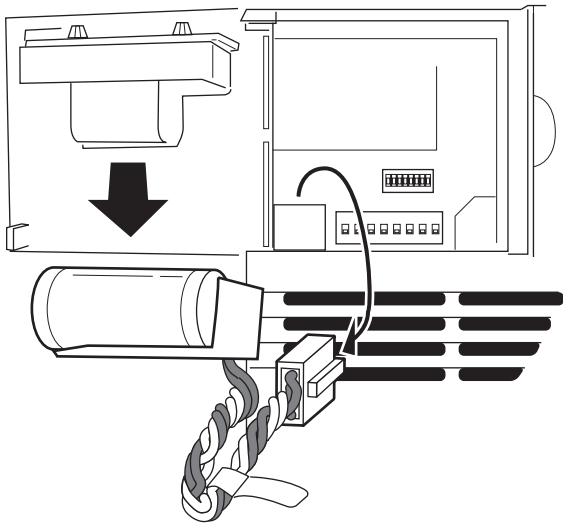

5. Insert the new battery into the battery holder.
6. Plug in the connector for the new battery.
7. Close the battery cover.

Revision History

A manual revision code appears as a suffix to the catalog number on the front cover of the manual.

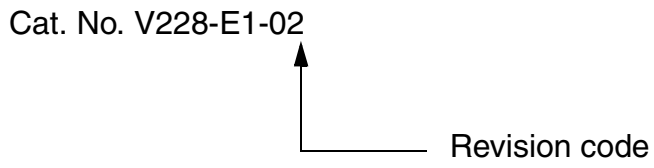

The following table outlines the changes made to the manual during each revision. Page numbers refer to the previous version.

Revision code	Date	Revised content
1	May 2003	Original production
02	October 2004	Revisions made throughout the manual to provide information on the upgrade to unit version 1.1. Corrections to the previous manual were also made.

OMRON CORPORATION
FA Systems Division H.Q.
66 Matsumoto
Mishima-city, Shizuoka 411-8511
Japan
Tel: (81)55-977-9181/Fax: (81)55-977-9045

Regional Headquarters

OMRON EUROPE B.V.
Wegalaan 67-69, NL-2132 JD Hoofddorp
The Netherlands
Tel: (31)2356-81-300/Fax: (31)2356-81-388

OMRON ELECTRONICS LLC
1 East Commerce Drive, Schaumburg, IL 60173
U.S.A.
Tel: (1)847-843-7900/Fax: (1)847-843-8568

OMRON ASIA PACIFIC PTE. LTD.
83 Clemenceau Avenue,
#11-01, UE Square,
Singapore 239920
Tel: (65)6835-3011/Fax: (65)6835-2711

OMRON

Authorized Distributor:

Cat. No. V228-E1-02 Note: Specifications subject to change without notice Printed in Japan

This manual is printed on 100% recycled paper.