Cat. No. W455-E1-08

SmartSlice
GRT1 Series
Slice I/O Units

OPERATION MANUAL

OMRON

NOTE

All rights reserved. No part of this publication may be reproduced, stored in a retrieval system, or transmitted, in any form, or by any means, mechanical, electronic, photocopying, recording, or otherwise, without the prior written permission of OMRON.

No patent liability is assumed with respect to the use of the information contained herein. Moreover, because OMRON is constantly striving to improve its high-quality products, the information contained in this manual is subject to change without notice. Every precaution has been taken in the preparation of this manual. Nevertheless, OMRON assumes no responsibility for errors or omissions. Neither is any liability assumed for damages resulting from the use of the information contained in this publication.

Trademarks

• Microsoft, and Windows are either registered trademarks or trademarks of Microsoft Corporation in the United States and other countries.
• ODVA, CIP, CompoNet, DeviceNet, and EtherNet/IP are trademarks of ODVA.

Other company names and product names in this document are the trademarks or registered trademarks of their respective companies.

Copyrights

Microsoft product screen shots reprinted with permission from Microsoft Corporation.

SmartSlice
GRT1 Series
Slice I/O Units

Operation Manual

Revised December 2018

Notice:

OMRON products are manufactured for use according to proper procedures by a qualified operator and only for the purposes described in this manual.

The following conventions are used to indicate and classify precautions in this manual. Always heed the information provided with them. Failure to heed precautions can result in injury to people or damage to property.

⚠ DANGER Indicates an imminently hazardous situation which, if not avoided, will result in death or serious injury. Additionally, there may be severe property damage.

⚠ WARNING Indicates a potentially hazardous situation which, if not avoided, could result in death or serious injury. Additionally, there may be severe property damage.

⚠ Caution Indicates a potentially hazardous situation which, if not avoided, may result in minor or moderate injury, or property damage.

OMRON Product References

All OMRON products are capitalized in this manual. The word “Unit” is also capitalized when it refers to an OMRON product, regardless of whether or not it appears in the proper name of the product.

The abbreviation “Ch,” which appears in some displays and on some OMRON products, often means “word” and is abbreviated “Wd” in documentation in this sense.

The abbreviation “PLC” means Programmable Controller. “PC” is used, however, in some Programming Device displays to mean Programmable Controller.

Visual Aids

The following headings appear in the left column of the manual to help you locate different types of information.

Note Indicates information of particular interest for efficient and convenient operation of the product.

1,2,3... 1. Indicates lists of one sort or another, such as procedures, checklists, etc.

TABLE OF CONTENTS

PRECAUTIONS xiii

1 Intended Audience xiv
2 General Precautions xiv
3 Safety Precautions xiv
4 Operating Environment Precautions xv
5 Application Precautions xvi
6 EC Directives xviii

SECTION 1
Available Units and Features 1

1-1 Slice I/O Terminal Introduction 2
1-2 Available Units 7

SECTION 2
Shared Specifications and Functions 11

2-1 Specifications Shared by the Units 12
2-2 Unit Numbers and I/O Allocations 13
2-3 Functions Shared by all Units 17

SECTION 3
Installation and Wiring 29

3-1 Installation 30
3-2 Power Supply Wiring 36
3-3 Connecting Turnback Cables 40

SECTION 4
Digital I/O Units 43

4-1 Overview 44
4-2 Status Area 45
4-3 I/O Wiring 47
4-4 Functions of Digital I/O Units 48
4-5 Maintenance Information Window 60
4-6 Digital I/O Units 64

SECTION 5
Analog I/O Units 89

5-1 Overview of Analog I/O Units 90
5-2 Status Areas 95
5-3 Maintenance Information Window 97
5-4 Analog Input Units 99
5-5 Analog Output Units 137

TABLE OF CONTENTS

SECTION 6
Temperature Input Units 155

6-1 Overview of the Temperature Input Units 156
6-2 Status Areas 162
6-3 Maintenance Information Window 164
6-4 Temperature Input Units 167

SECTION 7
Counter Units and Positioning Unit 225

7-1 Overview 226
7-2 Status Areas 227
7-3 Maintenance Information Window 229
7-4 GRT1-CT1(-1) Counter Units 235
7-5 GRT1-CP1-L Positioning Unit 252

SECTION 8
Other Units 273

8-1 GRT1-TBR Right Turnback Unit 274
8-2 GRT1-TBL Left Turnback Unit. 274
8-3 GRT1-PD2 and GRT1-PD2G I/O Power Feed Units 275
8-4 GRT1-PD8(-1) I/O Power Feed Units and GRT1-PC8(-1) I/O Power Connection Units. . . 277
8-5 GRT1-END End Unit 279

SECTION 9
Troubleshooting 281

9-1 Troubleshooting Overview 282
9-2 LED Indicators and Error Processing 283
9-3 Reading the Error History with a Programming Device 287
9-4 Other Errors 291
9-5 Troubleshooting by Unit 293

Appendices

A Explicit Messages 303
B Standard Models 331
C Power Consumption and Weight Tables 333
D I/O Current Consumption Table 335
E Precautions When Connecting Two-wire DC Sensors 337

Index. 339

Revision History 343

About this Manual:

This manual describes the installation and operation of the Slice I/O Units and includes the sections described below. Please read this manual carefully and be sure you understand the information provided before attempting to install or operate Slice I/O Units. **Be sure to read the precautions provided in the following section.**

The following manuals also cover information related to DeviceNet applications in which Slice I/O Terminals are used. Use the *DeviceNet Operation Manual* together with other required manuals.

Manual	Contents	Cat. No.
SmartSlice GRT1 Series Slice I/O Units Operation Manual (this manual)	Describes the models, specifications, functions, operating procedures, and applications of GRT1-series Slice I/O Units.	W455
DeviceNet™ Communications Unit for Slice I/O Terminals Operation Manual	Describes the specifications, functions, operating procedures, and applications of the DeviceNet Communications Unit, which allows Slice I/O Units to be set, controlled, and monitored through DeviceNet.	W454
DeviceNet™ Operation Manual	Describes the configuration and construction of a DeviceNet network, including installation procedures and specifications for cables, connectors, and other connection devices, as well as information on functions, operating procedures, and applications. Read this manual carefully and be sure you understand the information provided before attempting to use DeviceNet.	W267
CS/CJ Series DeviceNet™ Units Operation Manual	Describes the specifications, functions, operating procedures, and applications of CS-series and CJ-series DeviceNet Units. (A CS/CJ-series DeviceNet Unit can operate as both a DeviceNet Master and DeviceNet slave at the same time.)	W380
DeviceNet™ Configurator Ver. 2.□ Operation Manual	Describes the operating procedures of the DeviceNet Configurator. The DeviceNet Configurator can be used to configure, set, and maintain a DeviceNet system through an easy-to-use graphical interface. Refer to this manual when necessary.	W382
SmartSlice PROFIBUS Communications Unit Operation Manual	Describes the specifications, functions, operating procedures, and applications of the GRT1-PRT PROFIBUS Communications Unit, which allows Slice I/O Units to be set, controlled, and monitored through PROFIBUS.	W04E
PROFIBUS Master Units Operation Manual	Describes the specifications, functions, operating procedures, and applications of CS-series and CJ-series PROFIBUS Master Units.	W409
CX-Profibus Ver. 1.0 Operation Manual	Describes the operating procedures of CX-Profibus. The CX-Profibus can be used to configure, set, and maintain a PROFIBUS system through an easy-to-use graphical interface. Refer to this manual when necessary.	W05E

Precautions provides general precautions for planning, installing, and operating the Slice I/O Units and related devices.

Section 1 describes the features of GRT1-series Slice I/O Units and lists the available Units.

Section 2 describes the specifications and functions that are shared by all of the Slice I/O Units.

Section 3 explains how to install and wire the Slice I/O Units.

Section 4 provides the specifications and shows the components, terminal arrangements, wiring diagrams, and dimensions for the Digital Slice I/O Units.

Section 5 provides the information required to operate Analog Input Units and Analog Output Units, including functions, status areas, windows, specifications, wiring, data allocation, and settings.

Section 6 provides the information required to operate the Temperature Input Unit, including functions, status areas, windows, specifications, wiring, data allocation, and settings.

Section 7 provides information required to operate Counter Units and Positioning Units, including functions, status areas, windows, specifications, wiring, I/O data assignments, and settings.

Section 8 provides the basic specifications and shows the components, wiring diagrams, and dimensions for the other Units used in Slice I/O Terminals.

Section 9 describes error processing and troubleshooting procedures needed to keep the Slice I/O Units operating properly.

The ***Appendices*** provide information on using explicit messages; tables of standard models, power consumptions, current consumptions, and weights; and precautions for using two-wire DC sensors.

⚠ **WARNING** Failure to read and understand the information provided in this manual may result in personal injury or death, damage to the product, or product failure. Please read each section in its entirety and be sure you understand the information provided in the section and related sections before attempting any of the procedures or operations given.

Terms and Conditions Agreement

Warranty, Limitations of Liability

Warranties

Exclusive Warranty

Omron's exclusive warranty is that the Products will be free from defects in materials and workmanship for a period of twelve months from the date of sale by Omron (or such other period expressed in writing by Omron). Omron disclaims all other warranties, express or implied.

Limitations

OMRON MAKES NO WARRANTY OR REPRESENTATION, EXPRESS OR IMPLIED, ABOUT NON-INFRINGEMENT, MERCHANTABILITY OR FITNESS FOR A PARTICULAR PURPOSE OF THE PRODUCTS. BUYER ACKNOWLEDGES THAT IT ALONE HAS DETERMINED THAT THE PRODUCTS WILL SUITABLY MEET THE REQUIREMENTS OF THEIR INTENDED USE.

Omron further disclaims all warranties and responsibility of any type for claims or expenses based on infringement by the Products or otherwise of any intellectual property right.

Buyer Remedy

Omron's sole obligation hereunder shall be, at Omron's election, to (i) replace (in the form originally shipped with Buyer responsible for labor charges for removal or replacement thereof) the non-complying Product, (ii) repair the non-complying Product, or (iii) repay or credit Buyer an amount equal to the purchase price of the non-complying Product; provided that in no event shall Omron be responsible for warranty, repair, indemnity or any other claims or expenses regarding the Products unless Omron's analysis confirms that the Products were properly handled, stored, installed and maintained and not subject to contamination, abuse, misuse or inappropriate modification. Return of any Products by Buyer must be approved in writing by Omron before shipment. Omron Companies shall not be liable for the suitability or unsuitability or the results from the use of Products in combination with any electrical or electronic components, circuits, system assemblies or any other materials or substances or environments. Any advice, recommendations or information given orally or in writing, are not to be construed as an amendment or addition to the above warranty.

See http://www.omron.com/global/ or contact your Omron representative for published information.

Limitation on Liability; Etc

OMRON COMPANIES SHALL NOT BE LIABLE FOR SPECIAL, INDIRECT, INCIDENTAL, OR CONSEQUENTIAL DAMAGES, LOSS OF PROFITS OR PRODUCTION OR COMMERCIAL LOSS IN ANY WAY CONNECTED WITH THE PRODUCTS, WHETHER SUCH CLAIM IS BASED IN CONTRACT, WARRANTY, NEGLIGENCE OR STRICT LIABILITY.

Further, in no event shall liability of Omron Companies exceed the individual price of the Product on which liability is asserted.

Application Considerations

Suitability of Use

Omron Companies shall not be responsible for conformity with any standards, codes or regulations which apply to the combination of the Product in the Buyer's application or use of the Product. At Buyer's request, Omron will provide applicable third party certification documents identifying ratings and limitations of use which apply to the Product. This information by itself is not sufficient for a complete determination of the suitability of the Product in combination with the end product, machine, system, or other application or use. Buyer shall be solely responsible for determining appropriateness of the particular Product with respect to Buyer's application, product or system. Buyer shall take application responsibility in all cases.

NEVER USE THE PRODUCT FOR AN APPLICATION INVOLVING SERIOUS RISK TO LIFE OR PROPERTY OR IN LARGE QUANTITIES WITHOUT ENSURING THAT THE SYSTEM AS A WHOLE HAS BEEN DESIGNED TO ADDRESS THE RISKS, AND THAT THE OMRON PRODUCT(S) IS PROPERLY RATED AND INSTALLED FOR THE INTENDED USE WITHIN THE OVERALL EQUIPMENT OR SYSTEM.

Programmable Products

Omron Companies shall not be responsible for the user's programming of a programmable Product, or any consequence thereof.

Disclaimers

Performance Data

Data presented in Omron Company websites, catalogs and other materials is provided as a guide for the user in determining suitability and does not constitute a warranty. It may represent the result of Omron's test conditions, and the user must correlate it to actual application requirements. Actual performance is subject to the Omron's Warranty and Limitations of Liability.

Change in Specifications

Product specifications and accessories may be changed at any time based on improvements and other reasons. It is our practice to change part numbers when published ratings or features are changed, or when significant construction changes are made. However, some specifications of the Product may be changed without any notice. When in doubt, special part numbers may be assigned to fix or establish key specifications for your application. Please consult with your Omron's representative at any time to confirm actual specifications of purchased Product.

Errors and Omissions

Information presented by Omron Companies has been checked and is believed to be accurate; however, no responsibility is assumed for clerical, typographical or proofreading errors or omissions.

PRECAUTIONS

This section provides general precautions for installing and using the GRT1-series Slice I/O Units and related devices.

The information contained in this section is important for the safe and reliable application of the Slice I/O Units. You must read this section and understand the information contained before attempting to set up or operate a Slice I/O Terminal.

1 Intended Audience xiv
2 General Precautions xiv
3 Safety Precautions xiv
4 Operating Environment Precautions xv
5 Application Precautions xvi
6 EC Directives xviii

1 Intended Audience

This manual is intended for the following personnel, who must also have knowledge of electrical systems (an electrical engineer or the equivalent).

- Personnel in charge of purchasing FA systems.
- Personnel in charge of designing FA systems.
- Personnel in charge of installing and connecting FA systems.
- Personnel in charge of managing FA systems and facilities.

2 General Precautions

The user must operate the product according to the specifications described in the operation manuals.

Before using the product under conditions which are not described in the manual or applying the product to nuclear control systems, railroad systems, aviation systems, vehicles, combustion systems, medical equipment, amusement machines, safety equipment, and other systems, machines, and equipment that may have a serious influence on lives and property if used improperly, consult your OMRON representative.

Make sure that the ratings and performance characteristics of the product are sufficient for the systems, machines, and equipment, and be sure to provide the systems, machines, and equipment with redundant safety mechanisms.

This manual provides information for installing and operating OMRON DeviceNet products. Be sure to read this manual before operation and keep this manual close at hand for reference during operation.

⚠ **WARNING** It is extremely important that a PLC and all PLC Units be used for the specified purpose and under the specified conditions, especially in applications that can directly or indirectly affect human life. You must consult with your OMRON representative before applying a PLC system to the above mentioned applications.

3 Safety Precautions

⚠ **WARNING** Never attempt to disassemble any Units or touch the terminal block while power is being supplied. Doing so may result in serious electrical shock.

⚠ **WARNING** Do not apply voltages or currents outside the specified ranges to a Slice I/O Unit. Doing so may cause a malfunction or fire.

⚠ **WARNING** Always turn OFF the I/O power supply to the I/O Unit before performing online replacement or connecting/disconnecting wiring, including fixing a loose wire. In addition, if external power is supplied to the terminal block for a Unit such as a Relay Output Unit or AC Input Unit, turn OFF that power supply before replacing the Unit. Not turning OFF these power supplies may result in false output signals, false input signals, or electrical shock.

⚠ **WARNING** Provide safety measures in external circuits (i.e., not in the Programmable Controller), including the following items, to ensure safety in the system if an abnormality occurs due to malfunction of the PLC or another external factor affecting the PLC operation. Not doing so may result in serious accidents.

- Emergency stop circuits, interlock circuits, limit circuits, and similar safety measures must be provided in external control circuits.
- The PLC will stop operation when its self-diagnosis function detects any error or when a severe failure alarm (FALS) instruction is executed. Unexpected operation, however, may still occur for errors in the I/O control section, errors in I/O memory, and other errors that cannot be detected by the self-diagnosis function. As a countermeasure for all such errors, external safety measures must be provided to ensure safety in the system.
- The PLC outputs may remain ON or OFF due to deposits on or burning of the output relays, or destruction of the output transistors. As a countermeasure for such problems, external safety measures must be provided to ensure safety in the system.
- When the 24-VDC output (service power supply to the PLC) is overloaded or short-circuited, the voltage may drop and result in the outputs being turned OFF. As a countermeasure for such problems, external safety measures must be provided to ensure safety in the system.
- Slice I/O Terminals will continue operating even if one or more I/O Units is removed from or falls out of the Slice I/O Terminal, i.e., the other I/O Units will continue control operations, including outputs. As a countermeasure for such a possibility, external safety measures must be provided to ensure safety in the system.

⚠ **WARNING** The CPU Unit refreshes I/O even when the program is stopped (i.e., even in PROGRAM mode). Confirm safety thoroughly in advance before changing the status of any part of memory allocated to Output Units, Special I/O Units, or CPU Bus Units. Any changes to the data allocated to any Unit may result in unexpected operation of the loads connected to the Unit. Any of the following operations may result in changes to memory status.

- Transferring I/O memory data to the CPU Unit from a Programming Device
- Changing present values in memory from a Programming Device
- Force-setting/-resetting bits from a Programming Device
- Transferring I/O memory files from a Memory Card or EM file memory to the CPU Unit
- Transferring I/O memory from a host computer or from another PLC on a network

4 Operating Environment Precautions

Install the system properly according to the directions in this manual.

Do not operate the control system in the following places.

- Locations subject to direct sunlight.
- Locations subject to temperatures or humidity outside the range specified in the specifications.

- Locations subject to condensation as the result of severe changes in temperature.
- Locations subject to corrosive or flammable gases.
- Locations subject to dust (especially iron dust) or salts.
- Locations subject to water, oil, or chemicals (Digital I/O Units)
- Locations subject to acid or chemicals.
- Locations subject to shock or vibration.

Take appropriate and sufficient countermeasures when installing systems in the following locations:

- Locations subject to static electricity or other forms of noise.
- Locations subject to strong electromagnetic fields.
- Locations subject to possible exposure to radioactivity.
- Locations close to power supplies.

⚠ **Caution** The operating environment of the PLC System can have a large effect on the longevity and reliability of the system. Improper operating environments can lead to malfunction, failure, and other unforeseeable problems with the PLC System. Be sure that the operating environment is within the specified conditions at installation and remains within the specified conditions during the life of the system.

5 Application Precautions

Observe the following precautions when using the Slice I/O Units.

- Fail-safe measures must be taken by the customer to ensure safety in the event of incorrect, missing, or abnormal signals caused by broken signal lines, momentary power interruptions, or other causes.
- Provide external interlock circuits, limit circuits, and other safety circuits in addition to any provided within the PLC to ensure safety.
- Use the power supplies specified in the operation manuals.
- If the system is installed at a site with poor power supply conditions, take appropriate measures to ensure that the power supply remains within the rated voltage and frequency specifications.
- Provide circuit breakers and other safety measures to provide protection against shorts in external wiring.
- Always ground the system to 100 Ω or less when installing the system to protect against electrical shock.
- Mount the PLC securely on DIN Track or with screws.
- Always turn OFF the power supply when mounting a Slice I/O Unit.
- Always turn OFF the communications power supply and the power supplies to the PLC and Slaves before attempting any of the following.
  - Mounting or removing a Unit such as an I/O Unit, CPU Unit, Memory Cassette, or Master Unit.
  - Mounting or removing Remote I/O Terminal circuit sections.
  - Assembling any devices or racks.
  - Setting rotary switches.
  - Connecting or wiring cables.
  - Connecting or disconnecting connectors.
- Do not attempt to disassemble, repair, or modify any Units.

- Be sure that all the terminal screws are tightened to the torque specified in the relevant manuals. Loose screws may cause fire, malfunction, or damage the Unit.
- Be sure that all the mounting screws and cable connector screws are tightened to the torque specified in the relevant manuals.
- Be sure that all the communications connector screws are tightened securely. (The communications connector screw torque is 0.5 to 0.6 N·m.)
- Use the correct wiring components when wiring.
- Use crimp terminals for wiring. Do not connect bare stranded wires directly to terminals.
- Double-check all wiring before turning ON the power supply.
- When wiring or performing other tasks, do not allow metal objects such as wire strands to enter the Unit.
- Always follow the electrical specifications for terminal polarity, communications path wiring, power supply wiring, and I/O jumpers. Incorrect wiring can cause failures.
- Always wire the Unit as shown in the manual.
- Be sure to press terminals until they are fully seated.
- Mount Units only after checking terminal blocks completely.
- Before mounting a wired terminal block to the main block, be sure that the terminal block-main block combination is correct.
- Be sure that the communications cable connectors and other items with locking devices are properly locked into place.
- Do not drop the Unit or subject the Unit to excessive vibration or shock. Doing so may cause malfunction or damage to the Unit.
- Use the special packing box when transporting the Unit. Ensure that the product is handled carefully so that no excessive vibration or impact is applied to the product during transportation.
- Check the user program for proper execution before actually running it with the system.
- Do not bend or pull the cables excessively.
- When connecting communications cables, always turn OFF the PLC power supply, all Slave power supplies, and all communications power supplies.
- Observe the following precautions when wiring the communications cables.
    - Wire the communications cables separately from the power lines or high-tension lines.
    - Do not bend the communications cables excessively.
    - Do not pull on the communications cables excessively.
    - Do not place objects on top of the communications cables.
    - Route communications cables inside ducts.
- Always enable the scan list before operation.
- Before clearing the scan list of a Unit that has user-allocated remote I/O, always confirm that no errors occur after the I/O Area setting is changed to fixed allocation.
- When adding a new node to the network, check that the new node's baud rate is the same as the baud rate set on the other nodes.

- Do not extend connection distances beyond the ranges given in the specifications.
- Be sure that the Slice I/O Units are lined up correctly when mounting them.
- Correctly connect the Slice I/O Units to each other. The I/O power supply will become disconnected if the base blocks on the Slice I/O Units are not connected correctly.
  While outputs are being transmitted from the Communications Unit, the output indicators on the Slice Output Unit will be lit, but the outputs will actually be OFF.

6 EC Directives

DeviceNet products conform to EMS and low-voltage level directives as follows:

EMC Directive

OMRON devices that comply with EC Directives also conform to the related EMC standards, so that they can more easily be built in to other devices or the overall machine. The actual products have been checked for conformity to EMC standards. Whether they conform to the standards in the system used by the customer, however, must be checked by the customer.

EMC-related performance of the OMRON devices that comply with EC Directives will vary depending on the configuration, wiring, and other conditions of the equipment or control panel on which the OMRON devices are installed. The customer must, therefore, perform the final check to confirm that devices and the overall machine conform to EMC standards.

Low Voltage Directive

Devices that operate at voltages from 50 to 1,000 VAC or 75 to 1,500 VDC must satisfy the appropriate safety requirements. The applicable standard is EN 61131-2.

Complying with EC Directives

1,2,3...

1. The Slice I/O Units are designed for installation inside control panels. All Slice I/O Units must be installed within control panels.
2. Use reinforced insulation or double insulation for the DC power supplies used for the communications power supply, internal circuit power supply, and the I/O power supplies. Ensure that stable outputs can be provided even if a 10-ms interruption occurs at the input.
3. The Slice I/O Units conform to the EN 61131-2 (Immunity Zone A), EN 61000-6-2, and EN 61000-6-4 standards. AC power connections to Slice I/O Units must use a protection network if the severity levels for Zone A are exceeded. The radiated emission characteristics (10-m regulations) may vary depending on the configuration of the control panel used, other devices connected to the control panel, wiring, and other conditions. You must therefore confirm that the overall machine or equipment complies with EC Directives.

The following examples shows how to reduce noise.

1,2,3...

1. Noise from the communications cable can be reduced by installing ferrite cores on the communications cable within 10 cm of the DeviceNet Unit and DeviceNet Communications Unit.

Ferrite Core (Data Line Filter): 0443-164151 (manufactured by Nisshin Electric)

Impedance specifications
25 MHz: 156 Ω
100 MHz: 250 Ω

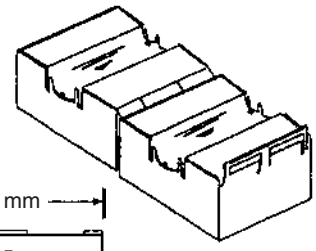

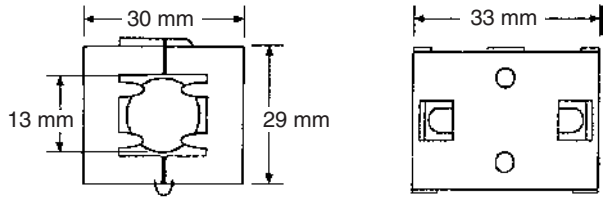

2. Wire the control panel with as thick and short cables as possible and ground to 100 Ω min.
3. Keep DeviceNet communications cables as short as possible and ground to 100 Ω min.

SECTION 1
Available Units and Features

This section describes the features of GRT1-series Slice I/O Units and lists the available Units.

1-1 Slice I/O Terminal Introduction 2
1-1-1 Features of the GRT1-series Slice I/O Units 2
1-2 Available Units 7
1-2-1 Communications Units 7
1-2-2 Digital I/O Units 7
1-2-3 Analog I/O Units. 7
1-2-4 Counter Units and Positioning Unit 8
1-2-5 System Units. 8
1-2-6 Connecting Cable 9
1-2-7 Functions Supported by Slice I/O Units 9
1-2-8 Slice I/O Unit Installation and Power Supply Methods 10

1-1 Slice I/O Terminal Introduction

A Slice I/O Terminal is a building-block style remote I/O terminal made up of a Communications Unit and a number of Slice I/O Units, which each provide a small number of I/O points. The Slice I/O Units communicate with the host by remote I/O communications (cyclic communications) through the Communications Unit. Remote I/O communications (cyclic communications) can be started just by setting the Communications Unit's node address and turning ON the power supply.

Since the Slice I/O Units expand the system in small I/O increments, a flexible system can be assembled to exactly match various customer applications, with less labor and space.

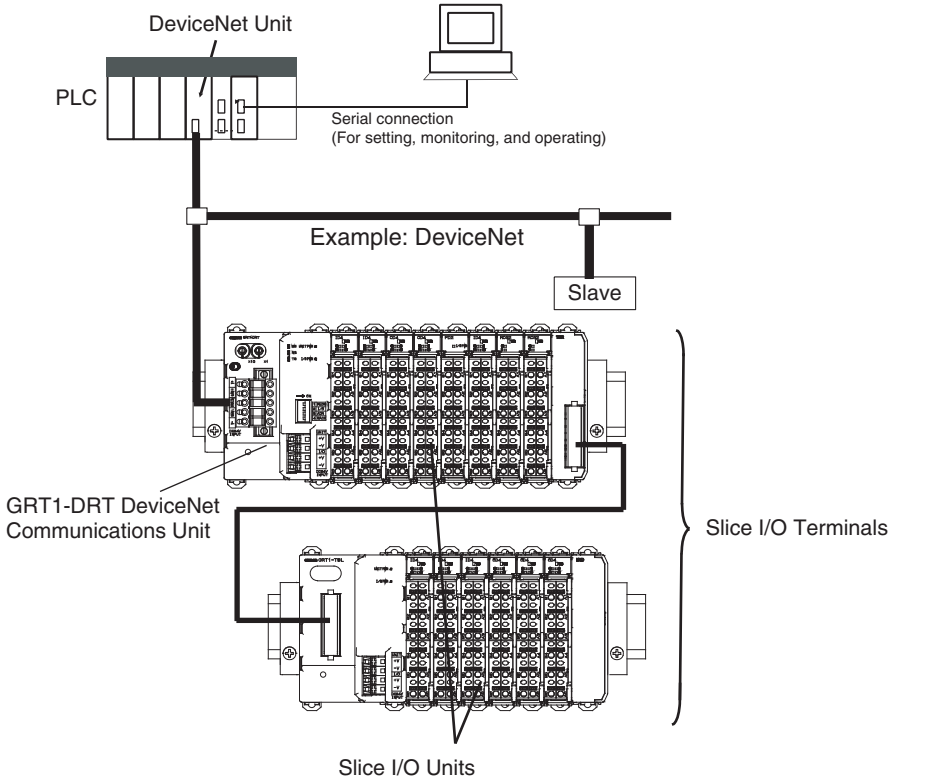

Up to 64 Slice I/O Units can be connected to one DeviceNet Communications Unit.
(Up to 1,024 inputs and outputs can be connected.)

1-1-1 Features of the GRT1-series Slice I/O Units

The GRT1-series Slice I/O Units have the following features.

Features Shared by all Units

Small I/O Increments

The GRT1-series Slice I/O Units have just a few I/O points (2 to 4 points) per Unit, so the application can be flexibly constructed to match the space and capacity requirements.

Building-block Style Terminals

Slice I/O Terminals are building-block style Units that can be expanded by attaching additional Slice I/O Units to the side of the Terminal. Up to 64 Slice I/O Units can be connected to one Communications Unit.

Time-saving Screwless Terminal Blocks

Slice I/O Units are equipped with screwless clamp terminal blocks, which can be wired just by inserting the wire into the terminals. Wires can be removed just by pressing the release button and pulling out the wire.

Parameter Backup and Restore

Before replacing a Slice I/O Unit for maintenance, the parameter data set in the I/O Unit can be backed up in the connected Communications Unit. The backed up parameter data is compared with the replacement I/O Unit's data and the backed up data is restored to the replacement I/O Unit.

Online Replacement of I/O Units

The Slice I/O Units are made up of 3 blocks (the base block, main block, and terminal block) that can be separated from each other. This means you can leave the base block connected to the Slice I/O Terminal with power supplied to the Slice I/O Terminal and replace the main block or terminal block.

Note Turn OFF the I/O power supply before replacing Slice I/O Unit blocks. Also turn OFF any external power supplied to the terminals.

Automatic Baud Rate Recognition

It isn't necessary to set the baud rate on the GRT1-series Slice I/O Units.

Automatic Allocation of Unit Numbers

Unit numbers are allocated automatically to the connected Slice I/O Units from left to right and stored within the Communications Unit. It is not necessary for the user to set these numbers.

Remote I/O Communications

GRT1-series Slice I/O Units communicate with the host Master by remote I/O communications through the Communications Unit. The Slice I/O Units' data is collected in the Communications Unit and exchanged with the Master in a batch.

Unit Conduction Time (Power ON Time) Monitor

This function records the total time that the Slice I/O Unit's internal circuit power has been ON. A warning level can be set in the Unit and a warning flag will be turned ON when the set warning time is exceeded. The Power ON Time can be read with an explicit message command or from the Configurator.

Unit Comments

A user-set name can be assigned to each Unit and recorded in the Unit.

Connected Device Comments

User-set names can be assigned to each I/O device (sensor, valve, etc.) connected to a Unit and recorded in the Unit.

Communications Error History Monitor

The communications error log within the Unit can collect the four most recent communications errors (communications error cause code and communications power supply voltage when error occurred). The information can be read with an explicit message command or from the Configurator.

Last Maintenance Date

The date on which maintenance was performed can be written in the Unit. The date can be written from the Configurator.

Digital I/O Unit Features

I/O Power Supply Monitor

This function detects whether the I/O power is being supplied and turns ON a warning flag in the Unit if the I/O power supply is OFF. The flags can be read with an explicit message command or from the Configurator.

Input Filter

The input filter function reads the input value several times during the set interval and removes irregular data caused by noise and switch chattering.

This function can also be used to create ON/OFF delays.

Sensor Power ON Delay

When the I/O power has gone OFF, the sensor power ON delay function blocks inputs for the first 100 ms after the I/O power is turned back ON. This function prevents incorrect inputs caused by inrush current at startup after the I/O power is turned ON.

Contact Operation Counter

This function can count the number of times each input or output contact changes from OFF to ON (maximum resolution: 50 Hz). A warning set value can be set in the Unit to monitor the number of contact operations, and turn ON a warning flag in the Status Area when the set value is reached. The Configurator or explicit messages can be used to read the information.

Note The Contact Operation Counter and Total ON Time Monitor cannot be used at the same time for a single contact.

Total ON Time Monitor

This function can record the total ON time of devices connected to the Unit, such as sensors and relays. The total time is stored in the Unit and can be read by the Configurator or explicit messages. A warning set value can be set in the Unit to monitor the total ON time, and turn ON a warning flag in the Status Area when the set value is reached.

Note The Total ON Time Monitor and Contact Operation Counter cannot be used at the same time for a single contact.

Operation Time Monitor

This function can measure and monitor an Input Unit's operating time. The time required for a bit to go ON or OFF can be measured at high speed within the Unit, so that ladder programming is not required to measure the operating time. The trigger edge (ON→OFF or OFF→ON), input number, and output number can be selected freely, providing flexibility when testing. A warning set value can be set in the Unit to monitor the operating time, and turn ON a warning flag in the Status Area when the set value is reached.

Analog I/O Unit Features

Setting the Number of AD Conversion Points

The conversion cycle when both analog input points are used is 2.42 ms max. The AD conversion cycle can be shortened by reducing the number of points used (i.e., the number of AD conversion points).

Moving Average

Analog Input Terminals can calculate the average of the past eight analog input values to produce a stable input value even when the input value is unsteady.

Scaling

Scaling allows values to be converted according to the industry unit required by the user. It reduces the number of operations requiring ladder programming in the Master CPU Unit. Scaling also supports an offset function for compensating for errors in scaled values.

Peak/Bottom Hold

The maximum (peak) and minimum (bottom) values input to Analog Input Terminals can be held. These values can then be compared with alarm set values, and flags turned ON accordingly to indicate the status (comparator function).

Top/Valley Hold (Input Units Only)

The top and valley values for values input to Analog Input Terminals can be held. The timing of tops and valleys can be monitored with the Top/Valley Detection Timing Flags. The top and valley values can be compared with alarm set values, and flags turned ON accordingly to indicate the status (comparator function).

Rate of Change

The rate of change for values input to Analog Input Terminals can be obtained for each sampling cycle.

Comparator

Values input to Analog Input Terminals or values after math processing can be compared to the alarm set values (HH, H, L, and LL), and the result indicated with the Analog Status Flags. If the result is outside the set range, the Normal Flag (pass signal) is turned ON.

Off-wire Detection

With Analog Input Terminals, disconnections can be detected in wiring for analog (voltage or current) inputs that are enabled as AD conversion points.

The status can be checked at the Master using the Off-wire Detection Flag. This function is valid only for the input ranges 4 to 20 mA and 1 to 5 V.

User Adjustment

Input or output values can be adjusted to compensate for errors in the input or output voltage or current resulting from the characteristics or connection methods of the I/O device. Compensation is performed by applying linear conversion based on the points corresponding to 0% and 100%.

Cumulative Counter

A cumulated value that approximates the integral of analog input or output values over time can be calculated and read.

Communications Error Output (Output Units Only)

The values output by Output Units when errors occur can be set for each output.

Temperature Input Unit Features

Moving Average

Temperature Input Units can calculate the average of the past eight input values to produce a stable input value even when the input value is unsteady.

Scaling

Scaling allows values to be converted according to the industry unit required by the user. It reduces the number of operations requiring ladder programming in the Master CPU Unit. Scaling also supports an offset function for compensating for errors in scaled values.

Peak/Bottom Hold

The maximum (peak) and minimum (bottom) values input to Temperature Input Units can be held. These values can then be compared with alarm set values, and flags turned ON accordingly to indicate the status (comparator function).

Top/Valley Hold

The top and valley values for values input to Temperature Input Units can be held. The timing of tops and valleys can be monitored with the Top/Valley Detection Timing Flags. The top and valley values can be compared with alarm set values, and flags turned ON accordingly to indicate the status (comparator function).

Rate of Change

The rate of change for values input to Temperature Input Units can be obtained for each sampling cycle.

Comparator

Values input to Temperature Input Units or values after math processing can be compared to the alarm set values (HH, H, L, and LL), and the result indicated with the Temperature Status Flags. If the result is outside the set range, the Normal Flag (pass signal) is turned ON.

Off-wire Detection

With Temperature Input Units, disconnections can be detected individually for each sensor input. The status can be checked at the Master using the Off-wire Detection Flags.

Input Error Detection Disable

Detection of input errors, including off-wire detection, can be disabled for channels that are not used.

User Adjustment

Input or output values can be adjusted to compensate for errors in the input or output voltage or current resulting from the characteristics or connection methods of the I/O device. Compensation is performed by applying linear conversion based on the points corresponding to 0% and 100%.

Cumulative Counter

A cumulated value that gives the integral of analog input values over time can be calculated and read.

Top or Valley Count

The numbers of times that the top or valley value is reached can be counted, e.g., in an application in which the temperature input value varies in a fixed cycle of temperature change. The host will be notified with a flag when the number of cycles exceeds the set value.

Temperature Zone Counter

The temperature zone counter can be used to measure how long the temperature input value is within a user-set temperature range in 1-second increments. The host will be notified with a flag when the measured value exceeds the set value.

Data Comparison between Channels

The temperature differences between input channels 0 and 1 can be calculated and compared to a set value. The host will be notified with a flag when the temperature difference exceeds a set value.

Counter Unit and Positioning Unit Features

Counter

Each Unit provides one high-speed counter with a 32-bit resolution. Counting is performed in linear fashion, and encoder signals up to 60 kHz can be input with Counter Units and up to 100 kHz can be input with Positioning Units. The Counter Units support 24-V inputs and the Positioning Unit supports either 24-V or line-driver inputs (settable).

Counter Input Modes

The counter can be set to any of the following input modes:

- Phase differential ×1
- Phase differential ×2
- Phase differential ×4
- Pulse/direction
- Up/down

Speed Measurement

The output pulse frequency is measured and can be read from the I/O area at any time.

Digital Inputs

The Counter Unit supports an input that can be set to operate either as a digital input or an encoder Z-signal input. The Positioning Unit provides both a digital input and an encoder Z-signal input.

The digital input can be set to reset the counter, preset the counter, or capture the present counter value. Any of these actions can be set to be performed on the rising or falling edge of the digital signal.

The Z-signal input of the Positioning Unit can be set to reset the counter in various ways.

Digital Outputs

Each Counter Unit provides one digital output and the Positioning Unit provides two digital outputs. A digital output can be used as a general-purpose output, or it can be controlled using a settable counter value comparison range.

Comparison Range

A comparison range can be enabled for the counter value to control a digital output. The output will be turned ON or OFF depending on the relationship between the counter value and the range that is set. Each Counter Unit provides one comparison range.

1-2 Available Units

The following tables list the available GRT1-series Units, categorized by type.

1-2-1 Communications Units

Type	I/O points	Model number	Description
DeviceNet Communications Unit	---	GRT1-DRT	Interface Unit that connects the DeviceNet Unit with the Slice I/O Units
PROFIBUS Communications Unit	---	GRT1-PRT	Interface Unit that connects the PROFIBUS Unit with the Slice I/O Units.

1-2-2 Digital I/O Units

Type	I/O points	Model number	Description
DC Input/Transistor Output Units	4 inputs (NPN)	GRT1-ID4	4 DC inputs
	4 inputs (PNP)	GRT1-ID4-1	
	4 outputs (NPN)	GRT1-OD4	4 transistor outputs
	4 outputs (PNP)	GRT1-OD4-1	
	4 outputs (PNP)	GRT1-OD4G-1	
	4 outputs (PNP)	GRT1-OD4G-3	4 transistor outputs (2 A)
	8 inputs (NPN)	GRT1-ID8	8 DC inputs
	8 inputs (PNP)	GRT1-ID8-1	
	8 outputs (NPN)	GRT1-OD8	8 transistor outputs
	8 outputs (PNP)	GRT1-OD8-1	
	8 outputs (PNP)	GRT1-OD8G-1	
AC Input Units	4 inputs	GRT1-IA4-1	100 to 120 VAC
	4 inputs	GRT1-IA4-2	200 to 240 VAC
Relay Output Unit	2 outputs	GRT1-ROS2	Relay outputs

1-2-3 Analog I/O Units

Type	I/O points	Model number	Description
Analog I/O Units	2 inputs	GRT1-AD2	2 analog inputs
	2 outputs	GRT1-DA2V	2 analog voltage outputs
	2 outputs	GRT1-DA2C	2 analog current outputs
Temperature Input Units	2 inputs	GRT1-TS2P	Resistance thermometer input Type: PT100 (–200 to 850°C) PT100 (–200 to 200°C)
	2 inputs	GRT1-TS2PK	Resistance thermometer input Type: PT1000 (–200 to 850°C) PT1000 (–200 to 200°C)
	2 inputs	GRT1-TS2T	Thermocouple input (R, S, K1, K2, J1, J2, T, E, B, N, L1, L2, U, W, or PL2; switchable)

1-2-4 Counter Units and Positioning Unit

Type	I/O	Model number	Description
Counter Units	• A and B counter inputs • One input settable to Z counter input or digital input • 1 digital output (NPN)	GRT1-CT1	1 counter Max. frequency: 60 kHz (depending on counter input mode)
	• A and B counter inputs • One input settable to Z counter input or digital input • 1 digital output (PNP)	GRT1-CT1-1	
Positioning Unit	• A, B, and Z counter inputs • 1 digital input • 2 digital outputs (PNP)	GRT1-CP1-L	1 counter Max. frequency: 100 kHz (depending on interface and counter input mode)

1-2-5 System Units

Type	I/O points	Model number	Description
Right Turnback Unit	---	GRT1-TBR	Mounts to the right side of the last Unit to add a new block.
Left Turnback Unit	---	GRT1-TBL	Mounts to the left side of the new block. Power is supplied from the Left Turnback Unit.
I/O Power Feed Units	---	GRT1-PD2	Feeds I/O power within the Slice I/O Terminal. 2 voltage terminals and 2 ground terminals
	---	GRT1-PD2G	Feeds I/O power within the Slice I/O Terminal. 2 voltage terminals and 2 ground terminals Overcurrent protection
	---	GRT1-PD8	Feeds I/O power within the Slice I/O Terminal. 8 voltage terminals and 4 ground terminals
	---	GRT1-PD8-1	Feeds I/O power within the Slice I/O Terminal. 4 voltage terminals and 8 ground terminals
I/O Power Connection Units	---	GRT1-PC8	Provides extra voltage and ground terminals. 8 voltage terminals and 4 ground terminals
	---	GRT1-PC8-1	Provides extra voltage and ground terminals. 4 voltage terminals and 8 ground terminals
End Unit	---	GRT1-END	An End Unit must be mounted to the end of the Slice I/O Terminal.

1-2-6 Connecting Cable

Type	I/O points	Model number	Description
Turnback Cable for Slice I/O Units (1 m)	---	GCN2-100	This is a special turnback cable. Up to 2 Turnback Cables (2 m total) can be connected for one Communications Unit.

1-2-7 Functions Supported by Slice I/O Units

Function	GRT1-series Slice I/O Units							
	Digital I/O Units				Analog I/O Units		Temperature Input Units	Counter Units and Positioning Unit
	DC Input Units	AC Input Units	Output Units	Relay Output Units	Input Units	Output Units		
Backup/Restore	Supported							
Online Replacement	Supported							
Automatic Baud Rate Recognition	Supported							
Unit Conduction Time (Power ON Time) Monitor	Supported							
Unit Comments	Supported							
Connected Device Comments	Supported							
Last Maintenance Date	Supported							
Communications Error History Monitor	Supported							
Detachable Terminal Block	Supported							
Total ON Time Monitor	Supported				---			Supported
Contact Operation Counter	Supported				---			Supported
Operation Time Monitor	Supported				---			
I/O Power Supply Monitor	Supported	---	Supported		---			Supported
Input Filter	Supported		---					
Sensor Power ON Delay	Supported		---					
Scaling	---				Supported			---
User Adjustment	---				Supported			---
Cumulative Counter	---				Supported			---
Moving Average	---				Supported	---	Supported	---
Setting the Number of AD Conversion Points	---				Supported	---	---	---
Input Error Detection Disable	---				---	---	Supported	---
Peak/Bottom Hold	---				Supported	---	Supported	---
Top/Valley Hold	---				Supported	---	Supported	---
Rate of Change	---				Supported	---	Supported	---
Comparator	---				Supported	---	Supported	---
Communications Error Output	---		Supported		---	Supported	---	Supported
Temperature Zone Counter	---				---	---	Supported	---
Data Comparison between Channels	---				---	---	Supported	---

1-2-8 Slice I/O Unit Installation and Power Supply Methods

The following installation and power supply methods apply to all GRT1-series Units.

I/O Unit connection	Unit installation	I/O connection	Unit power supply to base block	I/O power supply
Building-block connections with slide connectors on sides of Units	DIN Track installation	Screwless clamping terminal block	Supplied through the Communications Unit or Left Turnback Unit.	Supplied through the Communications Unit, I/O Power Feed Unit, or Left Turnback Unit.

SECTION 2
Shared Specifications and Functions

This section describes the specifications and functions that are shared by all of the Slice I/O Units.

2-1 Specifications Shared by the Units 12
2-1-1 General Specifications 12
2-1-2 Slice I/O Unit Specifications 12
2-1-3 LED Indicators 12
2-2 Unit Numbers and I/O Allocations 13
2-2-1 Unit Numbers of Slice I/O Units (Automatically Allocated) 13
2-2-2 I/O Allocations in the Slice I/O Terminal's Master Unit 14
2-3 Functions Shared by all Units 17
2-3-1 Backup Function 17
2-3-2 Automatic Restore Function 18
2-3-3 Online Replacement Function 19
2-3-4 Unit Conduction Time Monitor 20
2-3-5 Unit Comments 23
2-3-6 I/O Comments 24
2-3-7 Communications Error History Monitor 26
2-3-8 Last Maintenance Date 28

2-1 Specifications Shared by the Units

2-1-1 General Specifications

Item	Specification
Ambient operating temperature	–10 to 55°C (with no icing or condensation)
Ambient operating humidity	25% to 85%
Ambient storage temperature	–25 to 65°C (with no icing or condensation)
Noise immunity	Conforms to IEC61000-4-4, 2.0 kV
Vibration resistance	10 to 60 Hz: 0.7 mm double amplitude 60 to 150 Hz: 50 m/s^2
Shock resistance	150 m/s^2
Withstand voltage	500 VAC (between isolated circuits)
Enclosure rating	IP20

2-1-2 Slice I/O Unit Specifications

Item		Specification
Communications protocol		Slice bus
Communications distance		Slice I/O Units: 64 Units coupled (about 2 m max.) Turnback Cable: 2 m max. (2 cables, 1 m each)
Unit power supply		Voltage: 24 VDC
Unit connection method		Building-block style configuration with slide connectors on sides of Units
Unit number		1 to 64 (automatically allocated)
I/O power supply		Voltage: 24 VDC Current: 4 A max.
Indicators	TS (Two-color LED)	Indicates the Unit's operating status
	IO (One-color LED)	Indicates the I/O status

2-1-3 LED Indicators

The following table shows the meaning of the Unit's TS and I/O indicators, which are common to all of the Slice I/O Units.

The ERR indicators show errors specific to the Unit, such as I/O errors. Any numbers that immediately follow "ERR" indicate the channel number, e.g. ERR0 indicates a Unit that has an error in channel 0.

The TS indicator shows the status of the Slice I/O Unit itself and the I/O indicators show the status of the connected devices.

Name	Color	Status		Meaning	
TS	Green	TS	Lit	Normal status	Normal Unit status Normal network status
		TS	Flashing	Operating	The automatic restore/backup function is operating.
	Red	TS	Lit	Fatal error	Unit hardware error (EEPROM error or WDT error)
		TS	Flashing	Non-fatal error	Communications timeout, incorrect switch setting, etc. Cold junction compensator error (GRT1-TS2T only)
	---	TS	Not lit	No power	• Unit power supply is OFF. • Unit is waiting for initialization. • Unit is being reset.

■ **Digital I/O Units**

The following table shows the meaning of the yellow I/O indicator.

Name	Color	Status		Meaning	
I/O	Yellow		Lit	Normal status	I/O ON
	---		Not lit	---	I/O OFF

The following table shows the meaning of the red ERR indicator.

Name	Color	Status		Meaning	
ERR	Red		Lit	Error	The error depends on the Unit. Refer to specific information for the relative Unit.
	---		Not lit	Normal status	No error has occurred.

2-2 Unit Numbers and I/O Allocations

2-2-1 Unit Numbers of Slice I/O Units (Automatically Allocated)

The numbers used to identify the Slice I/O Units in a Slice I/O Terminal are called the Slice I/O Units' unit numbers. These unit numbers are allocated automatically from left to right starting from #1, when the power is turned ON. It is not necessary for the user to set these numbers.

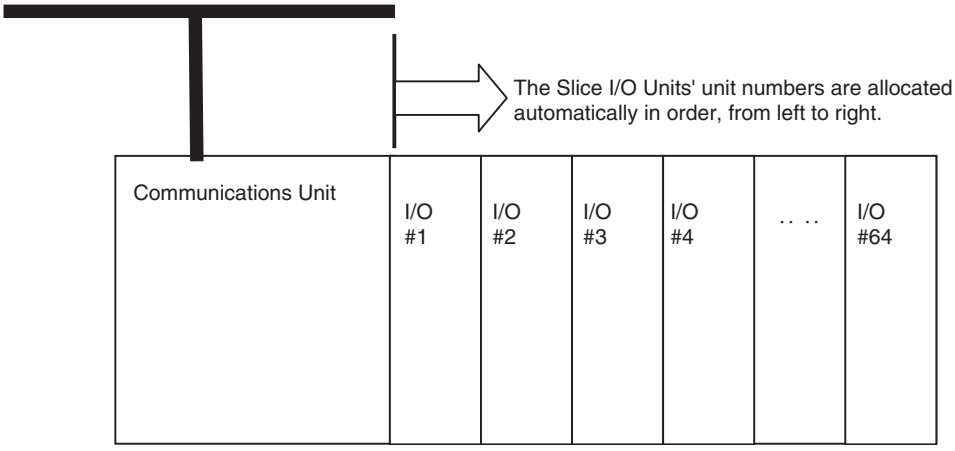

Note The unit numbers allocated automatically to the Slice I/O Units are unrelated to the DeviceNet node address set with the rotary switches.

2-2-2 I/O Allocations in the Slice I/O Terminal's Master Unit

The Slice I/O Terminal's I/O data is allocated in the CPU Unit's I/O memory and transferred through the Communications Unit and the Unit (such as a DeviceNet Unit) connected to the CPU Unit.

The Communications Unit's Programming Device (such as a Configurator) can be used to freely select the kind of data allocated. Refer to the Communications Unit's operation manual for details.

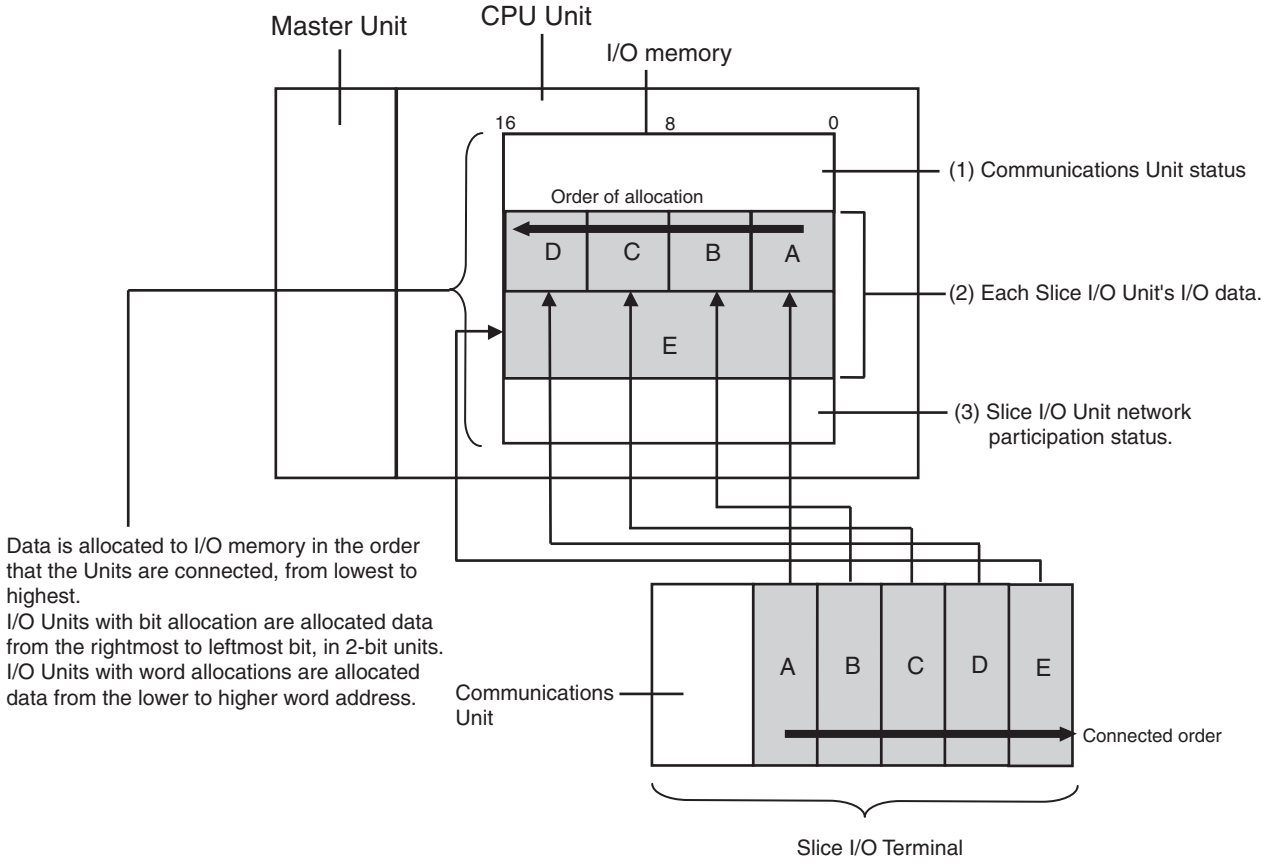

I/O Allocation Example

I/O data is allocated to the I/O Units in the order that they are connected to the Communications Unit, regardless of the I/O Units' models. Unless special allocation data settings are selected with the Communications Unit's Programming Device, data is allocated from the first word starting with the Communications Unit's Status Flags and then the leftmost I/O Unit's data.

Data in the Master's Input and Output Areas is allocated to the Slice I/O Units based on their unit numbers.

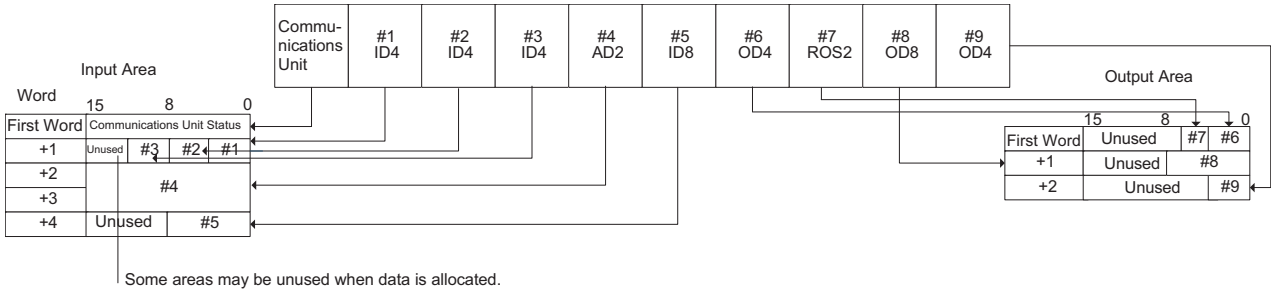

Note I/O Units with bit allocations (such as the GRT1-ID4/OD4) are allocated data in 2-bit units. I/O Units with word allocations (such as the GRT1-AD2) are allocated data in 1-word units. The following example shows the allocations to Output Units.

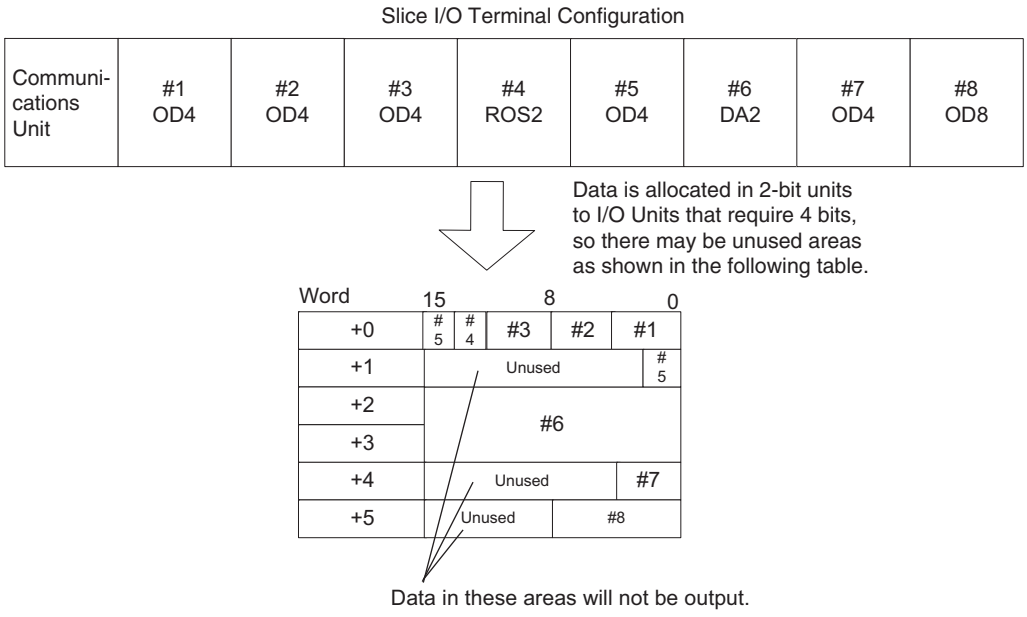

Note As shown in example 1, 0 is entered into any unused area that creates a gap in another area. Such an area cannot be used for any other purpose. If there is more than 1 byte that do not create a gap in any other area, such as in word 4 in example 2, then they can be used for other purposes.

Example Input Area 1 (Total of 10 Bytes)

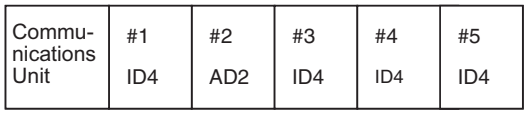

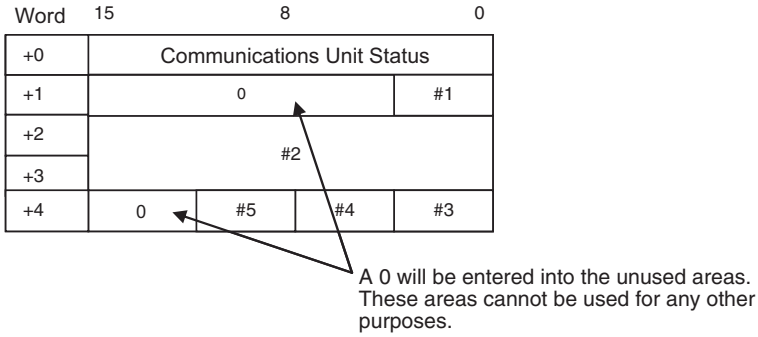

Example Input Area 2 (Total of 9 Bytes)

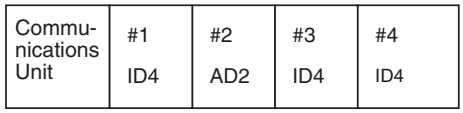

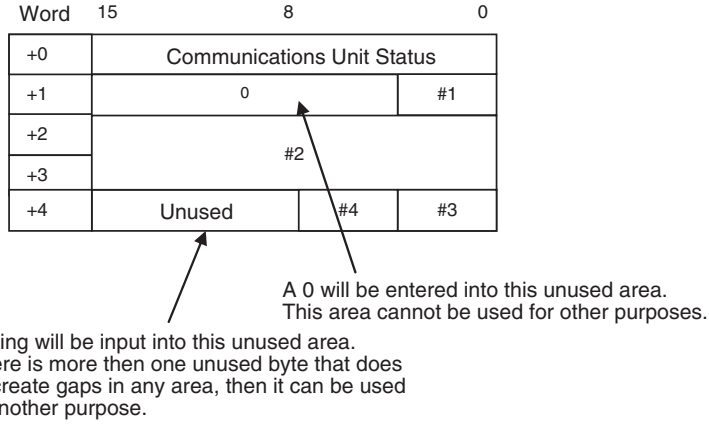

Allocated Data Patterns

The following kinds of data can be allocated for the Master. The Programming Device can be used to freely select the kinds/combination of data allocated. If the Programming Device isn't used to select the data pattern, the default setting is used, which is I/O data + Communications Unit Status Flags (pattern number 1 in the following table).

Input Data Patterns and Sizes

Allocated data pattern	Description
1. Input data + Communications Unit Status Flags	Used input data size + 1 word Maximum Input Area: 65 words (with Communications Unit)
2. Input data only	The total of the bit, word, and used areas. Calculate following the previous example. Maximum Input Area: 64 words (with Communications Unit)
3. Communications Unit Status Flags only	1 word (with Communications Unit)
4. Slice I/O Unit Communications Participating/Withdrawn Flags only	Participating Flags: 4 words Withdrawn Flags: 4 words Total: 8 words

Output Data Patterns and Sizes

Allocated data pattern	Description
Output data only	The total of the bit, word, and used areas. Calculate following the previous example. Maximum Input Area: 64 words (with Communications Unit)

(1) Only one pattern of output data can be allocated.

(2) When allocating data, be sure that it does not exceed the maximum that can be allocated (64 words).

2-3 Functions Shared by all Units

2-3-1 Backup Function

Function Overview

The backup function records the parameter data of all Slice I/O Units connected to the Communications Unit. The parameter data recorded in the Communications Unit can be restored to the Slice I/O Units later with the automatic restore function when a Slice I/O Unit has been replaced.

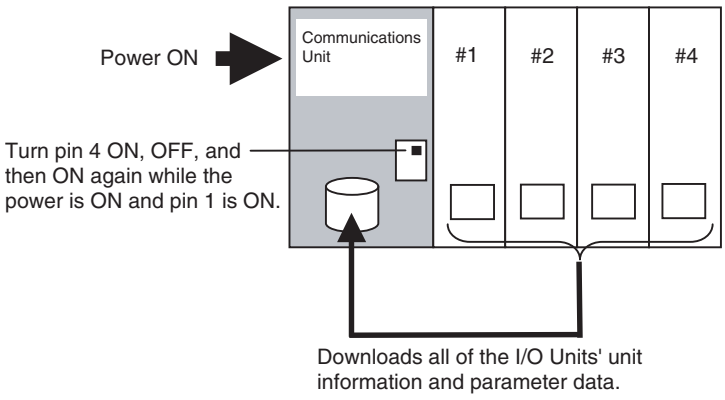

Backup Procedure when using a DeviceNet Communications Unit

1,2,3... 1. Verify that the power is ON, DIP switch pin 1 (REGS) is ON, and all of the Slice I/O Units are participating in I/O communications.

2. Turn DIP switch pin 4 (BACK) ON, then OFF, and then ON again within 3 s to start the back up.
3. While the data is being backed up, the DeviceNet Communications Unit's TS indicator will flash green every 0.5 s. The TS indicator will stop flashing (not lit) when the backup is completed.
   If the restore operation fails, the TS indicator will be lit red for 2 s.

Note

(1) Do not turn OFF the power supply or reset the Configurator while data is being backed up. The data will not be backed up properly if the power is turned OFF.

(2) The backup data will be erased along with the registered I/O configuration table if the power is turned OFF and back ON or if the Unit is restarted while DIP switch pin 1 (REGS) is turned OFF.

(3) We recommend backing up the parameter data in case a Unit fails in the future.

2-3-2 Automatic Restore Function

Function Overview

When a Slice I/O Unit has been replaced, this function will automatically download (restore) Slice I/O Unit parameter data that was previously backed up in the Communications Unit. The following conditions are required to execute the automatic restore function:

- DIP switch pin 1 (REGS) was ON when the power was turned ON, so the registered table is enabled.
- DIP switch pin 3 (ADR) was ON when the power was turned ON, so the automatic restore function is enabled.
- Parameter data has been backed up.

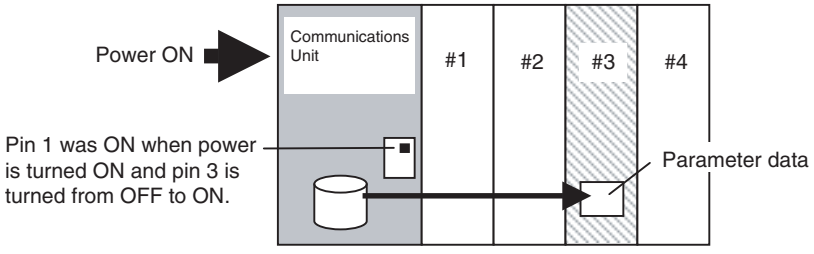

Parameter data is automatically restored only to the Unit that was replaced (same unit number, same model number, different serial number).

Restoration Procedure when using a DeviceNet Communications Unit

1,2,3...

1. Create backup data in the Communications Unit with the backup function.
2. Turn ON DIP switch pin 3 (ADR).

Unit Replacement Procedure

1,2,3...

1. Turn OFF the Slice I/O Terminal's power supply and the I/O power supply.
2. Release the hook on the front of the I/O Unit that you want to replace and remove the terminal block. The wiring can remain connected.
3. Remove the main block of the Slice I/O Unit and replace it with a new I/O Unit.
4. Mount the terminal block that was removed in step 2 and latch the hook that was released.

5. When the power is turned ON again, the Communications Unit will automatically detect the Unit that was replaced and download the backup data. The I/O Unit's TS indicator will indicate the results of the restore operation.
   - If the download was successful, the Unit will be reset automatically and join I/O communications normally. The I/O Unit's TS indicator will be lit green.
   - If the download failed, the I/O Unit's TS indicator will be flash red.
   - If the connected Unit is the wrong model, the I/O Unit's TS indicator will be lit red.

Note

(1) Do not turn OFF the power or reset the Unit from the Configurator while data is being restored. The data will not be restored properly if the power is turned OFF or the Unit is reset.

(2) When an I/O Unit has been replaced with the power ON and the new I/O Unit joins I/O communications, the new Unit will be compared to the previous one and the parameter data restore operation will start automatically. While data is being restored, the DeviceNet Communications Unit's TS indicator will flash green every 0.5 s. The TS indicator will stop flashing (not lit) when the restore operation is completed. If the restore operation fails, the Automatic Restore Monitor Flag (bit 13 of the Communications Unit Status Flags) will be turned ON and the Communications Unit's TS indicator will be lit red for 2 s.

2-3-3 Online Replacement Function

Function Overview

When one of the Slice I/O Units connected to the Communications Unit must be replaced, the Unit can be replaced without turning OFF the Slice Bus Power. Any AC power supplied via the Slice I/O Terminal must always be turned OFF before replacing a Unit.

The Units can be replaced online because the Slice I/O Units are made up of 3 blocks: the base block, main block, and terminal block. When replacing a Slice I/O Unit, leave just the base block connected and replace the main block. I/O communications will continue with the other I/O Units even while the problem Unit is being removed and replaced.

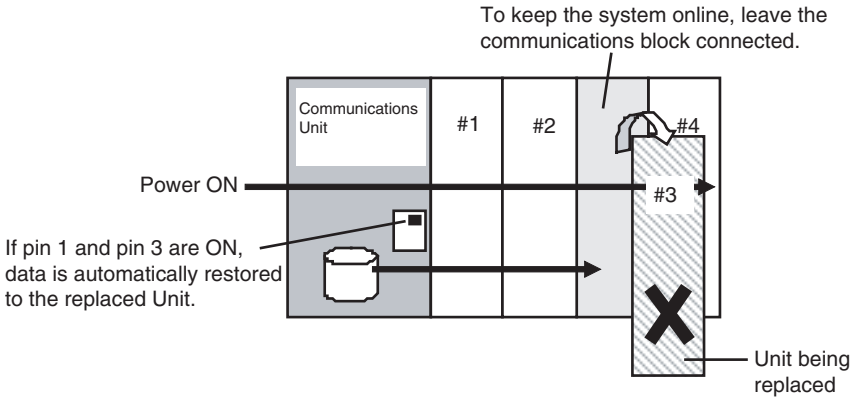

Replacement Procedure

1,2,3...

1. Turn OFF the I/O power supply of the I/O Unit being replaced.
2. Release the hook on the front of the I/O Unit that you want to replace and remove the terminal block. The wiring can remain connected.
3. Remove the main block of the Slice I/O Unit and replace it with a new I/O Unit.

4. Mount the terminal block that was removed in step 2 and latch the hook that was released.
5. Turn ON the I/O power supply.

⚠ **WARNING** Always turn OFF the I/O Unit's I/O power supply before performing online replacement. In addition, if external power is supplied to the terminal block for a Unit such as a Relay Output Unit or AC Input Unit, turn OFF that power supply before replacing the Unit. Not turning OFF these power supplies may result in false output signals, false input signals, or electrical shock.

Note

(1) When a Unit withdraws from I/O communications during replacement, the corresponding Slice I/O Unit Communications Withdrawn Flag will go ON and the Communications Unit's TS indicator will flash red.

(2) Before using the automatic restore function, the preparation for automatic restoration (creating backup data and turning ON DIP switch pin 3) must be completed. Refer to *2-3-2 Automatic Restore Function* for details.

(3) Only replace one I/O Unit at a time.

(4) Always replace the I/O Unit with the same model of I/O Unit. If a Unit is replaced with a different model, there may be unexpected outputs and the restore operation may not be completed properly.

(5) If the base block is faulty or damaged, turn OFF the power supply and replace the entire Unit. Even in this case, the I/O Unit's parameter data will be restored automatically if the automatic restore function is enabled when the power is turned ON.

2-3-4 Unit Conduction Time Monitor

Function Overview

The total ON time (unit: 0.1 hr) of the Unit's internal circuit power can be calculated and recorded.

A monitor value can be set in the Unit so that the corresponding notification flag in the Status Area will be turned ON when the total time reaches the set monitor value, or the power ON time reaches 87672 hours (10 years), in order to notify the Communications Unit. (Bit 2 of the Communication's Unit's Status Flags will go ON.) The total ON time can be read with a Programming Device.

- Measured time: 0 to 429496729 hours (stored data: 00000000 to FFFFFFFF hex)

- Measuring unit: 0.1 hr

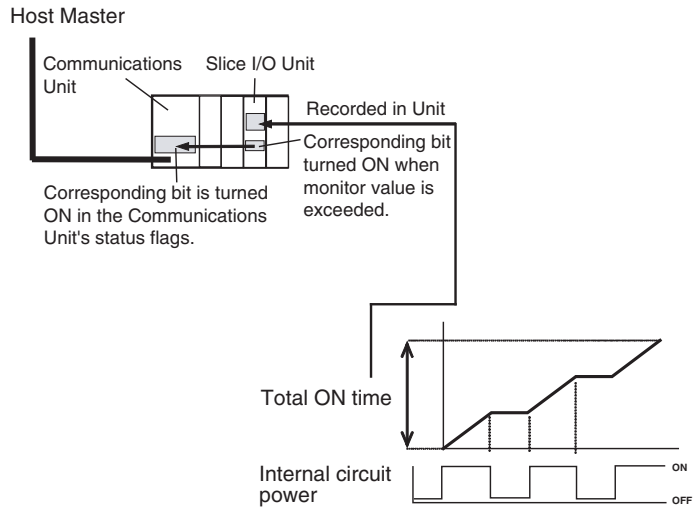

Note

(1) The Unit conduction time monitor (Power ON time monitor) calculates the total time that Network power supply is ON. The total time is not calculated when the power is OFF.

(2) When the power ON time reaches 87672 hours (10 years), the corresponding bit (Unit Maintenance Flag) of the Status Flags turns ON, regardless of the threshold value.

(3) After the power ON time reaches 87672 hours (10 years), the power On time count continues while the power is ON, but when the power is turned OFF and then ON, the count resumes from 87671.

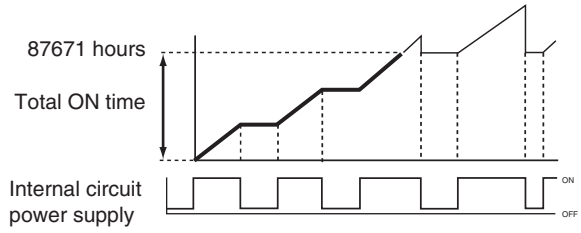

Setting with a Programming Device

This example shows how to use the DeviceNet Configurator (version 2.43 or higher) to set the monitor value for the *Unit Conduction Time*.

1,2,3...

1. Open the Network Configuration Window and double-click the desired Slice I/O Terminal's icon or right-click the icon and select **Parameters - *Edit*** to display the Edit Device Parameters Window.

2. Click the **I/O Module** Tab.

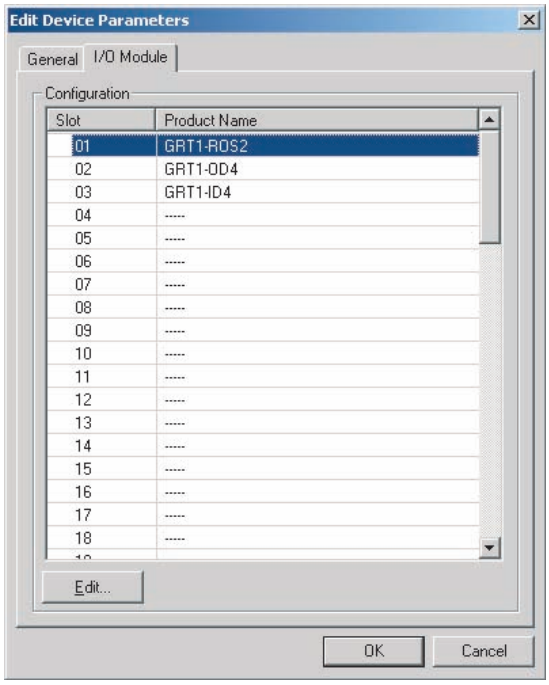

3. Click the **Edit** Button to display the Edit Unit Parameters Window.

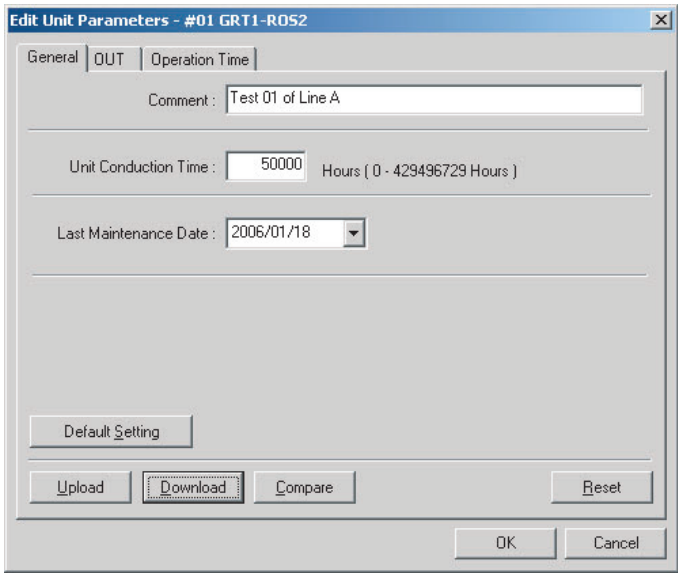

4. Input the desired monitor value in the *Unit Conduction Time* Field.
5. Click the **Download** Button, and then click the **Reset** Button to reset the Unit.
6. Click the **OK** Button.

Note (1) If a value equal to or higher than 87672 hours is set, the Unit Maintenance Flag will turn ON when 87672 hours (10 years) is reached.

2-3-5 Unit Comments

Function Overview

The user can assign and record a name or comment for every Unit (up to 32 characters). The network Programming Device can be used to read and write these Unit names (comments).

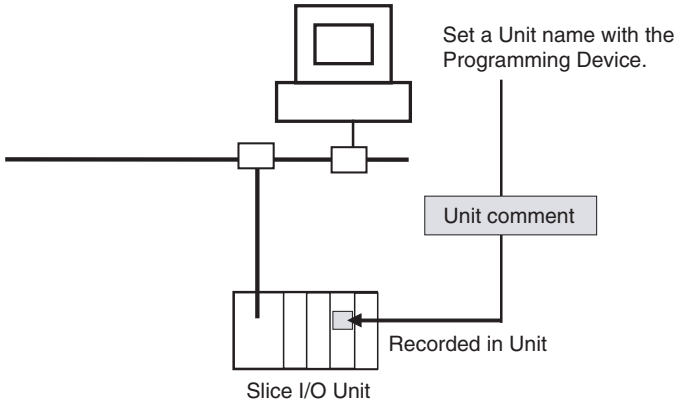

Setting with a Programming Device

This example shows how to use the DeviceNet Configurator (version 2.43 or higher) to set the Unit Comments.

1,2,3...

1. Open the Network Configuration Window and double-click the desired Slice I/O Terminal's icon or right-click the icon and select **Parameters - *Edit*** to display the Edit Device Parameters Window.
2. Click the **I/O Module** Tab.

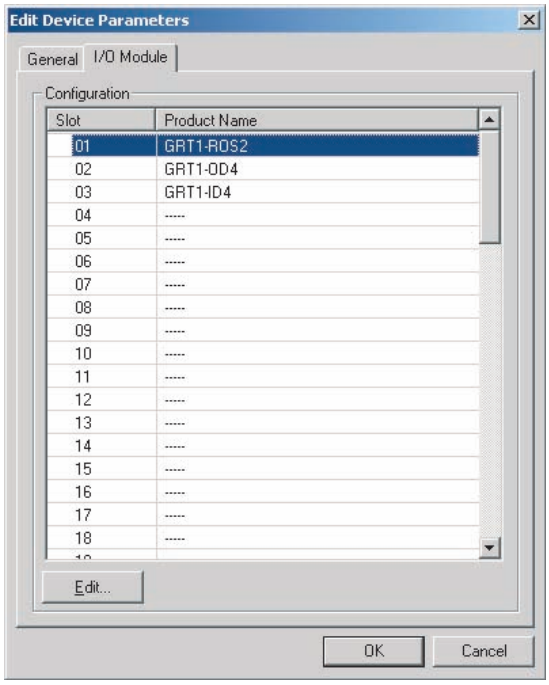

3. Click the **Edit** Button to display the Edit Unit Parameters Window.

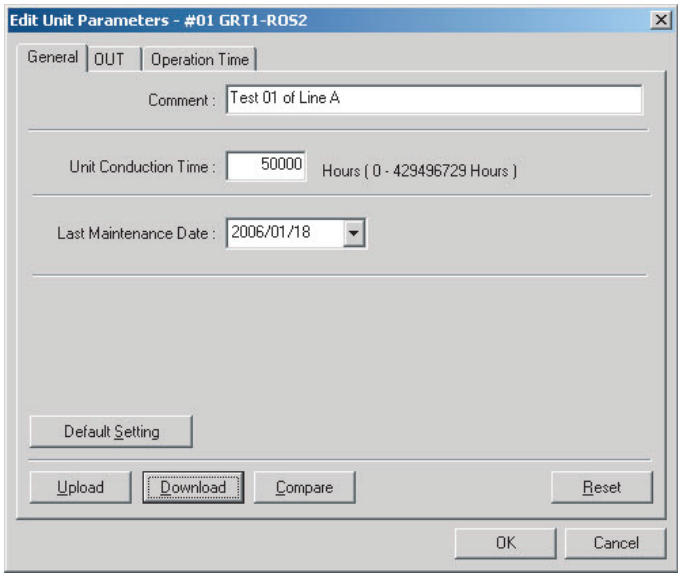

4. Input the desired name in the *Comment* Field.
5. Click the **Download** Button, and then click the **Reset** Button to reset the Unit.
6. Click the **OK** Button.

2-3-6 I/O Comments

Function Overview

The user can assign a name for each of the Unit's I/O contacts (up to 32 characters) and record it in the Unit. The connected device can be checked for each I/O contact, allowing faulty devices to be identified during remote maintenance. The network Programming Device can be used to read and write the names (comments) of the connected devices.

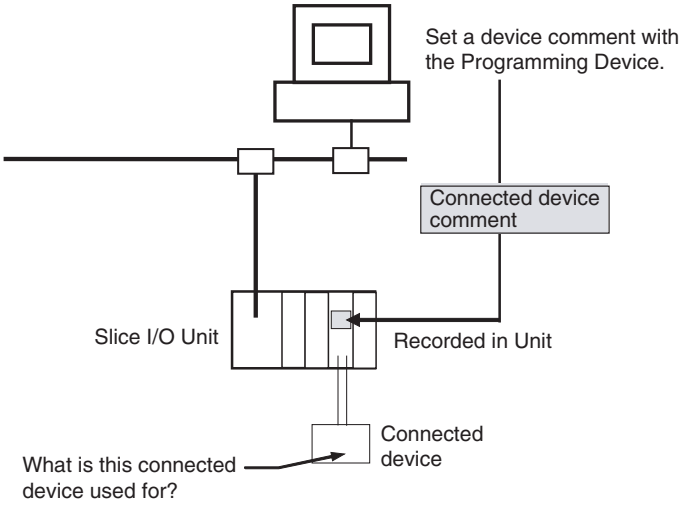

Setting with a Programming Device

This example shows how to use the DeviceNet Configurator (version 2.43 or higher) to set the device comments.

1,2,3...

1. Open the Network Configuration Window and double-click the desired Slice I/O Terminal's icon or right-click the icon and select **Parameters - *Edit*** to display the Edit Device Parameters Window.
2. Select the desired Slice I/O Unit from the list on the *I/O Module* Tab Page and click the **Edit** Button.
3. Select the **IN** Tab or **OUT** Tab. (In this case, the **IN** Tab has been selected.)

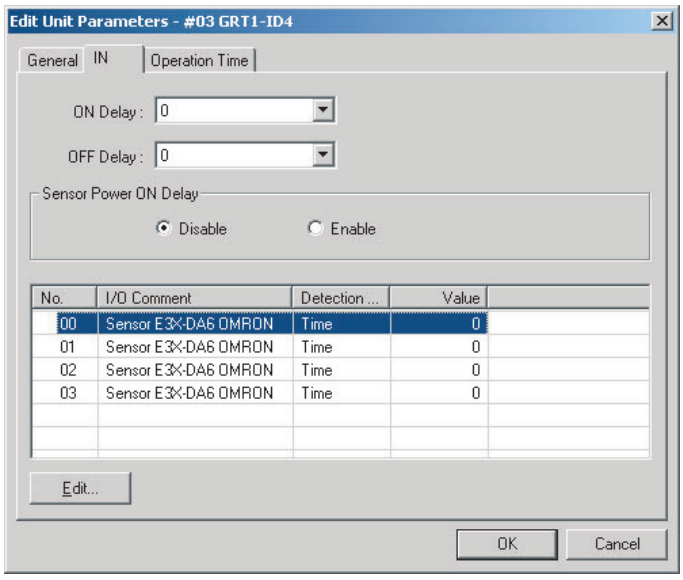

4. Select the connected device that requires a comment and double-click the **I/O Comment** Column to display the following window. Input the desired name and click the **OK** Button.

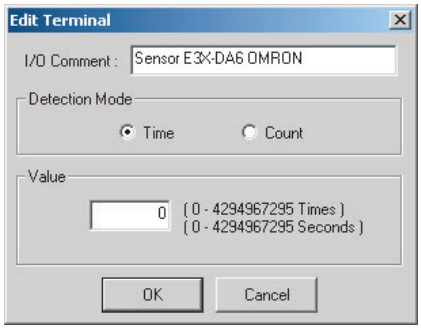

5. Click the **General** Tab.
6. Click the **Download** Button, and then click the **Reset** Button to reset the Unit.
7. Click the **OK** Button.

2-3-7 Communications Error History Monitor

Function Overview

Information on communications error (communications error code, communications power voltage when the error occurred) for the last four communications errors can be recorded in the Unit. The network Programming Device can be used to read that communications error history.

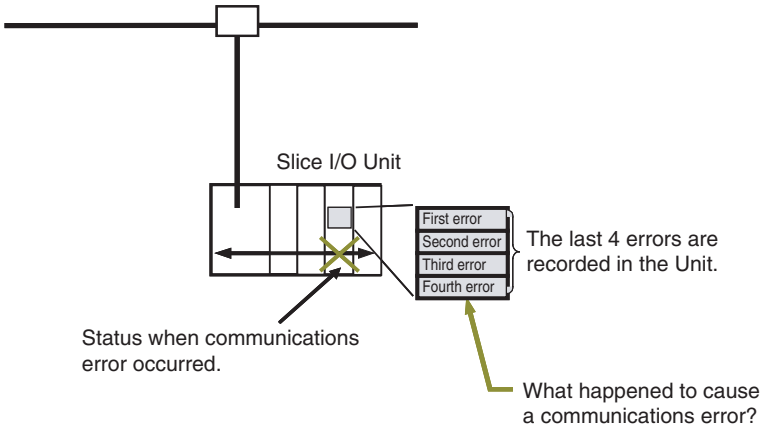

Reading with a Programming Device

This example shows how to use the DeviceNet Configurator (version 2.43 or higher) to check the error information.

1. Open the Network Configuration Window, right-click the desired Slice I/O Terminal's icon, and select **Maintenance Information** from the pop-up menu.

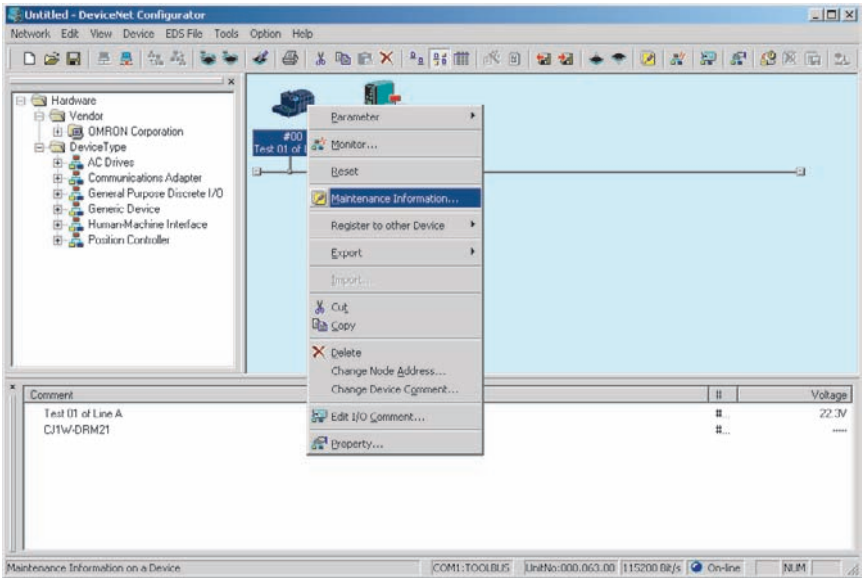

2. Select the desired Slice I/O Unit from the list on the *I/O Module* Tab Page and click the **View** Button.

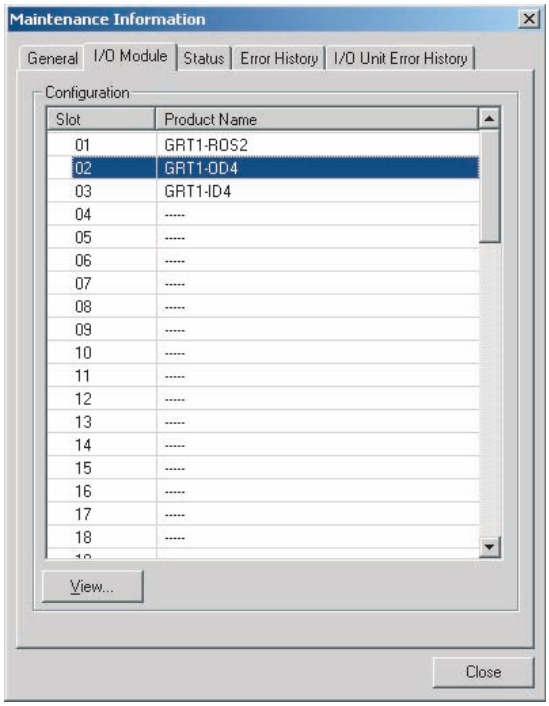

3. Select the **Error History** Tab in the Maintenance Information Window. The communications error history for the last four errors will be displayed, as shown in the following window.

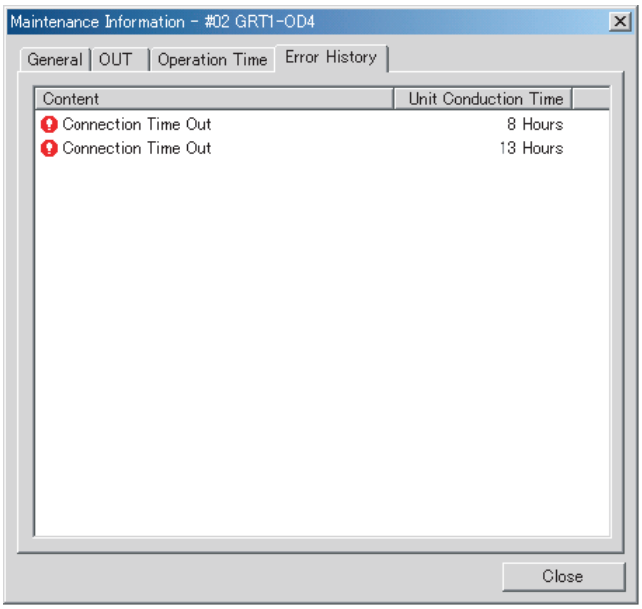

2-3-8 Last Maintenance Date

Function Overview

This function can be used to write the date on which maintenance was last performed to the Unit. This means that the timing for future maintenance can be judged more easily. The date can be written using the network Programming Device.

Setting with a Programming Device

This example shows how to use the DeviceNet Configurator (version 2.43 or higher) to check the last maintenance date.

1,2,3...

1. Open the Network Configuration Window and double-click the desired Slice I/O Terminal's icon or right-click the icon and select **Parameters - *Edit*** to display the Edit Device Parameters Window.
2. Select the desired Slice I/O Unit from the list on the *I/O Module* Tab Page and click the **Edit** Button.
3. Click the **General** Tab and select the desired date from the pull-down menu in the *Last Maintenance Date* Field. (Click the **Today** Button to enter the current date.)

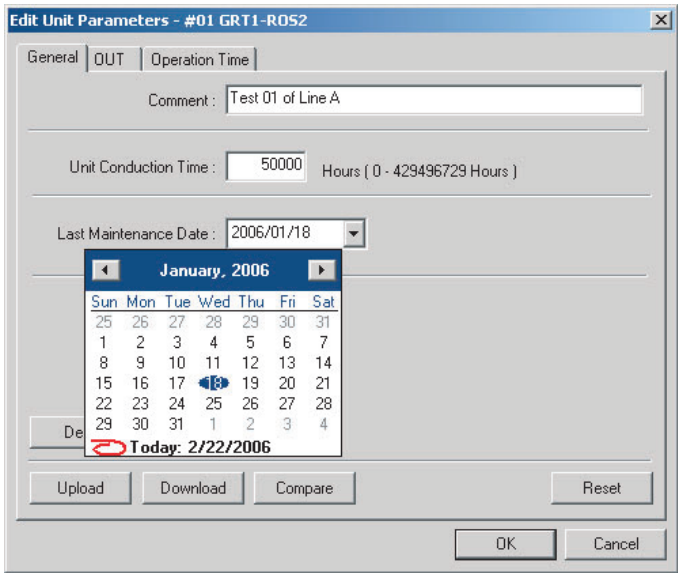

4. Click the **Download** Button, and then click the **Reset** Button to reset the Unit.
5. Click the **OK** Button.

SECTION 3
Installation and Wiring

This section provides information on installing and wiring the Slice I/O Units.

3-1 Installation 30
3-1-1 Connecting the Communications Unit and Slice I/O Units 30
3-1-2 Connecting Additional Slice I/O Units 31
3-1-3 Installation on a DIN Track 32
3-2 Power Supply Wiring 36
3-2-1 Connecting the Slice I/O Terminal Power Supply 37
3-2-2 Wiring Methods 39
3-3 Connecting Turnback Cables 40
3-3-1 Connecting Turnback Units 41

3-1 Installation

The Slice I/O Terminal is installed and set up as a network Slave. The Communications Unit's communications connector connects to the Master Unit through a communications cable.

Up to 64 Slice I/O Units can be connected to one Communications Unit.

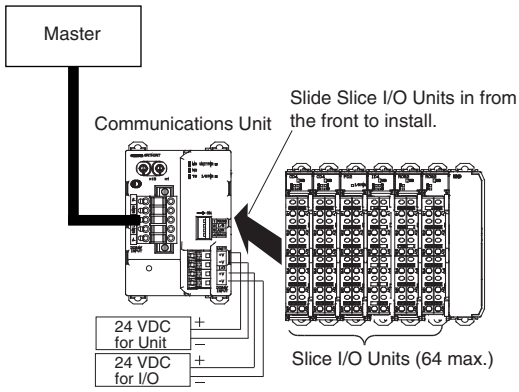

Note (1) Do not connect or disconnect the Communications Unit's communications cable while the network is operating. Short-circuits or poor contacts in the cable may prevent normal communications.

(2) Be sure that the power supplies for the Communications Unit, Slice I/O Units connected to the Communications Unit, and external I/O are wired correctly through the Communications Unit's terminal block.

3-1-1 Connecting the Communications Unit and Slice I/O Units

Connect the first Slice I/O Unit to the Communications Unit by aligning the sides of the Units and sliding in the Slice I/O Unit from the front. Additional Slice I/O Units can be connected consecutively to the first.

In the following example, a Slice I/O Unit is being connected to a DeviceNet Communications Unit.

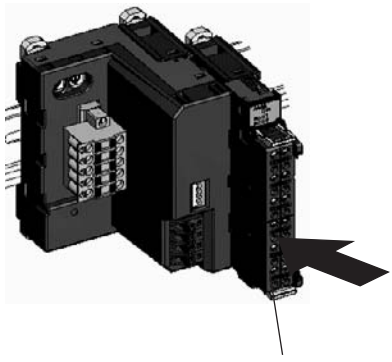

Slide the Slice I/O Unit toward the DIN Track from the front. Insert the Unit until you hear a click, which indicates that the Unit has locked on the Track. It is not normally necessary to release the DIN Track mounting hook when mounting the Unit.

Note Do not touch the connector on the Unit's base block.

3-1-2 Connecting Additional Slice I/O Units

Connect additional Slice I/O Units by aligning the sides of the Units and sliding in the next Unit from the front. Up to 64 Slice I/O Units can be connected to one Communications Unit.

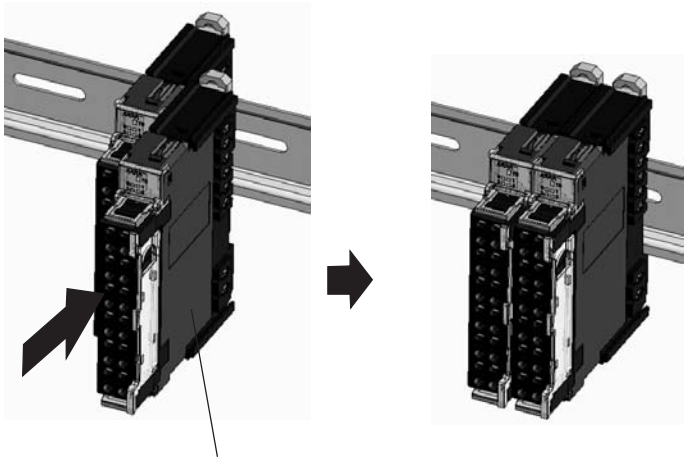

Slide the Unit to the DIN Track from the front.
Insert the Unit until you hear a click, which indicates that the Unit has locked on the Track.
It is not normally necessary to release the DIN Track mounting hook when mounting the Unit.

Connecting Turnback Units

When a Slice I/O Terminal is divided into blocks, connect a GRT1-TBR Right Turnback Unit to the right end of the first block. Connect a GRT1-TBL Left Turnback Unit to the left side of the expansion block and connect additional Slice I/O Units. Use a GCN2-100 Turnback Cable to connect the Turnback Units together.

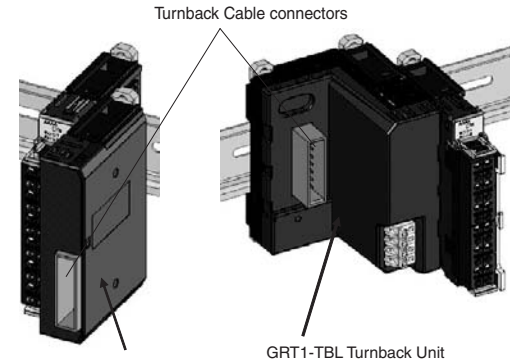

Note The Turnback Units can be used to divide a Slice I/O Terminal into up to three blocks.

Connecting the End Unit

A GRT1-END End Unit must be connected to the end of the Slice I/O Terminal.

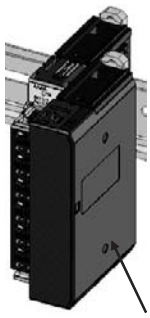

GRT1-END End Unit

Note When connecting Units, always align the guide tracks on the top and bottom of the Units and be sure that they join properly as you slide the Unit toward the DIN Track.

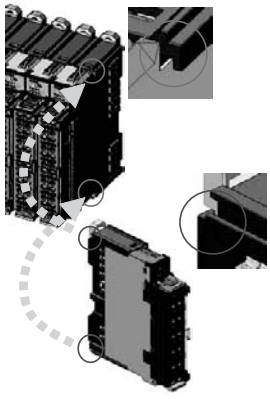

3-1-3 Installation on a DIN Track

DIN Track Installation

Mount the Communications Unit and Slice I/O Units on a DIN Track. Attach the DIN Track with screws in every fourth mounting hole.

PFP-50N (50 cm) or PFP-100N (100 cm) DIN Track

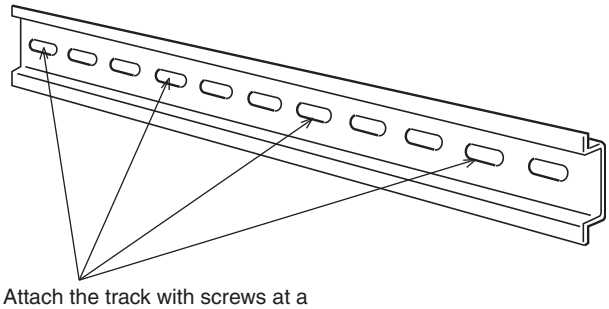

Attach the track with screws at a maximum spacing of 105 mm between adjacent screws.

PFP-M End Plate (Two Required)

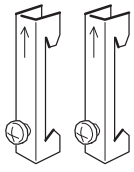

Slice I/O Terminal Orientation

There is no particular restriction on the Slice I/O Terminal's orientation. The Terminal can be mounted in any of the following 6 directions.

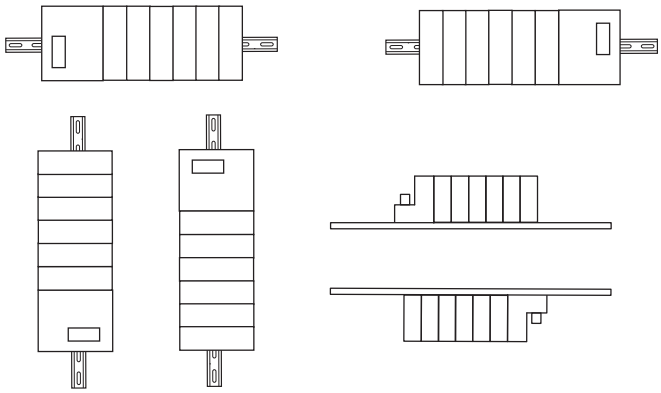

Installing a Unit

Press the Units onto the DIN Track firmly from the front. Press the Unit firmly until it clicks, indicating that the Unit's DIN Track Mounting Hooks have locked onto the DIN Track.

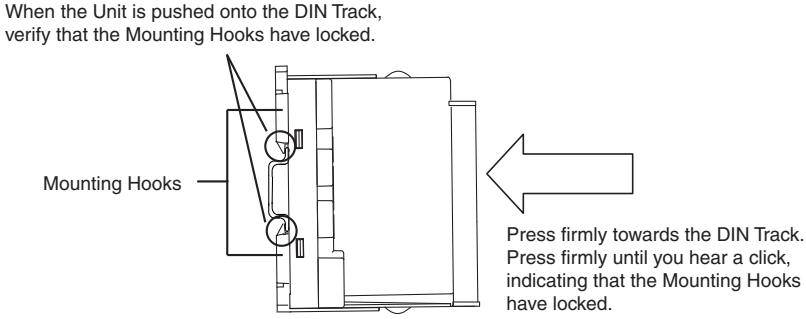

Note It is not normally necessary to release the DIN Track mounting hook when mounting the Unit. When the Units are installed on a DIN Track other than the recommended track, the Mounting Hooks may not lock onto the track completely. In that case, release the Mounting Hook locks, mount the Unit on the DIN Track again, and lock the Mounting Hooks.

Slice I/O Unit Structure

The Slice I/O Units are made up of 3 blocks. Each block can be removed for replacement.

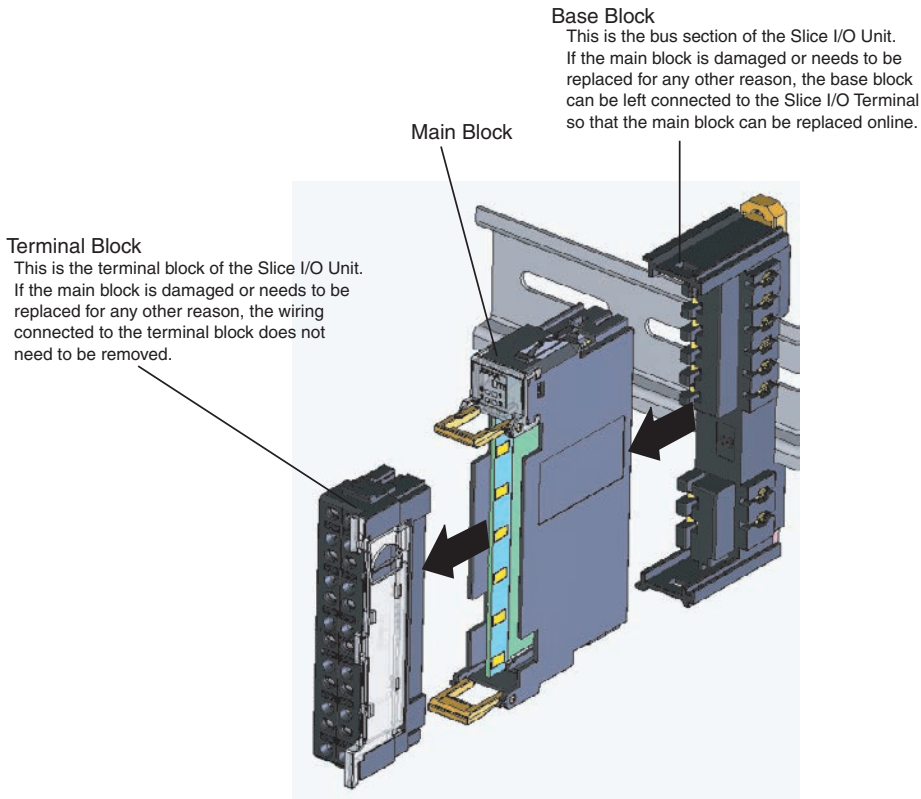

Removing a Unit

Use a standard screwdriver to release the DIN Track Mounting Hooks at the top and bottom of the Unit and pull the Unit straight away from the DIN Track.

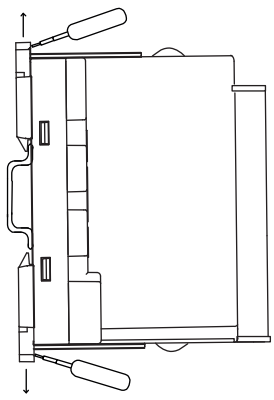

Removing an Entire Unit Including the Base Block

1,2,3...

1. Remove the main block of the Unit on the right side of the Slice I/O Unit actually being replaced.
2. Release the Mounting Hook locks of the Unit being replaced. (The hooks attach the Unit to the top and bottom of the DIN Track.)
3. Pull the Unit straight away from the DIN Track.

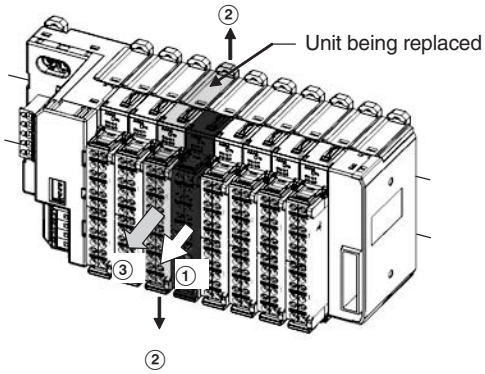

Removing Just a Unit's Main Block

Press the latches on the top and bottom of the main block and pull the block forward.

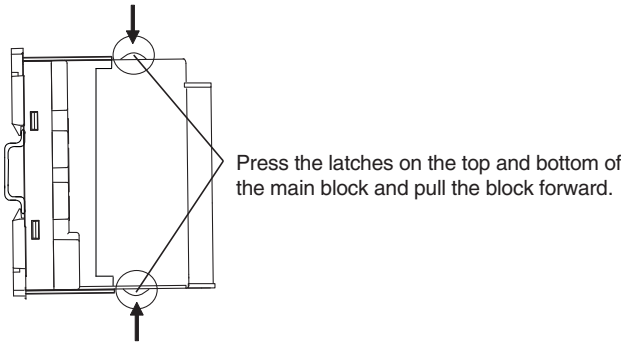

Removing Only the Terminal Block

Release the hooks on the top and bottom of the terminal block and pull out the terminal block.

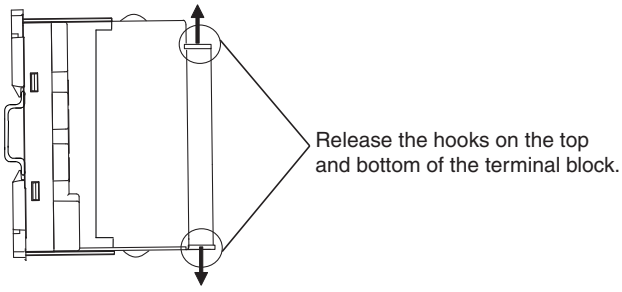

Installing the End Plates

Always secure the Slice I/O Terminal on the DIN Track by installing End Plates on both sides of the Terminal. First hook the bottom of the End Plate on the bottom edge of the DIN Track (1), attach the top of the End Plate, and pull the End Plate down onto the top edge of the DIN Track (2).

Tighten the End Plate's securing screw.

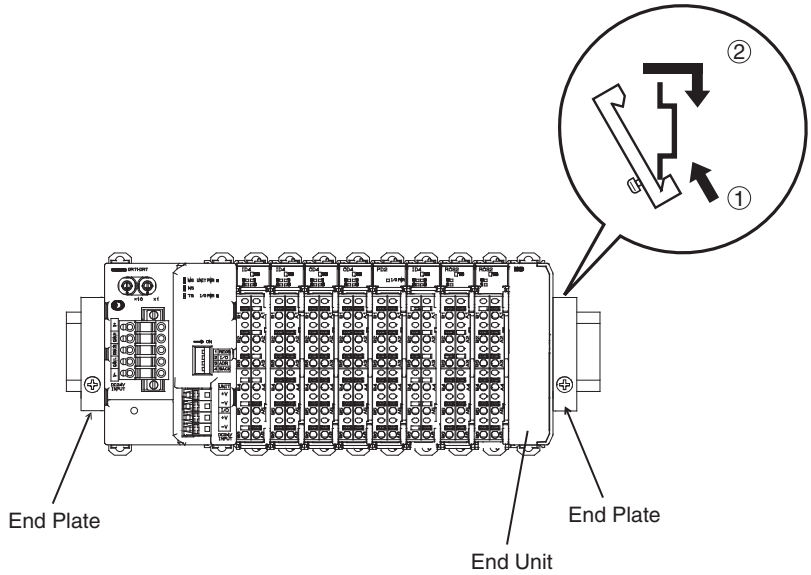

Note Always secure the Slice I/O Terminal by attaching End Plates on both ends.

3-2 Power Supply Wiring

Both the Slice I/O Terminal power supply and the external I/O power supply are connected with screwless clamp terminals on the Communications Unit.

The following I/O Power Feed Units and I/O Power Connection Units are available. Select the Unit depending on the application. For information on wiring for the GRT1-PD8(-1) and GRT1-PC8(-1), refer to the wiring examples for the GRT1-ID8(-1) and GRT1-OD8(-1) in *SECTION 4 Digital I/O Units*.

Unit	Description
GRT1-PD2 GRT1-PD2G	Used to feed external power to the Units. (The GRT1-PD2G has overcurrent protection.)
GRT1-PD8(-1)	Used to feed external power to the Units and provide more common terminals. Use this Unit if there are not enough common terminals, for example, when using the GRT1-ID8(-1) or GRT1-OD8(-1).
GRT1-PC8(-1)	Used to provide more common terminals. Use this Unit if more common terminals are required, for example, when using the GRT1-ID8(-1) or GRT1-OD8(-1). This Unit cannot be used to feed external power.

3-2-1 Connecting the Slice I/O Terminal Power Supply

The Communications Unit has two sets of power supply terminals for the following two systems.

Power supply terminals	Description
Unit power supply terminals	These terminals supply power to the Communications Unit's internal circuits as well as the connected Slice I/O Units' internal circuits (supplied through the Slice bus).
I/O power supply terminals	These terminals supply power to the external I/O that is connected to the Terminal's Slice I/O Units.

Evaluating the Power Supply Requirements

Unit Power Supply

The maximum power consumption for a Slice I/O Terminal is 80 W per block.

1,2,3...

1. Calculate the power consumption of all of the Slice I/O Units connected to the Communications Unit.
2. If the power consumption exceeds 80 W, mount a Right Turnback Unit (GRT1-TBR) on the Slice I/O Unit at the point where the power consumption is less than 80 W.
3. Connect the 24 VDC Unit power supply to the Left Turnback Unit (GRT1-TBL).

Power Consumption of Slice I/O Units

For details on the power consumption of the various Slice I/O Units, refer to *Appendix C Power Consumption and Weight Tables*.

Note

(1) There is a small amount of electrical resistance in the connections between the Slice I/O Units. This can result in a voltage drop of up to 2 V when 64 Slice I/O Units are connected at 4 A. Consider this voltage drop when designing the system.

(2) When dividing the power supply, always wire (supply) the power from the same power supply. (Refer to the following wiring example.)

I/O Power Supply

The maximum I/O current consumption is 4 A.

1,2,3...

1. Calculate the total current consumption used by all external I/O of the connected Slice I/O Units (including other Units such as Turnback Units, but excluding the GRT1-OD4G-3, which has a separate I/O power supply connection).
2. If the current consumption exceeds 4 A or you want to provide separate systems for inputs and outputs, divide the Slice I/O Units at the desired point with a GRT1-PD2, GRT1-PD2G, GRT1-PD8 or GRT1-PD8-1 I/O Power Feed Unit, and provide a separate external I/O power supply.
3. It is also possible to provide a separate external I/O power supply at a Left Turnback Unit (GRT1-TBL).

I/O Current Consumption of Slice I/O Units

For details on the I/O current consumption of the various Slice I/O Units, refer to *Appendix D I/O Current Consumption Table*.

Note

(1) Always use isolated power supplies for the power supplies.

(2) Power is not supplied through the GCN2-100 Turnback Cable. (Refer to the following wiring example.)

Wiring Example

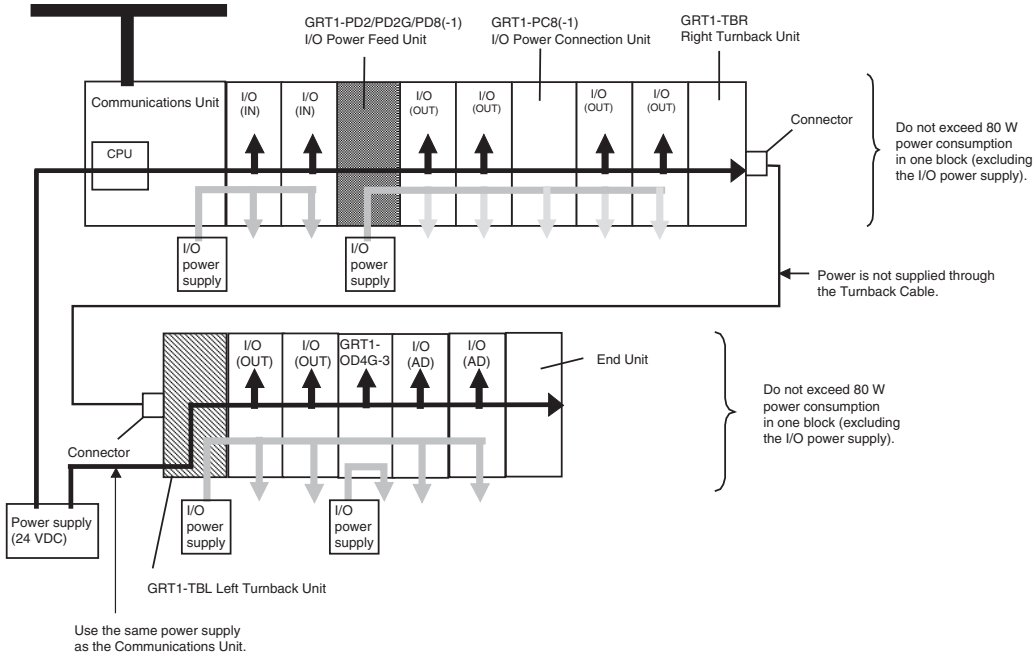

3-2-2 Wiring Methods

Supplying Power to the Units

Connect the power supply wires (24 VDC) to the Communications Unit's screwless clamping power supply terminals. If pin terminals are used on the wire ends, the pin terminals can just be inserted to wire the power.

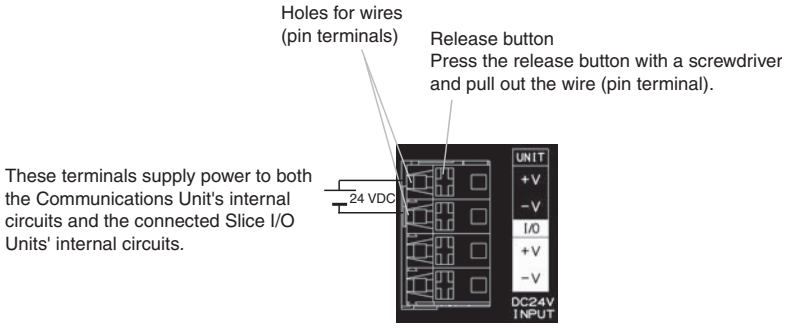

Note The GRT1-TBL Left Turnback Unit has the same screwless clamping power supply terminals. Those terminals are wired in the same way as the Communications Unit's terminals, just by inserting the power supply wires.

Supplying Power to External I/O

The power supply for external I/O devices is supplied through the Communications Unit's screwless clamping power supply terminals. If pin terminals are used on the wire ends, the pin terminals can just be inserted to wire the power.

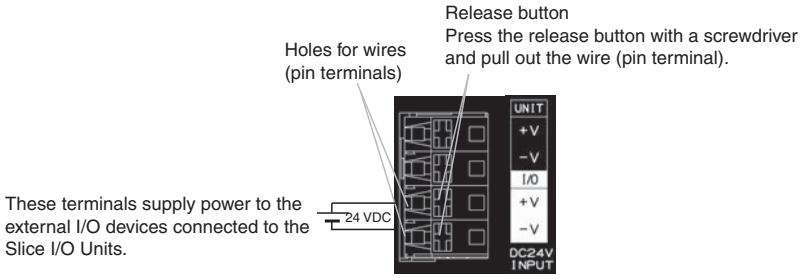

Note

(1) The GRT1-TBL Left Turnback Unit has the same screwless clamp terminals for the power supply. Those terminals are wired in the same way as the Communications Unit's pin terminals, just by inserting the power supply wires.

(2) The GRT1-PD2 I/O Power Feed Unit, GRT1-PD8 I/O Power Feed Unit, and other Units use different terminals from the Communications Unit and the GRT1-TBL. For information on the wiring procedure, refer to *4-3 I/O Wiring*. For information on the recommended power supply, refer to *Recommended Power Supplies* on page 40.

Removing Wires

Press the release button above the terminal hole with a slotted precision screwdriver and pull out the wire.

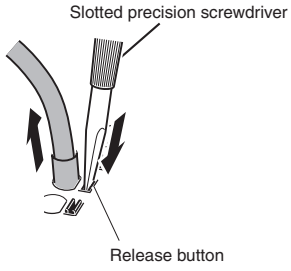

Use the following screwdriver or an equivalent to remove the wires.

Recommended Screwdriver

Model	Maker
SZF1	Phoenix Contact

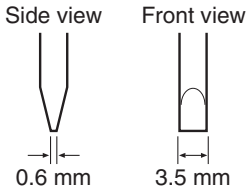

Recommended Power Supplies

Use a SELV power supply with overcurrent protection.

A SELV power supply has redundant or increased insulation between the I/O, an output voltage of 30 Vr.m.s and a 42.4-V peak or maximum of 60 VDC.

Recommended power supply: S82K-10024 (OMRON) or S82J-10024D (OMRON)

Recommended Wire

Type	Gauge
Stranded wire	20 AWG to 16 AWG (0.5 to 1.25 mm^2)
Solid wire	
Pin terminal	

Strip Length

Strip between 7 and 10 mm of insulation at the ends of the wires (stranded or solid wire).

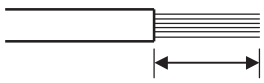

Strip 7 to 10 mm.

Pin Terminal Length

Use pin terminals with a pin (conductor) length of 8 to 10 mm.

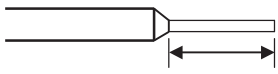

Pin length: 8 to 10 mm

3-3 Connecting Turnback Cables

When a Slice I/O Terminal is divided into blocks to expand the system, connect a GRT1-TBR Right Turnback Unit to the GRT1-TBL Left Turnback Unit with a GCN2-100 Turnback Cable.

Note Power is not supplied through the GCN2-100 Turnback Cable. Always wire (supply) the power to the GRT1-TBL Left Turnback Unit from the same power supply that supplies the Communications Unit.

3-3-1 Connecting Turnback Units

Connect Turnback Units with Turnback Cable, as shown in the following diagram. A single Communications Unit can be expanded with up to two sets of Right/Left Turnback Units.

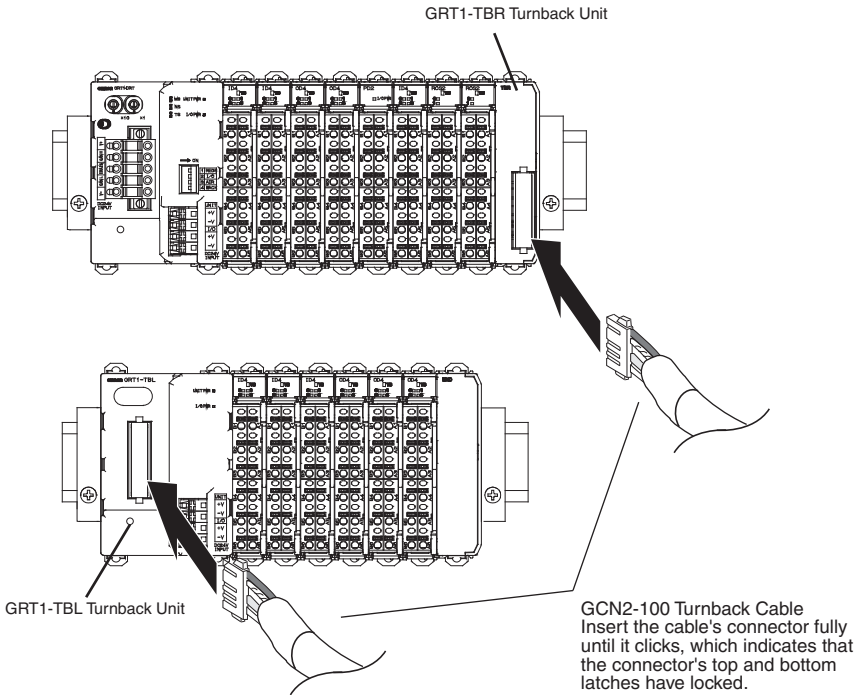

SECTION 4
Digital I/O Units

This section provides the specifications and shows the components, terminal arrangements, wiring diagrams, and dimensions for the Digital I/O Units.

4-1 Overview 44
4-1-1 Specifications Shared by the Units 44
4-1-2 I/O Data 44
4-2 Status Area 45
4-2-1 Status Areas of Digital I/O Units 45
4-3 I/O Wiring 47
4-3-1 Wiring to the Screwless Clamping Terminal Block 47
4-4 Functions of Digital I/O Units 48
4-4-1 I/O Power Supply Monitor 48
4-4-2 Input Filter (Input Units Only) 49
4-4-3 Sensor Power ON Delay (Input Units Only) 52
4-4-4 Contact Operation Counter 53
4-4-5 Total ON Time Monitor 55
4-4-6 Operation Time Monitor 58
4-4-7 Output Hold/Clear Setting 59
4-5 Maintenance Information Window 60
4-5-1 Checking Maintenance Information 60
4-6 Digital I/O Units 64
4-6-1 Four-point DC Input Units: GRT1-ID4 (NPN) and GRT1-ID4-1 (PNP) 64
4-6-2 Four-point Transistor Output Units: GRT1-OD4 (NPN), GRT1-OD4-1 (PNP), GRT1-OD4G-1 (PNP), GRT1-OD4G-3 (PNP) 67
4-6-3 Eight-point DC Input Units: GRT1-ID8 (NPN) and GRT1-ID8-1 (PNP) 73
4-6-4 Eight-point Transistor Output Units: GRT1-OD8 (NPN), GRT1-OD8-1 (PNP), and GRT1-OD8G-1 (PNP) 79
4-6-5 Two-point Relay Output Unit: GRT1-ROS2 84
4-6-6 Four-point AC Input Units: GRT1-IA4-1 and GRT1-IA4-2. 86

4-1 Overview

4-1-1 Specifications Shared by the Units

The following tables show the specifications common to all of the Digital I/O Units. For details on other specifications, refer to the pages describing the individual Slice I/O Unit.

Specifications

Item	Specification
Unit power supply voltage	24 VDC (20.4 to 26.4 VDC)
I/O power supply voltage	24 VDC (20.4 to 26.4 VDC)
Noise immunity	Conforms to IEC61000-4-4, 2.0 kV (power supply line)
Vibration resistance	10 to 60 Hz: 0.7 mm double amplitude 60 to 150 Hz: 50 m/s^2
Shock resistance	150 m/s^2
Withstand voltage	500 VAC (between isolated circuits)
Insulation resistance	20 MΩ min. (between isolated circuits)
Ambient operating temperature	–10 to 55°C (with no icing or condensation)
Ambient operating humidity	25% to 85%
Operating environment	No corrosive gases
Ambient storage temperature	–25 to 65°C (with no icing or condensation)
Mounting	35-mm DIN Track mounting

Note Some specifications are different for the GRT1-ROS2 Relay Output Unit. For details, refer to *4-6-5 Two-point Relay Output Unit: GRT1-ROS2*.

4-1-2 I/O Data

The following table lists the I/O data allocated to each Digital I/O Unit. Refer also to *2-2-2 I/O Allocations in the Slice I/O Terminal's Master Unit*.

Unit name	I/O allocation	Size	Remarks
GRT1-ID4	Bits	4 input bits	---
GRT1-ID4-1	Bits	4 input bits	---
GRT1-IA4-1	Bits	4 input bits	---
GRT1-IA4-2	Bits	4 input bits	---
GRT1-OD4	Bits	4 output bits	---
GRT1-OD4-1	Bits	4 output bits	---
GRT1-OD4G-1	Bits	4 output bits	---
GRT1-OD4G-3	Bits	4 output bits	---
GRT1-ROS2	Bits	2 output bits	---
GRT1-ID8	Word	1 input word	Bits 8 to 15 are not used.
GRT1-ID8-1	Word	1 input word	Bits 8 to 15 are not used.
GRT1-OD8	Word	1 output word	Bits 8 to 15 are not used.
GRT1-OD8-1	Word	1 output word	Bits 8 to 15 are not used.
GRT1-OD8G-1	Word	1 output word	Bits 8 to 15 are not used.

4-2 Status Area

4-2-1 Status Areas of Digital I/O Units

The Digital I/O Units have two status areas. Each Unit's Status Flags are turned ON and OFF based on the threshold/monitor values set for the function in that Unit. A flag in the Communications Unit will be turned ON only when the corresponding flag has been turned ON in one of those status areas.

The Communications Unit's Status Flag information is transmitted to the Master. The I/O Unit's status area information can be read from a Programming Device.

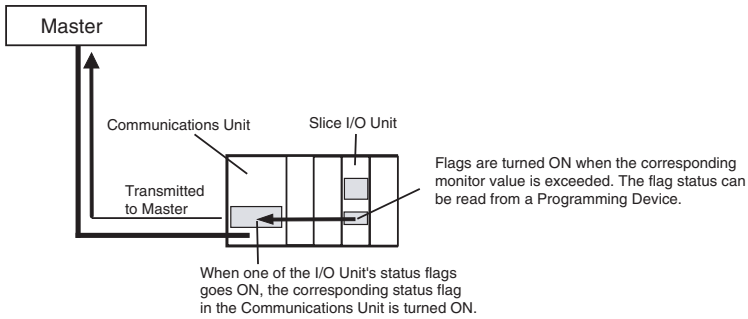

Warning Status Area

The Slice I/O Unit's Warning Status Area contains the following 16 bits. The Warning Status Area provides notification of minor errors detected in the Unit. When any of these flags goes ON, bit 2 of the Communications Unit's Status Flags is turned ON and that information is transmitted to the Master.

Bit	Content	Description
0	Reserved	---
1	Reserved	---
2	Reserved	---
3	Unit Maintenance Flag OFF: Normal ON: Error (Over threshold or 87672 hours)	Monitors the power ON time warning value set for the Unit Conduction Time Monitor function. Also monitors whether 87672 hours (10 years) have elapsed.
4	Reserved	---
5	Reserved	---
6	Reserved	---
7	Reserved	---
8	Operation Time Monitor Flag OFF: Within range (below set value) ON: Out-of-range (exceeded set value)	Monitors whether the operating time for the specified I/O bits is within the warning value set for the Operation Time Monitor function.
9	Connected Device Maintenance Flag OFF: Within range (all points below set value) ON: Out-of-range (one or more points exceeded set value)	Monitors the warning value set for the Contact Operation Counter or Total ON Time Monitor function.
10	Reserved	---
11	Reserved	---
12	Reserved	---
13	Reserved	---

Bit	Content	Description
14	Reserved	---
15	Reserved	---

Alarm Status Area

The Slice I/O Unit's alarm status area contains the following 16 bits. The Alarm Status Area provides notification of serious errors detected in the Unit. When any of these flags goes ON, bit 3 of the Communications Unit's Status Flags is turned ON and that information is transmitted to the Master.

Bit	Content	Description
0	Reserved	---
1	EEPROM Data Error Flag	OFF: Normal ON: Error occurred
2	Reserved	---
3	Reserved	---
4	Reserved	---
5	Reserved	---
6	Reserved	---
7	Reserved	---
8	I/O Power Supply Status Flag	OFF: I/O power supply ON ON: I/O power supply OFF
9	Reserved	---
10	Reserved	---
11	Reserved	---
12	Reserved	---
13	Reserved	---
14	Reserved	---
15	Reserved	---

4-3 I/O Wiring

4-3-1 Wiring to the Screwless Clamping Terminal Block

All of the GRT1-series Slice I/O Units can be wired with screwless clamp terminal blocks, which do not require screws to be tightened. When connecting a sensor or an external device, always crimp pin terminals to the cable of the sensor or device. There are two types of pin terminals: one-pin terminals and two-pin terminals. By using two-pin terminals, wiring can be performed without using a GRT1-PC8(-1) I/O Power Connection Unit when connecting a 2-wire sensor to a GRT1-ID8(-1). When using a GRT1-OD8(-1), wiring can also be performed without using a GRT1-PC8(-1) I/O Power Connection Unit.

The following table shows the compatible pin terminals.

One-pin Terminals

Maker	Model number	Appropriate wire
Phoenix Contact	AI-0.5-10WH	0.5 mm^2 (AWG 20)
	AI-0.75-10GY	0.75 mm^2 (AWG 18)
	AI-1.5-10BK	1.25 mm^2 (AWG 16)
Nihon Weidmuller	H 0.5/16 D	0.5 mm^2 (AWG 20)
	H 0.75/16 D	0.75 mm^2 (AWG 18)
	H 1.5/16 D	1.25 mm^2 (AWG 16)

Two-pin Terminals

Maker	Model number	Appropriate wire
Phoenix Contact	AI-TWIN 2 x 0.75-10 GY	0.75 mm^2 (AWG 18)
Nihon Weidmuller	H 0.5/16.5 D	0.5 mm^2 (AWG 20)
	H 0.75/17 D	0.75 mm^2 (AWG 18)

Pin Terminal Length

Use pin terminals with a pin (conductor) length of 9 to 11 mm.

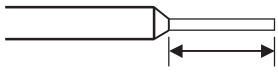

Pin length: 9 to 11 mm

Wiring to a Clamping Terminal Block

Insertion

Fully insert the pin terminal into any terminal hole.

Removal

Press the release button above the terminal hole with a slotted precision screwdriver and pull out the wire.

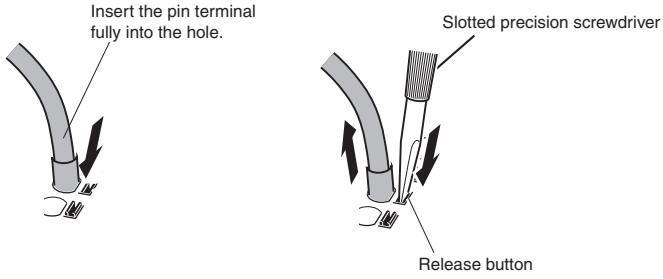

Note (1) When pressing the release button, press with appropriate force (30 N max.). If excessive force is used, the terminal block may be damaged.

(2) When 2-pin terminals are used next to each other, insert them facing vertically as shown in the following figure, so that the terminal insulating covers do not interfere with each other.

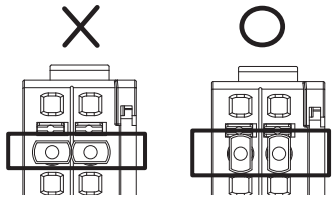

Crimp the pin terminals on the sides that align with wide sides of the insulating cover, as shown in the following figure.

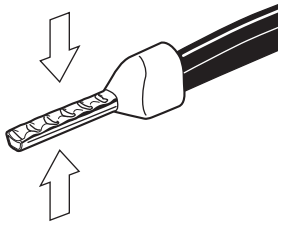

Use the following screwdriver or an equivalent to remove the wires.

Recommended Screwdriver

Model	Maker
SZF1	Phoenix Contact

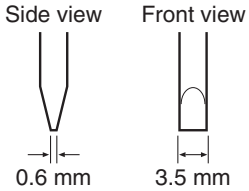

4-4 Functions of Digital I/O Units

4-4-1 I/O Power Supply Monitor

Function Overview

This function is used to detect whether the I/O power is ON.

When the I/O power supply is turned OFF, the Basic Unit I/O Power Supply Status Flag or Expansion Unit I/O Power Supply Status Flag in the Status Area is turned ON. (BIt 4 of the Communications Unit's Status Flags will be ON.)

The Programming Device can be used to read the flag status.

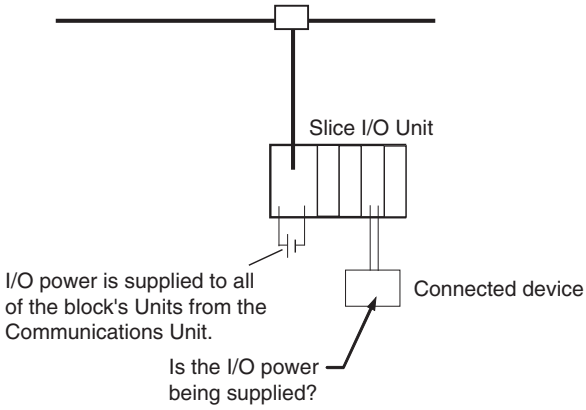

Note The value for detecting a low voltage for the I/O power cannot be set.

Checking with a Programming Device

This example shows how to use the DeviceNet Configurator (version 2.43 or higher) to check the I/O power status monitor information.

1,2,3...

1. Open the Network Configuration Window, right-click the Slice I/O Terminal's icon and display the Maintenance Information Window.
2. Select the desired Slice I/O Unit and click the **View** Button. The Unit's Maintenance Information Window will be displayed. If the *Power Supply Error* Option is selected, it indicates that I/O power is not being supplied.

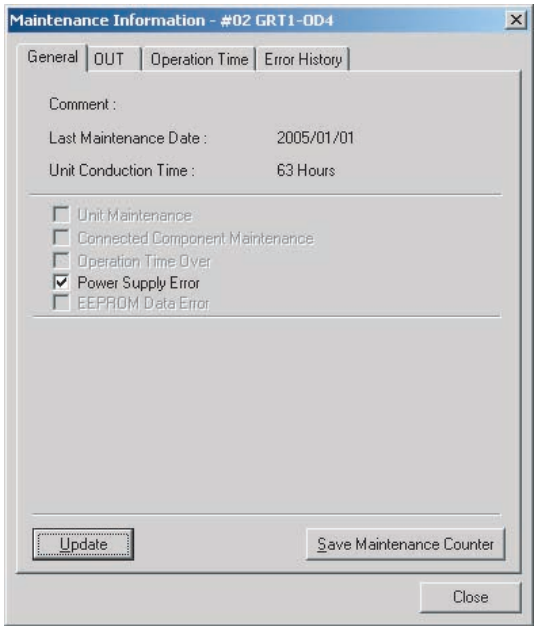

4-4-2 Input Filter (Input Units Only)

Function Overview

Input values can be read several times during a set interval so that the input value is enabled only when the value of all samples are the same. The input filter is applied to all of the inputs of the Unit.

ON Response Time

When input data changes to ON, the input data is read four times for the period of the set interval (1/4 of the ON response time). If all values are ON, the input is turned ON. The ON timing is delayed according to the length of the ON response time.

The input filter can also be used to perform an ON delay operation (a delay for the ON response time is created when the input filter is enabled).

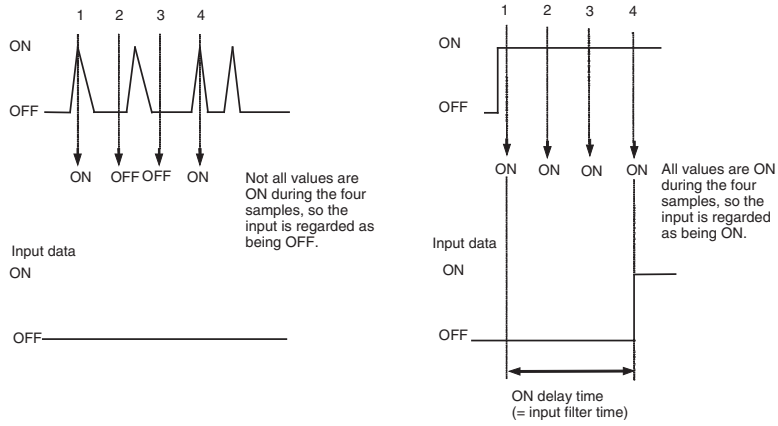

OFF Response Time

When input data changes to OFF, the input data is read five times for the period of the set interval (1/5 of the OFF response time). If all values are OFF, the input is turned OFF. The OFF timing is delayed according to the length of the OFF response time.

The input filter can also be used for ON/OFF delay operations.

To use a pulse shorter than the communications cycle time, set the OFF response time to a value longer than the communications cycle time. (If the input pulse is short, the input may remain ON.)

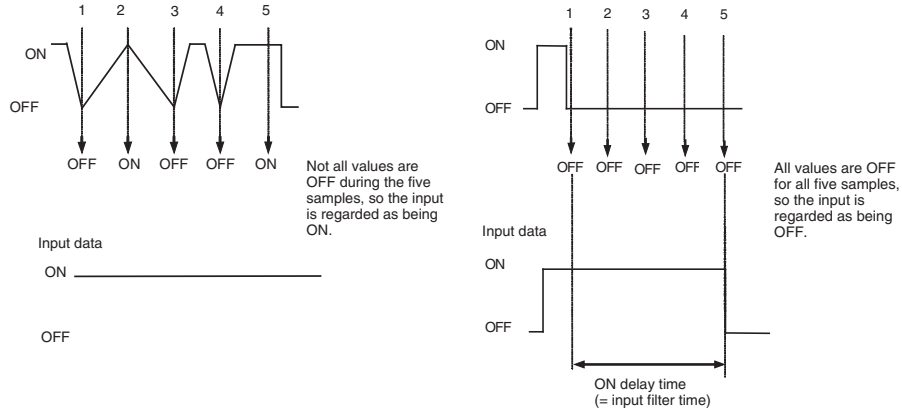

Setting with a Programming Device

This example shows how to use the DeviceNet Configurator (version 2.43 or higher) to set the input filter.

1,2,3...

1. Open the Network Configuration Window and double-click the desired Slice I/O Terminal's icon or right-click the icon and select **Parameters - *Edit*** to display the Edit Device Parameters Window.
2. Select the desired Slice I/O Unit from the list on the *I/O Module* Tab Page and click the **Edit** Button to display the Edit Unit Parameters Window.
3. Select the **IN** Tab, input the desired values for the ON response time (in the *ON Delay* Field) and the OFF response time (in the *OFF Delay* Field), and click the **OK** Button.

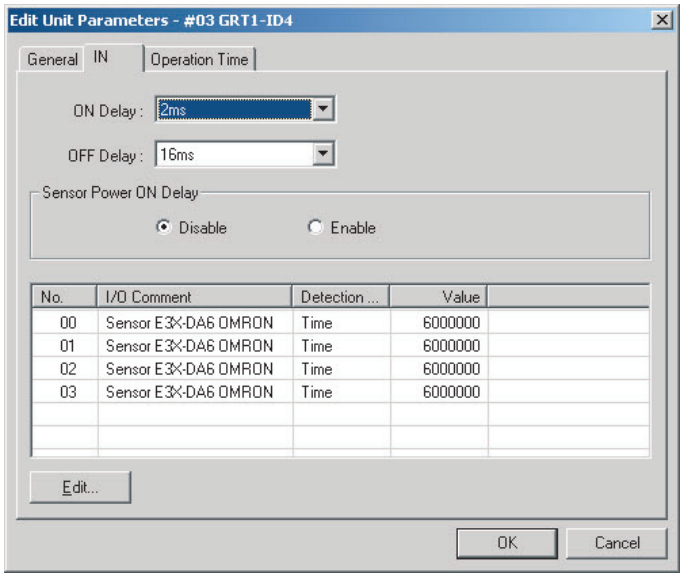

4. Click the **General** Tab.
5. Click the **Download** Button, and then click the **Reset** Button to reset the Unit.
6. Click the **OK** Button.

4-4-3 Sensor Power ON Delay (Input Units Only)

Function Overview

When the I/O power has gone OFF, this function blocks inputs for the first 100 ms after the I/O power is turned back ON. The power ON delay allows the sensor power supply to stabilize and prevents false input signals caused by inrush current at startup. The Programming Device can be used to enable or disable this function.

Setting with a Programming Device

This example shows how to use the DeviceNet Configurator (version 2.43 or higher) to set the sensor power ON delay function.

1,2,3...

1. Open the Network Configuration Window and double-click the desired Slice I/O Terminal's icon or right-click the icon and select **Parameters - *Edit*** to display the Edit Device Parameters Window.
2. Select the desired Slice I/O Unit from the list on the *I/O Module* Tab Page and click the **Edit** Button to display the Edit Unit Parameters Window.
3. Select the **IN** Tab, select the *Enable* Option for the *Sensor Power ON Delay*, and click the **OK** Button.

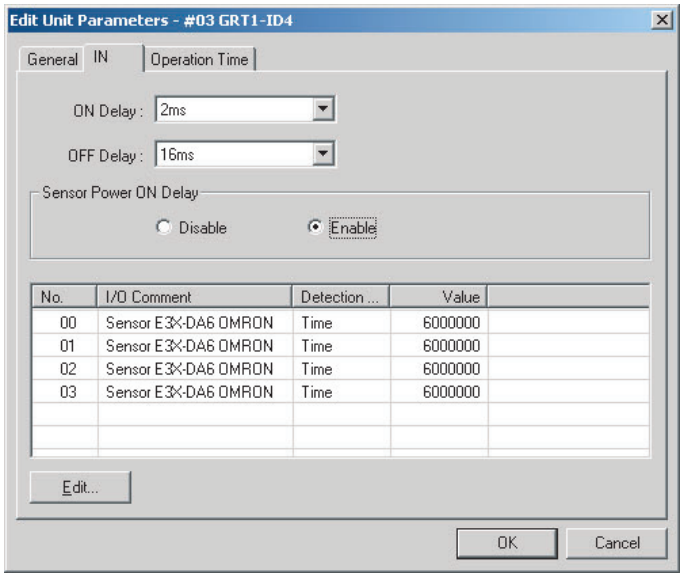

4. Click the **General** Tab.
5. Click the **Download** Button, and then click the **Reset** Button to reset the Unit.
6. Click the **OK** Button.

4-4-4 Contact Operation Counter

Function Overview

The Contact Operation Counter is used to count the number of times each input or output contact has changed from OFF to ON (maximum resolution 50 Hz) and record the total value calculated in the Unit.

The monitor value can be set in the Unit, and when the set number of operations is reached, the Connected Device Maintenance Flag in the Status Area will be turned ON. (The Programming Device can be used to read the status of the Connected Device Maintenance Flag.)

- Counted operations: 0 to 4,294,967,295 operations (stored data: 00000000 to FFFFFFFF hex)
- Counting unit: One operation

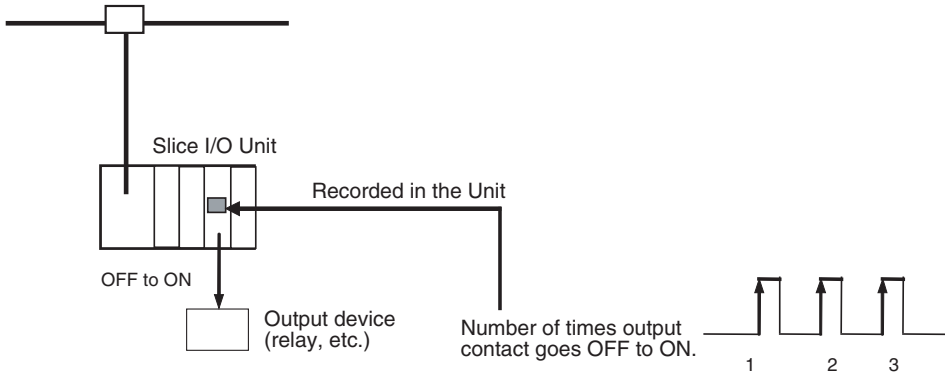

Note

1. The Contact Operation Counter and Total ON Time Monitor cannot be used at the same time for a single contact. Select the function to be used in the *Detection Mode* Area.
2. The Contact Operation Counter will not operate unless I/O power is being supplied.

Setting with a Programming Device

This example shows how to use the DeviceNet Configurator (version 2.43 or higher) to set the Contact Operation Counter function.

1,2,3...

1. Open the Network Configuration Window and double-click the desired Slice I/O Terminal's icon or right-click the icon and select **Parameters - *Edit*** to display the Edit Device Parameters Window.
2. Select the desired Slice I/O Unit from the list on the *I/O Module* Tab Page and click the **Edit** Button to display the Edit Unit Parameters Window.
3. Select the **IN** Tab.

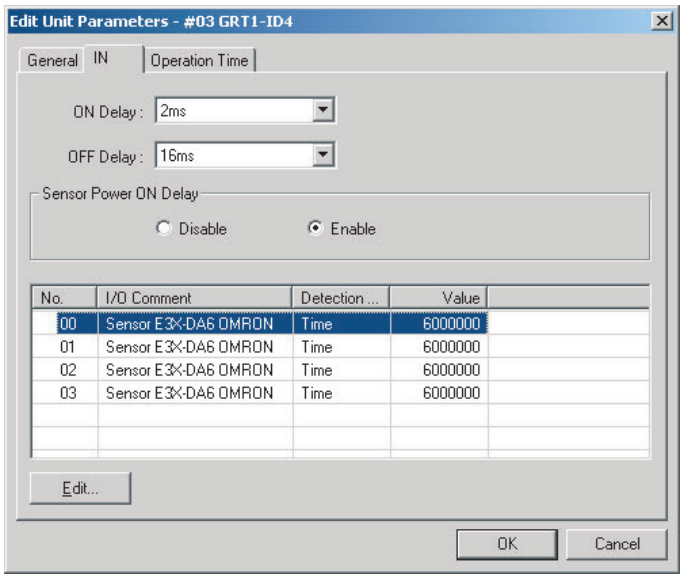

4. Select the desired device and double-click the **I/O Comment** Column to display the following window. Select the *Count* Option in the *Detection Mode* Area, enter a monitor value in the *Value* Field, and then click the **OK** Button.

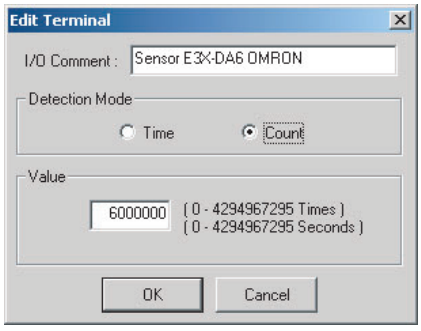

5. After checking that the setting for the monitor value is reflected in the Edit Unit Parameters Window, click the **General** Tab and click the **Download** Button.
6. Click the **OK** Button.

4-4-5 Total ON Time Monitor

Function Overview

The total ON time for each I/O contact can be calculated (unit: s) and recorded in the Unit. A monitor value can be set in the Unit, and when the total I/O contact ON time reaches the monitor value, the Connected Device Maintenance Flag in the Status Area is turned ON. (Bit 2 of the Communications Unit's Status Flags is turned ON.) The Programming Device can be used to read the status of the Connected Device Maintenance Flag.

- Measured time: 0 to 4,294,967,295 s (stored data: 00000000 to FFFFFFFF hex)
- Measuring unit: s

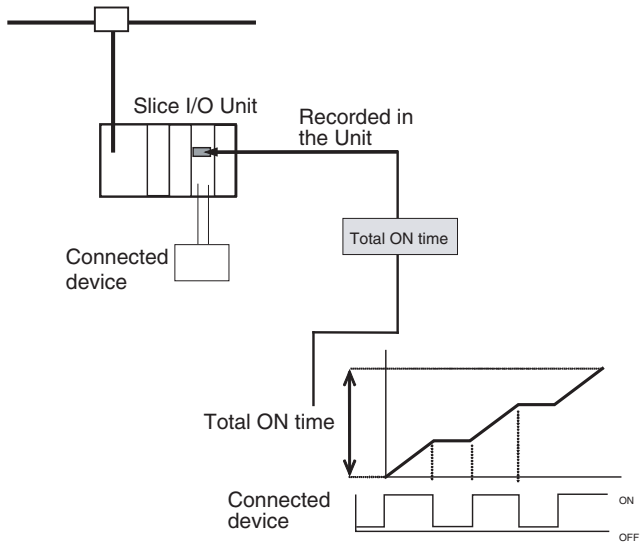

Note

1. The Total ON Time Monitor and Contact Operation Counter cannot be used at the same time for a single contact. Select the function to be used in the *Detection Mode* Area.
2. The Total ON Time Monitor operates when the I/O power is ON only.
3. The Total ON Time Monitor checks approximately every second whether the connected devices are ON.
   If the total ON time is calculated for ON times of less than a second, the measurement may not be accurate.

■ **Measurement for ON Time of 0.5 s:**

In *Figure 1*, the actual ON time is 0.5 s × 3 = 1.5 s. The measurement will be taken once during this ON time, so the total ON time will be measured as 1 s.

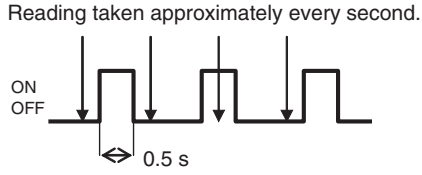

Figure 1

In *Figure 2*, the actual ON time is 0.5 s × 3 = 1.5 s. The reading will be taken twice during this ON time, so the total ON time will be measured as 2 s.

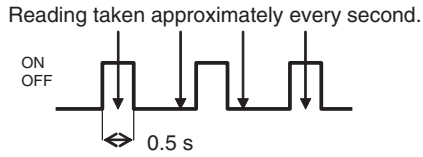

Figure 2

■ **Measurement for ON time of 1.5 s:**

In *Figure 3*, the actual ON time is 1.5 s × 2 = 3 s. The measurement will be taken four times during this ON time, so the total ON time will be measured as 4 s.

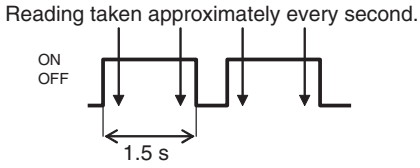

Figure 3

Setting with a Programming Device

This example shows how to use the DeviceNet Configurator (version 2.43 or higher) to set the Total ON Time Monitor function.

1,2,3...

1. Open the Network Configuration Window and double-click the desired Slice I/O Terminal's icon or right-click the icon and select **Parameters - *Edit*** to display the Edit Device Parameters Window. Select the desired Slice I/O Unit from the list on the *I/O Module* Tab Page and click the **Edit** Button to display the Edit Unit Parameters Window.
2. Select the **IN** Tab.

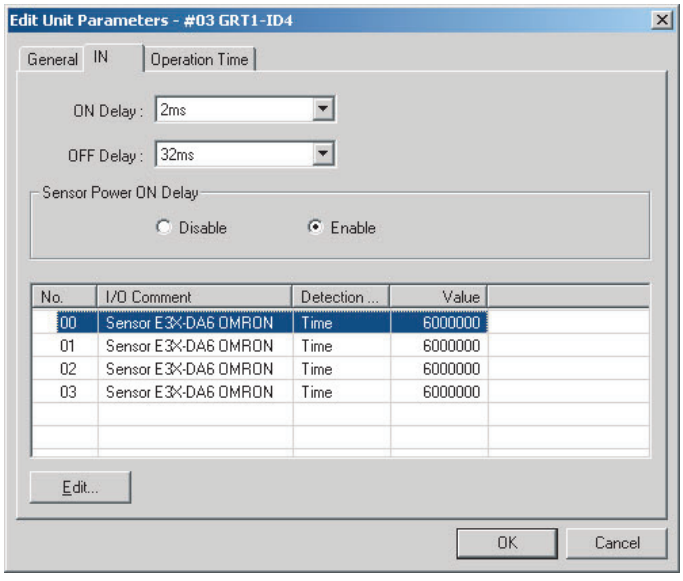

3. Select the desired device and double-click the **I/O Comment** Column to display the following window. Select the *Time* Option in the *Detection Mode* Area, enter a monitor value in the *Value* Field, and then click the **OK** Button.

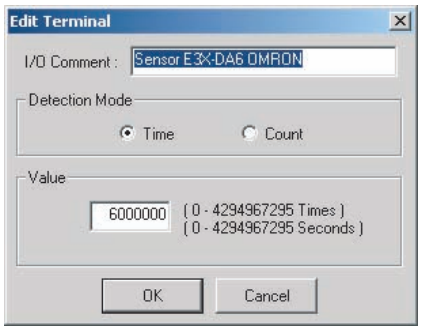

4. After checking that the setting for the monitor value is reflected in the Edit Unit Parameters Window, click the **General** Tab, and click the **Download** Button.
5. Click the **OK** Button.

4-4-6 Operation Time Monitor

Function Overview

This function can measure and monitor the time between the ON/OFF transitions of two bits. The Unit's starting and ending bits can be selected freely. The trigger edge (ON→OFF or OFF→ON), and input or output numbers can be selected freely, providing flexibility when testing. A monitor value can be set in the Unit to monitor the operating time, and turn ON a warning flag in the Status Area when the set value is reached. A monitor value can be set in the Unit, and when the operating time exceeds the monitor value, the Operation Time Monitor Flag in the Status Area is turned ON. (Bit 2 of the Communications Unit's Status Flags is turned ON.) The Programming Device can be used to read the status of the flag.

Setting with a Programming Device

This example shows how to use the DeviceNet Configurator (version 2.43 or higher) to set the Operation Time Monitor function.

1,2,3...

1. Open the Network Configuration Window and double-click the desired Slice I/O Terminal's icon or right-click the icon and select **Parameters - *Edit*** to display the Edit Device Parameters Window. Select the desired Slice I/O Unit from the list on the *I/O Module* Tab Page and click the **Edit** Button to display the Edit Unit Parameters Window.
2. Select the **Operation Time** Tab.

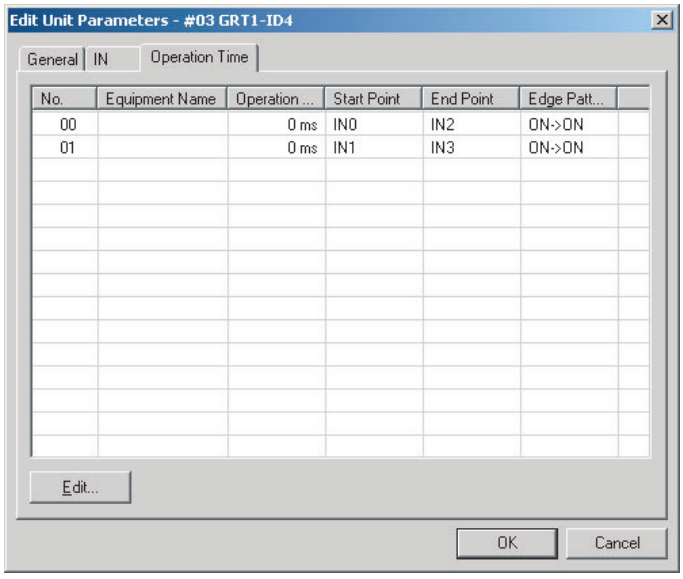

3. Select the desired device and double-click the **Equipment Name** Column to display the following window. Input the desired monitor value in the *Operation Time* Field, specify the starting and ending I/O points, select the trigger edge pattern (ON→OFF or OFF→ON), and then click the **OK** Button.

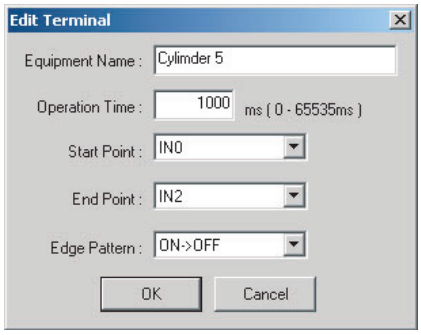

4. After checking that the setting for the monitor value is reflected in the Edit Unit Parameters Window, click the **General** Tab, click the **Download** Button, and then click the **Reset** Button.
5. Click the **OK** Button.

4-4-7 Output Hold/Clear Setting

Set the output's hold/clear setting to specify the output status when an error occurs in the Output Unit. This example shows how to use the DeviceNet Configurator (version 2.43 or higher) to set the Output Hold/Clear setting.

1,2,3...

1. Open the Network Configuration Window and double-click the desired Slice I/O Terminal's icon or right-click the icon and select ***Parameters - Edit*** to display the Edit Device Parameters Window.
2. Select the desired Slice I/O Unit from the list on the *I/O Module* Tab Page and click the **Edit** Button to display the Edit Unit Parameters Window.
3. Click the **OUT** Tab.

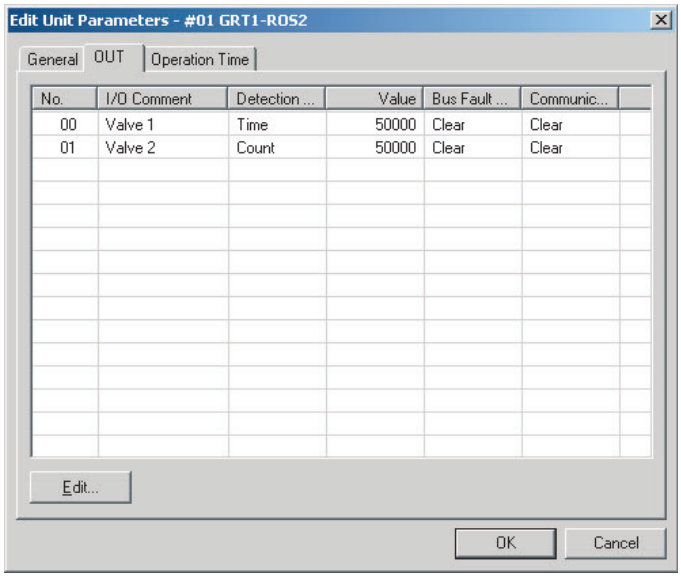

4. Double-click the desired device's output to display the following window. Set the status of the Output Unit's outputs for bus errors and communications errors.

Output status for bus errors (*Fault Action*)	Sets the status of outputs when an error occurs in the Slice I/O Terminal's slice bus.
Output status for communications errors (*Idle Action*)	Sets the status of outputs when an error occurs in host communications (such as DeviceNet).

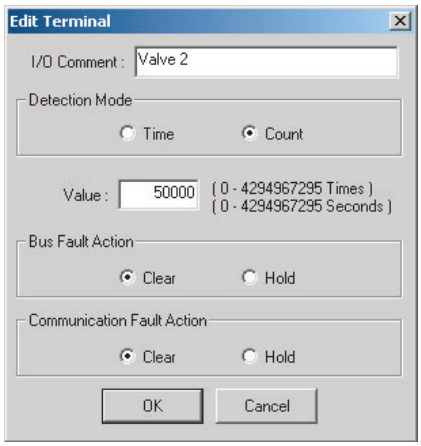

5. After checking that the settings are reflected in the Edit Unit Parameters Window, click the **General** Tab, click the **Download** Button, and then click the **Reset** Button.
6. Click the **OK** Button.

4-5 Maintenance Information Window

This section describes the Maintenance Information Window, which can be used to check the status of the Digital I/O Units. The Monitor Device Window can be used to check the same Unit status information, but the examples in this section use the Maintenance Information Window.

4-5-1 Checking Maintenance Information

From the Programming Device's Main Window, click the right mouse button and select ***Maintenance Information***. (From the Maintenance Mode Window, double-click the icon of the desired Unit.)

Click the **I/O Module** Tab, select the desired Unit, and click the **View** Button to display the Unit's Maintenance Information Window.

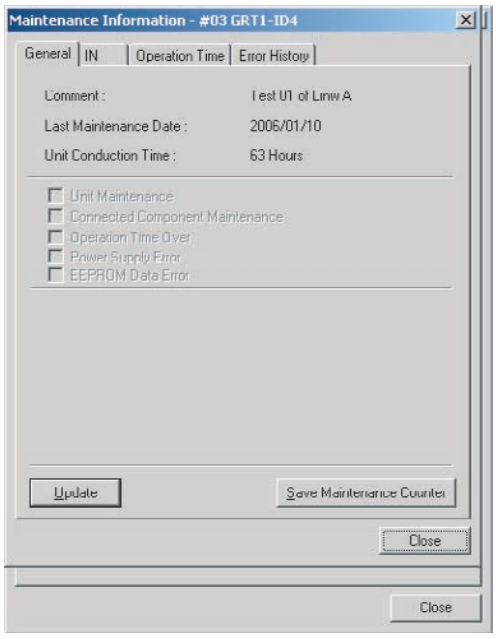

Tabs in the Maintenance Information Window

General Tab Page

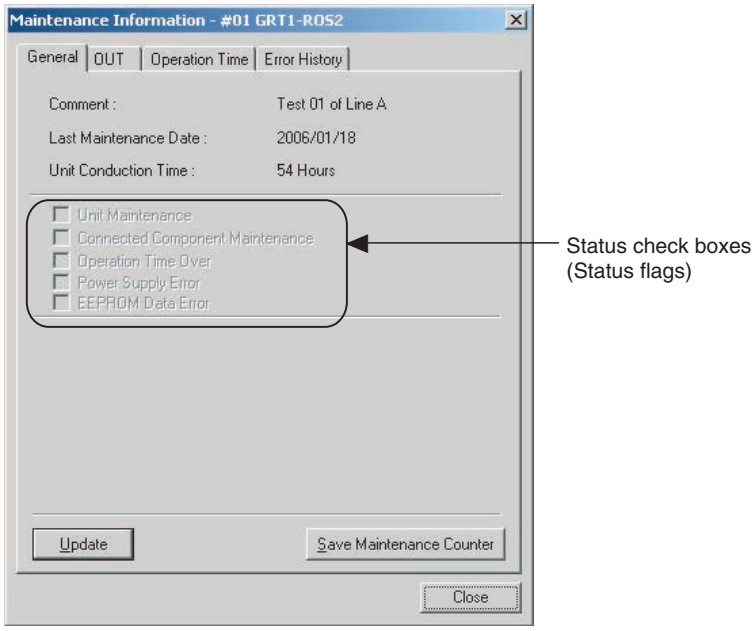

Item	Description
Comment	Displays up to 32 characters of text set as the Unit comment.
Last Maintenance Date	Displays the last maintenance date that was set.
Unit Conduction Time	Displays the total time that the Unit has been ON (cumulative power ON time).
Update Button	Click this Button to update the Maintenance information.
Save Maintenance Counter	This function saves the maintenance counter value in the Unit. If this function is used, the previous value will be retained when the power supply is turned OFF and ON again.

Status Check Boxes for Status Flags

The flags shown in the following table will be turned ON when the corresponding error occurs.

Item	Description
Unit Maintenance	ON when the total Unit ON time exceeds the set value. Also turns ON when the Unit ON time exceeds 87672 hours (10 years).
Connected Device Maintenance	ON when any I/O point's Total ON Time Monitor or Contact Operation Counter exceeds its user-set monitor value.
Operation Time Monitor	ON when the measured operation time exceeds the user-set monitor value.
I/O Power Supply Error	ON when the input power supply is OFF.
EEPROM data error	ON when the data contained in EEPROM is invalid.

OUT Tab Page

Output terminals are listed in numerical order.

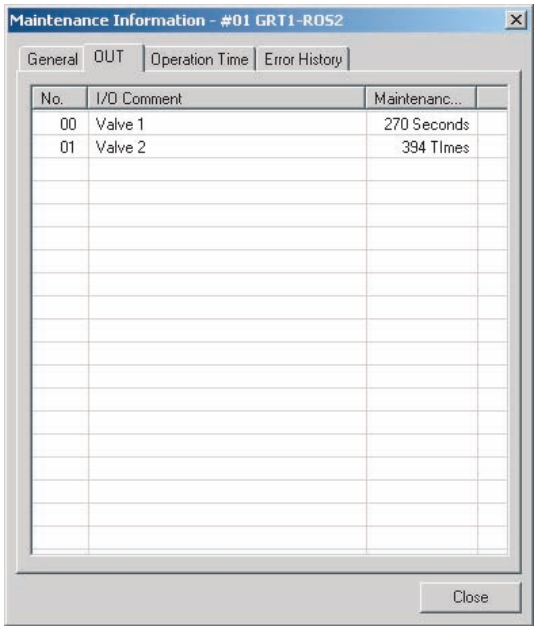

Item	Description
Comment	Displays up to 32 characters of text set as the output comment for each output.
Maintenance Counter	Displays the maintenance counter for each output. If the maintenance counter exceeds the threshold value, a warning icon will be displayed on the left side of the output's *No.* column. Total ON Time Monitor unit = seconds Contact Operation Counter unit = operations

IN Tab Page

Input terminals are listed in numerical order.

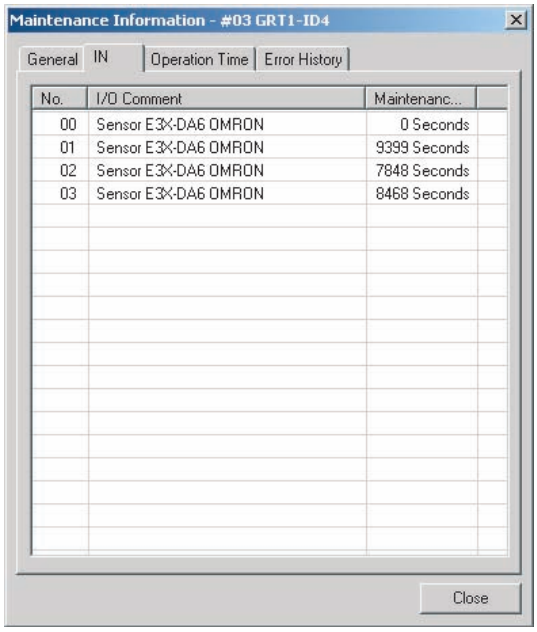

Item	Description
Comment	Displays up to 32 characters of text set as the input comment for each input.
Maintenance Counter	Displays the maintenance counter for each input. If the maintenance counter exceeds the threshold value, a warning icon will be displayed on the left side of the input's *No.* column. Total ON Time Monitor unit = seconds Contact Operation Counter unit = operations

Operation Time Tab Page

Terminals are listed in numerical order.

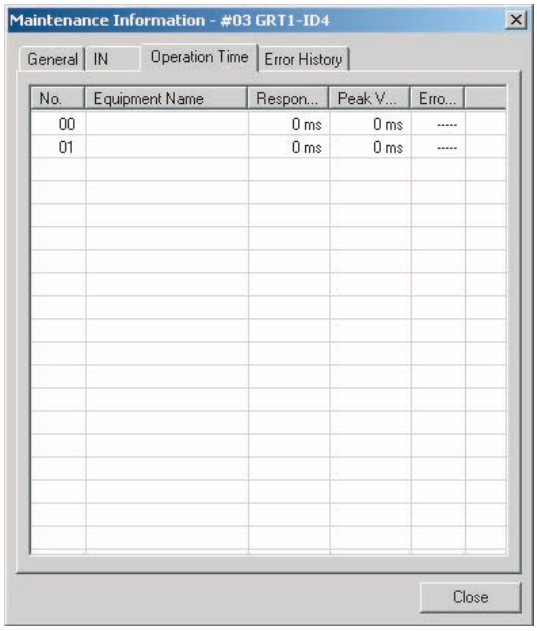

Item	Description
Equipment Name	Displays up to 16 characters of text set as the comment for each monitored device.
Response Time	Displays the operation time (in ms) for each device. If the operation time exceeds the threshold, a warning icon will be displayed on the left side of the terminal's *No.* column.
Peak Value	Displays the maximum operation time that has occurred.
Error History	Reads the I/O Unit error history.

Error History Tab Page

Displays the most recent errors that have occurred.

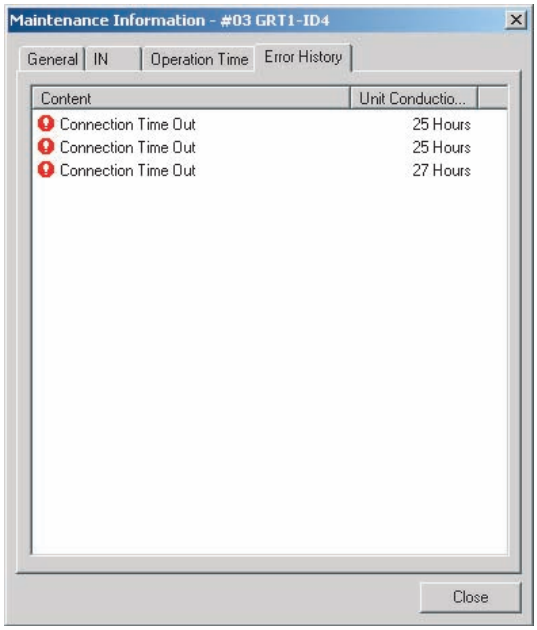

Item	Description
Content	Displays the contents of the communications errors that have occurred.
Unit Conduction Time	Displays the total time that the network power supply had been ON when the error occurred.

4-6 Digital I/O Units

4-6-1 Four-point DC Input Units: GRT1-ID4 (NPN) and GRT1-ID4-1 (PNP)

Input Specifications

Item	Specification	
Model	GRT1-ID4	GRT1-ID4-1
Internal I/O common	NPN	PNP
Number of I/O points	4 inputs	
ON voltage	15 VDC min. (between each input terminal and V)	15 VDC min. (between each input terminal and G)
OFF voltage	5 VDC max. (between each input terminal and V)	5 VDC max. (between each input terminal and G)
OFF current	1 mA max.	
Input current	6.0 mA max./point (for 24 VDC)	
ON delay time	1.5 ms max.	
OFF delay time	1.5 ms max.	
Number of circuits	4 inputs with one common	

Component Names and Functions (Same for GRT1-ID4 and GRT1-ID4-1)

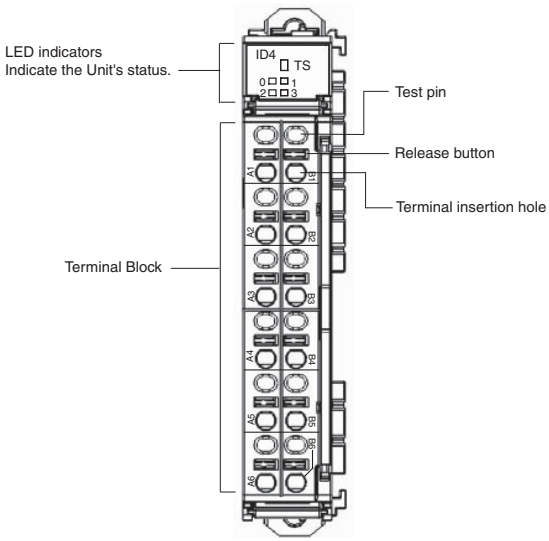

Internal Circuits

GRT1-ID4 (NPN)

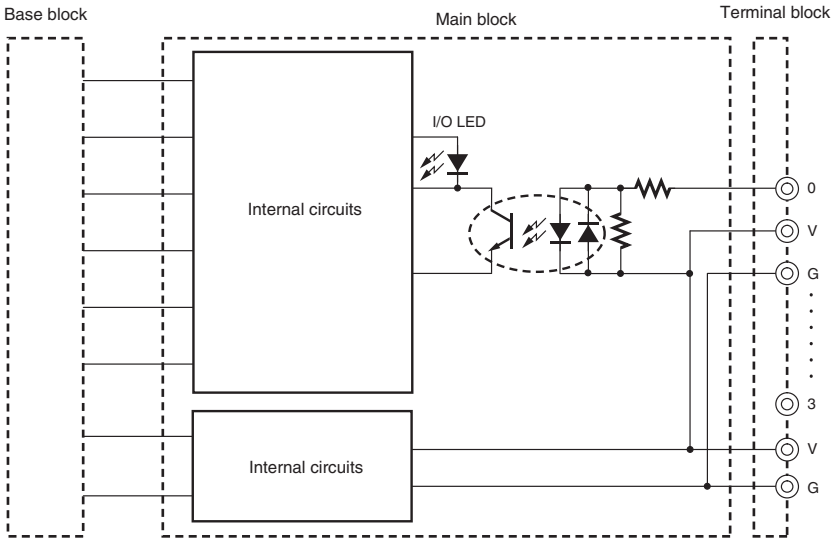

GRT1-ID4-1 (PNP)

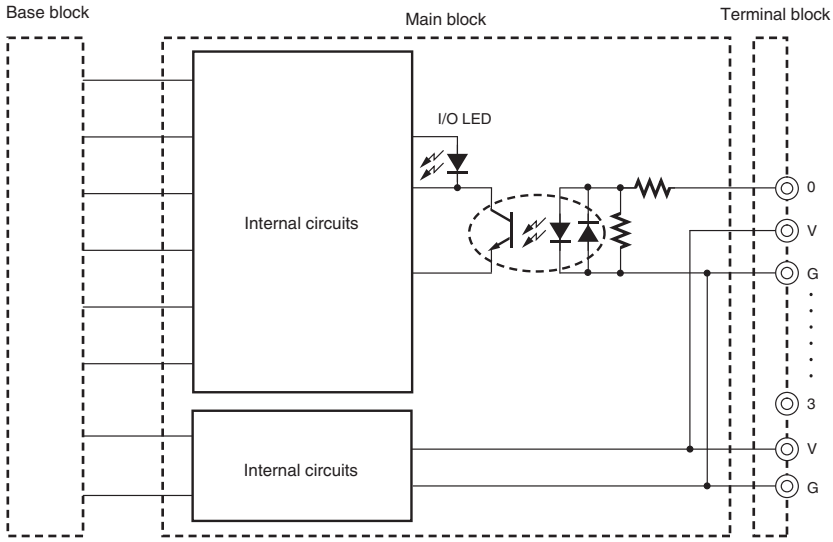

Wiring

GRT1-ID4 (NPN)

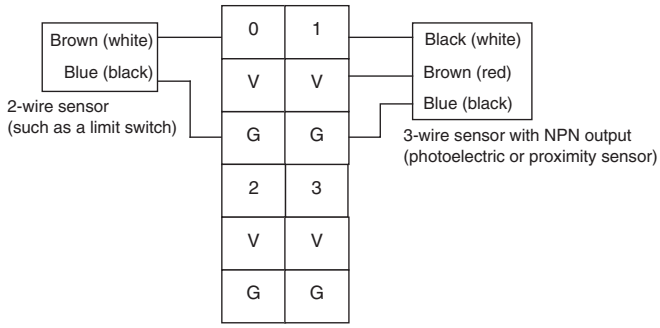

GRT1-ID4-1 (PNP)

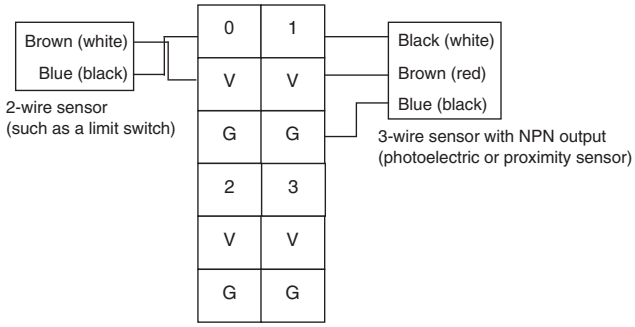

Note Wire colors in parentheses are the previous JIS colors for photoelectric and proximity sensors.

Dimensions (Same for GRT1-ID4 and GRT1-ID4-1)

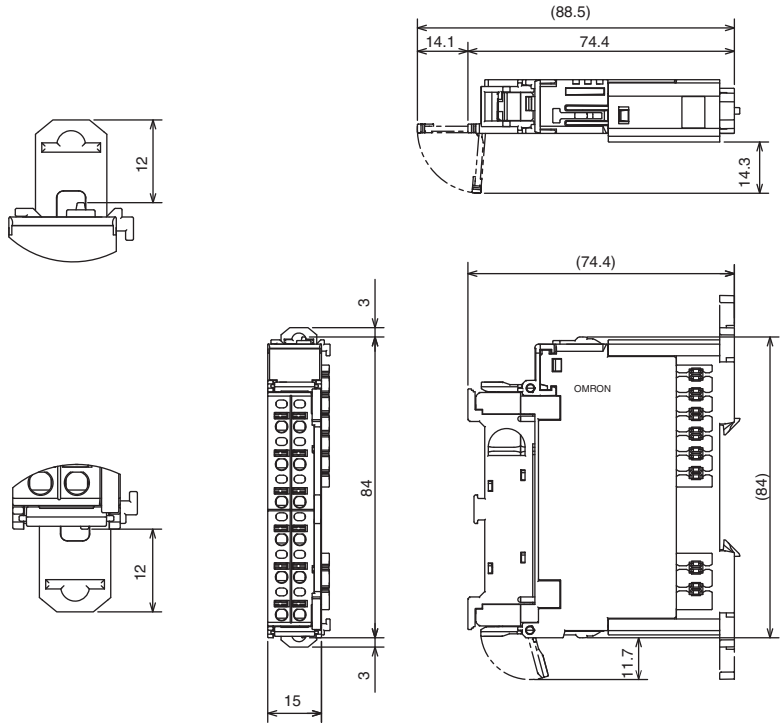

4-6-2 Four-point Transistor Output Units: GRT1-OD4 (NPN), GRT1-OD4-1 (PNP), GRT1-OD4G-1 (PNP), GRT1-OD4G-3 (PNP)

Output Specifications

Item	Specification			
Model	GRT1-OD4	GRT1-OD4-1	GRT1-OD4G-1	GRT1-OD4G-3
Internal I/O common	NPN	PNP	PNP	PNP
Number of I/O points	4 outputs			
Rated output current	0.5 A/point max.			2.0 A max./point up to an ambient temperature of 30°C (Refer to the table in *Rated Output Current* for restrictions at higher ambient temperatures.)
Output overcurrent and short-circuit protection	Not supported.	Not supported.	Supported (with automatic recovery). (See note.)	Supported (with automatic recovery). (See note.)
Residual voltage	1.2 V max. (at 0.5 A between each output terminal and G)	1.2 V max. (at 0.5 A between each output terminal and V)		1.2 V max. (at 2 A between each output terminal and V)
Leakage current	0.1 mA max.			
ON delay time	0.5 ms max.			
OFF delay time	1.5 ms max.			
Number of circuits	4 outputs with one common			4 points, common V/G
I/O power supply	24 V I/O power supply voltage supplied via the slice I/O bus			24 V I/O power supply voltage supplied via the unit I/O terminal connector. Refer to *3-2 Power Supply Wiring*.

Note With the GRT1-OD4G-1 or GRT1-OD4G-3, even if a short-circuit occurs on one output, the other three outputs will operate normally.

Rated Output Current of the GRT1-OD4G-3

The total power that may be delivered by the outputs of the GRT1-OD4G-3 depends on the ambient temperature. To determine the maximum allowed temperature for an application, add the squares of the currents (at 24 V DC) for outputs that can be ON simultaneously. Find the corresponding temperature in the following graph. The actual ambient temperature may not exceed the found value.

If necessary, spread the output load over multiple GRT1-OD4G-3 Units.

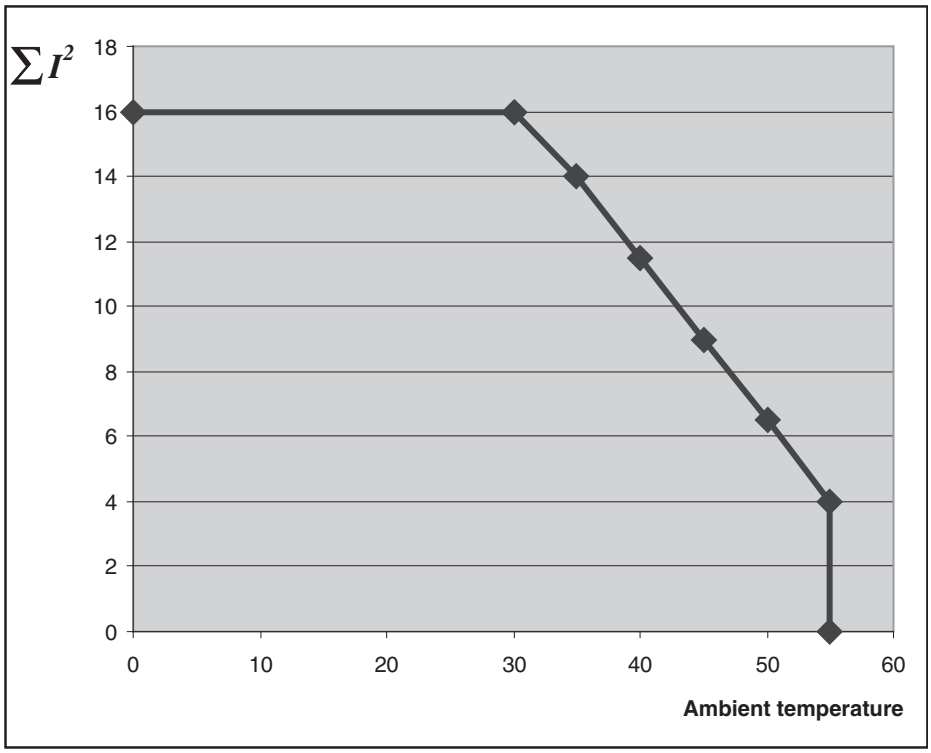

Ambient temperature	$\sum I^2$	Examples of maximum output loads
≤30 °C	16 A^2	4 points × 2 A
35 °C	14 A^2	3 points × 2 A + 1 points × 1.4 A 4 points × 1.85 A
40 °C	11.5 A^2	2 points × 2 A + 2 points × 1.3 A 4 points × 1.7 A
45 °C	9 A^2	2 points × 2 A + 2 points × 0.7 A 4 points × 1.5 A
50 °C	6.5 A^2	1 points × 2 A + 1 points × 1.4 A + 2 points × 0.5 A 4 points × 1.25 A
55 °C	4 A^2	1 points × 2 A 4 points × 1 A

Component Names and Functions (Same for GRT1-OD4, GRT1-OD4-1, GRT1-OD4G-1, GRT1-OD4G-3)

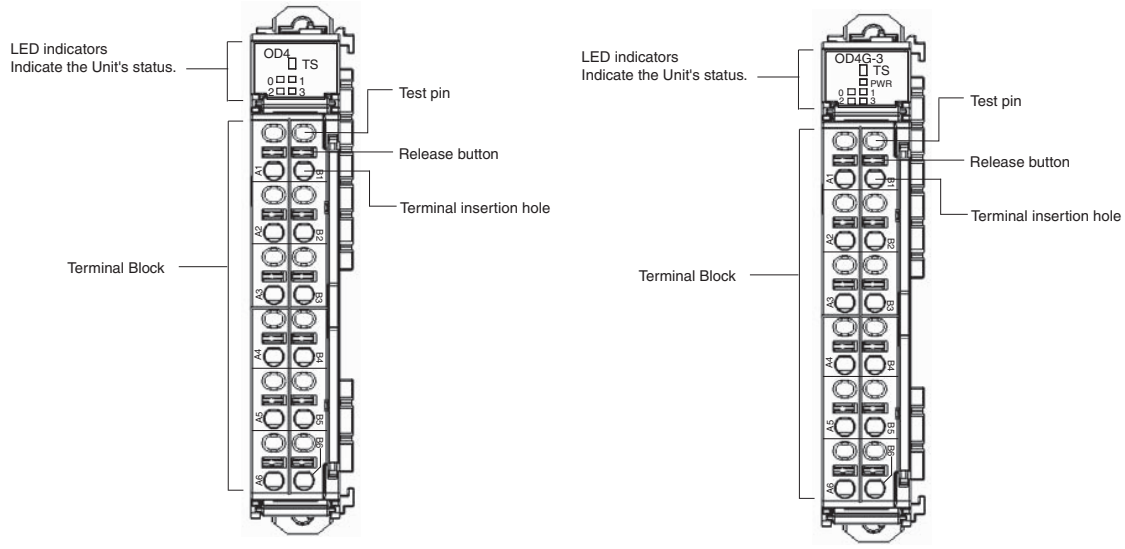

GRT1-OD4
GRT1-OD4-1
GRT1-OD4G-1

GRT1-OD4G-3

PWR Indicator

The PWR indicator shows the status of the power supply on the GRT1-OD4G-3 only.

PWR	Green	Lit	I/O power and Unit power are being supplied.
		Not lit	I/O power or Unit power is not being supplied.

For information on other indicators, refer to *2-1-3 LED Indicators*.

Internal Circuits

GRT1-OD4 (NPN)

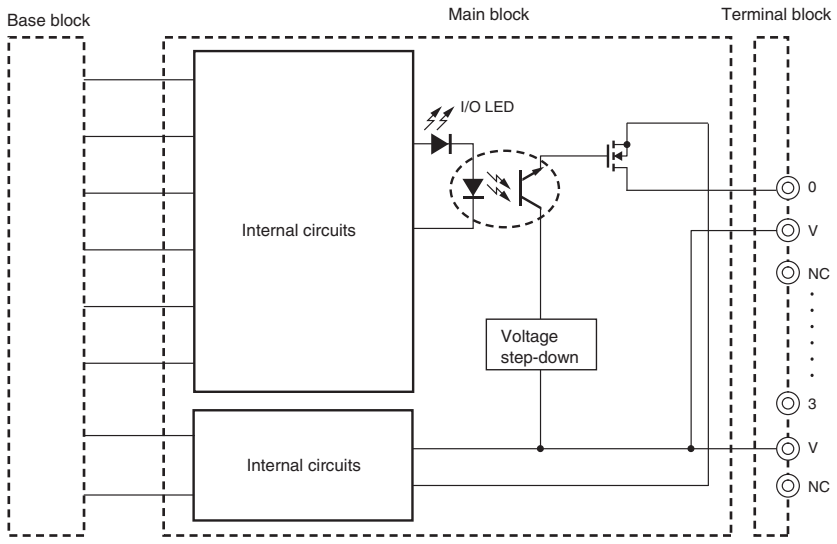

GRT1-OD4-1 (PNP)

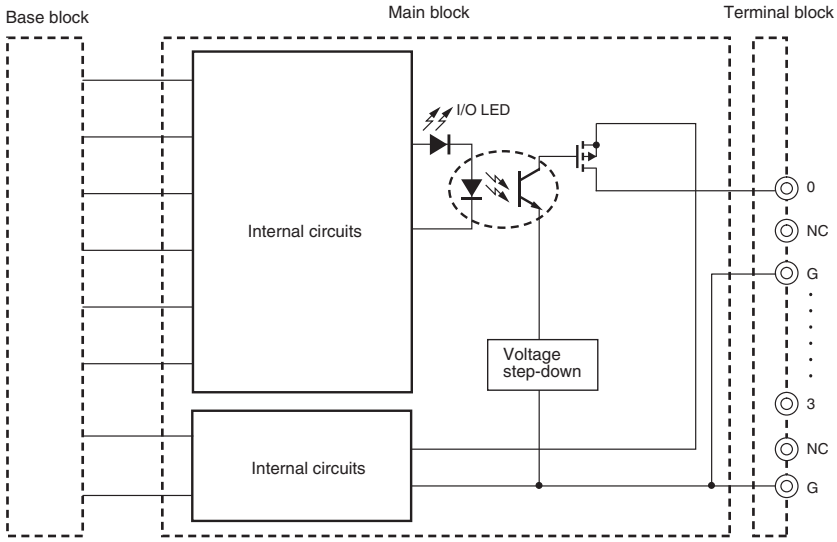

GRT1-OD4G-1 (PNP)

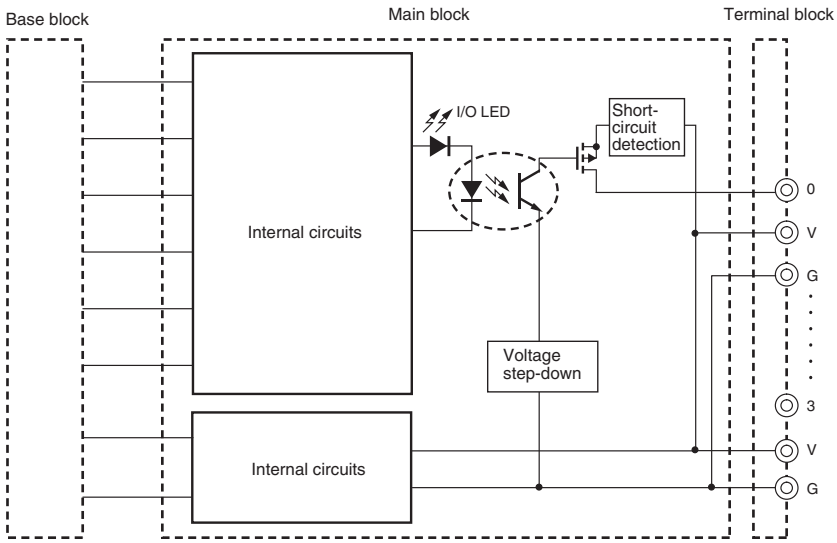

GRT1-OD4G-3 (PNP)

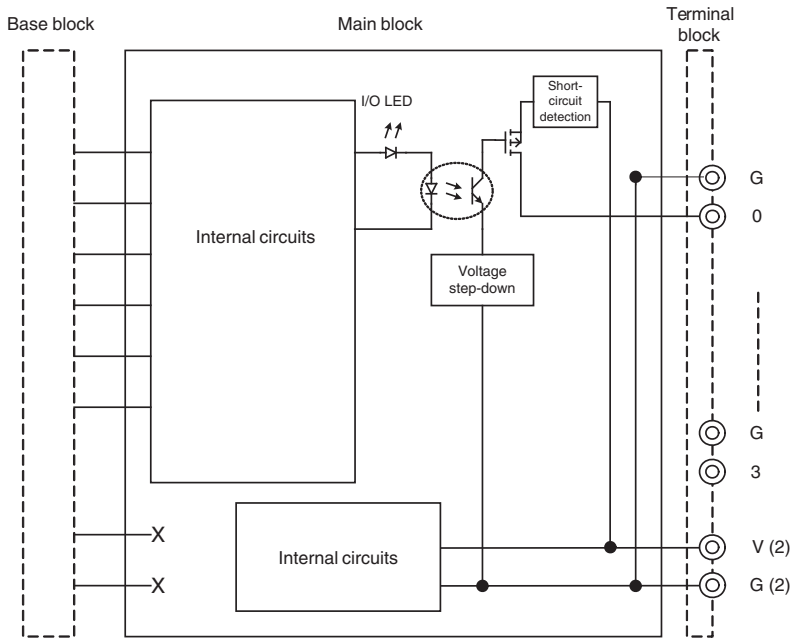

Wiring

GRT1-OD4 (NPN)

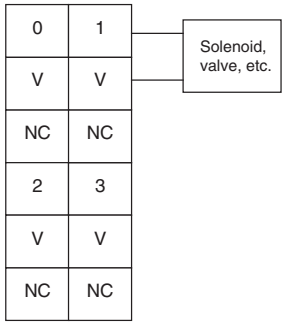

GRT1-OD4-1 (PNP)

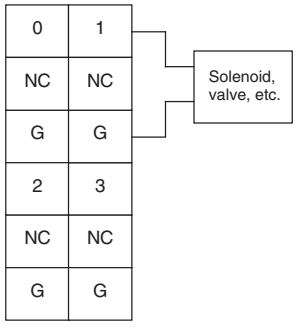

GRT1-OD4G-1 (PNP)

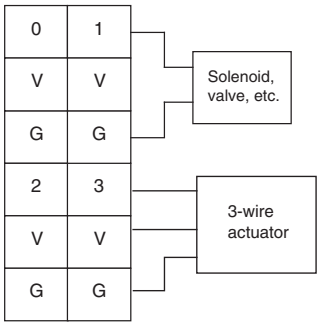

GRT1-OD4G-3 (PNP)

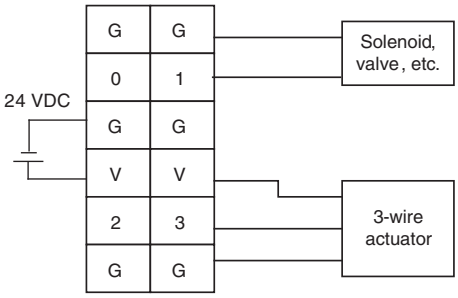

Dimensions (Same for GRT1-OD4, GRT1-OD4-1, GRT1-OD4G-1, and GRT1-OD4G-3)

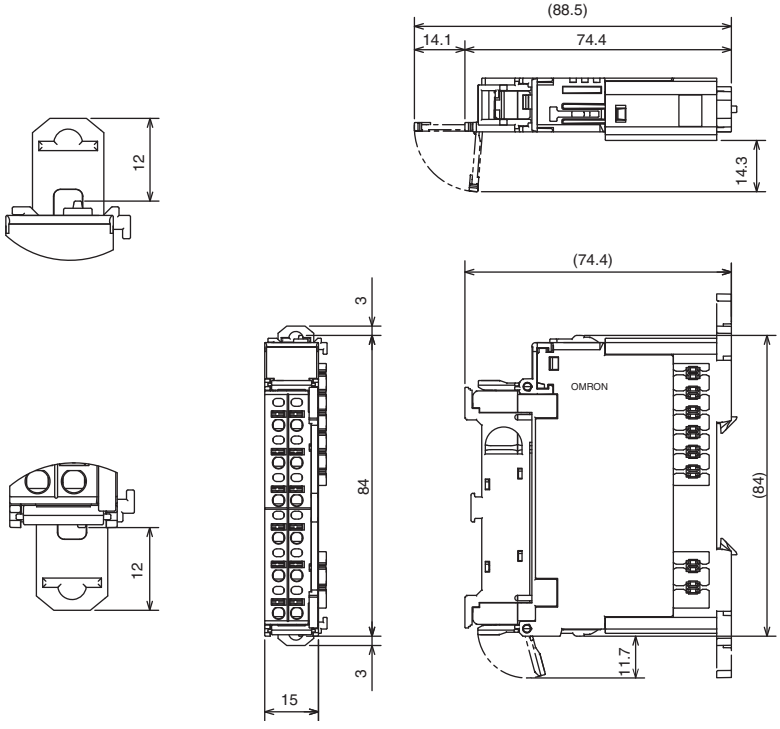

4-6-3 Eight-point DC Input Units: GRT1-ID8 (NPN) and GRT1-ID8-1 (PNP)

Input Specifications

Item	Specification	
Model	GRT1-ID8	GRT1-ID8-1
Internal I/O common	NPN	PNP
Number of I/O points	8 inputs	
ON voltage	15 VDC min. (between each input terminal and V)	15 VDC min. (between each input terminal and G)
OFF voltage	5 VDC max. (between each input terminal and V)	5 VDC max. (between each input terminal and G)
OFF current	1 mA max.	
Input current	3.0 mA min./point for 24 VDC 4.0 mA max./point for 24 VDC	
ON delay time	1.5 ms max.	
OFF delay time	1.5 ms max.	
Number of circuits	8 inputs with one common	

Component Names and Functions (Same for GRT1-ID8 and GRT1-ID8-1)

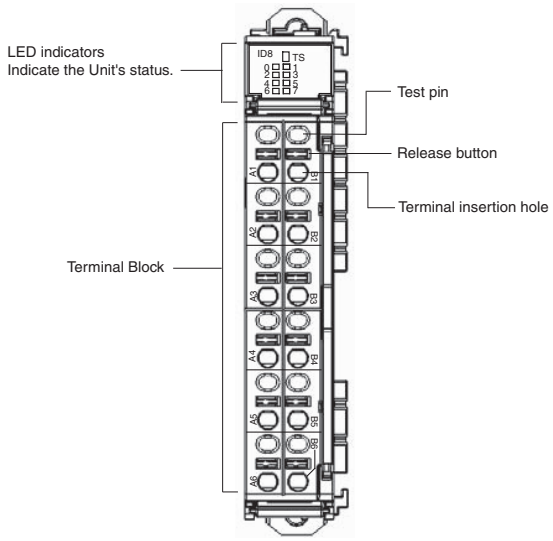

Internal Circuits

GRT1-ID8 (NPN)

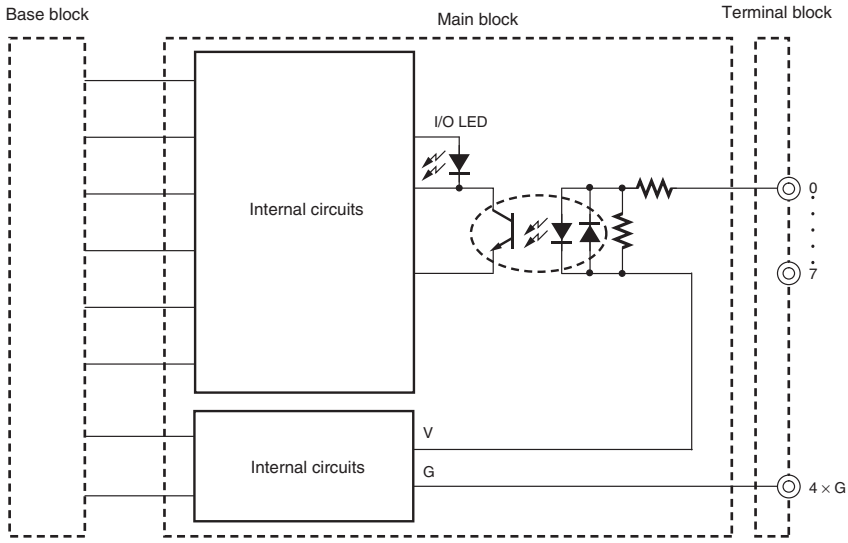

GRT1-ID8-1 (PNP)

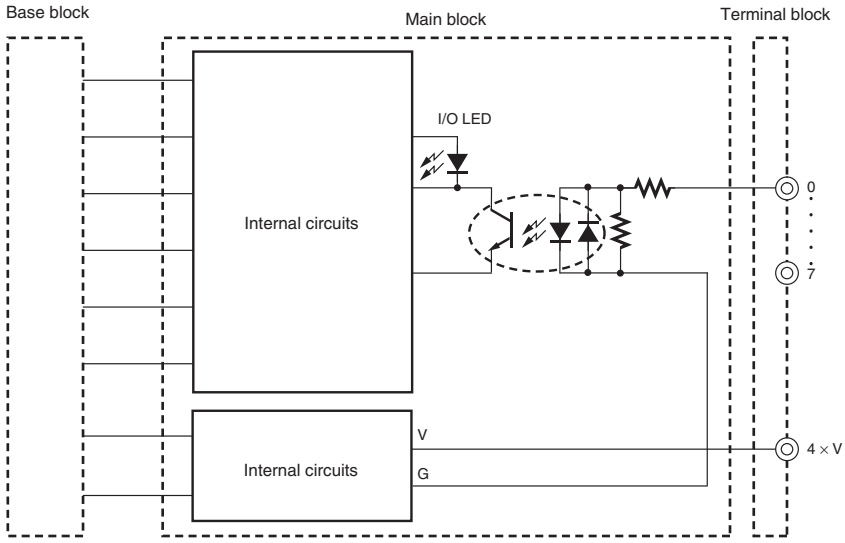

Wiring

GRT1-ID8 (NPN)

GRT1-ID8 (NPN)

When using 3-wire sensors, wire using the GRT1-PC8 I/O Power Connection Unit as shown in the following figure.

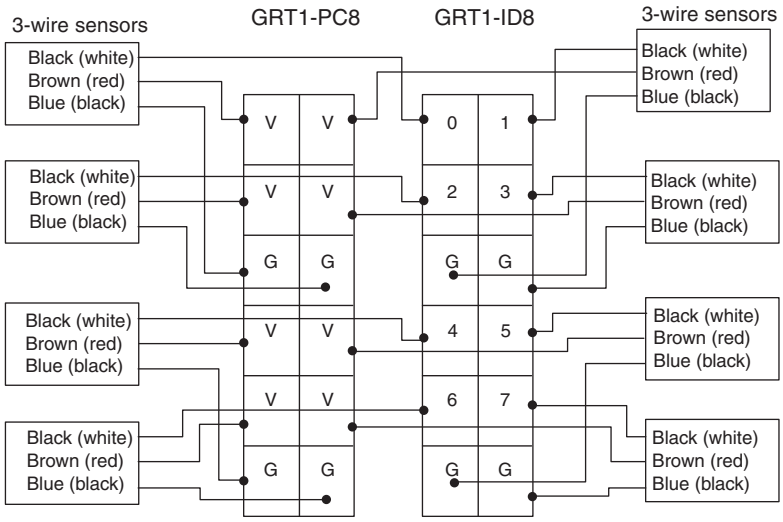

If the Unit connected on the left needs to be isolated, wire using the GRT1-PD8 I/O Power Feed Unit. When using the GRT1-PD8 I/O Power Feed Unit, however, a maximum of seven sensors can be connected, as shown in the following figure.

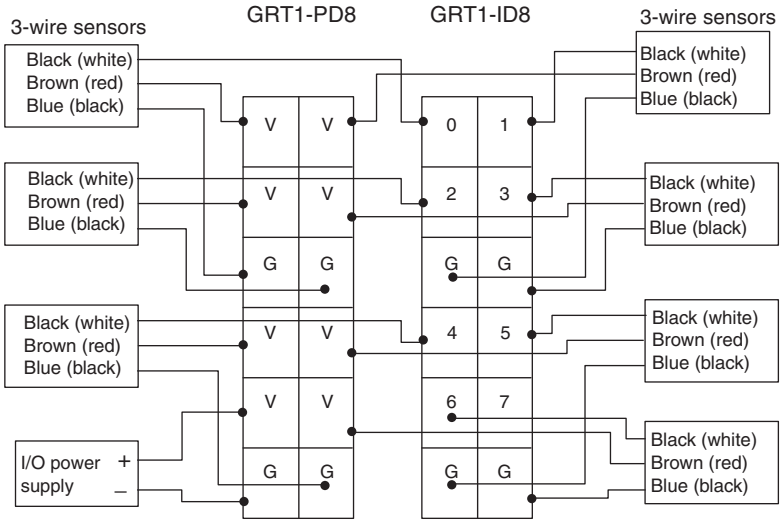

When connecting 2-wire sensors, wire using the GRT1-PC8-1 I/O Power Connection Unit as shown in the following figure. A single I/O Power Connection Unit can be connected to up to two GRT1-ID8 Units.

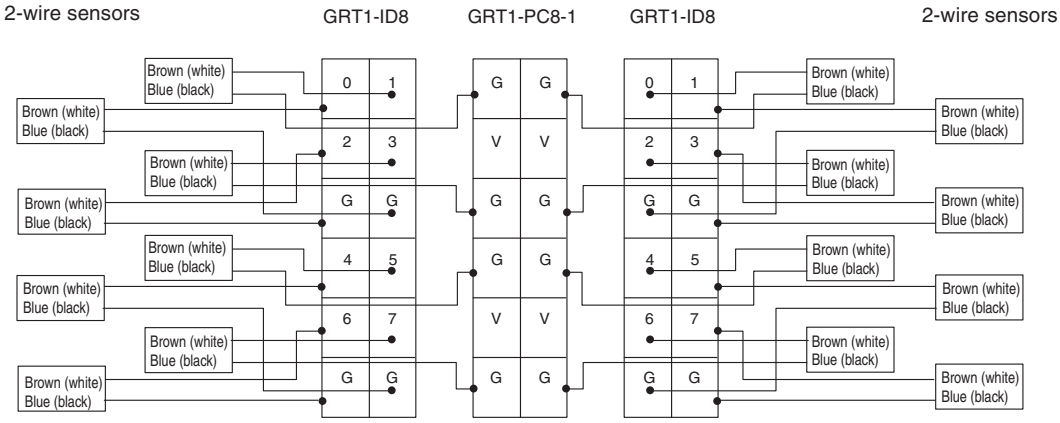

If you are connecting 2-wire sensors, you can use dual-insert rod terminals to eliminate the need for a Power Connection Unit.

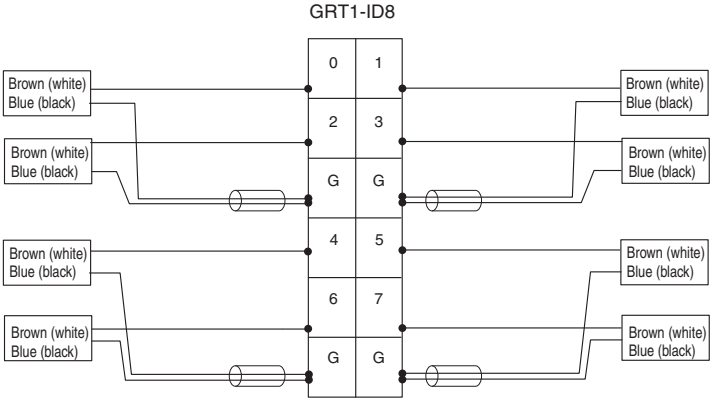

Note Wire colors in parentheses are the previous JIS colors for photoelectric and proximity sensors.

GRT1-ID8-1 (PNP)

When using 3-wire sensors, wire using the GRT1-PC8-1 I/O Power Connection Unit as shown in the following figure.

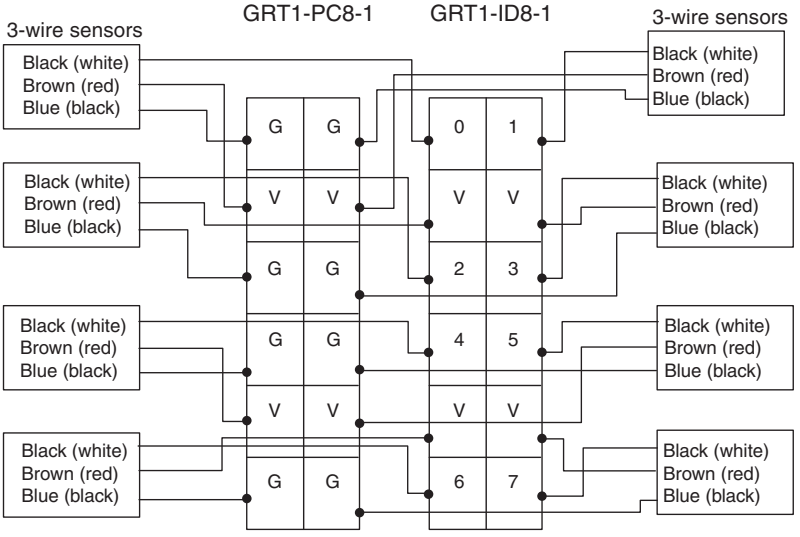

If the Unit connected on the left needs to be isolated, wire using the GRT1-PD8-1 I/O Power Feed Unit. When using the GRT1-PD8-1 I/O Power Feed Unit, however, a maximum of seven sensors can be connected, as shown in the following figure.

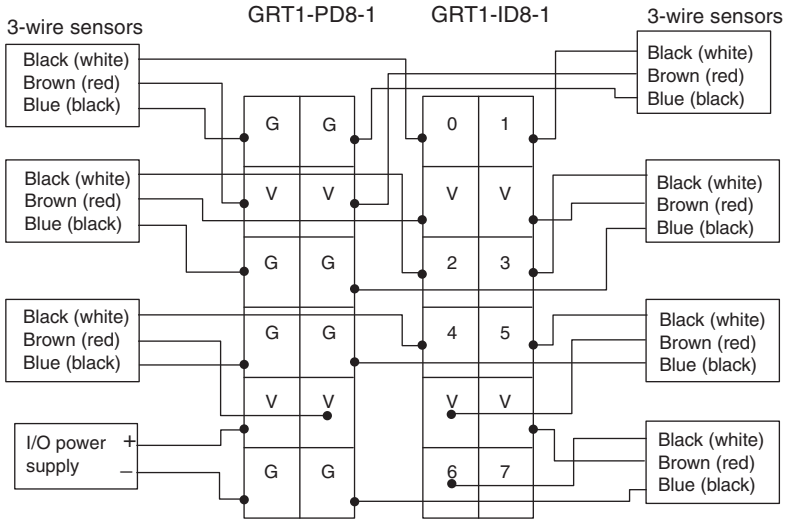

When connecting 2-wire sensors, wire using the GRT1-PC8 I/O Power Connection Unit as shown in the following figure. A single Power Supply Unit can be connected to up to two GRT1-ID8-1 Units.

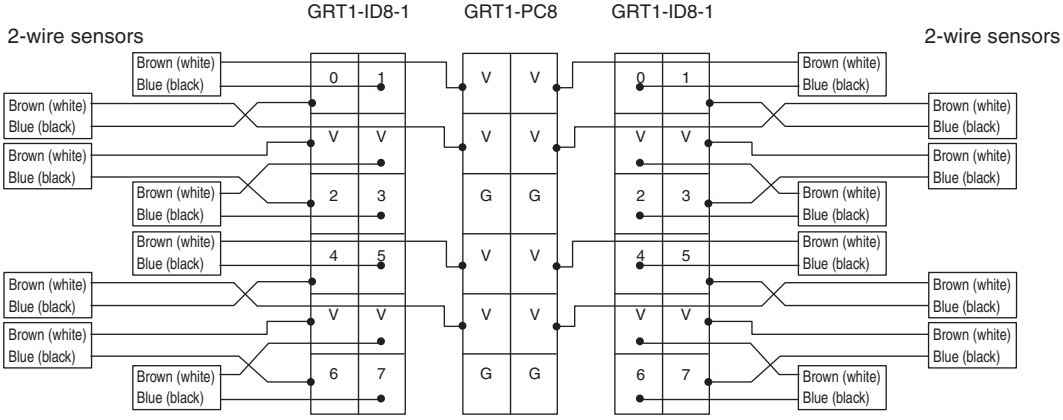

If you are connecting 2-wire sensors, you can use dual-insert rod terminals to eliminate the need for a Power Connection Unit.

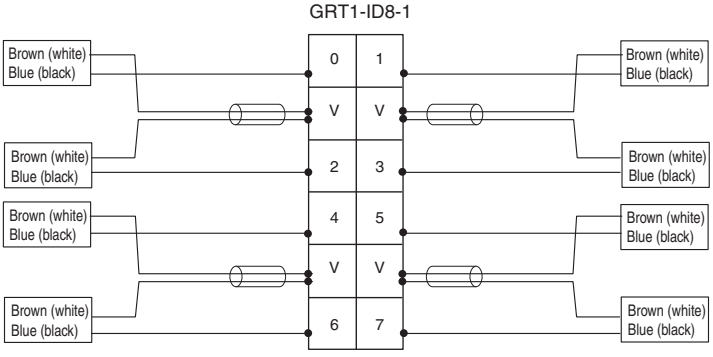

Note Wire colors in parentheses are the previous JIS colors for photoelectric and proximity sensors.

Dimensions (Same for GRT1-ID8 and GRT1-ID8-1)

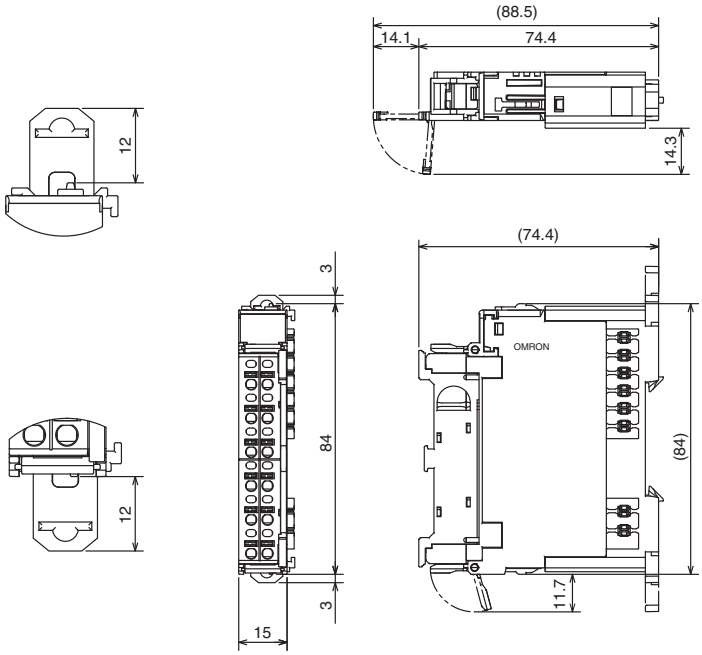

4-6-4 Eight-point Transistor Output Units: GRT1-OD8 (NPN), GRT1-OD8-1 (PNP), and GRT1-OD8G-1 (PNP)

Output Specifications

Item	Specification		
Model	GRT1-OD8	GRT1-OD8-1	GRT1-OD8G-1
Internal I/O common	NPN	PNP	PNP
Number of I/O points	8 outputs		
Rated output current	0.5 A/point max.		
Output overcurrent and short-circuit protection	Not supported.	Not supported.	Supported (with automatic recovery). (See note.)
Residual voltage	1.2 V max. (at 0.5 A between each output terminal and G)	1.2 V max. (at 0.5 A between each output terminal and V)	
Leakage current	0.1 mA max.		
ON delay time	0.5 ms max.		
OFF delay time	1.5 ms max.		
Number of circuits	8 outputs with one common		

Note With the GRT1-OD8G-1, even if a short-circuit occurs on one output, the other seven outputs will operate normally.

Component Names and Functions (Same for GRT1-OD8, GRT1-OD8-1, and GRT1-OD8G-1)

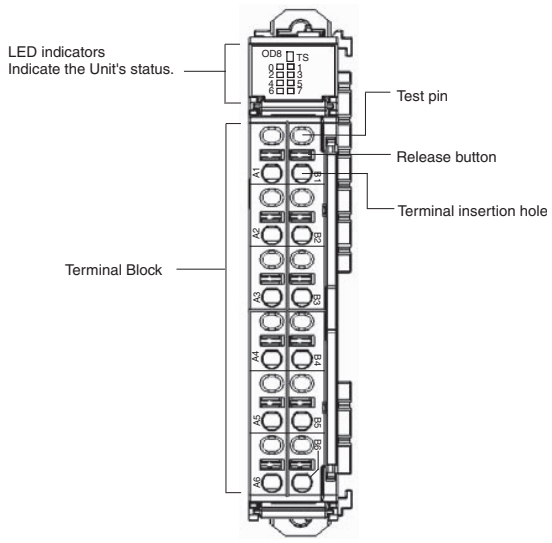

Internal Circuits

GRT1-OD8 (NPN)

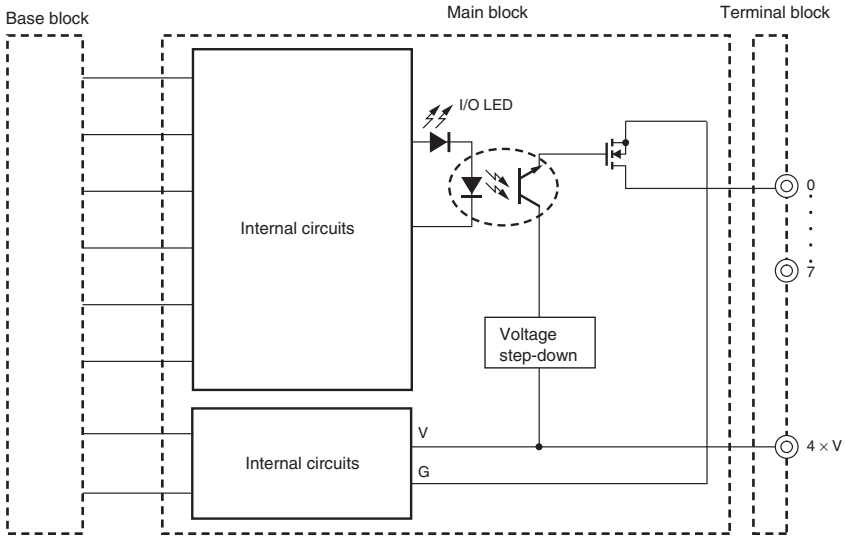

GRT1-OD8-1 (PNP)

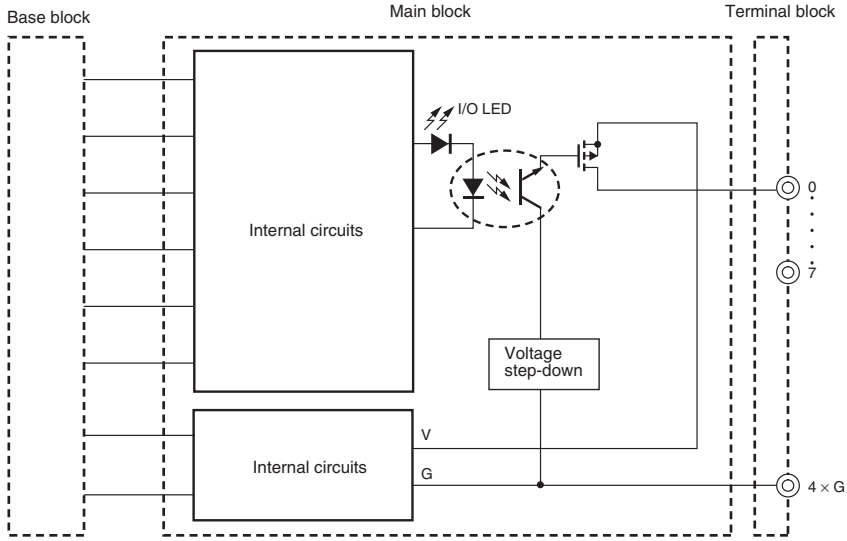

GRT1-OD8G-1 (PNP)

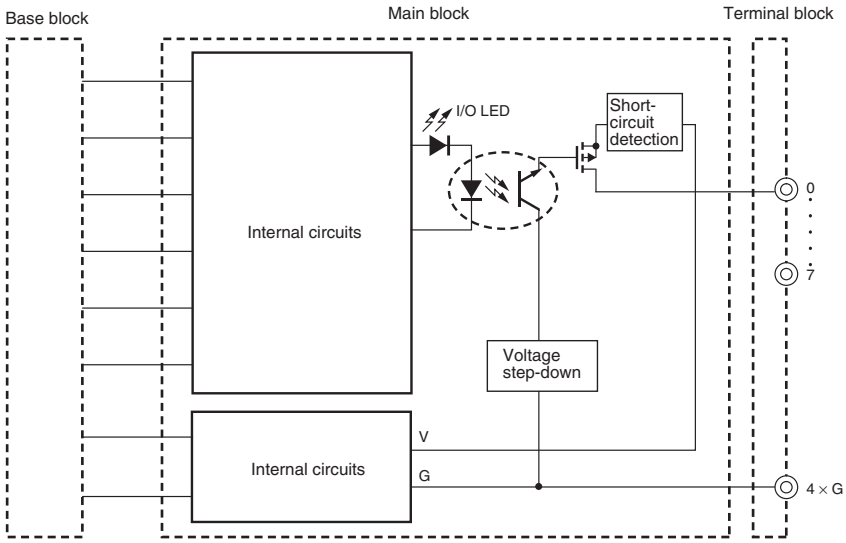

Wiring

GRT1-OD8 (NPN)

When using a GRT1-PC8 I/O Power Connection Unit, wire according to the following figure. Up to two GRT1-0D8 Units can be wired with a single I/O Power Connection Unit.

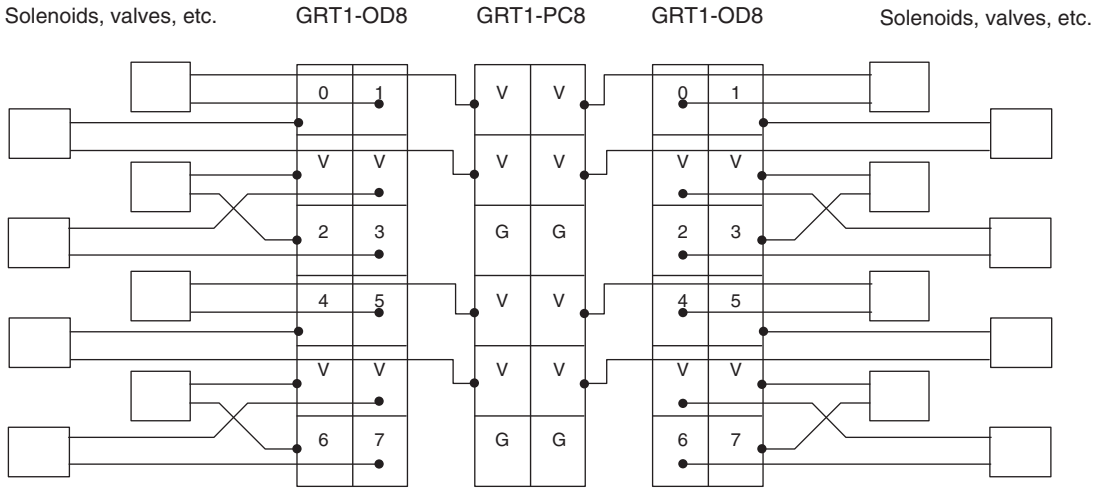

If you are connecting 2-wire sensors, you can use dual-insert rod terminals to eliminate the need for a Power Connection Unit.

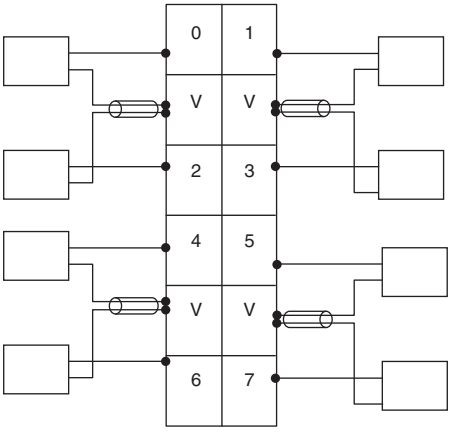

GRT1-OD8-1 (PNP)

When using a GRT1-PC8-1 I/O Power Connection Unit, wire according to the following figure. Up to two GRT1-0D8 Units can be wired with a single Power Connection Unit.

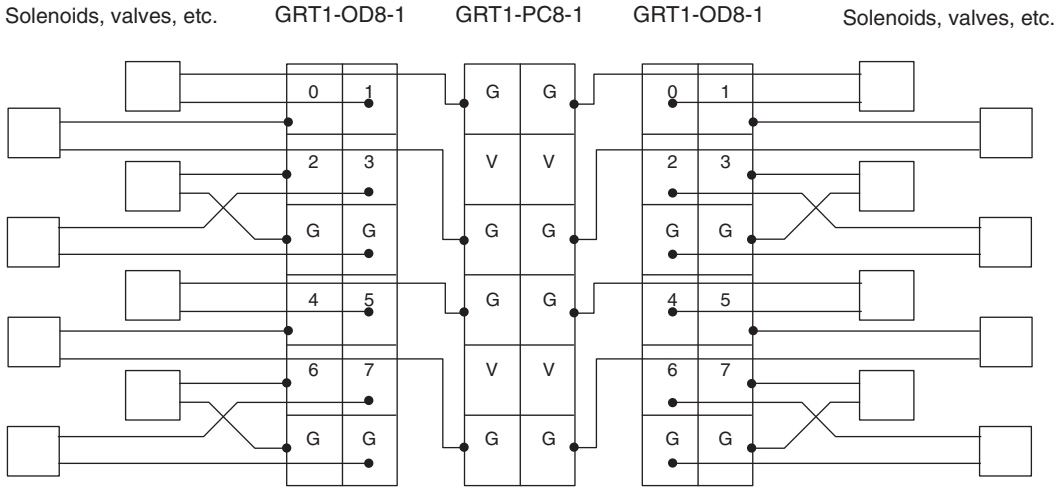

Alternately, dual-insert rod terminals can be used to eliminate the need for a Power Connection Unit.

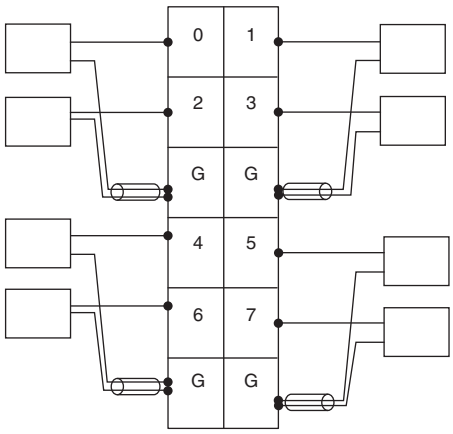

Dimensions (Same for GRT1-OD8, GRT1-OD8-1, and GRT1-OD8G-1)

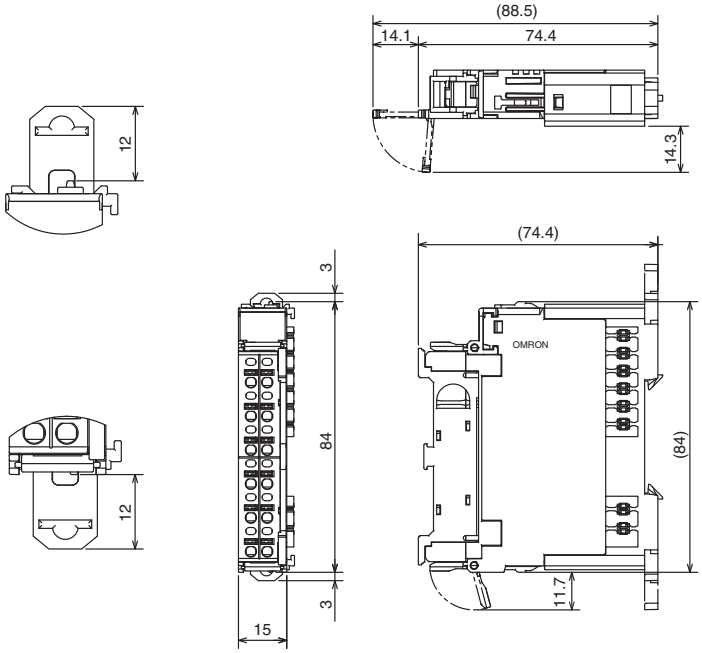

4-6-5 Two-point Relay Output Unit: GRT1-ROS2

Common Specifications

Item	Specifications
Communications power supply voltage	24 VDC (20.4 to 26.4 VDC)
I/O power supply voltage	24 VDC (20.4 to 26.4 VDC)
Noise immunity	Conforms to IEC61000-4-4, 2.0 kV (power supply line)
Vibration resistance	10 to 60 Hz: 0.7 mm double amplitude 60 to 150 Hz: 50 m/s^2
Shock resistance	150 m/s^2
Withstand voltage	500 VAC (between isolated circuits)
Insulation resistance	20 MΩ min.
Ambient operating temperature	–10 to 55°C
Ambient operating humidity	25% to 85% (with no icing or condensation)
Operating environment	No corrosive gases
Ambient storage temperature	–25 to 65°C (with no icing or condensation)
Mounting	35-mm DIN Track mounting

Output Specifications (per Relay)

Item	Specifications
Relay	FTR-MYPA018D (Fujitsu component)
Maximum switching capacity	250 VAC or 24 VDC, at 2 A
Minimum applicable load	5 VDC at 1 mA
ON delay time	15 ms max.
OFF delay time	15 ms max.

Relay Life Expectancy

Item	Specifications
Mechanical life expectancy	20,000,000 times min.
Electrical life expectancy	100,000 times min.

The life expectancy of the output contacts depends on the load that is connected. The following figure provides a guide to life expectancy for loads.

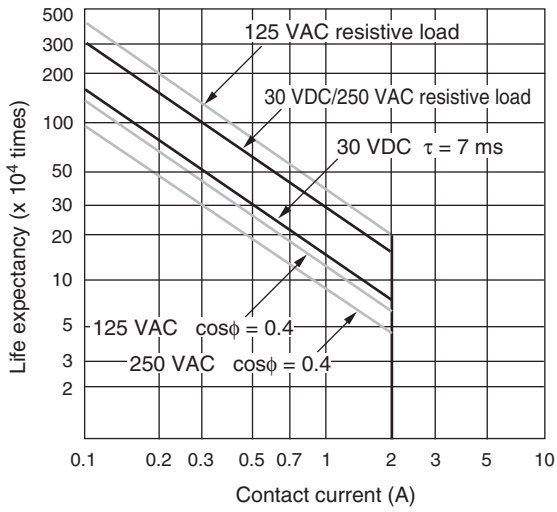

Note The figure above gives the life expectancy for individual relays. Always use the Relay Output Unit within its operating range. Using the Unit outside its operating range may result in failure of the Unit.

Component Names and Functions

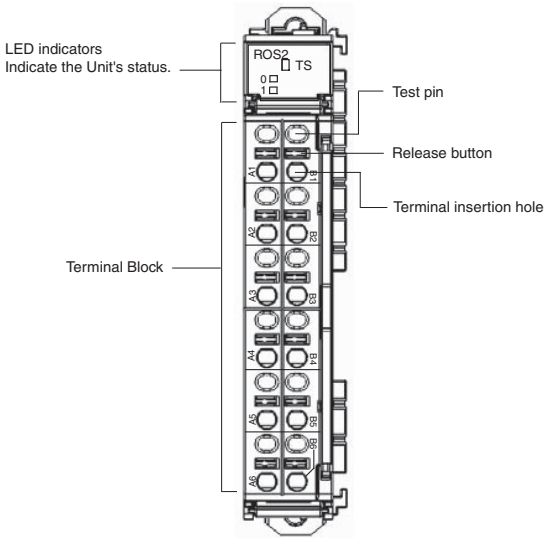

Internal Circuits

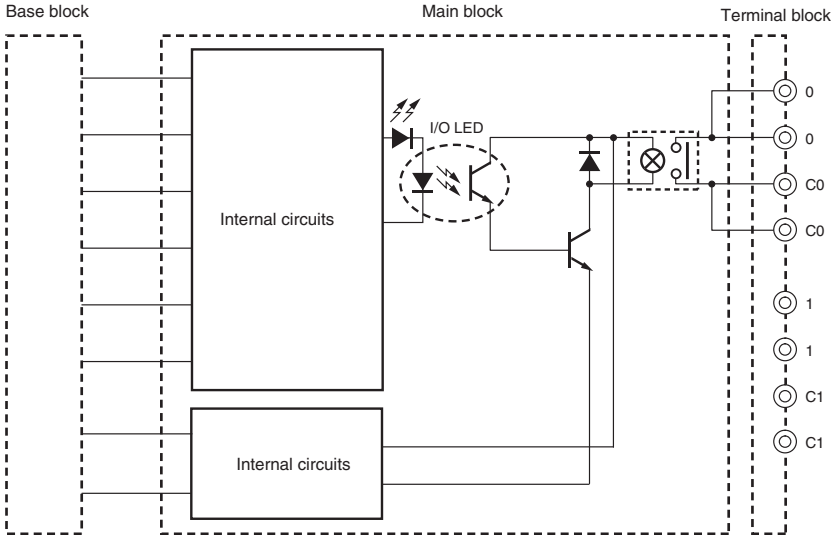

Wiring

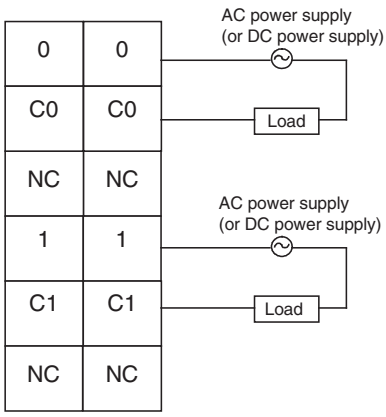

Dimensions

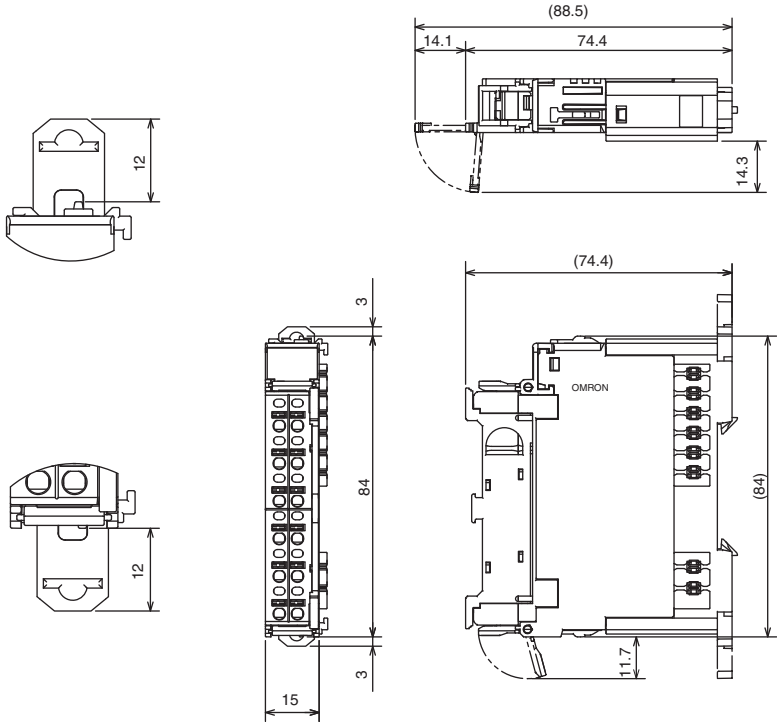

4-6-6 Four-point AC Input Units: GRT1-IA4-1 and GRT1-IA4-2

Input Specifications

Item	Specification	
Model	GRT1-IA4-1	GRT1-IA4-2
Number of I/O points	4 inputs	
I/O power supply	Not used.	
Rated input voltage	100 to 120 VAC –15% to +10%, 50/60 Hz	200 to 240 VAC –15% to +10%, 50/60 Hz
ON voltage/ON current	70 VAC min./4 mA min.	120 VAC min./4 mA min.
OFF voltage/OFF current	20 VAC max./2 mA max.	20 VAC max./2 mA max.
ON response time	10 ms max.	10 ms max.

Item	Specification	
OFF response time	55 ms max.	40 ms max.
Number of circuits	4 (no common) It is necessary to share the same neutral AC signal or make sure that the voltage between two input circuits is 600 V max. (Refer to *Wiring* on page 87.)	
Insulation resistance	20 MΩ min.	
Dielectric strength	2,500 VAC (between AC input circuit and 24-V Unit circuit)	

Component Names and Functions (Same for GRT1-IA4-1 and GRT1-IA4-2)

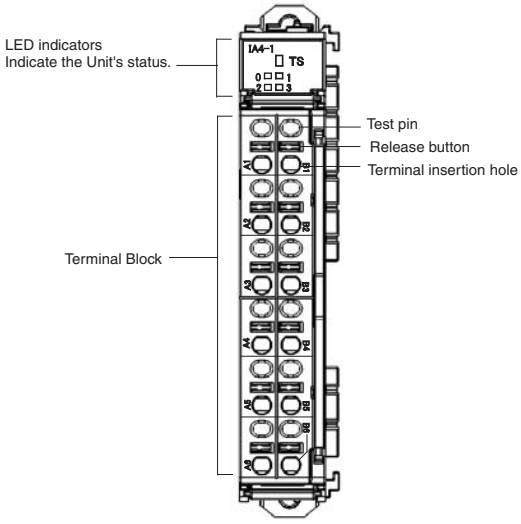

Internal Circuits (Same for GRT1-IA4-1 and GRT1-IA4-2)

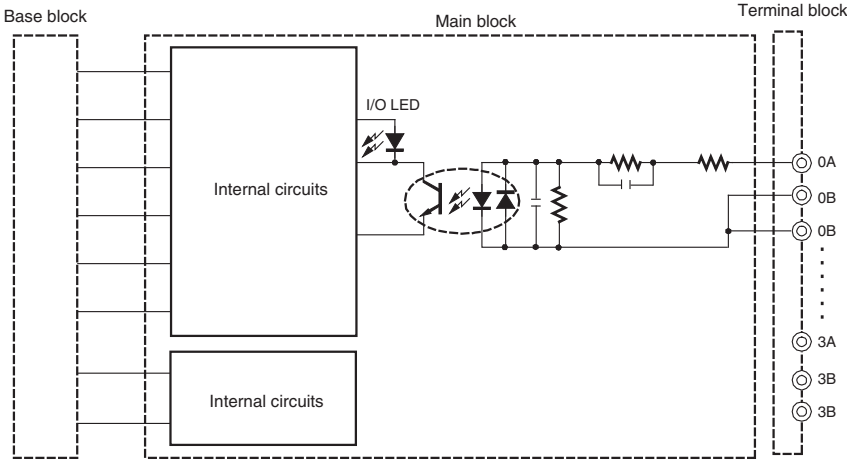

Wiring

Perform wiring as shown in the following figure.

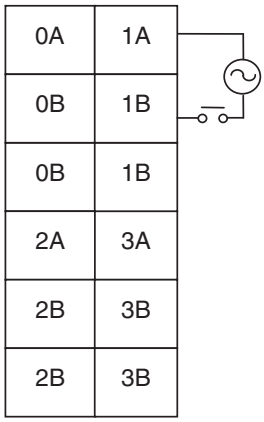

Note: No common signal for inputs.

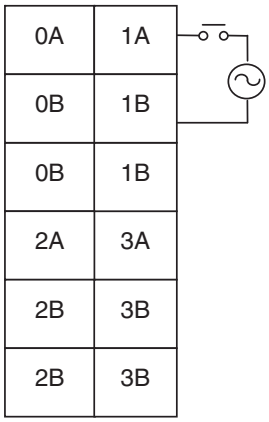

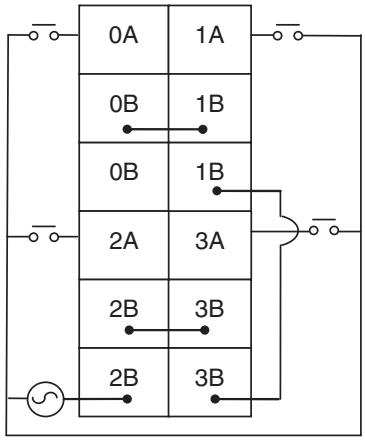

Note: Common signal for four inputs.

Dimensions

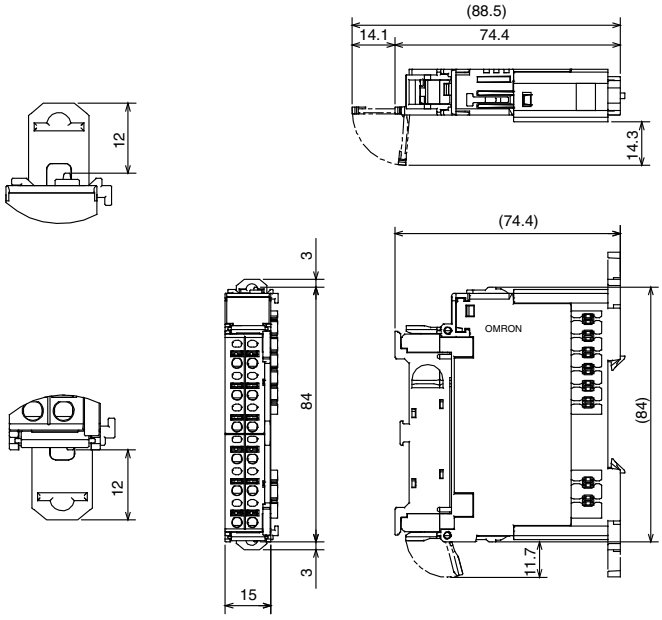

SECTION 5
Analog I/O Units

This section provides the information required to operate Analog Input Units and Analog Output Units, including functions, status areas, windows, specifications, wiring, data allocation, and settings.

5-1 Overview of Analog I/O Units 90
5-1-1 Analog I/O Units. 90
5-1-2 Comparison with Earlier Models 90
5-1-3 List of Data Processing Functions 92
5-1-4 Data Processing Flowcharts (Analog Input Units) 93
5-1-5 Selecting Data (Analog Input Units) 93
5-1-6 I/O Data 94
5-2 Status Areas. 95
5-3 Maintenance Information Window 97
5-3-1 Checking Maintenance Information 98
5-4 Analog Input Units 99
5-4-1 GRT1-AD2 Analog Input Units 99
5-4-2 I/O Data Allocation Methods 106
5-4-3 Functions and Settings 111
5-4-4 Calculating the Conversion Cycle 136
5-5 Analog Output Units 137
5-5-1 GRT1-DA2C/GRT1-DA2V Analog Output Units 137
5-5-2 I/O Data and Allocation Methods. 144
5-5-3 Functions and Setting Methods 144

5-1 Overview of Analog I/O Units

This section provides an overview of Analog I/O Units, including details on functions and setting methods for each Unit.

5-1-1 Analog I/O Units

In addition to the functions common to the GRT1 Series (backup, restore, online conversion, etc.), other functions specific to Analog I/O Units (scaling, peak/bottom hold, etc.) are available. Analog Input Units are also able to internally perform math on analog input values, which previously required ladder programming in the host PLC. Analog data can be selected from the six values obtained from math operations and allocated as I/O in combination with Generic Status Flags or other status information. The Setting Tool can be used to allocate this status data, and to set functions specific to Monitor/Analog I/O Units and perform monitoring.

5-1-2 Comparison with Earlier Models

Analog Input Units

Unit		**GRT1 Series**	**DRT2 Series**
Model		**GRT1-AD2**	**DRT2-AD04**
Analog points		2 inputs	4 inputs
Input range (signals)		0 to 5 V, 1 to 5 V, 0 to 10 V, –10 to 10 V, 0 to 20 mA, 4 to 20 mA	
AD conversion cycle		2 ms/2 points	By setting the number of conversion points (1 to 4 points), the conversion cycle can be shortened (e.g., 4 points: 4 ms max.) **Note** The conversion cycle will be slightly different when the math operations are used.
AD conversion data		0 to 5 V, 1 to 5 V, 0 to 10 V, 0 to 20 mA, 4 to 20 mA: 0000 to 1770 hex –10 to 10 V: F448 to 0BB8 hex **Note** Two's complement	
Resolution		1/6,000 (full scale)	
Unit power supply		Supplied from slice bus.	Supplied from communications power supply.
Communications power supply current consumption		None	90 mA max.
Overall accuracy	25°C	Voltage input: ±0.3% FS; Current input: ±0.4% FS	
	–10 to 55°C	Voltage input: ±0.6% FS; Current input: ±0.8% FS	
Allocated I/O data		Default: Analog input values for 2 points The Setting Tool can be used to allocate peak value, bottom value, top value, valley value, rate of change, comparator results, etc.	Default: Analog input values for 4 points The DeviceNet Configurator can be used to allocate peak value, bottom value, top value, valley value, rate of change, comparator results, Generic Status Flags, etc.
Input switching (Sets number of AD conversion points)		Supported. (Set using DIP switch: Select either 1 or 2 points)	Supported (Set using DeviceNet Configurator: Select from 1 to 4 points)
Input range switching		Using DIP switch: Inputs 0 and 1 share setting. Using Setting Tool: Can be set separately.	• Using DIP switch: Inputs 0 and 1 share setting, Inputs 2 and 3 share setting. • Using DeviceNet Configurator: Inputs 0 to 3 set separately.
Node address setting		No setting required.	Set using the rotary switches or the DeviceNet Configurator.
Baud rate setting		No setting required.	Automatically detected: Uses baud rate set for Master Unit.

Unit	GRT1 Series	DRT2 Series
Model	**GRT1-AD2**	**DRT2-AD04**
Moving average	Supported. (Set using Setting Tool.)	Supported. (Set using DeviceNet Configurator.)
Off-wire detection	Supported.	
Scaling, offset compensation, peak/bottom hold, top/valley hold, rate of change operations, comparator, user adjustment (maintenance function), cumulative counter (maintenance function), last maintenance date (maintenance function)	Supported. (Set using Setting Tool.)	Supported. (Set using DeviceNet Configurator.)

Analog Output Units

Unit		GRT1 Series		DRT2 Series
Model		**GRT1-DA2V (Voltage Output)**	**GRT1-DA2C (Current Output)**	**DRT2-DA02**
Analog points		2 outputs		
Output signal range		0 to 5 V, 1 to 5 V, 0 to 10 V, –10 to 10 V	0 to 20 mA, 4 to 20 mA	0 to 5 V, 1 to 5 V, 0 to 10 V, –10 to 10 V, 0 to 20 mA, 4 to 20 mA
Conversion time		2 ms/2 points		
DA conversion data		0 to 5 V, 1 to 5 V, 0 to 10 V: 0000 to 1770 hex –10 to 10 V: F448 to 0BB8 hex **Note** Two's complement	0 to 20 mA, 40 to 20 mA: 0000 to 1770 hex **Note** Two's Complement	0 to 5 V, 1 to 5 V, 0 to 10 V, 0 to 20 mA, 4 to 20 mA: 0000 to 1770 hex –10 to 10 V: F448 to 0BB8 hex **Note** Two's complement
Resolution		1/6,000 (full scale)		
Unit power supply		Supplied by slice bus.		Supplied by communications power supply.
Communications power supply current consumption		None		120 mA max.
Overall accuracy	25°C	±0.4% FS	±0.4% FS (See note.)	Voltage output: ±0.3% FS Current output: ±0.4% FS
	–10 to 55°C	±0.8% FS	±0.8% FS (See note.)	Voltage output: ±0.6% FS Current output: ±0.8% FS
Data allocated in I/O		Only Analog output values for 2 outputs		Default: Analog output values for 2 points The DeviceNet Configurator can be used to allocate Generic Status Flags.
Output range switching		Set using the DIP switch or Setting Tool.		Set using the DIP switch or the DeviceNet Configurator.
Node address setting		No setting required.		Set using the rotary switches or the DeviceNet Configurator.
Baud rate setting		No setting required.		Automatically detected: Uses the baud rate set for the Master Unit.
Communications error output		Set using the Setting Tool.		Set using the DeviceNet Configurator.
Scaling, user adjustment (maintenance function), cumulative counter (maintenance function), last maintenance date (maintenance function)		Supported. (Set using the Setting Tool.)		Supported. (Set using the DeviceNet Configurator.)

Note In 0- to 20-mA mode, accuracy cannot be ensured at 0.2 mA or less.

5-1-3 List of Data Processing Functions

The following tables list the data processing functions that can be used with Analog I/O Units. Refer to *5-4-3 Functions and Settings* for details on functions and setting methods.

GRT1-AD2 Analog Input Units

Function	Details	Default
Moving average	Calculates the average of the past eight analog input values, and produces a stable input value even when the input value is unsteady.	Moving average disabled.
Setting the number of AD conversion points	By reducing the number of input conversion points, the conversion cycle speed can be increased. For details, refer to *5-4-4 Calculating the Conversion Cycle.*	2-point conversion
Scaling	Performs scaling. Scaling allows conversion of values between 0 and 6,000 into values using the industry unit required by the user. It reduces the number of operations requiring ladder programming in the Master CPU Unit. Scaling also supports an offset function for compensating for mounting errors in sensors and other devices.	0 to 6,000
Peak/bottom hold	Holds the maximum and minimum analog input values.	Disabled
Top/valley hold	Holds the top and valley values for analog input values.	Disabled
Rate of change	Calculates the rate of change for analog input values.	Disabled
Comparator	Compares the analog input value or an analog value after math processing (i.e., value for peak, bottom, top, valley, rate of change) with the four set values HH, H, L, and LL, and indicates the result with the Analog Status Flags.	Disabled
Off-wire detection	Detects disconnections of analog inputs. (Valid only for the input ranges 4 to 20 mA and 1 to 5 V)	Enabled
User adjustment	Adjusts the input when an offset occurs in the input voltage or current.	Disabled
Cumulative counter	Calculates an approximation to the integral of analog input values over time.	Disabled
Last maintenance date	Records the date of the last maintenance in the Unit.	2005/1/1

GRT1-DA2V/GRT1-DA2C Analog Output Units

Function	Details	Default
Scaling	Performs scaling. Scaling allows conversion of values between 0 and 6,000 into values using the industry unit required by the user. It reduces the number of operations required in ladder programming in the Master.	Disabled (0 to 6,000)
User adjustment	Adjusts the output when an offset occurs in the output voltage or current.	Disabled
Cumulative counter (maintenance function)	Calculates an approximation to the integral of analog output values over time.	Disabled
Error output value setting	Sets the value output when a communications error occurs for each output.	Low limit
Last maintenance date	Records the date of the last maintenance in the Unit.	2005/1/1

5-1-4 Data Processing Flowcharts (Analog Input Units)

Analog Input Value

The following math operations can be performed on the external analog input value. The values obtained after processing (analog input values) can be allocated as I/O for the Master.

- Scaling to desired industry unit
- Moving average processing

Other Operation Results

After moving average and scaling processing, the analog input value can be processed using the following operations. The values after processing are called peak value, bottom value, top value, valley value, rate of change, and cumulated value.

- Peak/hold operation
- Top/valley operation
- Rate of change operation
- Cumulative operation (maintenance function)

Analog processing is performed according to the following flowchart.

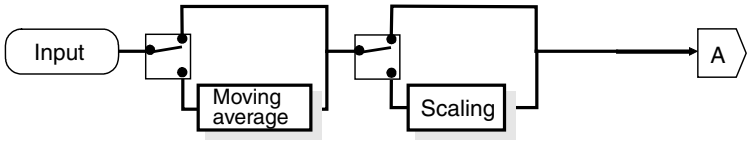

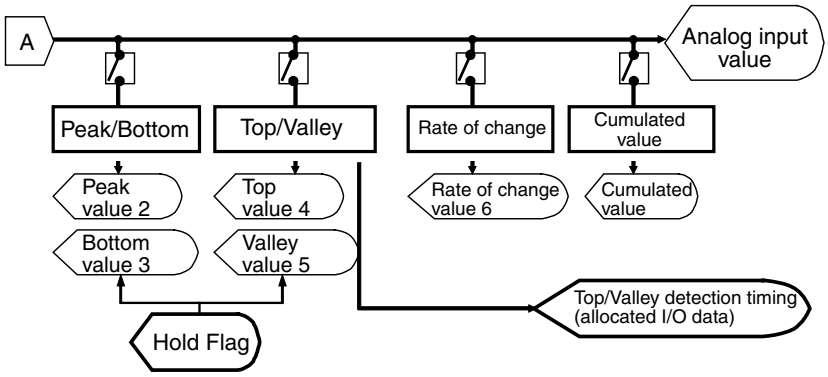

Data Flow

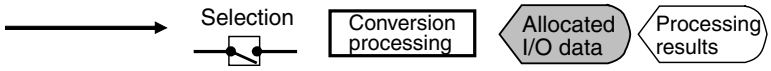

5-1-5 Selecting Data (Analog Input Units)

After performing math operations, select up to two of the six resulting values to allocate as I/O, from the analog input value, peak value, bottom value, top value, valley value, and rate of change. The selected data is referred to as “analog data” and can be allocated for the Master individually or in combination with Status Flags. The data is selected using the Setting Tool. Comparison operations (comparator function) with four alarm set values can be performed for analog data.

Flow of Data in Analog Input Units

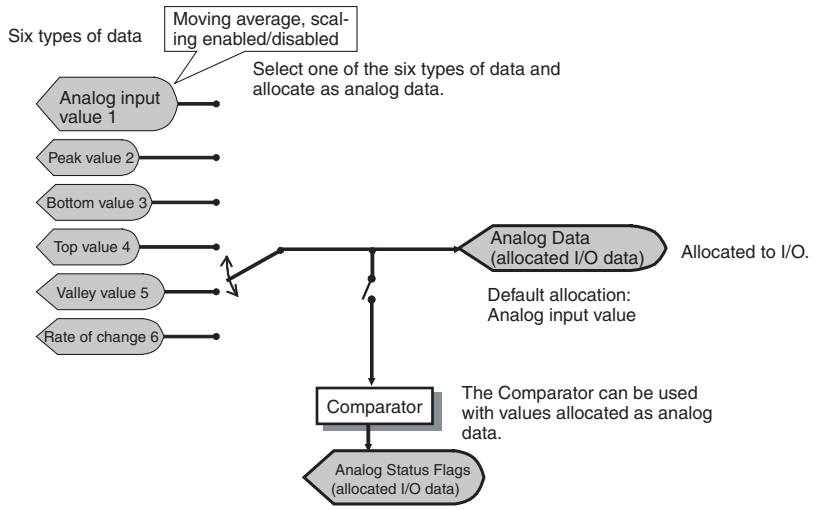

Note By default, analog input values are allocated as I/O just as they are.

For Inputs 0 and 1, analog data can be separately selected, as shown in the following diagram.

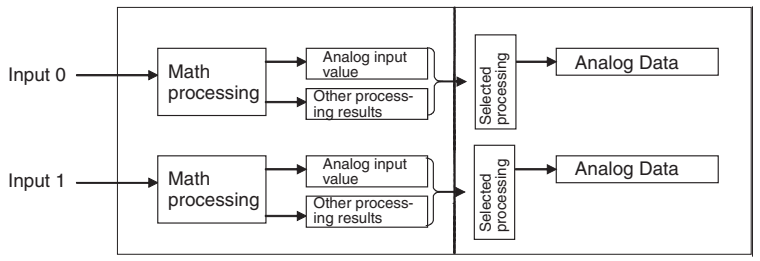

5-1-6 I/O Data

GRT1-AD2 Analog Input Units

Analog Input Units support the following four types of input data, and one type of output data. The required data can be allocated for use as I/O.

Input Data

I/O data	Details
Analog Data (4 input bytes)	• Used to monitor analog data. • Select one type of data from analog input value, peak value, bottom value, top value, valley value, or rate of change. (Default allocation: Analog input value) **Note** The comparator can be used with analog data.
Top/Valley Detection Timing Flags (2 input bytes)	Top/Valley Detection Timing Flags are allocated in one word. These flags are allocated together with the top value or valley value and are used to time reading the values held in the Master.
Analog Status Flags (2 input bytes)	Used to allocate the bits for the Comparator Result Flags, Top/Valley Detection Timing Flags, and Off-wire Detection Flag. The function of each bit is as follows: • Comparator Result Flags Allow control of the judgement results only, without allocating analog values • Top/Valley Detection Timing Flags Used to time reading the values held as the top and valley values when both the top and value values are allocated at the same time. • Off-wire Detection Flags Disconnections can be detected even when the analog values are not allocated.
Analog Data + Top/Valley Detection Timing Flags (6 input bytes)	Allocation of Analog Data (4 bytes) followed by Top/Valley Detection Timing Flags (2 input bytes)

Output Data

I/O data	Details
Hold Flags (1 output byte)	Used with each of the hold functions (peak, bottom, top, and valley) to control the execution timing of hold functions from the Master.

GRT1-DA2□ Analog Output Units

Analog Output Units support one type output data. Allocate the required data as shown in the following tables.

Output Data

Data Type	Details
Output data (4 output bytes)	Used to allocate analog output data.

5-2 Status Areas

An Analog I/O Unit has two internal Status Areas. Bits are set with respect to thresholds set by the user for each function. When any bit turns ON in one of these Status Areas, the relevant Communications Unit Status Flag turns ON. The Master Unit is notified of the status of Communications Unit Status Flags. Information in I/O Unit Status Areas can be read using the Setting Tool.

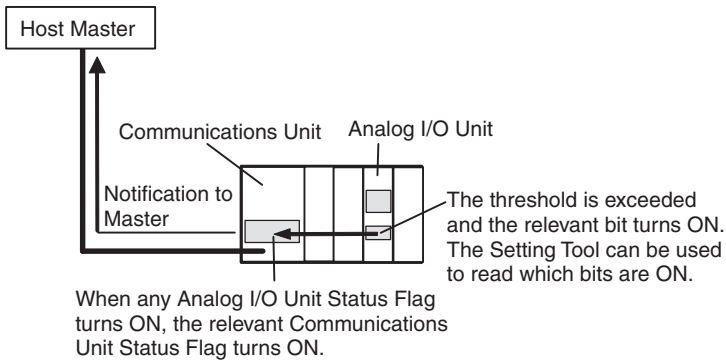

GRT1-AD2

Warning Status Area

The Analog Input Unit's Warning Status Area is configured of the following 16 bits. The Warning Status Area provides notification of minor errors detected in the Unit.

Bit	Contents	Description
0	Reserved.	---
1	Reserved.	---
2	Reserved.	---
3	Unit Maintenance Flag OFF: Normal; ON: Error (Over threshold or 87672 hours)	Monitors the power-ON time set as the threshold for the Unit conduction time monitoring function. Also monitors whether 87672 hours (10 years) have elapsed.
4	Reserved.	---
5	Reserved.	---
6	Reserved.	---
7	Reserved.	---
8	Analog Range Flag OFF: Within range (below monitoring set value) ON: Out of range (at or above monitoring set value)	Turns ON when the analog data exceeds the range that can be displayed or the monitoring value set for the monitor function.

Bit	Contents	Description
9	Cumulative Counter Flag OFF: Within range (below monitoring set value) ON: Out of range (at or above monitoring set value)	Turns ON when the cumulative value exceeds the monitoring set value.
10	Reserved.	---
11	Reserved.	---
12	Reserved.	---
13	Reserved.	---
14	Reserved.	---
15	Reserved.	---

Alarm Status Area

The Analog Input Unit's Alarm Status Area is configured of the following 16 bits. The Alarm Status Area provides notification of serious errors detected in the Unit.

Bit	Contents	Description
0	Reserved.	---
1	EEPROM data error	OFF: Normal; ON: Error
2	Reserved.	---
3	Reserved.	---
4	Reserved.	---
5	Reserved.	---
6	Reserved.	---
7	Reserved.	---
8	Off-wire Detection Flag	OFF: Normal; ON: Disconnection
9	Analog hardware error	OFF: Normal; ON: Error in analog hardware
10	Reserved.	---
11	Reserved.	---
12	Reserved.	---
13	Reserved.	---
14	Reserved.	---
15	Reserved.	---

GRT1-DA2□

Warning Status Area

The Analog Output Unit's Warning Status Area is configured of the following 16 bits. The Warning Status Area provides notification of minor errors detected in the Unit.

Bit	Contents	Description
0	Reserved.	---
1	Reserved.	---
2	Reserved.	---
3	Unit Maintenance Flag OFF: Normal; ON: Error (over threshold)	Monitors the power-ON time set as the threshold for the Unit conduction time monitoring function.
4	Reserved.	---
5	Reserved.	---
6	Reserved.	---
7	Reserved.	---

Bit	Contents	Description
8	Error Output Flag OFF: Normal; ON: Error being output	ON while error is being output.
9	Cumulative Counter Flag OFF: Within range (below monitoring set value) ON: Out of range (at or above monitoring set value)	Turns ON when the cumulative value exceeds the monitoring set value.
10	Reserved.	---
11	Reserved.	---
12	Reserved.	---
13	Reserved.	---
14	Reserved.	---
15	Reserved.	---

Alarm Status Area

The Analog Output Unit's Alarm Status Area is configured of the following 16 bits. The Alarm Status Area provides notification of serious errors detected in the Unit.

Bit	Contents	Description
0	Reserved.	---
1	EEPROM data error	OFF: Normal; ON: Error
2	Reserved.	---
3	Reserved.	---
4	Reserved.	---
5	Reserved.	---
6	Reserved.	---
7	Reserved.	---
8	Reserved.	---
9	Analog hardware error	OFF: Normal; ON: Error in analog hardware
10	Reserved.	---
11	Reserved.	---
12	Reserved.	---
13	Reserved.	---
14	Reserved.	---
15	Reserved.	---

5-3 Maintenance Information Window

This section describes the Maintenance Information Window, which can be used to monitor the status of Analog I/O Units. The Monitor Device Window can be used to check the same Unit status information, but the examples in this section use the Maintenance Information Window.

5-3-1 Checking Maintenance Information

There are two ways to check maintenance information. One way is to right-click in the Main Window of the Setting Tool and select ***Maintenance Information***. The other way is to double-click the Unit in the Maintenance Mode Window, click the **I/O Module** Tab, select the desired Unit, and click the **View** Button to display the Maintenance Information Window of the I/O Unit.

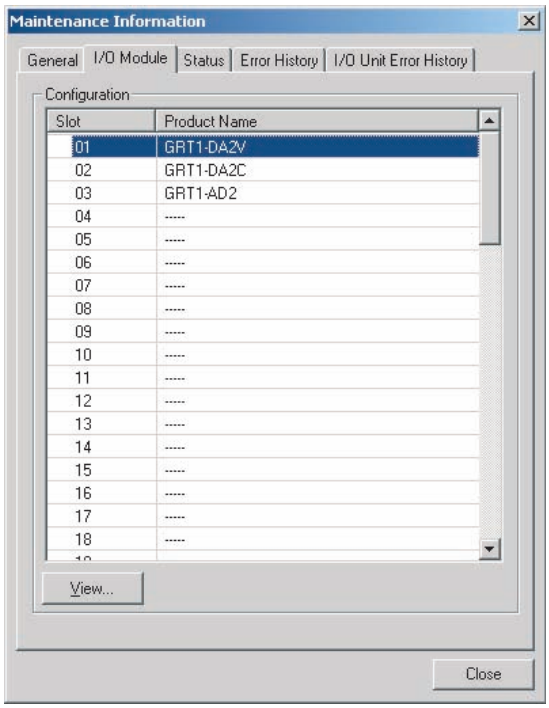

Maintenance Information Window

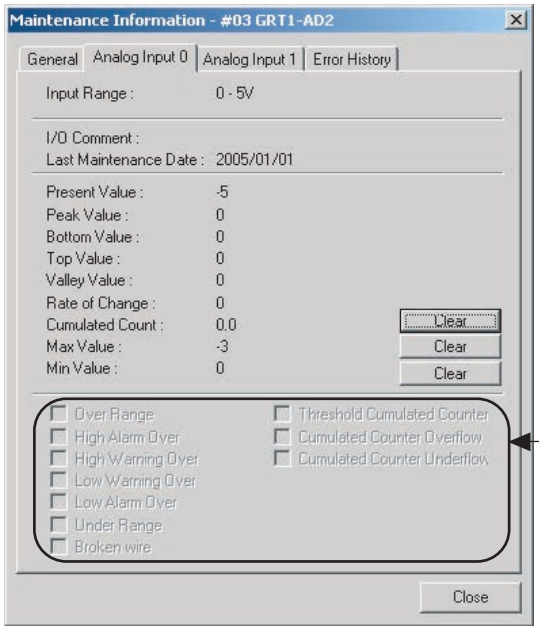

Display Area

Item	Description
I/O Comment	Displays up to 32 characters of text as a comment. A separate comment can be set for each input.
Last Maintenance Date	Displays the last maintenance date and time. (All models.)
Present Value	Displays the present analog value. (All models.) Displays data derived from the analog value, including the Peak Value, Bottom Value, Top Value, Valley Value, Rate of Change, Cumulated Count, Maximum Value, and Minimum Value. For details, refer to the descriptions of individual functions and setting methods.

Status Check Boxes

■ All Analog I/O Unit Models

Item	Description
Threshold Cumulative Counter Over	On when the cumulative counter value exceeds the set value.
Cumulative Counter Overflow	ON when there is an overflow in the cumulative counter value.
Cumulative Counter Underflow	ON when there is an underflow in the cumulative counter value.

■ GRT1-AD2

Item	Description
Over Range/Under Range	ON when the analog data is above or below the displayable range.
Alarm Over/Warning Over	ON when the analog data is above or below the monitoring set values set in the comparator function.
Broken wire	ON when a wire is broken or disconnected. (Used only for Analog Input Units when the input range is 1 to 5 V or 4 to 20 mA.)

Error History Window

For details on the Error History Window, refer to *4-5-1 Checking Maintenance Information*.

5-4 Analog Input Units

5-4-1 GRT1-AD2 Analog Input Units

General Specifications

Item	Specifications
Unit power supply voltage	24 VDC (24 VDC –15% to +10%)
I/O power supply voltage	I/O power supply not required.
Noise immunity	Conforms to IEC 61000-4-4. 2.0 kV (power lines)
Vibration resistance	10 to 60 Hz, 0.7-mm double amplitude, 60 to 150 Hz, 50 m/s^2
Shock resistance	150 m/s^2
Dielectric strength	500 VAC for 1 min. with 1-mA sensing current (between isolated circuits)
Ambient temperature	–10 to 55°C (with no icing or condensation)
Ambient humidity	25% to 85%
Operating environment	No corrosive gases

Item	Specifications
Storage temperature	–25 to 65°C (with no icing or condensation)
Mounting	35-mm DIN Track mounting

Performance Specifications

Item		Specifications	
		Voltage input	Current input
Input points		2 points (inputs 0 to 1)	
Input signal range		0 to 5 V 1 to 5 V 0 to 10 V –10 to 10 V	0 to 20 mA 4 to 20 mA
Input range setting method		• DIP switch: Inputs 0 and 1 share the same setting. • Setting Tool: Inputs 0 to 1 can be set separately.	
Maximum signal input		±15 V	±30 mA
Input impedance		1 M Ω min.	Approximately 250 Ω
Resolution		1/6,000 (full scale)	
Overall accuracy	25°C	±0.3% FS	±0.4% FS
	–10 to 55°C	±0.6% FS	±0.8% FS
Analog conversion cycle		2 ms max./2 points (when math operations are not used)	
AD conversion data		–10 to 10 V range: F448 to 0BB8 hex full scale (–3,000 to 3,000) Other ranges: 0000 to 1770 hex full scale (0 to 6,000) AD conversion range: ±5% FS of the above data ranges.	
Isolation method		Photocoupler isolation (between input and communications lines) No isolation between input signal wires	
I/O connection method		Screwless Terminal block	

Names and Functions of Parts

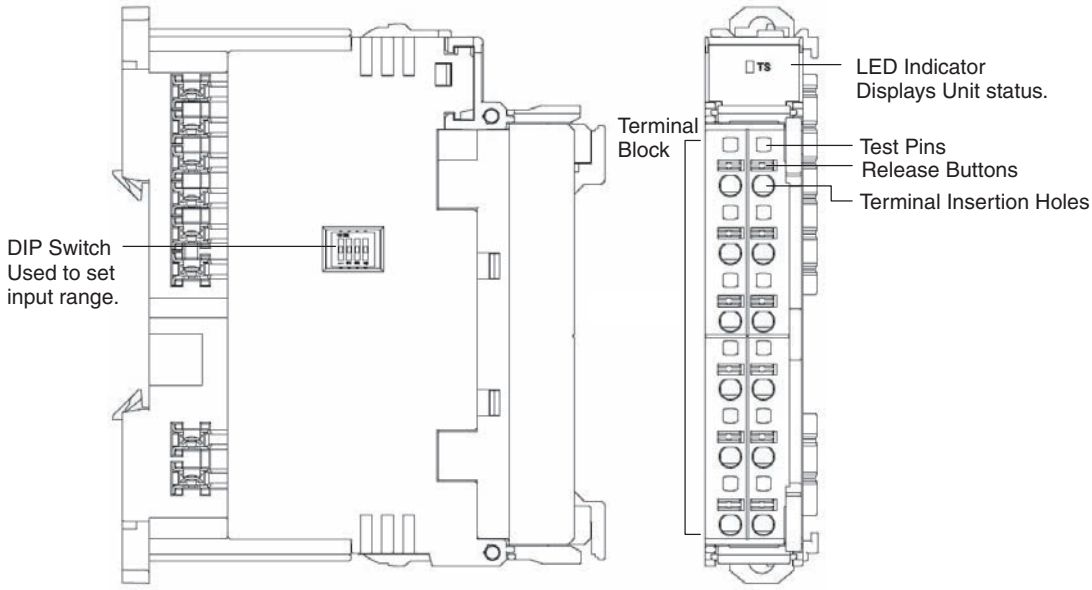

Setting the Input Range

Setting with the DIP Switch

The input signal range can be set using the DIP switch or the Setting Tool.

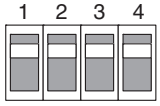

Each pin is set according to the following table.

Pin No.	Setting	Specifications
1	Input Terminal: Input range setting for Inputs 0 and 1.	Default setting: All pins OFF
2		
3		
4	Input range setting method	OFF: Set using Setting Tool. ON: Set using DIP switch. (The DIP switch settings are disabled when this pin is OFF, i.e., when the Setting Tool is used.) **Note** Default setting: OFF

Note

1. Always set pin 4 to ON if the DIP switch is to be used to set the ranges. If this pin is OFF, the DIP switch settings will not be enabled.
2. The DIP switch settings are read when the power is turned ON.
3. If pin 4 is set to ON, you will not be able to set any functions, including the range setting, from the Setting Tool. Always set pin 4 to OFF when using the Setting Tool.

Input Range Settings

■ **Inputs 0 and 1 (Shared Setting)**

Input range	Pin 1	Pin 2	Pin 3
0 to 5 V	OFF	OFF	OFF
1 to 5 V	ON	OFF	OFF
0 to 10 V	OFF	ON	OFF
–10 to 10 V	ON	ON	OFF
4 to 20 mA	OFF	OFF	ON
0 to 20 mA	ON	OFF	ON
Cannot set for other ranges.	---	---	---

Setting Tool Procedure (Example: DeviceNet Configurator)

1,2,3...

1. In the Network Configuration Window for the Slice I/O Terminal, double-click the icon of the Slice I/O Terminal that is to be set. Alternatively, right-click the icon and select ***Parameters - Edit***. The Edit Device Parameters Window will be displayed.
2. Click the **I/O Module** Tab.
3. Click the **Edit** Button on the *I/O Module* Tab Page. The Edit Unit Parameters Window will be displayed.
4. Select the tab page for the input where the range is to be changed.
5. Select the desired range from the pull-down menu in the *Input Range* Field.

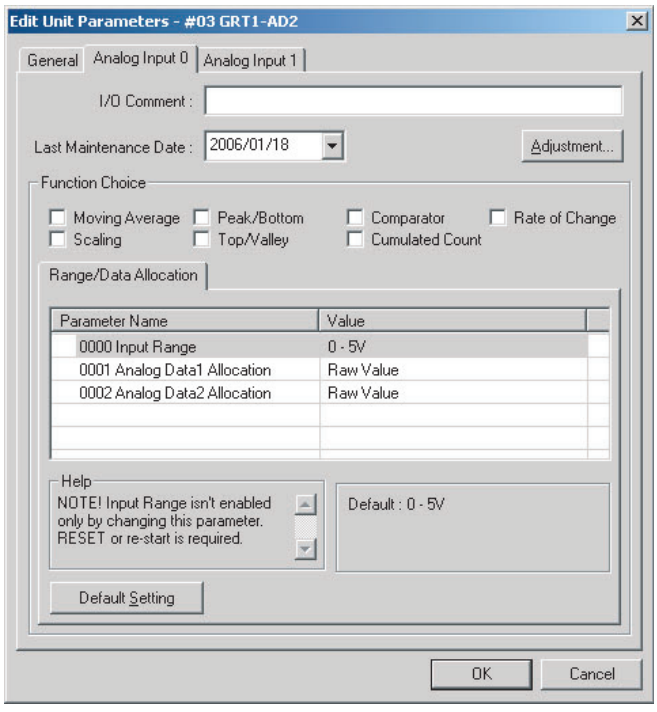

6. Return to the *General* Tab Page, click the **Download** Button, and then click the **Reset** Button to reset the Unit.
7. Click the **OK** Button to exit the window.

Internal Circuits

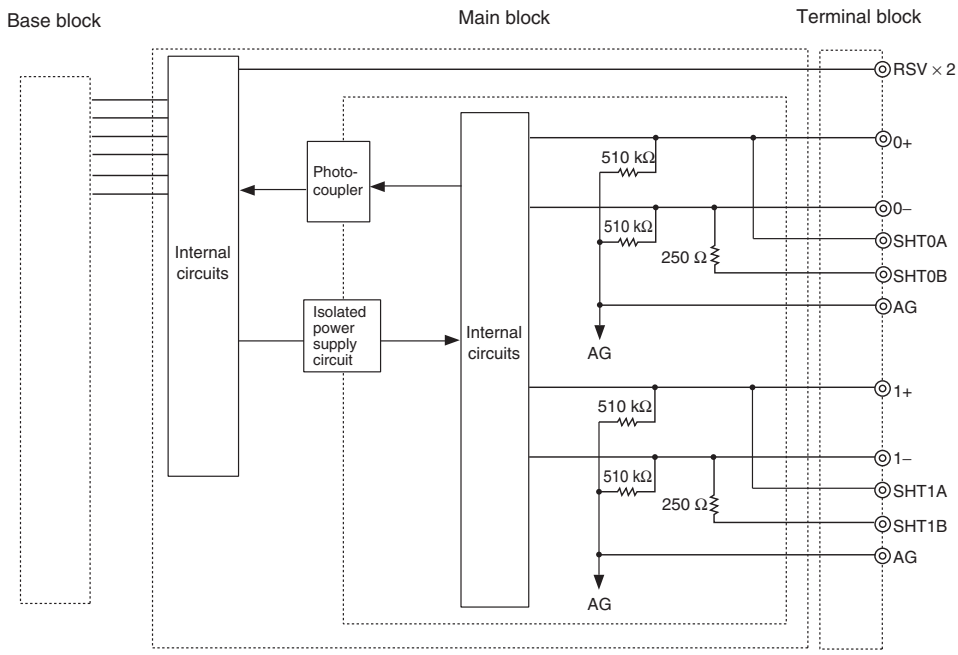

Wiring

Connect the terminals of the Analog Input Unit for each Input Unit according to the following diagrams, depending on whether a voltage input or a current input is being used.

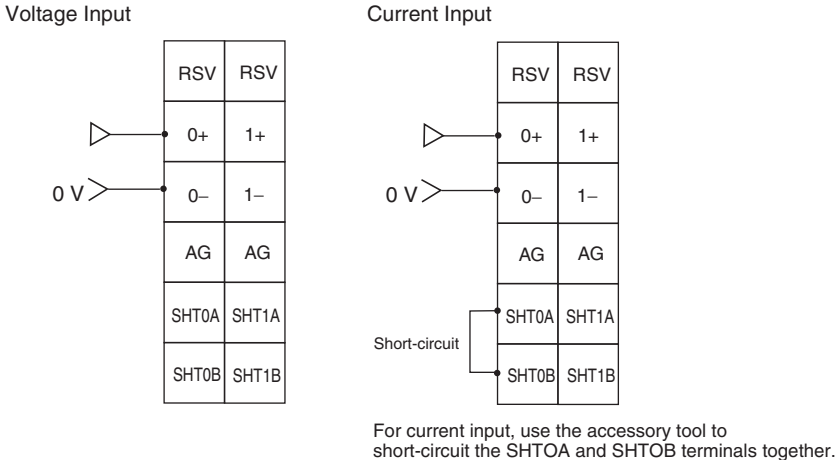

Note Do not wire the RSV terminal. This terminal is used to connect an internal signal for heat radiation.

Input Range and Conversion Data

The analog data that is input will be converted to digital data according to the input range, as described here. If the input exceeds the input range, the AD conversion data will be fixed at the upper or lower limit.

■ Input Range: 0 to 5 V

The voltage range 0 to 5 V corresponds to 0000 to 1770 hex (0 to 6,000). The convertible data range is FED4 to 189C hex (–300 to 6,300). Negative volt-

ages are expressed as two's complements (16 bits). When a disconnection occurs, the data equivalent to 0 V input will be used (0000 hex).

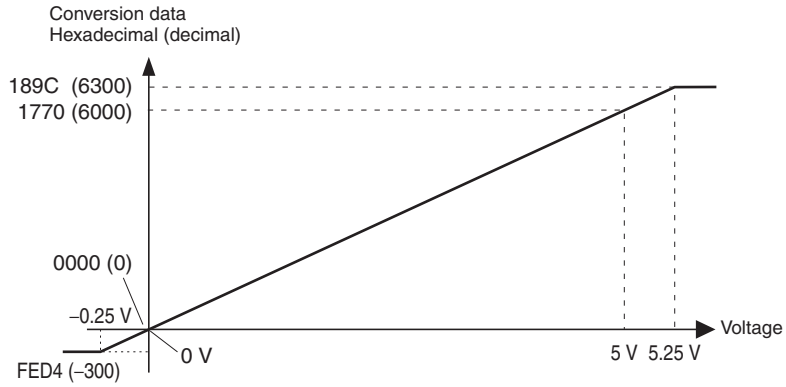

■ **Input Range:1 to 5 V**

The voltage range 1 to 5 V corresponds to 0000 to 1770 hex (0 to 6,000). The convertible data range is FED4 to 189C hex (–300 to 6,300). If the input voltage falls below the input range (input voltage less than 0.76 V), a disconnection is detected and the data is set to 7FFF hex.

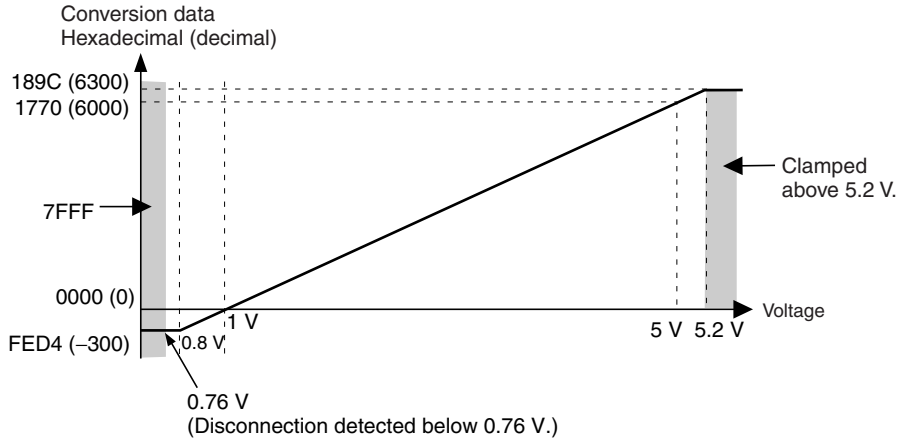

■ **Input Range: 0 to 10 V**

The voltage range 0 to 10 V corresponds to 0000 to 1770 hex (0 to 6,000). The convertible data range is FED4 to 189C hex (–300 to 6,300). Negative voltages are expressed as two's complements (16 bits). When a disconnection occurs, the data equivalent to 0 V input will be used (0000 hex).

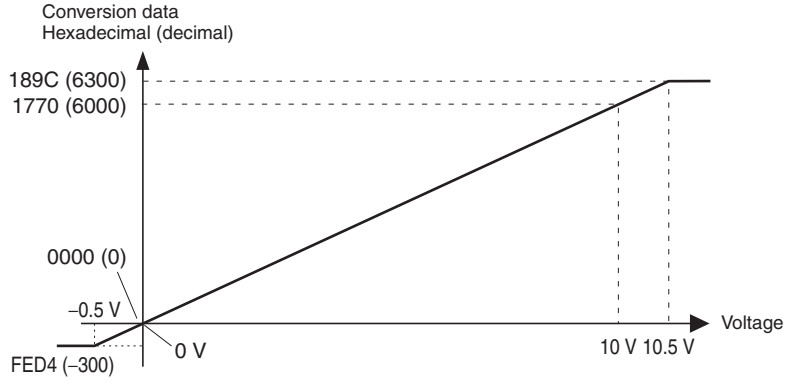

■ **Input Range: –10 to 10 V**

The voltage range –10 to 10 V corresponds to F448 to 0BB8 hex (–3,000 to 3,000). The convertible data range is F31C to 0CE4 hex (–3,300 to 3,300). Negative voltages are expressed as two's complements (16 bits). When a disconnection occurs, the data equivalent to 0 V input will be used (0000 hex).

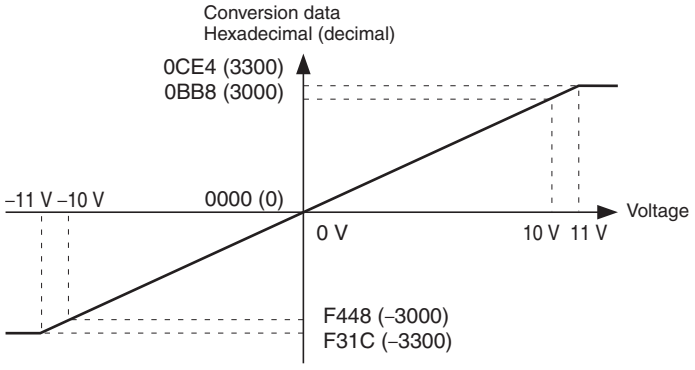

■ **Input Range: 0 to 20 mA**

The current range 0 to 20 mA corresponds to 0000 to 1770 hex (0 to 6,000). The convertible data range is FED4 to 189C hex (–300 to 6,300). Negative currents are expressed as two's complements (16 bits). When a disconnection occurs, the data equivalent to 0 mA input will be used (0000 hex).

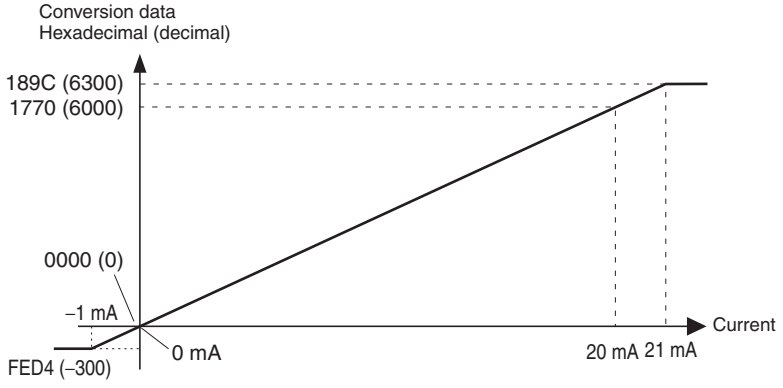

■ **Input Range: 4 to 20 mA**

The current range 4 to 20 mA corresponds to 0000 to 1770 hex (0 to 6,000). The convertible data range is FED4 to 189C hex (–300 to 6,300). If the input current is below the input range (input current less than 3.04 mA), a disconnection is detected and the data is set to 7FFF hex.

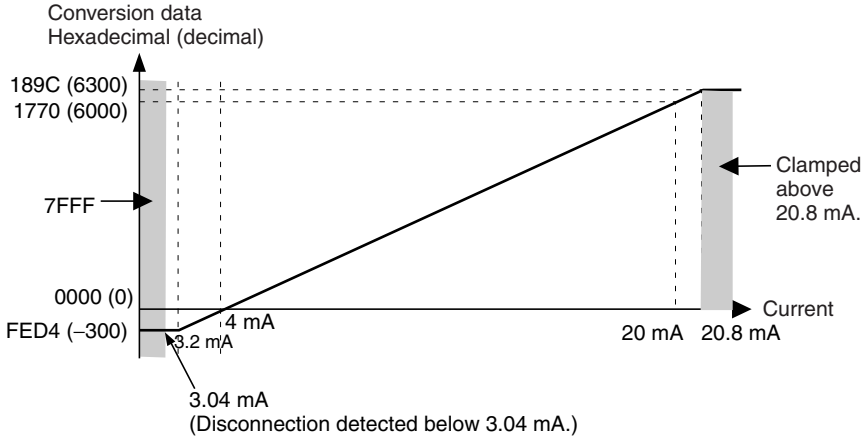

AD Conversion Data

Negative AD conversion data is expressed as two's complements. The NEG instruction (two's complement conversion) can be used to obtain the absolute value of the two's complement.

	15	14	13	12	11	10	9	8	7	6	5	4	3	2	1	0	Bit
Word +0	Input 0 AD conversion data																
Word +1	Input 1 AD conversion data																

Conversion Speed

The AD conversion data for 2 input points is refreshed every 2.42 s max., although the conversion speed will vary depending on the functions and number of AD conversion points being used. Refer to *5-4-4 Calculating the Conversion Cycle* for details.

Dimensions

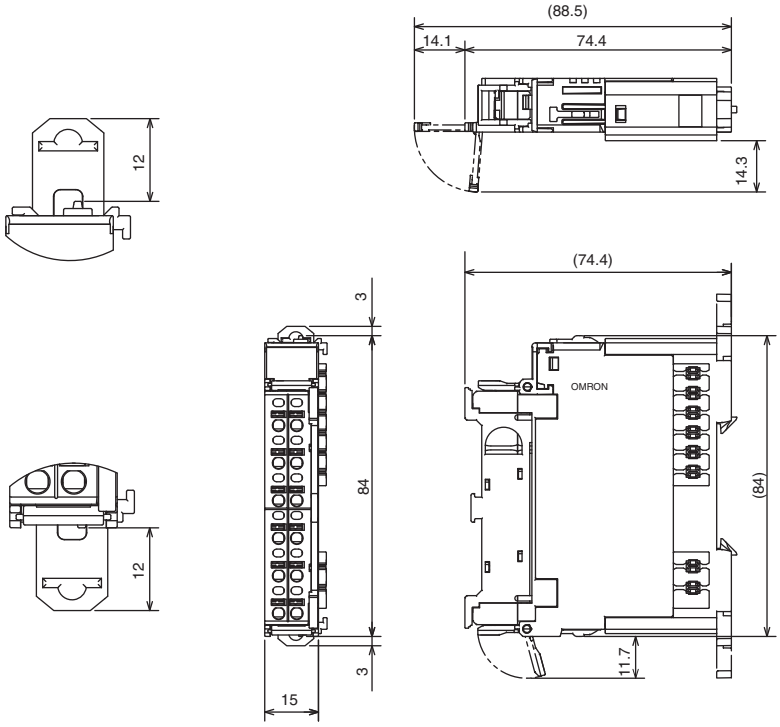

5-4-2 I/O Data Allocation Methods

Selecting I/O Data to be Allocated

Use one of the following methods to select data for allocating in the Communications Unit and then perform remote I/O communications.

1,2,3...

1. Use the default settings. Input analog values only will be allocated as I/O.
2. Use the Setting Tool to Allocate data. Aside from input analog values, data can be allocated in combination with Status Flags.

■ **When the Default Settings Are Used**

When the Analog Input Unit's default settings are used, only the analog input values are selected as I/O data and allocated in the two words (four bytes) of the Master's Input Area, as shown in the following diagram.

15	0
Analog Input Value for Input 0	
Analog Input Value for Input 1	

■ **Allocating Data (Example: DeviceNet Configurator)**

Analog data is combined with other data such as Status Flags as shown below, and allocated as I/O. By using the Setting Tool, it can be selected from a pull-down list.

Example: Allocating Analog Data + Top/Valley Detection Timing Flags

15	8	7	0
Analog Data for Input 0			
Analog Data for Input 1			
Top Detection Timing Flag		**Valley Detection Timing Flag**	

The DeviceNet Configurator can be used as described below to allocate data.

Setting Procedure (Example: DeviceNet Configurator)

1,2,3...

1. In the Network Configuration Window for the Slice I/O Terminal, double-click the icon of the Slice I/O Terminal that is to be set. Alternatively, right-click the icon and select ***Parameters - Edit***. The Edit Device Parameters Window will be displayed.
2. Click the **I/O Module** Tab.

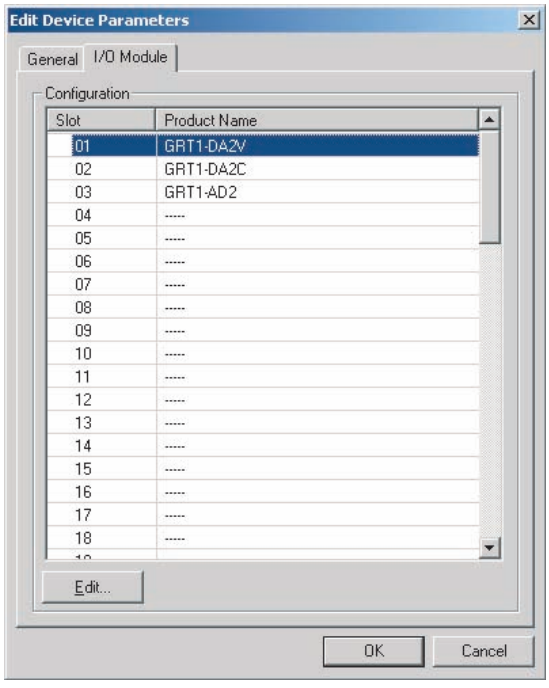

3. Click the **Edit** Button on the *I/O Module* Tab Page. The Edit Unit Parameters Window will be displayed.

4. Click the **General** Tab and select the desired I/O data from the pull-down menu on the *Default Connection Path (In)* Field. In the following example ***Analog Data*** is selected.

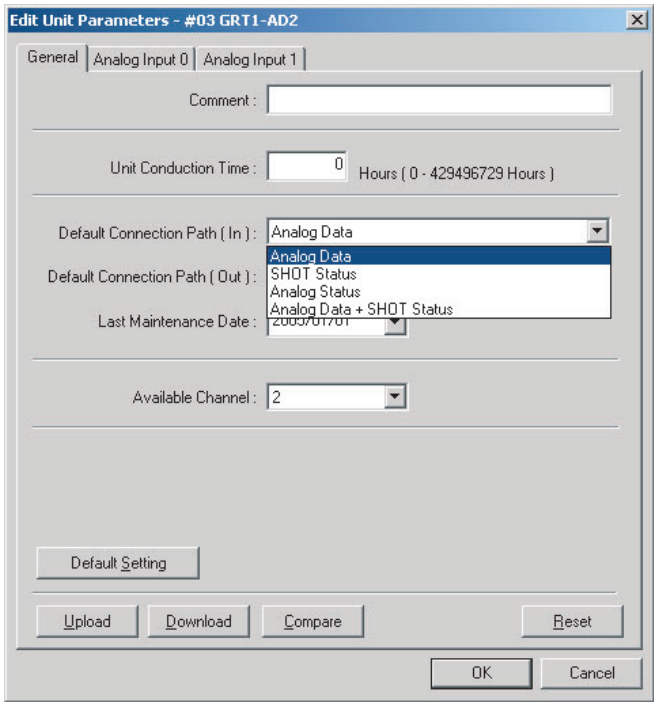

5. Return to the *General* Tab Page, click the **Download** Button, and then click the **Reset** Button to reset the Unit.
6. Click the **OK** Button to exit.

■ Selecting the Analog Data Type

The analog data type can be selected from up to six types of data (analog input value, peak value, bottom value, top value, valley value, and rate of change) obtained from math operations. The selected data can be allocated for the Master either individually or in combination with Status Flags.

Use the following method to select the analog data type.

Selecting the Analog Data (Example: DeviceNet Configurator)

1,2,3...

1. In the Network Configuration Window for the Slice I/O Terminal, double-click the icon of the Slice I/O Terminal that is to be set. Alternatively, right-click the icon and select ***Parameters - Edit***. The Edit Device Parameters Window will be displayed.
2. Click the **Edit** Button on the *I/O Module* Tab Page. The Edit Unit Parameters Window will be displayed.

3. Open the tab page for the input for which analog data is to be selected, and select from the pull-down list the type of data to be allocated to Analog Data.

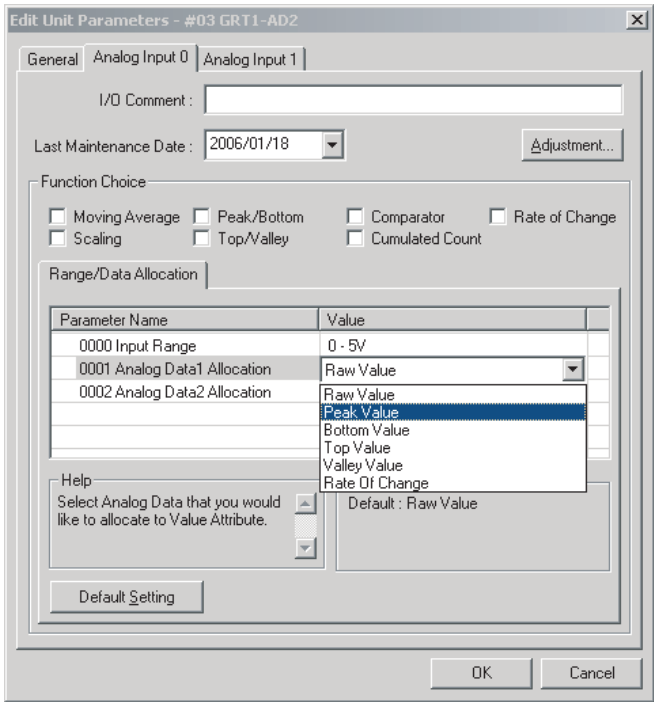

4. Return to the *General* Tab Page, click the **Download** Button and then click the **Reset** Button to reset the Unit.
5. Click the **OK** Button to exit.

I/O Data

Analog Data

Analog data is used to monitor analog values. Analog input value is allocated as the default setting, but any one of analog input value, peak value, bottom value, top value, valley value or rate of change can be selected as allocation data.

Note The comparator function can be used for the data allocated in Analog Data.

The data format used for allocating data in the Master is shown below. Data is allocated as two's complements (4 bytes = 2 words).

15	0
Analog Data for Input 0	
Analog Data for Input 1	

Top/Valley Detection Timing Flags (Shot Status)

These flags turn ON for the one-shot time when detecting the top or valley for the top/valley hold function.

These flags are used to time reading the values held as the top and valley values at the Master. The following data format is used when these flags are allocated in the Master (2 bytes/1 word).

	Bit 7	Bit 6	Bit 5	Bit 4	Bit 3	Bit 2	Bit 1	Bit 0
+0	0	0	0	0	0	0	V_ST1	V_ST0
+1	0	0	0	0	0	0	T_ST1	T_ST0

The details of each byte are shown in the following table.

Byte	Abbreviation	Name	Details
+0	V_STx	Valley Detection Timing Flag	Turns ON when a valley is detected by the valley hold function and then turns OFF after the one-shot time has elapsed.
+1	T_STx	Top Detection Timing Flag	Turns ON when a top is detected by the top hold function and then turns OFF after the one-shot time has elapsed.

Note The one-shot time can be changed. For details, refer to the one-shot time settings for the top/valley hold function.

Analog Status Flags (Analog Status)

The Analog Status Flags include allocations for the Comparator Result Flag, the Top/Valley Detection Timing Flags, and the Off-wire Detection Flags. These flags are used for detection and monitoring.

The data format used for each byte when these flags are allocated in the Master is shown below (2 bytes/1 word).

	Bit 7	Bit 6	Bit 5	Bit 4	Bit 3	Bit 2	Bit 1	Bit 0	
+0	**BW0**	**T_ST0**	**V_ST0**	**HH0**	**H0**	**PS0**	**L0**	**LL0**	**Input 0**
+1	**BW1**	**T_ST1**	**V_ST1**	**HH1**	**H1**	**PS1**	**L1**	**LL1**	**Input 1**

The details for each bit are shown in the following table.

Bit	Abbreviation	Name		Details
0	LLx	Comparator result	Low Low Limit Alarm Flag	Turns ON when the value of data allocated in Analog Data drops below the Low Low Limit alarm setting.
1	Lx		Low Limit Alarm Flag	Turns ON when the value of data allocated in Analog Data drops below the Low Limit alarm setting.
2	PSx		Normal Flag (pass signal)	Turns ON when none of the alarms (High High Limit, High Limit, Low Low Limit, and Low Limit) have been output.
3	Hx		High Limit Alarm Flag	Turns ON when the value of data allocated in Analog Data exceeds the High Limit alarm setting.
4	HHx		High High Limit Alarm Flag	Turns ON when the value of data allocated in Analog Data exceeds the High High Limit alarm setting.

Bit	Abbreviation	Name		Details
5	V_STx	Top/valley detection timing	Valley Detection Timing Flag	Used with the valley hold function. Turns ON when a valley is detected, and turns OFF after the one-shot time has lapsed.
6	T_STx		Top Detection Timing Flag	Used with the top hold function. Turns ON when a top is detected, and turns OFF after the one-shot time has lapsed.
7	BWx	Off-wire Detection Flag		Turns ON when a disconnection is detected.

Analog Data + Top/Valley Detection Timing Flags (Analog Data + Shot Status)

This data pattern consists of Analog Data followed by the Top/Valley Detection Timing Flags and is allocated in the Master using the following data format (6 bytes/3 words).

	Bit 7	Bit 6	Bit 5	Bit 4	Bit 3	Bit 2	Bit 1	Bit 0
+0	Analog Data for Input 0							
+1								
+2	Analog Data for Input 1							
+3								
+4	0	0	0	0	0	0	V_ST1	V_ST0
+5	0	0	0	0	0	0	T_ST1	T_ST0

Hold Flags (Output)

Hold Flags are used with the peak/bottom hold and top/valley hold functions. The Hold Flags are used to control the hold execution timing from the Master and are allocated in the Master using the following data format (2 bytes).

Note A delay may occur between when the Master's power is turned ON until notification of the Hold Flag status is sent to the Unit.

	Bit 7	Bit 6	Bit 5	Bit 4	Bit 3	Bit 2	Bit 1	Bit 0
+0							HD1	HD0
+1								

The details for each bit are shown in the following table.

Bit	Abbreviation	Name	Details
0	HD0	Hold Flag for Input 0	The hold function is performed for Analog Input 0 while this flag is ON. The hold function stops and the last value is held when the flag goes OFF.
1	HD1	Hold Flag for Input 1	The hold function is performed for Analog Input 1 while this flag is ON. The hold function stops and the last value is held when the flag goes OFF.

5-4-3 Functions and Settings

Setting the Number of AD Conversion Points

Normally, when using a two-point Input Unit, the values for the two inputs are converted in sequence. The setting can be changed, however, so that unused inputs are not converted. By reducing the number of conversion points, the

conversion cycle speed is increased. For details on conversion cycle time, refer to *5-4-4 Calculating the Conversion Cycle.*

Conversion points	Details
2 points (default)	Converting Inputs 0 to 1. 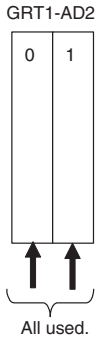
1 point	Converting Input 0. 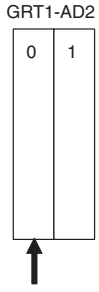

Note Two words are always used for the I/O data for analog input values regardless of the analog word setting.

Setting Procedure (Example: DeviceNet Configurator)

1,2,3... 1. In the Network Configuration Window for the Slice I/O Terminal, double-click the icon of the Analog Input Unit that is to be set. Alternatively, right-click the icon and select ***Parameters - Edit***. The Edit Device Parameters Window will be displayed.

2. Click the **I/O Module** Tab.

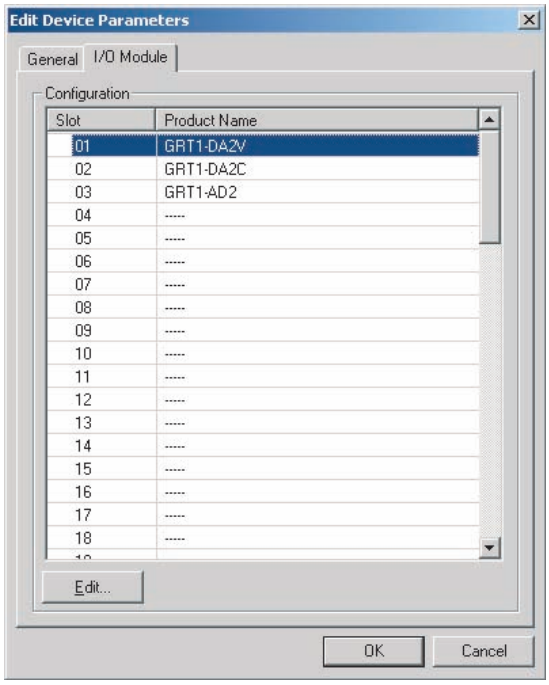

3. Click the **Edit** Button on the *I/O Module* Tab Page. The Edit Unit Parameters Window will be displayed.
4. Click the **General** Tab and select the number of conversion points from the pull-down menu in the *Available Channel* Field.

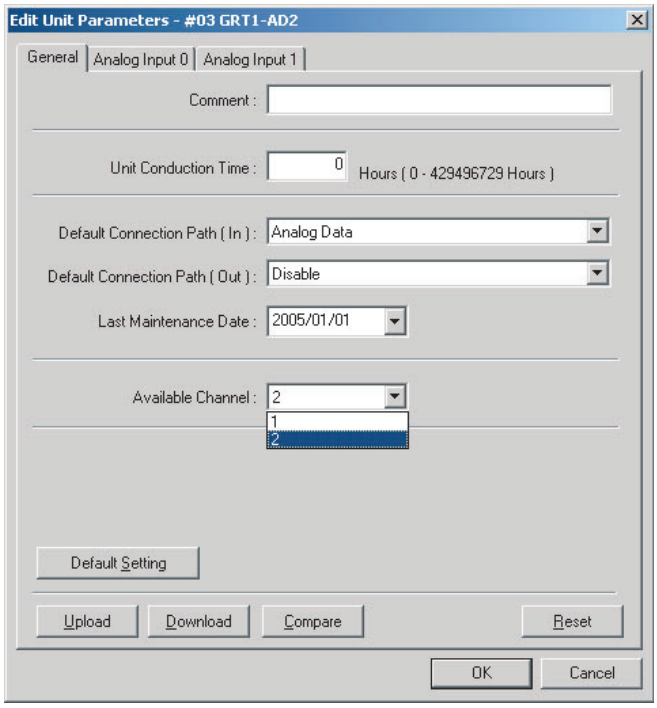

5. Click the **Download** Button, and then click the **Reset** Button to reset the Unit.
6. Click the **OK** Button to exit.

Moving Average Processing

This function calculates the average value (moving average) of the previous eight inputs, and uses the resulting value as conversion data. When the input value fluctuates frequently, averaging can be used to produce a stable input value, as shown in the following diagram.

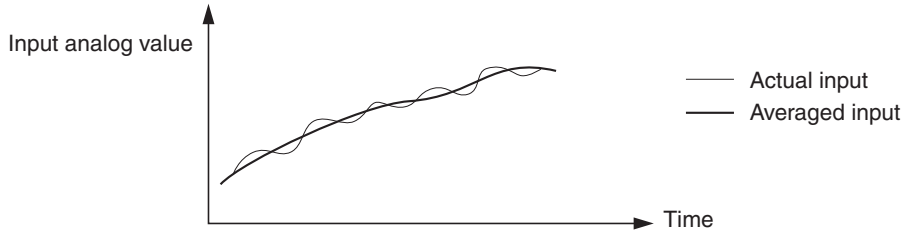

Setting Procedure (Example: DeviceNet Configurator)

1,2,3...

1. In the Network Configuration Window for the Slice I/O Terminal, double-click the icon of the Analog Input Unit that is to be set. Alternatively, right-click the icon and select ***Parameters - Edit***. The Edit Device Parameters Window will be displayed.
2. Click the **I/O Module** Tab.
3. Click the **Edit** Button on the *I/O Module* Tab Page. The Edit Unit Parameters Window will be displayed.
4. Select the tab page for the input where moving average processing is to be performed, and select the *Moving Average* Check Box in the *Function Choice* Area.

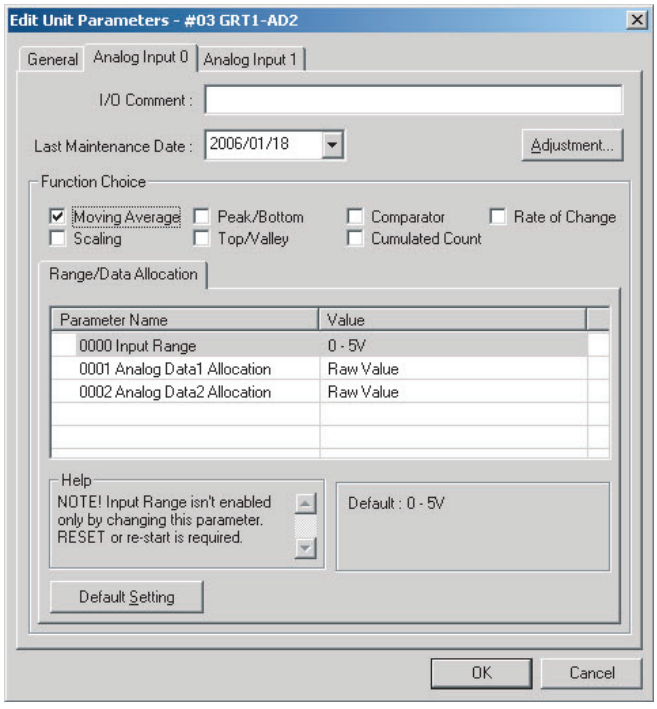

5. Return to the *General* Tab Page, click the **Download** Button, and then click the **Reset** Button to reset the Unit.
6. Click the **OK** Button to exit.

Scaling

The default setting is used to perform AD conversion of analog input values, scaling them to a count between 0 and 6,000. Scaling can be used to change scaled values that correspond to the input signal range into other values required by the user (industry unit values). Scaling also eliminates the need

for ladder programming in the Master to perform math operations. The following two methods of input scaling can be used.

Default Scaling

Analog input values (count values) are converted to the original voltage and current values. The units used are mV or µA. When default scaling is selected, scaling is performed according to the range used, as shown in the following table.

Input range	0 to 5 V	0 to 10 V	1 to 5 V	–10 to 10 V (AD04 only)	0 to 20 mA	4 to 20 mA
100%	5,000 mV	10,000 mV	5,000 mV	10,000 mV	20,000 µA	20,000 µA
0%	0000 mV	0000 mV	1,000 mV	–10,000 mV	0000 µA	4,000 µA
Off-wire	---	---	7FFF hex	---	---	7FFF hex

User Scaling

Analog input values (count values) are scaled to user-defined values. The conversion values for 100% and 0% are set using the Setting Tool.

Input range	0 to 5 V	0 to 10 V	1 to 5 V	–10 to 10 V (AD04 only)	0 to 20 mA	4 to 20 mA
100%	Set using Setting Tool (–28,000 to 28,000)					
0%	Set using Setting Tool (–28,000 to 28,000)					
Off-wire	---	---	7FFF hex	---	---	7FFF hex

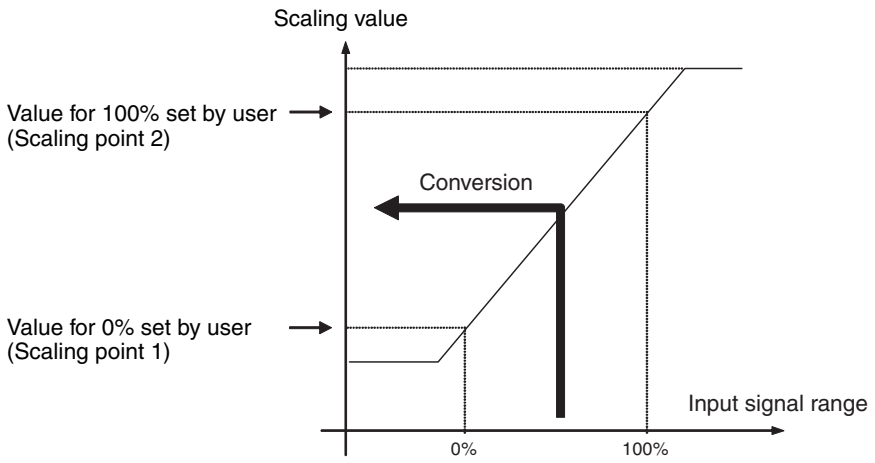

Note Reverse scaling, where the 0% scaling value is higher than the 100% scaling value, is also supported.

Offset Compensation

Scaling analog input values of Linear Sensors to distances produces mounting error in the Sensor. Offset compensation compensates for error that occurs during scaling. The offset amount is added to the scaled line before processing, as shown in the following diagram. The offset (error) value can be input between –28,000 to 28,000, but make sure that underflow or overflow does not occur. The High Limit is 7FFE hex and the Low Limit is 8000 hex.

Note The offset value can be set even when using default scaling.

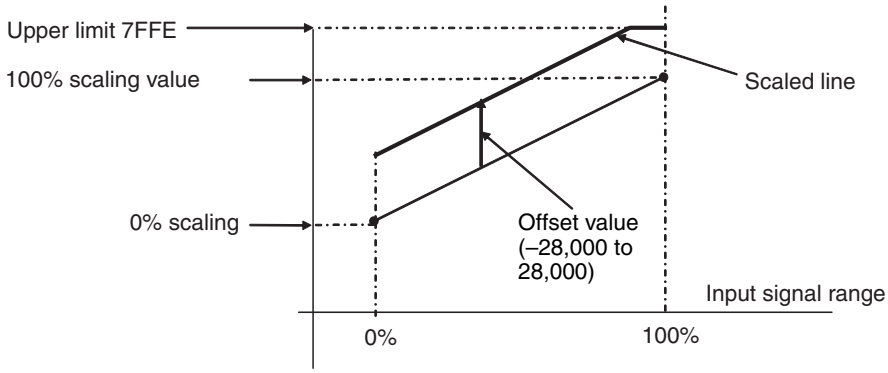

Setting Procedure (Example: DeviceNet Configurator)

1,2,3...

1. In the Network Configuration Window for the Slice I/O Terminal, double-click the icon of the Analog Input Unit that is to be set. Alternatively, right-click the icon and select ***Parameters - Edit***. The Edit Device Parameters Window will be displayed.
2. Click the **I/O Module** Tab.
3. Click the **Edit** Button on the *I/O Module* Tab Page. The Edit Unit Parameters Window will be displayed.
4. Select the tab page for the input where scaling is to be performed, and select the *Scaling* Check Box in the *Function Choice* Area.

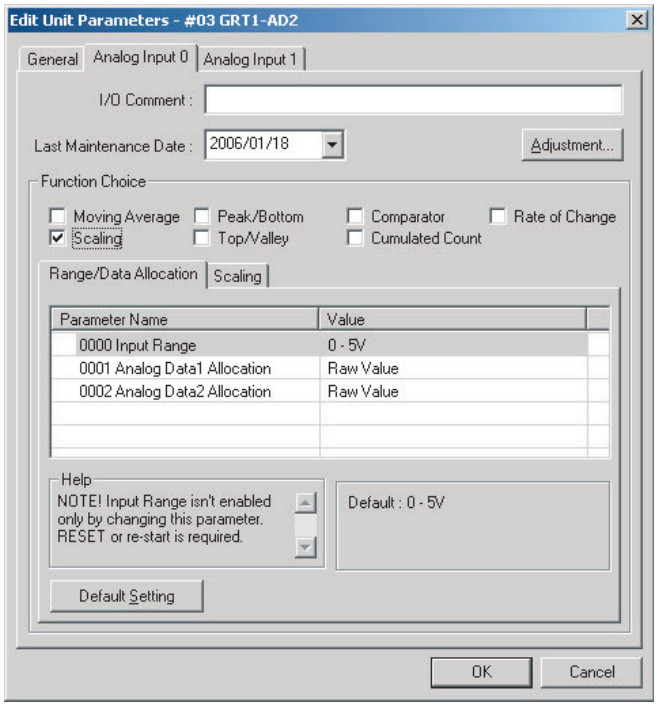

5. Click the **Scaling** Tab, and select either ***Default Scaling*** *or* ***User Scaling***. The following example shows when *Default Scaling* is selected.

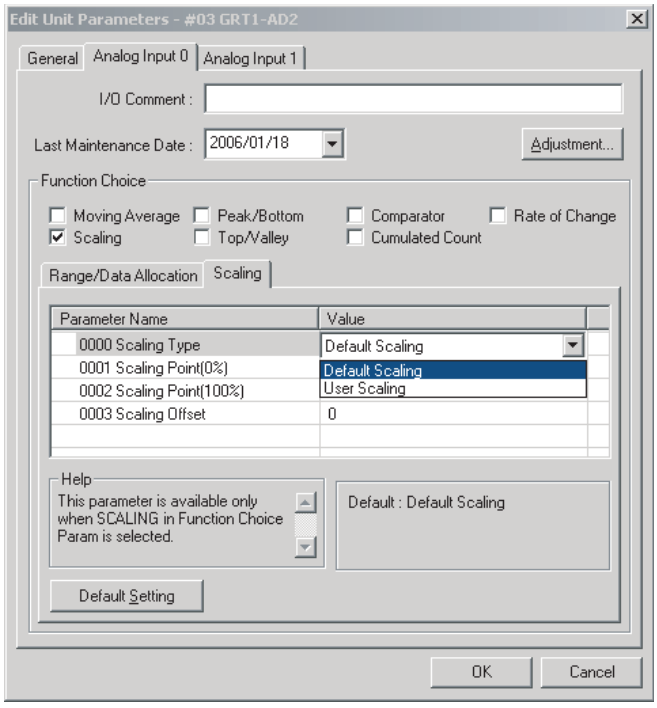

6. For user scaling, set the 0% value in the *Scaling point 1* Field, and set the 100% value in the *Scaling point 2* Field.

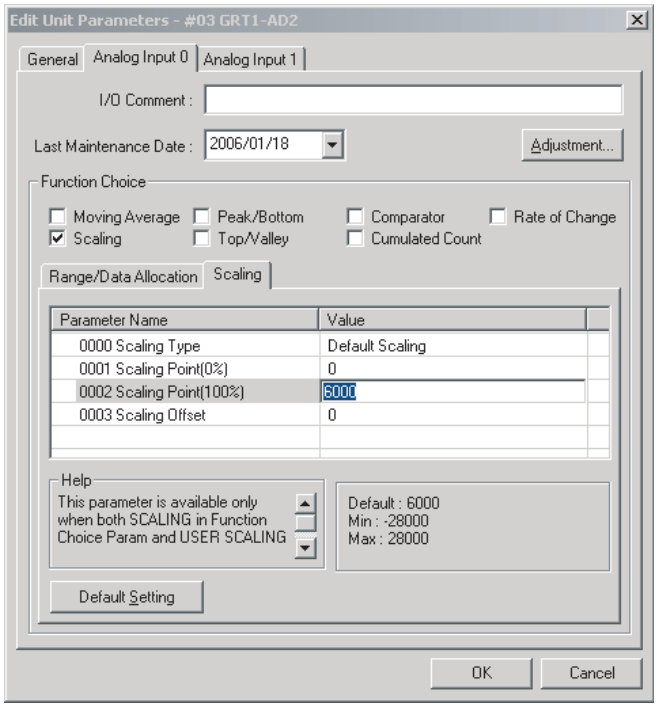

7. For offset compensation, set the offset value in the *Scaling Offset* Field. Also select either ***Default Scaling*** or ***User Scaling*** in the *Scaling Type* Field.

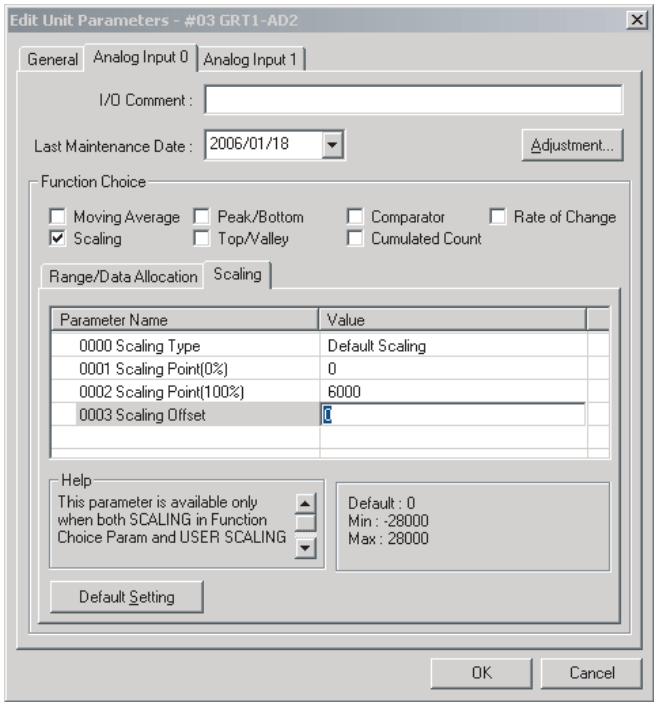

8. Return to the *General* Tab Page, click the **Download** Button, and then click the **Reset** Button to reset the Unit.
9. Click the **OK** Button to exit.

Peak/Bottom Hold

Peak/bottom hold is used to hold the maximum (peak) value or minimum (bottom) value of the analog input value. When the Hold Flag (output) allocated in the Output Area turns ON, the hold function starts, searching for the peak or bottom value until the Hold Flag turns OFF. (The peak/bottom value is refreshed when the Hold Flag turns OFF.) The comparator function can be used to compare the peak or bottom values allocated as analog data. (Refer to details on the comparator function.)

■ Example of Bottom Hold

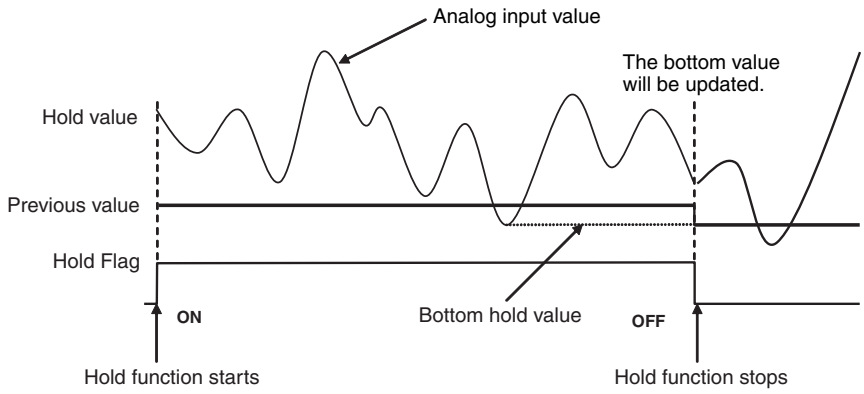

Note A delay in network transmission time will occur from the time the Hold Flag turns ON (or OFF) in the Master's ladder program until notification of the flag's status is actually sent to the Unit. Therefore, even when the Hold Flag is ON, the first analog data transmitted to the Master when the CPU Unit power is

turned ON may be the data from when the Hold Flag was OFF. To collect peak/bottom hold data using the Hold Flag at the Master, configure a ladder program that considers the transmission delay when the Hold Flag is turned ON, then enables the peak/bottom hold values after a fixed time interval.

Setting Procedure (Example: DeviceNet Configurator)

1,2,3...

1. In the Network Configuration Window for the Slice I/O Terminal, double-click the icon of the Slice I/O Terminal that is to be set. Alternatively, right-click the icon and select ***Parameters - Edit***. The Edit Device Parameters Window will be displayed.
2. Click the **I/O Module** Tab.
3. Click the **Edit** Button on the *I/O Module* Tab Page. The Edit Unit Parameters Window will be displayed.
4. Select the tab page for the input where peak/bottom hold is to be set, and select the *Peak/Bottom Hold* Check Box in the *Function Choice* Area.

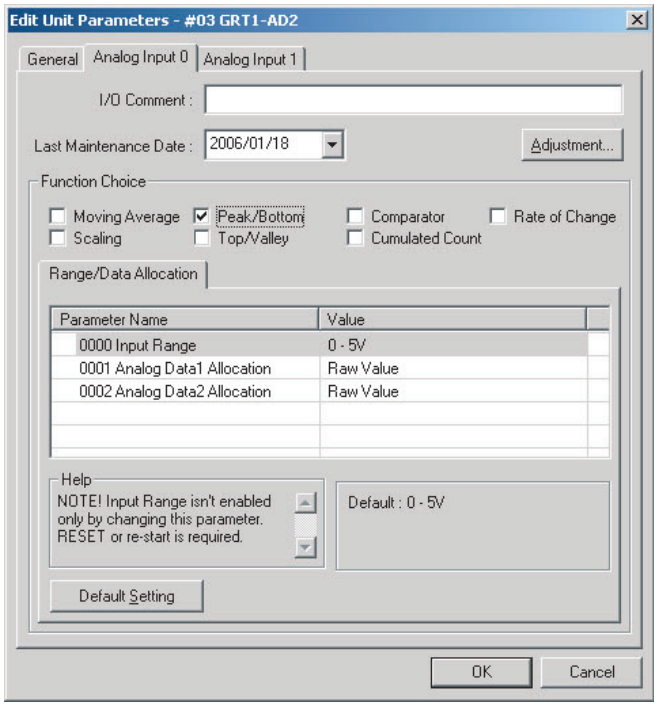

5. To allocate the Hold Flags (output) in the default connection path, click the **General** Tab and select ***Holding Value*** from the pull-down menu in the *Default Connection Path (Out)* Field.

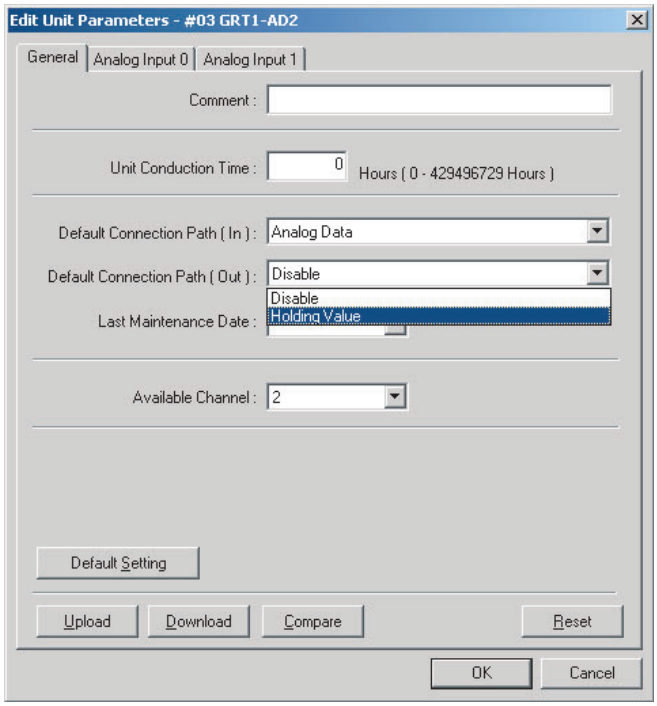

6. Click the **Download** Button and then click the **Reset** Button to reset the Unit.
7. Click the **OK** Button to exit.

Top/Valley Hold

Top/valley hold is used to hold the top and valley values of the analog input value.

Analog values that fluctuate more than twice the hysteresis value are monitored, and the top or valley values are held. The top or valley value is allocated along with the Top/Valley Detection Timing Flags, which can be used to check the hold timing.

When the Hold Flag (output) allocated in the Output Area turns ON, the hold function starts, refreshing the top or valley value until the Hold Flag turns OFF. (The last value is held when the Hold Flag turns OFF, but the next time the Hold Flag turns ON, the hold value is initialized as soon as a top or valley occurs.) The comparator can be used to compare the top or valley value allocated as analog data. (Refer to details on the comparator function.)

■ **Example of Valley Hold**

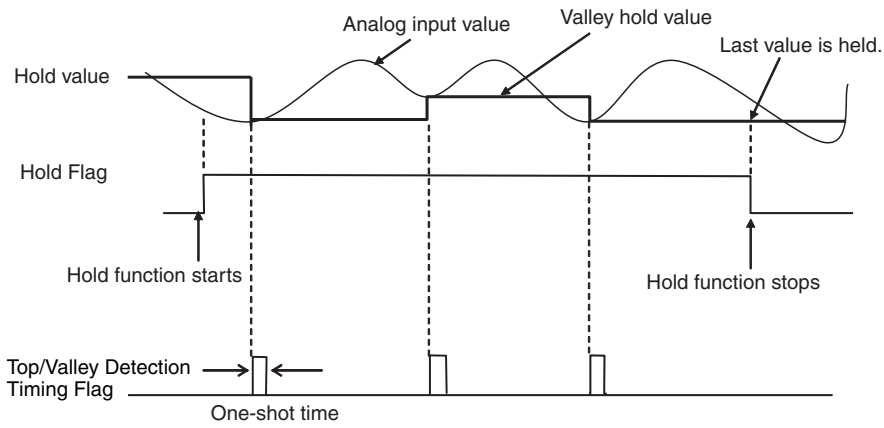

Note

1. A delay in network transmission time will occur from the time the Hold Flag turns ON (or OFF) in the Master's ladder program until notification of the flag's status is actually sent to the Unit. Therefore, even when the Hold Flag is ON, the first analog data transmitted to the Master when the CPU Unit power is turned ON may be the data from when the Hold Flag was OFF. To collect top/valley hold data using the Hold Flag at the Master, configure a ladder program which considers the transmission delay time when the Hold Flag is turned ON, then enables the top/valley hold values after a fixed time interval.
2. The time that the Top/Valley Detection Timing Flags are ON can be adjusted by setting the one-shot time. Use the Setting Tool to set the one-shot time (the setting range is 1 to 65535 ms).
3. If the Hold Flag turns OFF during the time the Top/Valley Detection Timing Flag is set to be ON, both flags will turn OFF simultaneously.

Setting Procedure (Example: DeviceNet Configurator)

1,2,3...

1. In the Network Configuration Window for the Slice I/O Terminal, double-click the icon of the Slice I/O Terminal that is to be set. Alternatively, right-click the icon and select ***Parameters - Edit***. The Edit Device Parameters Window will be displayed.
2. Click the **I/O Module** Tab.
3. Click the **Edit** Button on the *I/O Module* Tab Page. The Edit Unit Parameters Window will be displayed.

4. Select the tab page for the input where top/valley hold is to be set, and select the *Top/Valley Hold* Check Box in the *Function Choice* Area.

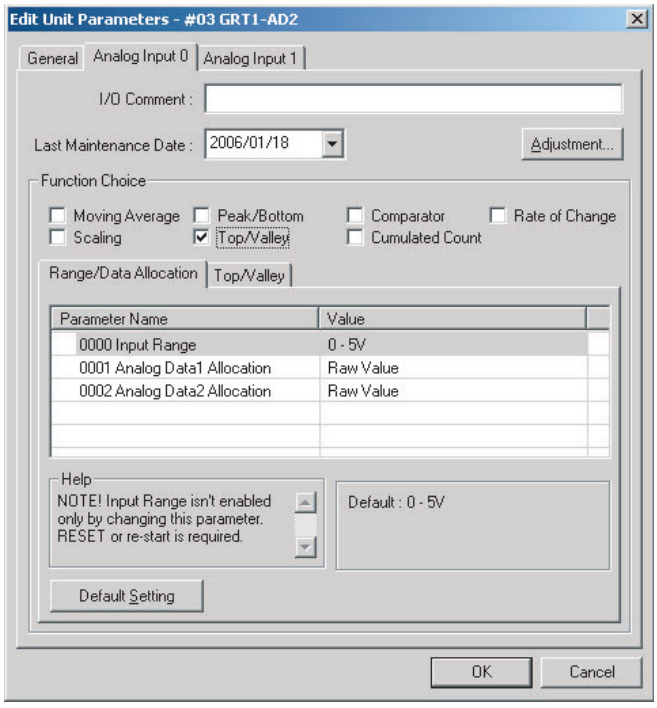

5. To allocate the Hold Flag (output) in the default connection path, click the **General** Tab, and select ***Holding Value*** from the pull-down menu in the *Default Connection Path (Out)* Field.

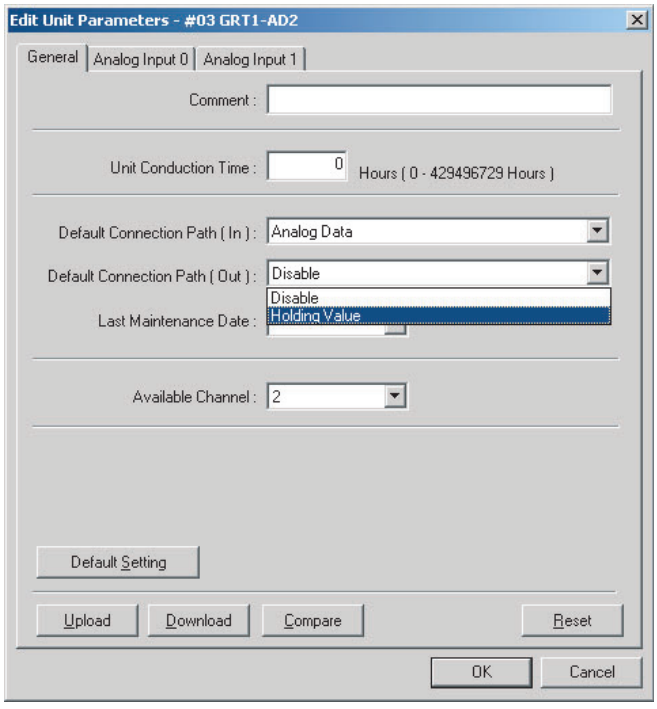

6. Click the **Download** Button, and then click the **Reset** Button to reset the Unit.
7. Click the **OK** Button to exit.

Hysteresis Setting

The hysteresis value can be set using the Setting Tool to prevent detection of top or valley values that occur due to minor fluctuations in the analog input

value. This will cause the start of data holding to be delayed after the actual top or valley value occurs, as shown in the following diagram.

■ **Timing for Setting Data**

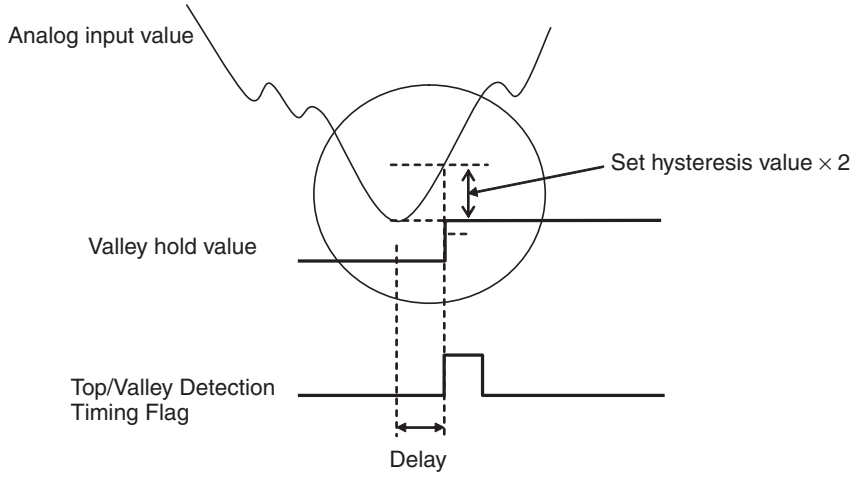

■ **Setting Hysteresis (Example: DeviceNet Configurator)**

1,2,3... 1. Input the value for hysteresis in the *Hysteresis* Field in the **Top/Valley** Tab in the *Function Choice* Area.

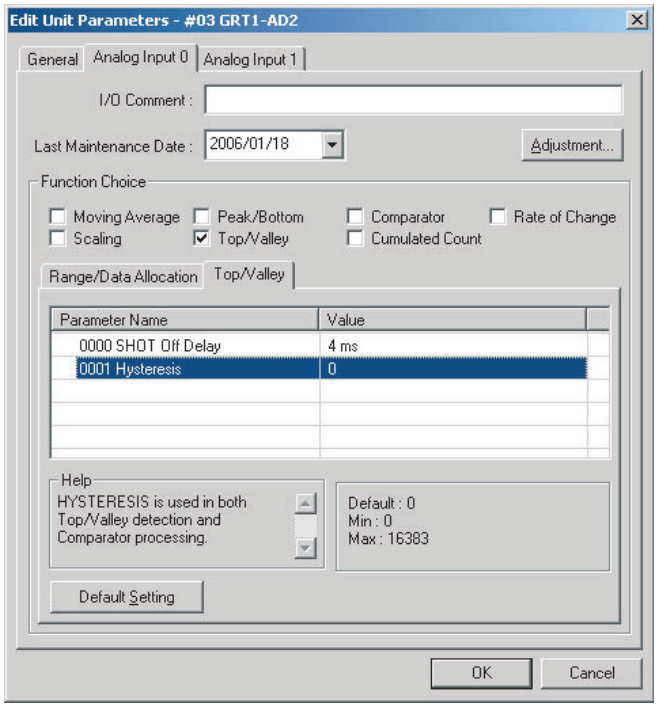

2. Return to the *General* Tab Page, click the **Download** Button, and then click the **Reset** Button to reset the Unit.
3. Click the **OK** Button to exit.

Note The hysteresis value set for the top/valley hold function is also used by the comparator function.

One-shot Time Setting

1,2,3...

1. Input the desired value in the *SHOT Off Delay* Field on the *Top/Valley* Tab Page in the *Function Choice* Area.

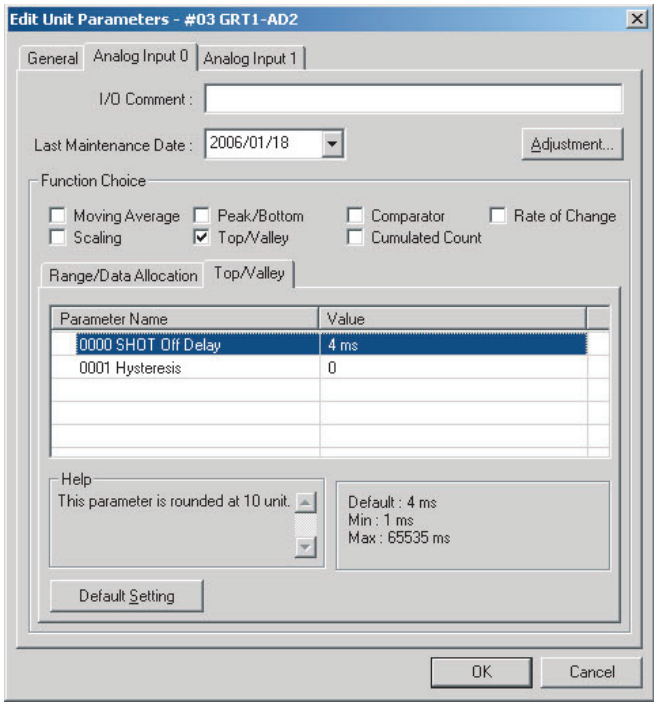

2. Return to the *General* Tab Page, click the **Download** Button, and then click the **Reset** Button to reset the Unit.
3. Click the **OK** Button to exit.

Rate of Change Calculation

The rate of change can be obtained for each sampling cycle set for the analog input data. This function calculates the difference between each set sampling cycle and value obtained in the previous cycle. The default setting for the sampling cycle is 100 ms and the sampling cycle setting range depends on the model, as shown in the following table.

Model	Sampling cycle setting range
GRT1-AD2	10 to 65,530 ms (Set in 10-ms units.)

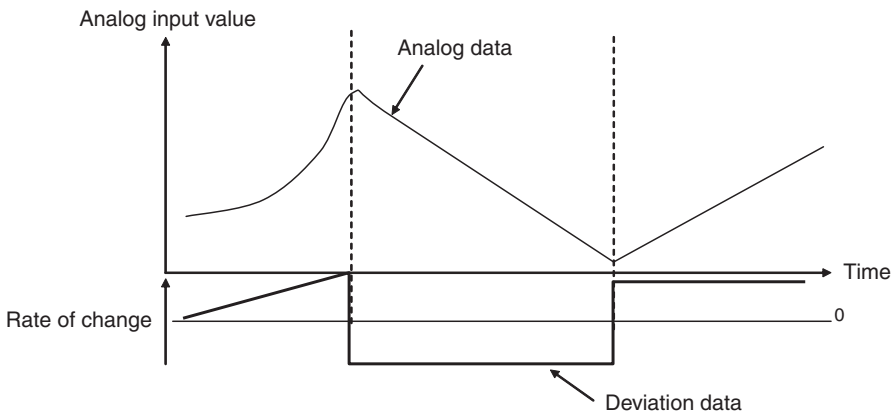

Note If the sampling cycle is set to a small value, the rate of change will be sensitive to small changes. If the analog data is subject to minute fluctuations, and the sampling cycle is shorter than the cycle of fluctuation, the fluctuation will

be regarded as the rate of change. To prevent this occurring, use moving average processing, which will set a longer sampling cycle.

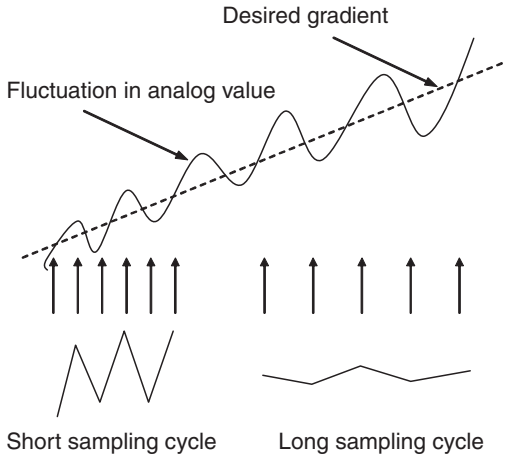

Setting Procedure (Example: DeviceNet Configurator)

1,2,3...

1. In the Network Configuration Window for the Slice I/O Terminal, double-click the icon of the Slice I/O Terminal that is to be set. Alternatively, right-click the icon and select ***Parameters - Edit***. The Edit Device Parameters Window will be displayed.
2. Click the **I/O Module** Tab.
3. Click the **Edit** Button on the *I/O Module* Tab Page. The Edit Unit Parameters Window will be displayed.
4. Select the tab page for the input where rate of change is to be set, and select the *Rate of Change* Check Box in the *Function Choice* Area.

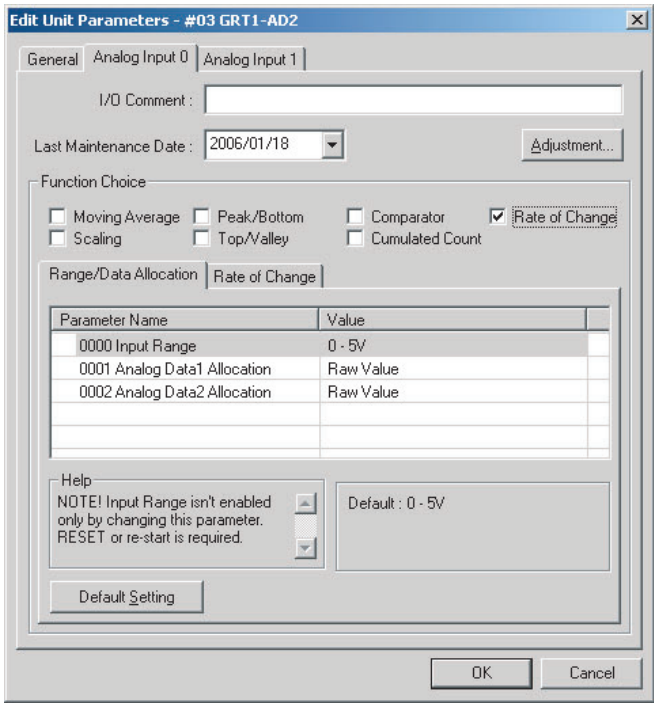

5. To set the sampling cycle, click the **Rate of Change** Tab and input the desired value for the sampling cycle in the *Sampling Rate* Field.

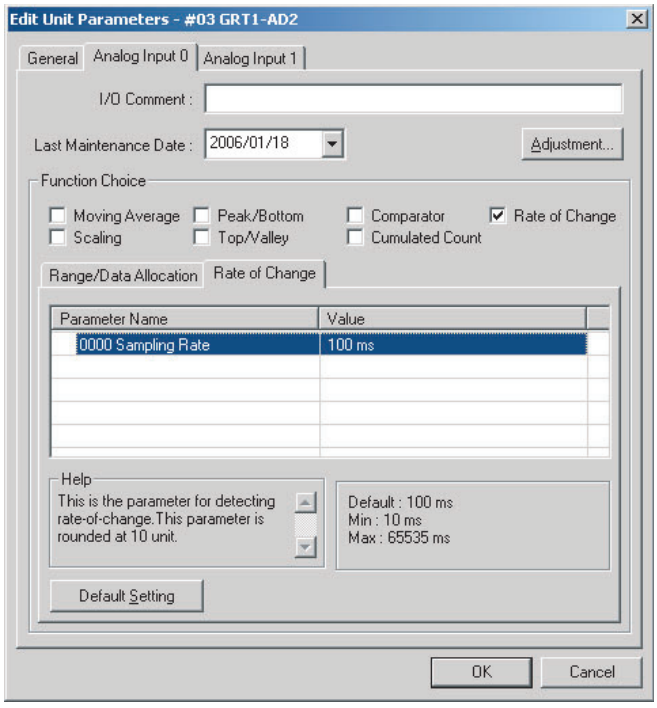

6. Return to the *General* Tab Page, click the **Download** Button, and then click the **Reset** Button to reset the Unit.
7. Click the **OK** Button to exit.

Comparator

When the High High Limit, High Limit, Low Low Limit, and Low Limit are set in the Unit, a flag will turn ON when a value exceeds the setting range. The four set values are High High Limit (HH), High Limit (H), Low Low Limit (LL), and Low Limit (L), and the values can be compared with those in Analog Data. When any of these values is exceeded, the Comparator Result Flag in the area for Analog Status Flags turns ON. If an alarm does not occur, the Normal Flag (pass signal) turns ON.

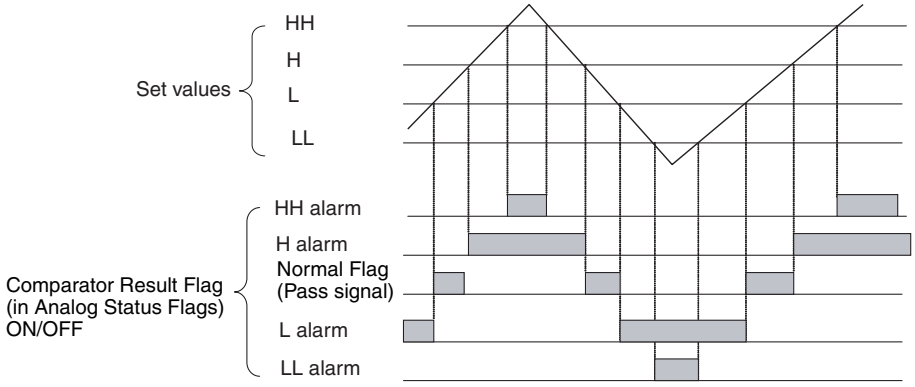

Note When the analog input value changes faster than the conversion cycle, the High Limit alarm may turn ON without the Normal Flag (pass signal) turning ON for the Low Limit alarm. Configure ladder programs to prevent this occurring.

Setting Hysteresis

The Comparator Result Flag turns OFF when the value is lower than the hysteresis width (H or HH alarm occurs) or exceeds it (L or LL alarm occurs), as shown in the following diagram. If the analog value fluctuates around the threshold, and the flag repeatedly turns ON or OFF, setting hysteresis will stabilize the flag operation.

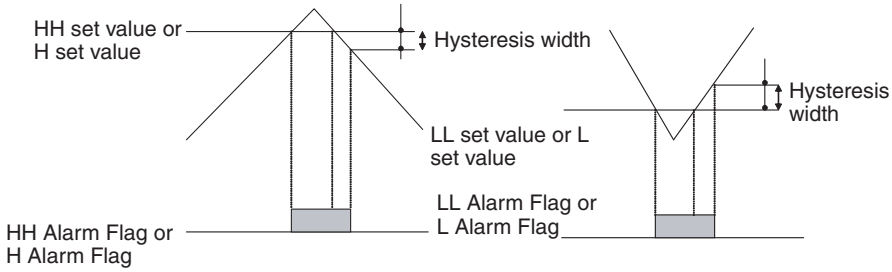

OFF Delay

The time until the Comparator Result Flag turns OFF can be extended. For example, even if the Flag is ON momentarily, the OFF delay can be set so that the Master can receive notification of the Flag's status.

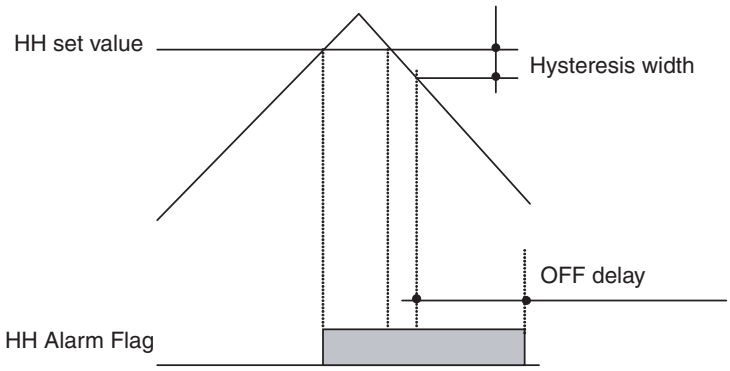

Setting Procedure (Example: DeviceNet Configurator)

1,2,3...

1. In the Network Configuration Window for the Slice I/O Terminal, double-click the icon of the Slice I/O Terminal that is to be set. Alternatively, right-click the icon and select ***Parameters - Edit***. The Edit Device Parameters Window will be displayed.
2. Click the **I/O Module** Tab.
3. Click the **Edit** Button on the *I/O Module* Tab Page. The Edit Unit Parameters Window will be displayed.

4. Select the tab page for the input where the comparator function is to be set, and select the *Comparator* Check Box in the *Function Choice* Area.

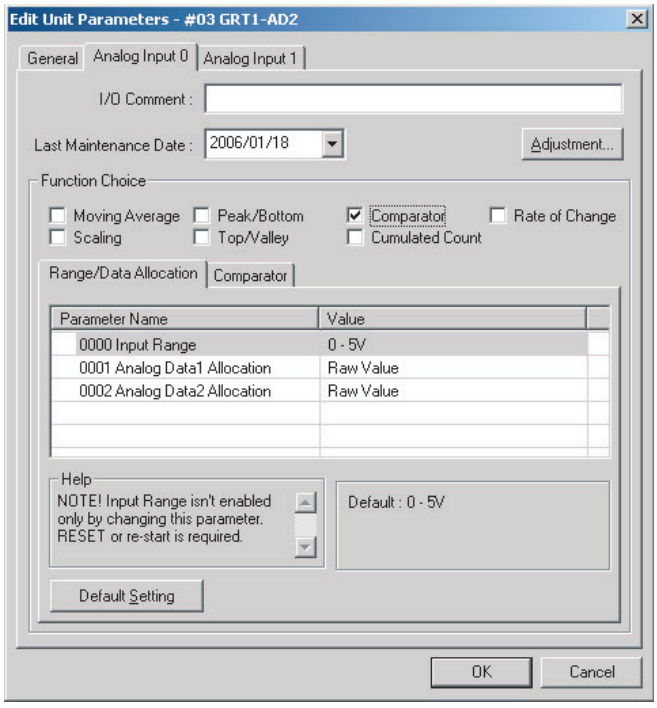

5. Click the **Comparator** Tab and set each of the alarm values. The example here shows the setting for *Alarm Trip Point High (HH)*.

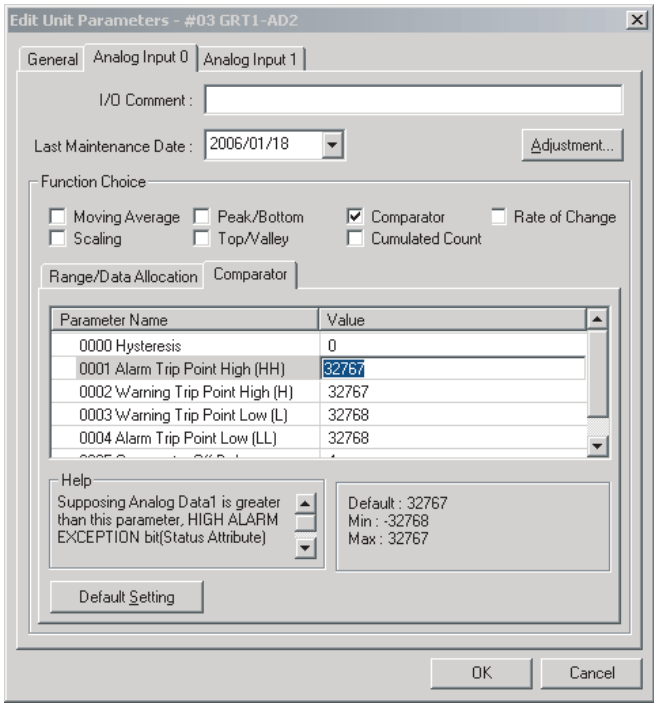

6. To set the hysteresis value, input the desired value in the *Hysteresis* Field.

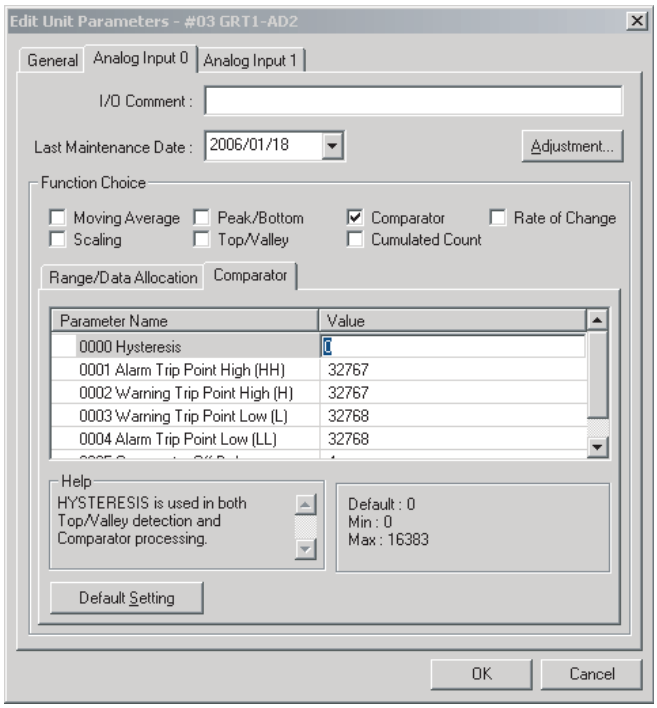

Note The hysteresis value set for the comparator function is also used by the top/valley hold function.

7. To set the OFF delay function, input the desired value in the *Comparator Off Delay* Field.

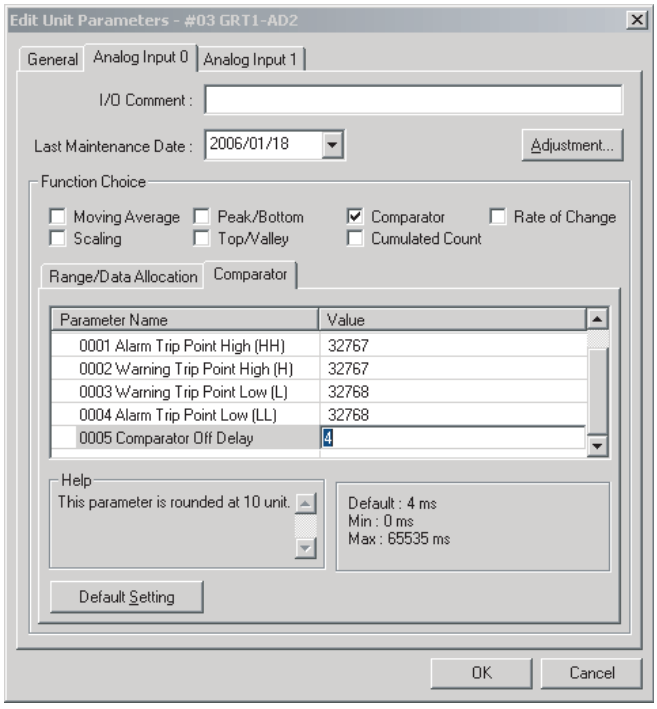

8. Return to the *General* Tab Page, click the **Download** Button, and then click the **Reset** Button to reset the Unit.
9. Click the **OK** Button to exit.

Off-wire Detection

When a disconnection occurs in an analog input line (voltage input or current input), the Off-wire Detection Flag turns ON for each input that is enabled in the number of AD conversion points. The Off-wire Detection Flags are included in the Analog Status Flags.

When Off-wire Detection is enabled, the value of AD conversion data is set to 7FFF hex. When the input returns to a value within the range that can be converted, the Off-wire Detection function will automatically be turned OFF, and normal data conversion will occur.

Off-wire Detection functions with input ranges of 1 to 5 V or 4 to 20 mA only. With the 1 to 5 V input range, an off-wire condition is detected when the input voltage is below 0.76 V (less than 6%). With the 4 to 20 mA input range, an off-wire condition is detected when the input current is below 3.04 mA.

User Adjustment

Depending on factors such as the characteristics and connection methods of the input device, the input can be adjusted to compensate for error in the input voltage or current. The following diagram shows when compensation is applied to the conversion line at the two points for 0% and 100%.

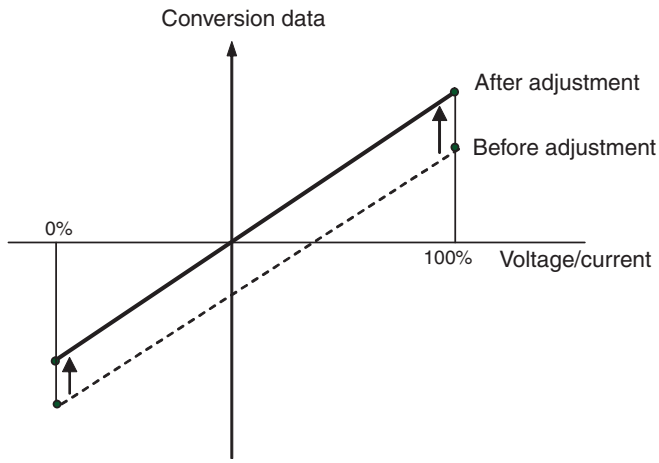

The following table shows the input ranges that support user adjustment.

Input range	Low Limit	High Limit
0 to 5 V	–0.25 to 0.25 V	4.75 to 5.25 V
1 to 5 V	0.8 to 1.2 V	4.8 to 5.2 V
0 to 10 V	–0.5 to 0.5 V	9.5 to 10.5 V
–10 to 10 V	–11 to –9.0 V	9.0 to 11 V
4 to 20 mA	3.2 to 4.8 mA	19.2 to 20.8 mA
0 to 20 mA	–1.0 to 1.0 mA	19 to 21 mA

Setting Procedure (Example: DeviceNet Configurator)

1,2,3...

1. In the Network Configuration Window for the Slice I/O Terminal, double-click the icon of the Slice I/O Terminal that is to be set. Alternatively, right-click the icon and select ***Parameters - Edit***. The Edit Device Parameters Window will be displayed.
2. Click the **I/O Module** Tab.
3. Click the **Edit** Button on the *I/O Module* Tab Page. The Edit Unit Parameters Window will be displayed.

4. Select the tab page for the input to be adjusted, and click the **Adjustment** Button. (At the same time set the input range again.)

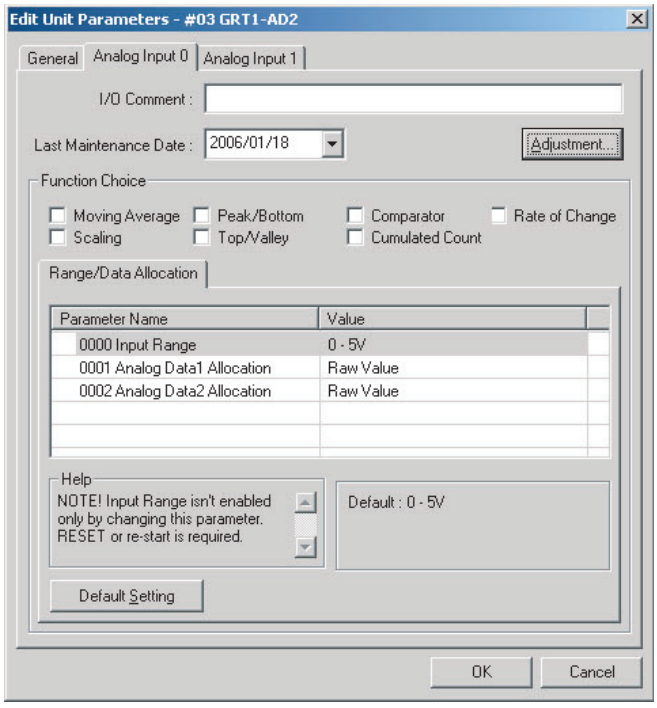

5. Input the voltage (or current) transmitted from the connected device to the Unit's input terminal that is equivalent to the 100% value.
6. Click the **Fix upper adjusting Value** Button, and input the adjusted value.

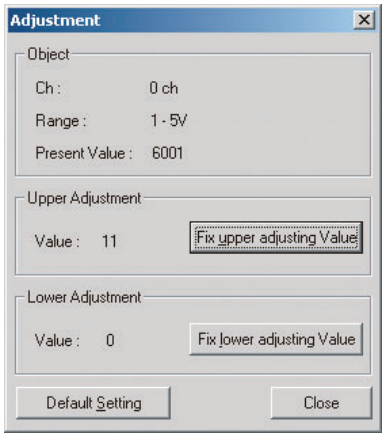

7. Input the voltage (or current) transmitted from the connected device to the Unit's input terminal that is equivalent to the 0% value.

8. Click the **Fix lower adjusting Value** Button, and input the adjusted value.

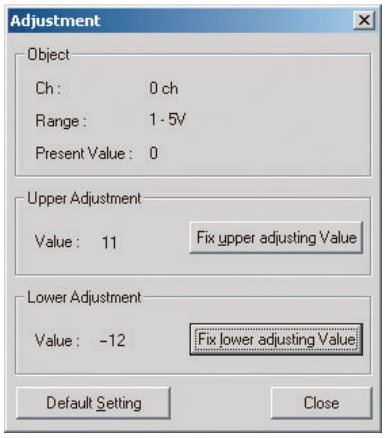

9. To return an adjusted value to the default setting, click the **Default Setting** Button.
10. Close the Adjustment Window, return to the *General* Tab Page, click the **Download** Button, and then click the **Reset** Button to reset the Unit.
11. Click the **OK** Button to exit.

Cumulative Counter

The cumulative counter calculates an approximation to the integral of analog input values over time. The cumulated value can be calculated in “count hours” (by selecting “hours”) or “count minutes” (by selecting “minutes”). The count value is the analog input value in the industry unit obtained after scaling. For example, 100.0 count hours indicates a value equivalent to an analog input value of 100 counts continuing for one hour. The counter range for a four-byte area (two words) for count hours or count minutes is –214,748,364.8 to 214,748,364.7. Data is displayed on the Setting Tool in units of 0.1 hour or minute.

Monitor values can also be set in the Unit. When the cumulated count value exceeds the set monitor value, the Cumulative Counter Flag in the area for Generic Status Flags turns ON.

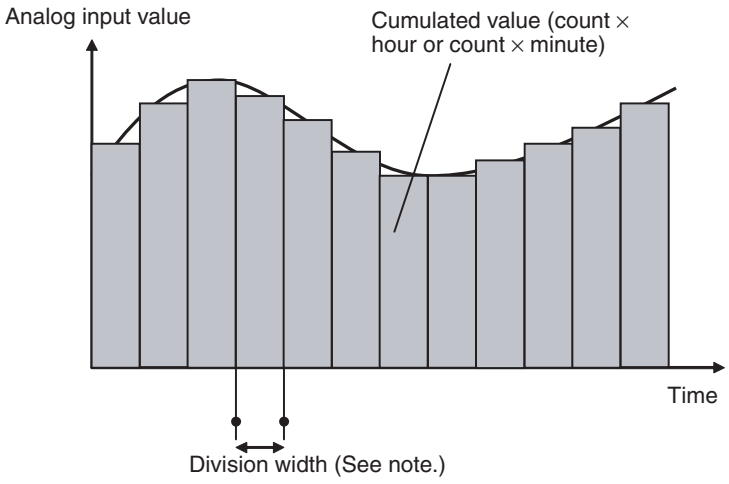

Note The following table shows the divisions for the cumulative counter.

DRT2-AD2

Unit	Divisions
Hour	3.6 s (1/1,000 hour)
Minute	60 ms (1/1,000 minute)

Setting Procedure (Example: DeviceNet Configurator)

1,2,3...

1. In the Network Configuration Window for the Slice I/O Terminal, double-click the icon of the Slice I/O Terminal that is to be set. Alternatively, right-click the icon and select ***Parameters - Edit***. The Edit Device Parameters Window will be displayed.
2. Click the **I/O Module** Tab.
3. Click the **Edit** Button on the *I/O Module* Tab Page. The Edit Unit Parameters Window will be displayed.
4. Select the tab page for the input where the cumulative counter is to be set, and select the *Cumulated Count* Check Box in the *Function Choice* Area.

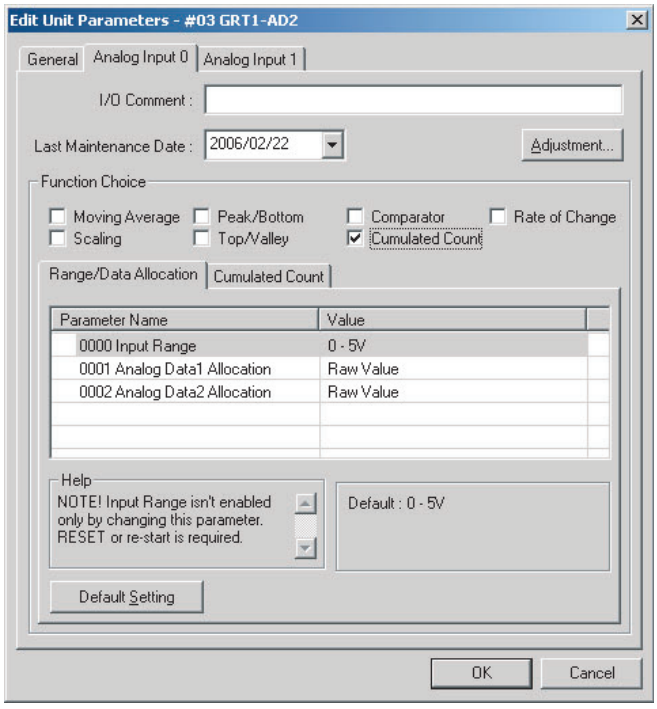

5. To set the counter unit, click the **Cumulated Count** Tab and select ***Hour*** or ***Minute*** from the pull-down menu in the *Cumulated Timer* Field.

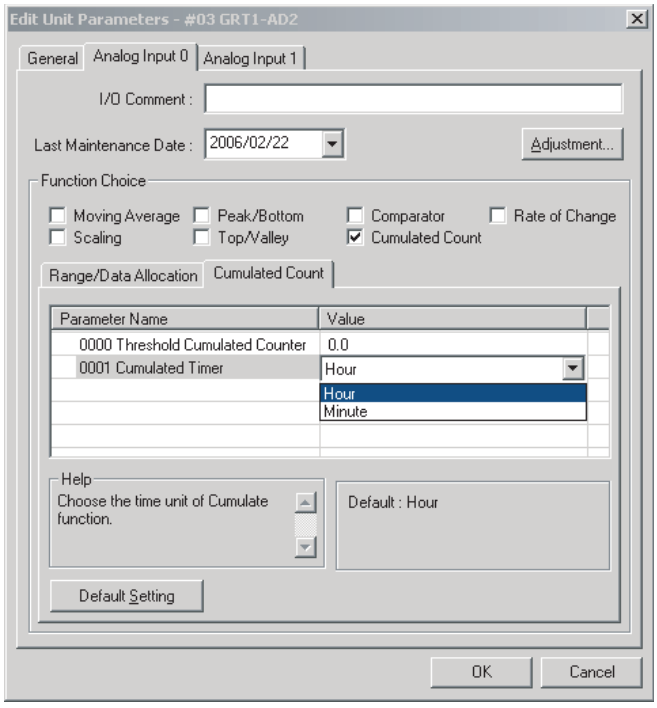

6. To set the monitor value, click the **Cumulated Count** Tab, and input the desired value in the *Threshold Cumulated Counter* Field.

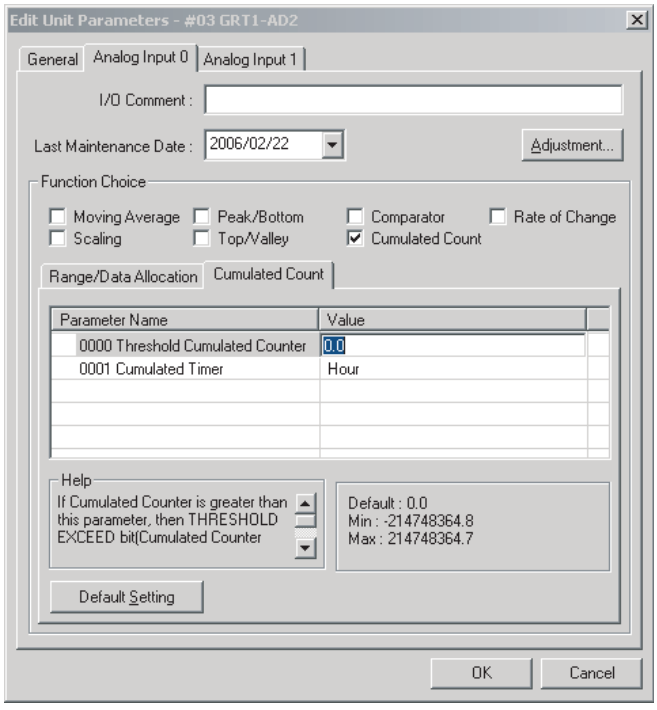

7. Return to the *General* Tab Page, click the **Download** Button, and then click the **Reset** Button to reset the Unit.
8. Click the **OK** Button to exit.

Last Maintenance Date

The last maintenance date can be set in the Unit separately for the Unit and the connected devices. It enables the user to easily determine the next maintenance date. The date can be set using the Setting Tool.

Setting Procedure (Example: DeviceNet Configurator)

■ Setting the Last Maintenance Date of the Unit

1,2,3...

1. In the Network Configuration Window for the Slice I/O Terminal, double-click the icon of the Slice I/O Terminal that is to be set. Alternatively, right-click the icon and select ***Parameters - Edit***. The Edit Device Parameters Window will be displayed.
2. Click the **I/O Module** Tab.
3. Click the **Edit** Button on the *I/O Module* Tab Page. The Edit Unit Parameters Window will be displayed.
4. Click the **General** Tab, and select the applicable date from the pull-down menu in the *Last Maintenance Date* Field. (To enter the current date, select ***Today***, which is at the bottom of the pull-down menu.)

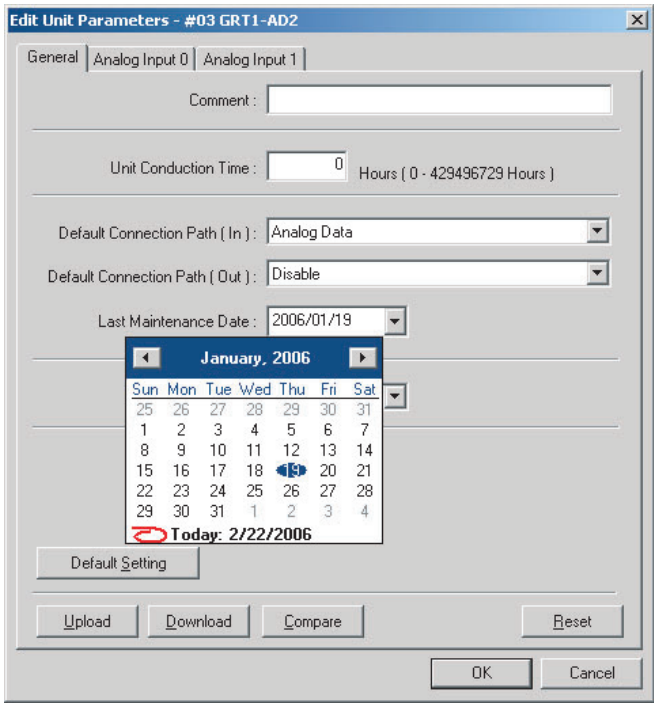

5. Click the **Download** Button, and then click the **Reset** Button to reset the Unit.
6. Click the **OK** Button to exit.

■ Setting the Last Maintenance Date of the Connected Device

1,2,3...

1. In the Network Configuration Window for the Slice I/O Terminal, double-click the icon of the Slice I/O Terminal that is to be set. Alternatively, right-click the icon and select ***Parameters - Edit***. The Edit Device Parameters Window will be displayed.

2. Click the tab page for the input that is connected to a connecting device requiring the last maintenance date to be set. Select the applicable date from the pull-down menu in the *Last Maintenance Date* Field. (To enter the current date, select ***Today***, which is at the bottom of the pull-down menu.)

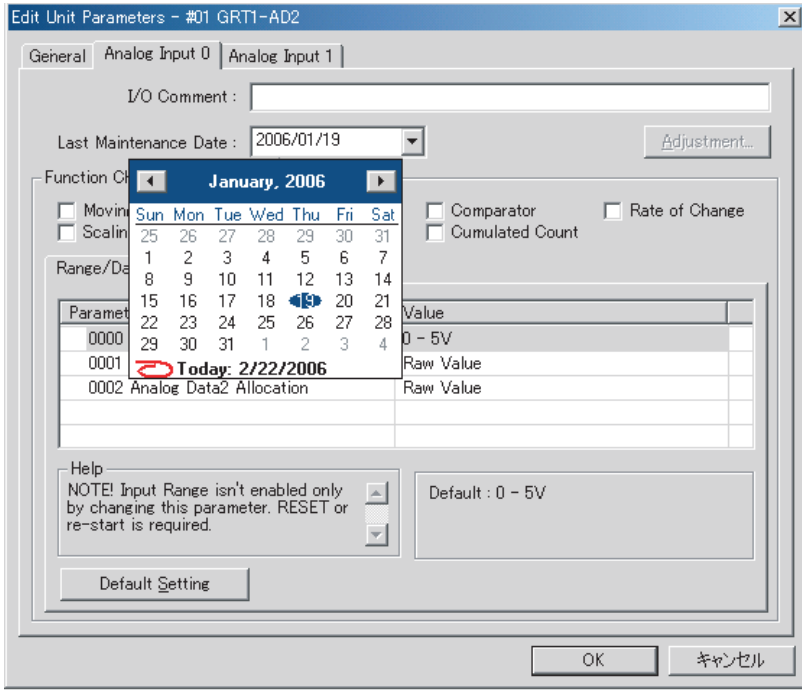

3. Return to the *General* Tab Page, click the **Download** Button, and then click the **Reset** Button to reset the Unit.
4. Click the **OK** Button to exit.

5-4-4 Calculating the Conversion Cycle

The conversion cycle speed can be improved by setting the number of AD conversion points, but will vary with the use of the math operations. Use the following table and formula to calculate the conversion cycle time.

Formula

AD conversion cycle time = AD base conversion time +Σ (Additional time for each function)

AD base conversion time: Cycle time when the math operation is not used at all. The value for each conversion point from 1 to 2 is different.

Extra time for each function: The additional time that is required when math operations are used.

The following table shows the AD base conversion times (unit: ms).

Time	1 point	2 points
Max.	1.66	2.42
Min.	0.68	0.81
Average	0.88	1.60

Note The DeviceNet communications cycle is 4 ms.

The following table shows the additional time required for each function (unit: ms).

Math operation	Additional time for each point
Moving average	0.045
Scaling	0.055
Peak/bottom hold	0.025
Top/valley hold	0.070
Comparator	0.065
Rate of change	0.030
Cumulative counter	0.035

Calculation Example

When using two points, and applying scaling to the first input, and the cumulative counter to the second input, the maximum AD conversion cycle time can be obtained by using the following formula.

Formula: 2.42 + 0.055 + 0.035 = 2.51 ms

5-5 Analog Output Units

5-5-1 GRT1-DA2C/GRT1-DA2V Analog Output Units

General Specifications

Item	Specifications
Unit power supply voltage	24 VDC (24 VDC –15% to +10%)
I/O power supply voltage	I/O power supply not required.
Noise immunity	Conforms to IEC 61000-4-4. 2.0 kV (power lines)
Vibration resistance	10 to 60 Hz, 0.7-mm double amplitude; 60 to 150 Hz, 50 m/s^2
Shock resistance	150 m/s^2
Dielectric strength	500 VAC for 1 min. with 1-mA sensing current (between communications and analog circuits)
Ambient temperature	–10 to 55°C (with no icing or condensation)
Ambient humidity	25% to 85% (with no condensation)
Operating environment	No corrosive gases
Storage temperature	–25 to 65°C (with no icing or condensation)
Mounting	35-mm DIN Track mounting

Performance Specifications

Item		Specifications	
		GRT1-DA2V Voltage output	GRT1-DA2C Current output
Output points		2 points (outputs 0 and 1)	
Output type		0 to 5 V 1 to 5 V 0 to 10 V –10 to 10 V	0 to 20 mA 4 to 20 mA
Output range setting method		• DIP switch: Outputs 0 and 1 set separately. • Setting Tool: Outputs 0 and 1 set separately.	
External output allowable load resistance		5 kΩ min.	350 Ω max.
Resolution		1/6,000 (full scale)	
Overall accuracy	25°C	±0.4% FS	±0.4% FS (See note.)
	–10 to 55°C	±0.8% FS	±0.8% FS (See note.)
Conversion time		2 ms/2 points	

Item	Specifications	
	GRT1-DA2V Voltage output	GRT1-DA2C Current output
DA conversion data	–10 to 10 V range: F448 to 0BB8 hex full scale (–3,000 to 3,000) Other ranges: 0000 to 1770 hex full scale (0 to 6,000) DA conversion range: ±5% FS of the above data ranges.	
Isolation method	Photocoupler isolation (between output and communications lines) No isolation between output signal wires.	
I/O connection method	Terminal-block connection	

Note In 0- to 20-mA mode, accuracy cannot be ensured at 0.2 mA or less.

Names and Functions of Parts

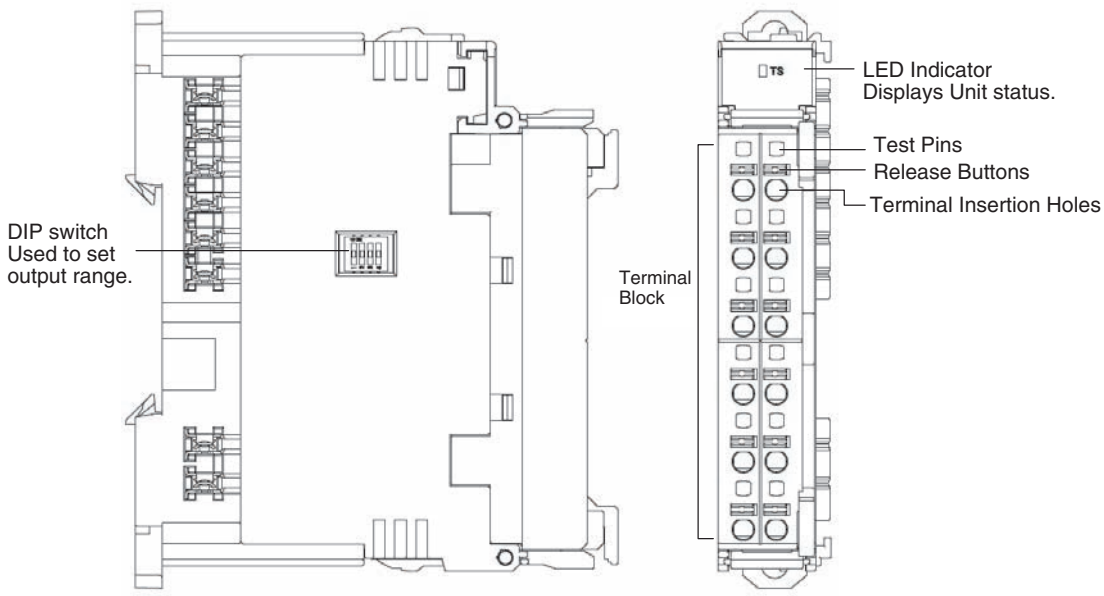

Setting the Output Signal Range

Setting with the DIP Switch

The output range can be set using the DIP switch or the Setting Tool.

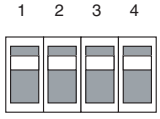

Note

1. Set pin 4 to ON if the DIP switch is used to set the range. If this pin is OFF, the DIP switch settings will not be enabled. If pin 4 is set to ON, you will not be able to set any functions, including the range setting, from the Setting Tool. Always set pin 4 to OFF when using the Setting Tool.
2. The DIP switch settings are read when the power is turned ON.

■ GRT1-DA2V

Each pin is set according to the following table.

Pin No.	Setting	Specifications
1	Set the output range for Outputs 0 and 1.	Default setting: All pins OFF
2		

Pin No.	Setting	Specifications
3	Reserved	Fixed at OFF.
4	Set the range setting method.	OFF: Set using Setting Tool. ON: Set using DIP switch. Default setting: OFF

Output range	Pin 1	Pin 2	Pin 3
0 to 5 V (Factory setting)	OFF	OFF	Fixed at OFF.
1 to 5 V	ON	OFF	
0 to 10 V	OFF	ON	
–10 to 10 V	ON	ON	

■ **GRT1-DA2C**

Each pin is set according to the following table.

Pin No.	Setting	Specifications
1	Set output range for Outputs 0 and 1.	Default setting: All pins OFF
2	Reserved	Fixed at OFF.
3		
4	Range setting method	OFF: Set using Setting Tool. ON: Set using DIP switch. Default setting: OFF

Output range	Pin 1	Pin 2	Pin 3
4 to 20 mA	OFF	Fixed at OFF.	
0 to 20 mA	ON		

Setting Using the DeviceNet Configurator

Use the following procedure to set the output range for each output using the Configurator.

1,2,3...

1. In the Network Configuration Window for the Slice I/O Terminal, double-click the icon of the Slice I/O Terminal that is to be set. Alternatively, right-click the icon and select ***Parameters - Edit***. The Edit Device Parameters Window will be displayed.
2. Click the **I/O Module** Tab.
3. Click the **Edit** Button on the *I/O Module* Tab Page. The Edit Unit Parameters Window will be displayed.
4. Select the tab page for the output where the range is to be changed.

5. Click the *Output Range* Field, and select the desired range.

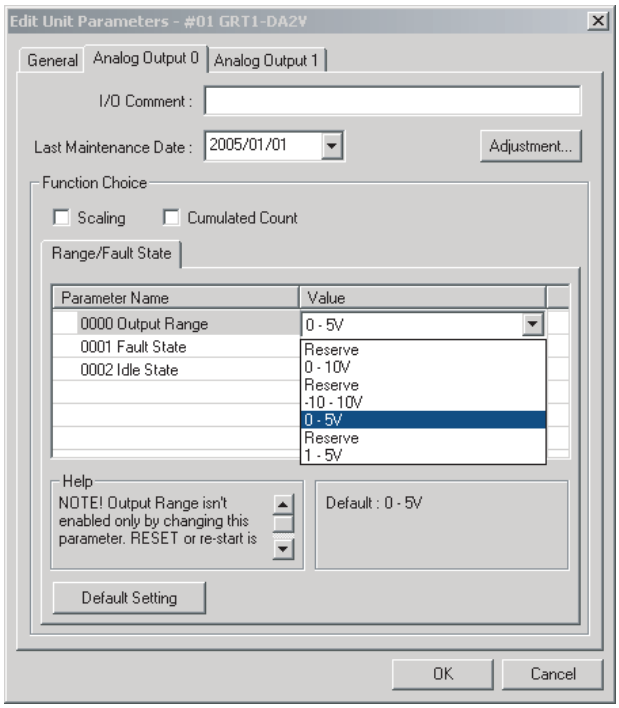

6. Return to the *General* Tab Page, click the **Download** Button, and then click the **Reset** Button to reset the Unit.
7. Click the **OK** Button to exit.

Internal Circuits

GRT1-DA2V

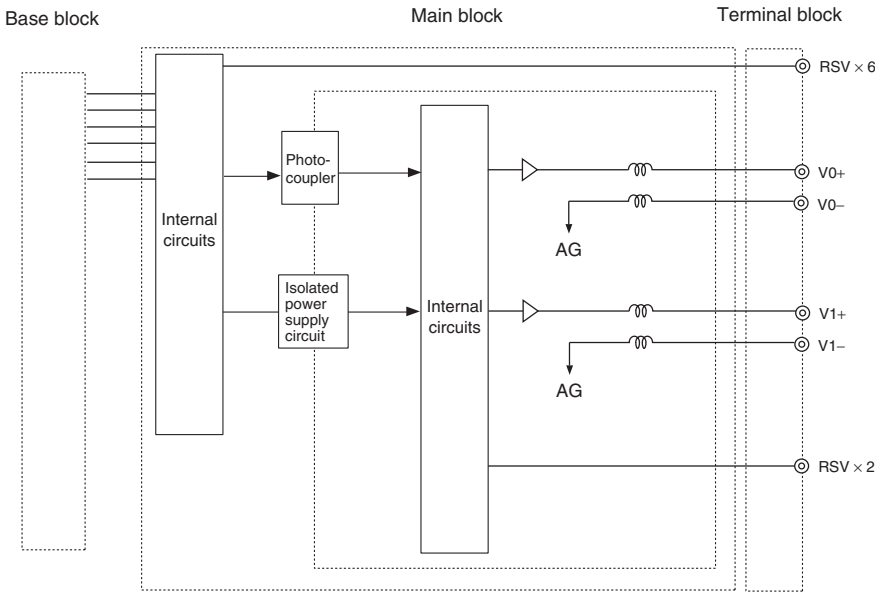

GRT1-DA2C

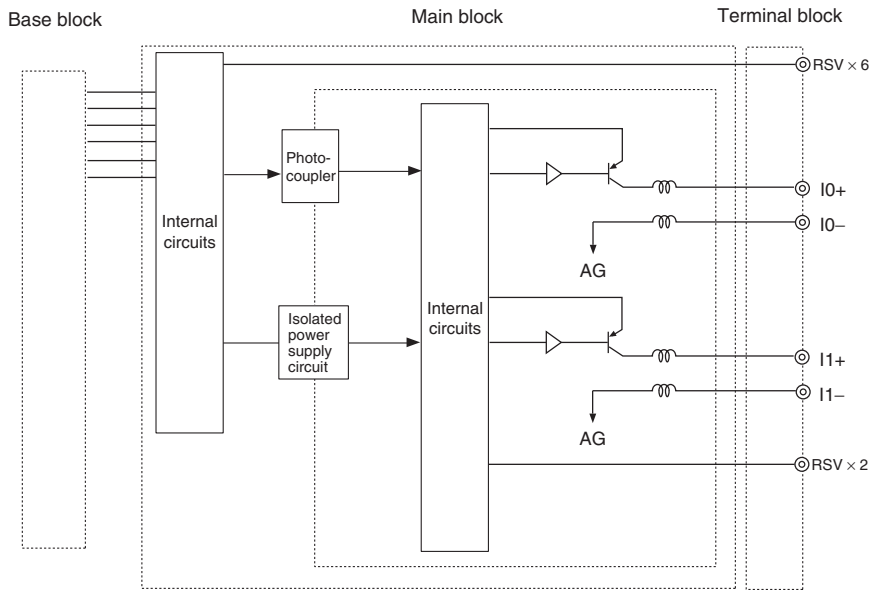

Wiring

The terminal wiring varies according to whether voltage or current output is used.

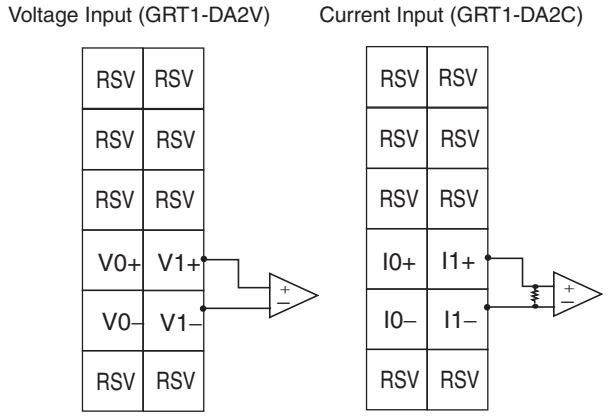

Note An internal signal is connected to the RSV terminal to dissipate heat. Do not wire the RSV terminal.

Output Range and Conversion Data

The digital values that are output are converted to analog data according to the output range used, as shown below. When the value exceeds the output range, the DA conversion data is fixed at the High Limit or Low Limit set value.

Output Range: 0 to 5 V

The values 0000 to 1770 hex (0 to 6,000) correspond to the voltage range 0 to 5 V. The output range is –0.25 to 5.25 V.

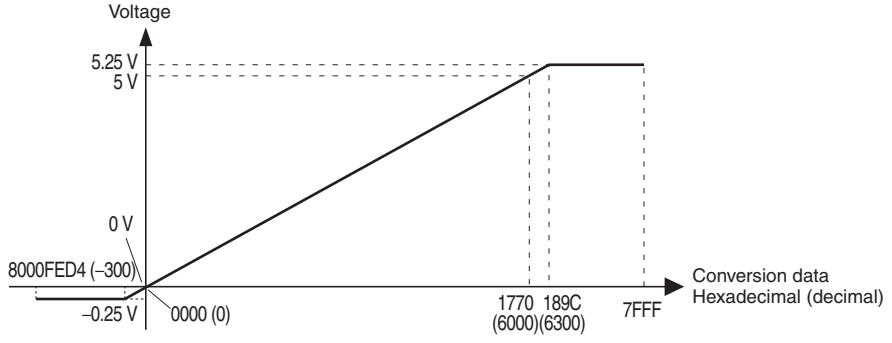

Output Range: 1 to 5 V

The values 0000 to 1770 hex (0 to 6,000) correspond to the voltage range 1 to 5 V. The output range is 0.8 to 5.2 V.

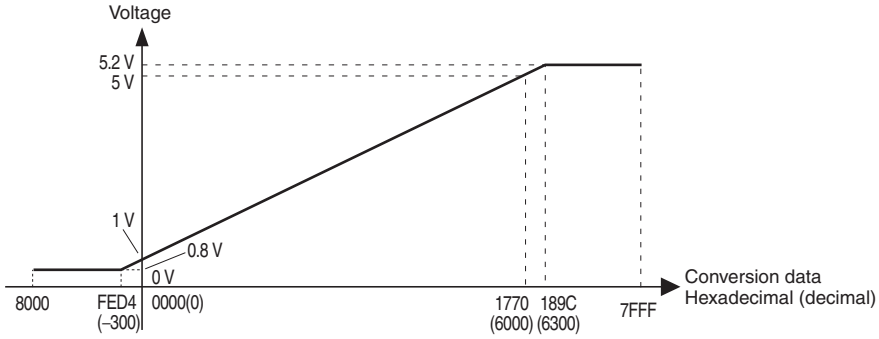

Output Range: 0 to 10 V

The values 0000 to 1770 hex (0 to 6,000) correspond to the voltage range 0 to 10 V. The output range is –0.5 to 10.5 V.

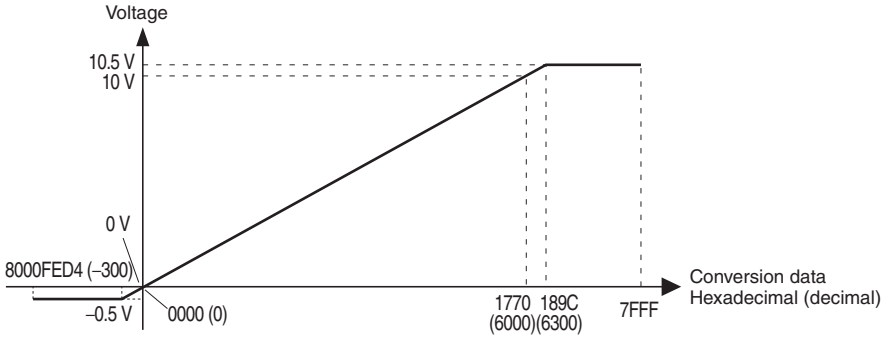

Output Range: –10 to 10 V

The values F448 to 0BB8 hex (–3,000 to 3,000) correspond to the voltage range –10 to 10 V. The output range is –11 to 11 V. Negative voltages are specified as two's complements (16 bits).

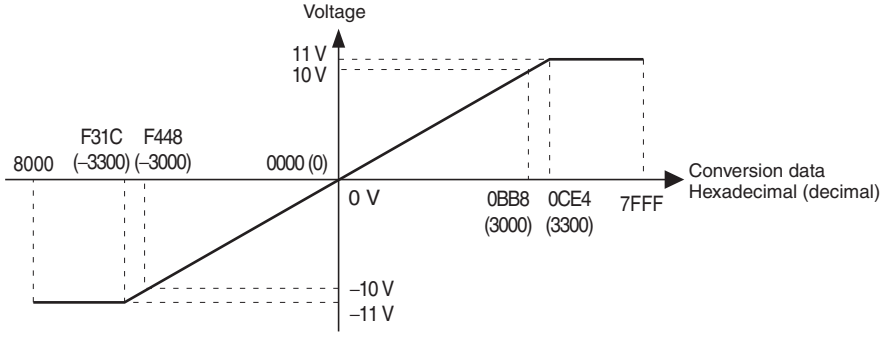

Output Range: 4 to 20 mA

The values 0000 to 1770 hex (0 to 6,000) correspond to the current range 4 to 20 mA. The output range is 3.2 to 20.8 mA.

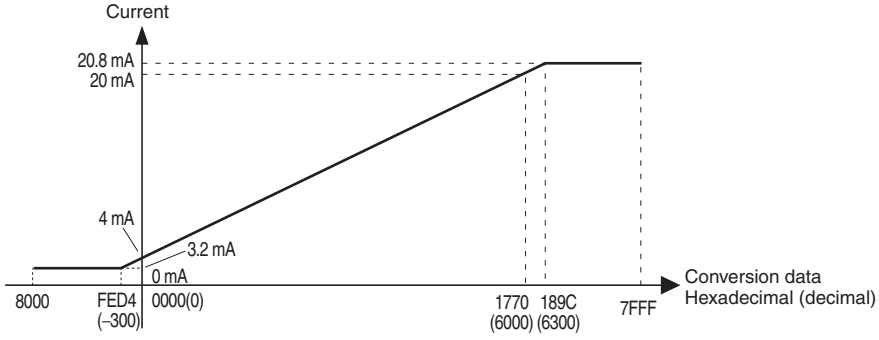

Output Range: 0 to 20 mA

The values 0000 to 1770 hex (0 to 6,000) correspond to the current range 0 to 20 mA. The output range is 0 to 21 mA.

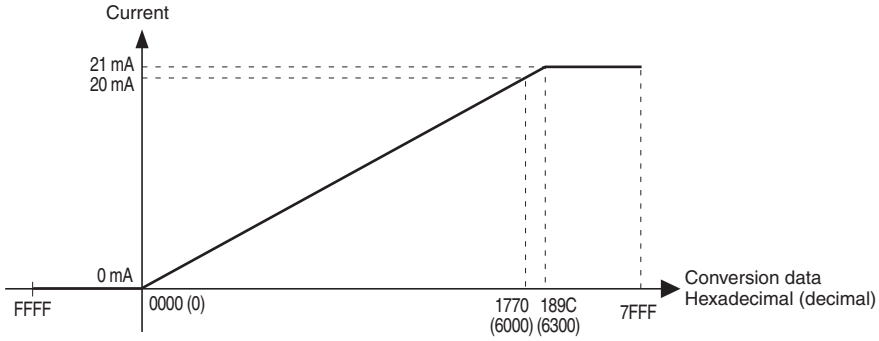

DA Conversion Data

DA conversion data is output to the Communications Unit as shown in the following diagram.

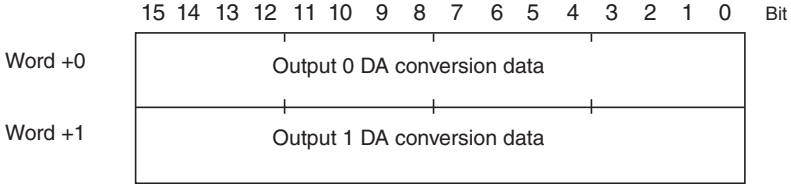

When outputting negative voltages, specify the DA conversion data as two's complements. The NEG instruction can be used to obtain two's complements from absolute values.

Note Although the number of DA conversion points is set from the Setting Tool, the allocated data does not change (i.e., two words are used).

Dimensions

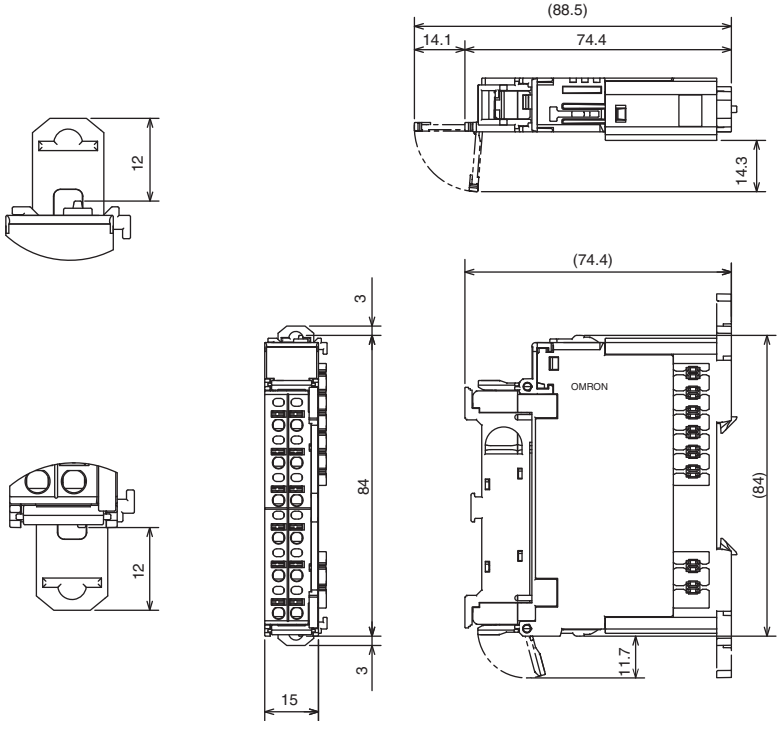

5-5-2 I/O Data and Allocation Methods

When the Analog Output Unit's default settings are used, output data is allocated. No special settings are required. Two words (four bytes) of output data are allocated as two's complement.

15	8 7	0
Analog output value for Output 0		
Analog output value for Output 1		

5-5-3 Functions and Setting Methods

Scaling

The default setting is used to perform DA conversion, converting analog output values that have been scaled to a count of 0 to 6,000 into corresponding digital values in the output signal range. Scaling can be used to change scaled values that correspond to the output signal range into other values required by the user (industry unit values). Scaling also eliminates the need for ladder programming in the Master to perform math operations. The following two methods of scaling can be used.

Default Scaling

Default scaling converts analog output values into voltage or current values. The units used are mV or µA. When default scaling is selected, scaling is performed according to the output range, as shown in the following table.

Output range	0 to 5 V	0 to 10 V	1 to 5 V	–10 to 10 V	0 to 20 mA	4 to 20 mA
100%	5,000 mV	10,000 mV	5,000 mV	10,000 mV	20,000 µA	20,000 µA
0%	0000 mV	0000 mV	1,000 mV	–10,000 mV	0000 µA	4,000 µA
Off-wire	---	---	7FFF hex	---	---	7FFF hex

User Scaling

User scaling allows analog output values to be scaled to user-defined values. The conversion values for 100% and 0% are set using the Setting Tool.

Input range	0 to 5 V	0 to 10 V	1 to 5 V	–10 to 10 V	0 to 20 mA	4 to 20 mA
100%	Set using Setting Tool (–28,000 to 28,000)					
0%	Set using Setting Tool (–28,000 to 28,000)					
Off-wire	---	---	7FFF hex	---	---	7FFF hex

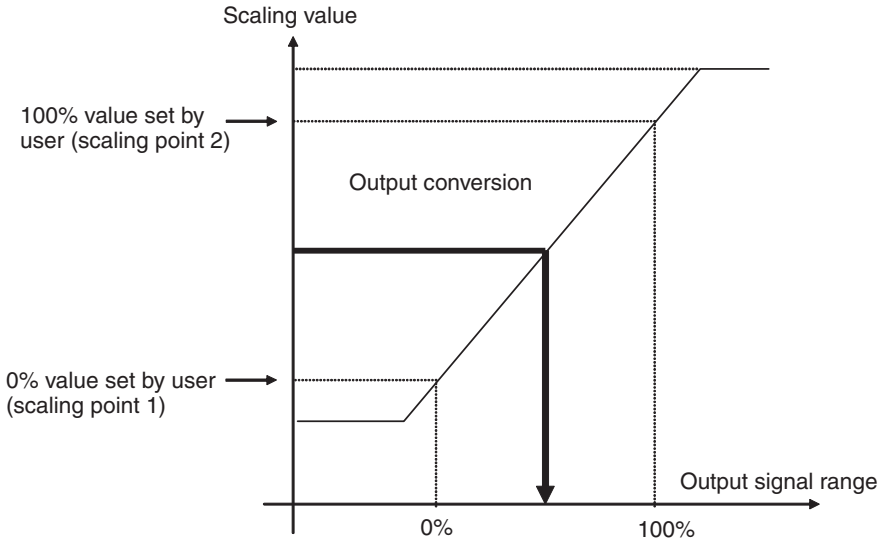

Note Reverse scaling, where the 0% scaling value is higher than the 100% scaling value, is also supported.

Offset Compensation

Offset compensation is used to compensate for error that occurs during scaling. The offset amount is added to the scaled line before processing, as shown in the following diagram. The offset (error) value can be input between –28,000 and 28,000, but if underflow or overflow occurs in the scaled line, the 100% or 0% output will not be possible. The High Limit is 7FFE hex and the Low Limit is 8000 hex.

Note The offset value can be set even when using default scaling.

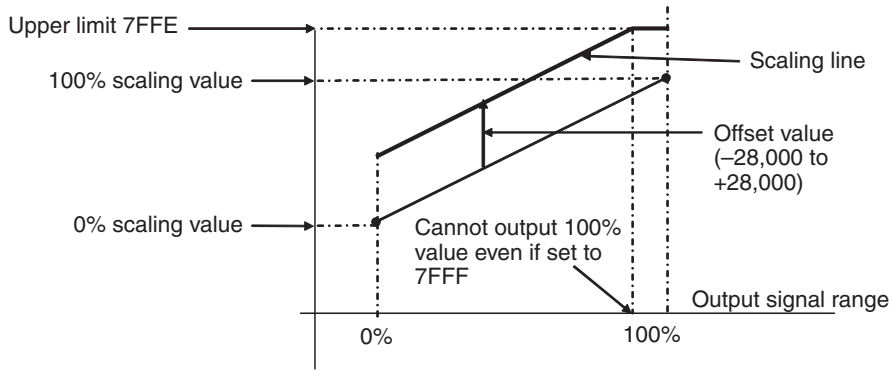

Setting Procedure (Example: DeviceNet Configurator)

1,2,3...

1. In the Network Configuration Window for the Slice I/O Terminal, double-click the icon of the Slice I/O Terminal that is to be set. Alternatively, right-click the icon and select ***Parameters - Edit***. The Edit Device Parameters Window will be displayed.
2. Click the **I/O Module** Tab.
3. Click the **Edit** Button on the *I/O Module* Tab Page. The Edit Unit Parameters Window will be displayed.

4. Select the tab page for the output where scaling is to be performed, and select the *Scaling* Check Box in the *Function Choice* Area.

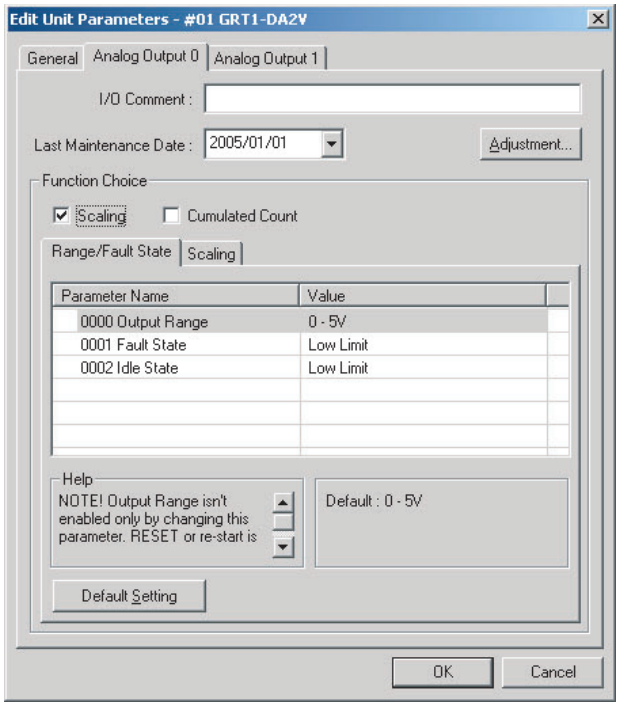

5. To select the scaling type, click the **Scaling** Tab, and select either ***Default Scaling*** or ***User Scaling***. The following example shows when *User Scaling* is selected.

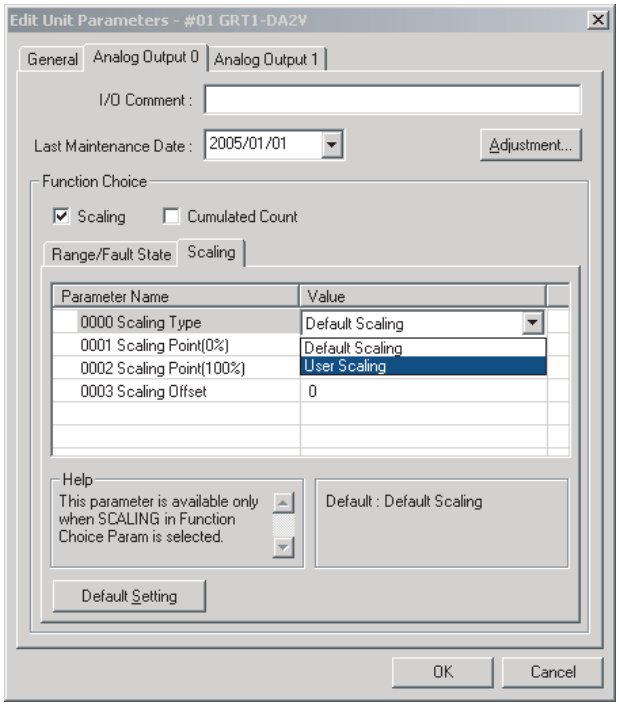

6. For user scaling, set the 0% value in the *Scaling point 1* Field, and set the 100% value in the *Scaling point 2* Field.

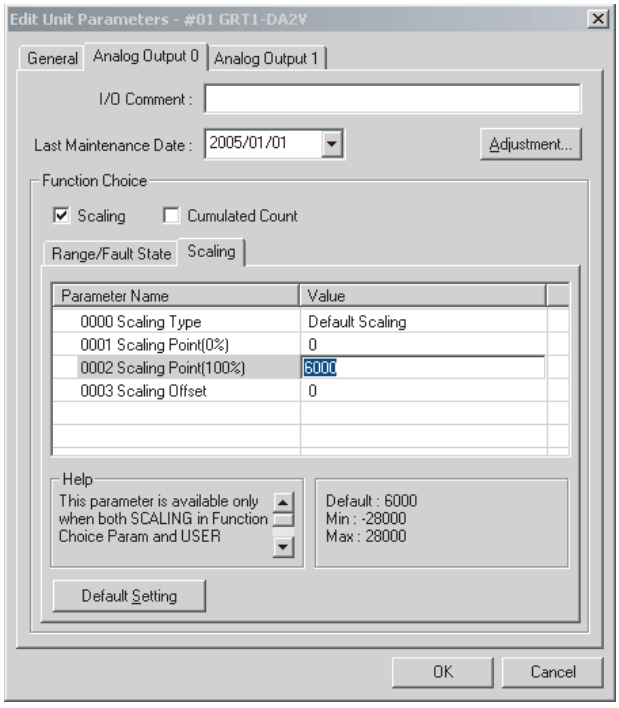

7. For offset compensation, set the offset value in the *Scaling Offset* Field. Also select either ***Default Scaling*** or ***User Scaling*** in the *Scaling Type* Field.

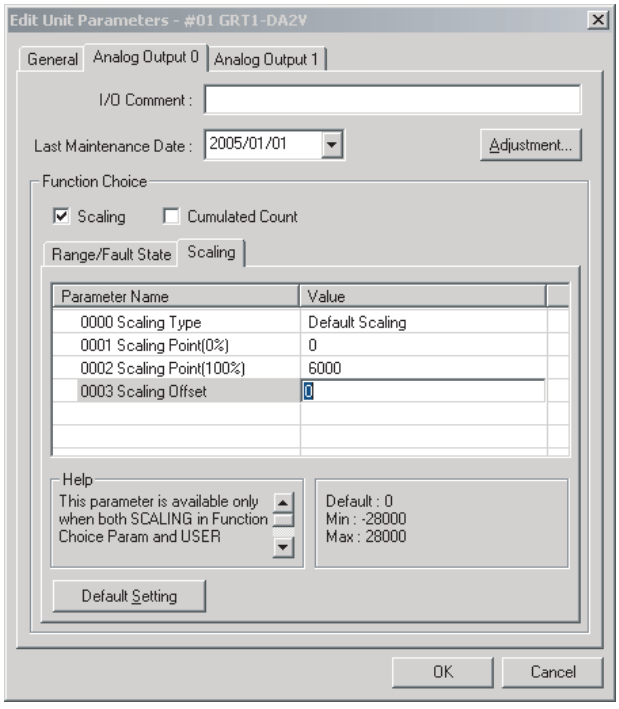

8. Return to the *General* Tab Page, click the **Download** Button, and then click the **Reset** Button to reset the Unit.
9. Click the **OK** Button to exit.

User Adjustment

Depending on factors such as the characteristics and connection methods of the output device, the output can be adjusted to compensate for error in the final output. The following diagram shows when compensation is applied to the conversion line at the two points for 0% and 100%.

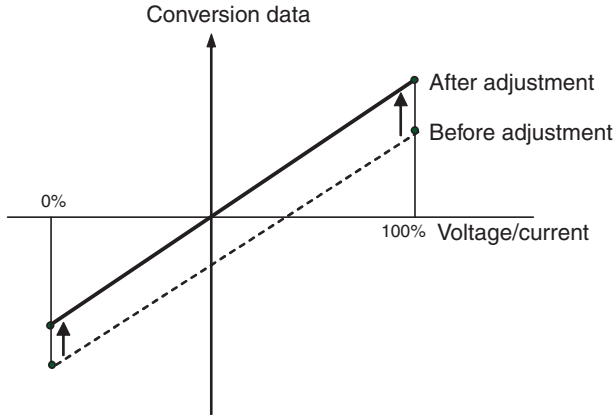

The ranges supported for adjustment (–5% to +5%) are shown in the following table. If adjustment cannot be performed within the following ranges, check the method being used to connect the output device.

Output range	Low Limit	High Limit
0 to 5 V	–0.25 to 0.25 V	4.75 to 5.25 V
1 to 5 V	0.8 to 1.2 V	4.8 to 5.2 V
0 to 10 V	–0.5 to 0.5 V	9.5 to 10.5 V
–10 to 10 V	–11 to –9.0 V	9.0 to 11 V
4 to 20 mA	3.2 to 4.8 mA	19.2 to 20.8 mA
0 to 20 mA	0.2 to 1.0 mA	19 to 21 mA

Setting Procedure (Example: DeviceNet Configurator)

1,2,3...

1. In the Network Configuration Window for the Slice I/O Terminal, double-click the icon of the Slice I/O Terminal that is to be set. Alternatively, right-click the icon and select ***Parameters - Edit***. The Edit Device Parameters Window will be displayed.
2. Click the **I/O Module** Tab.
3. Click the **Edit** Button on the *I/O Module* Tab Page. The Edit Unit Parameters Window will be displayed.

4. Select the tab page for the output to be adjusted, and click the **Adjustment** Button. (At the same time, set the output range again.)

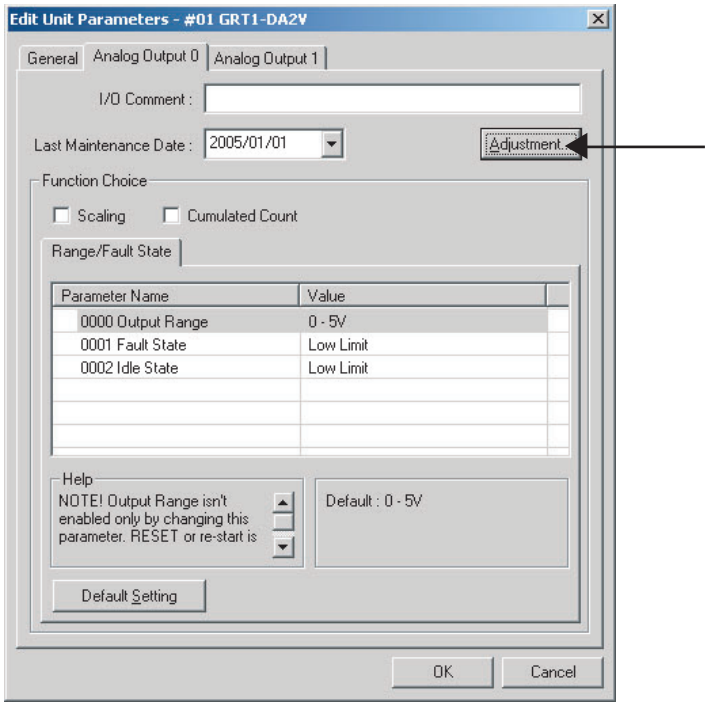

Adjusting the Low Limit

5. Output the value that is equivalent to 0% from the Master Unit. Always perform adjustment with the 0% value.
6. Adjust the analog value that is output from the terminal using the Low Limit slide bar, as shown in the following window. Repeat adjustments until the correct 0% value is output from the output device. After compensation is completed, click the **Fix lower adjusting Value** Button.

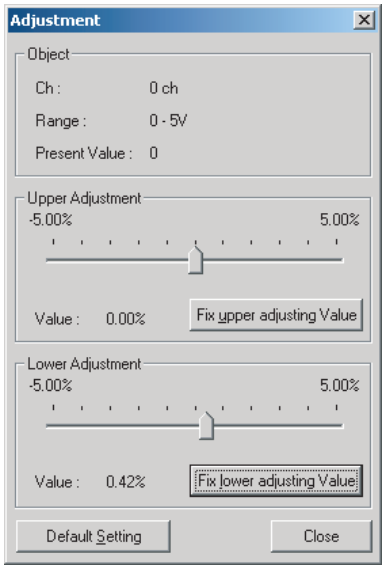

7. To return to the default settings, click the **Default Setting** Button
8. Close the Adjustment Window, return to the *General* Tab Page, click the **Download** Button, and then click the **Reset** Button to reset the Unit.
9. Click the **OK** Button to exit.

Adjusting the High Limit

10. Output the value from the Master Unit that is equivalent to the Output Unit's maximum (100%) value. Adjustment is best performed using the 100% value, but can be performed using a lower value.
11. Adjust the analog value that is output from the terminal using the High Limit slide bar, as shown in the following window. Repeat adjustments until the correct 100% value is output from the output device. After compensation is completed, click the **Fix upper adjusting Value** Button.

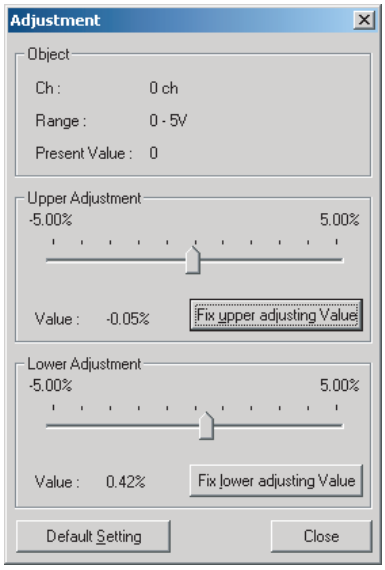

Note If the High Limit adjustment is not performed for the 100% value, a discrepancy will occur when the Low Limit is adjusted, so always adjust the Low Limit of Output Units before adjusting the High Limit.

Cumulative Counter

The cumulative counter calculates an approximation to the integral of analog output values over time. The cumulated value can be calculated in "count hours" (by selecting "hours") or "count minutes" (by selecting "minutes"). The count value is the analog output value in the industry unit obtained after scaling. For example, 100.0 count hours indicates a value equivalent to an analog output value of 100 counts continuing for one hour. The counter range for a four-byte area (two words) for count hours or count minutes is –214,748,364.8 to 214,748,364.7. Data is displayed on the Configurator in units of 0.1 hours or minutes.

Monitor values can also be set in the Unit. When the cumulated count value exceeds the set monitor value, the Cumulative Counter Flag in the area for Generic Status Flags turns ON.

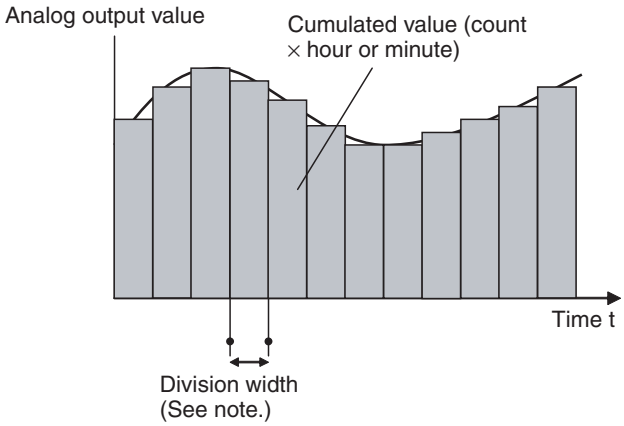

Note The following table shows the divisions for the cumulative counter.

Unit	Divisions
Hour	3.6 s (1/1,000 hour)
Minute	60 ms (1/1,000 minute)

Setting Procedure (Example: DeviceNet Configurator)

1,2,3...

1. In the Network Configuration Window for the Slice I/O Terminal, double-click the icon of the Slice I/O Terminal that is to be set. Alternatively, right-click the icon and select ***Parameters - Edit***. The Edit Device Parameters Window will be displayed.
2. Click the **I/O Module** Tab.
3. Click the **Edit** Button on the *I/O Module* Tab Page. The Edit Unit Parameters Window will be displayed.

4. Select the tab page for the output where the cumulated counter is to be set, and select the *Cumulated Count* Check Box in the *Function Choice* Area.

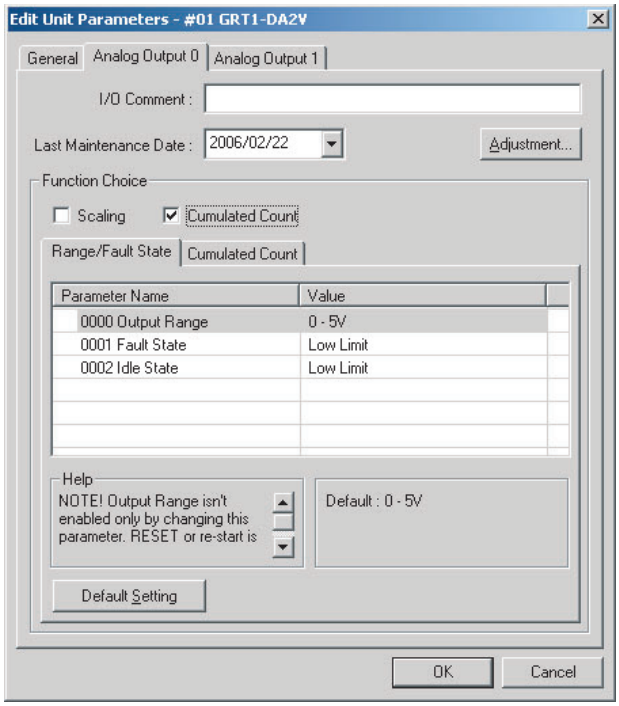

5. To set the counter unit, click the **Cumulated Count** Tab and select ***Hour*** or ***Minute*** from the pull-down menu in the *Cumulated Timer* Field.

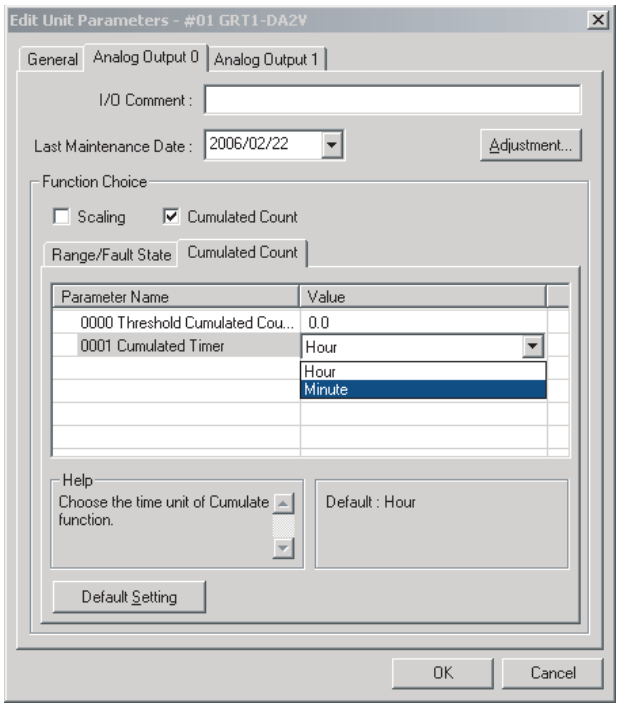

6. To set the monitor value, click the **Cumulated Count** Tab, and input the desired value in the *Threshold Cumulated Counter* Field.

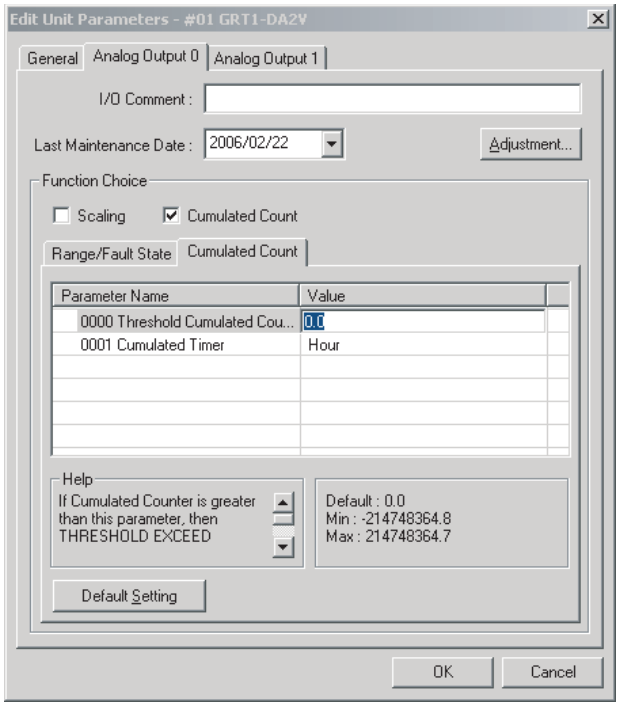

7. Return to the *General* Tab Page, click the **Download** Button, and then click the **Reset** Button to reset the Unit.
8. Click the **OK** Button to exit.

Setting Output Value for Errors

The Output Unit value that is output when communications errors (timeout and BusOff errors) or slice bus errors occur can be set in word units. The four output value settings are set using the Setting Tool.

Setting Patterns

Low limit	Outputs the values in the following table according to the output range.
High limit	Outputs the values in the following table according to the output range.
Hold last state	Holds and outputs the value from immediately before the error occurred.
Zero count	Outputs the value when 0 is written from the Host. This setting will be affected by scaling settings that are used.

Output Ranges and Values

Output range	Low limit	High limit	Hold last state
0 to 5 V	–0.25 V	5.25 V	Holds value.
1 to 5 V	0.8 V	5.2 V	Holds value.
0 to 10 V	–0.5 V	10.5 V	Holds value.
–10 to 10 V	–11 V	11 V	Holds value.
4 to 20 mA	3.2 mA	20.8 mA	Holds value.
0 to 20 mA	0 mA	21 mA	Holds value.

Note When a node address has been used more than once or a Unit error has occurred, the current output will be 0 mA and the voltage output will be 0 V, regardless of the setting.

Setting Procedure (Example: DeviceNet Configurator)

1,2,3...

1. In the Network Configuration Window for the Slice I/O Terminal, double-click the icon of the Slice I/O Terminal that is to be set. Alternatively, right-click the icon and select ***Parameters - Edit***. The Edit Device Parameters Window will be displayed.
2. Click the **I/O Module** Tab.
3. Click the **Edit** Button on the *I/O Module* Tab Page. The Edit Unit Parameters Window will be displayed.
4. Select the tab page for the output where the error output value is to be set, and select the desired item from the pull-down menu in the *Fault State* (output during a slice bus error) Field or *Idle State* (output during a communications error) Field.

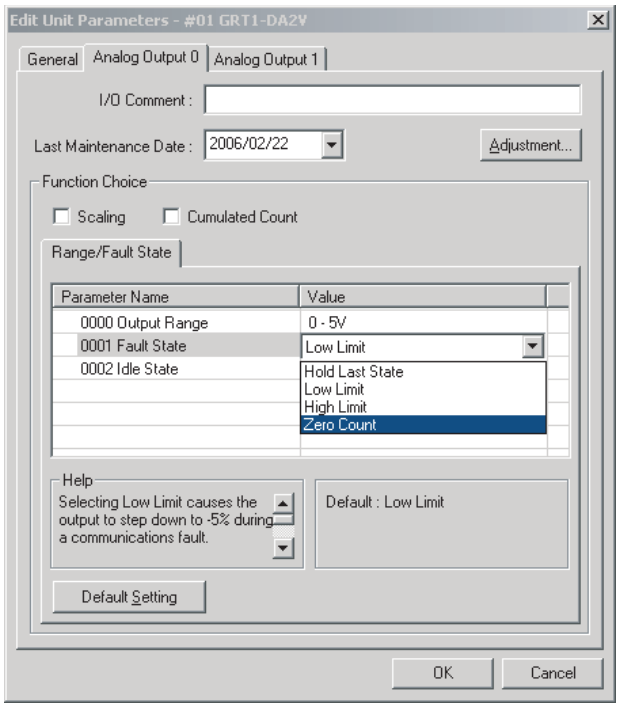

5. Return to the *General* Tab Page, click the **Download** Button, and then click the **Reset** Button to reset the Unit.
6. Click the **OK** Button to exit.

SECTION 6
Temperature Input Units

This section provides the information required to operate the Temperature Input Units, including functions, status areas, windows, specifications, wiring, data allocation, and settings.

6-1 Overview of the Temperature Input Units 156
- 6-1-1 Temperature Input Units 156
- 6-1-2 Comparison with Previous Models with Platinum Resistance Thermometer Inputs 156
- 6-1-3 Comparison with Previous Models with Thermocouple Inputs 158
- 6-1-4 List of Data Processing Functions 159
- 6-1-5 Data Processing Flowcharts 159
- 6-1-6 Selecting Data 160
- 6-1-7 I/O Data 161

6-2 Status Areas 162

6-3 Maintenance Information Window 164
- 6-3-1 Checking Maintenance Information 164

6-4 Temperature Input Units 167
- 6-4-1 GRT1-TS2@ Temperature Input Units 167
- 6-4-2 Temperature Input Unit Display Modes 180
- 6-4-3 I/O Data Allocation Methods 182
- 6-4-4 Functions and Settings 188

6-1 Overview of the Temperature Input Units

This section provides an overview of the Temperature Input Units, including details on functions and setting methods.

6-1-1 Temperature Input Units

In addition to the functions common to the GRT1 Series (backup, restore, online conversion, etc.), other functions specific to the Temperature Input Units (scaling, peak/bottom hold, etc.) are available. The Temperature Input Units are also able to internally perform math on temperature input values, which previously required ladder programming in the host PLC. Temperature data can be selected from the six values obtained from math operations and allocated as I/O in combination with Status Flags or other status information. The Setting Tool can be used to allocate this status data, to make settings for monitoring and specific Temperature Input Unit functions, and to monitor operation.

6-1-2 Comparison with Previous Models with Platinum Resistance Thermometer Inputs

Series	**GRT1 Series**		**DRT2 Series**
Model	**GRT1-TS2P**	**GRT1-TS2PK**	**DRT2-TS04P**
Input type	Platinum resistance thermometer input		
Maintenance method	Terminal block and main block can be separated.		Removable terminal block
Input type setting method	Hardware DIP switch setting, software Setting Tool. Each input bit can be set up individually when using the Setting Tool.		
Input type (sensor type)	PT100 (–200 to 850°C) or PT100 (–200 to 200°C)	PT1000 (–200 to 850°C) or PT1000 (–200 to 200°C)	PT, JPT, PT2, or JPT2
Input accuracy	–200 to 850°C input range: (±0.3% of indication value or ±0.8°C, whichever is larger) ±1 digit max. –200 to 200°C input range: (±0.3% of indication value or ±0.5°C, whichever is larger) ±1 digit max.		
Conversion cycle	250 ms/2 points		250 ms/4 points
1/100 display mode	The temperature data is multiplied by 100 and sent to the Master as 8-digit binary data. (The data for each input consists of two words.)		
DRT1-compatible 1/100 display mode	Not supported.		Supported.
Unit power supply	Supplied from slice bus.		Supplied from communications power supply.
Communications power supply current consumption	None		70 mA max.
Connections	None		Poll, Bitstrobe, and COS/cyclic
Allocated I/O data	Default: Temperature data for 2 points The Setting Tool can be used to allocate the peak value, bottom value, top value, valley value, rate of change, comparator results, Status Flags, etc.		Default: Temperature data for 4 points The DeviceNet Configurator can be used to allocate peak value, bottom value, top value, valley value, rate of change, comparator results, Status Flags, etc.
Node address setting	No setting required.		Set using the rotary switches or the DeviceNet Configurator.
Baud rate setting	No setting required.		Automatically detected: Uses baud rate set for Master Unit.

Series		**GRT1 Series**		**DRT2 Series**
Model		**GRT1-TS2P**	**GRT1-TS2PK**	**DRT2-TS04P**
Moving average		Supported. (Set using Setting Tool.)		Supported. (Set using DeviceNet Configurator.)
Off-wire detection		Supported.		
Input error detection disable setting		Supported.		Not supported.
Scaling, offset compensation, peak/bottom hold, top/valley hold, rate of change operations, comparator		Supported. (Set using Setting Tool.)		Supported. (Set using DeviceNet Configurator.)
Maintenance functions	User adjustment			
	Last maintenance date			
	Data comparison between channels			
	Cumulated count			
	Top/valley count			
	Temperature range total time			

6-1-3 Comparison with Previous Models with Thermocouple Inputs

Series		**GRT1 Series**	**DRT2 Series**
Model		**GRT1-TS2T**	**DRT2-TS04T**
Input type		Thermocouple input	
Maintenance method		Terminal block and main block can be separated.	Removable terminal block
Input type setting method		Hardware DIP switch setting, software Setting Tool. Each input bit can be set up individually when using the Setting Tool.	
Input type (sensor type)		R, S, K, J, T, B, L, E, U, N, W, PL2	
Input accuracy		±2°C, ±1 digit max. (See note.)	(±0.3% of indication value or ±1°C, whichever is larger) ±1 digit max.
Conversion cycle		250 ms/2 points	250 ms/4 points
1/100 display mode		The temperature data is multiplied by 100 and sent to the Master as 8-digit binary data. (The data for each input consists of two words.)	
DRT1-compatible 1/100 display mode		Not supported.	Supported.
Unit power supply		Supplied from slice bus.	Supplied from communications power supply.
Communications power supply current consumption		None	70 mA max.
Connections		None	Poll, Bitstrobe, and COS/cyclic
Allocated I/O data		Default: Temperature data for 2 points The Setting Tool can be used to allocate the peak value, bottom value, top value, valley value, rate of change, comparator results, Status Flags, etc.	Default: Temperature data for 4 points The DeviceNet Configurator can be used to allocate peak value, bottom value, top value, valley value, rate of change, comparator results, Status Flags, etc.
Node address setting		No setting required.	Set using the rotary switches or the DeviceNet Configurator.
Baud rate setting		No setting required.	Automatically detected: Uses baud rate set for Master Unit.
Moving average		Supported. (Set using Setting Tool.)	Supported. (Set using DeviceNet Configurator.)
Off-wire detection		Supported.	
Input error detection disable setting		Supported.	Not supported.
Scaling, offset compensation, peak/bottom hold, top/valley hold, rate of change operations, comparator		Supported. (Set using Setting Tool.)	Supported. (Set using DeviceNet Configurator.)
Maintenance functions	User adjustment		
	Last maintenance date		
	Data comparison between channels		
	Cumulated count		
	Top/valley count		
	Temperature range total time		

Note The indication accuracy depends on the mounting direction and the Units on both sides of and directly next to the GRT1-TS2T. Refer to the following information. Refer to *Performance Specifications* on page 169.

6-1-4 List of Data Processing Functions

GRT1-TS2□ Temperature Input Units

Function		Details	Default
Moving average		Calculates the average of the past eight temperature input values, and produces a stable input value even when the input value is unsteady.	Moving average disabled.
Scaling		Performs scaling. The unit can be converted to default upper and lower limits to reduce the number of operations requiring ladder programming in the Master CPU Unit. Scaling also supports an offset function for compensating for mounting errors in sensors and other devices.	Disabled (0 to 28,000)
Peak/bottom hold		Holds the maximum and minimum temperature input values.	Disabled
Top/valley hold		Holds the top and valley values for temperature input values.	Disabled
Rate of change		Calculates the rate of change for temperature input values.	Disabled
Comparator		Compares the temperature input value or an data after math processing (i.e., value for peak, bottom, top, valley, rate of change) with the four set values HH, H, L, and LL, and indicates the result with the Temperature Status Flags.	Disabled
Off-wire detection		Detects disconnections of sensors.	Enabled
Input error detection disable		Detection of input errors, including off-wire detection, can be disabled. This setting would be used for inputs that are not used.	Disabled
User adjustment		An offset caused by hardware inaccuracy (or other factor) can be corrected with an arbitrary user-set input value.	Disabled
Last maintenance date		Records the date of the last maintenance in the Unit.	2007/1/1
Data comparison between channels		Calculates the difference in temperature between the two input channels to enable a relative comparison.	Disabled
Replacement monitoring functions	Cumulated count	Calculates the total heat exposure of a device or sensor by integrating the temperature over the measurement time.	Disabled
	Top/valley count	Counts the number of heating cycles handled by a device or application that has fixed cycles of temperature change.	Disabled
	Temperature range total time	Measures how long the system is at a user-set temperature or within a user-set temperature range.	Disabled

6-1-5 Data Processing Flowcharts

Temperature Input Value

The following math operations can be performed on the external temperature input value. The values obtained after processing (temperature input values) can be allocated for the Master.

- Scaling as required by the user
- Moving average processing

Other Operation Results

After moving average and scaling processing, the temperature input value can be processed using the following operations. The values after processing are called peak value, bottom value, top value, valley value, rate of change, and cumulated value.

- Peak/bottom operation
- Top/valley operation
- Rate of change operation
- Cumulative operation (maintenance function)

Analog processing is performed according to the following flowchart.

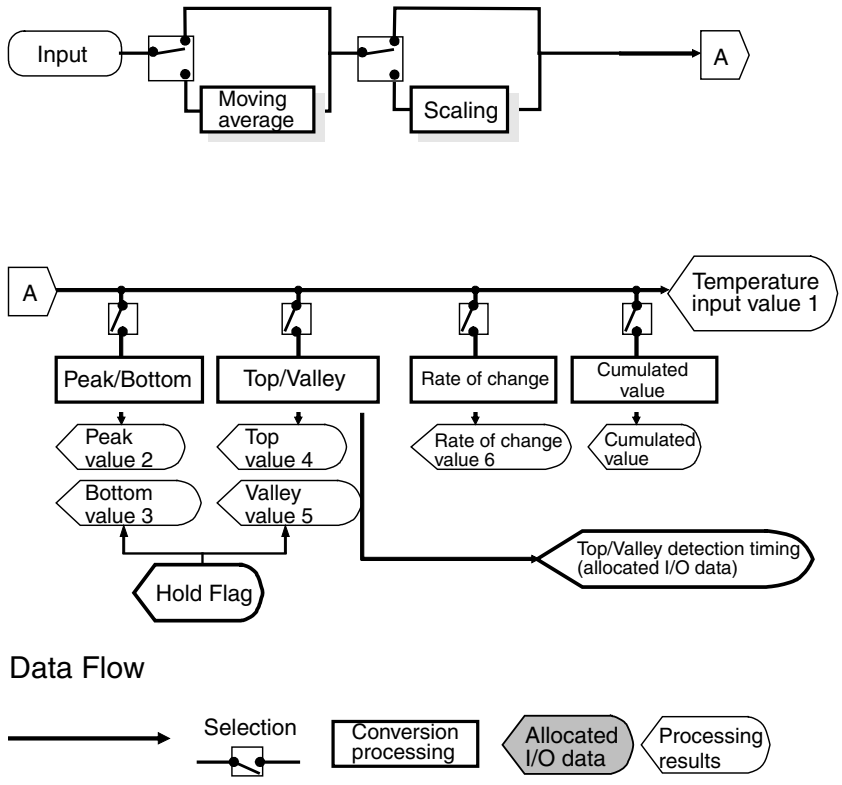

6-1-6 Selecting Data

After performing math operations, select one of the six resulting values to allocate as outputs to the Master, from the temperature input value, peak value, bottom value, top value, valley value, and rate of change. The selected data is referred to as “temperature data” and can be allocated for the Master individually or in combination with status flags. The data is selected using the Setting Tool. Comparison operations with four alarm set values can be performed for temperature data using the Comparator.

Flow of Data in Temperature Input Units

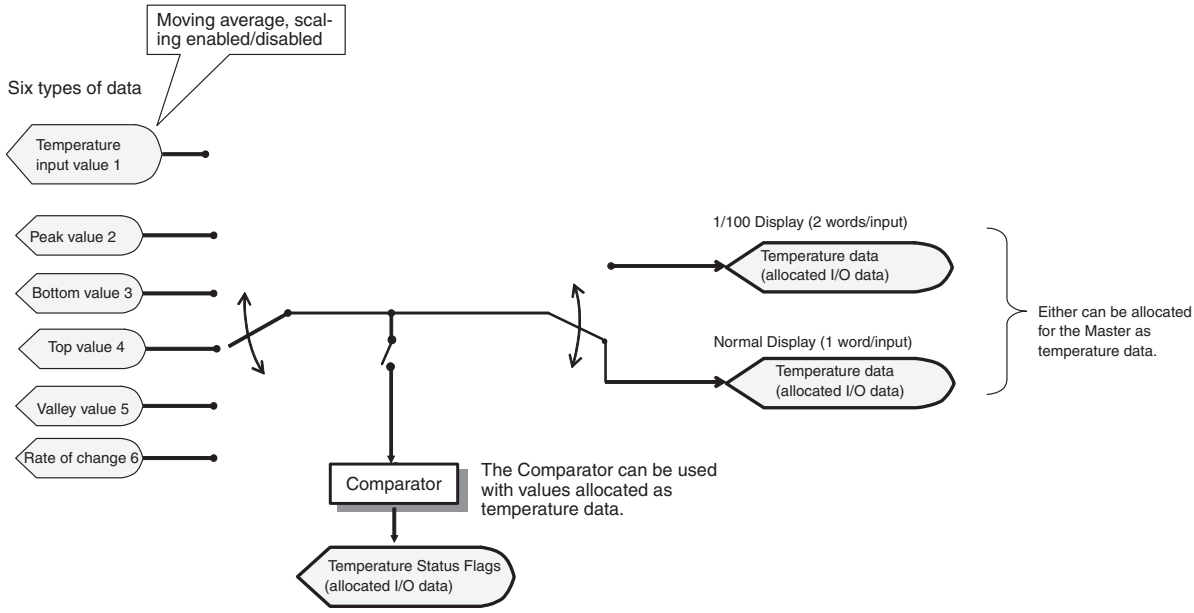

Note By default, the temperature input values are allocated to the Master without any processing.

For inputs 0 and 1, temperature data can be separately selected, as shown in the following diagram.

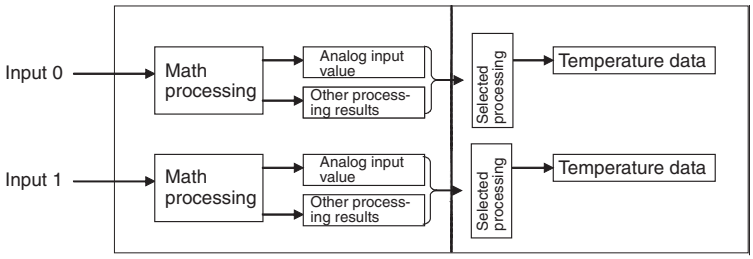

6-1-7 I/O Data

Temperature Input Units

A Temperature Input Unit supports the following six types of input data, and one type of output data. The required data can be allocated for use as I/O. The default input value "Temperature Data Normal Display." No data is output by default.

Input Data

Input data	Details
Temperature Data Normal Display (4 input bytes)	• Used to monitor temperature data. • Select one type of data from temperature input value, peak value, bottom value, top value, valley value, or rate of change. (Default allocation: Temperature input value) **Note** The comparator can be used with temperature data.
Temperature Data 1/100 Display (8 input bytes)	
Top/Valley Detection Timing Flags (2 input bytes)	Top/Valley Detection Timing Flags are allocated in one word. These flags are allocated together with the top value or valley value and are used to time reading the values held in the Master.

Input data	Details
Temperature Status Flags (2 input bytes)	Used to allocate the bits for the Comparator Result Flags, Top/Valley Detection Timing Flags, and Off-wire Detection Flags. The function of each bit is as follows: • Comparator Result Flags Allow control of the judgement results only, without allocating temperature values • Top/Valley Detection Timing Flags Used to time reading the values held as the top and valley values when both the top and value values are allocated at the same time. • Off-wire Detection Flags Disconnections can be detected even when the temperature values are not allocated.
Temperature Data Normal Display + Top/Valley Detection Timing Flags (6 input bytes)	Allocation of the Temperature Data followed by the Top/Valley Detection Timing Flags.
Temperature Data 1/100 Display + Top/Valley Detection Timing Flags (10 input bytes)	

Output Data

Output data	Details
Hold Flags (1 output byte)	Used with each of the hold functions (peak, bottom, top, and valley) to control the execution timing of hold functions from the Master.

6-2 Status Areas

A Temperature Input Unit has two internal Status Areas. Bits are set with respect to thresholds set by the user for each function. When any bit turns ON in one of these Status Areas, the relevant Communications Unit Status Flag turns ON. The Master Unit is notified of the status of Communications Unit Status Flags. Information in I/O Unit Status Areas can be read using the Setting Tool.

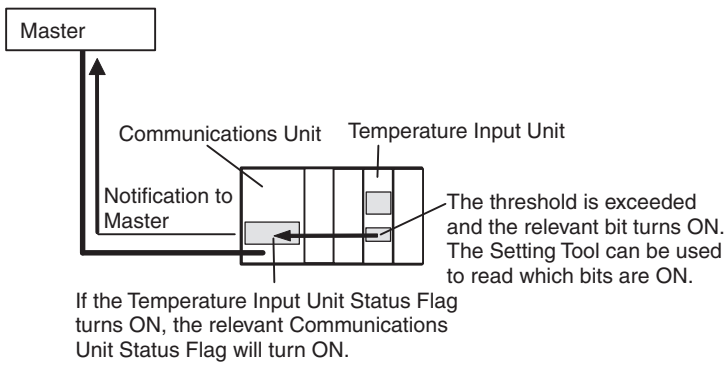

GRT1-TS2□

Warning Status Area

A Temperature Input Unit's Warning Status Area is configured of the following 16 bits. The Warning Status Area provides notification of minor errors in the Unit.

Bit	Contents	Description
0	Reserved.	---
1	Reserved.	---
2	Reserved.	---
3	Unit Maintenance Flag OFF: Normal; ON: Error (Over threshold or 87672 hours)	Monitors the power-ON time set as the threshold for the Unit conduction time monitoring function. Also monitors whether 87672 hours (10 years) have elapsed.

Bit	Contents	Description
4	Reserved.	---
5	Reserved.	---
6	Reserved.	---
7	Reserved.	---
8	Temperature Input Warning Flag OFF: Within range (below monitoring set value) ON: Out of range (at or above monitoring set value)	Turns ON when the temperature data exceeds the range that can be displayed or the monitoring value set for the comparator function.
9	Cumulative Counter Flag OFF: Within range (below monitoring set value) ON: Out of range (at or above monitoring set value)	Turns ON when the cumulative value exceeds the monitoring set value.
10	Data Comparison between Channels Threshold Flag OFF: Within range (below monitoring set value) ON: Out of range (at or above monitoring set value)	Turns ON when the temperature difference between input channels exceeds the monitoring set value.
11	Temperature Range Total Time Flag OFF: Within range (below monitoring set value) ON: Out of range (at or above monitoring set value)	Turns ON when the present value being counted in the set range exceeds the monitoring set value.
12	Top/Valley Count Flag OFF: Within range (below monitoring set value) ON: Out of range (at or above monitoring set value)	Turns ON when the top or valley count exceeds the monitoring set value.
13	Reserved.	---
14	Reserved.	---
15	Reserved.	---

Alarm Status Area

A Temperature Input Unit's Alarm Status Area is configured of the following 16 bits. The Alarm Status Area provides notification of serious errors in the Unit.

Bit	Contents	Description
0	Reserved.	---
1	EEPROM data error	OFF: Normal; ON: Error
2	Reserved.	---
3	Reserved.	---
4	Reserved.	---
5	Reserved.	---
6	Reserved.	---
7	Reserved.	---

Bit	Contents	Description
8	Off-wire Detection Flag	Turns ON when a sensor is disconnected or a cold junction compensator error occurs. OFF: Normal or the input error detection disabled setting is set to disable detecting input errors. ON: Disconnection or cold junction compensator error
9	Cold junction compensator error (GRT1-TS2T only)	OFF: Normal; ON: Error
10	Reserved.	---
11	Reserved.	---
12	Reserved.	---
13	Reserved.	---
14	Reserved.	---
15	Reserved.	---

6-3 Maintenance Information Window

This section describes the Maintenance Information Window, which can be used to monitor the status of a Temperature Input Unit.

6-3-1 Checking Maintenance Information

There are two ways to check maintenance information. One way is to right-click in the Main Window of the Setting Tool and select ***Maintenance Information***. The other way is to double-click the Unit in the Maintenance Mode Window, click the **I/O Module** Tab, select the desired Unit, and click the **View** Button to display the Maintenance Information Window of the I/O Unit.

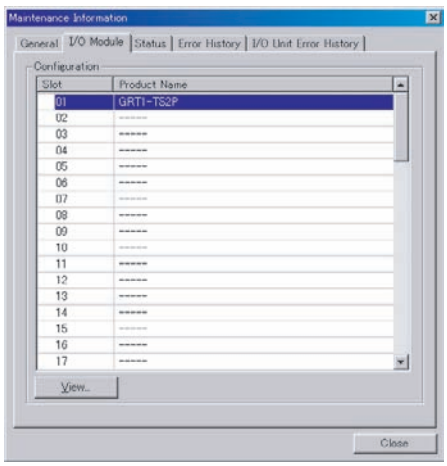

General Tab Page

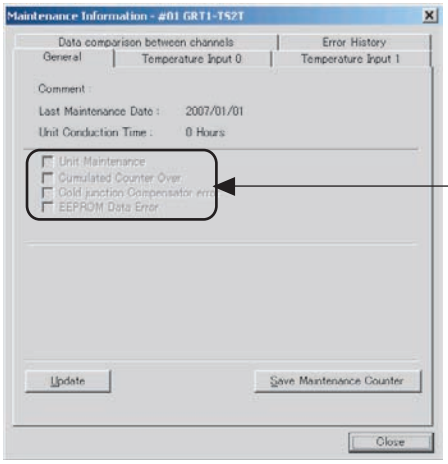

Display Area

Item	Description
Comment	Displays up to 32 characters of text set as the Unit comment.
Last Maintenance Date	Displays the last maintenance date that was set.
Unit Conduction Time	Displays the total time that the Unit has been ON (cumulated power ON time).
Update Button	Click this button to update the maintenance information.
Save Maintenance Counter Button	This button saves the maintenance counter values in the Unit. If this button is used, the saved values will be retained when the power supply is turned OFF and ON again.

Status Check Boxes

Item	Description
Unit Maintenance	Turns ON when the total Unit ON time exceeds the set value. Also turns ON when the Unit ON time exceeds 87672 hours (10 years).
Cumulated Value	Turns ON when the cumulative counter value exceeds the set value for any one input.
EEPROM Data Error	Turns ON when the data contained in EEPROM is invalid.
Cold junction compensator error (GRT1-TS2T only)	Turns ON when there is an error in the cold junction compensator.

Tag Page for Individual Input

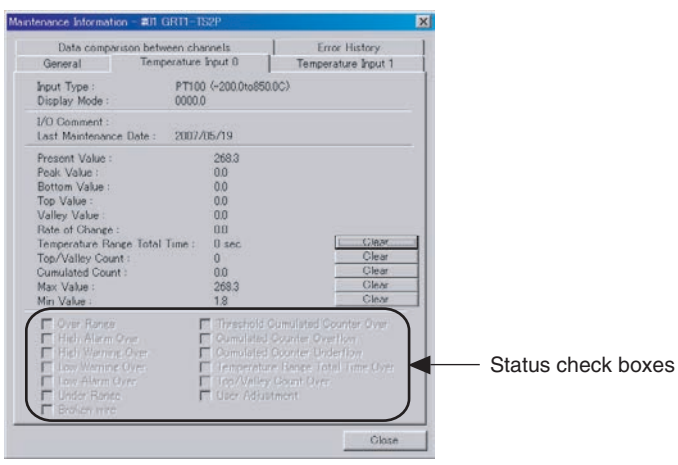

Display Area

Item	Description
Input Type	Shows the present input type.
Display Mode	Indicates the number of digits displayed. 0000: No decimal point. (GRT1-TS2T only) 0000.0: Displays to the 10ths place (0.1). 0000.00: Displays to the 100ths place (0.01).
I/O Comment	Displays up to 32 characters of text as a comment. A separate comment can be set for each input.
Last Maintenance Date	Displays the last maintenance date and time.
Present Value	Displays the present temperature input value. Displays data derived from the temperature input value, including the Peak Value, Bottom Value, Top Value, Valley Value, Rate of Change, Temperature Range Total Time, Top/Valley Count, Cumulated Count, Maximum Value, and Minimum Value. For details, refer to the descriptions of individual functions and setting methods.

Status Check Boxes

Item	Description
Threshold Cumulated Counter Over	ON when the cumulative counter value exceeds the set value.
Cumulated Counter Overflow	ON when there is an overflow in the cumulative counter value.
Cumulated Counter Underflow	ON when there is an underflow in the cumulative counter value.
Over Range/Under Range	ON when the temperature data is above or below the displayable range.
Alarm Over/Warning Over	ON when the analog data is above or below the monitoring set values set in the comparator function.
Broken wire	ON when a wire is broken or disconnected.
Temperature Range Total Time Over	ON when the present value being counted in the set range exceeds the monitoring set value.
Top/Valley Count Over	ON when the top or valley count exceeds the monitoring set value.
User Adjustment	ON when the user-set adjustment function is operating.

Data Comparison between Channels Tab Page

Each comparison number (*No.*) corresponds to the comparison of a pair of inputs.

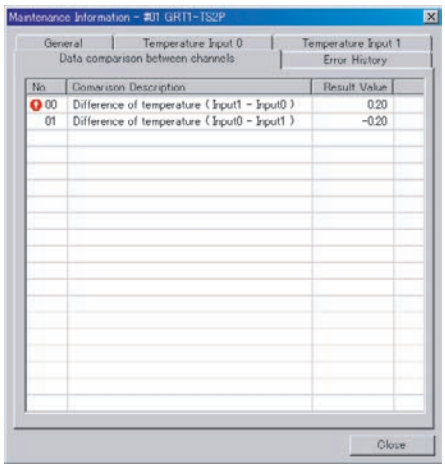

Item	Description
Comparison Description	Displays the inputs used in the error calculation.
Result Value	Displays the calculation results.

Note

(1) When a result value exceeds the monitoring set value, a red alarm icon will be displayed to the left of the comparison number.

(2) When either of the comparison inputs is disconnected (off-wire detected), the result value will be set to 0.00 and a yellow alarm icon will be displayed to the left of the comparison number.

Error History Tab Page

For details on the Error History Tab Page, refer to *4-5-1 Checking Maintenance Information*.

6-4 Temperature Input Units

6-4-1 GRT1-TS2□ Temperature Input Units

General Specifications

Item	Specifications
Model	GRT1-TS2P/-TS2PK/-TS2T
Unit power supply voltage	24 VDC (24 VDC –15% to +10%)
I/O power supply voltage	I/O power supply not required.
Noise immunity	Conforms to IEC 61000-4-4. 2.0 kV (power lines)
Vibration resistance	10 to 60 Hz, 0.7-mm double amplitude, 60 to 150 Hz, 50 m/s^2
Shock resistance	150 m/s^2
Dielectric strength	500 VAC for 1 min. with 1-mA sensing current (between isolated circuits)
Ambient temperature	–10 to 55°C (with no icing or condensation)
Ambient humidity	25% to 85%
Operating environment	No corrosive gases
Storage temperature	–25 to 65°C (with no icing or condensation)
Mounting	35-mm DIN Track mounting

Performance Specifications

GRT1-TS2P/TS2PK

Item	Specifications	
Model	GRT1-TS2P	GRT1-TS2PK
Input	Platinum resistance thermometer	
Number of I/O points	2 inputs (Two input words are allocated in the Master when normal display mode is selected or 4 input words are allocated when 1/100 display mode is selected.)	
Input type	PT100 (–200 to 850°C) or PT100 (–200 to 200°C); switching possible. Using Setting Tool: Can be set separately for each input. Using DIP switch: Both inputs are set together.	PT1000 (–200 to 850°C) or PT1000 (–200 to 200°C); switching possible. Using Setting Tool: Can be set separately for each input. Using DIP switch: Both inputs are set together.
Indication accuracy	–200 to 850°C input range: (±0.3% of indication value or ±0.8°C, whichever is larger) ±1 digit max. –200 to 200°C input range: (±0.3% of indication value or ±0.5°C, whichever is larger) ±1 digit max.	
Conversion cycle	250 ms/2 points	
Temperature conversion data	Binary data two's complement (4-digit hexadecimal when normal display mode is selected or 8-digit hexadecimal when 1/100 display mode is selected)	
Isolation method	Between input and communications lines: Photocoupler isolation Between temperature input signals: Photocoupler isolation	

Note For the GRT1-TS2P, a current of 0.35 mA flows to the platinum resistance thermometer. For the GRT1-TS2PK, a current of 0.035 mA flows to the platinum resistance thermometer.

Note A 2-wire connection has a strong affect on the conductor resistance. When using a 2-wire connection, the conductor resistance *R* directly determines the error.
GRT1-TS2P: The error will be 4°C/Ω for each line. For example, when using a conductor with a resistance *R* of 1 Ω, the total conductor resistance would be 1 Ω × 2 = 2 Ω. Therefore, an error of 4°C/Ω × 2 Ω = 8.0°C would occur.
GRT1-TS2PK: The error will be 0.4°C/Ω for each line. For example, when using a conductor with a resistance *R* of 1 Ω, the total conductor resistance would be 1 Ω × 2 = 2 Ω. Therefore, an error of 0.4°C/Ω × 2 Ω = 0.8°C would occur.

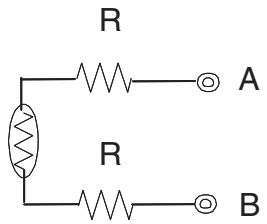

GRT1-TS2T

Items	Specifications
Model	GRT1-TS2T
Input type	Thermocouple
Number of inputs	2 inputs (Two input words are allocated in the Master when normal display mode is selected or 4 words are allocated when 1/100 display mode is selected.)
Input type	R, S, K, J, T, E, B, N, L, U, W, or PL2
Indication accuracy	±2°C ±1 digit max. (See note.) The following are exceptions. **Input type** / **Input accuracy** K, T, or N below –100°C: ±4°C ±1 digit max. U, L, or PL2: ±4°C ±1 digit max. R or S below 200°C: ±4°C ±1 digit max. B below 400°C: Not specified W: ±6°C ±1 digit max. The indication accuracy applies under the following conditions. • The standard mounting direction must be used (i.e., mounting 1). • The terminal block and main block must have the same serial number. • The Units on both sides of and directly next to the GRT1-TS2T must be in the following list of Units supporting an indication accuracy of ±2°C ±1 digit max.
Conversion cycle	250 ms/2 points
Temperature conversion data	Binary data two's complement (Four-digit hexadecimal when normal display mode is selected or 8-digit hexadecimal when 1/100 display mode is selected.)
Isolation method	Between input and communications lines: Photocoupler isolation Between temperature input signals: Photocoupler isolation

Note The indication accuracy depends on the mounting direction and the Units on both sides of and directly next to the GRT1-TS2T. Refer to the following information.

■ Indication Accuracy Dependence on Mounting Direction and Mounted Units

The indication accuracy depends on the direction in which the Temperature Input Unit is mounted and on the Units mounted on both sides and directly next to the GRT1-TS2T. The following indication accuracy applies if the standard mounting direction (i.e., mounting 1) is not used or if the Units mounted are not on the list of Units supporting an indication accuracy of ±2°C ±1 digit max.

±4°C ±1 digit max.

The following are exceptions.

Input type	Input accuracy
K, T, or N below –100°C	±7°C ±1 digit max.
U, L, or PL2	±7°C ±1 digit max.
R or S below 200°C	±7°C ±1 digit max.
B below 400°C	Not specified.
W	±9°C ±1 digit max.

Mounting Direction

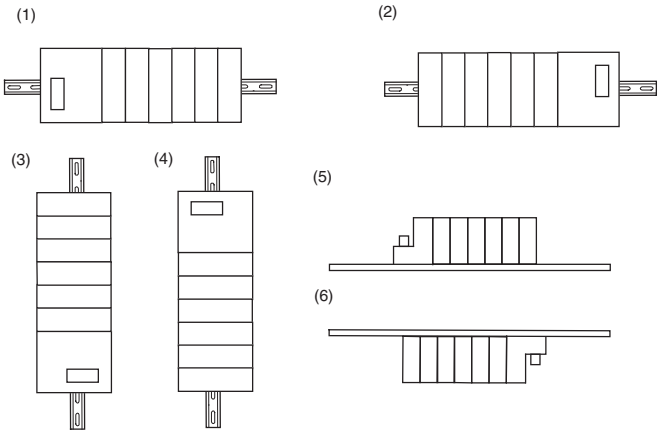

Units Supporting an Indication Accuracy of ±2°C ±1 Digit Max.

Slice I/O Units		
GRT1-ID4 GRT1-ID4-1 GRT1-ID8 GRT1-ID8-1 GRT1-IA4-1 GRT1-IA4-2 GRT1-OD4 GRT1-OD4-1 GRT1-OD4G-1 GRT1-OD8 GRT1-OD8-1 GRT1-OD8G-1 GRT1-ROS2	GRT1-TS2P GRT1-TS2PK GRT1-TS2T GRT1-CT1 GRT1-CT1-1 GRT1-CPL-1	GRT1-PD2 GRT1-PD2G GRT1-PD8 GRT1-PD8-1 GRT1-PC8 GRT1-PC8-1 GRT1-TBR GRT1-TBL GRT1-END
Communications Units		
GRT1-DRT GRT1-PRT		

■ Indication Specifications Dependence on Combination of Terminal Block and Main Block

A cold junction compensator is included in the terminal block of the GRT1-TS2T. If only the main block is replaced, the serial numbers of the terminal block and the main block will no longer match and an extra ±1°C must be added to the indication accuracy. The serial numbers can be found on the side of each block as shown in the following figure.

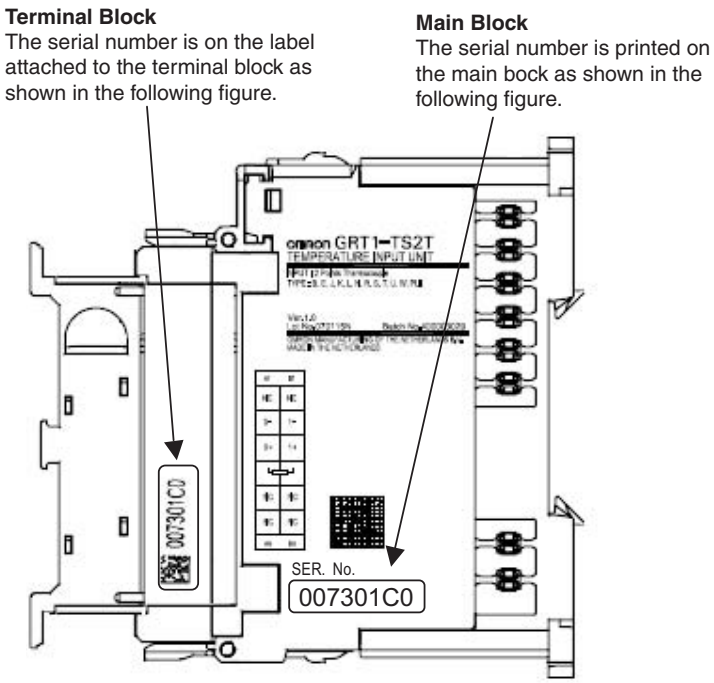

Names and Functions of Parts

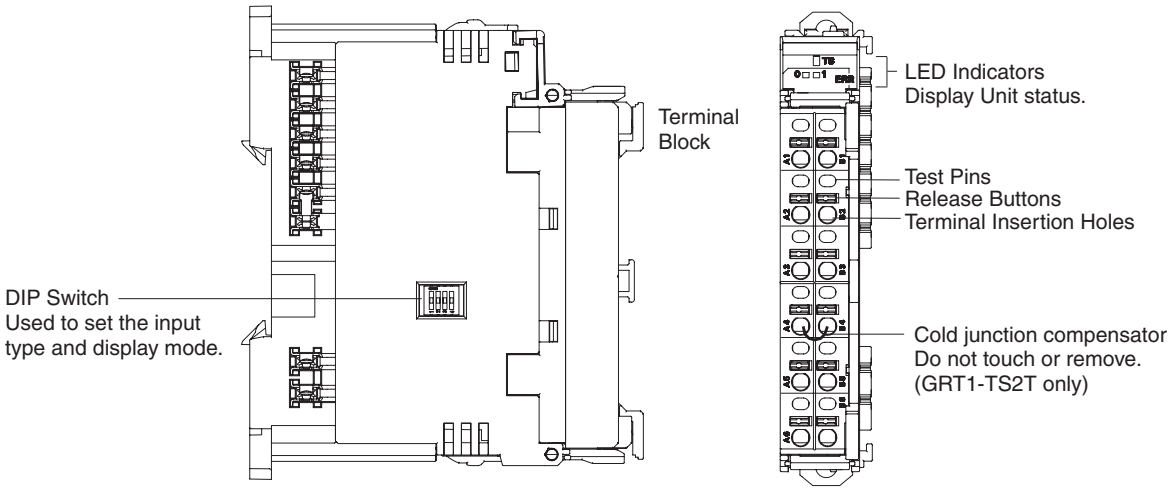

LED Indicators

TS Indicator

The TS indicator shows the status of the Slice I/O Unit itself. Refer to *2-1-3 LED Indicators* for details. (For the GRT1-TS2T only, the indicator will flash red if an error occurs in the cold junction compensator.)

ERR Indicators

The ERR indicators show input errors.

Name	Color	Status	Meaning	
ERR0	Red	Lit	Error	An input error has occurred in input 0. An error has occurred in the cold junction compensator (GRT1-TS2T only).
	---	Not lit	Normal status	There is no input error for input 0.

Name	Color	Status	Meaning	
ERR1	Red	Lit	Error	An input error has occurred in input 1. An error has occurred in the cold junction compensator (GRT1-TS2T only).
	---	Not lit	Normal status	There is no input error for input 1.

Note The ERR indicator will not light or flash if input error detection has been disabled (i.e., if the input error detection disable setting has been set to disable detection).

An input error occurs when the input value exceeds the convertible temperature range. Disconnections and cold junction compensation errors are treated as input errors. Refer to *Convertible Temperature Ranges* on page 175 for more information. For information on LED indicator troubleshooting, refer to *9-2 LED Indicators and Error Processing* for details.

Setting the Input Type

The input type can be set using the DIP switch or the Setting Tool.

Setting with the DIP Switch

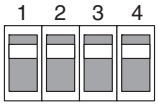

Each pin is set according to the following table.

Pin	Setting	Specifications
1 2	Select the input type (i.e., input range). Make the input type setting using the combinations in the following table.	Default setting: OFF
3	Select a °C or °F display.	OFF: °C conversion ON: °F conversion Both inputs are set together and cannot be set individually. The default setting is OFF. The selection of °C or °F display cannot be set with the Setting Tool.
4	Select the input type setting method. Select either setting with DIP switch or with the Setting Tool.	OFF: Set with the Setting Tool. ON: Set with DIP switch. When the input type is set with the DIP switch, all inputs must be set to the same input type. To set different input types, use the Setting Tool to make the settings. Default setting: OFF

Note If the settings are incorrect, the TS Indicator will flash red and the Unit will not operate. In this case, make the settings again and turn the power supply OFF and ON.

■ **GRT1-TS2P**

SW1	SW2	Input type
OFF	OFF	PT100 (–200 to 850°C)
OFF	ON	PT100 (–200 to 200°C)

■ **GRT1-TS2PK**

SW1	SW2	Input type
OFF	OFF	PT1000 (–200 to 850°C)
OFF	ON	PT1000 (–200 to 200°C)

■ **GRT1-TS2T**

SW1	SW2	Input type
OFF	OFF	R
ON	OFF	S
OFF	ON	K (–200 to 1,300°C)
ON	ON	J (–100 to 850°C)

Note

1. Use the Setting Tool to make the setting if an input type other than those listed above will be used (GRT-TS2T only).
2. Always set Pin 4 to ON if the DIP switch is to be used to set the input type. If this pin is OFF, the DIP switch settings will not be enabled.
3. The DIP switch settings are read when the power is turned ON.
4. If pin 4 is set to ON, you will not be able to set any functions, including the input type, from the Setting Tool. Always set pin 4 to OFF when using the Setting Tool.

Setting Procedure (Example: DeviceNet Configurator)

1,2,3...

1. In the Network Configuration Window for the Slice I/O Terminal, double-click the icon of the Slice I/O Terminal that is to be set. Alternatively, right-click the icon and select ***Parameters - Edit***. The Edit Device Parameters Window will be displayed.
2. Select the Temperature Input Unit to be edited from the *I/O Module* Tab Page.
3. Click the **Edit** Button on the *I/O Module* Tab Page. The Edit Unit Parameters Window will be displayed.
4. Select the tab page for the input where the input type is to be changed.

5. Double-click the *Value* Setting for the *Input Type* on the *Range/Data Allocation* Tab Page and select the desired input type from the pull-down menu.

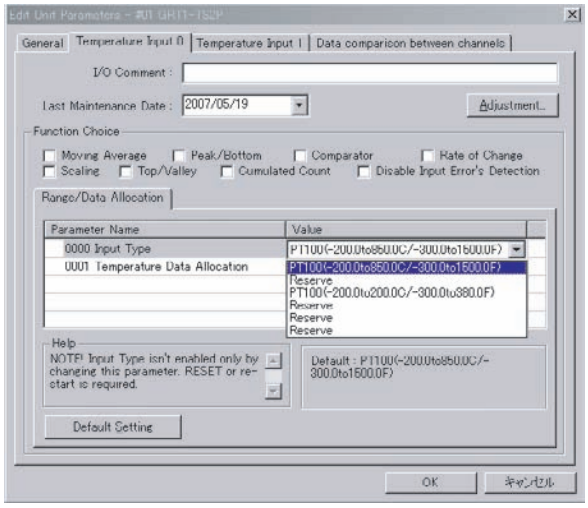

6. Return to the *General* Tab Page, click the **Download** Button, and then click the **Reset** Button to reset the Unit.
7. Click the **OK** Button to exit the window.

Note The Input Type cannot be changed from the Setting Tool if the mode for setting the Input Type with the DIP switch has been specified.

Input Type Range

The input type range can be set with the DIP switch or the Setting Tool.

GRT1-TS2P

Input type	Range in °C	Range in °F
PT100 (–200 to 850°C)	–200.0 to 850.0	–300 to 1,500
PT100 (–200 to 200°C)	–200.0 to 200.0	–300 to 380.0

GRT1-TS2PK

Input type	Range in °C	Range in °F
PT1000 (–200 to 850°C)	–200.0 to 850.0	–300 to 1,500
PT1000 (–200 to 200°C)	–200.0 to 200.0	–300 to 380.0

Note The ranges in the above table are the ranges for which the specified accuracy applies.

GRT1-TS2T

Input type	Range in °C	Range in °F
R	0 to 1,700	0 to 3,000
S	0 to 1,700	0 to 3,000
K (–200 to 1300°C)	–200 to 1,300	–300 to 2,300
K (0.0 to 500.0°C)	0.0 to 500.0	0.0 to 900.0
J (–100 to 850°C)	–100 to 850	–100 to 1,500
J (0.0 to 400.0°C)	0.0 to 400.0	0.0 to 750.0
T	–200.0 to 400.0	–300.0 to 700.0
E	0 to 600	0 to 1,100

Input type	Range in °C	Range in °F
L (–100 to 850°C)	–100 to 850	–100 to 1,500
L (0.0 to 400.0°C)	0.0 to 400.0	0.0 to 750.0
U	–200.0 to 400.0	–300.0 to 700.0
N	–200.0 to 1,300	–300 to 2,300
W	0 to 2,300	0 to 4,100
B	100 to 1,800	300 to 3,200
PL2	0 to 1,300	0 to 2,300

Convertible Temperature Ranges

The convertible data range depends on the selected input type, as shown in the following tables.

GRT1-TS2P

■ **Normal Display Mode**

Type	°C	Display	°F	Display
PT100 (–200 to 850°C)	–220.0 to 870.0	F768 to 21FC	–320.0 to 1520.0	F380 to 3B60
PT100 (–200 to 200°C)	–200.0 to 220.0	F768 to 0898	–320.0 to 400.0	F380 to 0FA0

■ **1/100 Display Mode**

Type	°C	Display	°F	Display
PT100 (–200 to 850°C)	–220.00 to 870.00	FFFFAA10 to 153D8	–320.00 to 1520.00	FFFF8300 to 251C0
PT100 (–200 to 200°C)	–220.00 to 220.00	FFFFAA10 to 55F0	–320.00 to 400.00	FFFF8300 to 9C40

Note

(1) The display data will be clamped at the minimum or maximum value of the display range between the time when the display range is exceeded, and an off-wire condition is detected.

(2) When an off-wire condition is detected, the display data will be 7FFF in normal mode and 7FFF FFFF in 1/100 display mode.

(3) If the Unit is subjected to sudden temperature changes, moisture may condense in the Unit and cause incorrect indications. If there is condensation, remove the Unit from service and keep it at a steady temperature for about 1 hour before using it again.

(4) If the input temperature exceeds the convertible range, an input error will occur and the ERR indicator for that input will turn ON. If the input temperature is higher than the maximum value, an over range error will occur and the temperature data will be clamped at the maximum value. If the input temperature is lower than the minimum value, an under range error will occur and the temperature data will be clamped at the minimum value. If the temperature exceeds the convertible range by a certain value, an off-wire condition (broken or disconnected input wire) will be detected and the temperature data will be set to 7FFF. If the input temperature returns to the convertible range, the off-wire detection function will be reset automatically, the corresponding ERR indicator will go out, and normal conversion data will be stored.

GRT1-TS2PK

■ **Normal Display Mode**

Type	°C	Display	°F	Display
PT1000 (–200 to 850°C)	–220.0 to 870.00	F768 to 21FC	–320.0 to 1520.0	F380 to 3B60
PT1000 (–200 to 200°C)	–220.0 to 220.00	F768 to 0898	–320.0 to 400.0	F380 to 0FA0

■ **1/100 Display Mode**

Type	°C	Display	°F	Display
PT1000 (–200 to 850°C)	–220.00 to 870.00	FFFFAA10 to 153D8	–320.00 to 1520.00	FFFF8300 to 251C0
PT1000 (–200 to 200°C)	–220.00 to 220.00	FFFFAA10 to 55F0	–320.00 to 400.00	FFFF8300 to 9C40

Note

(1) The display data will be clamped at the minimum or maximum value of the display range between the time when the display range is exceeded, and an off-wire condition is detected.

(2) When an off-wire condition is detected, the display data will be 7FFF in normal mode and 7FFF FFFF in 1/100 display mode.

(3) If the Unit is subjected to sudden temperature changes, moisture may condense in the Unit and cause incorrect indications. If there is condensation, remove the Unit from service and keep it at a steady temperature for about 1 hour before using it again.

(4) If the input temperature exceeds the convertible range, an input error will occur and the ERR indicator for that input will turn ON. If the input temperature is higher than the maximum value, an over range error will occur and the temperature data will be clamped at the maximum value. If the input temperature is lower than the minimum value, an under range error will occur and the temperature data will be clamped at the minimum value. If the temperature exceeds the convertible range by a certain value, an off-wire condition (broken or disconnected input wire) will be detected and the temperature data will be set to 7FFF. If the input temperature returns to the convertible range, the off-wire detection function will be reset automatically, the corresponding ERR indicator will go out, and normal conversion data will be stored.

GRT1-TS2T

■ **Normal Display Mode**

Type	°C	Display	°F	Display
R	–20 to 1,720	FFEC to 06B8	–20 to 3,020	FFEC to 0BCC
S	–20 to 1,720	FFEC to 06B8	–20 to 3,020	FFEC to 0BCC
K (–200 to 1300°C)	–220 to 1,320	FF24 to 0528	–320 to 2,320	FEC0 to 0910
K (0.0 to 500.0°C)	–20.0 to 520.0	FF38 to 1450	–20.0 to 920.0	FF38 to 23F0
J (–100 to 850°C)	–120 to 870	FF88 to 0366	–120 to 1,520	FF88 to 05F0
J (0.0 to 400.0°C)	–20.0 to 420.0	FF38 to 1068	–20.0 to 770.0	FF38 to 1E14
T	–220.0 to 420.0	F768 to 1068	–320.0 to 720.0	F380 to 1C20
E	–20 to 620	FFEC to 026C	–20 to 1,120	FFEC to 0460
L (–100 to 850°C)	–120 to 870	FF88 to 0366	–120 to 1,520	FF88 to 05F0
L (0.0 to 400.0°C)	–20.0 to 420.0	FF38 to 1068	–20.0 to 770.0	FF38 to 1E14
U	–220.0 to 420.0	F768 to 1068	–320.0 to 720.0	F380 to 1C20
N	–220 to 1,320	FF24 to 0528	–320 to 2,320	FEC0 to 0910

Type	°C	Display	°F	Display
W	–20 to 2,320	FFEC to 0910	–20 to 4,120	FFEC to 1018
B	80 to 1,820	0050 to 071C	280 to 3,220	0118 to 0C94
PL2	–20 to 1,320	FFEC to 0528	–20 to 2,320	FFEC to 0910

■ **1/100 Display Mode**

Type	°C	Display	°F	Display
R	–20.00 to 1,720.00	FFFFF830 to 29FE0	–20.00 to 3,020.00	FFFFF830 to 49BB0
S	–20.00 to 1,720.00	FFFFF830 to 29FE0	–20.00 to 3,020.00	FFFFF830 to 49BB0
K (–200 to 1300°C)	–220.00 to 1,320.00	FFFFAA10 to 203A0	–320.00 to 2,320.00	FFFF8300 to 38A40
K (0.0 to 500.0°C)	–20.00 to 520.00	FFFFF830 to CB20	–20.00 to 920.00	FFFFF830 to 16760
J (–100 to 850°C)	–120.00 to 870.00	FFFFFD120 to 153D8	–120.00 to 1,520.00	FFFFFD120 to 251C0
J (0.0 to 400.0°C)	–20.00 to 420.00	FFFFF830 to A410	–20.00 to 770.00	FFFFF830 to 12CC8
T	–220.00 to 420.00	FFFFAA10 to A410	–320.00 to 720.00	FFFF8300 to 11940
E	–20.00 to 620.00	FFFFF830 to F230	–20.00 to 1,120.00	FFFFF830 to 1B580
L (–100 to 850°C)	–120.00 to 870.00	FFFFFD120 to 153D8	–120.00 to 1,520.00	FFFFFD120 to 251C0
L (0.0 to 400.0°C)	–20.00 to 420.00	FFFFF830 to A410	–20.00 to 770.00	FFFFF830 to 12CC8
U	–220.00 to 420.00	FFFFAA10 to A410	–320.00 to 720.00	FFFF8300 to 11940
N	–220.00 to 1,320.00	FFFFAA10 to 203A0	–320.00 to 2,320.00	38A40 to 38A40
W	–20.00 to 2,320.00	FFFFF830 to 38A40	–20.00 to 4,120.00	FFFFF830 to 64960
B	80.00 to 1,820.00	1F40 to 2C6F0	280.00 to 3,220.00	6D60 to 4E9D0
PL2	–20.00 to 1,320.00	FFFFF830 to 203A0	–20.00 to 2,320.00	FFFFF830 to 38A40

Note

(1) The display data will be clamped at the minimum or maximum value of the display range between the time when the display range is exceeded, and an off-wire condition is detected.

(2) When an off-wire condition is detected, the display data will be 7FFF in normal mode and 7FFF FFFF in 1/100 display mode.

(3) If the Unit is subjected to sudden temperature changes, moisture may condense in the Unit and cause incorrect indications. If there is condensation, remove the Unit from service and keep it at a steady temperature for about 1 hour before using it again.

(4) If the input temperature exceeds the convertible range, an input error will occur and the ERR indicator for that input will turn ON. If the input temperature is higher than the maximum value, an over range error will occur and the temperature data will be clamped at the maximum value. If the input temperature is lower than the minimum value, an under range error will occur and the temperature data will be clamped at the minimum value. If the temperature exceeds the convertible range by a certain value, an off-wire condition (broken or disconnected input wire) will be detected

and the temperature data will be set to 7FFF. If the input temperature returns to the convertible range, the off-wire detection function will be reset automatically, the corresponding ERR indicator will go out, and normal conversion data will be stored.

Internal Circuits

GRT1-TS2P/TS2PK

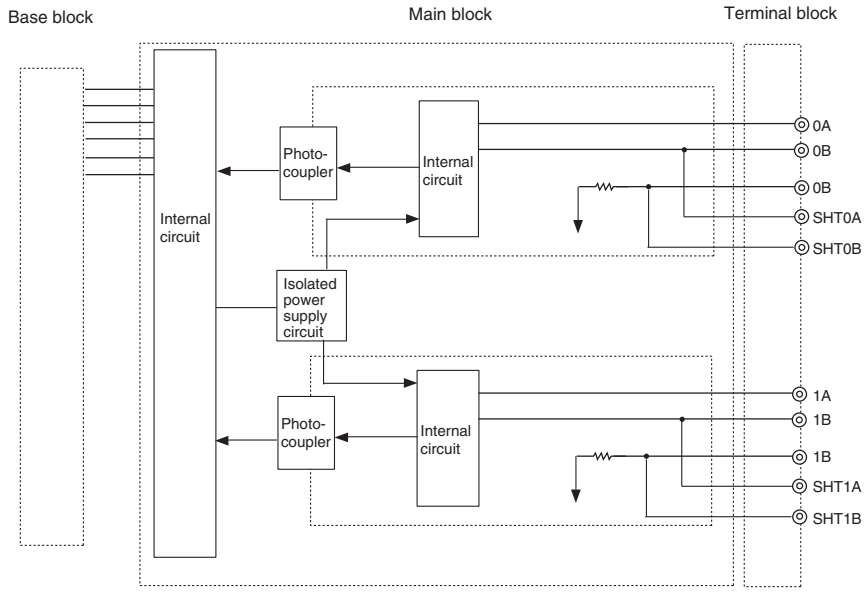

GRT1-TS2T

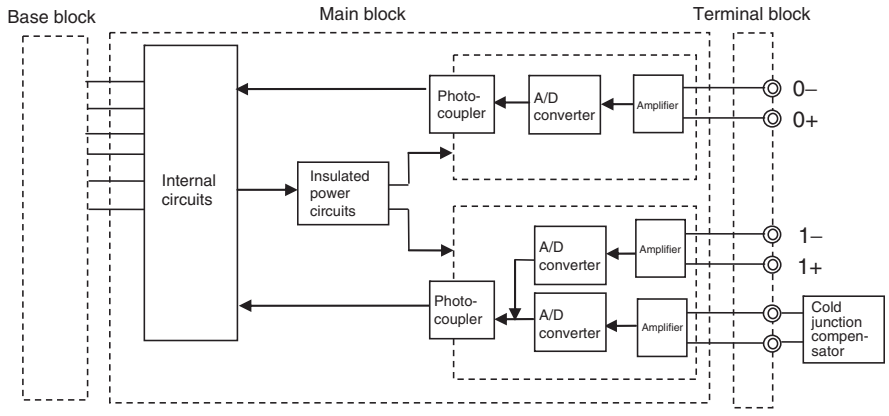

Terminal Arrangement and Wiring

GRT1-TS2P/TS2PK

When using a 2-wire sensor, short-circuit the SHT terminals for that input.

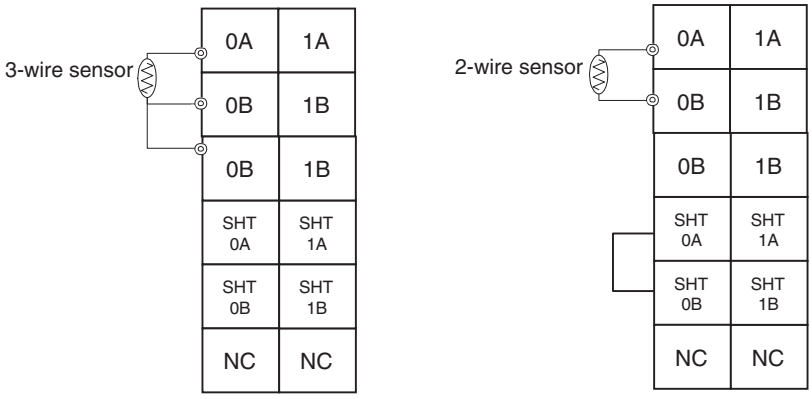

Note If a 2-wire sensor is wired as shown below, the error in the accuracy will be much greater when compared to the wiring method in the above figure. Wire according to the above figure whenever possible.

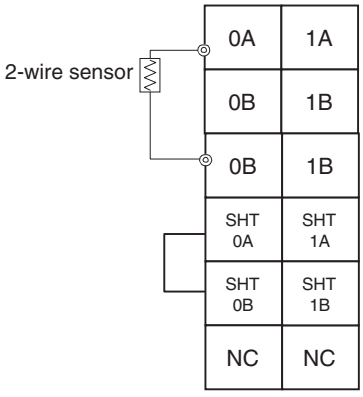

GRT1-TS2T

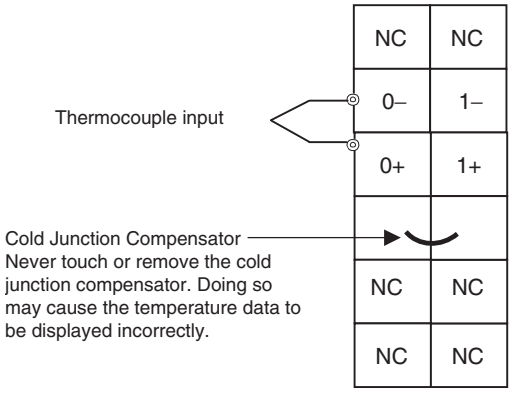

Note If an input is not being used, an input error will occur and an over range error and off-wire condition will be detected. Proceed in one of the following ways.

- Wire to unused terminals.
- Set a parameter with the Setting Tool so that input errors will not be detected. (Refer to *Disabling Input Error Detection* on page 207.)

If unused inputs are left disconnected, the Temperature Input Warning Flag in the Warning Status Area and the Off-wire Detection Flag in the Alarm Status will turn ON. If the Temperature Status Flag is used, the Off-wire Detection Flag will turn ON. In addition, the ERR indicator will light. Here we will introduce the method for connecting to the unused terminals.

- GRT1-TS2P: 50 to 150 Ω
- GRT1-TS2PK: 500 to 1,500 Ω

Do not set a B-type thermocouple for the GRT1-TS2T. An input error will be detected if a B-type thermocouple is connected.

GRT1-TS2P/TS2PK

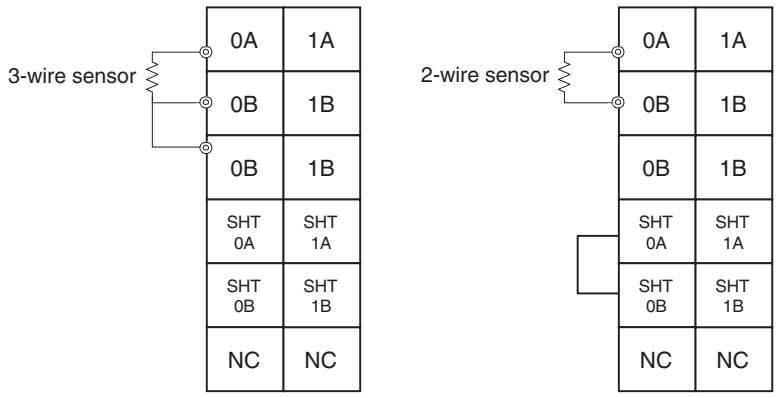

GRT1-TS2T

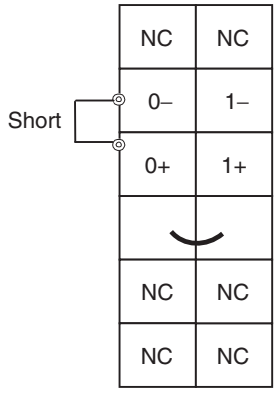

6-4-2 Temperature Input Unit Display Modes

Normal Display Mode (Default Setting)

The input temperature data is converted to 4-digit hexadecimal digital data and transmitted to the Master. If the conversion data is negative, the negative value is expressed as the two's complement.

Two words are allocated in the Master, as shown in the following diagram. If the input type's data has one decimal place, the value transmitted to the Master is 10 times the actual value. (The decimal point is omitted.)

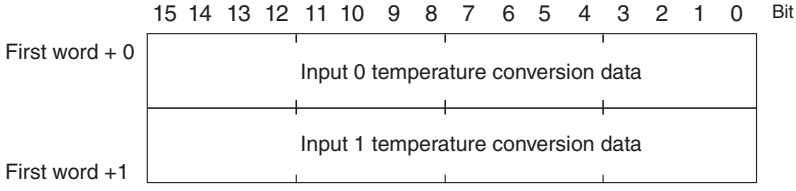

Example 1: 100.0°C: 03E8 hex

Example 2: 350.0°C: 0DAC hex

1/100 Display Mode

The input temperature data for all input types is transmitted to the Master as data with precision to the 100ths (0.01) digits. The temperature data is multiplied by 100 and converted to 8-digit hexadecimal digital data (long binary values). If the conversion data is negative, the negative value is expressed as the two's complement. Four words are allocated in the Master for the two inputs, as shown in the following diagram.

	15 14 13 12 11 10 9 8 7 6 5 4 3 2 1 0 Bit
First word + 0	Input 0 temperature conversion data (rightmost bytes)
First word + 1	Input 0 temperature conversion data (leftmost bytes)
First word + 2	Input 1 temperature conversion data (rightmost bytes)
First word + 3	Input 1 temperature conversion data (leftmost bytes)

Example 1: 850.00°C

00014C08 hex (Rightmost data = 4C08 hex, Leftmost data = 0001 hex)

Example 2: –200.00°C

FFFFB1E0 hex (Rightmost data = B1E0 hex, Leftmost data = FFFF hex)

Setting the 1/100 Display Mode

The 1/100 Display Mode is set from the network Setting Tool. Setting cannot be done with the DIP switch.

1. Turn ON the Master and Slave power supplies. At this point, the 1/100 Display Mode will not be enabled.
2. On the Setting Tool, double-click the icon of the Unit to be set and open the Edit Device Parameters Dialog Box.

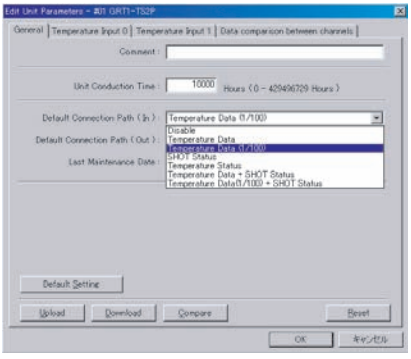

3. Select *Temperature Data (1/100)* from the pull-down list in the *Default Connection Path (In)* Field. Click the **Download** Button and then the **OK** Button to return to the Edit Device Parameters Dialog Box.

4. Select the **General** Tab, and then click the **Reset** Button to reset the device.

5. Finally, click the **OK** Button to finish.

Note In 1/100 Display Mode, the temperature data will be converted to two places below the decimal even though the actual resolution is not 0.01°C (or °F). Consequently, the 0.1°C/ °F or 0.01°C/ °F display digits may jump back and forth between values. Treat any values displayed beyond the specified input resolution as reference data.

Dimensions

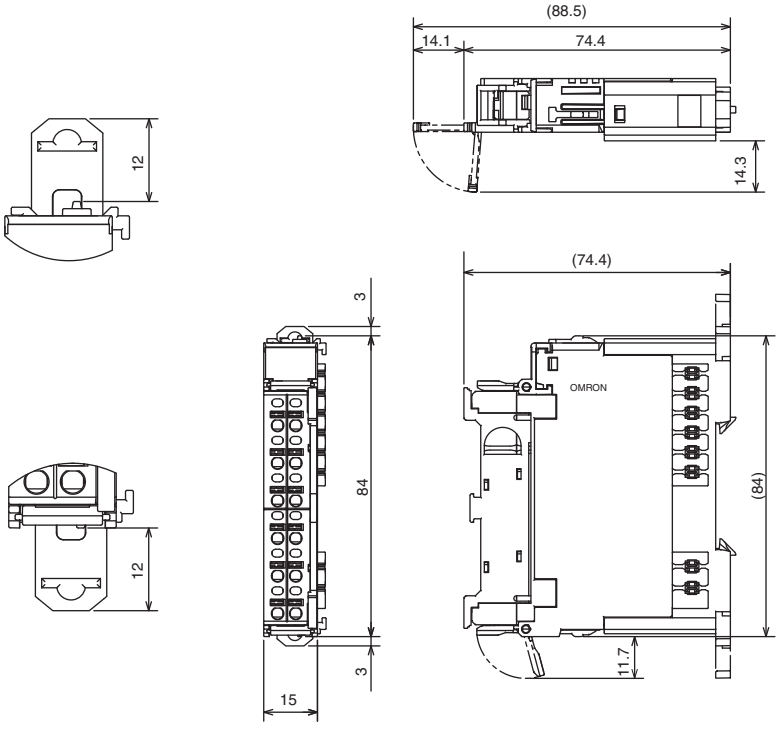

6-4-3 I/O Data Allocation Methods

Either the default settings (i.e., the temperature input values) can be used, or the Setting Tool can be used to allocate Status Flags or other settings other than the temperature input value.

Using the Default Settings

When the Temperature Input Unit's default settings are used, only the temperature input values are selected as I/O data. Two words (four bytes) are allocated in the Master's Input Area, as shown in the following diagram.

15	0
Temperature Input Value for Input 0	
Temperature Input Value for Input 1	

Setting Data Using a Setting Tool

Temperature data can be combined with other data, such as Status Flags, as shown below, and allocated as I/O. The Setting Tool can be used to select the desired data from a pull-down list.

Example: Allocating Temperature Data + Top/Valley Detection Timing Flags

15	8 7	0
Temperature Data for Input 0		
Temperature Data for Input 1		
Top Detection Timing Flag	**Valley Detection Timing Flag**	

The Setting Tool is used as described below to allocate data.

Setting Temperature Data (Example: DeviceNet Configurator)

1,2,3...

1. In the Network Configuration Window for the Slice I/O Terminal, double-click the icon of the Slice I/O Terminal that is to be set. Alternatively, right-click the icon and select ***Parameters - Edit***. The Edit Device Parameters Window will be displayed.
2. Select the Temperature Input Unit to be edited from the *I/O Module* Tab Page.

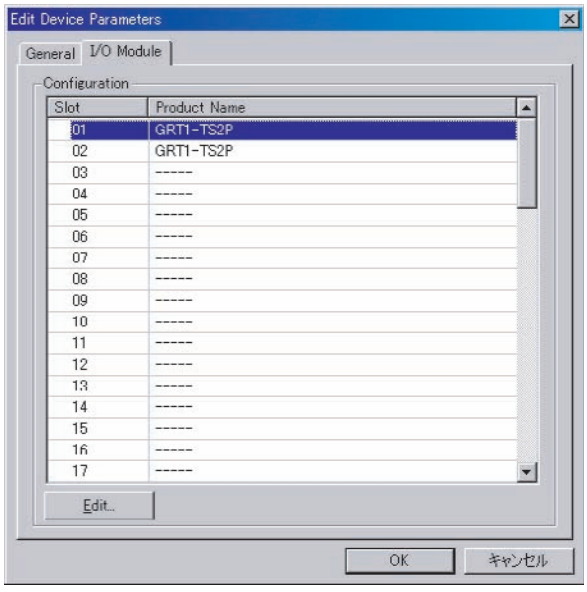

3. Click the **Edit** Button on the *I/O Module* Tab Page. The Edit Unit Parameters Window will be displayed.

4. Click the **General** Tab and select the desired I/O data from the pull-down menu on the *Default Connection Path (In)* Field. In the following example *Temperature Data* is selected.

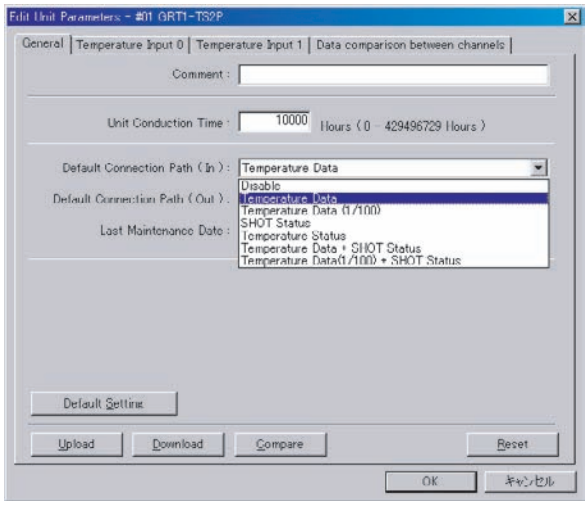

5. Click the **Download** Button to download the setting, and then click the **OK** Button to return to the Edit Device Parameters Window.
6. Click the **General** Tab and, then click the **Reset** Button to reset the device.

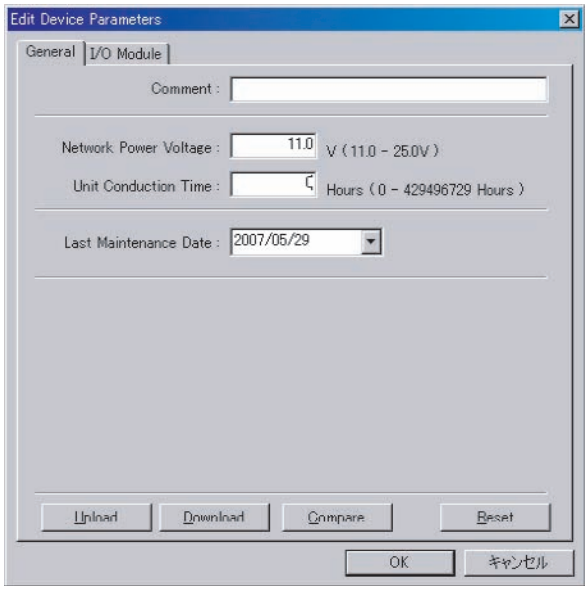

7. Click the **OK** Button to exit.

I/O Data

Temperature Data Normal Display Mode (Temperature Data)

Temperature data is used to monitor temperature input values. The temperature input values are allocated as the default settings, but any one of the following can be allocated: temperature input value, peak value, bottom value, top value, valley value, or rate of change.

Note The comparator function can be used for the data allocated as the Temperature Data.

The data format used for allocating data in the Master is shown below. Data is allocated as two's complements (4 bytes = 2 words).

15	0
Temperature Data for Input 0	
Temperature Data for Input 1	

Temperature Data 1/100 Display Mode (Temperature Data (1/100))

This format is used to allocate temperature data in 1/100 Display Mode. The data format used when allocated in the Master is shown below. The data is given as two's complements (8 bytes = 4 words).

15	0
Temperature Data for Input 0	
Temperature Data for Input 0	
Temperature Data for Input 1	
Temperature Data for Input 1	

Top/Valley Detection Timing Flags (Shot Status)

These flags turn ON for the one-shot time when detecting the top or valley for the top/valley hold function.

These flags are used to time reading the values held as the top and valley values at the Master. The following data format is used when these flags are allocated in the Master (2 bytes = 1 word).

	Bit 7	Bit 6	Bit 5	Bit 4	Bit 3	Bit 2	Bit 1	Bit 0
+0	**0**	**0**	**0**	**0**	**0**	**0**	**V_ST1**	**V_ST0**
+1	**0**	**0**	**0**	**0**	**0**	**0**	**T_ST1**	**T_ST0**

The details of each byte are shown in the following table.

Byte	Abbreviation	Name	Details
+0	V_STx	Valley Detection Timing Flag	Turns ON when a valley is detected by the valley hold function and then turns OFF after the one-shot time has elapsed.
+1	T_STx	Top Detection Timing Flag	Turns ON when a top is detected by the top hold function and then turns OFF after the one-shot time has elapsed.

Note The one-shot time can be changed. For details, refer to the one-shot time settings for the top/valley hold function.

Temperature Status Flags (Temperature Status)

The Temperature Status Flags include allocations for the Comparator Result Flag, the Top/Valley Detection Timing Flags, and the Off-wire Detection Flags. These flags are used for detection and monitoring.

The data format used for each byte when these flags are allocated in the Master is shown below (2 bytes = 1 word).

	Bit 7	Bit 6	Bit 5	Bit 4	Bit 3	Bit 2	Bit 1	Bit 0	
+0	**BW0**	**T_ST0**	**V_ST0**	**HH0**	**H0**	**PS0**	**L0**	**LL0**	**Input 0**
+1	**BW1**	**T_ST1**	**V_ST1**	**HH1**	**H1**	**PS1**	**L1**	**LL1**	**Input 1**

The details for each bit are shown in the following table.

Bit	Abbreviation	Name		Details
0	LLx	Comparator result	Low Low Limit Alarm Flag	Turns ON when the value of data allocated in Temperature Data drops below the Low Low Limit alarm setting.
1	Lx		Low Limit Alarm Flag	Turns ON when the value of data allocated in Temperature Data drops below the Low Limit alarm setting.
2	PSx		Normal Flag (pass signal)	Turns ON when none of the alarms (High High Limit, High Limit, Low Low Limit, and Low Limit) have been output.
3	Hx		High Limit Alarm Flag	Turns ON when the value of data allocated in Temperature Data exceeds the High Limit alarm setting.
4	HHx		High High Limit Alarm Flag	Turns ON when the value of data allocated in Temperature Data exceeds the High High Limit alarm setting.
5	V_STx	Top/valley detection timing	Valley Detection Timing Flag	Used with the valley hold function. Turns ON when a valley is detected, and turns OFF after the one-shot time has lapsed.
6	T_STx		Top Detection Timing Flag	Used with the top hold function. Turns ON when a top is detected, and turns OFF after the one-shot time has lapsed.
7	BWx	Off-wire Detection Flag		Turns ON when a disconnection is detected.

Temperature Data Normal Mode + Top/Valley Detection Timing Flags (Temperature Data + Shot Status)

This data pattern consists of the Temperature Data Normal Display Mode followed by the Top/Valley Detection Timing Flags and is allocated in the Master using the following data format (6 bytes = 3 words).

	Bit 7	Bit 6	Bit 5	Bit 4	Bit 3	Bit 2	Bit 1	Bit 0
+0	Temperature Data for Input 0							
+1								
+2	Temperature Data for Input 1							
+3								
+4	0	0	0	0	0	0	V_ST1	V_ST0
+5	0	0	0	0	0	0	T_ST1	T_ST0

Temperature Data 1/100 Mode + Top/Valley Detection Timing Flags (Temperature Data (1/100) + Shot Status)

This data pattern consists of the Temperature Data 1/100 Display Mode followed by the Top/Valley Detection Timing Flags and is allocated in the Master using the following data format (10 bytes = 5 words).

	Bit 7	Bit 6	Bit 5	Bit 4	Bit 3	Bit 2	Bit 1	Bit 0
+0	Temperature Data for Input 0							
+1								
+2								
+3								
+4	Temperature Data for Input 1							
+5								
+6								
+7								
+8	0	0	0	0	0	0	V_ST1	V_ST0
+9	0	0	0	0	0	0	T_ST1	T_ST0

Hold Flags (Output)

Hold Flags are used with the peak/bottom hold and top/valley hold functions. The Hold Flags are used to control the hold execution timing from the Master and are allocated in the Master using the following data format (2 bytes).

Note A delay may occur between when the Master's power is turned ON until notification of the Hold Flag status is sent to the Unit.

	Bit 7	Bit 6	Bit 5	Bit 4	Bit 3	Bit 2	Bit 1	Bit 0
+0							HD1	HD0
+1								

The details for each bit are shown in the following table.

Bit	Abbreviation	Name	Details
0	HD0	Hold Flag for Input 0	The hold function is performed for Temperature Input 0 while this flag is ON. The hold function stops and the last value is held when the flag goes OFF.
1	HD1	Hold Flag for Input 1	The hold function is performed for Temperature Input 1 while this flag is ON. The hold function stops and the last value is held when the flag goes OFF.

Selecting the Temperature Data

The temperature data can be selected from six types of data (temperature input value, peak value, bottom value, top value, valley value, and rate of change) obtained from math processing. The selected data can be allocated for the Master either individually or in combination with Status Flags.

Use the following method to select the temperature data type.

Selecting the Temperature Data (Example: DeviceNet Configurator)

1,2,3...

1. In the Network Configuration Window for the Slice I/O Terminal to be set, double-click the icon of the Slice I/O Terminal that is to be set. Alternatively, right-click the icon and select ***Parameters - Edit***. The Edit Device Parameters Window will be displayed.
2. Select the Temperature Input Unit to be set from the *I/O Module* Tab Page, and click the **Edit** Button. The Edit Unit Parameters Window will be displayed.

3. Open the tab page for the input for which temperature data is to be selected, and select from the pull-down list the type of data to be allocated as the Temperature Data.

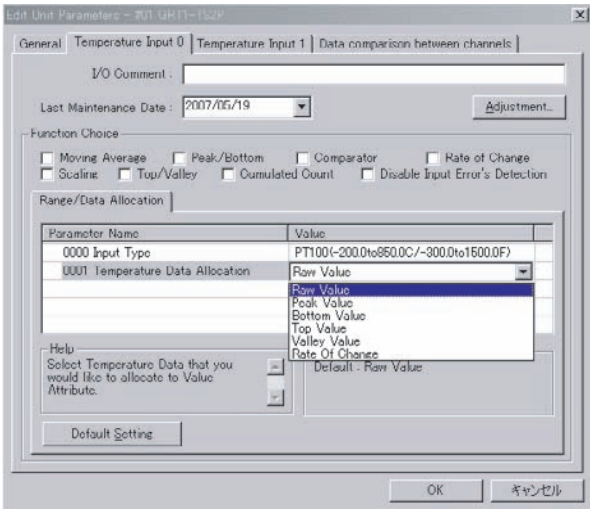

4. Return to the *General* Tab Page, click the **Download** Button, and then click the **Reset** Button to reset the Unit.
5. Click the **OK** Button to exit.

6-4-4 Functions and Settings

Moving Average Processing

This function calculates the average value (moving average) of the previous eight inputs, and uses the resulting value as conversion data. When the input value fluctuates frequently, averaging can be used to produce a stable input value, as shown in the following diagram.

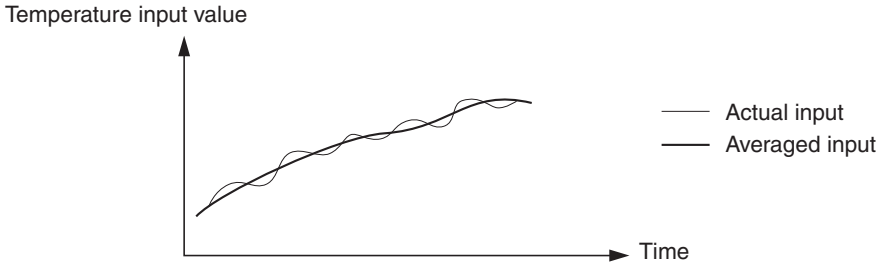

Setting Procedure (Example: DeviceNet Configurator)

1,2,3...

1. In the Network Configuration Window, double-click the icon of the Slice I/O Terminal that is to be set. Alternatively, right-click the icon and select ***Parameters - Edit***. The Edit Device Parameters Window will be displayed.
2. Select the Temperature Input Unit to be edited from the *I/O Module* Tab Page.
3. Click the **Edit** Button on the *I/O Module* Tab Page. The Edit Unit Parameters Window will be displayed.

4. Select the tab page for the input where moving average processing is to be performed, and select the *Moving Average* Check Box in the *Function Choice* Area.

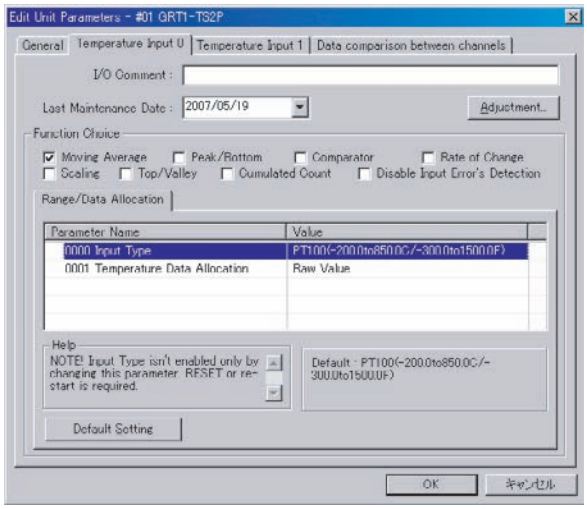

5. Return to the *General* Tab Page, click the **Download** Button, and then click the **Reset** Button to reset the Unit.
6. Click the **OK** Button to exit.

Scaling

Scaling can be used to change the values displayed for the temperature input values to any values required by the user. Scaling eliminates the need for ladder programming in the Master to perform math operations. To scale the temperature input values (i.e., the measured values) to the values required by the user, conversion values between –28,000 and 28,000 are set at 2 points (i.e., 100%, and at 0%) using the Configurator.

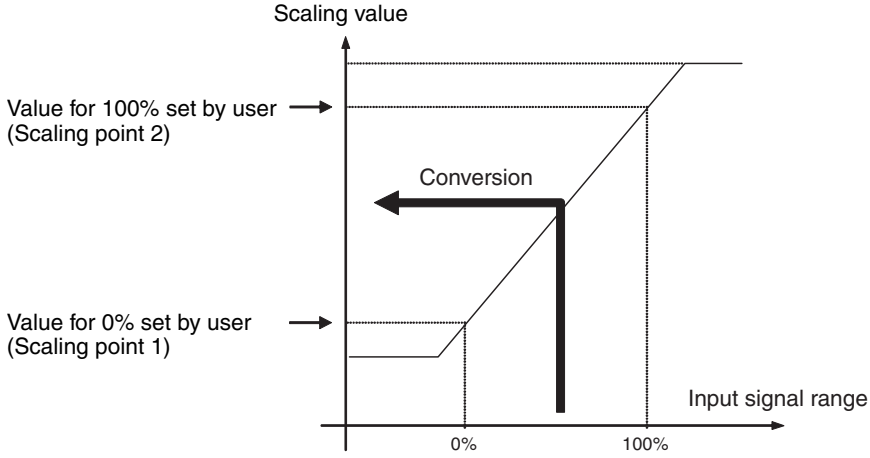

Note

(1) The default values are 0 to 28000.

(2) Reverse scaling, where the 0% scaling value is higher than the 100% scaling value, is also supported.

Offset Compensation

Offset compensation can be used to compensate for error that occurs during scaling. The offset amount is added to the scaled line after scaling, as shown in the following diagram. The offset (error) value can be input between –28,000 to 28,000, but be sure that underflow or overflow does not occur. The

upper limit is 7FFE hex and the lower limit is 8000 hex. (In 1/100 Display Mode the upper limit is 7FFFFFFE hex and the lower limit is 80000000 hex.)

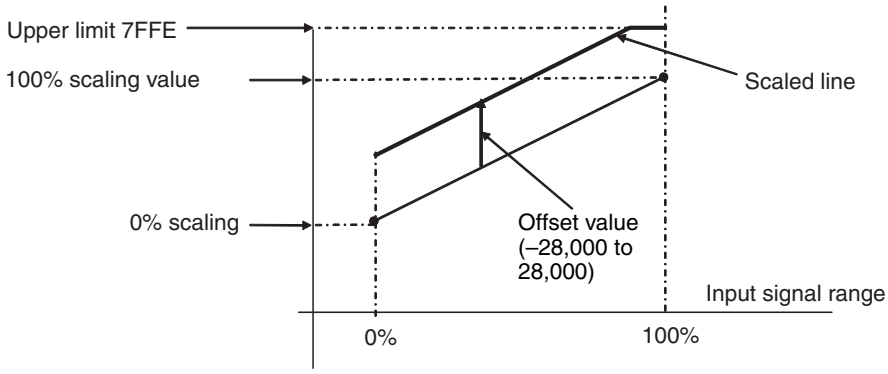

Setting Procedure (Example: DeviceNet Configurator)

1,2,3...

1. In the Network Configuration Window, double-click the icon of the Slice I/O Terminal that is to be set. Alternatively, right-click the icon and select ***Parameters - Edit***. The Edit Device Parameters Window will be displayed.
2. Select the Temperature Input Unit to be edited from the *I/O Module* Tab Page.
3. Click the **Edit** Button on the *I/O Module* Tab Page. The Edit Unit Parameters Window will be displayed.
4. Select the tab page for the input where scaling is to be performed, and select the *Scaling* Check Box in the *Function Choice* Area.

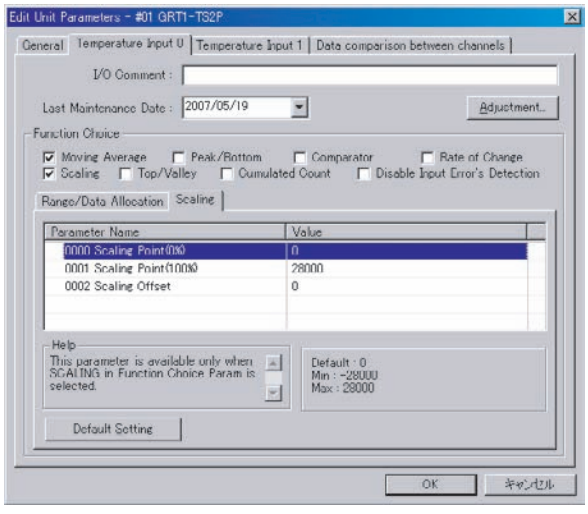

5. Set the scaling point 0% value and scaling point 100% value.

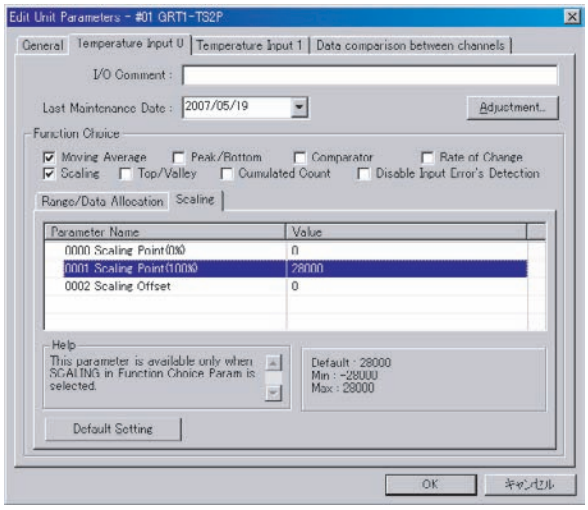

6. When using an offset compensation, enter the offset value into the *Scaling Offset* Field.

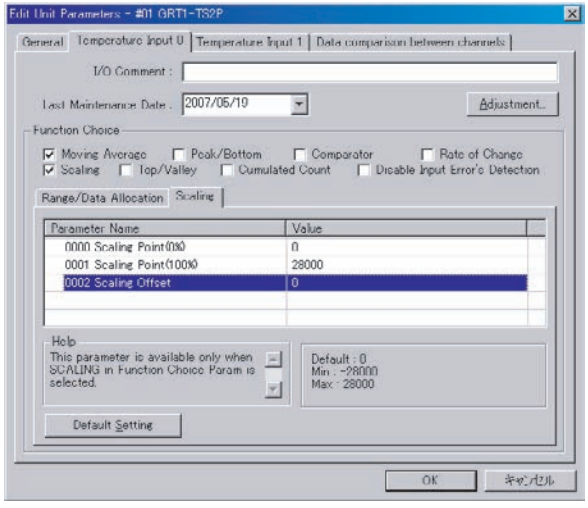

7. Return to the *General* Tab Page, click the **Download** Button, and then click the **Reset** Button to reset the Unit.
8. Click the **OK** Button to exit.

Peak/Bottom Hold

The peak/bottom hold function is used to hold the maximum (peak) value or minimum (bottom) value of the temperature input value. When the Hold Flag (output) allocated in the Output Area turns ON, the hold function starts, searching for the peak or bottom value until the Hold Flag turns OFF. (The peak/bottom value is refreshed when the Hold Flag turns OFF.) The comparator function can be used to compare the peak or bottom values allocated as temperature data. (Refer to details on the comparator function.)

■ **Example of Bottom Hold**

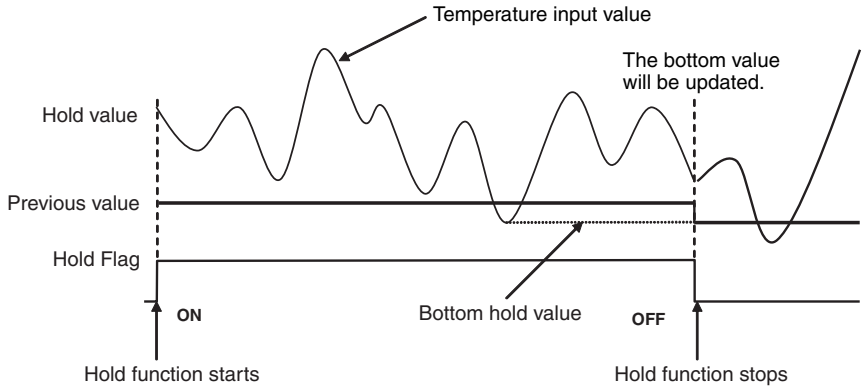

Note A delay in network transmission time will occur from the time the Hold Flag turns ON (or OFF) in the Master's ladder program until notification of the flag's status is actually sent to the Slave. Therefore, even when the Hold Flag is ON, the first temperature data transmitted to the Master when the CPU Unit power is turned ON may be the data from when the Hold Flag was OFF. To collect peak/bottom hold data using the Hold Flag at the Master, configure a ladder program that considers the transmission delay when the Hold Flag is turned ON, then enables the peak/bottom hold values after a fixed time interval.

Setting Procedure (Example: DeviceNet Configurator)

1,2,3...

1. In the Network Configuration Window, double-click the icon of the Slice I/O Terminal that is to be set. Alternatively, right-click the icon and select ***Parameters - Edit***. The Edit Unit Parameters Window will be displayed.
2. Select the Temperature Input Unit to be edited from the *I/O Module* Tab Page.
3. Click the **Edit** Button on the *I/O Module* Tab Page. The Edit Unit Parameters Window will be displayed.
4. Select the tab page for the input where peak/bottom hold is to be set, and select the *Peak/Bottom Hold* Check Box in the *Function Choice* Area.

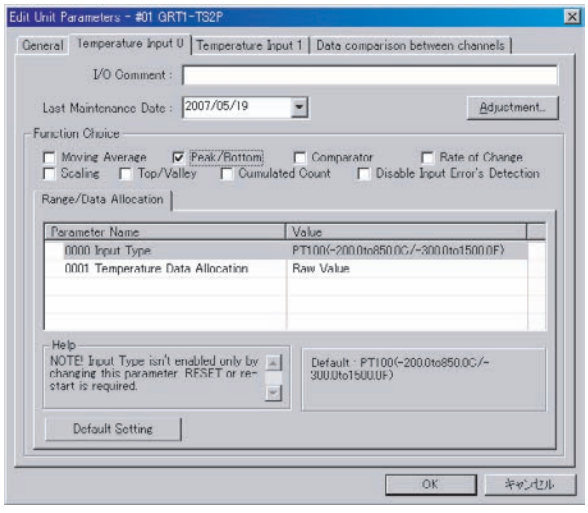

5. To allocate the Hold Flags (output) in the default connection path, click the **General** Tab and select ***Holding Value*** from the pull-down menu in the *Default Connection Path (Out)* Field.

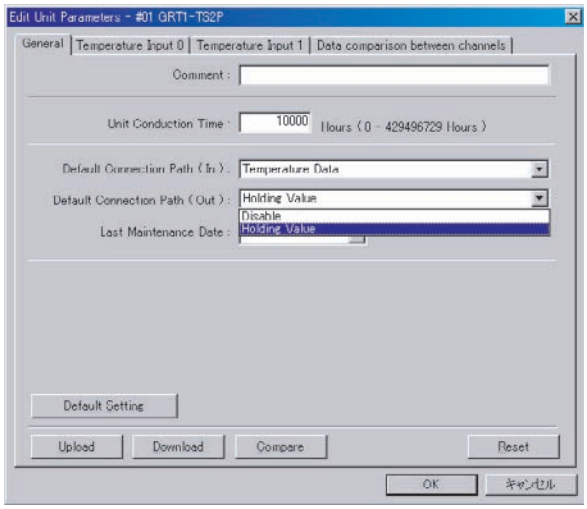

6. Click the **Download** Button to execute the download procedure, and then click the **OK** Button to return to the Edit Device Parameters Edit Device Parameters.
7. Click the **General** Tab and click the **Reset** Button to reset the Device.

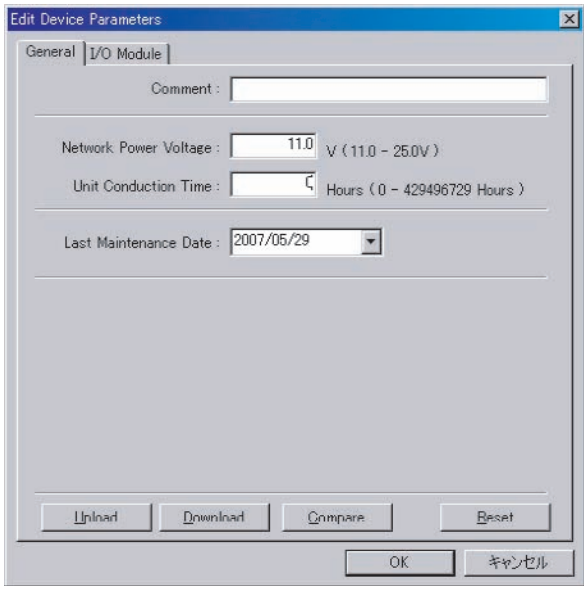

8. Click the **OK** Button to exit.

Top/Valley Hold

Top/valley hold is used to hold the top and valley values of the temperature input value.

Temperature values that fluctuate more than twice the hysteresis value are monitored, and the top or valley values are held. The top or valley value is allocated along with the Top/Valley Detection Timing Flags, which can be used to check the hold timing.

When the Hold Flag (output) allocated in the Output Area turns ON, the hold function starts, refreshing the top or valley value until the Hold Flag turns OFF. (The last value is held when the Hold Flag turns OFF, but the next time the Hold Flag turns ON, the hold value is initialized as soon as a top or valley

occurs.) The comparator can be used to compare the top or valley value allocated as temperature data. (Refer to details on the comparator function.)

■ **Example of Valley Hold**

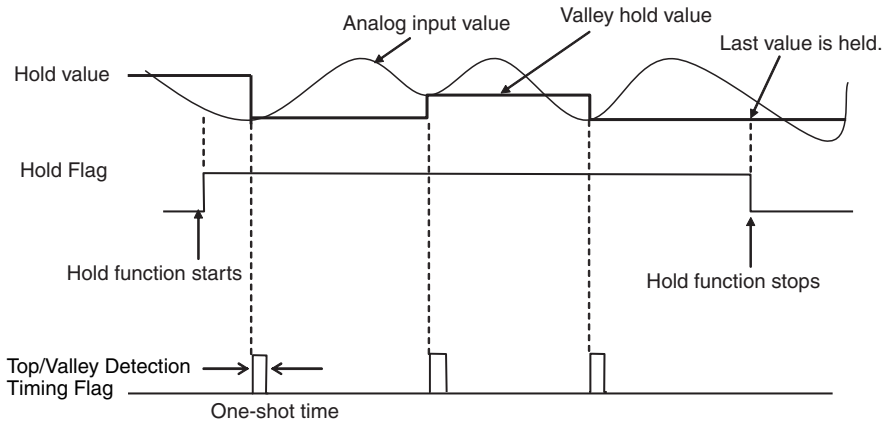

Note

1. A delay in network transmission time will occur from the time the Hold Flag turns ON (or OFF) in the Master's ladder program until notification of the flag's status is actually sent to the Slave. Therefore, even when the Hold Flag is ON, the first temperature data transmitted to the Master when the CPU Unit power is turned ON may be the data from when the Hold Flag was OFF. To collect top/valley hold data using the Hold Flag at the Master, configure a ladder program which considers the transmission delay time when the Hold Flag is turned ON, then enables the top/valley hold values after a fixed time interval.
2. The time that the Top/Valley Detection Timing Flags are ON can be adjusted by setting the one-shot time. Use the Configurator to set the one-shot time (the setting range is 1 to 65535 ms).
3. If the Hold Flag turns OFF during the time the Top/Valley Detection Timing Flag is set to be ON, both flags will turn OFF simultaneously.

Setting Procedure (Example: DeviceNet Configurator)

1,2,3...

1. In the Network Configuration Window, double-click the icon of the Slice I/O Terminal that is to be set. Alternatively, right-click the icon and select ***Parameters - Edit***. The Edit Device Parameters Window will be displayed.
2. Select the Temperature Input Unit to be edited from the *I/O Module* Tab Page.
3. Click the **Edit** Button on the *I/O Module* Tab Page. The Edit Unit Parameters Window will be displayed.

4. Select the tab page for the input where top/valley hold is to be set, and select the *Top/Valley Hold* Check Box in the *Function Choice* Area.

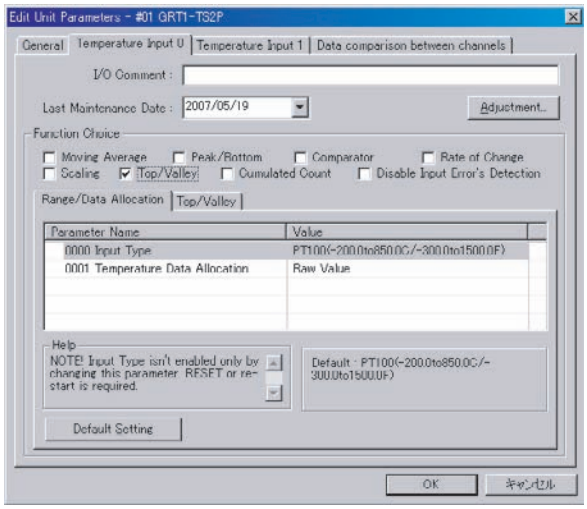

5. To allocate the Hold Flag (output) in the default connection path, click the **General** Tab, and select ***Holding Value*** from the pull-down menu in the *Default Connection Path (Out)* Field.

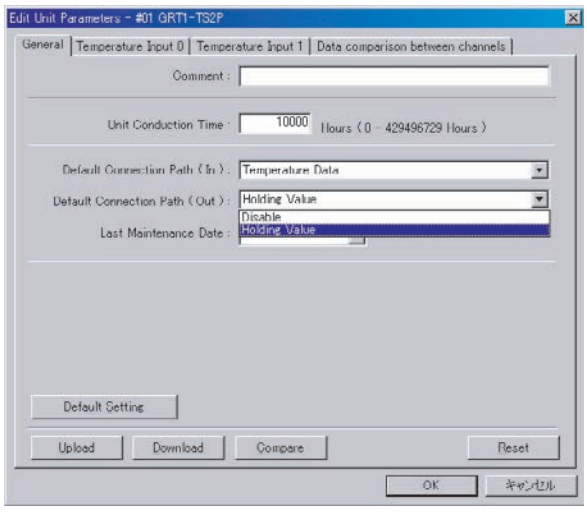

6. Click the **Download** Button to execute the download procedure, and then click the **OK** Button to return to the Edit Device Parameters Window.
7. Return to the *General* Tab Page, click the **Download** Button, and then click the **Reset** Button to reset the Unit.
8. Click the **OK** Button to exit.

Hysteresis Setting

The hysteresis value can be set using the Configurator to prevent detection of top or valley values that occur due to minor fluctuations in the temperature input value. This will cause the start of data holding to be delayed after the actual top or valley value occurs, as shown in the following diagram.

■ **Timing for Setting Data**

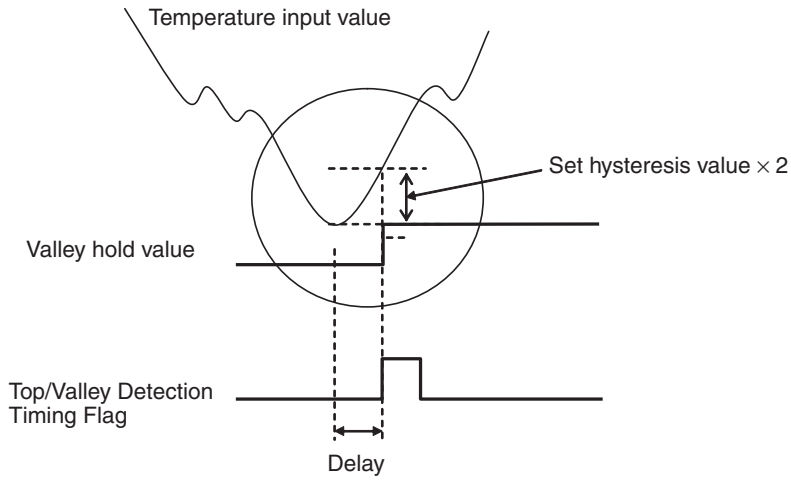

■ **Setting Hysteresis (Example: DeviceNet Configurator)**

1,2,3...

1. Input the value for hysteresis in the *Hysteresis* Field in the **Top/Valley** Tab in the *Function Choice* Area.

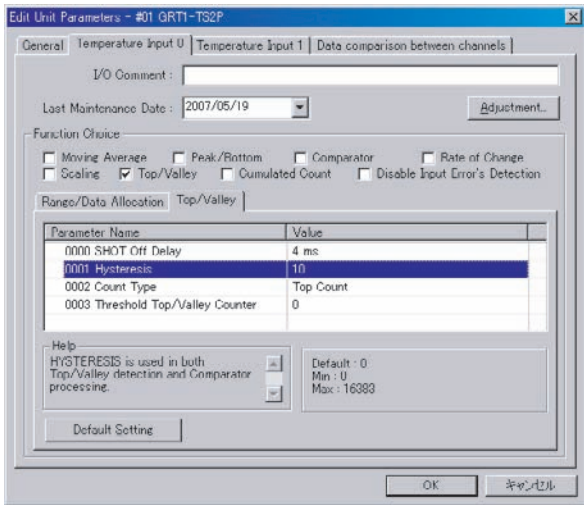

2. Return to the *General* Tab Page, click the **Download** Button, and then click the **Reset** Button to reset the Unit.
3. Click the **OK** Button to exit.

Note The hysteresis value set for the top/valley hold function is also used by the comparator function.

One-shot Time Setting

1,2,3...

1. Input the desired value in the *SHOT Off Delay* Field of the *Top/Valley* Tab Page in the *Function Choice* Area.

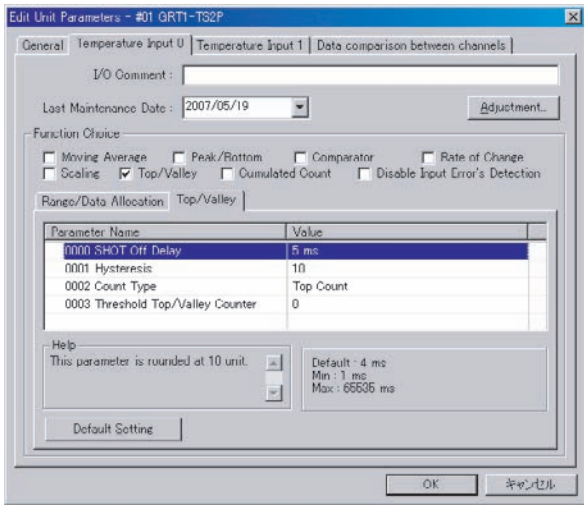

2. Return to the *General* Tab Page, click the **Download** Button, and then click the **Reset** Button to reset the Unit.
3. Click the **OK** Button to exit.

Top/Valley Counter Function

This function counts the number of temperature tops or valleys in devices or applications that have repetitive temperature rises (or drops). A threshold value can be set for the counter to indicate when preventative maintenance is required for the Unit or sensors.

The Over Threshold status can be read in the Maintenance Information Window or by using an explicit message.

Valley Counter Operation

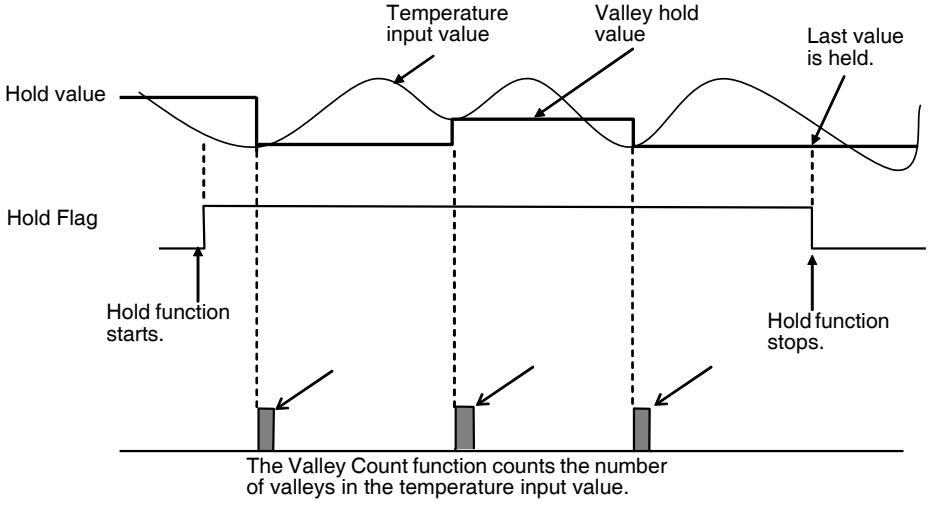

Setting Procedure (Example: DeviceNet Configurator)

1,2,3...

1. In the Network Configuration Window, double-click the icon of the Slice I/O Terminal that is to be set. Alternatively, right-click the icon and select ***Parameters - Edit***. The Edit Device Parameters Window will be displayed.
2. Select the Temperature Input Unit to be edited from the *I/O Module* Tab Page.

3. Click the **Edit** Button on the *I/O Module* Tab Page. The Edit Unit Parameters Window will be displayed.
4. Select the tab page for the input where top/valley counter is to be set, and select the *Top/Valley* Option in the *Function Choice* Area.
5. Select the **Top/Valley** Tab and select either ***Top Count*** or ***Valley Count*** from the pull-down menu on the *Count Type* Field.

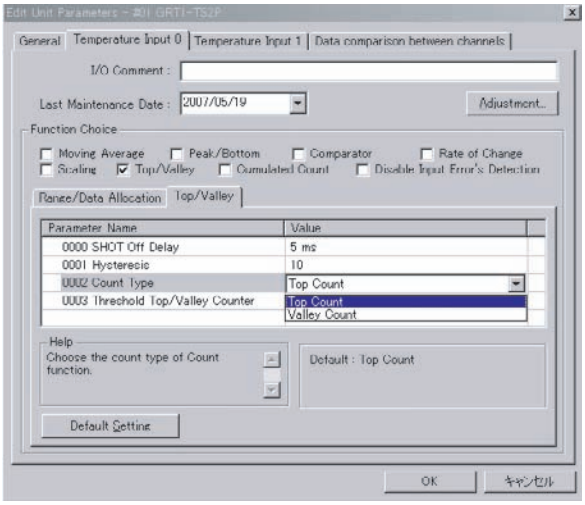

6. A threshold count value can be set in the *Threshold Top/Valley Counter* Field.

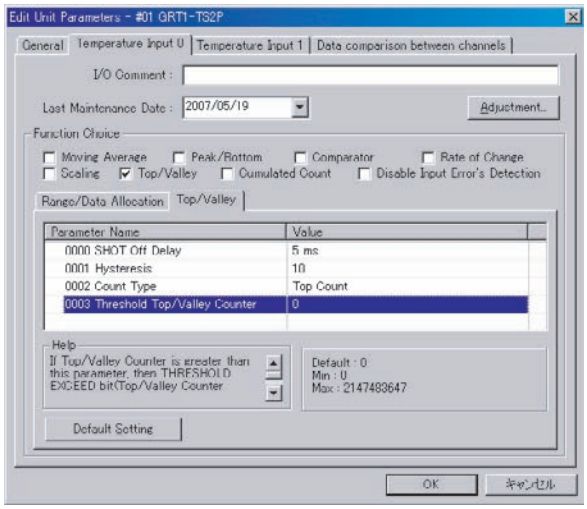

7. Return to the **General** Tab, click the **Download** Button, and then click the **Reset** Button to reset the Unit.
8. Click the **OK** Button and exit the window.

Rate of Change Calculation

The rate of change can be obtained for each sampling cycle set for the temperature input data. This function calculates the difference between each set sampling cycle and value obtained in the previous cycle. The sampling cycle can be set between 250 ms and 65,500 ms in 250-ms increments. The default setting for the sampling cycle is 250 ms.

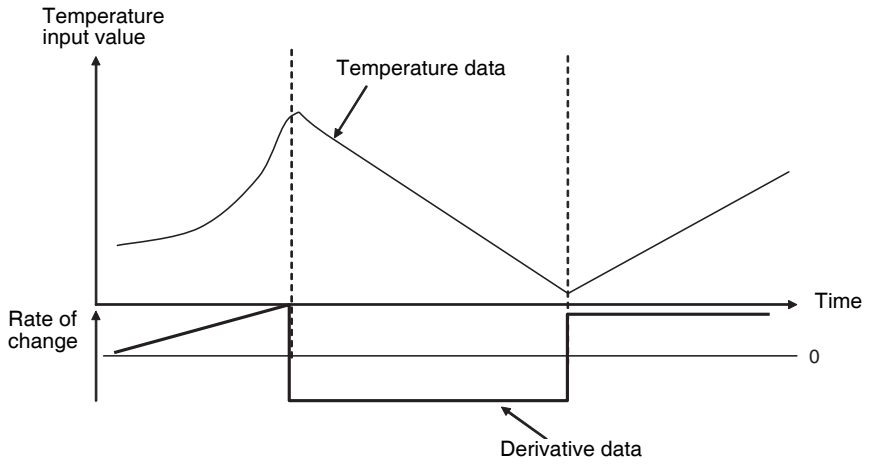

Note If the sampling cycle is set to a small value, the rate of change will be sensitive to small changes. If the temperature data is subject to minute fluctuations, and the sampling cycle is shorter than the cycle of fluctuation, the fluctuation will be regarded as the rate of change. To prevent this occurring, use moving average processing, which will set a longer sampling cycle.

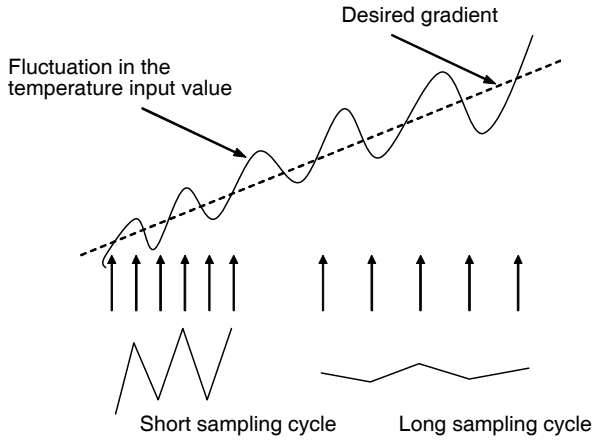

Setting Procedure (Example: DeviceNet Configurator)

1,2,3...

1. In the Network Configuration Window, for the Slice I/O Terminal, double-click the icon of the Slice I/O Terminal that is to be set. Alternatively, right-click the icon and select ***Parameters - Edit***. The Edit Device Parameters Window will be displayed.
2. Select the Temperature Input Unit to be edited from the *I/O Module* Tab Page.
3. Click the **Edit** Button on the *I/O Module* Tab Page. The Edit Unit Parameters Window will be displayed.

4. Select the Tab Page for the input where rate of change is to be set, and select the *Rate of Change* Option in the *Function Choice* Area.

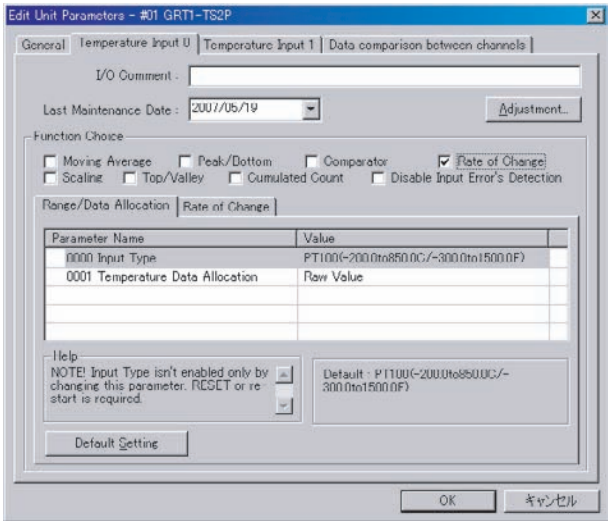

5. To set the sampling cycle, click the **Rate of Change** Tab and input the desired value for the sampling cycle in the *Sampling Rate* Field.

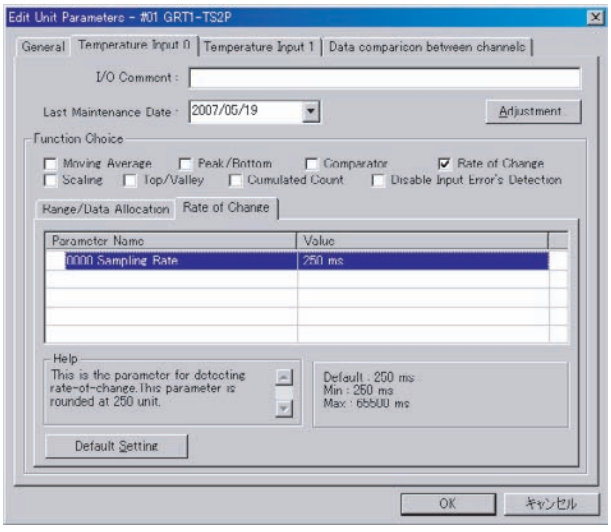

6. Return to the **General** Tab, click the **Download** Button, and then click the **Reset** Button to reset the Unit.
7. Click the **OK** Button and exit the window.

Comparator

When the High High Limit, High Limit, Low Low Limit, and Low Limit are set in the Unit, a Status Flag will turn ON when a value exceeds a setting range. The four set values are High High Limit (HH), High Limit (H), Low Low Limit (LL), and Low Limit (L), and the values can be compared with those in Temperature Data.

The setting range is from –415000 to 415000.

When any of these values is exceeded, the Comparator Result Flag in the area for Temperature Status Flags turns ON. If an alarm does not occur, the Normal Flag (pass signal) turns ON.

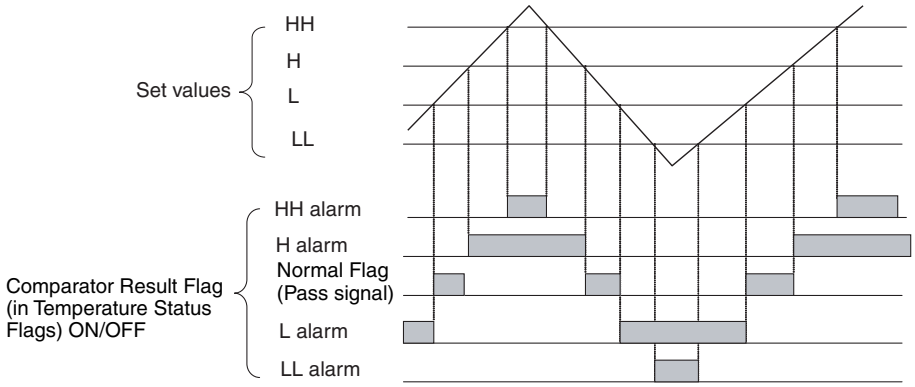

Note If the temperature input value changes faster than the conversion cycle, the High Limit alarm may turn ON without the Normal Flag (pass signal) turning ON for the Low Limit alarm. Configure ladder programs to prevent this occurring.

Setting Hysteresis

The Comparator Result Flag turns OFF when the value is lower than the hysteresis width (H or HH alarm occurs) or exceeds it (L or LL alarm occurs), as shown in the following diagram. If the temperature value fluctuates around the threshold, and the flag repeatedly turns ON or OFF, setting hysteresis will stabilize the flag operation. The setting range is from 0 to 16383.

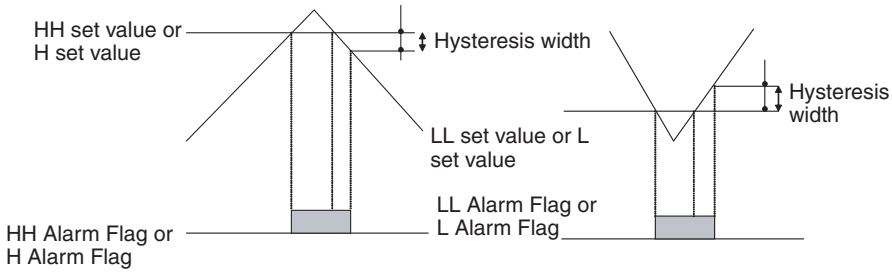

Note When setting the hysteresis value, adjust for each input's decimal point position and the 1/100 Display Mode (if it is being used). Always correct the hysteresis value after changing the display mode setting or changing to an input that has a different decimal point position.

OFF Delay

The time until the Comparator Result Flag turns OFF can be extended. For example, even if the Flag is ON momentarily, the OFF delay can be set so that the Master can receive notification of the Flag's status.

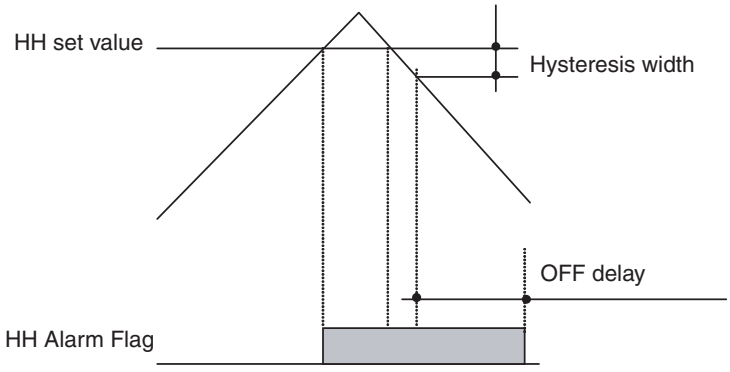

Setting Procedure (Example: DeviceNet Configurator)

1,2,3...

1. In the Network Configuration Window, double-click the icon of the Slice I/O Terminal that is to be set. Alternatively, right-click the icon and select ***Parameters - Edit***. The Edit Device Parameters Window will be displayed.
2. Select the Temperature Input Unit to be edited from the *I/O Module* Tab Page.
3. Click the **Edit** Button on the *I/O Module* Tab Page. The Edit Unit Parameters Window will be displayed.
4. Select the tab page for the input where the comparator function is to be set, and select the *Comparator* Check Box in the *Function Choice* Area.

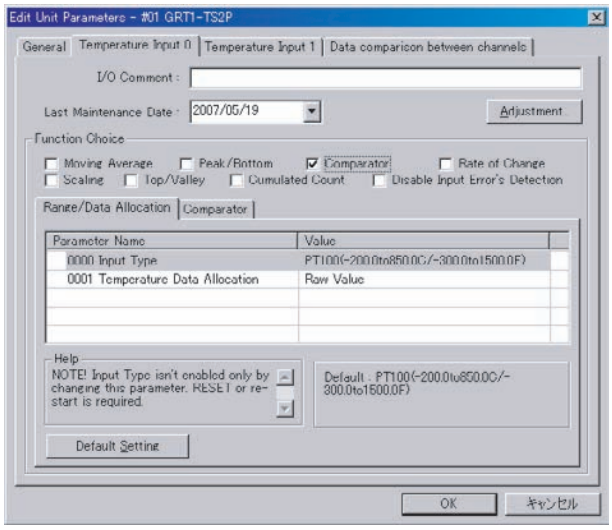

5. Click the **Comparator** Tab and set each of the alarm values. The example here shows the setting for *Alarm Trip Point High (HH)*.

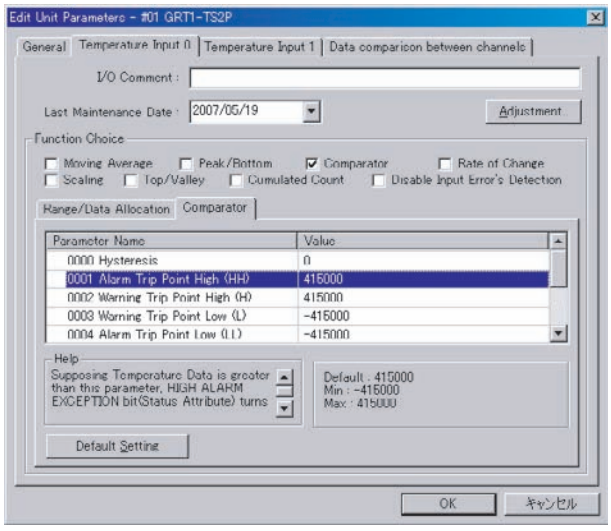

Note When setting the Trip Point, adjust for each input's decimal point position and the 1/100 Display Mode (if it is being used). Always correct the Trip Point after changing the display mode setting or changing to an input that has a different decimal point position.

6. To set the hysteresis value, input the desired value in the *Hysteresis* Field.

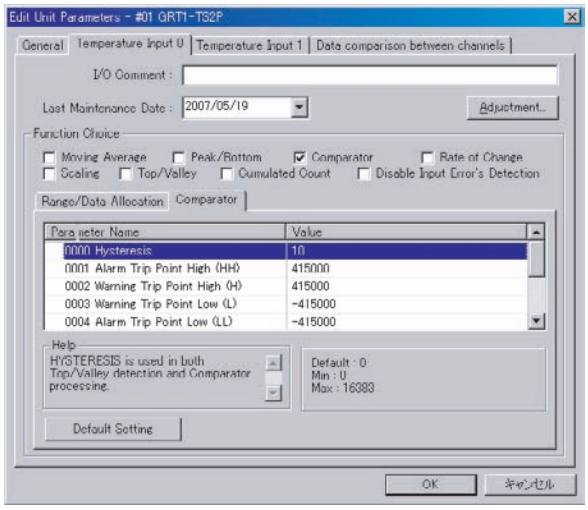

Note The hysteresis value set for the comparator function is also used by the top/valley hold function.

7. To set the OFF delay function, input the desired value in the *Comparator Off Delay* Field.

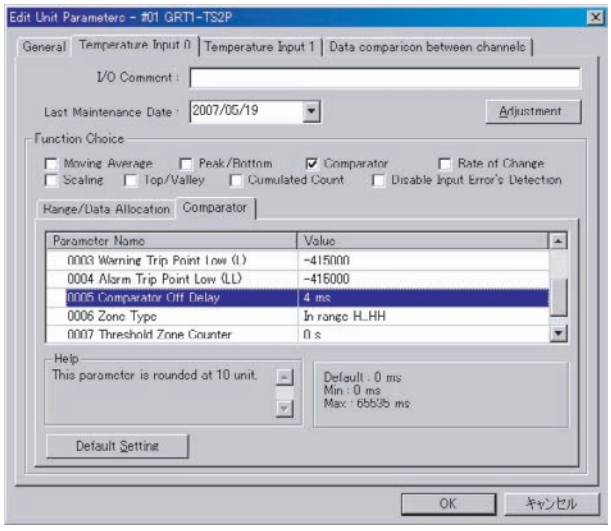

8. Return to the *General* Tab Page, click the **Download** Button, and then click the **Reset** Button to reset the Unit.
9. Click the **OK** Button to exit.

Temperature Zone Counter Function (Zone Count)

This function times (in 1-second units) how long the temperature input value is within a user-set temperature range. The zone count can indicate when preventative maintenance is required for devices or applications that deteriorate at a fixed rate within the user-set temperature range.

Select the temperature zone settings in the **Comparator** Tab. The temperature zone boundaries are defined by the High High Limit (HH), High Limit (H), Low Low Limit (LL), or Low Limit (L). Any threshold value can be set in the Threshold Zone Counter to indicate when the threshold time within the zone has been exceeded. Threshold status can be read in the Maintenance Information Window.

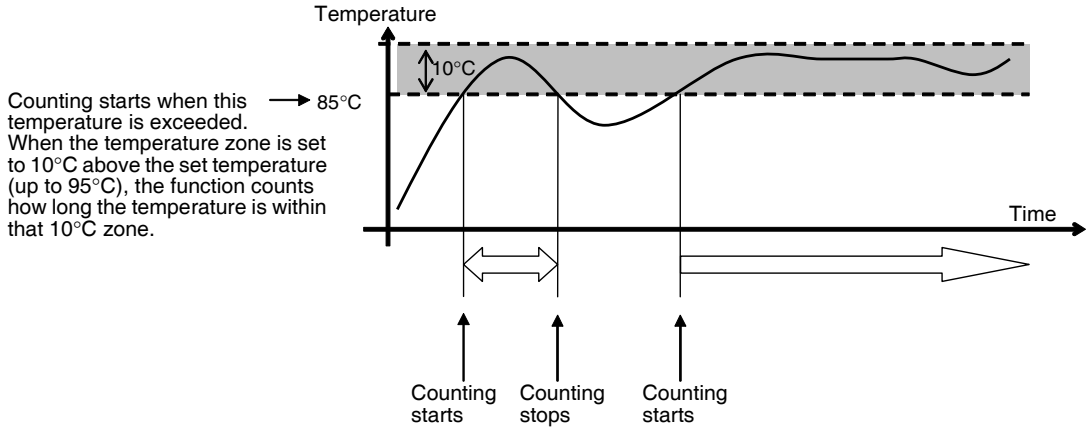

Setting Procedure (Example: DeviceNet Configurator)

1,2,3...

1. In the Network Configuration Window, double-click the icon of the Slice I/O Terminal that is to be set. Alternatively, right-click the icon and select ***Parameters - Edit***. The Edit Device Parameters Window will be displayed.
2. Select the Temperature Input Unit to be edited from the *I/O Module* Tab Page.
3. Click the **Edit** Button on the *I/O Module* Tab Page. The Edit Unit Parameters Window will be displayed.
4. Select the Tab Page for the input where the Zone Count function is to be set, and select the *Comparator* Check Box in the *Function Choice* Area.

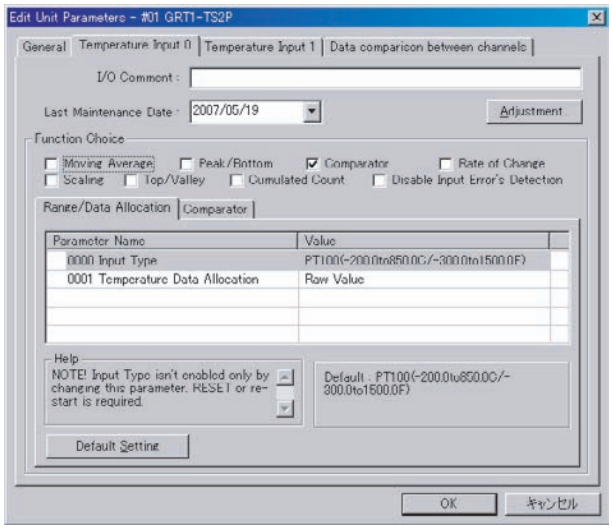

5. Click the **Comparator** Tab and select the desired type of zone from the pull-down menu on the *Zone Type* Field.

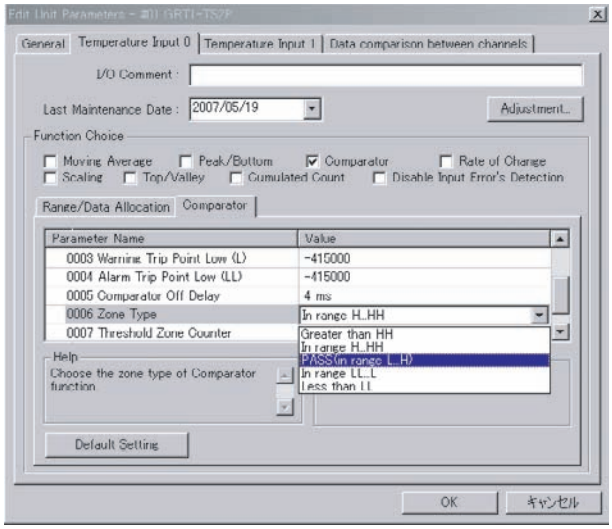

6. A threshold count value (time in seconds) can be set in the *Threshold Zone Counter* Field to indicate when the temperature has been in the temperature zone longer than the threshold setting.

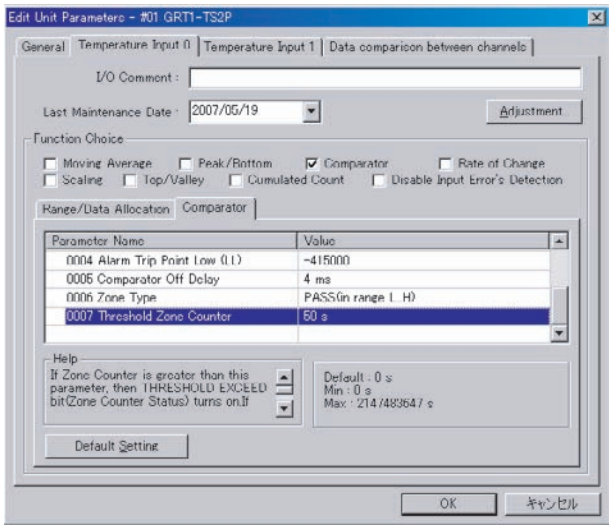

7. Return to the **General** Tab, click the **Download** Button, and then click the **Reset** Button to reset the Unit.
8. Click the **OK** Button and exit the window.

Data Comparison between Channels

This function can be used to compare the temperature values between the two inputs (inputs 0 to 1) to monitor the relative temperature difference. A threshold value can be set to detect an excessive temperature difference for preventative maintenance in devices in which the temperature difference may cause or indicate a problem.

The comparison result and over-threshold status can be read in the Maintenance Information Window.

Note

1. The comparison operation can be performed only on the data set as temperature data.
2. If the peak value or bottom value is selected as the temperature data, the processed peak or bottom value will be used in the comparison operation and not the actual temperature input value.

3. The comparison result will be read to a precision of 0.01, regardless of the setting.

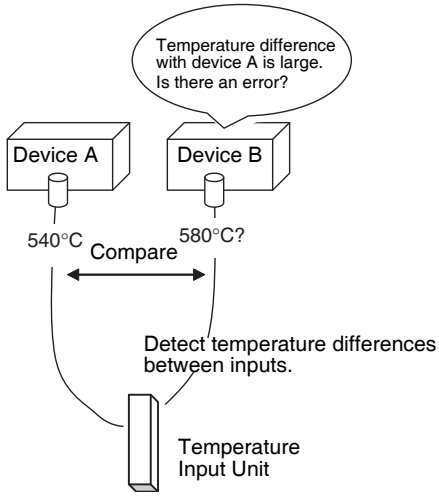

Setting Procedure (Example: DeviceNet Configurator)

1,2,3...

1. In the Network Configuration Window, double-click the icon of the Slice I/O Terminal that is to be set. Alternatively, right-click the icon and select ***Parameters - Edit***. The Edit Device Parameters Window will be displayed.
2. Select the Temperature Input Unit to be edited from the *I/O Module* Tab Page.
3. Click the **Edit** Button on the *I/O Module* Tab Page. The Edit Unit Parameters Window will be displayed.
4. Select the **Data comparison between channels** Tab.

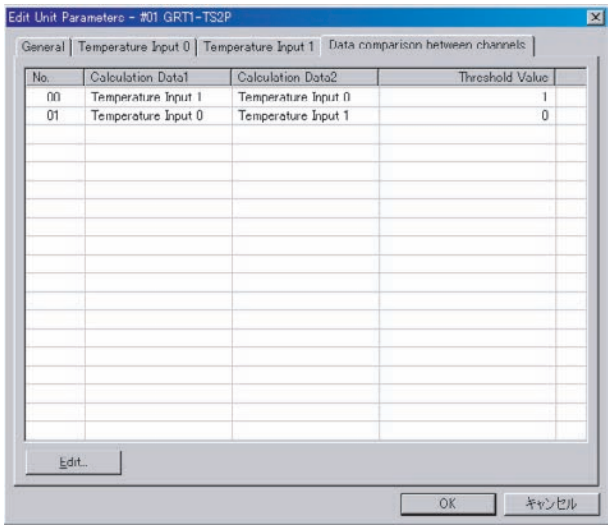

5. Double-click the **Calculation Data1** or **Calculation Data2** header cell to open the Edit Calculation Data Window. Select the two temperature inputs to be compared from the pull-down menus in the *Calculation Data1* and *Calculation Data2* Fields. The comparison will be calculated by subtracting **Calculation Data2** from **Calculation Data1.** Set a threshold value in the *Threshold Value* Field. Always set the threshold value to a precision of 0.01. For example, when setting 10°C, input 1000 for 10.00°C.

6. 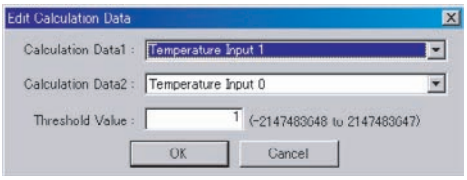

7. Return to the **General** Tab, click the **Download** Button, and then click the **Reset** Button to reset the Unit.
8. Click the **OK** Button and exit the window.
9. The comparison results can be checked in the Maintenance Information Window or **Data comparison between channels** Tab.

Disabling Input Error Detection

Input error detection can be disabled for unused inputs so that input errors, including Off-wire conditions, will not be detected. If input error detection is disabled, the Temperature Input Warning Flag and Off-wire Detection Flag will remain OFF regardless of whether there is a broken or disconnected input wire, or the temperature has exceeded the convertible range. The value of the temperature data will be set to 7FFF hex, just as it is when an Off-wire condition is detected. (The value of the temperature data in 1/100 Display Mode will be 7FFFFFFF.)

Disabling Error Detection (Example: DeviceNet Configurator)

1,2,3...

1. In the Network Configuration Window, double-click the icon of the Slice I/O Unit that is to be set. Alternatively, right-click the icon and select ***Parameters - Edit***. The Edit Device Parameters Window will be displayed.
2. Select the Temperature Input Unit to be edited from the *I/O Module* Tab Page.
3. Click the **Edit** Button on the *I/O Module* Tab Page. The Edit Unit Parameters Window will be displayed.
4. Select the *Disable Input Error's Detection* Check Box in the *Function Choice* Area.

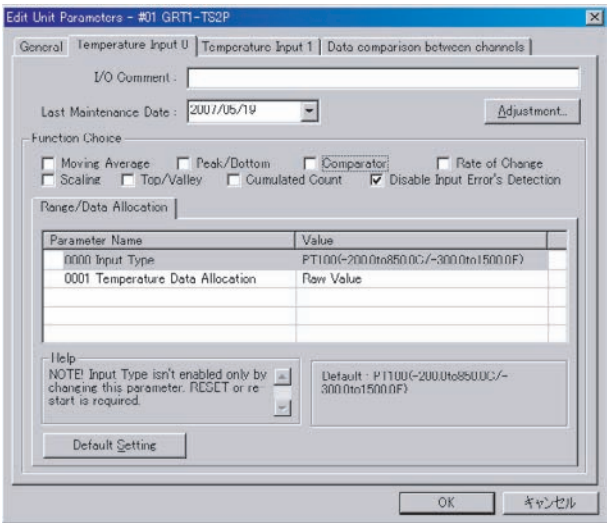

5. Return to the **General** Tab, click the **Download** Button, and then click the **Reset** Button to reset the Unit.
6. Click the **OK** Button to exit.

Note

(1) If an input is not being used, an input error will occur and an over range error and off-wire condition will be detected. This will cause the Temperature Input Warning Flag in the Warning Status Area and the Off-wire Detection Flag in the Alarm Status to turn ON. If the Temperature Status Flag is used, the Off-wire Detection Flag will turn ON. In addition, the ERR indicator will light.

(2) Disable detecting input errors only for inputs that are not being used. If this function is used when a sensor is connected, input errors and Off-wire conditions will not be detected.

Off-wire Detection

If an input sensor is disconnected, the Temperature Input Warning Flag in the Warning Status Area and the Off-wire Detection Flag in the Alarm Status Area will turn ON. If the Temperature Status Flags are being used, the Off-wire Detection Flag for the input where the sensor is disconnected will turn ON. If off-wire detection is enabled, the value of the conversion data will be set to 7FFF hex. (The value in 1/100 display mode will be 7FFFFFFF.) If the input temperature returns to the convertible range, the off-wire detection function will be reset automatically and normal conversion data will be stored.

Last Maintenance Date

The last maintenance date can be set in the Unit separately for the Unit and the connected devices. It enables the user to easily determine the next maintenance date. The date can be set using the Configurator.

Setting Procedure (Example: DeviceNet Configurator)

■ Setting the Last Maintenance Date of the Unit

1,2,3...

1. In the Network Configuration Window, double-click the icon of the Slice I/O Terminal that is to be set. Alternatively, right-click the icon and select ***Parameters - Edit***. The Edit Device Parameters Window will be displayed.
2. Select the Temperature Input Unit to be edited from the *I/O Module* Tab Page.
3. Click the **Edit** Button on the *I/O Module* Tab Page. The Edit Unit Parameters Window will be displayed.
4. Click the **General** Tab, and select the applicable date from the pull-down menu in the *Last Maintenance Date* Field. (To enter the current date, select ***Today***, which is at the bottom of the pull-down menu.)

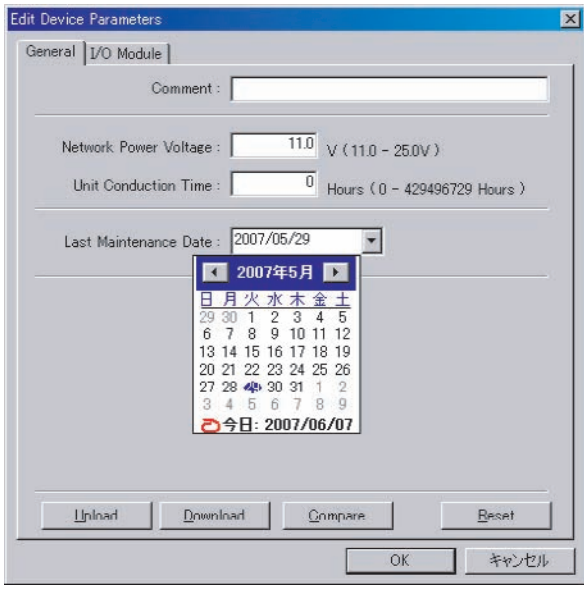

5. Click the **Download** Button, and then click the **Reset** Button to reset the Unit.
6. Click the **OK** Button to exit.

■ **Setting the Last Maintenance Date of the Connected Device**

1,2,3...

1. In the Network Configuration Window, double-click the icon of the Slice I/O Terminal that is to be set. Alternatively, right-click the icon and select ***Parameters - Edit***. The Edit Device Parameters Window will be displayed.
2. Select the Temperature Input Unit to be edited from the *I/O Module* Tab Page.
3. Click the **Edit** Button on the *I/O Module* Tab Page. The Edit Unit Parameters Window will be displayed.
4. Click the tab page for the input that is connected to a connecting device requiring the last maintenance date to be set. Select the applicable date from the pull-down menu in the *Last Maintenance Date* Field. (To enter the current date, select ***Today***, which is at the bottom of the pull-down menu.)

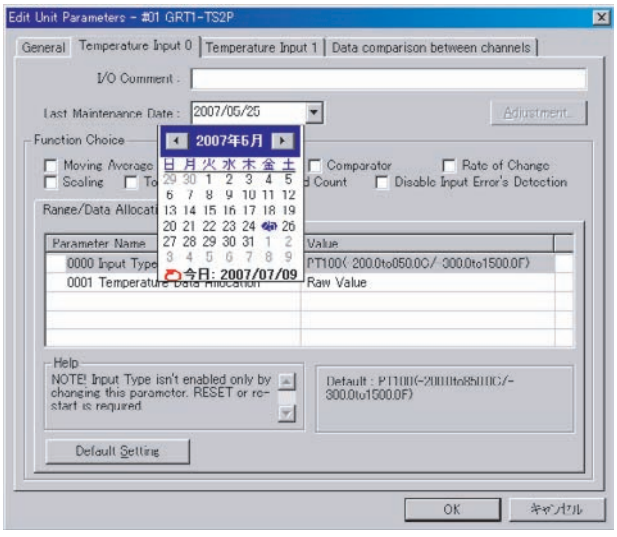

5. Return to the *General* Tab Page, click the **Download** Button, and then click the **Reset** Button to reset the Unit.
6. Click the **OK** Button to exit.

Temperature Cumulative Counter (Cumulated Count)

The cumulative counter calculates an approximation of the integral of the temperature input value over time to calculate the heat exposure to sensors or equipment. Either hours (°C (°F) × hours) or minutes (°C (°F) × minutes) can be selected. For example, a cumulated count of “100.0” indicates a value equivalent to a temperature input value of 100°C (°F) for one hour, if hours has been selected as the unit.

The cumulated count is stored in a 4-byte (2-word) area according to the set unit for 300 divisions (See notes 1 and 2.).

A threshold value can be set to monitor the cumulated count. If the cumulated count exceeds the threshold value, the Cumulative Counter Flag in the Warning Status Area will turn ON and the *Threshold Cumulated Counter Over* Status Check Box in the Maintenance Window will be selected.

Note

(1) If °F is selected, the integration will be performed on the °F values.

(2) If the 1/100 Display Mode is selected, integration will be performed on the 100 times the binary data.

(3) The meaning of the cumulated count depends on the decimal point position of the temperature value.

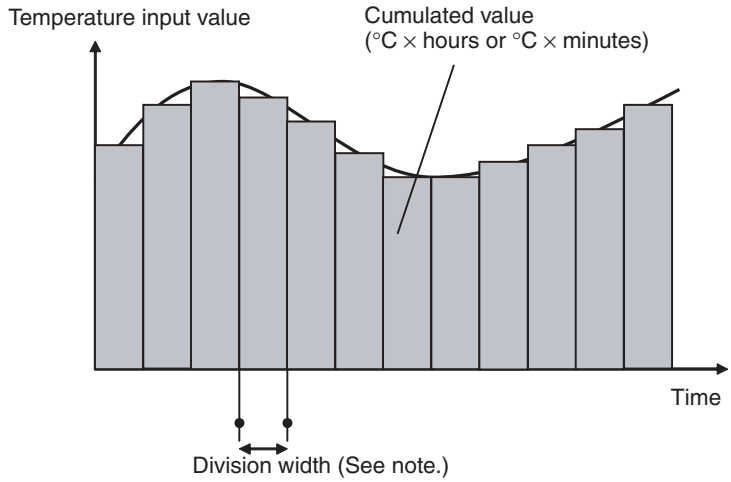

Note The following table shows the divisions for the cumulative counter.

Unit	Divisions	Number of integrations
Hour	12 s	300 times
Minute	200 ms	300 times

Setting Procedure (Example: DeviceNet Configurator)

1,2,3...

1. In the Network Configuration Window, double-click the icon of the Slice I/O Terminal that is to be set. Alternatively, right-click the icon and select ***Parameters - Edit***. The Edit Device Parameters Window will be displayed.
2. Select the Temperature Input Unit to be edited from the *I/O Module* Tab Page.
3. Click the **Edit** Button on the *I/O Module* Tab Page. The Edit Unit Parameters Window will be displayed.
4. Select the tab page for the input where the cumulative counter is to be set, and select the *Cumulated Count* Check Box in the *Function Choice* Area.

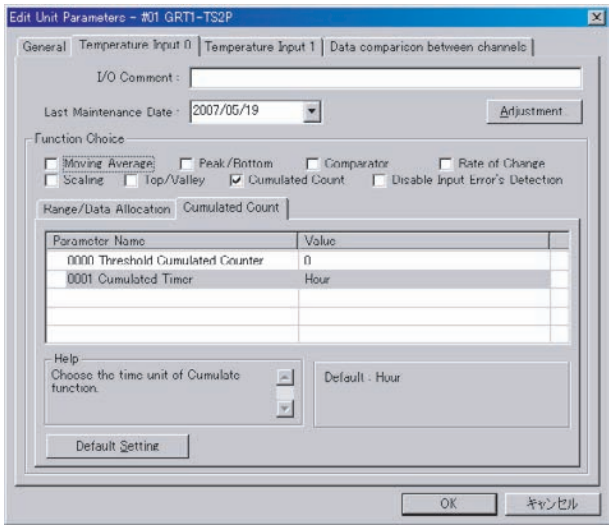

5. To set the counter unit, click the **Cumulated Count** Tab and select *Hour* or *Minute* from the pull-down menu in the *Cumulated Timer* Field.

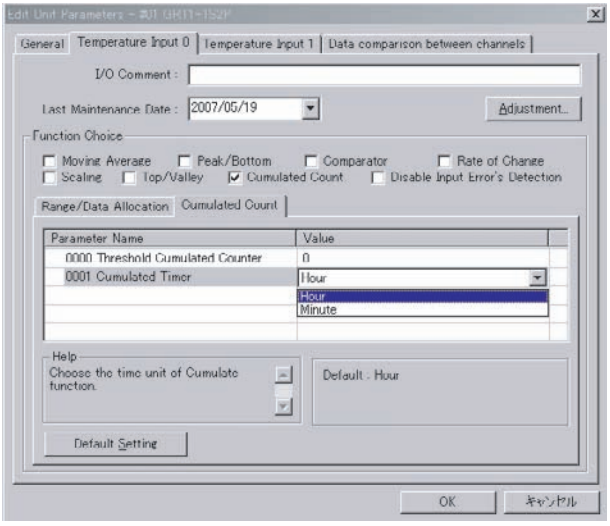

6. To set the monitor value, click the **Cumulated Count** Tab, and input the desired value in the *Threshold Cumulated Counter* Field. If monitor value is set to 0, monitoring will not be enabled.

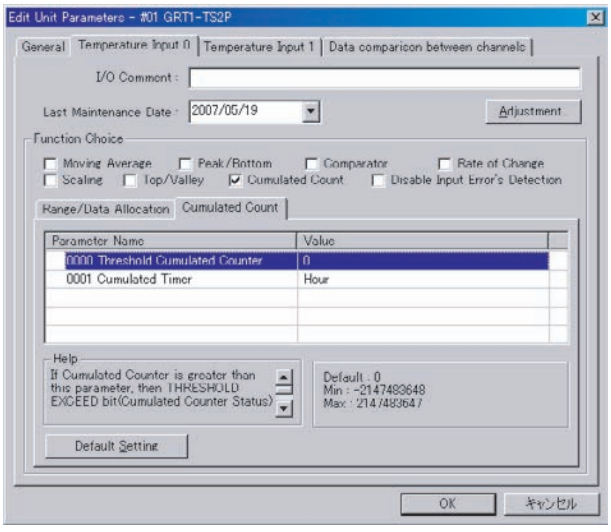

7. Return to the *General* Tab Page, click the **Download** Button, and then click the **Reset** Button to reset the Unit.
8. Click the **OK** Button to exit.

User Adjustment

A user adjustment can be set to compensate for an offset in the input value caused by factors such as the characteristics and connection methods of the input sensor.

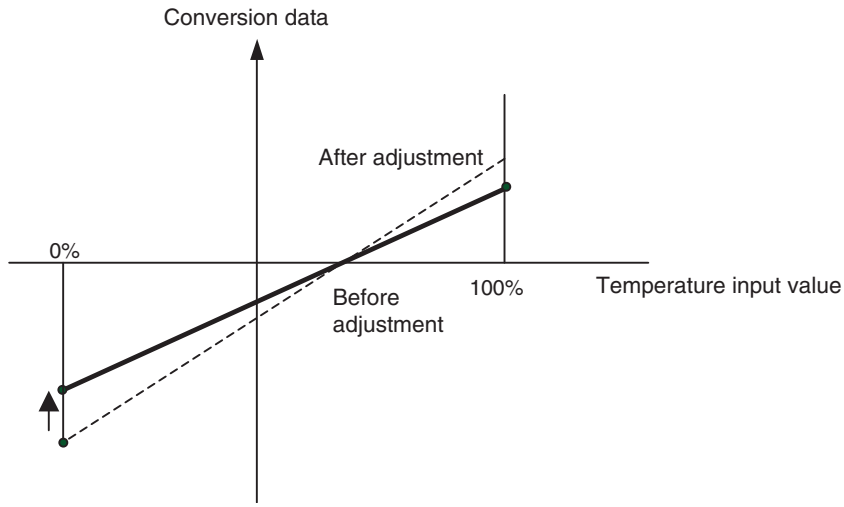

Note

(1) Temperature Input Units are properly adjusted at the factory before shipment, so it is normally unnecessary to make adjustments. Use the user adjustment only when absolutely necessary. OMRON is not responsible for the results of user adjustment. If a mistake is made in the adjustment, the adjustment data can be cleared to return to the factory default settings.

(2) The Temperature Input Unit continues the temperature conversion operations even after user adjustment has been made. It is possible for temperature data values to change suddenly from previous values after the user adjustment is made, so always consider the effects on the operating environment before applying the user adjustment.

Adjustment Procedure for the GRT1-TS2T

Use the following procedure to adjust the Temperature Input Terminal. Follow the flowchart closely for proper adjustment.

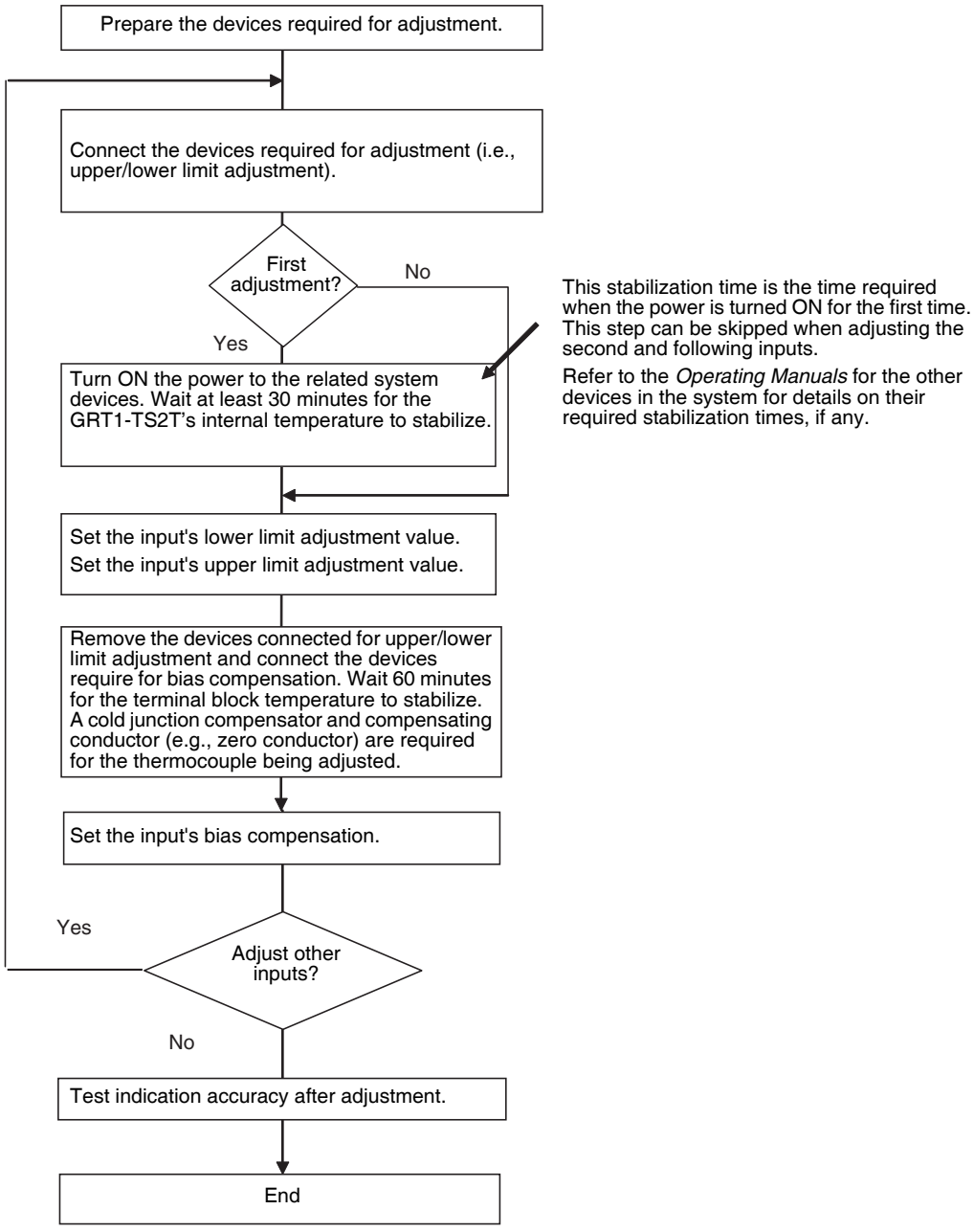

Note The only sensors that can be adjusted are ones that operate while the power supply is ON. When adjusting for sensors that are not presently in use, change the input type setting, toggle the power supply or reset the Unit from the Configurator, and perform the adjustment procedure from the beginning of the flowchart.

Connecting the Devices required for GRT1-TS2T Adjustment

The following paragraphs explain how to connect the devices that must be connected to the GRT1-TS2T for user adjustment. Wire the following devices properly when adjusting the GRT1-TS2T.

■ **Reference Voltage/Current Generator (STV) and Precision Digital Multimeter (DMM)**

Used to make adjustments at the upper limit and lower limit.

Prepare devices that can generate accurate 0 mV, 20 mV, and 50 mV voltages. Use a precision digital multimeter that can measure the output voltage and indicate when the voltage/current generator is not producing an accurate voltage output.

■ **Cold Junction Compensator (such as a ZERO-CON) and Compensating Conductors**

Used to adjust the bias compensation value.

The cold junction compensator (the ZERO-CON is used in following examples) is a device that maintains an accurate 0°C (32°F) temperature for thermocouple sensors. Use a cold junction compensator compatible with the sensor being adjusted.

Note When using an R, S, E, B, or W type thermocouple, a K type can be substituted. Set the ZERO-CON to 0°C (32°F).

■ **Adjustment Device Connection Diagram**

Connect the reference voltage/current generator (STV), precision digital multimeter (DMM), and cold junction compensator to the input terminals. In the following examples, the devices are connected to input 1, but connect to the corresponding terminals when adjusting input 2.

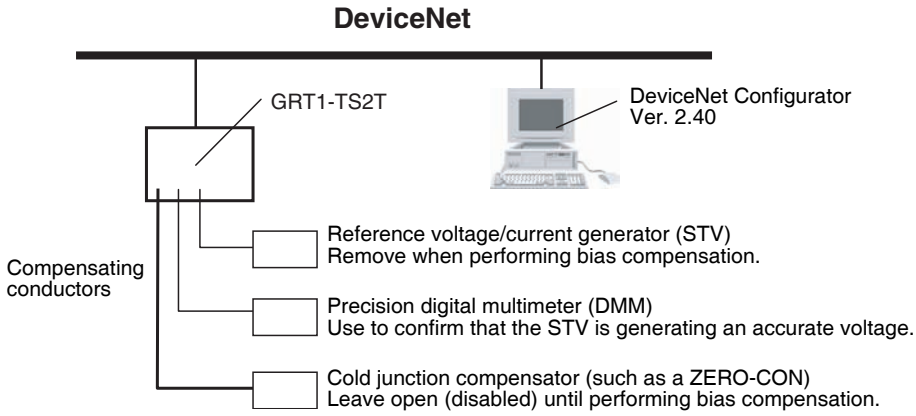

Note The personal computer (Configurator) is connected through DeviceNet in the diagram above. If a CS1W-DRM21 or CJ1W-DRM21 Master Unit is being used, the Configurator can also be connected through the Master Unit using a peripheral bus connection. Refer to *5-1 Switching between Online and Offline* in the *DeviceNet Configurator Operation Manual* (Cat. No. W382) for details.

■ Input Terminal Connections

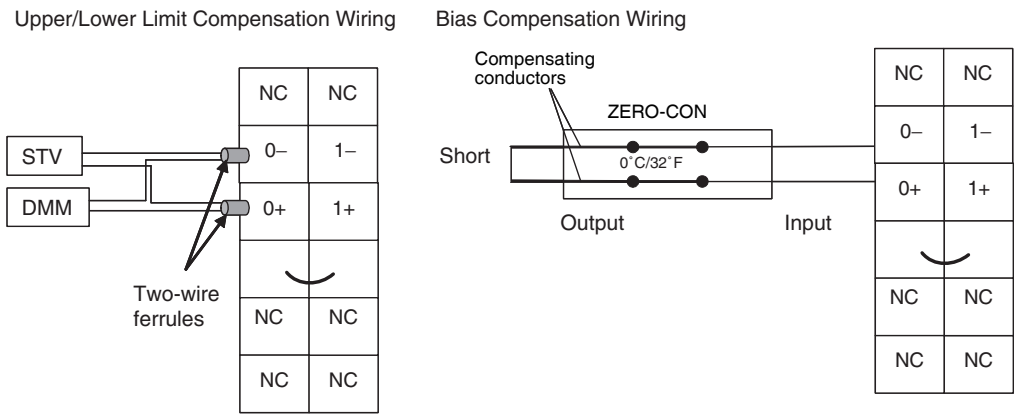

Checking the Wiring and Making Adjustments

■ Adjusting the GRT1-TS2T's Upper and Lower Limit Values

1,2,3...

1. Wire the Unit as shown above for upper/lower limit compensation. To connect a high-precision digital multimeter (DMM), use 2-wire ferrules.
2. Check the sensor and input type being used.

   Note When using an R, S, B, E, or W sensor, use a K thermocouple's compensating conductors. In addition, when using an R, S, or B type sensor, set the input type as K (0.0 to 500.0°C). When using an E or W type sensor, set the input type as K (–200 to 1,300°C).
3. Connect the Configurator to the DeviceNet network and go online.
4. Upload settings to the Configurator.
5. Turn ON the power supplies of all Units, including the Temperature Input Terminal to be adjusted. Wait approximately 30 minutes for the Temperature Input Terminal's internal temperature to stabilize.
6. Double-click the icon of the Temperature Input Terminal to be set in the Main Window and open the Edit Device Parameters Window. (From the Maintenance Mode Window, click the right mouse button over the Slave icon and select ***Parameters*** and ***Edit***.)

7. Select the Tab Page for the input that will be adjusted and click the **Adjustment** Button to open the Adjustment Window.

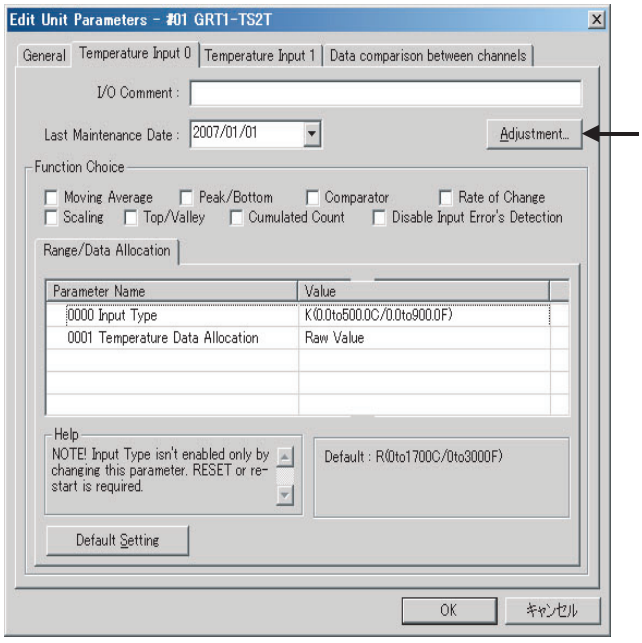

8. Adjust the lower limit value (lower adjusting value). Input 0 mV from the reference voltage/current generator (STV) to the Temperature Input Terminal's input terminals. Wait at least 1 minute for the input to stabilize.
9. Click the **Fix lower adjusting Value** Button. The lower limit adjustment value will be stored in the Unit.

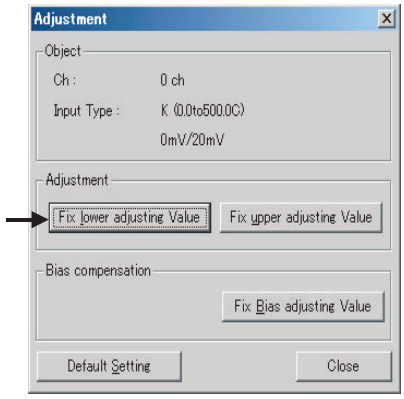

10. Adjust the upper limit value (upper adjusting value). Input the upper limit voltage from the reference voltage/current generator to the input terminals of the input to be adjusted. Refer to the following table for the appropriate voltage. Wait at least 1 minute for the input to stabilize.

Input type	Input voltage
K (–200 to 1300°C)	50 mV
K (0.0 to 500.0°C)	20 mV
J (–100 to 850°C)	50 mV
J (0.0 to 400.0°C)	20 mV
T	20 mV
L (–100 to 850°C)	50 mV
L (0.0 to 400.0°C)	20 mV
U	20 mV

Input type	Input voltage
N	50 mV
PL2	50 mV

11. Click the **Fix upper adjusting Value** Button. The upper limit adjustment value will be stored in the Unit.

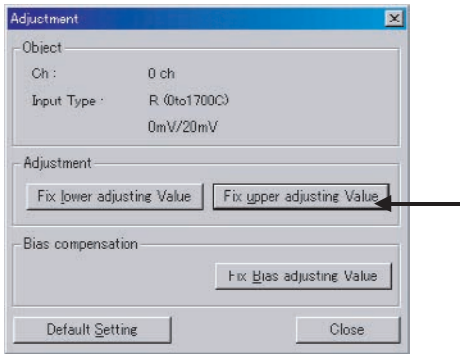

12. To check whether the user adjustment values have been accepted and the Unit is operating with adjustment values different from the factory defaults, click the right mouse button over the Slave icon and select ***Maintenance Information*** to open the Maintenance Information Window.
Select the Tab Page for the input that was adjusted. If there is a check in the *User Adjustment* Box (bottom right box), the Unit is operating with user-set adjustment values.

Note

1. When checking whether or not the user adjustment values have been set correctly, always refresh the data by clicking the **Update** Button in the Maintenance Information Window's **General** Tab or uploading the settings again. For details on the Maintenance Information Window, refer to *6-3 Maintenance Information Window*.
2. If the correct reference voltage was not input, the adjustment values may not be accepted.

■ Adjusting the GRT1-TS2T's Bias Compensation Value

1,2,3...

1. Remove the wiring for upper/lower limit compensation and wiring the Unit as shown for bias compensation.
2. After completing wiring, wait until the temperature data stabilizes (i.e., until there is no change in the temperature data for at least 20 minutes). Depending on the system setup, this may take over 60 minutes. When the temperature data is stable, click the **Fix Bias adjusting Value** Button.

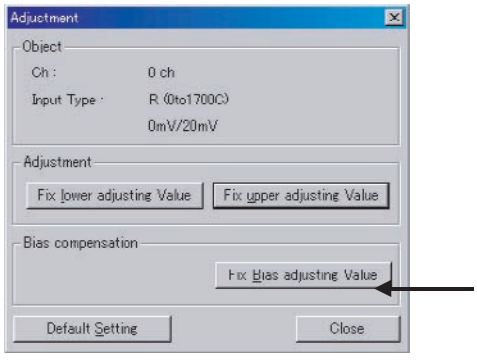

■ Resetting User Adjustments

If it is necessary to reset the upper limit adjustment value, lower limit adjustment value, and bias compensation value to the factory defaults, click the **Default Setting** Button. The settings will be returned to the factory settings. The upper/lower limit adjustment values and bias compensation value are all initialized at the same time.

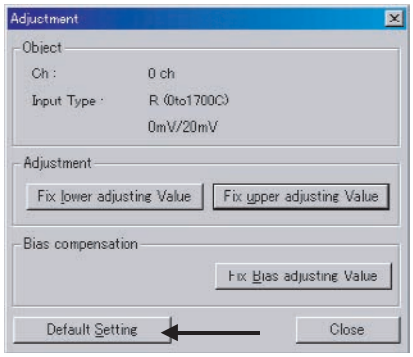

Note

1. The bias compensation value may not be accepted if there is a large temperature difference between the Terminal Block and ZERO-CON (0°C bath). If this problem occurs, correct the adjustment system by using a ZERO-CON compatible with the sensor being adjusted or other means.
2. Always test the indication accuracy after making user adjustments to verify that the adjustments are correct. Test the indication accuracy at three points: the lower limit value, an intermediate value, and the upper limit value.
   - Connect the external devices as shown in the following diagram.
   - After verifying that the ZERO-CON is set to 0°C, set the STV's output voltage to produce a voltage equivalent to the test voltage.

   Note Always use the compensating conductors (the same kind that will be used with the sensor being adjusted) to connect the ZERO-CON to the GRT1-TS2T's input terminals.

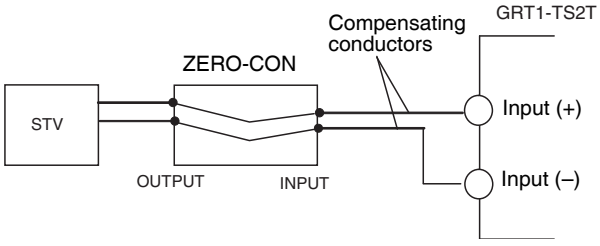

Note In order to perform the adjustment procedure properly, always allow sufficient time for temperature stabilization, as shown in the following diagram. Also allow sufficient time for devices such as the STV, DMM, and ZERO-CON to stabilize. Refer to each device's operating manual for details.

Stabilization Times Required in Each Step

The following diagram shows the stabilization times (waiting times) required when adjusting both inputs.

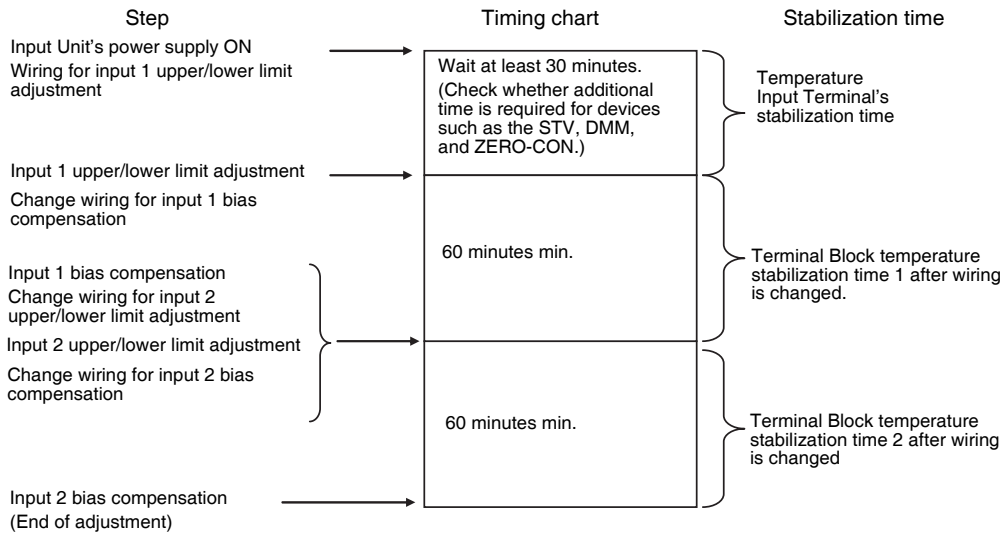

Note The terminal block temperature stabilization time does not affect the upper/lower limit adjustment, so the adjustment can be performed immediately if 30 minutes have passed since the Temperature Input Terminal's power was turned ON.

GRT1-TS2P/TS2PK Adjustment Procedure Flow

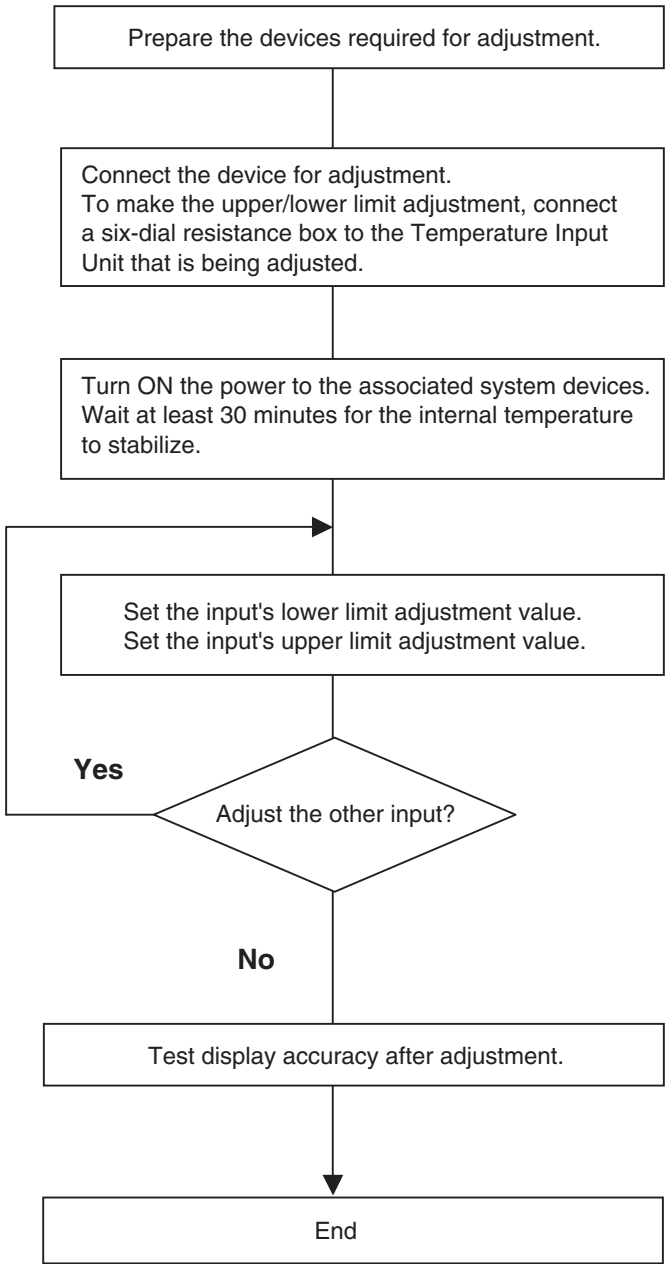

Note Only sensors that operate while the power supply is ON can be adjusted. When adjusting for a sensor that is not presently in use, change the input type setting and perform the adjustment procedure from the beginning of the flowchart.

Connecting the Devices Required for Adjustment

This section explain how to connect the devices that must be connected to make a user adjustment. Wire the following devices properly before making an adjustment.

■ Six-dial Resistance Box and Precision Digital Multimeter

These are used to make adjustments at the upper limit and lower limit. Prepare devices that can provide accurate resistance values for measurement. Use a precision digital multimeter that can measure the resistance values and indicate when the six-dial resistance box is not producing an accurate resistance.

Adjustment Device Connection Diagram

Connect the six-dial resistance box to the input terminals. In the following example, the device is connected to input 0, but connect to the input 1 terminals when adjusting input 1.

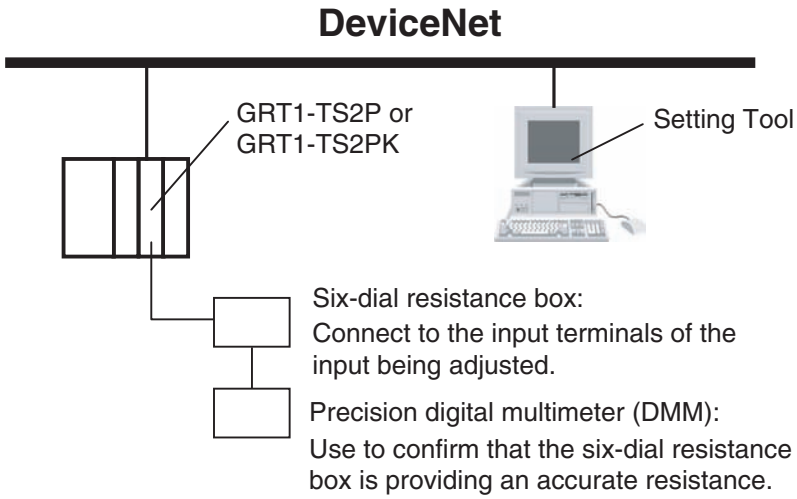

Note

(1) When connecting the six-dial resistance box, use a cable with the same gauge as the one that will be used for operation.

(2) The personal computer running the Configurator is connected through DeviceNet in the above diagram. If a CS1W-DRM21 or CJ1W-DRM21 is being used, the Configurator can also be connected through the Master Unit using a peripheral bus connection. Refer to *5-1 Switching between Online and Offline* in the *DeviceNet Configurator Operation Manual* (Cat. No. W382) for details.

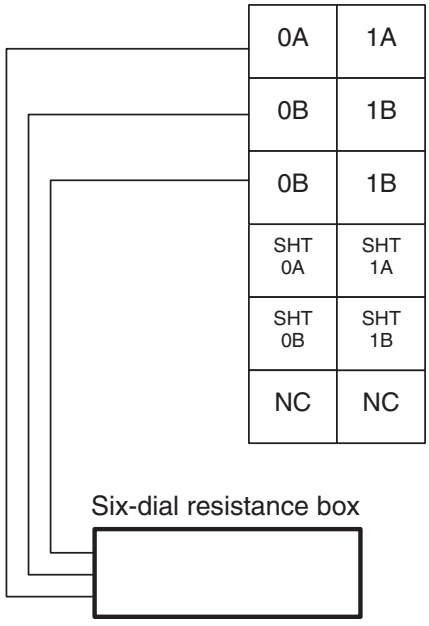

Checking the Wiring and Making Adjustments

■ Adjusting the Upper and Lower Limit Values

1,2,3...

1. Set the resistance value on the six-dial resistance box equivalent to the test value and properly wire the box to the input of the Temperature Input Unit that is being adjusted.
2. If the correct resistance cannot be obtained, properly wire the digital multimeter to the six-dial resistance box and measure the resistance.
3. Connect the Configurator to the DeviceNet network and go online.
4. Upload settings to the Configurator.
5. Turn ON the power supplies of all Units, including the Temperature Input Unit to be adjusted. Wait approximately 30 minutes for the Temperature Input Unit's internal temperature to stabilize.
6. Double-click the icon of the Temperature Input Unit to be set in the window to open the Edit Unit Parameters Window. (From the Maintenance Mode Window, click the right mouse button over the icon and select ***Parameters - Edit.***)
7. Select the tab page for the input that will be adjusted and click the **Adjustment** Button to open the Adjustment Window.

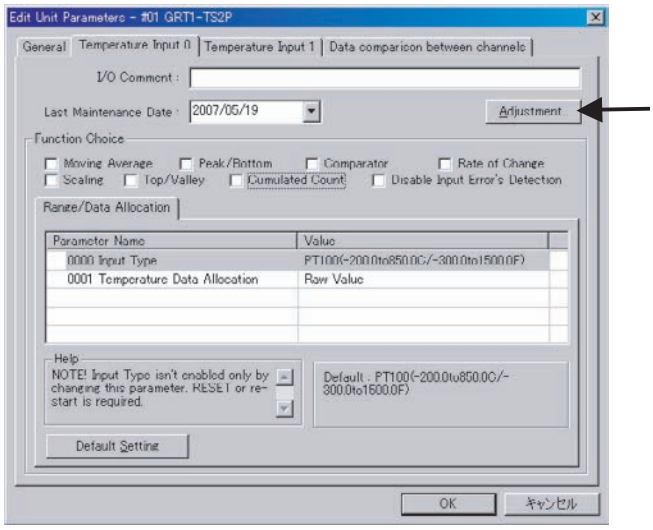

8. Adjust the lower limit value (lower adjusting value). Refer to the following table for the appropriate resistance to input from the six-dial resistance box to the Temperature Input Unit's input terminals. Wait at least 1 minute for the input to stabilize.

Model	Input type	Lower limit adjustment input resistance
GRT1-TS2P	PT100 (–200 to 850°C)	18 Ω
	PT100 (–200 to 200°C)	18 Ω
GRT1-TS2PK	PT1000 (–200 to 850°C)	180 Ω
	PT1000 (–200 to 200°C)	180 Ω

9. Click the **Fix Lower Adjusting Value** Button. The lower limit adjustment value will be stored in the Unit.

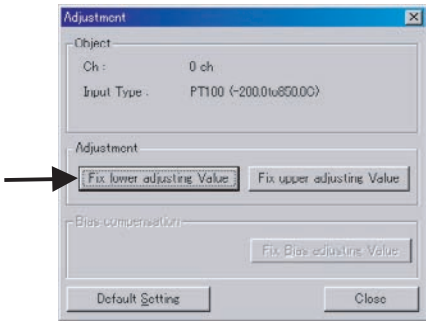

10. Adjust the upper limit value (upper adjusting value). Refer to the following table for the appropriate resistance to input from the six-dial resistance box to the Temperature Input Unit's input terminals. Wait at least 1 minute for the input to stabilize.

Model	Input type	Upper limit adjustment input resistance
GRT1-TS2P	PT100 (–200 to 850°C)	390 Ω
	PT100 (–200 to 200°C)	180 Ω
GRT1-TS2PK	PT1000 (–200 to 850°C)	3,900 Ω
	PT1000 (–200 to 200°C)	1,800 Ω

11. Click the **Fix Upper Adjusting Value** Button. The upper limit adjustment value will be stored in the Unit.

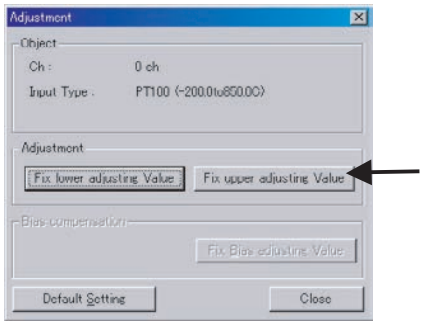

12. If it is necessary to restore the upper and lower limit adjustment values to the default settings, click the **Default Setting** Button. The settings will be returned to the factory settings.

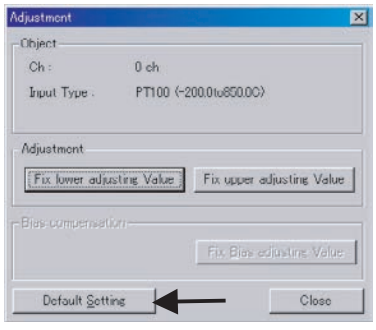

13. To check whether the user adjustment values have been accepted and the Unit is operating with adjustment values instead of the default values, right-click device icon and select ***Maintenance Information*** to open the Maintenance Information Window. Select the tab page for the input that was adjusted. If the *User Adjustment* Check Box (bottom right box) is selected, the Unit is operating with user-set adjustment values.

Note (1) When checking whether or not the user adjustment values have been set correctly, always refresh the data by clicking the **Update** Button on the Maintenance Information Window's *General* Tab Page or uploading the settings again. For details on the Maintenance Information Window, refer to *6-3 Maintenance Information Window*.

(2) Always test the display accuracy after making user adjustments to verify that the adjustments are correct. Test the display accuracy at three points: the lower limit value, an intermediate value, and the upper limit value.

- Connect the external devices as shown in the following diagram.
- Wait at least 30 minutes after the Temperature Input Unit's power is turned ON and set the resistance value on the six-dial resistance box equivalent to the test value.

Note After adjustment, it is not necessary to wait 30 minutes if continuing testing without turning the power OFF.

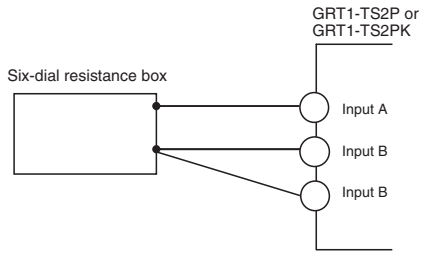

SECTION 7
Counter Units and Positioning Unit

This section provides information required to operate Counter Units and Positioning Units, including functions, status areas, windows, specifications, wiring, I/O data assignments, and settings.

7-1 Overview 226
7-1-1 Counter Units and Positioning Unit 226
7-1-2 List of Data Processing Functions 226
7-1-3 I/O Data 227
7-2 Status Areas. 227
7-3 Maintenance Information Window 229
7-3-1 Checking Maintenance Information 229
7-4 GRT1-CT1(-1) Counter Units. 235
7-4-1 Specifications 235
7-4-2 Hardware. 237
7-4-3 I/O Data Details 240
7-4-4 Functions and Settings 242
7-5 GRT1-CP1-L Positioning Unit 252
7-5-1 Specifications 252
7-5-2 Hardware. 254
7-5-3 I/O Data Details 258
7-5-4 Functions and Settings 261

7-1 Overview

This section provides an overview of the GRT1-CT1 and GRT1-CT1-1 Counter Units and the GRT1-CP1-L Positioning Unit.

7-1-1 Counter Units and Positioning Unit

The GRT1-CT1(-1) Counter Units and GRT1-CP1-L Positioning Unit provide special functions in addition to the backup, restore, and other functions common to GRT1-series Slice I/O Units. The special functions include counting functions, counter value comparison ranges, and a digital input that can be set to control the counter.

Counter data, such as the Present Counter Value or the value in the Preset Value Register, can be assigned as I/O data along with status information. The Setting Tool can be used to allocate status data, to set functions specific to the Counter Units/Positioning Unit, and to perform monitoring.

7-1-2 List of Data Processing Functions

The following table lists the data processing functions that can be used with Counter Units and Positioning Units. Refer to *7-4-4 Functions and Settings* and *7-5-4 Functions and Settings* for details on functions and setting methods.

GRT1-CT1(-1) Counter Units and GRT1-CP1-L Positioning Units

Function	Details	Default
Counter	Each Counter Unit or Positioning Unit provides one counter that operates according to the mode set by the user.	Always enabled.
Digital I/O	One input and one or two outputs can be used to control and monitor the counter.	IN: No action. OUT, OUT0, and OUT1: Assigned to comparison ranges.
Comparison ranges	A range can be set to control a digital output. When the counter value is within the range, the output will turn ON or OFF according to the relationship between the counter value and the comparison range. There is one comparison range for each digital output.	No ranges are set.
Reset	The counter can be reset by using the digital input or by using a user command in I/O data.	Disabled.
Preset	The counter can be preset to a specific value by using the digital input or by using a user command in I/O data.	Disabled.
Capture	The Present Counter Value can be stored in memory. The stored value can be retrieved at any time. The counter value can be captured by using the digital input or by using a user command in I/O data.	Disabled.
Z-reset	The counter can be reset on the rising edge of the Z input according to the user setting. The same input is shared between the Z input and the digital input in the Counter Units, but separate Z and digital inputs are provided in the Positioning Unit.	Disabled.
Counter frequency	The frequency of the counter input pulse can be measured. The measured frequency is calculated as the Present Counter Value minus the counter value from one second ago. The counter value is sampled every 0.1 s. All sampled counter data is set to 0 or to the preset value when the counter value is reset or preset, and the frequency measurement is started again.	Always enabled.
Action on bus error	The action that is taken when a SmartSlice bus error occurs can be set. The digital outputs can be cleared or maintain their normal functionality. The counter continues to operate normally even when an error occurs.	Outputs cleared.

Function	Details	Default
Action on bus idle	The action that is taken when the SmartSlice bus goes idle can be set. The digital outputs can either be cleared or their maintain functionality. The counter continues to operate normally.	Outputs cleared.
Last maintenance date	The date of the last time Unit maintenance was performed is recorded.	2005/1/1

7-1-3 I/O Data

Counter Units and Positioning Units have both input and output data. Three words are allocated for the Master's Output Area as output data from the Master to the Unit and three words are allocated for the Master's Input Area as input data from the Unit to the Master. Refer to *7-4-3 I/O Data Details* for detailed information on the I/O data.

Input Data

I/O data	Details
Counter data and status data (6 input bytes)	• Used to monitor counter data. • Provides counter Status Flags.

Output Data

I/O data	Details
Counter settings and control data (6 output bytes)	Used to set up and control the counter.

7-2 Status Areas

A Counter Unit or Positioning Unit has two status areas. The Unit's Status Flags are turned ON and OFF based on the threshold/monitor values set for the functions in the Unit. A flag in the Communications Unit will be turned ON only when the corresponding flag has been turned ON in one of the status areas.

The Communications Unit's Status Flag information is transmitted to the Master. The Counter Unit's or Positioning Unit's status area can be read from a Programming Device.

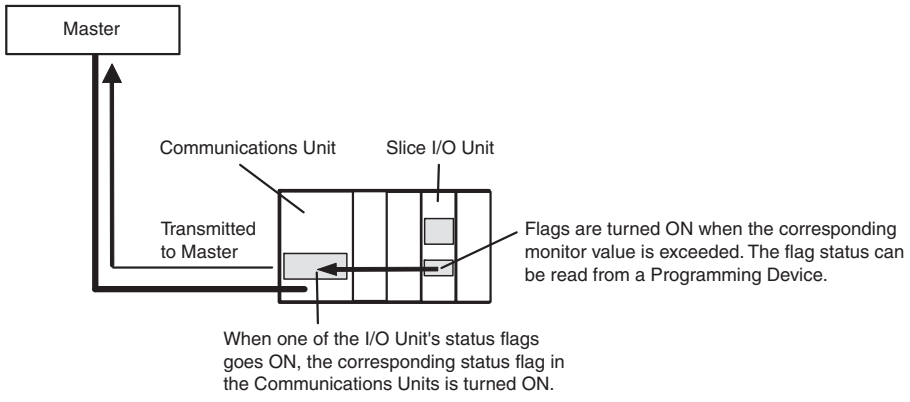

Warning Status Area

The Counter Unit's or Positioning Unit's Warning Status Area contains the following 16 bits. The Warning Status Area provides notification of minor errors in the Unit. When any of the flags turns ON, bit 2 of the Communications Unit's Status Flags is turned ON and that information is transmitted to the Master.

Bit	Content	Description
0	Reserved	---
1	Reserved	---
2	Reserved	---
3	Unit Maintenance Flag OFF: Normal ON: Error (Over threshold or 87672 hours)	Monitors the power ON time warning value set for the Unit Conduction Time Monitor function. Also monitors whether 87672 hours (10 years) have elapsed.
4	Reserved	---
5	Reserved	---
6	Reserved	---
7	Reserved	---
8	Reserved	---
9	Connected Device Maintenance Flag OFF: Within range (all points below set value) ON: Out-of-range (one or more points exceeded set value)	Monitors the warning value set for the Contact Operation Counter or Total ON Time Monitor function.
10	Reserved	---
11	Reserved	---
12	Reserved	---
13	Reserved	---
14	Reserved	---
15	Reserved	---

Alarm Status Area

The Counter Unit's or Positioning Unit's alarm status area contains the following 16 bits.The Alarm Status Area provides notification of serious errors in the Unit. The flags indicate non-fatal errors in the Unit. When any of these flags turns ON, bit 3 of the Communications Unit's Status Flags is turned ON and that information is transmitted to the Master.

Bit	Content	Description
0	Reserved	---
1	EEPROM Data Error Flag	OFF: Normal ON: Error occurred
2	Reserved	---
3	Reserved	---
4	Reserved	---
5	Reserved	---
6	Reserved	---
7	Reserved	---
8	I/O Power Supply Status Flag	OFF: I/O power supply ON ON: I/O power supply OFF
9	Reserved	---
10	Reserved	---
11	Reserved	---
12	Reserved	---

Bit	Content	Description
13	Reserved	---
14	Reserved	---
15	Reserved	---

7-3 Maintenance Information Window

This section describes the Maintenance Information Window, which can be used to monitor the status of Counter Units and Positioning Units. The Monitor Device Window can be used to check the same Unit status information, but the examples in this section use the Maintenance Information Window.

7-3-1 Checking Maintenance Information

There are two ways to check maintenance information. One way is to right-click in the Main Window of the Setting Tool and select ***Maintenance Information***. The other way is to double-click the Unit in the Maintenance Mode Window, click the **I/O Module** Tab, select the desired Unit, and click the **View** Button to display the Maintenance Information Window of the Counter Unit or Positioning Unit.

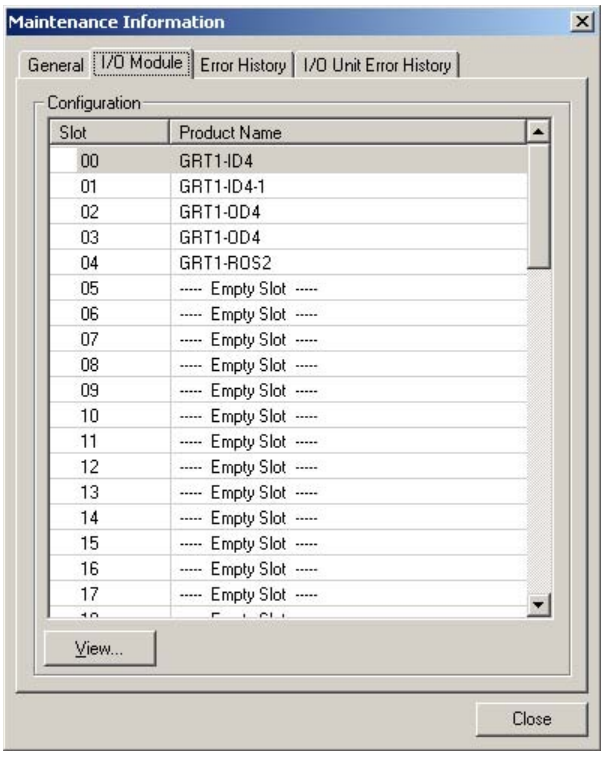

Maintenance Information Window

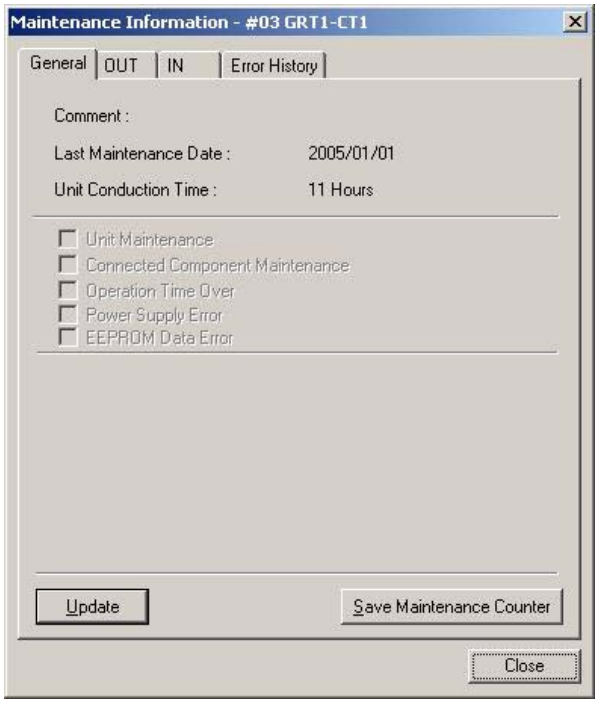

Tab Pages in the Maintenance Information Window

General Tab Page

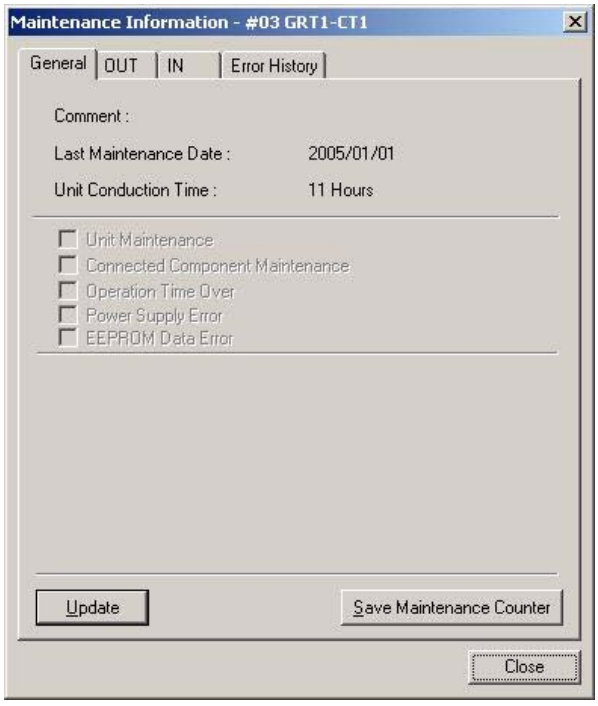

Item	Description
Comment	Displays up to 32 characters of text set as the Unit comment.
Last Maintenance Date	Displays the last maintenance date that was set.
Unit Conduction Time	Displays the total time that the Unit has been ON (cumulative power ON time).
Update Button	Click this button to update the maintenance information.
Save Maintenance Counter	This function saves the maintenance counter value in the Unit. If this function is used, the previous value will be retained when the power supply is turned OFF and ON again.

OUT Tab Page

Output terminals are listed in numerical order.

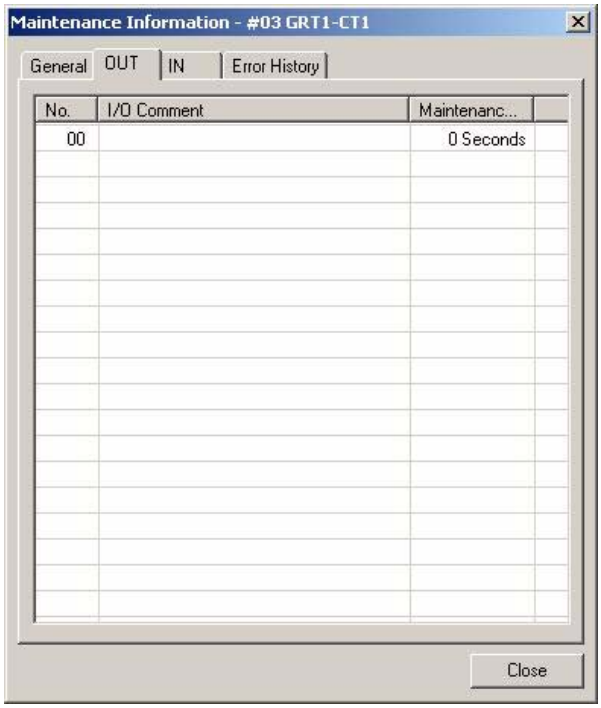

Item	Description
Comment	Displays up to 32 characters of text set as the output comment for each output.
Maintenance Counter	Displays the maintenance counter for each output. If the maintenance counter exceeds the threshold value, a warning icon will be displayed on the left side of the output's *No.* column. Total ON Time Monitor unit = seconds Contact Operation Counter unit = operations

IN Tab Page

Input terminals are listed in numerical order.

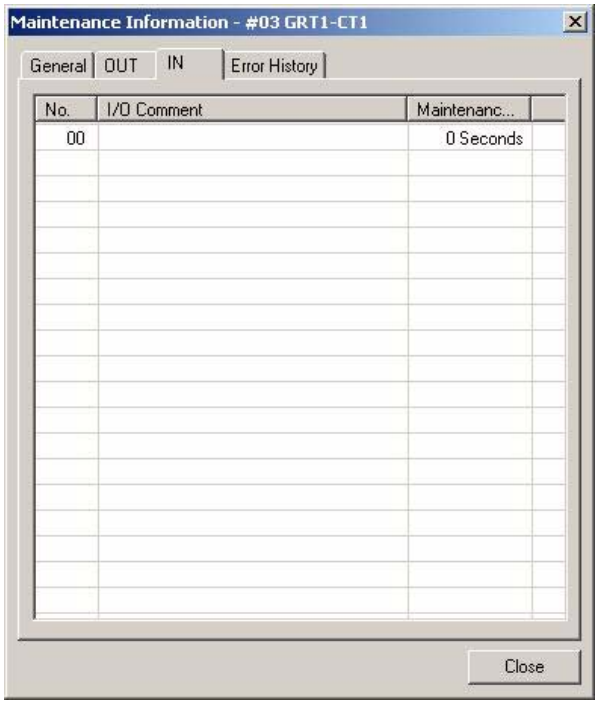

Item	Description
Comment	Displays up to 32 characters of text set as the comment for the input.
Maintenance Counter	Displays the maintenance counter for the input. If the maintenance counter exceeds the threshold value, a warning icon will be displayed on the left side of the input's *No.* column. The Total ON Time Monitor is given in seconds. The Contact Operation Counter is given as the number of operations.

Error History Tab Page

The most recent errors that have occurred are displayed.

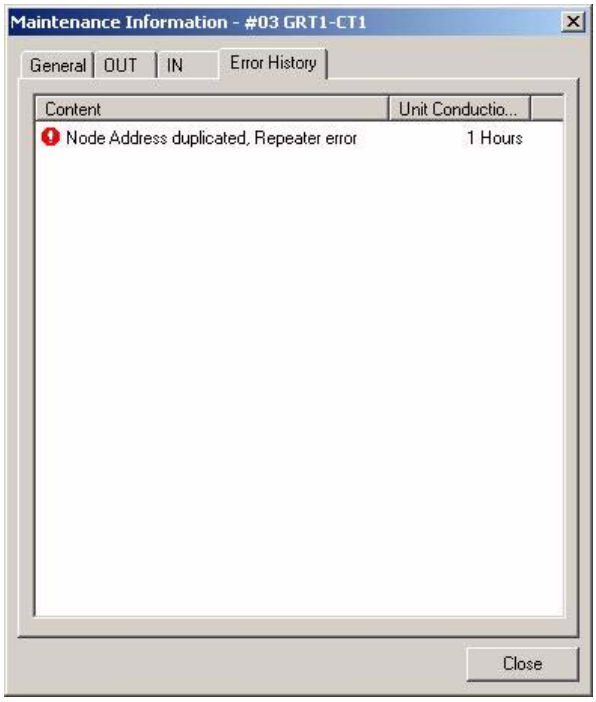

Item	Description
Content	Gives the contents of the communications errors that have occurred.
Unit Conduction Time	Gives the total time that the network power supply had been ON when the error occurred.

7-4 GRT1-CT1(-1) Counter Units

This section describes the GRT1-CT1 and GRT1-CT1-1 Counter Units.

7-4-1 Specifications

General Specifications

Item	Specification
Unit power supply voltage	24 VDC (20.4 to 26.4 VDC)
I/O power supply voltage	24 VDC (20.4 to 26.4 VDC)
Noise immunity	Conforms to IEC 61000-4-4, 2.0 kV (power lines)
Vibration resistance	10 to 60 Hz, 0.7-mm double amplitude; 60 to 150 Hz, 50 m/s^2
Shock resistance	150 m/s^2
Dielectric strength	500 VAC (between isolated circuits)
Insulation resistance	20 MΩ minimum (between isolated circuits)
Ambient operating temperature	–10 to 55°C (with no icing or condensation)
Ambient operating humidity	25% to 85%
Operating environment	No corrosive gases
Ambient storage temperature	–25 to 65°C (with no icing or condensation)
Mounting	35-mm DIN Track mounting

Performance Specifications

Item	Specification
Input points	2 counter inputs (A and B) and 1 settable input (Z input or digital input)
Output points	1 digital output (settable)
Counter resolution	32-bit
Maximum counter input frequency	60 kHz max. depending on the counter mode. Refer to *I/O Signal Specifications* on page 235 for details.
Overall response time	1 ms max. (See note.)
Isolation method	Photocoupler isolation between communications lines and inputs/output lines. No isolation between inputs signal lines and output signal lines.
I/O connection method	Screwless Terminal block

Note The response time is the time between the moment the A, B, Z, or IN input turns ON or OFF and the moment the digital output is updated to the new state. The specified response time may not be achieved during monitoring or maintenance.

I/O Signal Specifications

The encoder A and B inputs are phase differential signals for counting. The encoder Z input is a zero marker each revolution.

Inputs

Encoder A and B Inputs

Item	Specification	
Model	GRT1-CT1	GRT1-CT1-1
Input type	NPN	PNP
Number of inputs	2 (A and B encoder inputs)	
ON voltage	18.6 V min. (between input terminal and V)	18.6 V min. (between input terminal and G)
ON current	3.0 mA min.	
OFF voltage	4.0 V max. (between input terminal and V)	4.0 V max. (between input terminal and G)

Item	Specification
OFF current	1.0 mA max.
Maximum input signal frequency	60 kHz for pulse/direction counter mode 60 kHz for up/down counter mode 30 kHz for phase differential counter mode (×1, ×2, or ×4)

Encoder Z Input or Digital Input (IN)

Item	Specification	
Model	GRT1-CT1	GRT1-CT1-1
Input type	NPN	PNP
Number of inputs	1	
ON voltage	15.0 V min. (between input terminal and V)	15.0 V min. (between input terminal and G)
ON current	3.0 mA min.	
OFF voltage	5.0 V max. (between input terminal and V)	5.0 V max. (between input terminal and G)
OFF current	1.0 mA max.	
ON response time	1 ms max. (See note)	
OFF response time	1 ms max. (See note)	

Note The response time is the time between the moment the A, B, or Z/IN input turns ON or OFF and the moment the digital output is updated to the new state. The specified response time may not be achieved during monitoring or maintenance.

Digital Output (OUT)

Item	Specification	
Model	GRT1-CT1	GRT1-CT1-1
Output type	NPN	PNP
Number of outputs	1	
Total output current	500 mA max.	
Residual voltage	1.2 V max. (between output terminal and G)	1.2 V max. (between output terminal and V)
Leakage current	0.1 mA max.	0.1 mA max.
ON response time	1 ms max. (See note)	
OFF response time	1 ms max. (See note)	

Note The response time is the time between the moment the A, B, Z, or IN input turns ON or OFF and the moment the digital output is updated to the new state. The specified response time may not be achieved during monitoring or maintenance.

7-4-2 Hardware

Names and Functions of Parts

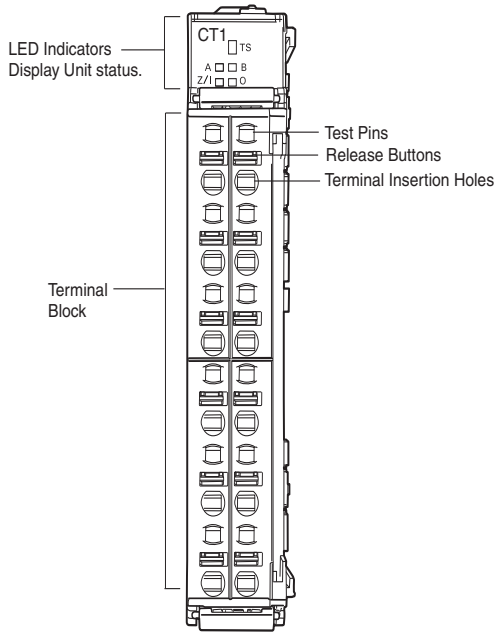

LED Indicators

The indicators on the front of the Counter Units are shown below.

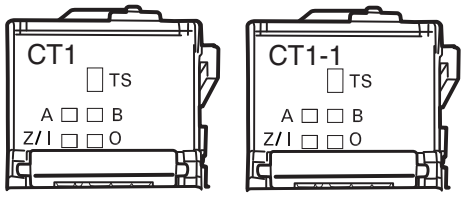

TS Indicators

The green and red TS indicators show the status of the Slice I/O Unit itself. Refer to *2-1-3 LED Indicators* for details.

I/O Indicators

The I/O indicators show the status of the counter inputs and digital I/O.

Name	Color	Indicator status		I/O status
A	Yellow		Lit	Input A is ON.
			Not lit	Input A is OFF.
B	Yellow		Lit	Input B is ON.
			Not lit	Input B is OFF.
Z/I	Yellow		Lit	Input Z or digital input is ON.
			Not lit	Input Z or digital input is OFF.
O	Yellow		Lit	The digital output is ON.
			Not lit	The digital output is OFF.

Hardware Settings

There are no hardware settings required for the Counter Units.

Internal Circuits

GRT1-CT1

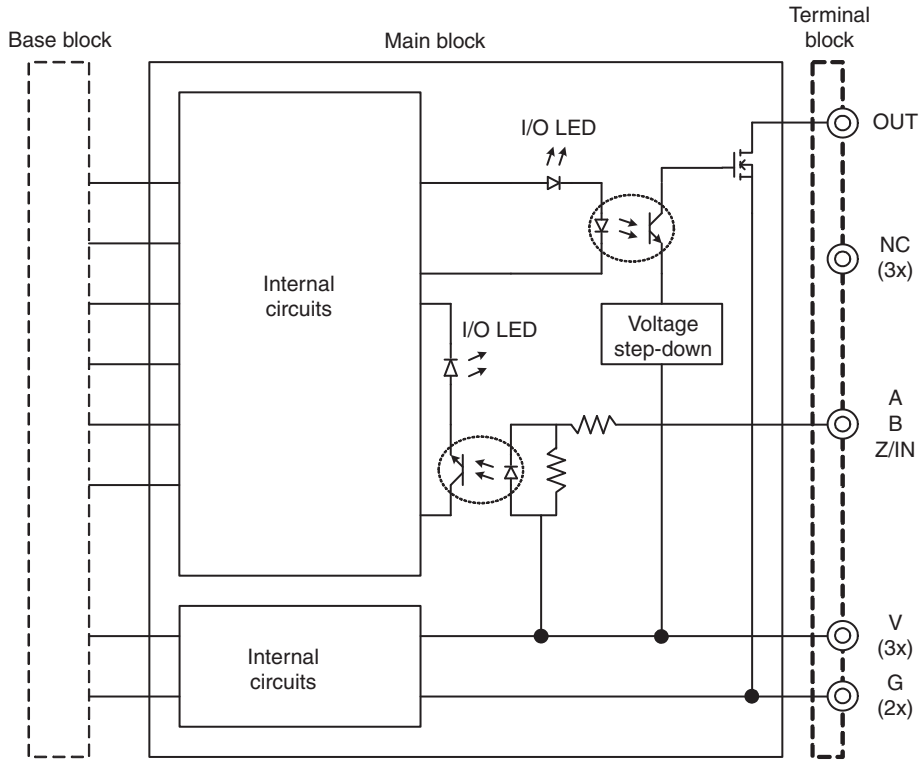

GRT1-CT1-1

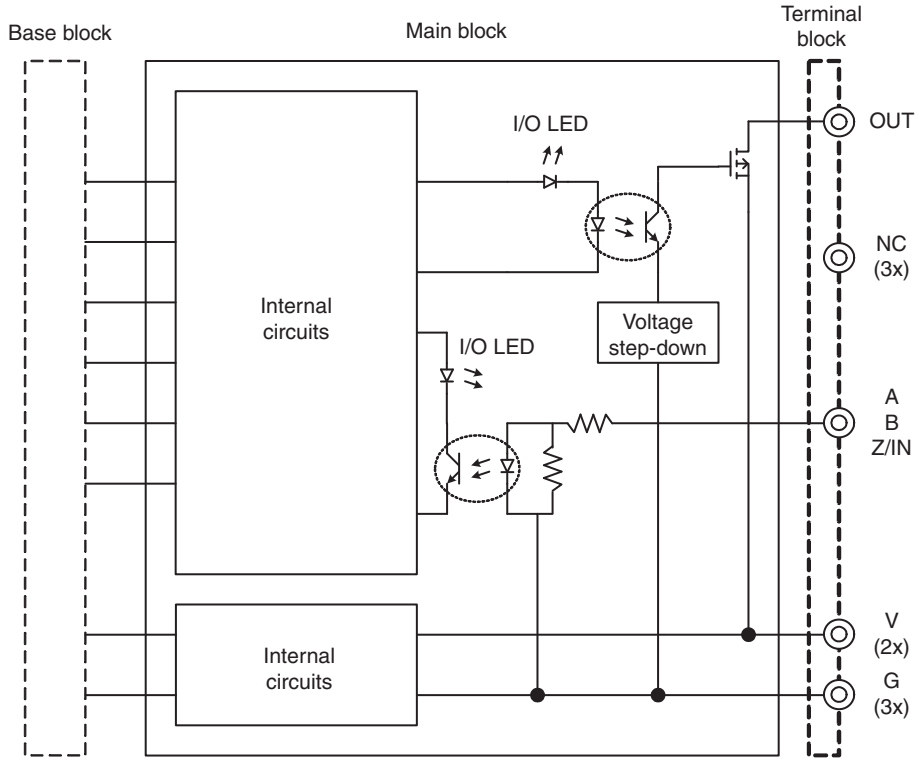

Wiring

Connect the terminals of the Counter Unit according to the following diagrams.

GRT1-CT1 (supports NPN)

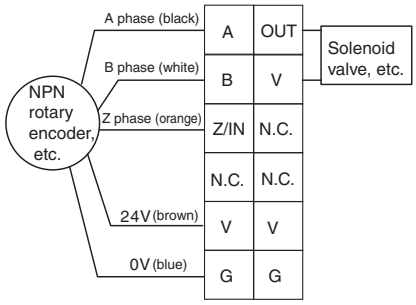

GRT1-CT1-1 (supports PNP)

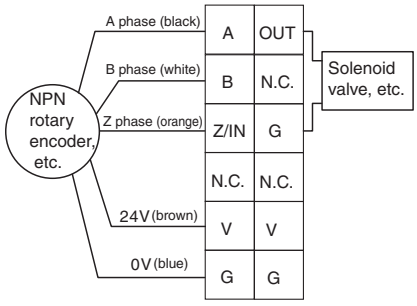

Dimensions (Unit: mm)

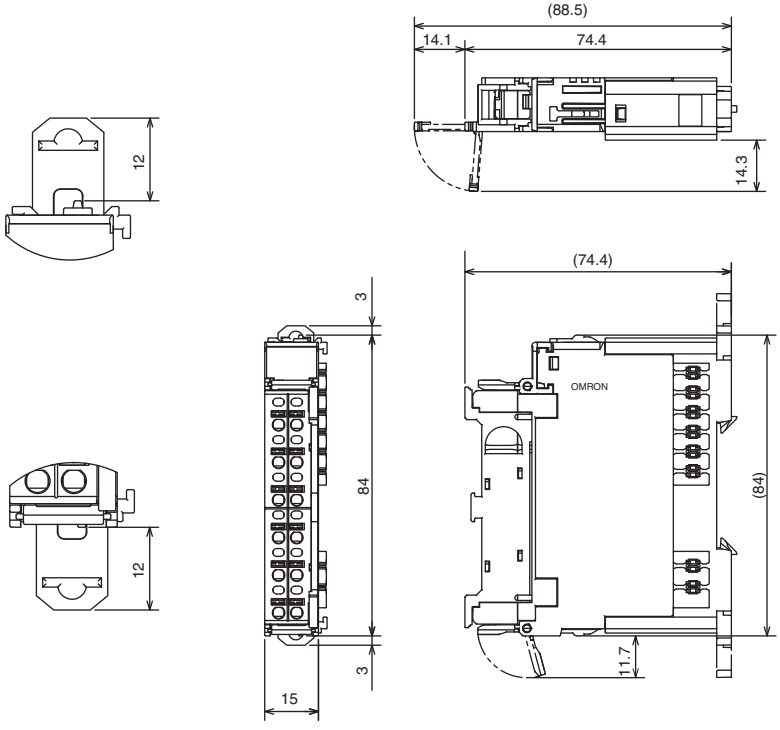

7-4-3 I/O Data Details

Output Data

The following table describes the data output from the Output Area allocated in the Master to the Counter Unit. This data is used to set and control the Counter Unit.

"n" is the first word in the Output Area allocated to the Counter Unit in the Master.

Words	Bits	Definition
n and n+1	00 to 15	Set Value The Set Value is set between –2,147,483,648 and 2,147,483,647. The Set Value will be transferred to the internal register specified by the Register Selection Bits (bits 00 to 02 of word n+2) when the Write Command Bit (bit 03 of word n+2) is turned ON.
n+2	00 to 02	Register Selection Bits These bits determine for which internal register the Set Value (words n and n+1) will be used when the Write Command Bit or Counter Data Display Command Bit (bit 03 or bit 04 of word n+2) is turned ON. Bit: 02 01 00 0 0 0 = Present Counter Value 0 0 1 = Present Frequency (frequency of A input signal in Hz) 0 1 0 = Capture Value Register 0 1 1 = Preset Value Register 1 0 0 = Range Value Register 0 (LL) 1 0 1 = Range Value Register 1 (UL) 1 1 0 = Not supported. 1 1 1 = Not supported.
	03	Write Command Bit (See note.) Turn ON this bit to write the Set Value (words n and n+1) to the internal register specified by the Register Selection Bits (bits 00 to 02 of word n+2). If the selected register is 000, 001, 010, 110, or 111, then nothing happens.
	04	Counter Data Display Command Bit (See note.) Turn ON this bit to change the register displayed in the Counter Data (words m and m+1) to the register specified by the Register Selection Bits (bits 00 to 02 of word n+2). The specified register will not change regardless of write actions.
	05	Digital Input Enable Bit This bit enables and disables the digital input. OFF: The function assigned to the digital input is disabled. ON: The function assigned to the digital input is enabled.
	06 and 07	Digital Input Counter Reset Mode Bits These bits set the counter reset mode for the digital input. Bit: 07 06 0 0 = Not supported. 0 1 = The counter value is reset to zero on first rising edge of the digital input. 1 0 = The counter value is reset to zero on every rising edge of the digital input. 1 1 = Not supported.
	08	Gate Control Bit This bit enables and disables the counter. OFF: Counting is enabled. ON: Counting is disabled (i.e., no pulses are counted), and the Present Counter Value will not change in response to encoder inputs. The Present Counter Value can be changed using a reset or preset command even when counting is disabled.
	09	Capture Command Bit (See note.) Turn ON this bit to store the Present Counter Value in the Capture Value Register.
	10	Preset Command Bit (See note.) Turn this bit ON (at time of starting) to set the Preset Value Register to the Present Counter Value.

Words	Bits	Definition
n+2 (continued)	11	Reset Command Bit (See note.) Turn ON this bit to reset the Present Counter Value to 0.
	12 and 13	Output Control Bits These bits control the digital output (OUT). Bit: 13 12 0 0 = Digital output controlled by range (LL and UL). 0 1 = Digital output turned OFF. 1 0 = Digital output turned ON. 1 1 = Digital output turned ON.
	14 and 15	Reserved.

Note Each command is executed only once when the command bit is turned ON. Command bits are not reset automatically and must be reset by the user. Make sure to reset the command bit after execution of the command has been completed (i.e., after the corresponding Completed Flag has turned ON in word m+2). Also, make sure that all command bits are OFF when the Unit is started, including starting a new Unit after Unit replacement.

Input Data

The following table describes the data input from Counter Unit to the Input Area allocated in the Master. This data is used to monitor counter data and Counter Unit operating status.

"m" is the first word in the Input Area allocated to the Counter Unit in the Master.

Word	Bits	Definition
m and m+1	00 to 15	Counter Data The data from the Counter Unit specified by the Register Selection Bits (bits 00 to 02 of word n+2) when the Counter Data Display Command Bit (bit 04 of n+2) was last turned ON is displayed here. Check the Display Register Indication Bits (bits 00 to 02 of word m+2) to verify what data is currently displayed here.
m+2	00 to 02	Display Register Indication Bits These bits indicate which register is displayed in words m and m+1. Bit: 02 01 00 0 0 0 = Present Counter Value 0 0 1 = Present Frequency (frequency of A input signal in Hz) 0 1 0 = Capture Value Register 0 1 1 = Preset Value Register 1 0 0 = Range Value Register (LL) 1 0 1 = Range Value Register (UL) 1 1 0 = Not supported 1 1 1 = Not supported "Not supported" means that no register is assigned to that bit combination.
	03	Write Command Completed Flag This flag turns ON when the Write Command has been completed (triggered by the Write Command Bit, bit 03 of word n+2). This flag will turn OFF when the Write Command Bit is reset.
	04	Multiple Commands Warning Flag This flag will turn ON if more than one of the following bits was turned ON at the same time: Word n+2, bits 03, 09, 10, and 11. The commands will be executed but the results may be unexpected.
	05	Reserved.
	06	Underflow Flag This flag will turn ON if the count value underflows. Counting will stop with the count value at the lower limit. The lower limit is –2,147,483,648. To restart counting, preset or reset the counter value. This flag will turn OFF when counting restarts.

Word	Bits	Definition
m+2 (continued)	07	Overflow Flag This flag will turn ON if the count value overflows. Counting will stop with the count value at the upper limit. The upper limit is 2,147,483,647. To restart counting, preset or reset the counter value. This flag will turn OFF when counting restarts.
	08	Counter Operation Flag This flag shows the status of counter operation. The counter operation can be controlled by the Gate Control Bit (bit 08 of word n+2). OFF: Stopped. ON: In progress.
	09	Capture Command Completed Flag This flag turns ON when the Capture Command has been completed (triggered by the Capture Command Bit, bit 09 of word n+2).This flag will turn OFF when the Capture Command Bit is reset.
	10	Preset Command Completed Flag This flag turns ON when the Preset Command has been completed (triggered by the Preset Command Bit, bit 10 of word n+2). This flag will turn OFF when the Preset Command Bit is reset.
	11	Reset Command Completed Flag This flag turns ON when the Reset Command has been completed (triggered by the Reset Command Bit, bit 11 of word n+2). This flag will turn OFF when the Reset Command Bit is reset.
	12	Digital Input (IN) Status Flag This flag shows the present status of the digital input. OFF: Low (OFF) ON: High (ON)
	13	Reserved.
	14	Digital Output Status Flag This flag shows the present status of the digital output. OFF: Low (OFF) ON: High (ON)
	15	Reserved.

7-4-4 Functions and Settings

The following functions are the same as those for the Digital I/O Units. Refer to the sections given below for details.

Function	Reference
I/O Power Supply Monitor	*4-4-1 I/O Power Supply Monitor*
Contact Operation Counter	*4-4-4 Contact Operation Counter*
Total ON Monitor Time	*4-4-5 Total ON Time Monitor*

Setting Special Counter Unit Functions

Counter Unit functions are set using the Edit Unit Parameters Window. The procedure for accessing the Edit Unit Parameters Windows depends on the Support Software that is being used. The procedure for DeviceNet Configurator (version 2.43 or higher) is given below as an example.

1,2,3... (1) Open the Network Configuration Window in the DeviceNet Configurator.

(2) Double-click the desired Slice I/O Terminal's icon or right-click the icon and select ***Parameters - Edit*** to display the Edit Device Parameters Window shown below.

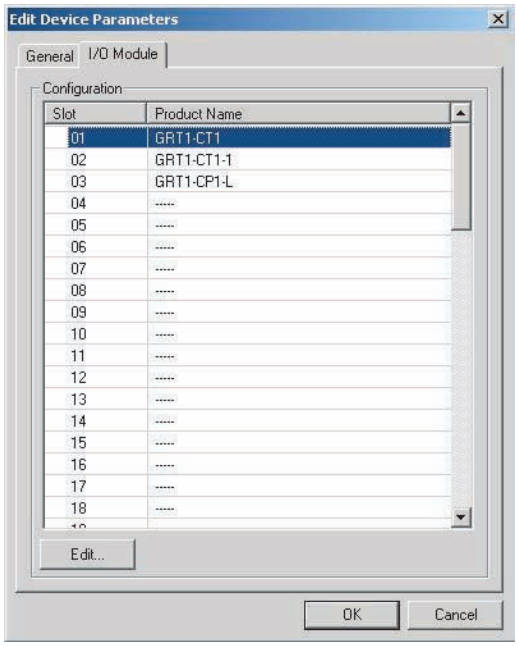

(3) Select the desired Counter Unit from the list on the *I/O Module* Tab Page and click the **Edit** Button. The Edit Unit Parameters Window will be displayed as shown below.

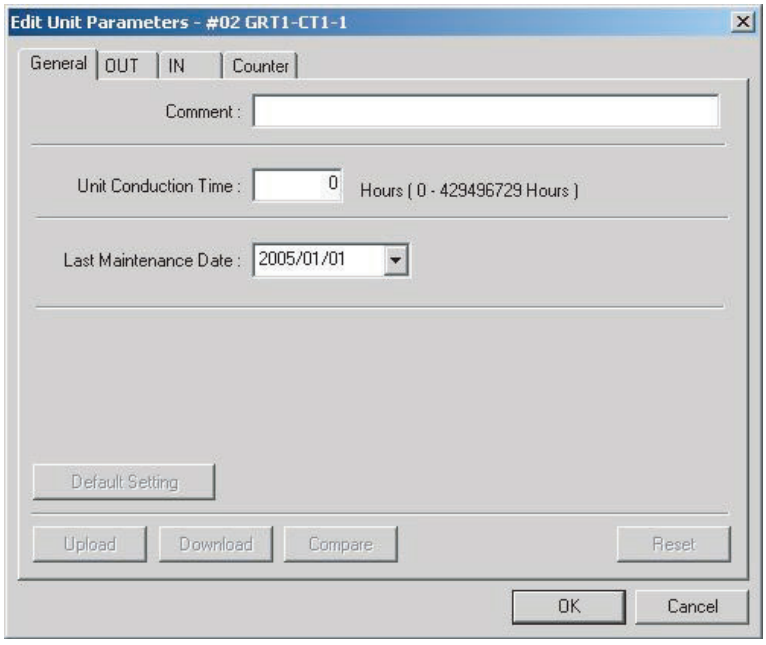

Functions Shared by All Units

Refer to the following sections for the items on the General Tab Page.

Function	Reference
Comment	*2-3-5 Unit Comments*
Unit Conduction Time	*2-3-4 Unit Conduction Time Monitor*
Last Maintenance Date	*2-3-8 Last Maintenance Date*

■ **Default Settings**

The Default Setting Button on the General Tab Page will download the default settings for all parameters on all tabs to the Counter Unit.

Setting Digital Output Functions

A Counter Unit supports one digital output. Use the following procedure to set functionality. The digital output can also be controlled according to the counter value in comparison to a user-set range. Refer to *Range 0 Tab Page* on page 250 for details.

1,2,3...

1. Click the **OUT** Tab in the Edit Unit Parameters Window to display the *OUT* Tab Page shown below.

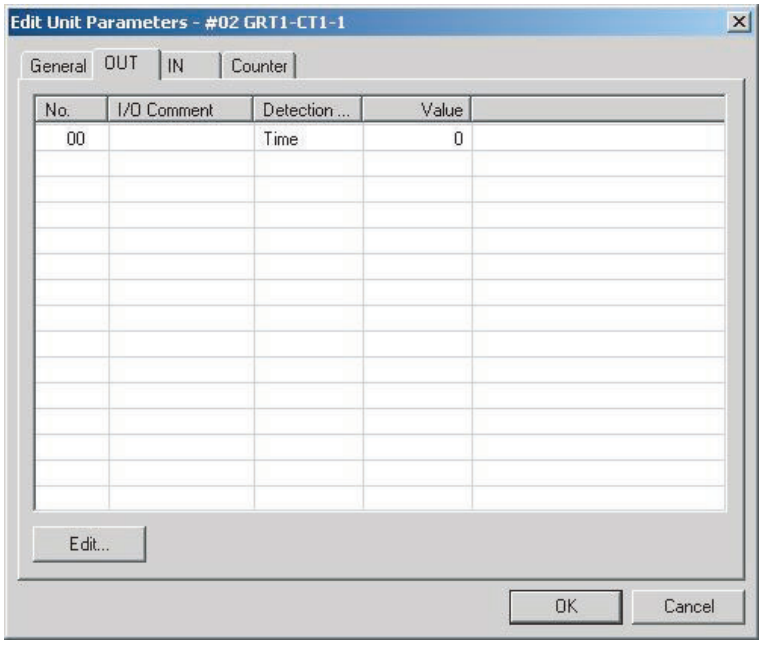

2. Select the digital output (No. 00) and click the **Edit** Button. The Edit Terminal Dialog Box will be displayed.

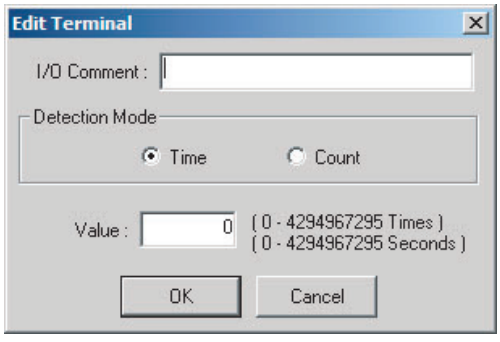

3. Set the items in the dialog box as shown in the following table.

Item	Description
I/O Comment	Enter a comment for the digital output.
Detection Mode	Specify whether to keep track of the total ON time (unit: s) or number of contact operations (unit: operations) for the maintenance counter of the digital output.
Value	Enter the set value for the detection mode. The value can be set to between 0 and 4,294,967,295 operations for the number of contact operations and to between 0 and 4,294,967,295 seconds for the total ON time.

The above settings are stored in non-volatile memory. If a setting is changed, the Counter Unit must be reset before the new setting will be valid.

Setting Digital Input Functions

A Counter Unit supports one digital input. Use the following procedure to set functionality. To set the functionality of the digital input rising and falling edges, refer to the *General Tab Page* on page 246.

1,2,3...

1. Click the **IN** Tab in the Edit Unit Parameters Window to display the *IN* Tab Page shown below.

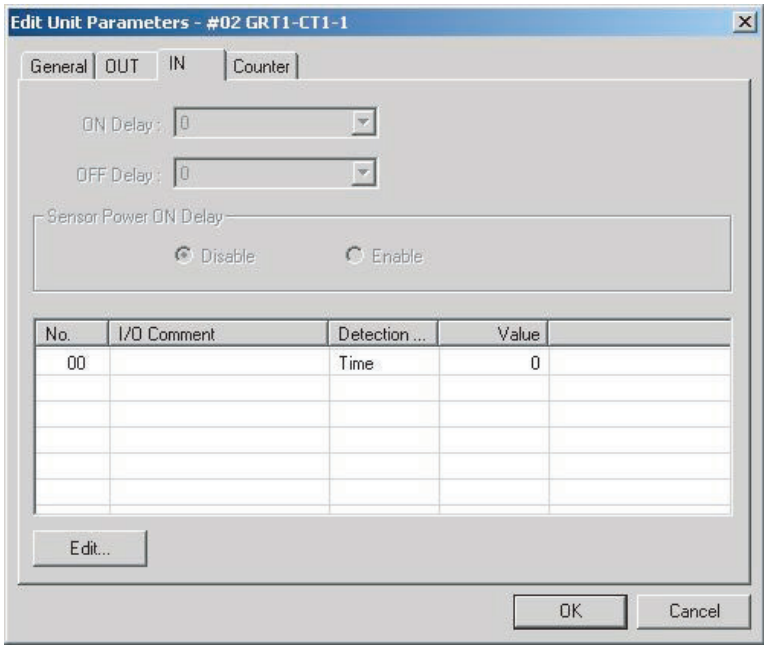

2. Select the digital input (No. 00) and click the **Edit** Button. The Edit Terminal Dialog Box will be displayed.

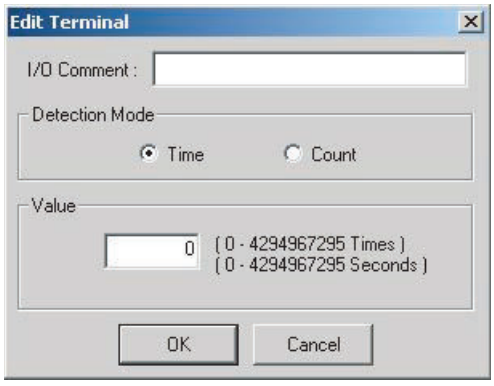

3. Set the items in the dialog box as shown in the following table.

Item	Description
I/O Comment	Enter a comment for the digital input.
Detection Mode	Specify whether to keep track of the total ON time (unit: s) or number of contact operations (unit: operations) for the maintenance counter of the digital input.
Value	Enter the set value for the detection mode. The value can be set to between 0 and 4,294,967,295 operations for the number of contact operations and to between 0 and 4,294,967,295 seconds for the total ON time.

The above settings are stored in non-volatile memory. If a setting is changed, the Counter Unit must be reset before the new setting will be valid.

Setting Counter Functions

A Counter Unit supports one counter input.

Click the **Counter** Tab in the Edit Unit Parameters Window to display the *Counter* Tab Page shown below.

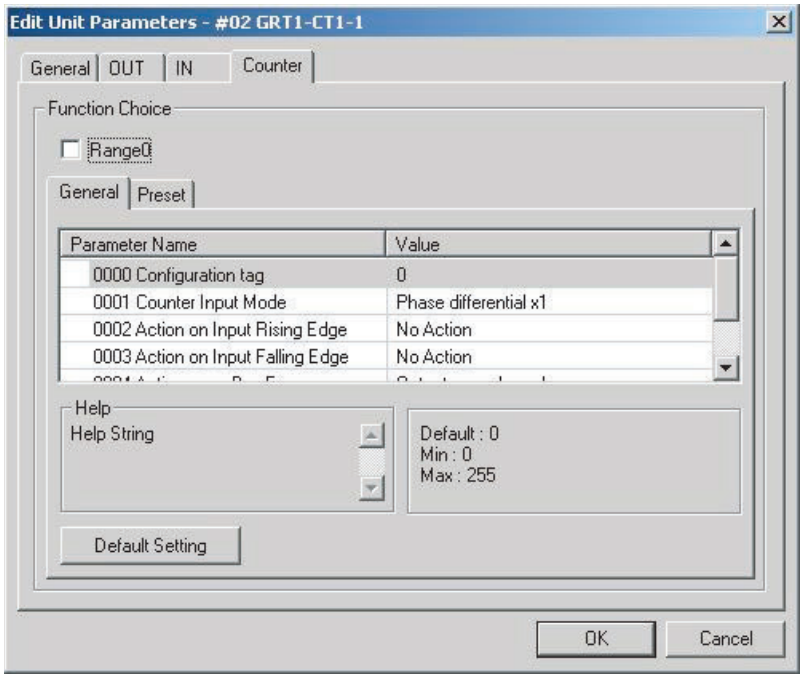

The Counter Tab Page contains up to three tab pages used to set various counter functionality. The Range 0 Tab Page appears only when the *Range 0* check box is selected.

Help

Help is provided at the bottom of each tab page inside the Counter Tab Page, along with the default setting and setting limits.

General Tab Page

The General Tab Page is used to set counter operating parameters, as described below.

These settings are stored in non-volatile memory. If a setting is changed, the Counter Unit must be reset before the new setting will be valid.

■ Configuration Tag

The configuration tag indicates the version of all the present counter parameter settings. The configuration tag can be used to manage the parameter settings as a group.

The user can set the configuration tag to any value between 0 and 255. The configuration tag is downloaded with the rest of the parameter settings to the Counter Unit and uploaded with the rest of the parameter settings from the Counter Unit.

■ Counter Input Mode

Select one of the following counter input modes.

Counter input mode	Description
Phase differential ×1	Phase-shifted pulses are received on inputs A and B. • When the pulses on input A lead the pulses on input B, the counter value is incremented on the rising edge of input A. • When the pulses on input B lead the pulses on input A, the counter value is decremented on the falling edge of input A.
Phase differential ×2	Phase-shifted pulses are received on inputs A and B. • When the pulses on input A lead the pulses on input B, the counter value is incremented on the rising and falling edges of input A. • When the pulses on input B lead the pulses on input A, the counter value is decremented on the rising and falling edges of input A.
Phase differential ×4	Phase-shifted pulses are received on inputs A and B. • When the pulses on input A lead the pulses on input B, the counter value is incremented on the rising and falling edge of both input A and input B. • When the pulses on input B lead the pulses on input A, the counter value is decremented on the rising and falling edge of both input A and input B.
Pulse and direction	Input A pulses are counted and input B determines the direction of counting. • While input B is ON, the counter value is incremented. • While input B is OFF, the counter value is decremented. • The counter value is changed on the rising edge of input A.
Up/down Counter	• The counter value is incremented when pulses are received on input A. • The counter value is decremented when pulses are received on input B. • The counter value is changed on the rising edge of input A or B.

Phase Differential Counting

The following figure illustrates the operation of phase differential counting.

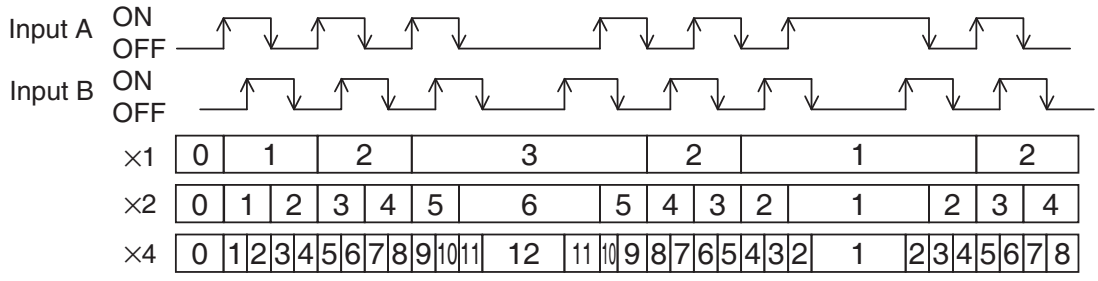

Pulse/Direction Counting

The following figure illustrates the operation of pulse/direction counting.

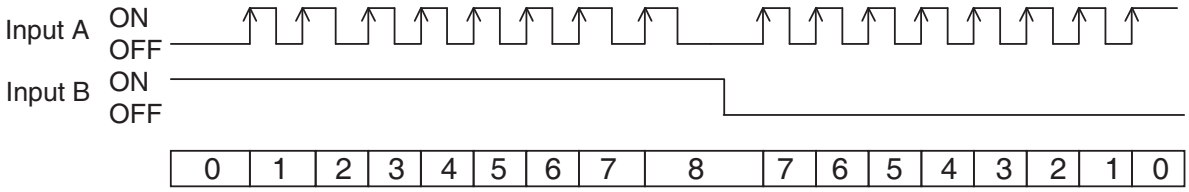

Up/Down Counting

The following figure illustrates the operation of up/down counting.

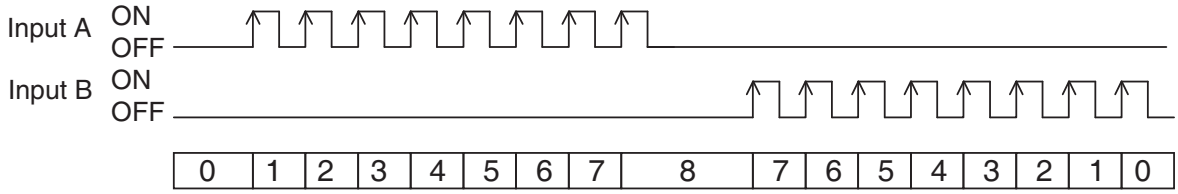

■ Action on Input Rising Edge and Action on Input Falling Edge

Select the action to be executed on the rising or falling edge of the digital input (Z-phase input).

Action	Description
No Action	No action is executed.
Capture	The Present Counter Value is stored in the Capture Value Register. The captured value can be retrieved at any time using the Counter Data Display Command Bit (bit 04 of word n+2).
Reset	The counter value is reset to 0.
Preset	The counter value is set to the preset value.

■ Action upon Bus Error

Select the action to be executed when a bus error occurs.

Action	Description
Outputs are Cleared	The output status will be cleared until the bus error is removed, but the counter value will still be updated according to the encoder inputs.
Outputs keep functionality	The output status will continue to be updated and the counter value will still be updated according to the encoder inputs.

■ Action upon Bus Idle

Select the action to be executed when the bus goes idle (i.e., when an error occurs in host communications, such as a DeviceNet or PROFIBUS error).

Action	Description
Outputs are Cleared	The output status will be cleared until the bus idle is removed, but the counter value will still be updated according to the encoder inputs.
Outputs keep functionality	The output status will continue to be updated and the counter value will still be updated according to the encoder inputs.

■ Default Settings

Press the **Default Setting** Button on the *General* Tab Page to set the following default values.

Setting	Default value
Counter Input Mode	Phase differential ×1
Action on Input Rising Edge	No Action
Action on Input Falling Edge	No Action

Setting	Default value
Action upon Bus Error	Outputs are cleared.
Action upon Bus Idle	Outputs are cleared.
Configuration tag	(Not affected.)

Preset Tab Page

The Preset Tab Page is used to set the counter to a preset value. The counter can be set to the preset value using the *Action on Input Rising Edge* or *Action on Input Falling Edge* setting for the digital input or using the Preset Command Bit (bit 10 of word n+2).

Click the **Preset** Tab in the Edit Unit Parameters Window. The *Preset* Tab Page will be displayed.

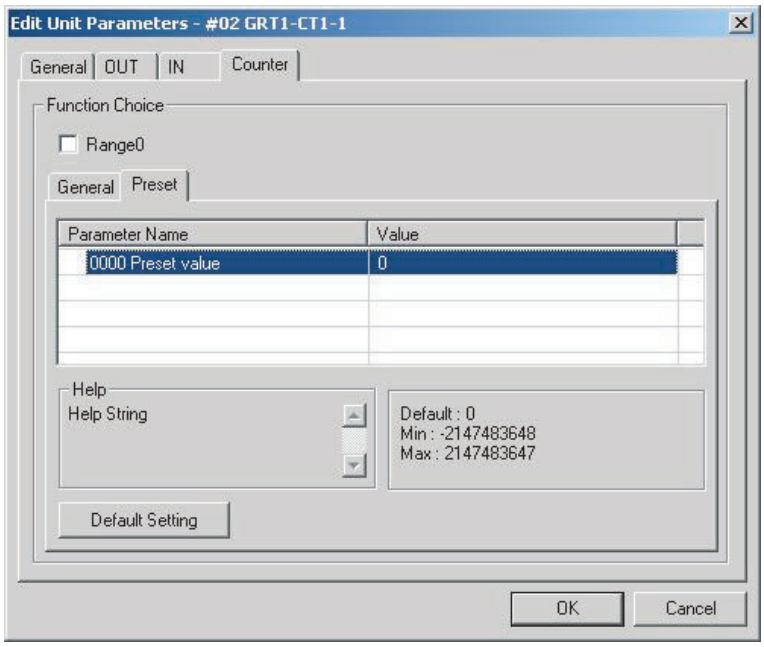

■ **Preset Value**

Set the *Preset value* Field to the desired preset value. The set value will be stored in the Preset Value Register.

The following figure shows how the preset value works. In this example, a fixed frequency is input from the encoder to the counter and the preset value is set to 1000.

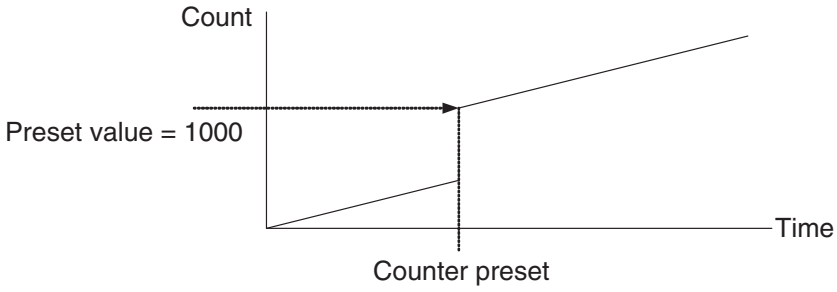

The preset value can be set to between –2,147,483,648 (8000 0000 hex) and 2,147,483,647 (7FFF FFFF hex).

This setting is stored in non-volatile memory. If the setting is changed, the new value is effective immediately.

■ Default Settings

Press the **Default Setting** Button on the *Preset* Tab Page to set the following default value.

Setting	Default value
Preset value	0

Range 0 Tab Page

The tab page to set a comparison range is displayed only when the range is enabled. Click the **Range 0** Button on the *Counter* Tab Page to enable using the range and display the *Range 0* Tab Page. The digital output will not be controlled by the comparison function unless a range is set.

Note The digital output will be controlled by the Range only when the Output Control Bits (bits 12 and 13 of word n+2) are OFF.

The Range 0 Tab Page is used to set a comparison range for the counter value. The range has a lower limit (LL) and an upper limit (UL). The digital output can be controlled according to the counter value in respect to this range.

Click the **Range 0** Tab in the Edit Unit Parameters Window. The *Range 0* Tab Page will be displayed.

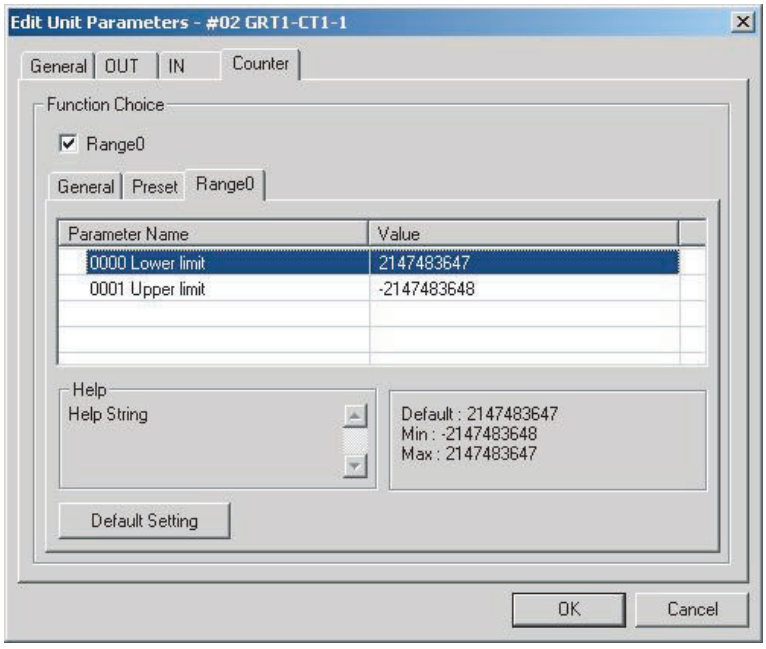

■ Operation

The output will be controlled according to the relationship between the counter value and the range settings as follows:

- If UL > LL, the digital output will be ON when LL ≤ Counter value ≤ UL, and will be OFF otherwise.
- If UL < LL, the digital output will be OFF when UL ≤ Counter value ≤ LL, and will be ON otherwise.
- If UL = LL, the digital output will be ON when LL = Counter value = UL, and will be OFF otherwise.

The following figures illustrate the first two cases.

Case 1: UL > LL

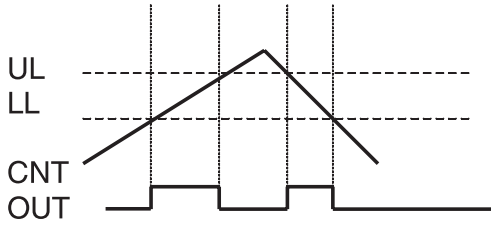

Case 2: UL < LL

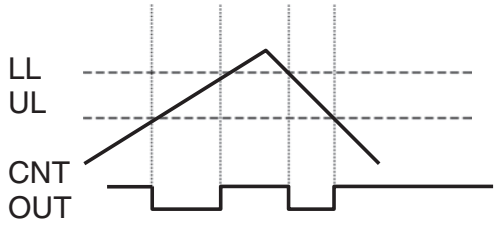

■ Setting a Comparison Range

Enter the desired values in the *Lower limit* and *Upper limit* Fields. The values can be between –2,147,483,648 (8000 0000 hex) and 2,147,483,647 (7FFF FFFF hex).

These settings are stored in non-volatile memory. If a setting is changed, the new value is effective immediately.

The range will be disabled if the range values are set to the minimum and maximum values.

■ Default Settings

Press the **Default Setting** Button on the *Range 0* Tab Page to set the following default values.

Setting	Default value
Range 0	Disabled. (Option not selected.)

7-5 GRT1-CP1-L Positioning Unit

This section describes the GRT1-CP1-L Positioning Unit.

7-5-1 Specifications

General Specifications

Item	Specification
Unit power supply voltage	24 VDC (20.4 to 26.4 VDC)
I/O power supply voltage	24 VDC (20.4 to 26.4 VDC)
Noise immunity	Conforms to IEC 61000-4-4, 2.0 kV (power lines)
Vibration resistance	10 to 60 Hz, 0.7-mm double amplitude; 60 to 150 Hz, 50 m/s^2
Shock resistance	150 m/s^2
Dielectric strength	500 VAC (between isolated circuits)
Insulation resistance	20 MΩ minimum (between isolated circuits)
Ambient operating temperature	–10 to 55°C (with no icing or condensation)
Ambient operating humidity	25% to 85%
Operating environment	No corrosive gases
Ambient storage temperature	–25 to 65°C (with no icing or condensation)
Mounting	35-mm DIN Track mounting

Performance Specifications

Item	Specifications
Input points	3 counter inputs (A, B, and Z) and 1 digital input
Output points	2 digital outputs (settable)
Signal levels for A, B, and Z counter inputs	24 V or line driver interface Set using a DIP switch. Refer to *Hardware Settings* on page 255.
Counter resolution	32-bit
Maximum pulse input frequency	100 kHz max. depending on the counter mode. Refer to *I/O Signal Specifications* on page 252 for details.
Overall response time	1 ms max. (See note.)
Isolation method	Photocoupler isolation between communications lines and inputs/output lines. 24-V interface: No isolation between input A, input B, input Z, digital input (IN), and digital outputs (OUT0 and OUT1). Line-driver interface: Isolation between inputs A, B, and Z. No isolation between digital input (IN) and digital outputs (OUT0 and OUT1).
I/O connection method	Screwless Terminal block

Note The response time is the time between the moment the A, B, Z, or IN input turns ON or OFF and the moment the digital output is updated to the new state. The specified response time may not be achieved during monitoring or maintenance.

I/O Signal Specifications

The encoder A and B inputs are phase differential signals for counting. The encoder input Z is a zero marker each revolution. The A, B and Z inputs may be either 24 V or line driver levels according to the DIP switch setting. Refer to *Hardware Settings* on page 255.

Encoder A, B, and Z Inputs

24 V Inputs

Item	Specification
Input type	PNP
Number of inputs	3 (encoder inputs A, B, and Z)
ON voltage	18.6 VDC min. (between input terminal and G terminal)
ON current	3.0 mA min.
OFF voltage	4.0 VDC max. (between input terminal and G terminal)
OFF current	1.0 mA max.
Maximum input signal frequency	60 kHz for pulse/direction counter mode 60 kHz for up/down counter mode 30 kHz for phase differential counter mode (×1, ×2, or ×4)

Line Driver Inputs

Item	Specification
ON voltage	2.0 VDC min. (RS-422 line driver-compatible level)
OFF voltage	0.8 VDC max. (RS-422 line driver-compatible level)
Number of inputs	3 (encoder inputs A, B, and Z)
Maximum input signal frequency	100 kHz for pulse/direction counter mode 100 kHz for up/down counter mode 50 kHz for phase differential counter mode (×1, ×2, or ×4)

Digital Input (IN)

Item	Specification
Input type	PNP
Number of inputs	1
ON voltage	15.0 VDC min. (between input terminal and G terminal)
ON current	3.0 mA min.
OFF voltage	5.0 VDC max. (between input terminal and G terminal)
OFF current	1.0 mA max.
ON response time	1 ms max. (See note.)
OFF response time	1 ms max. (See note.)

Note The response time is the time between the moment the A, B, Z, or IN input turns ON or OFF and the moment the digital output is updated to the new state. The specified response time may not be achieved during monitoring or maintenance.

Digital Outputs (OUT0 and OUT1)

Item	Specification
Output type	PNP
Number of outputs	2
Total output current	500mA max.
Residual voltage	1.2 V max.
Leakage current	0.1 mA max.
ON response time	1 ms max. (See note.)
OFF response time	1 ms max. (See note.)
Output short-circuit protection	None
Off-wire detection	None

Note The response time is the time between the moment the A, B, Z or IN input turns ON or OFF and the moment the digital output is updated to the new state. The specified response time may not be achieved during monitoring or maintenance.

7-5-2 Hardware

Names and Functions of Parts

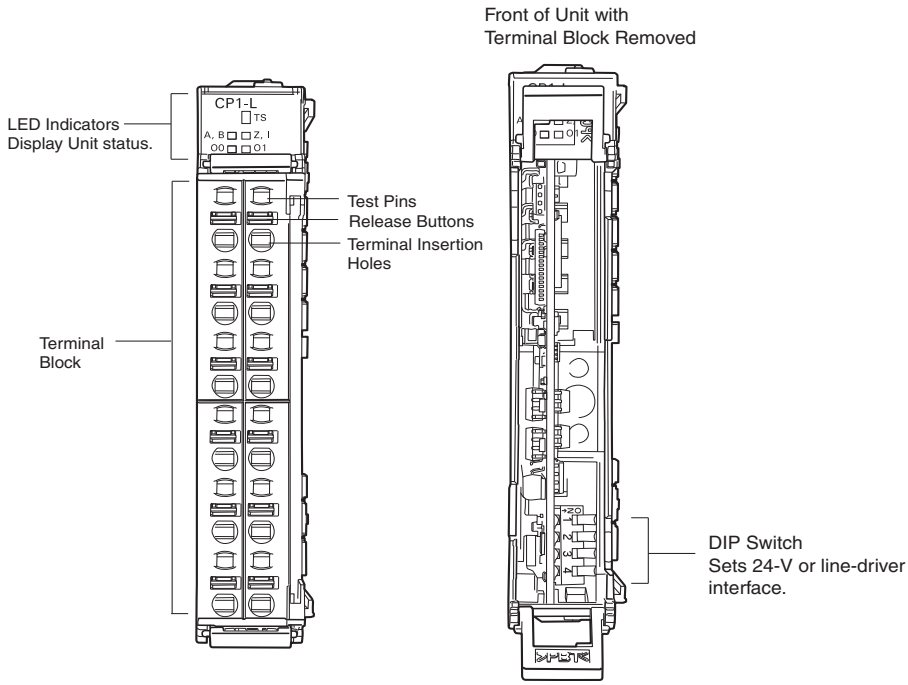

LED Indicators

The indicators on the front of the Positioning Unit are shown below.

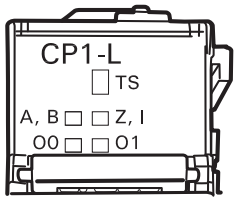

TS Indicators

The green and red TS indicators show the status of the Slice I/O Unit itself. Refer to *2-1-3 LED Indicators* for details.

I/O Indicators

The I/O indicators show the status of the counter inputs and digital I/O.

Inputs A and B from the rotary encoder share one indicator. Input Z from the rotary encoder and the digital input (IN) also share one indicator. The shared indicators are controlled via an exclusive-OR of the two inputs, e.g., the indicator is OFF when both inputs are ON or both inputs are OFF.

The two digital outputs each have a separate indicator. The I/O Indicators are described in the following table.

Name	Color	Indicator status	I/O status
A, B	Yellow	Lit	Either input A or input B is ON and the other input is OFF.
		Not lit	Inputs A and B are either both ON or both OFF.

Name	Color	Indicator status	I/O status
Z, I	Yellow	Lit	Either input Z or the digital input is ON and the other input is OFF.
		Not lit	Input Z and the digital input are either both ON or both OFF.
O0	Yellow	Lit	Digital output 0 is ON.
		Not lit	Digital output 0 is OFF.
O1	Yellow	Lit	Digital output 1 is ON.
		Not lit	Digital output 1 is OFF.

Hardware Settings

The DIP switch on the board inside the Positioning Unit must be set to select the required interface. Either a 24-V or line driver interface can be used.

DIP switch setting	Interface
All pins ON	24 V
All pins OFF	Line driver

The DIP switch is accessed as shown below. It has four pins.

Release the lock levers and pull out the terminal block.

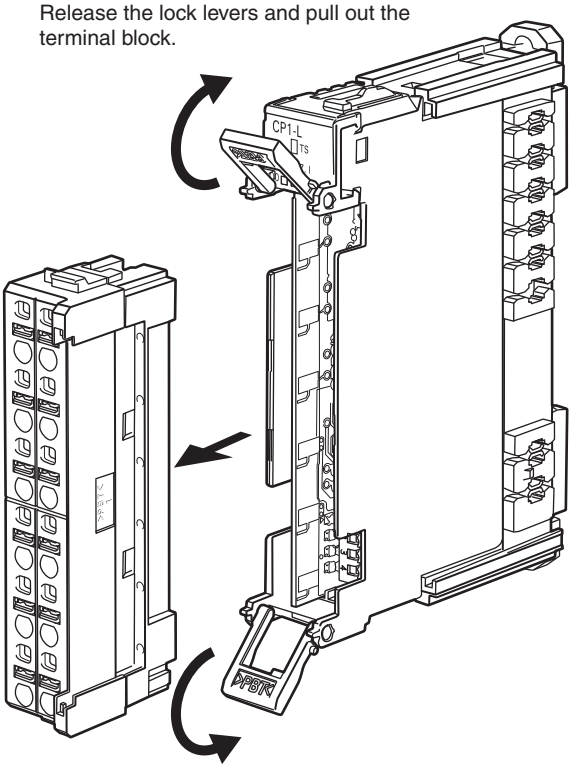

Set the interface on the DIP switch inside the Positioning Unit. Use a flat-blade screwdriver to similar tool to make setting the pins easier.

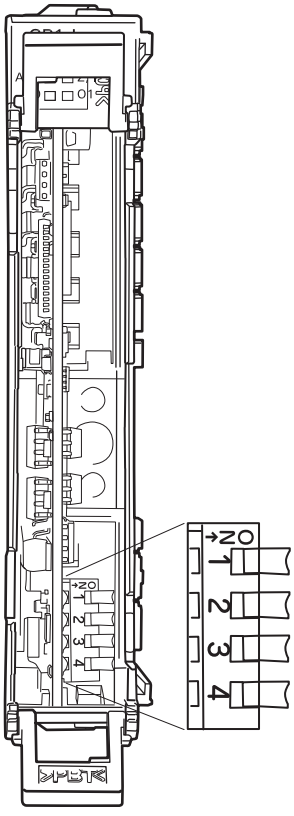

Internal Circuits

GRT1-CP1-L Set to 24 V Mode

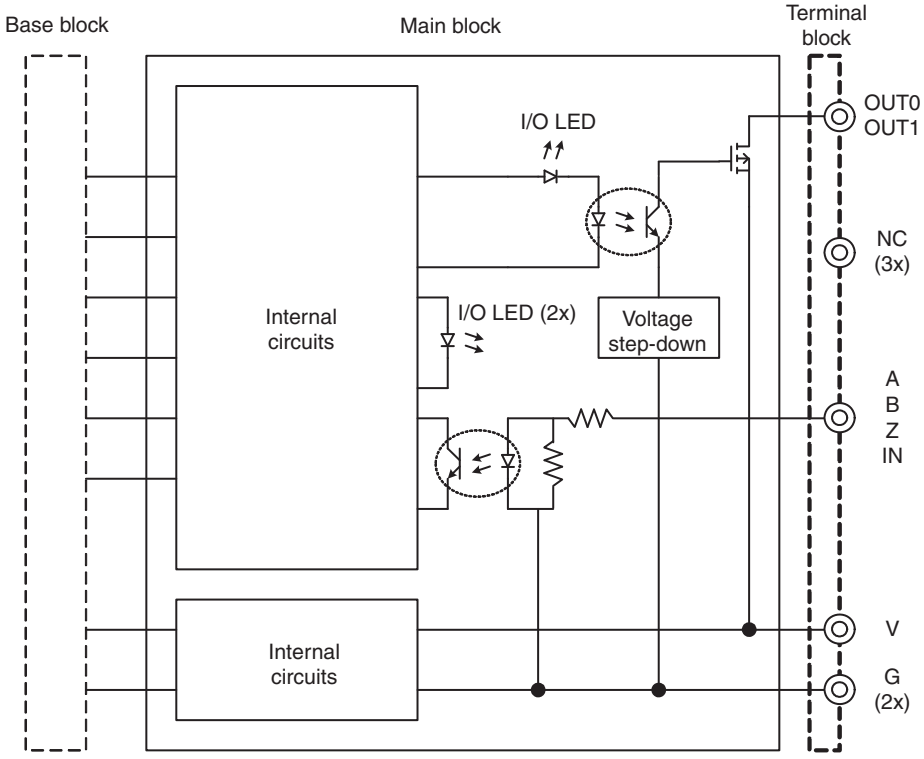

GRT1-CP1-L Set to Line Driver Mode

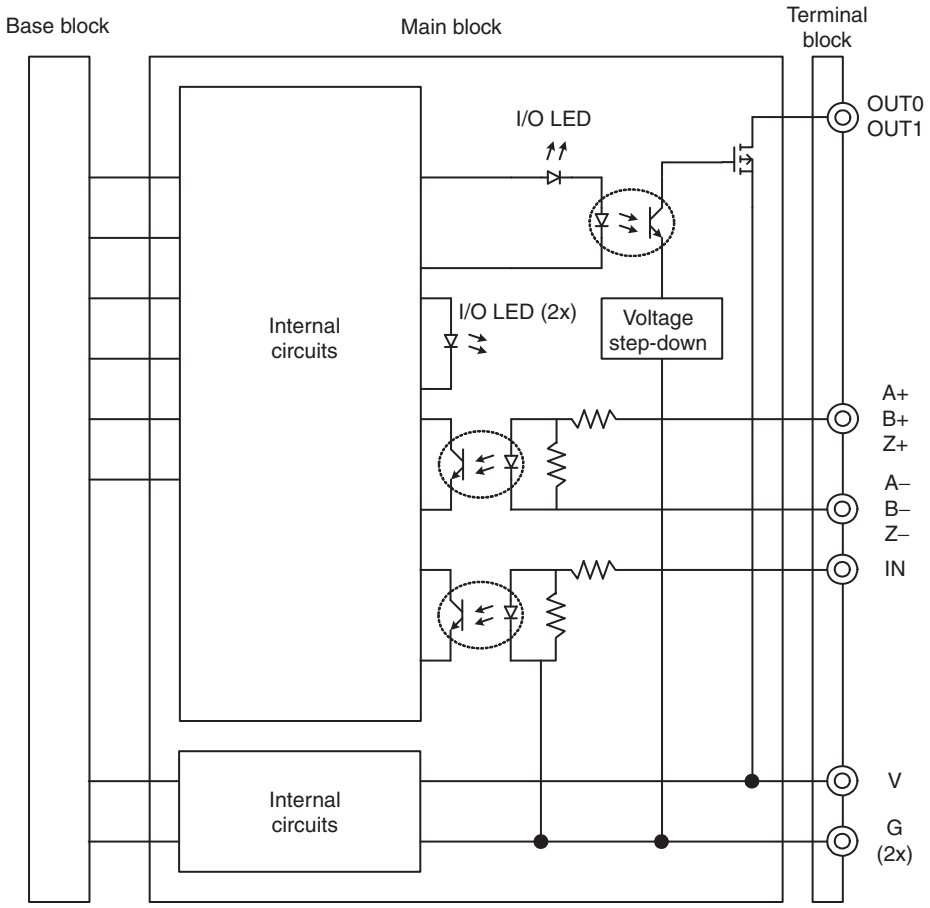

Wiring

Connect the terminals of the Positioning Unit according to the following diagrams. The connections depend on the counter input signal interface that is set.

24-V rotary encoder
(all DIP switch pins ON)

A	N.C.
B	N.C.
Z	N.C.
IN	OUT0
V	OUT1
G	G

Line driver rotary encoder
(all DIP switch pins OFF)

A+	A–
B+	B–
Z+	Z–
IN	OUT0
V	OUT1
G	G

Dimensions (Unit: mm)

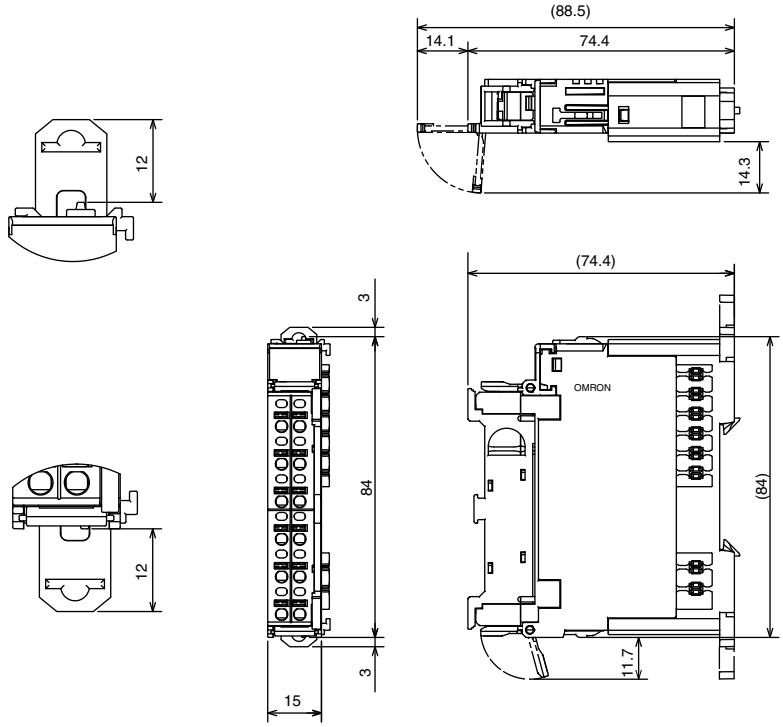

7-5-3 I/O Data Details

Output Data

The following table describes the data output from the Output Area allocated in the Master to the Positioning Unit. This data is used to set and control the Positioning Unit.

"n" is the first word in the Output Area allocated to the Counter Unit in the Master.

Word	Bits	Definition
n and n+1	00 to 15	Set Value The Set Value is set between –2,147,483,648 and 2,147,483,647. The Set Value will be transferred to the internal register specified by the Register Selection Bits (bits 00 to 02 of word n+2) when the Write Command Bit (bit 03 of word n+2) is turned ON.
n+2	00 to 02	Register Selection Bits These bits determine for which internal register the Set Value (words n and n+1) will be used when the Write Command Bit or Counter Data Display Command Bit (bit 03 or bit 04 of word n+2) is turned ON. Bit: 02 01 00 0 0 0 = Present Counter Value 0 0 1 = Present Frequency (frequency of A input signal in Hz) 0 1 0 = Capture Value Register 0 1 1 = Preset Value Register 1 0 0 = Range Value Register 0 (LL0) 1 0 1 = Range Value Register 1 (UL0) 1 1 0 = Range Value Register 0 (LL1) 1 1 1 = Range Value Register 1 (UL1)
	03	Write Command Bit (See note.) Turn ON this bit to write the Set Value (words n and n+1) to the internal register specified by the Register Selection Bits (bits 00 to 02 of word n+2). If the selected register is 000, 001, or 010, then nothing happens.

Word	Bits	Definition
n+2 (contin-ued)	04	Counter Data Display Command Bit (See note.) Turn ON this bit to change the register displayed in the Counter Data (words m and m+1) to the register specified by the Register Selection Bits (bits 00 to 02 of word n+2). The specified register will not change regardless of write actions.
	05	Digital Input Enable Bit This bit enables and disables the digital input. OFF: The function assigned to the digital input is disabled. ON: The function assigned to the digital input is enabled.
	06 and 07	Z Input Counter Reset Mode Bits These bits set the counter reset mode for the Z input. Bit: 07 06 0 0 = Z input is ignored 0 1 = The counter value is reset to zero on first rising edge of the Z input. 1 0 = The counter value is reset to zero on every rising edge of the Z input. 1 1 = The counter value is reset to zero on every rising edge of the Z input if the digital input (IN) is ON.
	08	Gate Control Bit This bit enables and disables the counter. OFF: Counting is enabled. ON: Counting is disabled (i.e., no pulses are counted), and the Present Counter Value will not change in response to encoder inputs. The Present Counter Value can be changed using a reset or preset command even when counting is disabled.
	09	Capture Command Bit (See note.) Turn ON this bit to store the Present Counter Value in the Capture Value Register.
	10	Preset Command Bit (See note.) Turn ON this bit to set the Preset Value Register to the Present Counter Value.
	11	Reset Command Bit (See note.) Turn ON this bit to reset the Present Counter Value to 0.
	12 and 13	Output 0 Control Bits These bits control digital output 0 (OUT0). Bit: 13 12 0 0 = Digital output 0 controlled by range 0 (LL0 and UL0). 0 1 = Digital output 0 turned OFF. 1 0 = Digital output 0 turned ON. 1 1 = Digital output 0 turned ON.
	14 and 15	Output 1 Control Bits These bits control digital output 1 (OUT1). Bit: 15 14 0 0 = Digital output 1 controlled by range 1 (LL1 and UL1). 0 1 = Digital output 1 turned OFF. 1 0 = Digital output 1 turned ON. 1 1 = Digital output 1 turned ON.

Note Each command is executed only once when the command bit is turned ON. Command bits are not reset automatically and must be reset by the user. Make sure to reset the command bit after execution of the command has been completed (i.e., after the corresponding Completed Flag has turned ON in word m+2). Also, make sure that all command bits are OFF when the Unit is started, including when starting a new Unit after Unit replacement.

Input Data

The following table describes the data input from Positioning Unit to the Input Area allocated in the Master. This data is used to monitor counter data and Positioning Unit operating status.

"m" is the first word in the Input Area allocated to the Counter Unit in the Master.

Words	Bits	Definition
m and m+1	00 to 15	Counter Data The data from the Counter Unit specified by the Register Selection Bits (bits 00 to 02 of word n+2) when the Counter Data Display Command Bit (bit 04 of n+2) was last turned ON is displayed here. Check the Display Register Indication Bits (bits 00 to 02 of word m+2) to verify what data is currently displayed here.
m+2	00 to 02	Display Register Indication Bits These bits indicate which register is displayed in words m and m+1. Bit: 02 01 00 0 0 0 = Present Counter Value 0 0 1 = Present Frequency (frequency of A input signal in Hz) 0 1 0 = Capture Value Register 0 1 1 = Preset Value Register 1 0 0 = Range Value Register 0 (LL0) 1 0 1 = Range Value Register 0 (UL0) 1 1 0 = Range Value Register 1 (LL1) 1 1 1 = Range Value Register 1 (UL1)
	03	Write Command Completed Flag This flag turns ON when the Write Command has been completed (triggered by the Write Command Bit, bit 03 of word n+2). This flag will turn OFF when the Write Command Bit is reset.
	04	Multiple Commands Warning Flag This flag will turn ON if more than one of the following bits was turned ON at the same time: Word n+2, bits 03, 09, 10, and 11. The commands will be executed but the results may be unexpected.
	05	Reserved.
	06	Underflow Flag This flag will turn ON if the count value underflows. Counting will stop with the count value at the lower limit. The lower limit is –2,147,483,648. To restart counting, preset or reset the counter value. This flag will turn OFF when counting restarts.
	07	Overflow Flag This flag will turn ON if the count value overflows. Counting will stop with the count value at the upper limit. The upper limit is 2,147,483,647. To restart counting, preset or reset the counter value. This flag will turn OFF when counting restarts.
	08	Counter Operation Flag This flag shows the status of counter operation. The counter operation can be controlled by the Gate Control Bit (bit 08 of word n+2). OFF: Stopped. ON: In progress.
	09	Capture Command Completed Flag This flag turns ON when the Capture Command has been completed (triggered by the Capture Command Bit, bit 09 of word n+2).This flag will turn OFF when the Capture Command Bit is reset.
	10	Preset Command Completed Flag This flag turns ON when the Preset Command has been completed (triggered by the Preset Command Bit, bit 10 of word n+2). This flag will turn OFF when the Preset Command Bit is reset.
	11	Reset Command Completed Flag This flag turns ON when the Reset Command has been completed (triggered by the Reset Command Bit, bit 11 of word n+2). This flag will turn OFF when the Reset Command Bit is reset.

Words	Bits	Definition
m+2 (continued)	12	Digital Input (IN) Status Flag This flag shows the present status of the digital input. OFF: Low (OFF) ON: High (ON)
	13	Encoder Input Z Status Flag This flag shows the present status of the encoder Z input. OFF: Low (OFF) ON: High (ON)
	14	Digital Output 0 (OUT0) Status Flag This flag shows the present status of digital output 0. OFF: Low (OFF) ON: High (ON)
	15	Digital Output 1 (OUT1) Status Flag This flag shows the present status of digital output 1. OFF: Low (OFF) ON: High (ON)

7-5-4 Functions and Settings

The following functions are the same as those for the Digital I/O Units. Refer to the sections given below for details.

Function	Reference
I/O Power Supply Monitor	*4-4-1 I/O Power Supply Monitor*
Contact Operation Counter	*4-4-4 Contact Operation Counter*
Total ON Monitor Time	*4-4-5 Total ON Time Monitor*

Setting Special Positioning Unit Functions

Positioning Unit functions are set using the Edit Unit Parameters Window. The procedure for accessing the Edit Unit Parameters Windows depends on the Support Software that is being used. The procedure for DeviceNet Configurator (version 2.43 or higher) is given below as an example.

1,2,3...

(1) Open the Network Configuration Window in the DeviceNet Configurator.

(2) Double-click the desired Slice I/O Terminal's icon or right-click the icon and select ***Parameters - Edit*** to display the Edit Device Parameters Window shown below.

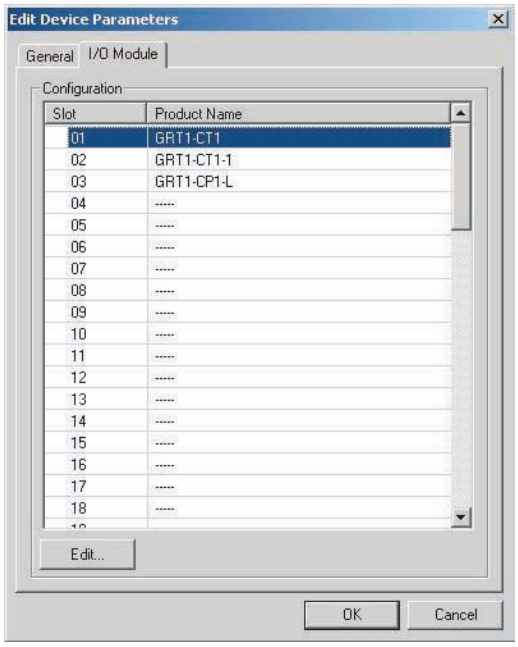

(3) Select the desired Positioning Unit from the list on the *I/O Module* Tab Page and click the **Edit** Button. The Edit Unit Parameters Window will be displayed as shown below.

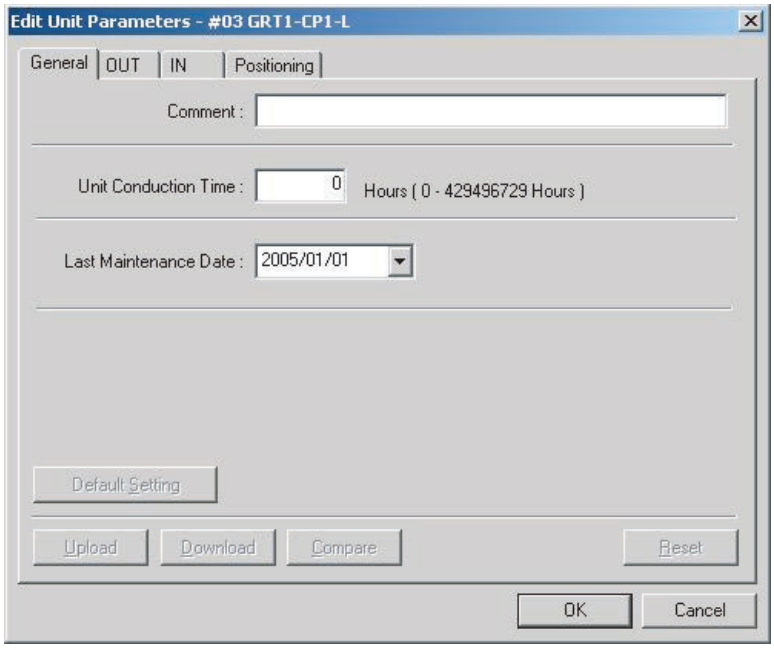

Functions Shared by All Units

Refer to the following sections for the items on the General Tab Page.

Function	Reference
Comment	*2-3-5 Unit Comments*
Unit Conduction Time	*2-3-4 Unit Conduction Time Monitor*
Last Maintenance Date	*2-3-8 Last Maintenance Date*

■ Default Settings

The Default Setting Button on the General Tab Page will download the default settings for all parameters on all tabs to the Positioning Unit. The values on the tab pages will not be updated.

Setting Digital Output Functions

A Positioning Unit supports two digital outputs. Use the following procedure to set functionality. The digital outputs can also be controlled according to the counter value in comparison to user-set ranges. Refer to *Range 0 and Range 1 Tab Pages* on page 269 for details.

1,2,3...

1. Click the **OUT** Tab in the Edit Unit Parameters Window to display the *OUT* Tab Page shown below.

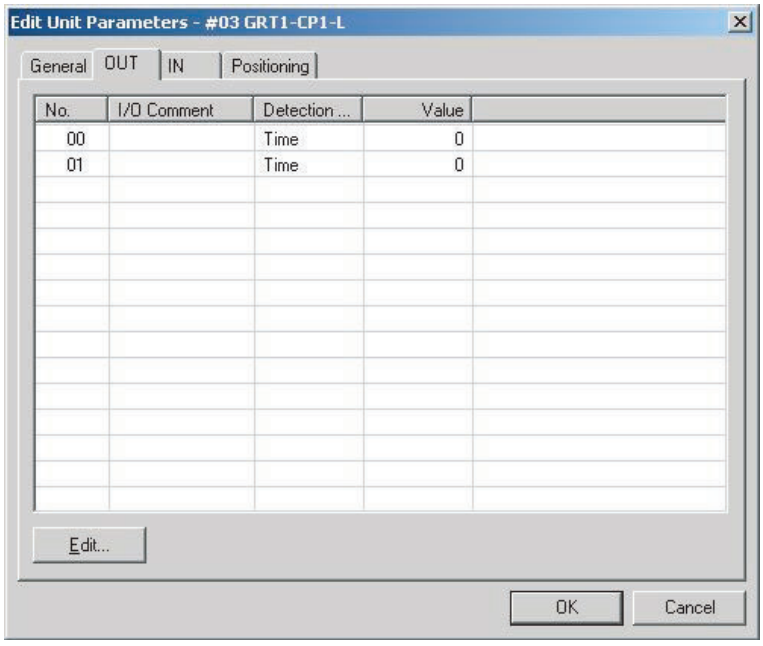

2. Select the digital output (No. 00 or 01) and click the **Edit** Button. The Edit Terminal Dialog Box will be displayed.

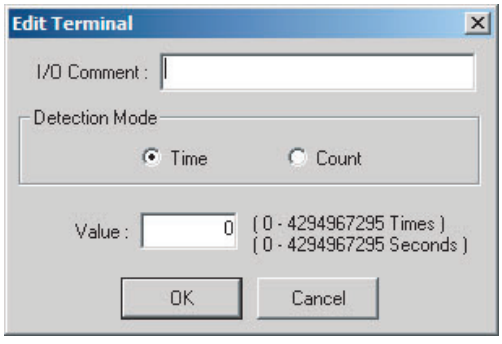

3. Set the items in the dialog box as shown in the following table.

Item	Description
I/O Comment	Enter a comment for the digital output.
Detection Mode	Specify whether to keep track of the total ON time (unit: s) or number of contact operations (unit: operations) for the maintenance counter of the digital output.
Value	Enter the set value for the detection mode. The value can be set to between 0 and 4,294,967,295 operations for the number of contact operations and to between 0 and 4,294,967,295 seconds for the total ON time.

The above settings are stored in non-volatile memory. If a setting is changed, the Positioning Unit must be reset before the new setting will be valid.

Setting Digital Input Functions

A Positioning Unit supports one digital input. Use the following procedure to set functionality. To set the functionality of the digital input rising and falling edges, refer to the *General Tab Page* on page 265.

1,2,3...

1. Click the **IN** Tab in the Edit Unit Parameters Window to display the *IN* Tab Page shown below.

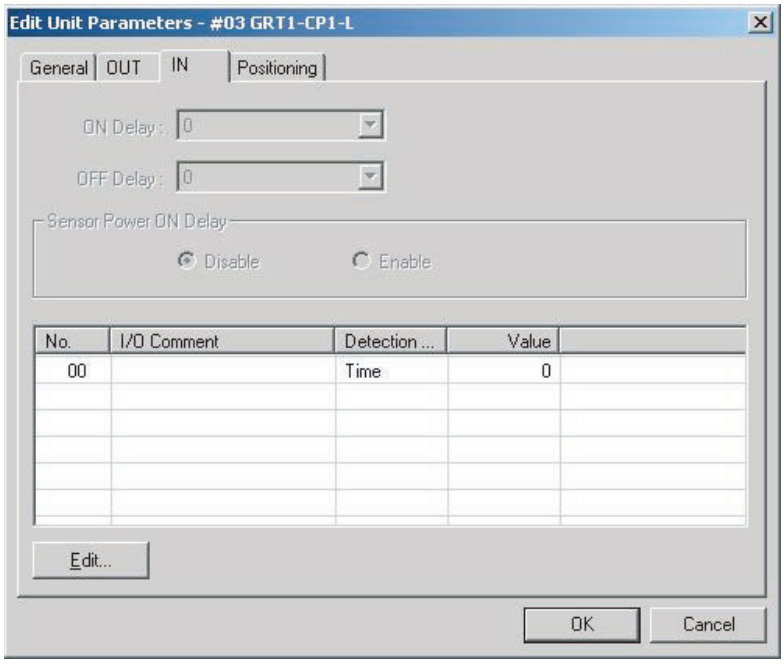

2. Select the digital input (No. 00) and click the **Edit** Button. The Edit Terminal Dialog Box will be displayed.

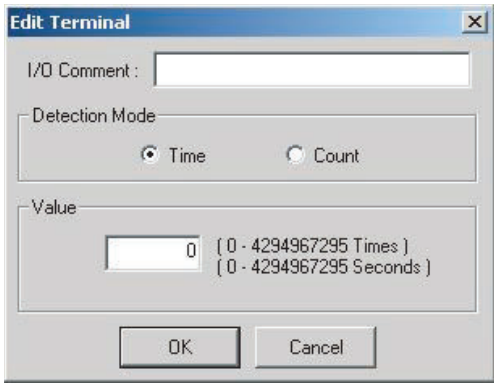

3. Set the items in the dialog box as shown in the following table.

Item	Description
I/O Comment	Enter a comment for the digital input.
Detection Mode	Specify whether to keep track of the total ON time (unit: s) or number of contact operations (unit: operations) for the maintenance counter of the digital input.
Value	Enter the set value for the detection mode. The value can be set to between 0 and 4,294,967,295 operations for the number of contact operations and to between 0 and 4,294,967,295 seconds for the total ON time.

The above settings are stored in non-volatile memory. If the setting is changed, the Positioning Unit must be reset before the new setting will be valid.

Setting Positioning Functions

A Positioning Unit supports one counter input.

Click the **Positioning** Tab in the Edit Unit Parameters Window to display the *Positioning* Tab Page shown below.

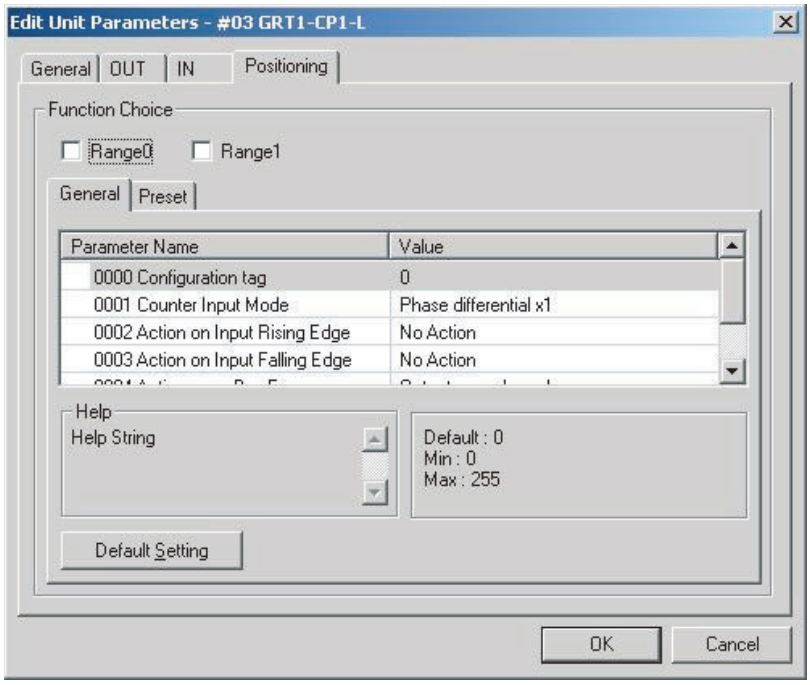

The Positioning Tab Page contains up to four tab pages used to set various counter functionality. The Range 0 and Range 1 Tab Pages appear only when the *Range 0* and *Range 1* Check Boxes are selected.

Help

Help is provided at the bottom of each tab page inside the Positioning Tab Page, along with the default setting and setting limits.

General Tab Page

The General Tab Page is used to set operating parameters, as described below.

These settings are stored in non-volatile memory. If a setting is changed, the Positioning Unit must be reset before the new setting will be valid.

■ Configuration Tag

The configuration tag indicates the version of all the present counter parameter settings. The configuration tag can be used to manage the parameter settings as a group.

The user can set the configuration tag to any value between 0 and 255. The configuration tag is downloaded with the rest of the parameter settings to the Counter Unit and uploaded with the rest of the parameter settings from the Counter Unit.

■ Counter Input Mode

Select one of the following counter input modes.

Counter input mode	Description
Phase differential ×1	Phase-shifted pulses are received on inputs A and B. • When the pulses on input A lead the pulses on input B, the counter value is incremented on the rising edge of input A. • When the pulses on input B lead the pulses on input A, the counter value is decremented on the falling edge of input A.
Phase differential ×2	Phase-shifted pulses are received on inputs A and B. • When the pulses on input A lead the pulses on input B, the counter value is incremented on the rising and falling edges of input A. • When the pulses on input B lead the pulses on input A, the counter value is decremented on the rising and falling edges of input A.
Phase differential ×4	Phase-shifted pulses are received on inputs A and B. • When the pulses on input A lead the pulses on input B, the counter value is incremented on the rising and falling edge of both input A and input B. • When the pulses on input B lead the pulses on input A, the counter value is decremented on the rising and falling edge of both input A and input B.
Pulse and direction	Input A pulses are counted and input B determines the direction of counting. • While input B is ON, the counter value is incremented. • While input B is OFF, the counter value is decremented. • The counter value is changed on the rising edge of input A.
Up/down Counter	• The counter value is incremented when pulses are received on input A. • The counter value is decremented when pulses are received on input B. • The counter value is changed on the rising edge of input A or B.

Phase Differential Counting

The following figure illustrates the operation of phase differential counting.

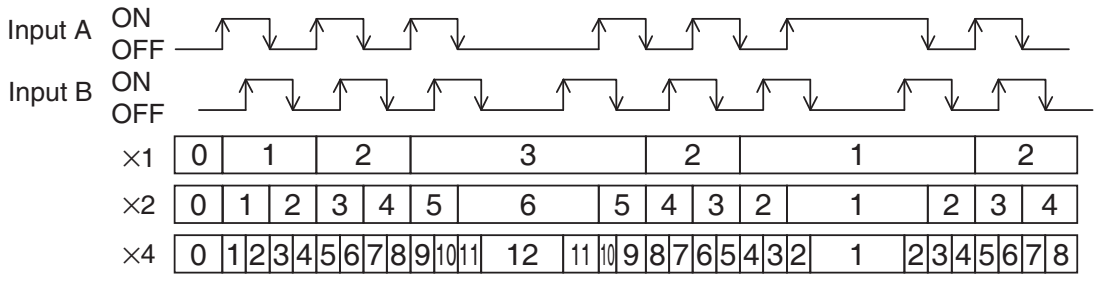

Pulse/Direction Counting

The following figure illustrates the operation of pulse/direction counting.

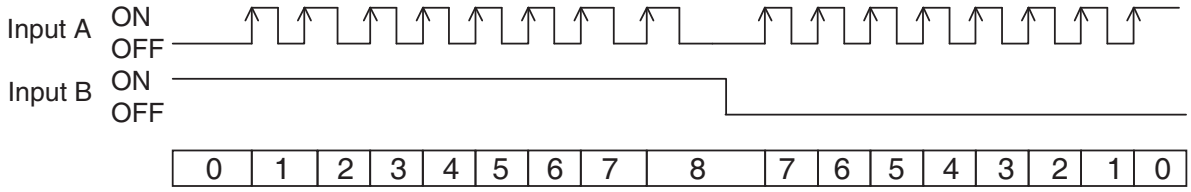

Up/Down Counting

The following figure illustrates the operation of up/down counting.

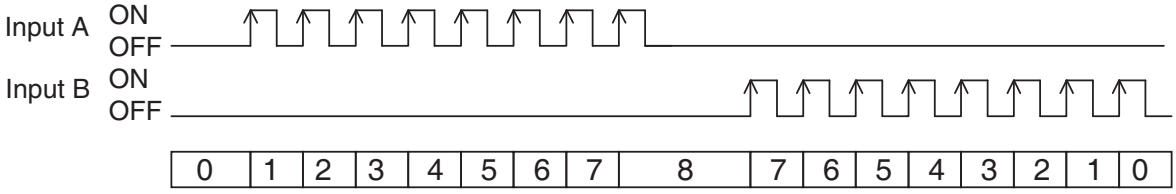

■ Action on Input Rising Edge and Action on Input Falling Edge

Select the action to be executed on the rising or falling edge of the digital input (IN).

Action	Description
No Action	No action is executed.
Capture	The Present Counter Value is stored in the Capture Value Register. The captured value can be retrieved at any time using the Counter Data Display Command Bit (bit 04 of word n+2).
Reset	The counter value is reset to 0.
Preset	The counter value is set to the preset value in the Preset Value Register.

■ Action upon Bus Error

Select the action to be executed when a bus error occurs.

Action	Description
Outputs are Cleared	The output status will be cleared until the bus error is removed, but the counter value will still be updated according to the encoder inputs.
Outputs keep functionality	The output status will continue to be updated and the counter value will still be updated according to the encoder inputs.

■ Action upon Bus Idle

Select the action to be executed when the bus goes idle (i.e., when an error occurs in host communications, such as a DeviceNet or PROFIBUS error).

Action	Description
Outputs are Cleared	The output status will be cleared until the bus idle is removed, but the counter value will still be updated according to the encoder inputs.
Outputs keep functionality	The output status will continue to be updated and the counter value will still be updated according to the encoder inputs.

■ **Default Settings**

Press the **Default Setting** Button on the *General* Tab Page to set the following default values.

Setting	Default value
Counter Input Mode	Phase differential ×1
Action on Input Rising Edge	No Action
Action on Input Falling Edge	No Action
Action upon Bus Error	Outputs are cleared.
Action upon Bus Idle	Outputs are cleared.
Configuration tag	(Not affected.)

Preset Tab Page

The Preset Tab Page is used to set the counter to a preset value. The counter can be set to the preset value using the *Action on Input Rising Edge* or *Action on Input Falling Edge* setting for the digital input or using the Preset Command Bit (bit 10 of word n+2).

Click the **Preset** Tab in the Edit Unit Parameters Window. The *Preset* Tab Page will be displayed.

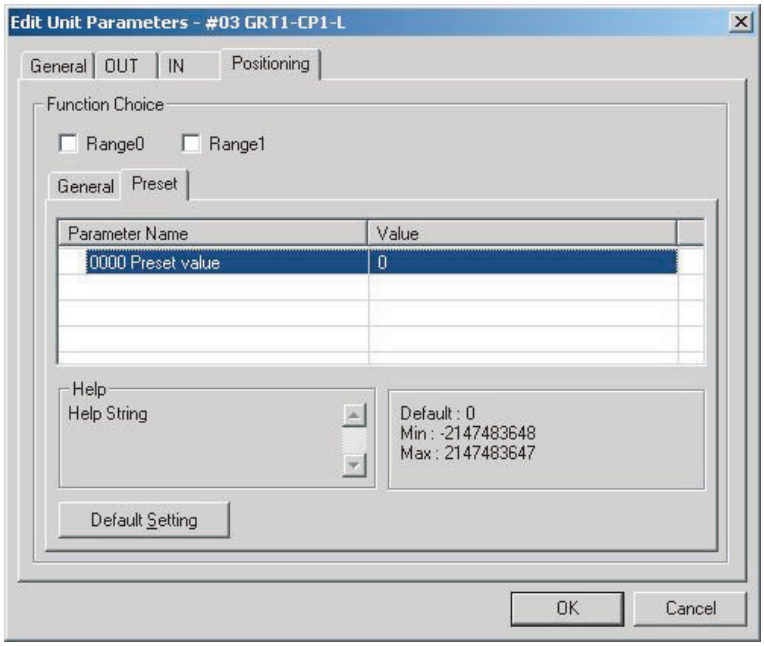

■ **Preset Value**

Set the *Preset value* Field to the desired preset value. The set value will be stored in the Preset Value Register.

The following figure shows how the preset value works. In this example, a fixed frequency is input from the encoder to the counter and the preset value is set to 1000.

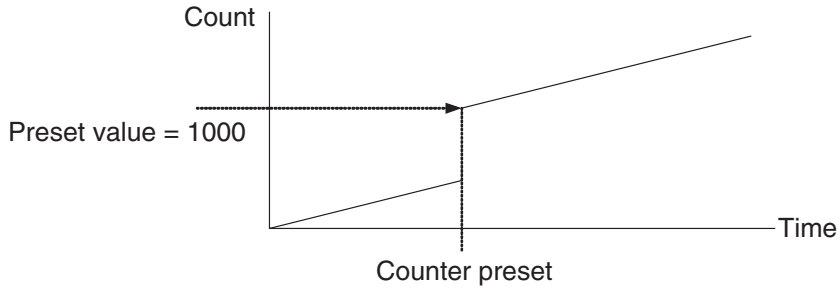

The preset value can be set to between –2,147,483,648 (8000 0000 hex) and 2,147,483,647 (7FFF FFFF hex).

This setting is stored in non-volatile memory. If the setting is changed, the new value is effective immediately.

■ **Default Settings**

Press the **Default Setting** Button on the *Preset* Tab Page to set the following default value.

Setting	Default value
Preset value	0

Range 0 and Range 1 Tab Pages

A Positioning Unit supports two comparison ranges, one for each digital output. The tab page to set a comparison range is displayed only when the range is enabled. Click the **Range 0** or **Range 1** Button on the *Positioning* Tab Page to enable using the range and display the *Range 0* or *Range 1* Tab Page. The digital output will not be controlled by the comparison function unless the corresponding range is set.

The Range 0 Tab Page is used to describe the functionality in this manual, but the functionality is the same for range 1.

Note The digital output will be controlled by the corresponding range only when the Output 0 Control Bits (bits 12 and 13 of word n+2) or Output 1 Control Bits (bits 14 and 15 of word n+2) are OFF.

The Range 0 Tab Page is used to set a comparison range for the counter value. The range has a lower limit (LL0) and an upper limit (UL0). The digital output can be controlled according to the counter value in respect to this range. Range 0 controls the digital output 0 (OUT0).

Click the **Range 0** Tab in the Edit Unit Parameters Window. The *Range 0* Tab Page will be displayed.

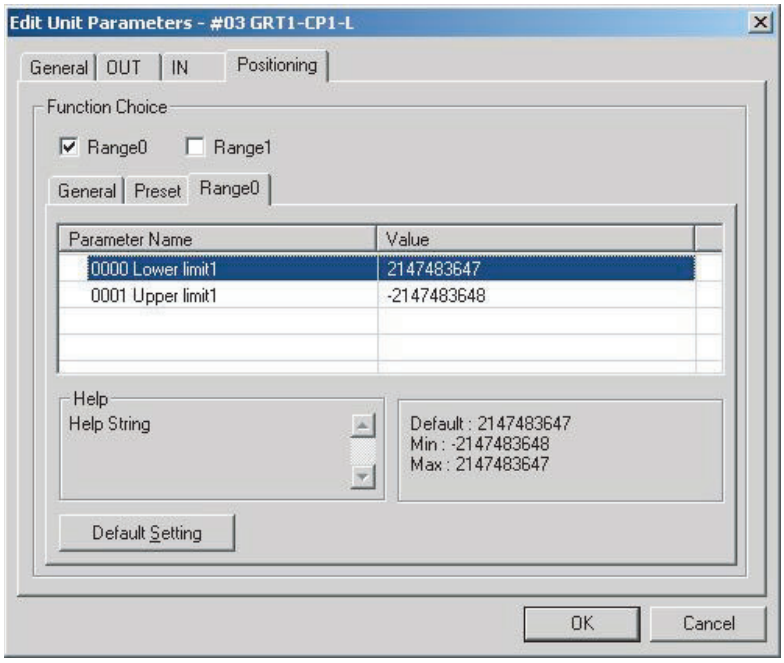

■ Operation

The output will be controlled according to the relationship between the counter value and the range settings as follows:

- If UL0 > LL0, digital output 0 will be ON when LL0 ≤ Counter value ≤ UL0, and will be OFF otherwise.
- If UL0 < LL0, digital output 0 will be OFF when UL0 ≤ Counter value ≤ LL0, and will be ON otherwise.
- If UL0 = LL0, digital output 0 will be ON when LL0 = Counter value = UL0, and will be OFF otherwise.

The following figures illustrate the first two cases.

Case 1: UL0 > LL0

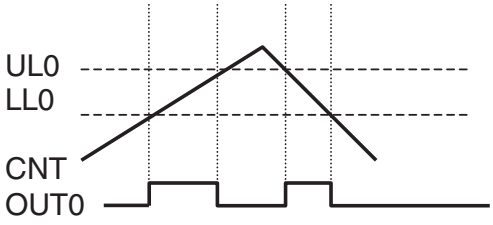

Case 2: UL0 < LL0

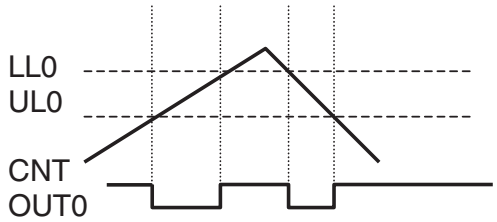

■ **Setting a Comparison Range**

Enter the desired values in the *Lower limit* and *Upper limit* Fields. The values can be between –2,147,483,648 (8000 0000 hex) and 2,147,483,647 (7FFF FFFF hex).

These settings are stored in non-volatile memory. If a setting is changed, the new value is effective immediately.

The range will be disabled if the range values are set to the minimum and maximum values.

■ **Default Settings**

Press the **Default Setting** Button on the *Range 0* or *Range 1* Tab Page to set the following default values.

Setting	Default value
Range 0	Disabled. (Option not selected.)
Range 1	Disabled. (Option not selected.)

SECTION 8
Other Units

This section provides the basic specifications and shows the components, wiring diagrams, and dimensions for the other Units used in Slice I/O Terminals.

8-1 GRT1-TBR Right Turnback Unit 274
8-2 GRT1-TBL Left Turnback Unit 274
8-3 GRT1-PD2 and GRT1-PD2G I/O Power Feed Units 275
8-4 GRT1-PD8(-1) I/O Power Feed Units and GRT1-PC8(-1) I/O Power Connection Units 277
8-5 GRT1-END End Unit 279

8-1 GRT1-TBR Right Turnback Unit

When a Slice I/O Terminal is divided into blocks to expand the system, mount a GRT1-TBR Right Turnback Unit to the right side of the first block, start a new block with a GRT1-TBL Left Turnback Unit, and connect the two Turnback Units with a GCN2-100 Turnback Cable.

Component Names and Functions

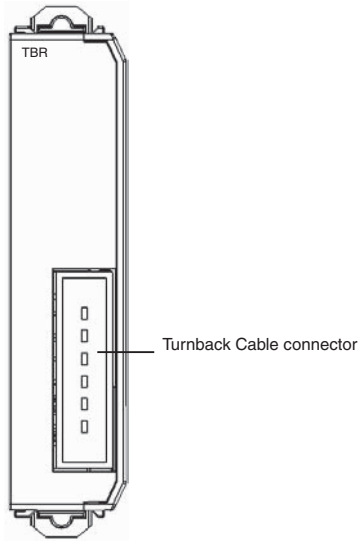

Dimensions

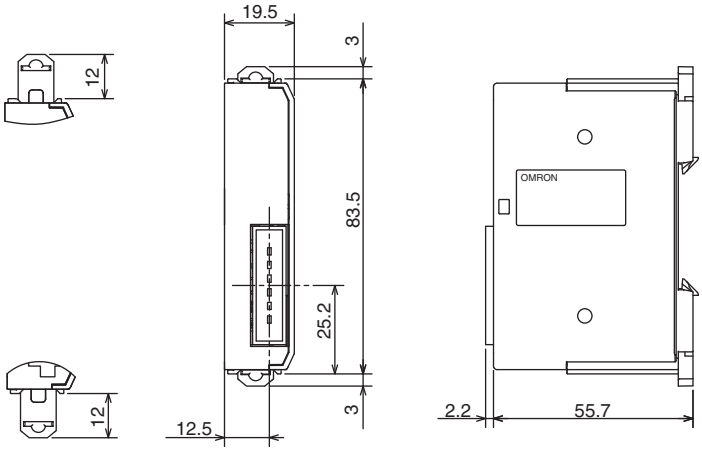

8-2 GRT1-TBL Left Turnback Unit

When a Slice I/O Terminal is divided into blocks to expand the system, mount a GRT1-TBR Right Turnback Unit to the right side of the first block, start a new block with a GRT1-TBL Left Turnback Unit, and connect the two Turnback Units with a GCN2-100 Turnback Cable.

Note When dividing the power supply, always wire the power from the same power supply that supplies the Communications Unit.

Component Names and Functions

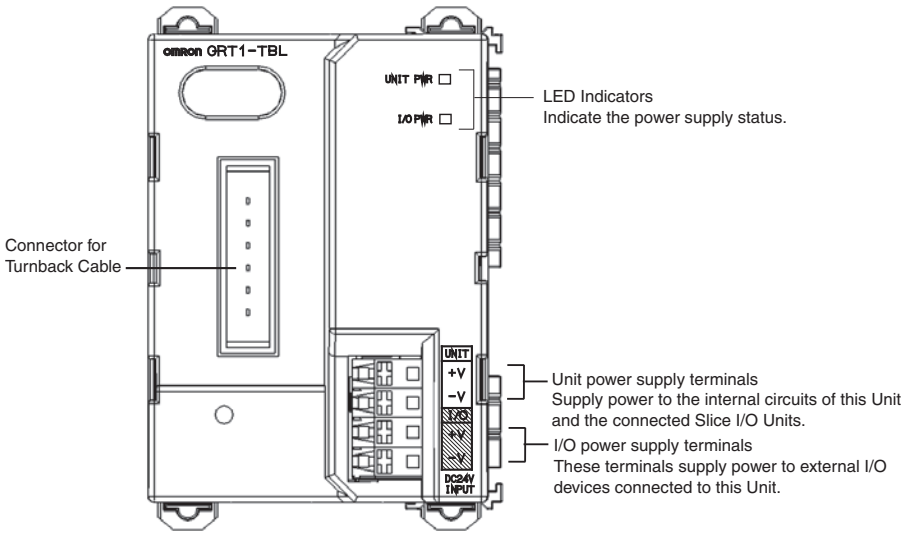

Dimensions

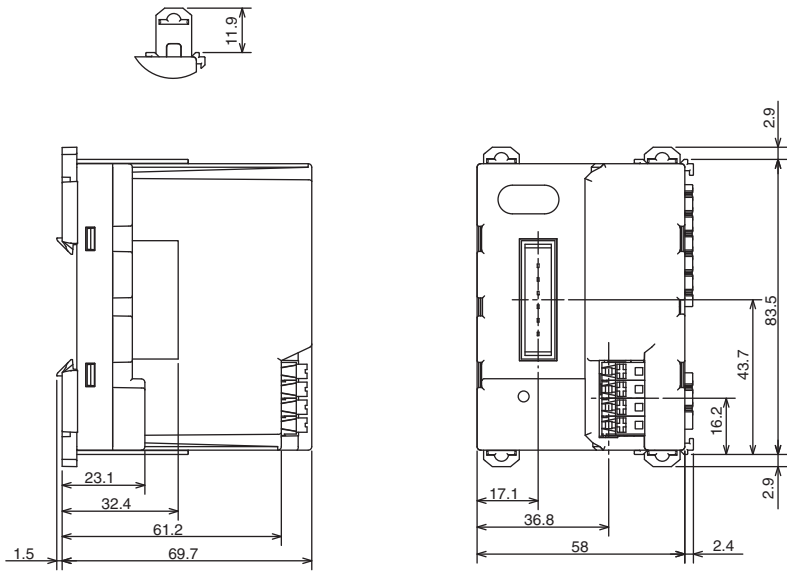

8-3 GRT1-PD2 and GRT1-PD2G I/O Power Feed Units

These Units are used to feed additional I/O power within the Slice I/O Terminal.

Item	Specification	
Model	GRT1-PD2	GRT1-PD2G
Power supply voltage	20.4 to 26.4 VDC (24 VDC, −15 to +10%)	
Current capacity	4 A	
Overcurrent protection	---	Yes
Reverse-current protection	---	Yes
V terminals	2	2
G terminals	2	2

Item	Specification	
Reset terminals	---	1
Reset V (R) terminals	---	1

There are three methods that can be used to reset the overcurrent status of GRT1-PD2G.

- Short the RESET terminal to the V (R) terminal. The overcurrent protection function will be automatically reset.
- Connect the RESET terminal to an output terminal of a Transistor Output Unit (e.g., the GRT1-OD4-1 (PNP)) and turn ON the output signal for at least 100 ms. If the Output Unit and I/O Power Feed Unit are connected to different I/O power sources, ground them to the same point.
- Turn the power supply OFF and ON. The overcurrent protection function will be automatically reset.

Component Names and Functions

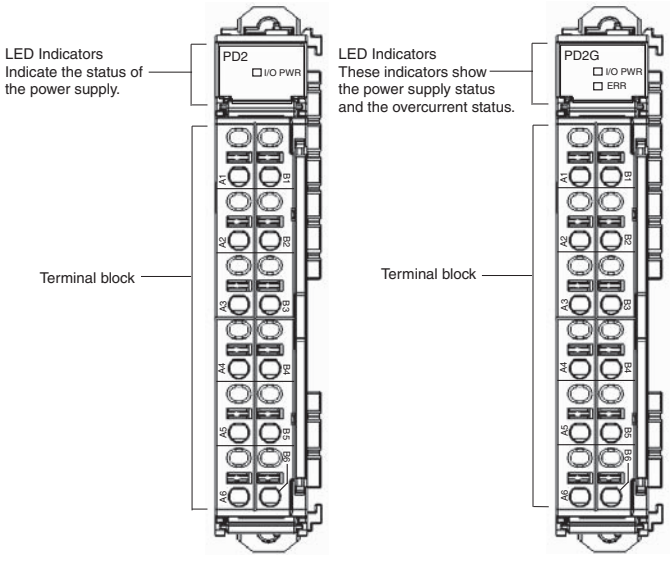

GRT1-PD2 GRT1-PD2G

LED Indicators

I/O PWR Indicator

The I/O PWR indicator shows the status of the I/O power supply.

ERR Indicator

The ERR indicator shows the status of the overcurrent protection function.

Name	Color	Status	Meaning	
I/O PWR	Green	Lit	Normal status	I/O power is being supplied normally.
	---	Not lit	Error status or no power	I/O power is not being supplied or an overcurrent occurred.
ERR	Red	Lit	Error status	An overcurrent occurred.
	---	Not lit	Normal status or no power	I/O power is being supplied normally or I/O power is not being supplied.

Wiring

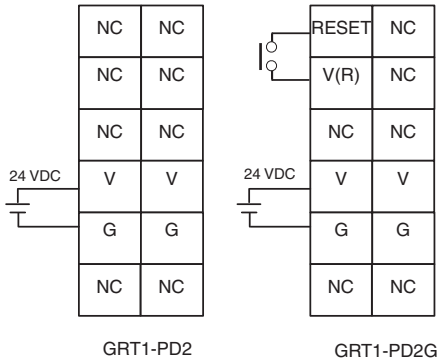

Note The RESET and V(R) terminals may be permanently bridged to achieve an automatic reset of the overcurrent protection.

Dimensions

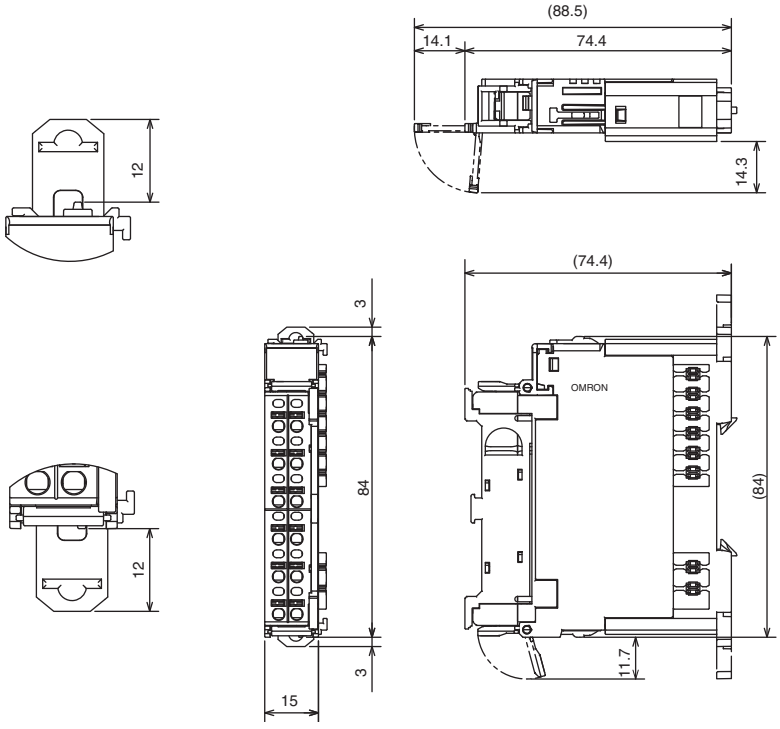

8-4 GRT1-PD8(-1) I/O Power Feed Units and GRT1-PC8(-1) I/O Power Connection Units

The GRT1-PD8 and GRT1-PD8-1 are used to provide additional I/O power within the Slice I/O Terminal. The GRT1-PD8, GRT1-PD8-1, GRT1-PC8 and GRT1-PC8-1 are used to provide extra voltage and ground terminals, i.e., for 8-point Input Units and 8-point Output Units.

Item	Specification	
Model	GRT1-PC8 and GRT1-PC8-1	GRT1-PD8 and GRT1-PD8-1
I/O power feed voltage (from terminal connector)	---	20.4 to 26.4 VDC (24 VDC –15% to +10%)
I/O power feed current (from terminal connector)	---	4 A max.

Item	Specification	
Number of voltage terminals	GRT1-PC8: Eight GRT1-PC8-1: Four	GRT1-PD8: Eight GRT1-PD8-1: Four
Number of ground terminals	GRT1-PC8: Four GRT1-PC8-1: Eight	GRT1-PD8: Four GRT1-PD8-1: Eight
I/O power voltage (to voltage terminal)	20.4 to 26.4 VDC (24 VDC –15% to +10%)	
I/O power current (to voltage terminal)	0.75 A max. per terminal 4 A max. per Unit	
Isolation between Unit power and I/O power	20 MΩ min. at 250 VDC	

Component Names and Functions (Same for GRT1-PD8, GRT1-PD8-1, GRT1-PC8 and GRT1-PC8-1)

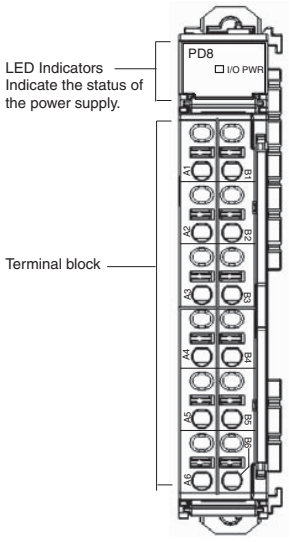

Wiring

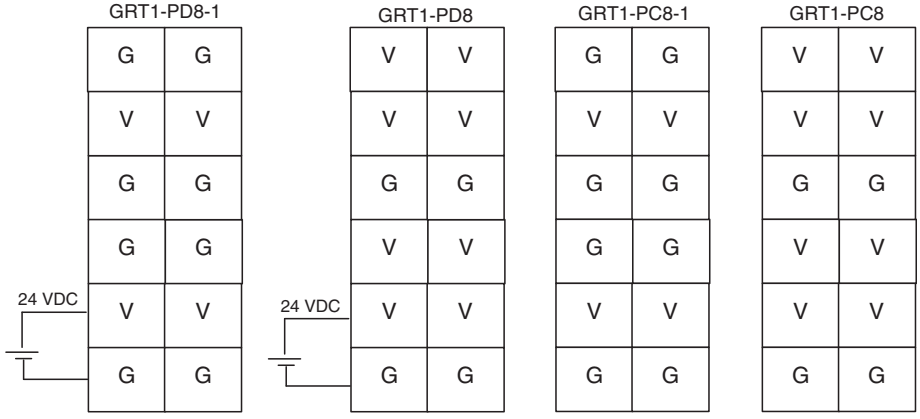

For examples of wiring in combination with the GRT1-ID8 or GRT1-ID8-1, refer to *4-6-3 Eight-point DC Input Units: GRT1-ID8 (NPN) and GRT1-ID8-1 (PNP)*. For examples of wiring in combination with the GRT1-OD8, GRT1-OD8-1, or GRT1-OD8G-1 refer to *4-6-4 Eight-point Transistor Output Units: GRT1-OD8 (NPN), GRT1-OD8-1 (PNP), and GRT1-OD8G-1 (PNP)*.

Dimensions (Same for GRT1-PD8, GRT1-PD8-1, GRT1-PC8 and GRT1-PC8-1)

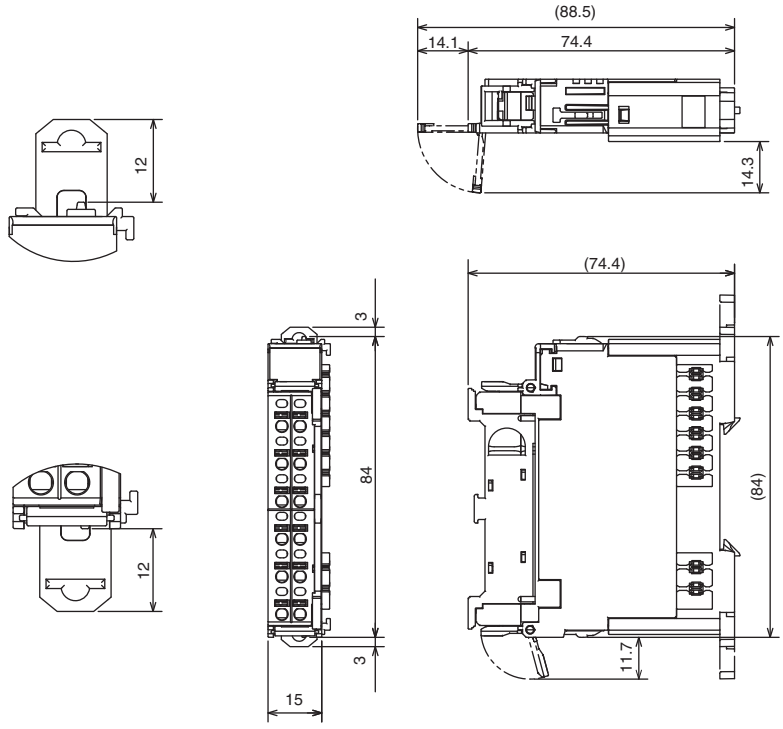

8-5 GRT1-END End Unit

An End Unit must be mounted at the very end of the Slice I/O Terminal.

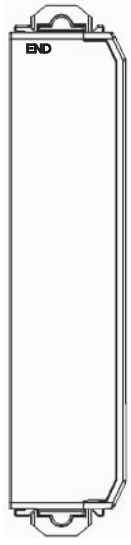

Dimensions

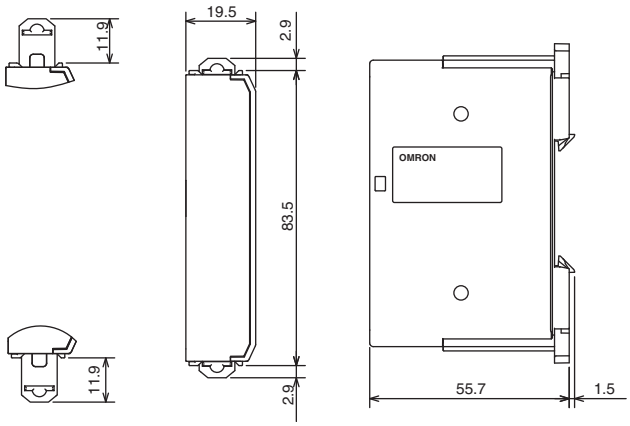

SECTION 9
Troubleshooting

This section describes error processing and troubleshooting procedures needed to keep the Slice I/O Units operating properly.

9-1 Troubleshooting Overview 282
9-1-1 Checking the Slice I/O Terminal's Status 282
9-1-2 LED Indicators 282
9-2 LED Indicators and Error Processing 283
9-3 Reading the Error History with a Programming Device 287
9-3-1 Checking Maintenance Information 287
9-3-2 Error History 290
9-4 Other Errors 291
9-5 Troubleshooting by Unit 293

9-1 Troubleshooting Overview

9-1-1 Checking the Slice I/O Terminal's Status

The following two methods can be used to check for Slice I/O Terminal errors. Use the appropriate method for the conditions.

Method	Programming Device	Features
Using LED indicators	Not required.	The general error status can be determined without using the Programming Device.
Using Programming Device	Required.	The Programming Device can be used to find detailed information about the error from the error contents.

9-1-2 LED Indicators

The following LED indicators in the Slice I/O Terminal show the system status. The Slice I/O Terminal is operating normally when all of the LED indicators are lit green (including indicators on the Communications Unit, Slice I/O Units, Turnback Units, etc.).

Example: Slice I/O Terminal with a DeviceNet Communications Unit

MS LED: Indicates the status of the DeviceNet Communications Unit.
NS LED: Indicates the status of DeviceNet communications.
TS LED: Indicates the status of the entire Slice I/O Terminal.
UNIT PWR: Indicates the status of the Unit power supply.
I/O PWR: Indicates the status of the I/O power supply.

TS LEDs: Indicate the status of each Slice I/O Unit.

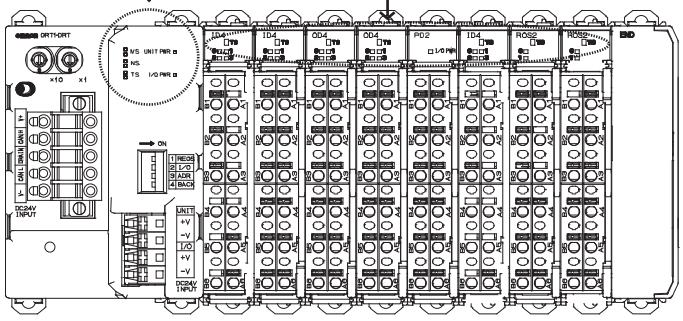

9-2 LED Indicators and Error Processing

The following table shows the meaning of the LED indicators on each Unit used in a Slice I/O Terminal, as well as error processing required when an error is indicated.

Unit	LED name	Color	Status	Meaning	Likely cause of error
Communications Unit (DeviceNet Communications Unit indicators shown)	MS	Green	MS	Unit operating normally.	---
		---	MS	Power is not being supplied to the Unit.	Check whether power is being supplied by the Unit power supply.
		Red	MS	Unit hardware failure	Turn the power OFF and then ON again. Replace the Unit if the error recurs.
		Red	MS	Parameter data is invalid.	Use a Programming Device to write the correct data again.
				Backup data is invalid.	Backup the data again.
				Registration table data is invalid.	Register the I/O configuration table again.
	NS	Green	NS	DeviceNet communications are normal.	---
		---	NS	Waiting for completion of node address duplication check.	If the problem occurs only in a particular Unit, check the baud rate and restart the Unit.
		Red	NS	There is a node address duplication error at another Unit in the DeviceNet network.	Set the node addresses again to eliminate the duplication, and restart the Slice I/O Terminal.
				DeviceNet communications stopped because of too many data errors.	Check the following items and restart the Slice I/O Terminal. • Is the baud rate the same as the Master's? • Are lengths of cables (trunk and branch lines) correct? • Are cables short-circuited, broken, or loose? • Is terminating resistance connected to both ends of the trunk line only? • Is noise interference excessive?
		Red	NS	DeviceNet communications timeout occurred.	Check the following items. • Is the baud rate the same as the Master's? • Are lengths of cables (trunk and branch lines) correct? • Are cables short-circuited, broken, or loose? • Is terminating resistance connected to both ends of the trunk line only? • Is noise interference excessive?
		Green	NS	Online with DeviceNet, but waiting for a connection with the Master.	Check whether the Master has started properly. Check whether the Slice I/O Terminal is registered in the Master's scan list.

Unit	LED name	Color	Status	Meaning	Likely cause of error
Communications Unit, continued (DeviceNet Communications Unit indicators shown)	TS	Green	TS	The Slice bus is operating normally.	---
		---	TS	Power is not being supplied to the Unit.	Check whether power is being supplied by the Unit power supply.
		Red	TS	Slice I/O Unit configuration error occurred.	Check the following items. • Are more than 64 I/O Units connected? • Are more than 128 bytes of I/O data being used? • Has the I/O configuration changed since the I/O configuration table was registered?
		Red	TS (for 2 s)	Backup operation failed.	Backup the data again.
				Restore operation failed.	Reinstall the Unit in which the data was being restored and turn the power ON again.
		Red	NS	Slice bus communications error occurred.	Check whether the Slice I/O Terminal's base block is connected properly.
				When the registration table function is enabled, the actual configuration does not match the registered configuration.	Correct the configuration and turn the power ON again.
		Green	NS	The total number of I/O points in the Slice I/O Terminals exceeds the maximum.	Correct the Unit configuration and number of I/O points and turn the power ON again.
				Restore operation in progress	Wait until the restore operation is completed.
				Backup operation in progress	Wait until the backup operation is completed.
				Joining nodes to network	Wait until the nodes have been added to the network.
	UNIT PWR	Green		Unit power supply is providing power normally.	---
		---		Unit power supply is not being supplied to the Unit.	Check whether power is being supplied by the Unit power supply.
	IO PWR	Green		I/O power supply is providing power normally.	---
		---		I/O power supply is not being supplied to the Unit.	Check whether power is being supplied by the I/O power supply.

Unit	LED name	Color	Status	Meaning	Likely cause of error
Slice I/O Units	TS	Green	TS	Slice I/O Unit operating normally.	---
		---	TS	Unit power supply is not being supplied to the Unit.	Check whether power is being supplied by the Unit power supply.
		Red	TS	Unit hardware failure	Turn the power OFF and then ON again. Replace the Unit if the error recurs.
			TS	Communications error occurred.	• Check whether the connector on the Turnback Cable is inserted properly. • Check the location of the Cable to see if the Turnback Cables and I/O lines are not wired too near the power lines.
				Error in switch settings.	Check to be sure that the switch settings are not set to an invalid setting (GRT1-AD2, GRT1-DA2□, GRT1-TS2P, GRT1-TS2PK).
				Cold junction compensator error occurred.	Check the cold junction compensation (on the GRT1-TS2T only).
		Green	TS	Restore operation in progress	Wait until the restore operation is completed.
				Backup operation in progress	Wait until the backup operation is completed.
Slice I/O Unit (GRT1-TS2□)	ERR0	Red		Input error occurred in input 0.	Check the following items. • Check if the sensor is disconnected, never was connected, short-circuited, or wired incorrectly. • Check the terminal block to see if it is disconnected. • If using a 2-wire connection, check to be sure the SHT terminals are shorted. • Check the sensor to see if it is of the correct input type. • Check to see if the temperature is outside the convertible temperature range.
				Cold junction compensator error occurred.	Check the cold junction compensation (GRT1-TS2T only.)
		---		There is no input error for input 0. (Not lit when input error detection is disabled using the input error detection disable setting.)	

Unit	LED name	Color	Status	Meaning	Likely cause of error
Slice I/O Unit (GRT1-TS2□)	ERR1	Red	Lit	Input error occurred in input 1.	Check the following items. • Check if the sensor is disconnected, never was connected, short-circuited, or wired incorrectly. • Check the terminal block to see if it is disconnected. • If using a 2-wire connection, check to be sure the SHT terminals are shorted. • Check the sensor to see if it is of the correct input type. • Check to see if the temperature is outside the convertible temperature range.
				Cold junction compensator error occurred.	Check the cold junction compensation (GRT1-TS2T only.)
		---	Not lit	There is no input error for input 1. (Not lit when input error detection is disabled using the input error detection disable setting.)	
GRT1-OD4G-3	PWR	Green	Lit	I/O power and Unit power are being supplied.	---
		---	Not lit	I/O power or Unit power is not being supplied.	Check whether power is being supplied by the I/O power supply and Unit Power Supply.
GRT1-PD2, GRT1-PD8, and GRT1-PD8-1 I/O Power Feed Units or GRT1-PC8, and GRT1-PC8-1 I/O Power Connection Units	IO PWR	Green	Lit	I/O power is being supplied normally.	---
		---	Not lit	I/O power is not being supplied to the Unit.	Check whether power is being supplied from the I/O power supply.
				An overcurrent has occurred.	Check the ERR indicator on the GRT1-PD2G only.
GRT1-PD2G I/O Power Feed Unit	ERR	Red	Lit	An overcurrent has occurred.	Remove the overcurrent, and then turn the power supply OFF and ON or input a reset signal.
		---	Not lit	An overcurrent has not occurred.	---
GRT1-TBL Left Turnback Unit	UNIT PWR	Green	Lit	Unit power supply is providing power normally.	---
		---	Not lit	Unit power supply is not being supplied to the Unit.	Check whether power is being supplied by the Unit power supply.
	IO PWR	Green	Lit	I/O power supply is providing power normally.	---
		---	Not lit	I/O power supply is not being supplied to the Unit.	Check whether power is being supplied by the I/O power supply.

Lit Not lit Flashing

9-3 Reading the Error History with a Programming Device

9-3-1 Checking Maintenance Information

From the Programming Device's Main Window, click the right mouse button and select ***Maintenance Information*** to display the Maintenance Information Window. (From the Maintenance Mode Window, double-click the icon of the desired Unit.)

Click the **I/O Module** Tab, select the desired Unit, and click the **View** Button to display the Unit's Maintenance Information Window.

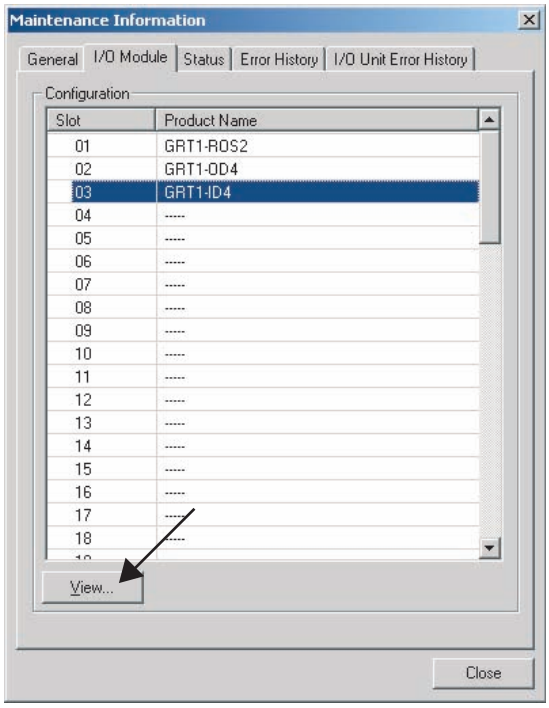

General Tab

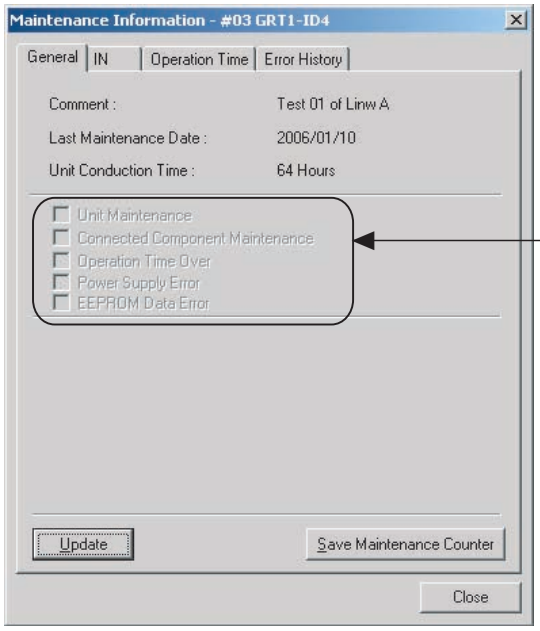

Item	Description
Comment	Displays up to 32 characters of text set as the Unit comment.
Last Maintenance Date	Displays the last maintenance date that was set.
Unit Conduction Time	Displays the total time that the Unit has been ON (cumulative power ON time).
Update Button	Click this Button to update the Maintenance information.
Save Maintenance Counter	This function saves the Maintenance counter value in the Unit. If this function is used, the previous value will be retained when the power supply is turned OFF and ON again.

Status Check Boxes

The flags (check boxes) shown in the following table will be turned ON when the corresponding error occurs.

Item	Description	Supporting models
Unit Maintenance	ON when the total Unit ON time exceeds the set value. Also turns ON when the Unit ON time exceeds 87672 hours (10 years).	All
Connected Device Maintenance	ON when any I/O point's Total ON Time Monitor or Contact Operation Counter exceeds its user-set monitor value.	GRT1-ROS2, GRT1-ID4, GRT1-ID4-1, GRT1-OD4, GRT1-OD4-1, GRT1-OD4G-1, GRT1-OD4G-3, GRT1-ID8, GRT1-ID8-1, GRT1-OD8, GRT1-OD8-1, GRT1-OD8G-1, GRT1-IA4-1, GRT1-IA4-2, GRT1-CT1, GRT1-CT1-1, and GRT1-CP1-L
Operation Time Monitor	ON when the measured operation time exceeds the user-set monitor value.	GRT1-ROS2, GRT1-ID4, GRT1-ID4-1, GRT1-OD4, GRT1-OD4-1, GRT1-OD4G-1, GRT1-OD4G-3, GRT1-ID8, GRT1-ID8-1, GRT1-OD8, GRT1-OD8-1, and GRT1-OD8G-1 GRT1-IA4-1, GRT1-IA4-2

Item	Description	Supporting models
I/O Power Supply Error	ON when the input power supply is OFF.	GRT1-ROS2, GRT1-ID4, GRT1-ID4-1, GRT1-OD4, GRT1-OD4-1, GRT1-OD4G-1, GRT1-OD4G-3, GRT1-ID8, GRT1-ID8-1, GRT1-OD8, GRT1-OD8-1, GRT1-OD8G-1, GRT1-CT1, GRT1-CT1-1, GRT1-CP1-L
EEPROM data error	ON when the data contained in EEPROM is invalid.	All

9-3-2 Error History

A Programming Device can be used to check the most recent errors detected in the Slice I/O Terminal.

The error history also shows the total time that the network power supply had been ON when the error occurred, so the time that the error occurred can be calculated.

Error History Tab (DeviceNet Configurator Example)

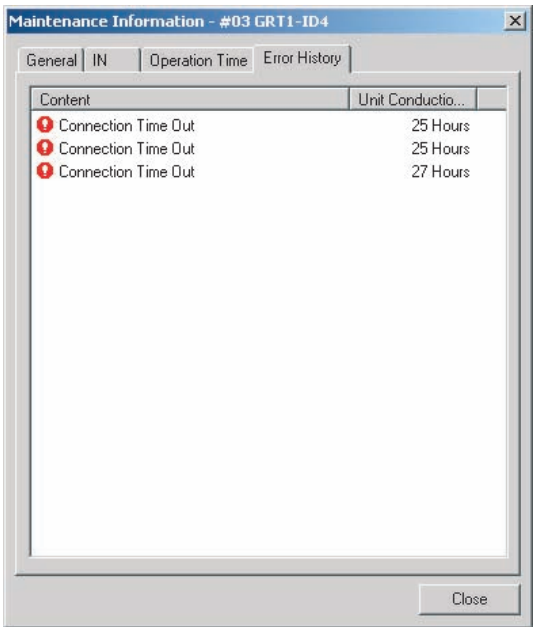

Item	Description
Content	Displays the contents of the communications errors that occurred.
Unit Conduction Time	Displays the total time that the network power supply had been ON when the error occurred.

9-4 Other Errors

Status	Likely cause and remedy
The Communications Unit's Unit Power LED is flashing.	The Unit power supply capacity is insufficient. Check the entire Slice I/O Terminal's power supply requirement and replace the power supply with one that has sufficient capacity.
The Communications Unit repeatedly checks LEDs. (A DeviceNet Communication Unit's MS/NS LED flash green and red). The I/O Unit repeatedly checks LEDs (TS LED flashing green and red).	The Unit power supply capacity is insufficient. Check the entire Slice I/O Terminal's power supply requirement and replace the power supply with one that has sufficient capacity.
The Communications Unit's TS indicator flashes green. The I/O Unit's indicator in front of the bad connection lights green and the indicator behind the bad connection goes OFF.	The slide connector on the left side of the affected Unit is not connected properly. Connect this slide connector properly and turn the power ON again. 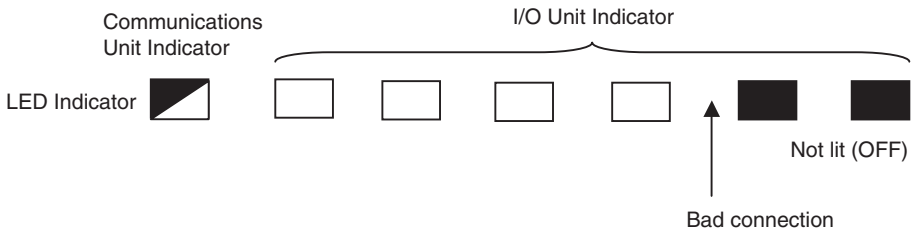
The Communications Unit's TS indicator flashes green and the I/O Unit's TS indicator lights green.	The End Unit is not connected properly. Connect the End Unit properly and turn the power ON again. 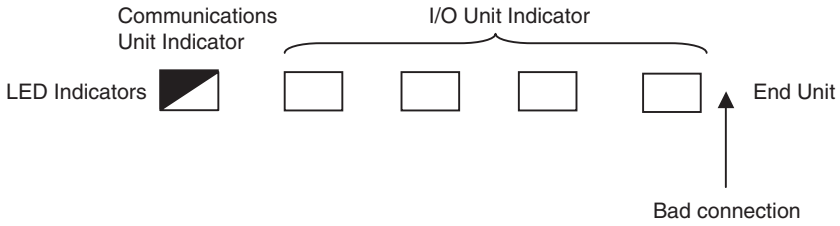
The TS indicator is light green on all of the Slice I/O Terminals and the Communications Unit indicators do not indicate an error. The output indicators on the Digital Output Units are ON while the outputs are being sent from the Master Unit, but the outputs are actually OFF.	The Slice I/O Unit is not properly connected to the base block (see below). The I/O power is cut off. Check the Slice I/O Units and make sure that each one is connected mated properly to the adjacent Units. (Refer to *3-1-2 Connecting Additional Slice I/O Units*.) 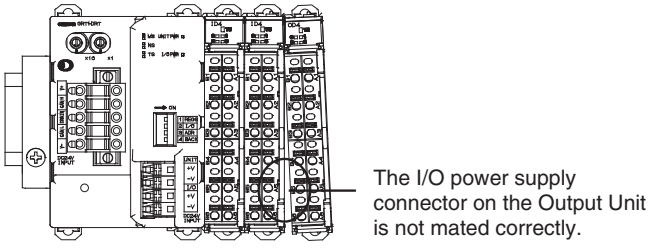

Status	Likely cause and remedy
After replacing an Analog Input Unit or Temperature Input Units, the TS indicator on the Communications Unit flashes red and the TS indicator on the replaced Unit lights red. The TS indicator on the Slice I/O Unit to the left of the replaced Unit is light green and TS indicator on the Unit on the right is not lit.	The indicator status shown below will occur when the registration table has been created or data has been backed up and then an I/O Unit other than an Analog Input Unit or Temperature Input Unit is replaced with an Analog Input Unit or Temperature Input Unit. It will also occur when an Analog Input Unit or Temperature Input Unit is replaced with a different model of Analog Input Unit or Temperature Input Unit. Check the model of the I/O Unit. When replacing a Unit, always replace it with the same model. After replacing the Unit, turn the power supply OFF and ON. 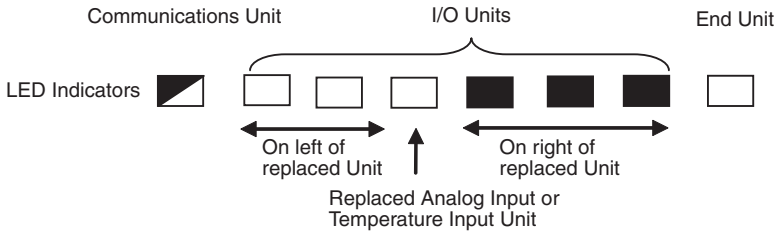
After replacing an I/O Unit, the TS indicator on the Communications Unit lights red and the TS indicator on the replaced Unit lights red. The TS indicator on other I/O Unit flash red.	The indicator status shown below will occur when the registration table has been created or data has been backed up and then an I/O Unit is replaced with a different model of I/O Unit (but not an Analog Input Unit or Temperature Input Unit). Check the model of the I/O Unit. When replacing a Unit, always replace it with the same model. After replacing the Unit, turn the power supply OFF and ON. 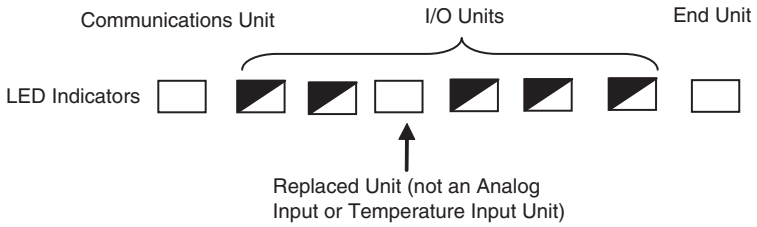

9-5 Troubleshooting by Unit

Model	Details	Probable cause	Remedy
All models except System Units	The TS indicator is not lit green.	Refer to *9-2 LED Indicators and Error Processing*.	---
	I/O comments or Unit comments cannot be set.	An attempt has been made to set comments with more than 32 characters.	Set comments with 32 characters or less.
	The Unit Maintenance Flag and Connected Device Maintenance Flag do not turn ON. **Note** The Connected Device Maintenance Flag is applicable to Units other than Analog I/O Units and Temperature Input Units.	The Status Flags will be OFF (i.e., not executed) unconditionally if the monitor value is 0.	Set the monitor value to a value other than 0.
	One of the following values was not held at its previous value when the Unit's power was turned ON gain. All models except System Units: Unit conduction time and maintenance counter Temperature Input Units: Temperature range total time, top/valley count, and cumulative counter Analog I/O Units: Cumulative counter	Data is saved in the internal nonvolatile memory once every 12 minutes when the power is ON. The data is stored when the maintenance counter is saved, but if the power supply is turned OFF without saving, the value that was saved internally the last time (maximum of 12 minutes before) will be read.	Use the Save Maintenance Counter function in the Configurator maintenance data before turning the power supply OFF.
All models except Analog I/O Units, Temperature Input Units, and System Units	The maintenance counter returned to 0.	• The maintenance counter returns to 0 when it is reset. • The maintenance counter always returns to 0 when switching is performed between the Total ON Time Monitor and Contact Operation Monitor.	---
	Parameters were edited or set, but some functions were not changed.	The changes to the settings will be enabled only when power supply is turned OFF and ON again.	Reset the Unit by turning the power supply OFF and ON, or pressing the Reset Button in the Configurator.
	The output is turned ON, but the maintenance counter does not count the outputs.	The I/O power supply is OFF.	Check whether the I/O power supply is being supplied.

Model	Details	Probable cause	Remedy
Units with Operation Time Monitor GRT1-□D4(-1) GRT1-□D8(-1) GRT1-ROS2	The value for the Operation Time Monitor is not the expected value.	• If the input filter is set, there is an ON delay or OFF delay. (Input Units only.) • The ON edge and OFF edge of the operation time can be selected. The edges may not be set in the intended way. • Operation time combinations can be selected. If the value is not the expected value, the combinations may not be set in the intended way. The accuracy is ±2 ms.	• Take the filter setting into consideration when monitoring the time or set the filter constant to 0 ms. • Check the combination settings again on Slaves for which the operation time edges can be set.
	The Operation Time Monitor Flag turns ON and OFF.	The operation time is compared to the monitor value and the Operation Time Monitor Flag is updated for each measurement. Even if this flag turns ON, it will turn OFF the next time it is updated if the operation time is below the monitor value. In addition, there is also an error log flag. If the monitor value is exceeded even once, it will be recorded in the error log.	---

Troubleshooting for Digital I/O Units

Model	Details	Probable cause	Remedy
Digital Output Units GRT1-OD□(-1) GRT1-ROS2	The output is turned ON, but no output is performed, and the I/O indicator is OFF.	A bus error or communications error occurred.	Check whether there is an error in the slice bus or host communications.
	The output is turned ON, and the I/O indicator is ON, but no output is performed.	The I/O power is not being supplied.	Check whether the I/O power is being supplied.
		Wiring with the connected device is performed incorrectly.	Check the wiring with the connected device.
		Connections between the base blocks of the Slice I/O Unit are not made properly. (Refer to the following figure.) 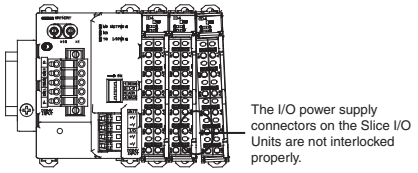 	Check whether the connections are made properly.
		The terminal block is disconnected.	Check whether the terminal block is disconnected.
	The output cannot be held when a communications error or bus error occurs.	The Unit's Output Hold/Clear setting is set to clear outputs when a communications error or bus error occurs.	Set the Unit's Output Hold/Clear setting to hold outputs when a communications error or bus error occurs.
	The output cannot be cleared when a communications error or bus error occurs.	The Unit's Output Hold/Clear setting is set to hold outputs when a communications error or bus error occurs.	Set the Unit's Output Hold/Clear setting to clear outputs when a communications error or bus error occurs.
Digital Input Units GRT1-ID□(-1)	There is a delay in the ON or OFF timing of the input value.	The input filter may be set.	Set the input filter value to 0 or set an appropriate value for the input filter.
	The connected device is ON, but it is not input and the I/O indicator is not lit.	The I/O power is not being supplied.	Check whether the I/O power is being supplied.
		Wiring with the connected device is performed incorrectly.	Check the wiring with the connected device.
		Connections between the base blocks of the Slice I/O Unit are not made properly. (Refer to the following figure.) 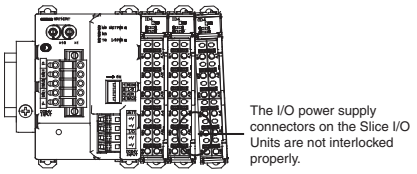 	Check whether the connections are made properly.
		The terminal block is disconnected.	Check whether the terminal block is disconnected.
	The connected device is ON, and the I/O indicator is lit, but the Unit is not input.	A bus error or communications error occurred.	Check whether there is an error in the slice bus or host communications.

Troubleshooting for Counter Units

Model	Details	Probable cause	Remedy
Counter Units GRT1-CT1(-1) GRT1-CP1-L	The count pulses cannot be detected.	Input wiring is performed incorrectly.	Check the input wiring for phases A and B.
		The I/O power is not being supplied.	Check whether the I/O power is being supplied.
		Connections between the base blocks of the Slice I/O Unit are not made properly. (Refer to the following figure.) 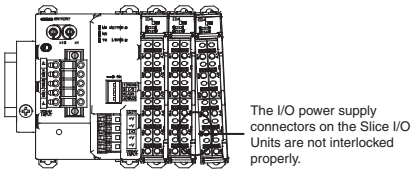 The I/O power supply connectors on the Slice I/O Units are not interlocked properly.	Check whether the connections are made properly.
		The terminal block is disconnected.	Check whether the terminal block is disconnected.
		The counter input mode setting is incorrect.	Set the count input mode correctly and restart the Unit.
		The Gate Control Bit was set to disable counting.	Turn OFF the Gate Control Bit (to enable counting).
		The counter input interface is not set correctly (CRT1-CP1-L only)	Set the counter input interface using the DIP switch on the Unit.
	The pulses are not counted properly.	The pulse frequency exceeds the maximum value for the specifications of the Unit or exceeds the maximum value for the mode that is set.	Set the pulse frequency to within the Units specifications or within the maximum value for the mode.
		The counter input mode setting is incorrect.	Set the count input mode correctly and restart the Unit.
	The count value is not reset even when the phase-Z pulse is input.	The wiring for digital input or the phase-Z input is incorrect.	Check the wiring for the digital input or the phase-Z input.
		The digital input counter reset is set incorrectly (GRT1-CT1(-1) only).	Set the Digital Input Counter Reset Mode Bit to 10.
		The phase-Z input counter reset function is not set correctly (GRT1-CP1-L only).	Set Counter Reset Mode Bits for the phase-Z input to 10.
	The output does not change even if the actual counter value exceeds the upper or lower limit.	The range setting is incorrect.	Change the upper and lower limits using the Configurator. Range 0 corresponds to output 0 and range 1 corresponds to output 1.
		The Output Control Bits are set to keep the output either ON or OFF.	Set the Output Control Bits to 00.
		The range limit settings are not correct (GRT1-CP1-L only).	Range 0 applies to output 0, and range 1 applies to output 1.
	The actual output is reversed compared with setting range.	The upper and lower limits for the range are reversed.	Exchange the upper and lower limits.
	The Unit does not respond at the rising edge and falling edge of the digital input wavelength.	The digital input is disabled.	Enable the digital input.
		The digital input setting is incorrect.	Set the digital input using the Configurator.

Model	Details	Probable cause	Remedy
Counter Units GRT1-CT1(-1) GRT1-CP1-L	The counter value is reset at unexpected times.	Resetting the counter with a digital input has been enabled (only GRT1-CT1(-1)).	Disable the digital input or set the Digital Input Counter Reset Mode Bits to 00.
		Resetting the counter with the phase-Z input has been enabled (GRT1-CP1-L only).	Set Counter Reset Mode Bits for the phase-Z input to 00.
		The counter is set to be reset at each falling edge or rising edge of the digital input.	Disable the digital input or switch the digital input to another operating mode.
		The Reset Command Bit was turned ON.	Make sure the Reset Command Bit is not turned ON.
	The counter was preset to an unexpected value.	The counter is set to be preset at each falling edge or rising edge of the digital input.	Disable the digital input or switch the digital input to another operating mode.
		The Preset Command Bit was turned ON.	Make sure the Preset Command Bit is not turned ON.
	The counter monitor values do not match the setting of the Register Selection Bits.	The Read Command Bit was not turned ON after changing the setting of the Register Selection Bits.	Turn ON the Read Command Bit.
		The monitor value has been set to automatically show the present value of the counter when the Unit is restarted or reset.	Set the Register Selection Bits and monitor value again.
	The counter present value is not stored as the monitor value.	Another value is stored as the monitor value.	Set the Register Selection Bits to 000 and turn ON the Read Command Bit again.
	ON delay time, OFF delay time, or Sensor operation delay time cannot be set.	These functions are not supported by the Counter Unit.	---
	The range cannot be set using the Configurator.	The range check box is not selected in the Configurator.	Select the range check box, and then set the upper and lower limits.
Counter Units, GRT1-CP1-L only	The status of the phase-Z input and digital input does not appear on the Z/I indicator.	An exclusive OR of the phase-Z input and digital input is shown on the Z/I indicator.	Turn OFF one of the inputs.
	The status of the phase-A input and phase-B input does not appear on the A,B indicator.	An exclusive OR of the phase-A input and phase-B input is shown on the A,B indicator.	Turn OFF one of the inputs.

Analog I/O Units and Temperature Input Units

Model	Details	Probable cause	Remedy
Analog I/O Units GRT1-AD2 GRT1-DA2V GRT1-DA2C	The status flag does not turn ON even when the monitor value is exceeded.	• The relevant Smart function is not enabled. • The Status Flags will be OFF unconditionally if the monitor value is 0.	• Enable the relevant function. • Set the monitor setting to a value other than 0.
	• The analog input value is not as expected even when the input type, display mode, or unit is changed. Alternatively, the analog output is not output as expected. • Unit does not operate as expected even if the data allocated to the I/O or the function enable bit is changed.	The new settings will not be reflected without resetting the Unit by turning the Unit's power OFF and ON or resetting the Unit from the Configurator.	Either turn the Unit's power OFF and ON or reset the Unit from the Configurator.
	• The analog data is not as expected or the error in the analog data is large. • Disconnection is detected even though there is no disconnection (GRT1-AD2 only).	The functions are not correctly allocated to the I/O data.	Check again whether the type of analog data to be set is correct and allocation to I/O data is performed.
		Scaling is performed.	• If scaling is performed, check again whether the scaled value is correct. • Turn scaling OFF if it is mistakenly turned ON.
		User adjustment error is large.	Perform user adjustment again.
		The input range setting is incorrect.	The ranges for detecting disconnection are 1 to 5 V and 4 to 20 mA. Check whether the input ranges are correct.
	The input range or output range cannot be changed with the external switch.	SW4 is turned OFF (default).	Turn SW4 ON.
	User adjustment is not accepted.	An attempt has been made to perform adjustment with input that is outside the setting range.	• Input the correct input voltage (current) and perform adjustment again. • Review the adjustment system again.
	Functions cannot be set using the Configurator.	SW4 is turned ON.	Turn SW4 OFF.

Model	Details	Probable cause	Remedy
Analog Input Unit GRT1-AD2	Disconnection is not indicated.	The input range is not set to 1 to 5 V or 4 to 20 mA. Disconnection cannot be indicated if the ranges are not 1 to 5 V or 4 to 20 mA.	Check whether the input ranges are correct.
	The Top/Valley Detection Timing Flags do not turn ON.	The hysteresis value is too large for the amount of input change.	Decrease the value by matching the absolute value of hysteresis to the amount of change in input.
		The hysteresis is 0.	Set the hysteresis to a value other than 0.
		The top/valley function is not enabled.	Enable the top/valley function. (After making the setting, reset the Unit using the Configurator or to turn the Unit's power OFF and ON.)
	The Top/Valley Detection Timing Flags turn ON frequently.	The hysteresis value is too small for the amount of input change.	Increase the value by matching the absolute value of hysteresis to the amount of change in input.
	The conversion cycle is long.	Many processing functions are being used. Processing time is increased each with each additional function.	Disable any unused functions and execute conversion.
Analog Output Units GRT1-DA2V GRT1-DA2C	The expected value is not held when a communications error or slice bus error occurs.	Output value settings at communications errors are incorrect.	Check the details of the output value settings at errors again.
Temperature Input Unit (GRT1-TS2□)	Status does not turn ON even if the monitoring set value is exceeded.	• Relevant function is not enabled. • Status turns OFF regardless of other conditions when monitoring set value is 0. • Monitoring set value was set with an incorrect number of decimal places.	• Enable the corresponding function. • Set the monitoring set value to a value other than 0. • Check the number of decimal places and reset the set value.
	• The expected temperature input value cannot be achieved even if the input type, display mode, and units are changed. • Unit does not operate as expected even if the data allocated to the I/O, or the function enable bit is changed.	• The change will not be reflected unless the Unit's power supply is turned OFF and then ON or the Configurator is reset after the change.	• Turn power supply OFF and then ON or reset the Configurator.

Model	Details	Probable cause	Remedy
Temperature Input Unit (GRT1-TS2□), continued	• Temperature input data is not as expected, or the temperature input data error is large. • An Off-wire condition was detected even though there is no Off-wire condition.	• Function allocation for the I/O data is incorrect.	• Check that the correct temperature input data has been allocated to the I/O data.
		• Scaling is being performed.	• When performing scaling, check whether or not the scaling values are correct. • If the scaling function is unintentionally turned ON, turn it OFF.
		• The sensor being connected and the Unit's input type are different.	Check the input type setting.
		• User adjustment error is large.	Check the user adjustment setting.
		• An error in the 1/100 and normal Display Modes. • An error reading the sensor's decimal point position.	• The display value 100 times the input value in 1/100 Display Mode regardless of the selected input type. Check that the correct display value is set in the Unit.
		The Slice I/O Terminal is not mounted in the standard orientation.	Check the mounting orientation.
	Cannot set the input type with the external switch.	• SW4 is turned OFF (default)	• Turn SW4 ON.
	User adjustment settings are not accepted.	• Adjustment was performed with an input that was outside of the acceptable setting range.	• Enter the correct input resistance and perform correction again (GRT1-TS2P/TS2PK). Enter the correct input voltage and perform correction again (GRT1-TS2T). • Check the adjustment system and correct if necessary.
	Off-wire display will not go out.	• The sensor is disconnected. • The temperature is far outside of the sensor's measurement temperature range. • The input type is incorrect for the temperature being measured.	• Fix the sensor disconnection. • Check the connected sensor, input type setting, and temperature range.
	• Top/valley status will not turn ON. • Top/valley occurrences are not being counted.	• The hysteresis setting is too high for the amount of temperature change.	• Decrease the hysteresis to correspond with the amount of temperature change.
		• Hysteresis is set to 0.	• Set hysteresis to a value other than 0.
		• Top/valley function is not enabled.	• Enable the top/valley function. (After enabling the function, it is necessary to reset the Configurator or turn the power supply OFF and ON.)
	• Top/valley status turns ON frequently. • Top/valley count is higher than expected.	• Hysteresis is set too low for the amount of temperature change.	• Increase the hysteresis to correspond with the amount of temperature change.

Model	Details	Probable cause	Remedy
Temperature Input Unit (GRT1-TS2□), continued	The scaling value overflows or underflows. (Temperature data at time of overflow: 7FFE hex, Temperature data at time of underflow: 8000 hex)	Offset set value is too large, so the scaled value has exceeded the display range.	Decrease the offset setting so that the scaled value does not exceed the scaling value display range.
	Monitoring set value turns ON immediately.	Monitoring set value is not set appropriately.	Check the monitoring set value.
	Temperature values are not being counted even though they meet the count conditions of the zone counter.	Comparator function is not enabled.	• Enable the comparator. (After enabling, it is necessary to reset the Configurator or turn the power supply OFF and ON.)
	Unit does not operate as expected even after the comparator function and hysteresis have been set.	• The temperature display unit setting is not correct (°C or °F). • The decimal point position was read incorrectly.	Check the decimal point position and °C/ °F display for the input type and display mode. If these settings have been changed during operation, check the comparator and hysteresis settings and correct if necessary.
	The temperature difference detected by the data comparison between channels function is not operating properly.	• Data other than the temperature value is allocated as the I/O data. (The 1/100 Display Mode must be used for the data comparison between channels function.)	• Assign the temperature value to the I/O data.
	The I/O comment or Unit comment cannot be set.	A comment longer than 32 characters is being set.	Set a comment of 32 characters maximum.

Appendix A
Explicit Messages

DeviceNet explicit messages sent from the Master Unit to a GRT1-series DeviceNet Communications Unit can be used to read or write any parameter of a specified GRT1-series DeviceNet Communications Unit.

The DeviceNet Communications Units process the commands sent from the Master and then return responses.

Basic Format of Explicit Messages

The basic format of each command and response is shown below.

Command Block

Destination node address	Service code	Class ID	Instance ID	Attribute ID	Data

Destination Node Address

The node address of the Unit that is sending the explicit messages (commands) is specified as a single-byte hexadecimal.

Service Code, Class ID, Instance ID, Attribute ID

The parameters used for specifying the command, processing object, and processing content.

Note The number of bytes designated for Class ID, Instance ID, and Attribute ID depend on the Master Unit. When sent from an OMRON DeviceNet Master, the Class ID and Instance ID are 2 bytes (4 digits), and Attribute ID is 1 byte (2 digits).

Class ID

If the class ID is 0 × 80 to 0 × 90, a message is being sent to a Slice I/O Unit via the Communications Unit.

Instance ID

This parameter gives the unit number of the Slice I/O Unit (1 to 63).

Data

Data is not required when the read command is used.

Response Block

Normal Response Block

Number of bytes received	Source node address	Service code	Data

Error Response Block

Number of bytes received: 0004 hex (fixed)	Source node address	Service code	Error code

Number of Bytes Received

The number of bytes received from the source node address is returned in hexadecimal. When an error response is returned for an explicit message, the number of bytes is always 0004 hex.

Source Node Address

The node address of the node from which the command was sent is returned in hexadecimal.

Service Code

For normal completion, the value when the leftmost bit of the service code specified in the command turns ON is stored as shown in the following table.

Function	Command service code	Response service code
Write data	10 hex	90 hex
Read data	0E hex	8E hex
Reset	05 hex	85 hex
Save	16 hex	96 hex

When an error response is returned for an explicit message, the value is always 94 hex.

Data

Read data is included only when a read command is executed.

Error Codes

The explicit message error code. For details, refer to the list of error codes in the following table.

List of Error Codes

Response code	Error name	Cause
08FF	Service not supported	The Service code is incorrect.
09FF	Invalid Attribute value	The specified Attribute value is not supported. The data written was outside valid range.
16FF	Object does not exist	The specified Instance ID is not supported.
15FF	Too much data	The data is larger than the specified size.
13FF	Not enough data	The data is smaller than the specified size.
0CFF	Object state conflict	The specified command cannot be executed due to an internal error.
20FF	Invalid parameter	The specified operation command data is not supported.
0EFF	Attribute not settable	An Attribute ID supported only for reading has been executed for a write service code.
10FF	Device state conflict	The specified command cannot be executed due to an internal error.
14FF	Attribute not supported	The specified Attribute is not supported.
19FF	Store operation failure	The data cannot be stored in memory.
2AFF	Group 2 only server general failure	The specified command or Attribute is not supported or the Attribute was not set.

Explicit Messages Shared by All Slice I/O Units

Reading Status

Explicit message	Read/write	Function	Command					Response
			Service code	Class ID	Instance ID	Attribute ID	Data size	
Warning Information Read	Read	Reads the Slice I/O Unit's warning status data.	0E hex	8D hex	01 to 40 hex (See note.)	72 hex	---	2 bytes
Alarm Information Read	Read	Reads the Slice I/O Unit's alarm status data.	0E hex	8D hex	01 to 40 hex (See note.)	73 hex	---	2 bytes

Note The Instance ID specifies the Slice I/O Unit's unit number (1 to 63 decimal).

Setting and Monitoring the Unit Conduction Time

Explicit message	Read/ write	Function	Command					Response
			Service code	Class ID	Instance ID	Attribute ID	Data size	
Unit Maintenance Set Value	Read	Reads the set value for the Slice I/O Unit's Unit Conduction Time (Power ON time, unit: 0.1 hr)	0E hex	8D hex	01 to 40 hex*1	70 hex	---	4 bytes 0000 0000 to FFFF FFFF hex (0 to 4,294,967,295 decimal)
	Write	Writes the set value for the Slice I/O Unit's Unit Conduction Time (Power ON time, unit: 0.1 hr)	10 hex	8D hex	01 to 40 hex*1	70 hex	4 bytes 0000 0000 to FFFF FFFF hex (0 to 4,294,967,295 decimal)*2	---
Unit Maintenance Present Value	Read	Reads the present value for the Slice I/O Unit's Unit Conduction Time (Power ON time, unit: 0.1 hr)	0E hex	8D hex	01 to 40 hex*1	6E hex	---	4 bytes 0000 0000 to FFFF FFFF hex (0 to 4,294,967,295 decimal)
Unit Maintenance Flag	Read	Reads the monitor status of the Slice I/O Unit's Unit Conduction Time (Power ON time)	0E hex	8D hex	01 to 40 hex*1	6F hex	---	1 byte 00 hex: Within range 01 hex: Out of range (Over threshold or 87672 hours)

Note (1) The Instance ID specifies the Slice I/O Unit’s unit number (1 to 64 decimal).

(2) If a value equal to or higher than D60B0 hex (876720) is set, the Unit Maintenance Flag will turn ON when 87672 hours (10 years) is reached.

Explicit Messages for Digital I/O Units

Setting and Monitoring Input Terminals

Explicit message	Read/ write	Function	Command					Response
			Service code	Class ID	Instance ID	Attribute ID	Data size	
Terminal Maintenance Information Monitor Mode	Read	Reads the input's monitor mode for maintenance information.	0E hex	8E hex	01 to 40 hex*1	74 hex	---	4 bytes 0: Total ON time mode 1: Contact operation counter mode The mode is read for inputs 0 to 32.*10
	Write	Writes the input's monitor mode for maintenance information.	10 hex	8E hex	01 to 40 hex*1	74 hex	4 bytes 0: Total ON time mode 1: Contact operation counter mode The mode is set for inputs 0 to 32.*10	---
Set Value of Input Maintenance Counter	Read	Reads the set value for the total ON time (unit: s) or number of contact operations (unit: operations) the input (0 to 3, or 0 to 7 for an Eight-input Unit) specified by the Attribute ID.	0E hex	8E hex	01 to 40 hex*1	66 hex*2 69 hex*3 6C hex*4 6F hex*5 9C hex*6 9F hex*7 A2 hex*8 A5 hex*9	---	4 bytes 0000 0000 to FFFF FFFF hex (0 to 4,294,967,295 decimal)
	Write	Writes the set value for the total ON time (unit: s) or number of contact operations (unit: operations) for the input (0 to 3, or 0 to 7 for an Eight-input Unit) specified by the Attribute ID.	10 hex	8E hex	01 to 40 hex*1	66 hex*2 69 hex*3 6C hex*4 6F hex*5 9C hex*6 9F hex*7 A2 hex*8 A5 hex*9	4 bytes 0000 0000 to FFFF FFFF hex (0 to 4,294,967,295 decimal)	---
Read Input Maintenance Counter	Read	Reads the total ON time (unit: s) or number of contact operations (unit: operations) for the input (0 to 3, or 0 to 7 for an Eight-input Unit) specified by the Attribute ID.	0E hex	8E hex	01 to 40 hex*1	65 hex*2 68 hex*3 6B hex*4 6E hex*5 9B hex*6 9E hex*7 A1 hex*8 A4 hex*9	---	4 bytes 0000 0000 to FFFF FFFF hex (0 to 4,294,967,295 decimal)

Explicit message	Read/ write	Function	Command					Response
			Service code	Class ID	Instance ID	Attribute ID	Data size	
Reset Input Maintenance Counter	Reset	Resets the total ON time (unit: s) or number of contact operations (unit: operations) for the input (0 to 3, or 0 to 7 for an Eight-input Unit) specified by the Attribute ID.	05 hex	8E hex	01 to 40 hex[*1]	65 hex[*2] 68 hex[*3] 6B hex[*4] 6E hex[*5] 9B hex[*6] 9E hex[*7] A1 hex[*8] A4 hex[*9]	---	---
Read Monitor Status of Input Maintenance Counter	Read	Reads the monitor status for total ON time or number of contact operations for the input.	0E hex	8E hex	01 to 40 hex[*1]	75 hex	---	4 bytes 0: In range 1: Out-of-range (over the monitor value) The status is read for inputs 0 to 32.[*10]

Note (1) The Instance ID specifies the Slice I/O Unit's unit number (1 to 64 decimal).
(2) Specifies input 0.
(3) Specifies input 1.
(4) Specifies input 2.
(5) Specifies input 3.
(6) Specified input 4 (Eight-input Units only).
(7) Specified input 5 (Eight-input Units only).
(8) Specified input 6 (Eight-input Units only).
(9) Specified input 7 (Eight-input Units only).
(10) Bit numbers correspond to input numbers, e.g., bit 00 corresponds to input 0.

Setting and Monitoring Output Terminals

Explicit message	Read/ write	Function	Command					Response
			Service code	Class ID	Instance ID	Attribute ID	Data size	
Terminal Maintenance Information Monitor Mode	Read	Reads the specified output's monitor mode for maintenance information.	0E hex	8E hex	01 to 40 hex*1	85 hex	---	4 bytes 0: Total ON time mode 1: Contact operation counter mode The mode is read for outputs 0 to 32.*10
	Write	Writes the specified output's monitor mode for maintenance information.	10 hex	8E hex	01 to 40 hex*1	85 hex	4 bytes 0: Total ON time mode 1: Contact operation counter mode The mode is set for outputs 0 to 32.*10 Set all other bits to 0.	---
Set Value of Output Maintenance Counter	Read	Reads the set value for the total ON time (unit: s) or number of contact operations (unit: operations) the output (0 to 3, or 0 to 7 for an Eight-output Unit) specified by the Attribute ID.	0E hex	8E hex	01 to 40 hex*1	78 hex*2 7B hex*3 7E hex*4 81 hex*5 A8 hex*6 AB hex*7 AE hex*8 B1 hex*9	---	4 bytes 0000 0000 to FFFF FFFF hex (0 to 4294967295 decimal)
	Write	Writes the set value for the total ON time (unit: s) or number of contact operations (unit: operations) for the output (0 to 3, or 0 to 7 for an Eight-output Unit) specified by the Attribute ID.	10 hex	8E hex	01 to 40 hex*1	78 hex*2 7B hex*3 7E hex*4 81 hex*5 A8 hex*6 AB hex*7 AE hex*8 B1 hex*9	4 bytes 0000 0000 to FFFF FFFF hex (0 to 4294967295 decimal)	---
Read Output Maintenance Counter	Read	Reads the total ON time (unit: s) or number of contact operations (unit: operations) for the output (0 to 3, or 0 to 7 for an Eight-output Unit) specified by the Attribute ID.	0E hex	8E hex	01 to 40 hex*1	77 hex*2 7A hex*3 7D hex*4 80 hex*5 A7 hex*6 AA hex*7 AD hex*8 B0 hex*9	---	4 bytes 0000 0000 to FFFF FFFF hex (0 to 4294967295 decimal)

Explicit message	Read/ write	Function	Command					Response
			Service code	Class ID	Instance ID	Attribute ID	Data size	
Reset Output Maintenance Counter	Reset	Resets the total ON time (unit: s) or number of contact operations (unit: operations) for the output (0 to 3, or 0 to 7 for an Eight-output Unit) specified by the Attribute ID.	05 hex	8E hex	01 to 40 hex[*1]	77 hex[*2] 7A hex[*3] 7D hex[*4] 80 hex[*5] A7 hex[*6] AA hex[*7] AD hex[*8] B0 hex[*9]	---	---
Read Monitor Status of Output Maintenance Counter	Read	Reads the monitor status for total ON time or number of contact operations for the outputs.	0E hex	8E hex	01 to 40 hex[*1]	86 hex	---	4 bytes Read information for points 0 to 32. 0: In range 1: Out-of-range (over the monitor value) The status is read for outputs 0 to 32.[*10]

Note (1) The Instance ID specifies the Slice I/O Unit's unit number (1 to 64 decimal).
(2) Specifies output 0.
(3) Specifies output 1.
(4) Specifies output 2.
(5) Specifies output 3.
(6) Specified output 4 (Eight-output Units only).
(7) Specified output 5 (Eight-output Units only).
(8) Specified output 6 (Eight-output Units only).
(9) Specified output 7 (Eight-output Units only).
(10) Bit numbers correspond to output numbers, e.g., bit 00 corresponds to output 0.

Setting and Monitoring the Operation Time

Explicit message	Read/ write	Function	Command					Response
			Service code	Class ID	Instance ID	Attribute ID	Data size	
Set Value for Operation Time Monitor	Read	Reads the monitor set value for the operation time (unit: ms) specified by the Attribute ID.	0E hex	8E hex	01 to 40 hex*1	8B hex*2 93 hex*3 B4 hex*5 BC hex*6	---	2 bytes 0000 to FFFF hex (0 to 65,535 decimal)
	Write	Writes the monitor set value for the operation time (unit: ms) specified by the Attribute ID.	10 hex	8E hex	01 to 40 hex*1	8B hex*2 93 hex*3 B4 hex*5 BC hex*6	2 bytes 0000 to FFFF hex (0 to 65,535 decimal)	---
Present Value for Operation Time Monitor	Read	Reads the present value for the operation time (unit: ms) specified by the Attribute ID.	0E hex	8E hex	01 to 40 hex*1	8A hex*2 92 hex*3 B3 hex*5 BB hex*6	---	2 bytes 0000 to FFFF hex (0 to 65,535 decimal)
Monitor Status for Operation Time Monitor	Read	Reads the monitor status for the operation time (unit: ms) specified by the Attribute ID.	0E hex	8E hex	01 to 40 hex*1	87 hex*4	---	2 bytes 0000 to FFFF hex (0 to 65,535 decimal)
Operation Time Monitor Peak Value Read	Read	Reads the peak value for the operation time (unit: ms) specified by the Attribute ID.	0E hex	8E hex	01 to 40 hex*1	8C hex*2 94 hex*3 B5 hex*5 BD hex*6	---	2 bytes 0000 to FFFF hex (0 to 65,535 decimal)
Operation Time Monitor Peak Value Reset	Reset	Resets to the present value the peak value for the operation time (unit: ms) specified by the Attribute ID.	05 hex	8E hex	01 to 40 hex*1	8C hex*2 94 hex*3 B5 hex*5 BD hex*6	2 bytes 0000 to FFFF hex (0 to 65,535 decimal)	---
Operation Time Monitor History Read	Read	Reads the history of the monitor status for the operation time (unit: ms) specified by the Attribute ID.	0E hex	8E hex	01 to 40 hex*1	8F hex*2 97 hex*3 B8 hex*5 C0 hex*6	---	1 byte 00 hex: Value not exceeded 01 hex: Value exceeded
Operation Time Monitor History Reset	Reset	Resets to 0 the history of the monitor status for the operation time (unit: ms) specified by the Attribute ID.	05 hex	8E hex	01 to 40 hex*1	8F hex*2 97 hex*3 B8 hex*5 C0 hex*6	---	---

Note (1) The Instance ID specifies the Slice I/O Unit's unit number (1 to 63 decimal).
(2) Specifies operation time 1.
(3) Specifies operation time 2.
(4) Reads data for both operation time 1 and operation time 2 (operation times 1, 2, 3, and 4 for Units with 8 inputs).
(5) Specifies input 3 (only for Units with 8 inputs).
(6) Specifies input 4 (only for Units with 8 inputs).

Setting Hold/Clear for Communications Errors (Output)

Explicit message	Read/ write	Function	Command					Response
			Service code	Class ID	Instance ID	Attribute ID	Data size	
Setting for Output Status (Hold or Clear) after Slice Bus Error*1	Read	Reads whether each output's status will be cleared or held when there is a slice bus error.	0E hex	8E hex	01 to 40 hex	83 hex	---	4 bytes Status of bits 00 to 32.*2 0: Clear 1: Hold
	Write	Sets whether each output's status will be cleared or held when there is a slice bus error.	10 hex	8E hex	01 to 40 hex	83 hex	4 bytes Settings for bits 00 to 32*2 0: Clear 1: Hold	---
Setting for Output Status (Hold or Clear) after Host Network Communications Error*1	Read	Reads whether each output's status will be cleared or held when there is a host network communications error.	0E hex	8E hex	01 to 40 hex	84 hex	---	4 bytes Status of bits 00 to 32.*2 0: Clear 1: Hold
	Write	Sets whether each output's status will be cleared or held when there is a host network communications error.	10 hex	8E hex	01 to 40 hex	84 hex	4 bytes Settings for bits 00 to 32.*2 0: Clear 1: Hold	---

Note (1) The default setting is for all outputs to be cleared (0).

(2) Bit numbers correspond to output numbers, e.g., bit 00 corresponds to output 0.

Writing Maintenance Information

Explicit message	Read/ write	Function	Command					Response
			Service code	Class ID	Instance ID	Attribute ID	Data size	
Maintenance Counter Save	Save	Records the maintenance counter in the Slice I/O Unit's memory.	16 hex	8D hex	01 to 40 hex*1	71 hex	--	---

Explicit Messages for Analog Slaves

Setting and Reading for Analog Input Units

Explicit message	Read /write	Function	Command					Response
			Service code	Class ID	Instance ID	Attribute ID	Data	
Analog Data 1 Value	Read	Reads the value for Analog Data 1.	0E hex	8F hex	01 to 40 hex*1	65 hex*2 8D hex*3		2 byte
Analog Data 2 Value	Read	Reads the value for Analog Data 2.	0E hex	8F hex	01 to 40 hex*1	68 hex*2 90 hex*3		2 bytes

Explicit message	Read /write	Function	Command					Response
			Service code	Class ID	Instance ID	Attribute ID	Data	
Number of AD Conversion Points Setting	Write/ Read	Sets the number of AD conversion points.	Write: 10 hex Read: 0E hex	8F hex	01 to 40 hex*1	64 hex	2 bytes	1 byte
Input Range Setting	Write/ Read	Sets the input range. –10 to 10 V: 0 0 to 5 V: 1 0 to 10 V: 2 4 to 20 mA: 3 1 to 5 V: 7 0 to 20 mA: 8	Write: 10 hex Read: 0E hex	8F hex	01 to 04 hex*1	66 hex*2 8E hex*3	1 byte	1 byte
Analog Status Flag Read	Read	Reads the status of the Analog Status Flags. LL = 0; L = 1; Pass signal = 2; H = 3; HH = 4; Valley shot = 5; Top shot = 6; Off-wire detection = 7	0E hex	8F hex	01 to 40 hex*1	69 hex*2 91 hex*3		1 byte
Analog Data 1 Allocation Selection	Write/ Read	Selects the data allocated to Analog Data 1. Analog input value: 0; Peak value: 1; Bottom value: 2; Top value: 3; Valley value: 4; Rate of change value: 5	Write: 10 hex Read: 0E hex	8F hex	01 to 40 hex*1	6B hex*2 93 hex*3	1 byte	1 byte
Analog Data 2 Allocation Selection	Write/ Read	Selects the data allocated to Analog Data 2. Analog input value: 0; Peak value: 1; Bottom value: 2; Top value: 3; Valley value: 4; Rate of change value: 5	Write: 10 hex Read: 0E hex	8F hex	01 to 40 hex*1	6C hex*2 94 hex*3	1 byte	1 byte
Function Setting	Write/ Read	Sets each function. Bit status: ON: Enabled, OFF: Disabled Moving average: 0; Scaling: 1; Peak/bottom hold: 2; Top/valley hold: 3; Comparator: 4; Cumulative counter: 5; Rate of change: 6	Write: 10 hex Read: 0E hex	8F hex	01 to 40 hex*1	6D hex*2 95 hex	1 byte	1 byte
Scaling Type Setting	Write/ Read	Default scaling: 0: User scaling: 1	Write: 10 hex Read: 0E hex	8F hex	01 to 40 hex*1	6E hex*2 96 hex	1 byte	1 byte
Scaling Point 1 Setting	Write/ Read	Sets an analog value as the 0% value for user scaling.	Write: 10 hex Read: 0E hex	8F hex	01 to 40 hex*1	6F hex*2 97 hex*3	2 bytes (–28000 to 28000)	2 bytes (–28000 to 28000)
Scaling Point 2 Setting	Write/ Read	Sets an analog value as the 100% value for user scaling.	Write: 10 hex Read: 0E hex	8F hex	01 to 40 hex*1	70 hex*2 98 hex*3	2 bytes (–28000 to 28000)	2 bytes (–28000 to 28000)

Explicit message	Read /write	Function	Command					Response
			Service code	Class ID	Instance ID	Attribute ID	Data	
Offset Compensation after Scaling	Write/ Read	Compensates for scaling errors after scaling with an offset value.	Write: 10 hex Read: 0E hex	8F hex	01 to 40 hex*1	71 hex*2 99 hex*3	2 bytes (–28000 to 28000)	2 bytes (–28000 to 28000)
Maximum Value Read	Read/ Reset	Reads the maximum value after power is turned ON.	Read: 0E hex Reset: 35 hex	8F hex	01 to 40 hex*1	72 hex*2 9A hex*3		2 bytes
Minimum Value Read	Read/ Reset	Reads the minimum value after power is turned ON.	Read: 0E hex Reset: 35 hex	8F hex	01 to 40 hex*1	73 hex*2 9B hex*3		2 bytes
Peak Value Read	Read	The peak value is held and read.	0E hex	8F hex	01 to 40 hex*1	74 hex*2 9C hex*3		2 bytes
Bottom Value Read	Read	The bottom value is held and read.	0E hex	8F hex	01 to 40 hex*1	75 hex*2 9D hex*3		2 bytes
Top Value Read	Read	The top value is held and read.	0E hex	8F hex	01 to 40 hex*1	76 hex*2 9E hex*3		2 bytes
Top Detection Timing Flag Read	Read	Reads the timing for detecting top values.	0E hex	8F hex	01 to 40 hex*1	77 hex*2 9F hex*3		1 byte
Valley Value Read	Read	The valley value is held and read.	0E hex	8F hex	01 to 40 hex*1	78 hex*2 A0 hex*3		2 bytes
Valley Detection Timing Flag Read	Read	Reads the timing for detecting valley values.	0E hex	8F hex	01 to 40 hex*1	79 hex*2 A1 hex*3		1 byte
HH Value Setting	Write/ Read	Sets the HH value.	Write: 10 hex Read: 0E hex	8F hex	01 to 40 hex*1	7C hex*2 A4 hex*3	2 bytes (–32768 to 32767)	2 bytes (–32768 to 32767)
LL Value Setting	Write/ Read	Sets the LL value.	Write: 10 hex Read: 0E hex	8F hex	01 to 40 hex*1	7D hex*2 A5 hex*3	2 bytes (–32768 to 32767)	2 bytes (–32768 to 32767)
H Value Setting	Write/ Read	Sets the H value.	Write: 10 hex Read: 0E hex	8F hex	01 to 40 hex*1	7E hex*2 A6 hex*3	2 bytes (–32768 to 32767)	2 bytes (–32768 to 32767)
L Value Setting	Write/ Read	Sets the L value.	Write: 10 hex Read: 0E hex	8F hex	01 to 40 hex*1	7F hex*2 A7 hex*3	2 bytes (–32768 to 32767)	2 bytes (–32768 to 32767)
Scaled Analog Input Value Read	Read	Reads analog input values for which have only been scaled.	0E hex	8F hex	01 to 40 hex*1	84 hex*2 AC hex*3		2 bytes
Rate of Change Value Read	Read	Reads the rate of change for each sampling cycle.	0E hex	8F hex	01 to 40 hex*1	85 hex*2 AD hex*3		2 bytes

Explicit message	Read /write	Function	Command					Response
			Service code	Class ID	Instance ID	Attribute ID	Data	
Sampling Cycle Setting	Write/ Read	Sets the sampling cycle for obtaining the rate of change based on the previous value.	Write: 10 hex Read: 0E hex	8F hex	01 to 40 hex*1	86 hex*2 AE hex*3	GRT1-AD2: 2 bytes (10 to 65535)	GRT1-AD2: 2 bytes (10 to 65535)
Cumulated Value Read	Read/ Reset	Reads the cumulated analog input value.	Read: 0E hex Reset: 35 hex	8F hex	01 to 40 hex*1	87 hex*2 AF hex*3		4 bytes (–214748364.8 to 214748364.7)
Cumulative Counter Flag Read	Read	Reads the cumulative count status in the Cumulative Counter Flag in the area for Generic Status Flags. 0: Counter overflow 1: Counter underflow 7: Set value overflow	Read: 0E hex	8F hex	01 to 40 hex*1	88 hex*2 B0 hex*3		1 byte
Cumulative Counter Monitor Value Setting	Write/ Read	Writes/reads the set monitor value for the cumulative counter.	Write: 10 hex Read: 0E hex	8F hex	01 to 40 hex*1	89 hex*2 B1 hex*3	4 bytes	4 bytes
Cumulative Counter Unit Setting	Write/ Read	Sets the unit for the cumulative counter. 0: Hour (count hours); 1: Minute (count minutes)	Write: 10 hex Read: 0E hex	8F hex	01 to 40 hex*1	8A hex*2 B2 hex*3	1 byte	1 byte

Note (1) The Instance ID specifies the Slice I/O Unit's unit number (1 to 64).
(2) Specifies input 0.
(3) Specifies input 1.

Setting and Reading for Analog Output Units

Explicit message	Read /write	Function	Command					Response
			Service code	Class ID	Instance ID	Attribute ID	Data Size	
Setting the Number of DA Conversion Points	Write/ Read	Sets the number of DA conversion points.	Write: 10 hex Read: 0E hex	90 hex	01 to 40 hex*1	64 hex	2 bytes	1 byte
Analog Output Value Read	Read	Reads analog output values.	0E hex	90 hex	01 to 40 hex*1	67 hex*2 7D hex*3		2 bytes
Output Range Setting	Write/ Read	Sets the output range. 4 to 20 mA: 0; 0 to 10 V: 1; 0 to 20 mA: 2; –10 to 10 V: 3; 0 to 5 V: 4; 1 to 5 V: 6	0E hex	90 hex	01 to 40 hex*1	68 hex*2 7E hex*3		1 byte

Explicit message	Read /write	Function	Command					Response
			Service code	Class ID	Instance ID	Attribute ID	Data Size	
Slice Bus Error Output Setting	Write/ Read	Sets the Slice Bus error output value for each output. 0: Hold last state 1: Low limit 2: High limit 3: Zero count Operation example: Turnback Cable disconnect.	Write: 10 hex Read: 0E hex	90 hex	01 to 40 hex*1	6C hex*2 82 hex*3	1 byte	1 byte
Communications Error Output Setting	Write/ Read	Sets the communications error output value for each output. 0: Hold last state 1: Low limit 2: High limit 3: Zero count Operation example: communications error in Communications Unit.	Write: 10 hex Read: 0E hex	90 hex	01 to 40 hex*1	6D hex*2 83 hex*3	1 byte	1 byte
Function Setting	Write/ Read	Sets the function. Scaling: 0; Cumulative counter: 1	Write: 10 hex Read: 0E hex	90 hex	01 to 40 hex*1	6F hex*2 85 hex*3	1 byte	1 byte
Scaling Type Setting	Write/ Read	Default scaling: 0: User scaling: 1	Write: 10 hex Read: 0E hex	90 hex	01 to 40 hex*1	70 hex*2 86 hex*3	1 byte	
Scaling Point 1 Setting	Write/ Read	Sets a conversion value as the 0% value for user scaling.	Write: 10 hex Read: 0E hex	90 hex	01 to 40 hex*1	71 hex*2 87 hex*3	2 bytes (–28000 to 28000)	2 bytes (–28000 to 28000)
Scaling Point 2 Setting	Write/ Read	Sets a conversion value as the 100% value for user scaling.	Write: 10 hex Read: 0E hex	90 hex	01 to 40 hex*1	72 hex*2 88 hex*3	2 bytes (–28000 to 28000)	2 bytes (–28000 to 28000)
Offset Compensation after Scaling	Write/ Read	Sets an offset to compensate for scaling error.	Write: 10 hex Read: 0E hex	90 hex	01 to 40 hex*1	73 hex*2 89 hex*3	2 bytes (–28000 to 28000)	2 bytes (–28000 to 28000)
Cumulated Value Read	Read/ Reset	Reads the cumulated analog output value.	Read: 0E hex Reset: 35 hex	90 hex	01 to 40 hex*1	77 hex*2 8D hex*3		4 bytes (–214748364.8 to 214748364.8)
Cumulative Counter Flag Read	Read	Reads the cumulative count status in the Cumulative Counter Flag in the area for Generic Status Flags. 0: Counter overflow 1: Counter underflow 7: Set value overflow	Read: 0E hex	90 hex	01 to 40 hex*1	78 hex*2 8E hex*3		1 byte

Explicit message	Read /write	Function	Command					Response
			Service code	Class ID	Instance ID	Attribute ID	Data Size	
Cumulative Counter Monitor Value Setting	Write/ Read	Writes/reads the set monitor value for the cumulative counter.	Write: 10 hex Read: 0E hex	90 hex	01 to 40 hex*1	79 hex*2 8F*3	4 bytes	4 bytes
Cumulative Counter Unit Setting	Write/ Read	Sets the unit for the cumulative counter. 0: Hour (count hours); 1: Minute (count minutes)	Write: 10 hex Read: 0E hex	90 hex	01 to 40 hex*1	7A hex*2 90 hex*3	1 byte	

Note (1) The Instance ID specifies the Slice I/O Unit's unit number (1 to 64).
(2) Specifies output 0.
(3) Specifies output 1.

Explicit Messages for Temperature Input Units

Explicit message	Read /write	Function	Command					Response
			Service code	Class ID	Instance ID	Attribute ID	Data	
Display Format Read (Normal or 1/100)	Read	Reads the display format. Normal display: 0 1/100 display: 1	0E hex	8F hex	01 to 40 hex*1	65 hex		1 byte
Temperature Data Value Read for Normal Display	Read	Reads the value of temperature data.	0E hex	8F hex*2 90 hex*3	01 to 40 hex*1	9A hex		2 bytes
Temperature Data Value Read for 1/100 Display	Read	Reads the value of temperature data.	0E hex	8F hex*2 90 hex*3	01 to 40 hex*1	6B hex		4 bytes
Input Type Set	Write/ Read	Sets the input type. GRT1-TS2P: PT100 (–200 to 850°C) = F hex PT100 (–200 to 200°C) = 11 hex GRT1-TS2PK: PT1000 (–200 to 850°C) =13 hex PT1000 (–200 to 200°C) =14 hex GRT1-TS2T: R = 00 hex, S = 01 hex, K1 = 02 hex, K2 = 03 hex, J1 = 04 hex, J2 = 05 hex, T = 06 hex, E = 07 hex, L1 = 08 hex, L2 = 09 hex, U = 0A hex, N = 0B hex, W = 0C hex, B = 0D hex, PL2 = 0E hex	Write: 10 hex Read: 0E hex	8F hex*2 90 hex*3	01 to 40 hex*1	97 hex	1 byte	1 byte

Explicit message	Read /write	Function	Command					Response
			Service code	Class ID	Instance ID	Attribute ID	Data	
User Adjustment Check	Read	Checks to see if user adjustment has been performed for the temperature conversion constant. User adjustment: 1 Default setting: 0	0E hex	8F hex*2 90 hex*3	01 to 40 hex*1	89 hex		1 byte
Display Unit Read	Read	Reads the display unit. °C: 1200, °F: 1201	0E hex	8F hex*2 90 hex*3	01 to 40 hex*1	69 hex		2 bytes
Temperature Status Flag Read	Read	Reads the status of the Temperature Status Flags. LL = 0; L = 1; Pass signal = 2; H = 3; HH = 4; Valley shot = 5; Top shot = 6; Off-wire detection = 7	0E hex	8F hex*2 90 hex*3	01 to 40 hex*1	73 hex		1 byte
Temperature Data Allocation Selection	Write/ Read	Selects the data allocated to Temperature Data 1. Temperature input value: 0; Peak value: 1; Bottom value: 2; Top value: 3; Valley value: 4; Rate of change value: 5	Write: 10 hex Read: 0E hex	8F hex*2 90 hex*3	01 to 40 hex*1	75 hex	1 byte	1 byte
Function Setting	Write/ Read	Sets each function. Bit status: ON: Enabled, OFF: Disabled Moving average: 0; Scaling: 1; Peak/bottom hold: 2; Top/valley hold: 3; Comparator: 4; Cumulative counter: 5; Rate of change: 6 Input error detection disabled: 7	Write: 10 hex Read: 0E hex	8F hex*2 90 hex*3	01 to 40 hex*1	77 hex	2 bytes	2 bytes
Scaling Point 1 Setting	Write/ Read	Sets an temperature value as the 0% value for user scaling.	Write: 10 hex Read: 0E hex	8F hex*2 90 hex*3	01 to 40 hex*1	79 hex	2 bytes	2 bytes
Scaling Point 2 Setting	Write/ Read	Sets an temperature value as the 100% value for user scaling.	Write: 10 hex Read: 0E hex	8F hex*2 90 hex*3	01 to 40 hex*1	7A hex	2 bytes	2 bytes
Offset Compensation after Scaling	Write/ Read	Sets an offset to compensate for scaling errors.	Write: 10 hex Read: 0E hex	8F hex*2 90 hex*3	01 to 40 hex*1	7B hex	2 bytes	2 bytes

Explicit message	Read /write	Function	Command					Response
			Service code	Class ID	Instance ID	Attribute ID	Data	
Maximum Value Read	Read/ Reset	Reads the maximum value after power is turned ON.	Read: 0E hex Reset: 35 hex	8F hex*2 90 hex*3	01 to 40 hex*1	7C hex		4 bytes
Minimum Value Read	Read/ Reset	Reads the minimum value after power is turned ON.	Read: 0E hex Reset: 35 hex	8F hex*2 90 hex*3	01 to 40 hex*1	7D hex		4 bytes
Peak Value Read	Read	The peak value while the hold function is operating is held and the peak value is read.	0E hex	8F hex*2 90 hex*3	01 to 40 hex*1	7E hex		4 bytes
Bottom Value Read	Read	The bottom value while the hold function is operating is held and the bottom value is read.	0E hex	8F hex*2 90 hex*3	01 to 40 hex*1	7F hex		4 bytes
Top Value Read	Read	The top value while the hold function is operating is held and the top value is read.	0E hex	8F hex*2 90 hex*3	01 to 40 hex*1	80 hex		4 bytes
Top Detection Timing Flag Read	Read	Reads the timing for detecting top values.	0E hex	8F hex*2 90 hex*3	01 to 40 hex*1	81 hex		1 byte
Valley Value Read	Read	The valley value while the hold function is operating is held and the valley value is read.	0E hex	8F hex*2 90 hex*3	01 to 40 hex*1	82 hex		4 bytes
Valley Detection Timing Flag Read	Read	Reads the timing for detecting valley values.	0E hex	8F hex*2 90 hex*3	01 to 40 hex*1	83 hex		1 byte
HH Value Setting	Write/ Read	Sets the HH value.	Write: 10 hex Read: 0E hex	8F hex*2 90 hex*3	01 to 40 hex*1	6D hex	4 bytes (–415000 to 415000)	4 bytes (–415000 to 415000)
LL Value Setting	Write/ Read	Sets the LL value.	Write: 10 hex Read: 0E hex	8F hex*2 90 hex*3	01 to 40 hex*1	6E hex	4 bytes (–415000 to 415000)	4 bytes (–415000 to 415000)
H Value Setting	Write/ Read	Sets the H value.	Write: 10 hex Read: 0E hex	8F hex*2 90 hex*3	01 to 40 hex*1	6F hex	4 bytes (–415000 to 415000)	4 bytes (–415000 to 415000)
L Value Setting	Write/ Read	Sets the L value.	Write: 10 hex Read: 0E hex	8F hex*2 90 hex*3	01 to 40 hex*1	70 hex	4 bytes (–415000 to 415000)	4 bytes (–415000 to 415000)

Explicit message	Read /write	Function	Command					Response
			Service code	Class ID	Instance ID	Attribute ID	Data	
Scaled Tempera-ture Input Value Read	Read	Reads temperature input values for which have only been scaled.	0E hex	8F hex*2 90 hex*3	01 to 40 hex*1	8B hex		4 bytes (–415000 to 415000)
Rate of Change Value Read	Read	Reads the rate of change for each sam-pling cycle.	0E hex	8F hex*2 90 hex*3	01 to 40 hex*1	8C hex		4 bytes (–415000 to 415000)
Sampling Cycle Set-ting	Write/ Read	Sets the sampling cycle for obtaining the rate of change based on the previous value. Set in multiples of 250 ms. (Default: 250 ms)	Write: 10 hex Read: 0E hex	8F hex*2 90 hex*3	01 to 40 hex*1	8D hex	2 bytes (250 to 65550)	2 bytes (250 to 65550)
Cumulated Value Read	Read/ Reset	Reads the cumulated temperature input value.	Read: 0E hex Reset: 35 hex	8F hex*2 90 hex*3	01 to 40 hex*1	8E hex		4 bytes (–214748364.8 to 214748364.7)
Cumulative Counter Flag Read	Read	Reads the cumulative count status in the Cumulative Counter Flag. 0: Counter overflow 1: Counter underflow 7: Set value overflow	0E hex	8F hex*2 90 hex*3	01 to 40 hex*1	8F hex		1 byte
Cumulative Counter Monitor Value Set-ting	Write/ Read	Writes/reads the set monitor value for the cumulative counter.	Write: 10 hex Read: 0E hex	8F hex*2 90 hex*3	01 to 40 hex*1	90 hex	4 bytes	4 bytes
Cumulative Counter Unit Setting	Write/ Read	Sets the unit for the cumulative counter. 0: Hour (count × hours); 1: Minute (count × minutes)	Write: 10 hex Read: 0E hex	8F hex*2 90 hex*3	01 to 40 hex*1	91 hex	1 byte	1 byte
Decimal Position Read	Read	Reads the position of the decimal point. 0000 = 0 0000.0 = 1 0000.00 = 2	0E hex	8F hex*2 90 hex*3	01 to 40 hex*1	98 hex		1 byte
Top/Valley Count Read	Read/ Reset	Reads the number of tops or valleys that have been counted.	Read: 0E hex Reset: 35 hex	8F hex*2 90 hex*3	01 to 40 hex*1	9E hex		4 bytes
Top/Valley Count Threshold Status Read	Read	Reads whether the top/valley count has exceeded the threshold value. 0: Counter overflow 1: Counter underflow 7: Set value overflow	0E hex	8F hex*2 90 hex*3	01 to 40 hex*1	9F hex		1 byte

Explicit message	Read /write	Function	Command					Response
			Service code	Class ID	Instance ID	Attribute ID	Data	
Top/Valley Counting Selection	Write/ Read	Selects counting either tops or valleys. Count tops = 0 Count valleys = 1	Write: 10 hex Read: 0E hex	8F hex*2 90 hex*3	01 to 40 hex*1	A0 hex	1 byte	1 byte
Top/Valley Count Threshold Set	Write/ Read	Sets the threshold value to compare with the top/valley count.	Write: 10 hex Read: 0E hex	8F hex*2 90 hex*3	01 to 40 hex*1	A1 hex	4 bytes	4 bytes
Tempera-ture Range Total Time Read	Read/ Reset	Reads (in seconds) the time the system has been in a user-set tem-perature range.	Read: 0E hex Reset: 35 hex	8F hex*2 90 hex*3	01 to 40 hex*1	A2 hex	4 bytes	4 bytes
Threshold Status for Tempera-ture Range Total Time Read	Read	Compares the time the system has been in a user-set temperature range with a threshold value. 0: Counter overflow 1: Counter underflow 7: Set value overflow	0E hex	8F hex*2 90 hex*3	01 to 40 hex*1	A3 hex		1 byte
Range for Tempera-ture Range Total Time Set	Write/ Read	Sets the range for tim-ing the time in the set temperature range. Above HH = 0, Between HH and H = 1, Pass = 2, Between L and LL = 3, Below LL = 4	Write: 10 hex Read: 0E hex	8F hex*2 90 hex*3	01 to 40 hex*1	A4 hex	1 byte	1 byte
Threshold for Compar-ison with Tempera-ture Range Total Time Set/Read	Write/ Read	Sets (in seconds) the threshold value that is compared to the time in the user-set tempera-ture range.	Write: 10 hex Read: 0E hex	8F hex*2 90 hex*3	01 to 40 hex*1	A5 hex	4 bytes	4 bytes
Data Com-parison between Channels Read	Read	Reads the result of data comparison between channels.	0E hex	8F hex*2 90 hex*3	01 to 40 hex*1	AB hex		4 bytes
Data Com-parison between Channels Threshold Compare	Read	Compares the result of data comparison between channels with a threshold value and outputs the result. 0: Counter overflow 1: Counter underflow 6: Invalid data 7: Set value overflow	0E hex	8F hex*2 90 hex*3	01 to 40 hex*1	AC hex		1 byte

Explicit message	Read /write	Function	Command					Response
			Service code	Class ID	Instance ID	Attribute ID	Data	
Data Comparison between Channels Threshold Set	Write/ Read	Sets the threshold for comparison with the result of data comparison between channels.	Write: 10 hex Read: 0E hex	8F hex*2 90 hex*3	01 to 40 hex*1	AD hex	4 bytes	4 bytes
Extension Status Flag Read	Read	Reads the Status Flags below. 1 to 7 OR = 0 1: Over range 2: Under range 3: Scaling overflow 4: Scaling underflow 5: Rate of change overflow 6: Rate of change underflow 7: Sensor off-wire condition	0E hex	8F hex*2 90 hex*3	01 to 40 hex*1	74 hex		1 byte

Note (1) The instance ID specifies the Slice I/O Unit's unit number (1 to 64).
(2) Specifies input 0.
(3) Specifies input 1.
(4) Parameter related to the data comparison between input 0 and input 1.
(5) Parameter related to the data comparison between input 1 and input 0.

Explicit Messages for Counter Units and Positioning Units

Explicit message	Read/ write	Function	Command					Response
			Service code	Class ID	Instance ID	Attribute ID	Data size	
Digital Input Monitor	Read	Reads the current status of the digital input.	0E hex	8E hex	01 to 40 hex*1	64 hex	---	1 byte 00 hex: OFF 01 hex: ON
Digital Input Name	Read	Reads the comment set for the digital input.	0E hex	8E hex	01 to 40 hex*1	65 hex	---	1 to 32 bytes Contains the stored comment in ASCII.
	Write	Writes the comment for the digital input.	10 hex	8E hex	01 to 40 hex*1	65 hex	1 to 32 bytes The comment to set in ASCII.	---

Explicit message	Read/ write	Function	Command					Response
			Service code	Class ID	Instance ID	Attribute ID	Data size	
Digital Input Maintenance Counter	Read	Reads the total ON time (unit: s) or number of contact operations (unit: operations) of the digital input.	0E hex	8E hex	01 to 40 hex*1	66 hex	---	4 bytes 0000 0000 to FFFF FFFF hex (0 to 4,294,967,295 decimal)
	Write	Writes the total ON time (unit: s) or number of contact operations (unit: operations) for the digital input.	10 hex	8E hex	01 to 40 hex*1	66 hex	4 bytes 0000 0000 to FFFF FFFF hex (0 to 4,294,967,295 decimal)	---
	Reset	Resets the total ON time (unit: s) or number of contact operations (unit: operations) of the digital input.	05 hex	8E hex	01 to 40 hex*1	66 hex	---	---
Digital Input Maintenance Counter Set Value	Read	Reads the set value for the total ON time (unit: s) or number of contact operations (unit: operations) of the digital input.	0E hex	8E hex	01 to 40 hex*1	67 hex	---	4 bytes 0000 0000 to FFFF FFFF hex (0 to 4,294,967,295 decimal)
	Write	Writes the set value for the total ON time (unit: s) or number of contact operations (unit: operations) for the digital input.	10 hex	8E hex	01 to 40 hex*1	67 hex	4 bytes 0000 0000 to FFFF FFFF hex (0 to 4,294,967,295 decimal)	---
Input Power Supply Monitor	Read	Reads the status of the input power supply. If there is more than one input power supply, an AND of the status of all the input power supplies is returned.	0E hex	8E hex	01 to 40 hex*1	70 hex	---	1 byte 00 hex: ON 01 hex: OFF

Explicit message	Read/ write	Function	Command					Response
			Service code	Class ID	Instance ID	Attribute ID	Data size	
Terminal Maintenance Information Mode Monitor of Digital Input	Read	Reads the monitor mode for maintenance information on the digital input.	0E hex	8E hex	01 to 40 hex*1	71 hex	---	4 bytes Status of bit 00 of 1st byte: 0: Total ON time mode 1: Contact operation counter mode All other bits will be 0.
	Write	Writes the monitor mode for maintenance information for the digital input.	10 hex	8E hex	01 to 40 hex*1	71 hex	4 bytes Status of bit 00 of 1st byte: 0: Total ON time mode 1: Contact operation counter mode Set all other bits to 0.	---
Monitor Status of Digital Input Maintenance Counter	Read	Reads the monitor status for the total ON time or number of contact operations for the digital input.	0E hex	8E hex	01 to 40 hex*1	72 hex	---	4 bytes Status of bit 00 of 1st byte: 0: In range 1: Out-of-range (over the monitor value)
Monitor Digital Output Status	Read	Reads the current status of digital outputs.*2	0E hex	8E hex	01 to 40 hex*1	OUT0: 76 hex	---	1 byte 00 hex: OFF 01 hex: ON
Digital Output Names	Read	Reads the comments set for digital outputs.*2	0E hex	8E hex	01 to 40 hex*1	OUT0: 77 hex	---	1 to 32 bytes Contains stored comment in ASCII.
	Write	Writes the comments for digital outputs.*2	10 hex	8E hex	01 to 40 hex*1	OUT0: 77 hex	1 to 32 bytes The comment to set in ASCII.	---
Digital Output Maintenance Counter	Read	Reads the total ON time (unit: s) or number of contact operations (unit: operations) for digital outputs.*2	0E hex	8E hex	01 to 40 hex*1	OUT0: 78 hex OUT1: 7C hex	---	4 bytes 0000 0000 to FFFF FFFF hex (0 to 4,294,967,295 decimal)
	Write	Writes the total ON time (unit: s) or number of contact operations (unit: operations) for digital outputs.*2	0 hex	8E hex	01 to 40 hex*1	OUT0: 78 hex OUT1: 7C hex	4 bytes 0000 0000 to FFFF FFFF hex (0 to 4,294,967,295 decimal)	---
	Reset	Resets the total ON time (unit: s) or number of contact operations (unit: operations) for digital outputs.*2	05 hex	8E hex	01 to 40 hex*1	OUT0: 78 hex OUT1: 7C hex	---	---

Explicit message	Read/ write	Function	Command					Response
			Service code	Class ID	Instance ID	Attribute ID	Data size	
Digital Output Maintenance Counter Set Values	Read	Reads the set values for the total ON time (unit: s) or number of contact operations (unit: operations) for digital outputs.*2	0E hex	8E hex	01 to 40 hex*1	OUT0: 79 hex OUT1: 7D hex	---	4 bytes 0000 0000 to FFFF FFFF hex (0 to 4,294,967,295 decimal)
	Write	Writes the set values for the total ON time (unit: s) or number of contact operations (unit: operations) for digital outputs.*2	10 hex	8E hex	01 to 40 hex*1	OUT0: 79 hex OUT1: 7D hex	4 bytes 0000 0000 to FFFF FFFF hex (0 to 4,294,967,295 decimal)	---
Output Power Supply Monitor	Read	Reads the status of the input power supply. If there is more than one output power supply, an AND of the status of all the output power supplies is returned.	0E hex	8E hex	01 to 40 hex*1	82 hex	---	1 byte 00 hex: OFF 01 hex: ON
Terminal Maintenance Information Monitor Mode of Digital Outputs	Read	Reads the monitor mode for maintenance information on digital outputs.*2	0E hex	8E hex	01 to 40 hex*1	83 hex	---	4 bytes Status of bits 00 (output 0) and 01 (output 1) of 1st byte: 0: Total ON time mode 1: Contact operation counter mode
	Write	Writes the monitor mode for maintenance information for digital outputs.*2	10 hex	8E hex	01 to 40 hex*1	83 hex	4 bytes Status of bits 00 (output 0) and 01 (output 1) of 1st byte: 0: Total ON time mode 1: Contact operation counter mode	---
Monitor Status of Digital Output Maintenance Counter	Read	Reads the monitor status for total ON time or number of contact operations of digital outputs.*2	0E hex	8E hex	01 to 40 hex*1	84 hex	---	4 bytes Status of bits 00 (output 0) and 01 (output 1) of 1st byte: 0: In range 1: Out-of-range (over the monitor value)
Counter Value	Read	Reads the present counter value.	0E hex	8E hex	01 to 40 hex*1	87 hex	---	4 bytes Range of values: –2,147,483,648 to 2,147,483,647

Explicit message	Read/ write	Function	Command					Response
			Service code	Class ID	Instance ID	Attribute ID	Data size	
Captured Counter Value	Read	Reads the last captured counter value.	0E hex	8E hex	01 to 40 hex*1	88 hex	---	4 bytes Range of values: –2,147,483,648 to 2,147,483,647
Counter Frequency	Read	Reads the present counter frequency (speed).	0E hex	8E hex	01 to 40 hex*1	89 hex	---	4 bytes Range of values: –100,000 to 100,000
Lower Limit of Range 0	Read	Reads the present lower limit of comparison range 0.*3	0E hex	8E hex	01 to 40 hex*1	8B hex	---	4 bytes Range of values: –2,147,483,648 to 2,147,483,647
Upper Limit of Range 0	Read	Reads the present upper limit of range 0.*3	0E hex	8E hex	01 to 40 hex*1	8C hex	---	4 bytes Range of values: –2,147,483,648 to 2,147,483,647
Lower Limit of Range 1	Read	Reads the present lower limit of range 1.*3	0E hex	8E hex	01 to 40 hex*1	8D hex	---	4 bytes Range of values: –2,147,483,648 to 2,147,483,647
Upper Limit of Range 1	Read	Reads the present upper limit of range 1.*3	0E hex	8E hex	01 to 40 hex*1	8E hex	---	4 bytes Range of values: –2,147,483,648 to 2,147,483,647
Preset Value	Read	Reads the present preset value.	0E hex	8E hex	01 to 40 hex*1	8F hex	---	4 bytes Range of values: –2,147,483,648 to 2,147,483,647
	Write	Writes the preset value.	10 hex	8E hex	01 to 40 hex*1	8F hex	4 bytes Range of values: –2,147,483,648 to 2,147,483,647	---
Counter Input Mode	Read	Reads the present counter input mode.	0E hex	8E hex	01 to 40 hex*1	90 hex	---	1 byte 00 hex: Phase differential ×1 01 hex: Phase differential ×2 02 hex: Phase differential ×4 03 hex: Pulse/direction 04 hex: Up/down
	Write	Writes the counter input mode.	10 hex	8E hex	01 to 40 hex*1	90 hex	1 byte 00 hex: Phase differential ×1 01 hex: Phase differential ×2 02 hex: Phase differential ×4 03 hex: Pulse /direction 04 hex: Up/down	---

Explicit message	Read/ write	Function	Command					Response
			Service code	Class ID	Instance ID	Attribute ID	Data size	
Action on Rising Edge of Digital Input	Read	Reads the action performed on the rising edge of the digital input.	0E hex	8E hex	01 to 40 hex*1	91 hex	---	1 byte 00 hex: No action 01 hex: Capture 02 hex: Reset 03 hex: Preset
	Write	Writes the action performed on the rising edge of the digital input.	10 hex	8E hex	01 to 40 hex*1	91 hex	1 byte 00 hex: No action 01 hex: Capture 02 hex: Reset 03 hex: Preset	---
Action on Falling Edge of Digital Input	Read	Reads the action performed on the falling edge of the digital input.	0E hex	8E hex	01 to 40 hex*1	92 hex	---	1 byte 00 hex: No action 01 hex: Capture 02 hex: Reset 03 hex: Preset
	Write	Writes the action performed on the falling edge of the digital input.	10 hex	8E hex	01 to 40 hex*1	92 hex	1 byte 00 hex: No action 01 hex: Capture 02 hex: Reset 03 hex: Preset	---
Action on Bus Error	Read	Reads the action performed when a bus error occurs. The same setting applies to all outputs.	0E hex	8E hex	01 to 40 hex*1	93 hex	---	1 byte 00 hex: Outputs are cleared on bus error. 01 hex: Output functionality is maintained on bus error.
	Write	Writes the action performed when a bus error occurs. The same setting applies to all outputs.	10 hex	8E hex	01 to 40 hex*1	93 hex	1 byte 00 hex: Outputs are cleared on bus error. 01 hex: Output functionality is maintained on bus error.	---
Configuration Tag	Read	Reads the present value of the configuration tag.	0E hex	8E hex	01 to 40 hex*1	94 hex	---	1 byte Range of values: 00 to FF hex (0 to 255 decimal)
	Write	Writes the value of the configuration tag.	10 hex	8E hex	01 to 40 hex*1	94 hex	1 byte Range of values: 00 to FF hex (0 to 255 decimal)	---
Range 0	Write	Writes the upper and lower limits of range 0.*3	33 hex	8E hex	01 to 40 hex*1	95 hex	2 × 4 bytes Range of values: 8000 0000 to 7FFF FFFF hex (-2,147,483,648 to 2,147,483,647 decimal)*4	---
Save Ranges and Preset Values	Write	Writes the range settings and preset value to non-volatile memory.	10 hex	8E hex	01 to 40 hex*1	97 hex	1 byte Value: 00 hex	---

Explicit message	Read/ write	Function	Command					Response
			Service code	Class ID	Instance ID	Attribute ID	Data size	
Action on Bus Idle	Write	Writes the action performed when the bus enters idle state.	0E hex	8E hex	01 to 40 hex*1	98 hex	1 byte 00 hex: Outputs are cleared on bus idle. 01 hex: Output functionality is maintained on bus idle.	---
	Read	Reads the action performed when the bus enters idle state.	0E hex	8E hex	01 to 40 hex*1	98 hex	---	1 byte 00 hex: Outputs are cleared on bus idle. 01 hex: Output functionality is maintained on bus idle.

Note (1) The Instance ID specifies the Slice I/O Unit's unit number (1 to 63 decimal).

(2) The data structure is as follows:
If you want to write "LL = 7FFF FFFF, UL = 8000 0000" use the following: FFFF FF7F 0000 0080.

Using Explicit Messages

The following example shows how to use explicit messages with a DeviceNet Communications Unit connected to a CS1W-DRM21 DeviceNet Unit.

Example: Sending a “Operation Time Monitor Peak Value Read” Command

Example: DeviceNet Unit’s node address: 05

Unit number: 0

Unit address: FE hex (or 10 hex)

DeviceNet Communication Unit’s node address: 11

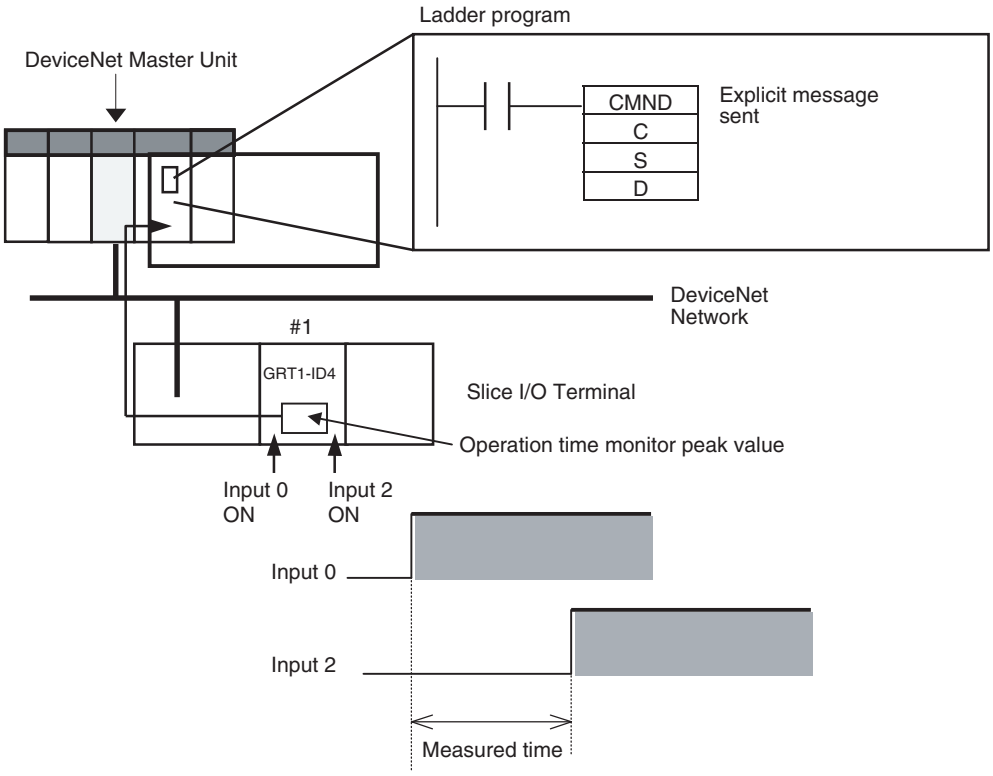

Operation

Reads the measured operation time (time required for input 2 to go ON after input 0 goes ON) of the Slice I/O Unit with unit number 1.

The data is read using the EXPLICIT MESSAGE SEND command (2801).

The command data is written in words starting from D01000 in the PLC and the response data is stored in words starting from D02000.

If the command does not end normally, the end code is stored in D00006 and the send command is re-executed.

Command Details

- [CMND S D C]
  S: D01000
  D (first response word): D02000
  C: D00000

Contents of S

Address	Contents (hex)	Meaning
D01000	28 01	Command code
D01001	0B 0E	DeviceNet Communications Unit's node address: 11 Service code: 0E hex
D01002	00 8E	Class ID: 008E hex
D01003	00 01	Instance ID: 0001 hex
D01004	8C **	Attribute ID: 8C ** hex (Set any value for the blank digits.)

Contents of C

Address	Contents (hex)	Meaning
D00000	00 09	Number of bytes of command data
D00001	00 0C	Number of bytes of response data
D00002	00 00	Destination DeviceNet Unit's network address: 0
D00003	05 FE	Destination DeviceNet Unit's node address: 5 Destination DeviceNet Unit's unit address: FE hex (or 10 hex)
D00004	00 00	Response required Communications port number: 0 Number of retries: 0
D00005	00 3C	Response monitoring time: 6 s

Response

Contents of D

Address	Contents (hex)	Meaning
D02000	28 01	
D02001	00 00	
D02002	00 02	
D02003	0B 8E	Response source node address: 11 (0B hex) Normal completion: 8E hex
D02004 to D02005	00 00	Operation time monitor peak value

Appendix B
Standard Models

Slice I/O Units

Model	Specifications
GRT1-ID4	Four-point DC Input Unit (NPN)
GRT1-ID4-1	Four-point DC Input Unit (PNP)
GRT1-OD4	Four-point Transistor Output Unit (NPN)
GRT1-OD4-1	Four-point Transistor Output Unit (PNP)
GRT1-OD4G-1	Four-point Transistor Output Unit (PNP) with overcurrent and short-circuit protection
GRT1-OD4G-3	Four-point 2-A Transistor Output Unit (PNP) with overcurrent and short-circuit protection
GRT1-ID8	Eight-point DC Input Unit (NPN)
GRT1-ID8-1	Eight-point DC Input Unit (PNP)
GRT1-OD8	Eight-point Transistor Output Unit (NPN)
GRT1-OD8-1	Eight-point Transistor Output Unit (PNP)
GRT1-OD8G-1	Eight-point Transistor Output Unit (PNP) with overcurrent and short-circuit protection
GRT1-IA4-1	Four-point AC Input Unit (Input voltage: 100 to 120 VAC 50/60 Hz)
GRT1-IA4-2	Four-point AC Input Unit (Input voltage: 200 to 240 VAC 50/60 Hz)
GRT1-ROS2	Two-point Relay Output Unit
GRT1-AD2	Two-point Analog Output Unit
GRT1-DA2V	Two-point Analog Voltage Output Unit
GRT1-DA2C	Two-point Analog Current Output Unit
GRT1-TS2P	Two-point Temperature Input Unit Resistance thermometer input, Input type: PT100 (–200 to 850°C) or PT100 (–200 to 200°C)
GRT1-TS2PK	Two-point Temperature Input Unit Resistance thermometer input, Input type: PT1000 (–200 to 850°C) or PT1000 (–200 to 200°C)
GRT1-TS2T	Two-point Temperature Input Unit Thermocouple input, Input type: R, S, K J, T, E, B, N, L, U, W, or PL2
GRT1-END	End Unit
GRT1-PD2	I/O Power Feed Unit
GRT1-PD2G	I/O Power Feed Unit with overcurrent protection
GRT1-PD8	I/O Power Feed Unit with 8 voltage and 4 ground terminals
GRT1-PD8-1	I/O Power Feed Unit with 4 voltage and 8 ground terminals
GRT1-PC8	I/O Power Connection Unit with 8 voltage and 4 ground terminals
GRT1-PC8-1	I/O Power Connection Unit with 4 voltage and 8 ground terminals
GRT1-TBR	Right Turnback Unit (Mounts to the right side of Slice I/O Terminal.)
GRT1-TBL	Left Turnback Unit (Mounts to the left side of Slice I/O Terminal. Can supply power to I/O Units.)
GRT1-CT1	Counter Unit with one counter (with encoder A and B inputs), 1 input settable to an encoder Z input or a digital input, and 1 digital output (NPN)
GRT1-CT1-1	Counter Unit with one counter (with encoder A and B inputs), 1 input settable to an encoder Z input or a digital input, and 1 digital output (PNP)
GRT1-CP1-L	Positioning Unit with one counter (with encoder A, B, and Z inputs), 1 digital input, and 2 digital outputs (PNP)

Communications Units

Model	Specifications
GRT1-DRT	DeviceNet Communications Unit for Slice I/O Terminals Up to 64 Slice I/O Units can be connected to one DeviceNet Communications Unit.
GRT1-PRT	PROFIBUS Communications Unit for Slice I/O Terminals. Up to 64 Slice I/O Units can be connected to one PROFIBUS Communications Unit.

Connecting Cable for Slice I/O Terminal Turnback Units

Model	Specifications
GCN2-100	Turnback Cable (1 m) Up to two cables (two blocks) can be connected to one DeviceNet Communications Unit.

Applicable Pin Terminals

One-pin Terminals

Manufacturer	Model	
PHOENIX CONTACT	AI-0.5-10WH	0.5 mm^2 (AWG 20)
	AI-0.75-10GY	0.75 mm^2 (AWG 18)
	AI-1.5-10BK	1.25 mm^2 (AWG 16)
Nihon Weidmuller	H 0.5/16 D	0.5 mm^2 (AWG 20)
	H 0.75/16 D	0.75 mm^2 (AWG 18)
	H 1.5/16 D	1.25 mm^2 (AWG 16)

Two-pin Terminals

Manufacturer	Model	
PHOENIX CONTACT	AI-TWIN 2 x 0.75-10GY	0.75 mm^2 (AWG 18)
Nihon Weidmuller	H 0.5/16.5 D	0.5 mm^2 (AWG 20)
	H 0.75/17 D	0.75 mm^2 (AWG 18)

Appendix C

Power Consumption and Weight Tables

Slice I/O Units

Model	Power supply power consumption	Weight
GRT1-ID4	1 W	76 g
GRT1-ID4-1	1 W	76 g
GRT1-OD4	1 W	76 g
GRT1-OD4-1	1 W	76 g
GRT1-OD4G-1	1 W	76 g
GRT1-OD4G-3	1.8 W	76 g
GRT1-ID8	1.5 W	80 g
GRT1-ID8-1	1.5 W	80 g
GRT1-OD8	1.2 W	80 g
GRT1-OD8-1	1.2 W	80 g
GRT1-OD8G-1	1.4 W	60 g
GRT1-IA4-1	1.0 W	76 g
GRT1-IA4-2	1.0 W	76 g
GRT1-ROS2	1 W	80 g
GRT1-AD2	1.5 W	82 g
GRT1-DA2V	1.5 W	82 g
GRT1-DA2C	2 W	82 g
GRT1-TS2P	1.5 W	86 g
GRT1-TS2PK	1.5 W	86 g
GRT1-TS2T	1.5 W	86 g
GRT1-CT1	1.1 W	80 g
GRT1-CT1-1	1.1 W	80 g
GRT1-CP1-L	1.2 W	80 g
GRT1-PD2	0.2 W	72 g
GRT1-PD2G	1.2 W	76 g
GRT1-PD8	0.2 W	75 g
GRT1-PD8-1	0.2 W	75 g
GRT1-PC8	0.2 W	75 g
GRT1-PC8-1	0.2 W	75 g
GRT1-TBR	0	56 g
GRT1-TBL	0	108 g

Communications Units

Model	Power supply power consumption	Weight
GRT1-DRT	3 W	137 g
GRT1-PRT	2.2 W	135 g

Appendix D

I/O Current Consumption Table

Model	Current consumption (mA)
GRT1-ID4	33
GRT1-ID4-1	33
GRT1-OD4	12
GRT1-OD4-1	12
GRT1-OD4G-1	12
GRT1-OD4G-3	10
GRT1-ID8	38
GRT1-ID8-1	38
GRT1-OD8	8
GRT1-OD8-1	8
GRT1-OD8G-1	17
GRT1-IA4-1	0
GRT1-IA4-2	0
GRT1-ROS2	30
GRT1-AD2	0
GRT1-DA2V	0
GRT1-DA2C	0
GRT1-TS2P	0
GRT1-TS2PK	0
GRT1-TS2T	0
GRT1-CT1	21
GRT1-CT1-1	21
GRT1-CP1-L	28
GRT1-END	0
GRT1-PD2	4
GRT1-PD2G	19
GRT1-PD8	4
GRT1-PD8-1	4
GRT1-PC8	4
GRT1-PC8-1	4
GRT1-TBR	0
GRT1-TBL	4

Appendix E

Precautions When Connecting Two-wire DC Sensors

When using a two-wire Sensor with a Communications Unit using DC inputs, check that the following conditions have been met. Failure to meet these conditions may result in operating errors.

Relationship between a DC Input-type Communications Unit's ON Voltage and a Sensor's Residual Voltage

$V_{ON} \leq V_{CC} - V_R$

V_{CC}: I/O power supply voltage (The allowable power supply voltage range is 20.4 to 26.4 V, so 20.4 V will be used here to allow for the worst possible conditions.)

V_{ON}: ON voltage for a Communications Unit with DC Inputs

V_R: Sensor's output residual voltage

It is sometimes possible to satisfy the above equation by adjusting the I/O power supply voltage (V_{CC}) to 26.4 V.

Relationship between a DC Input-type Communications Unit's ON Current and a Sensor's Control Output (Load Current)

I_{OUT} (min) $\leq I_{ON} \leq I_{OUT}$ (max.)

I_{OUT}: Sensor control output (load current)

I_{ON}: Communications Unit ON current

$I_{ON} = (V_{CC} - V_R - V_F)/R_{IN}$

V_F: Internal residual voltage of a Communications Unit with DC Inputs

R_{IN}: Input impedance of a Communications Unit with DC Inputs

When I_{ON} is smaller than I_{OUT} (min), connect a bleeder resistor R.

The bleeder resistor constant can be calculated using the following equation.

$R \leq (V_{CC} - V_R)/(I_{OUT}\text{ (min.)} - I_{ON})$

Power $W \geq (V_{CC} - V_R)^2/R \times 4$ [allowable margin]

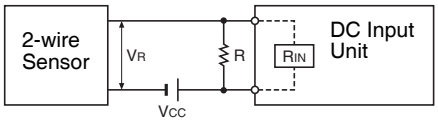

Relationship between a DC Input-type Communications Unit's OFF Current and a Sensor's Leakage Current

$I_{OFF} \geq I_{leak}$

I_{OUT}: OFF current of a Communications Unit with DC Inputs

I_{leak}: Sensor's leakage current

Connect a bleeder resistor if I_{leak} is greater than I_{OFF}.

The bleeder resistor constant can be calculated using the following equation.

$R \leq (I_{OFF} \times R_{IN} + V_F)/(I_{leak} - V_{OFF})$

Power $W \geq (V_{CC} - V_R)^2/R \times 4$ [allowable margin]

Index

A

Analog I/O Units, 7
- AD conversion points
  - setting, 4
- communications error output, 5
- comparator, 4
- comparison with earlier models, 90
- cumulative counter, 5
- data processing functions, 92
- Error History Window, 99
- I/O data, 94
- Maintenance Information Window, 97
- moving average, 4
- off-wire detection, 4
- overview, 90
- peak/bottom hold, 4
- rate of change, 4
- scaling, 4
- Status Areas, 95
- top/valley hold, 4
- user adjustment, 5

Analog Input Units
- AD conversion cycle time, 136
- AD conversion data, 106
- Alarm Status Area, 96
- analog data, 94, 109
- Analog Data + Top/Valley Detection Timing Flags, 94, 111
- analog data type, 108
- analog input value, 108
- Analog Status Flags, 94, 110
- bottom value, 93, 108
- comparator, 92
- conversion cycle calculation, 136
- conversion speed, 106
- cumulated value, 93
- cumulative counter, 92, 132
- default scaling, 115
- Hold Flags, 95, 111
- hysteresis, 122, 127
- I/O data, 106
- input range and conversion data, 103
- input range setting, 101
- last maintenance date, 92, 135
- moving average, 92
- moving average processing, 114
- number of AD conversion points, 92, 111
- OFF delay, 127
- offset compensation, 115
- off-wire detection, 92, 130
- one-shot time, 124
- operation results, 93
- peak value, 93, 108
- peak/bottom hold, 92, 118
- rate of change, 92, 93, 108
- rate of change calculation, 124
- scaling, 92
- top value, 93, 108
- Top/Valley Detection Timing Flags, 94, 109
- top/valley hold, 92, 120
- user adjustment, 92, 130
- user scaling, 115
- valley value, 93, 108
- Warning Status Area, 95

Analog Output Units
- Alarm Status Area, 97
- cumulative counter, 92, 150
- DA conversion data, 143
- default scaling, 144
- error output value, 92
- last maintenance date, 92
- offset compensation, 145
- output data, 95
- output range and conversion data, 141
- output signal range, 138
- scaling, 92
- setting output value for errors, 153
- user adjustment, 92, 148
- user scaling, 144
- Warning Status Area, 96

applicable pin terminals, 332

automatic restore function, 18

B

backup function, 17

baud rate
- automatic recognition, 3

C

cables, 9
- communications cables, xvii
- precautions, xvi, xvii

changing present values, xv

circuits
- precautions, xvi

command block, 303

comments

connected device, 3
communications error history
monitoring, 3, 26
Communications Unit
connecting to Slice I/O Units, 30
Communications Units, 7, 332
Connecting Cable, 9
Slice I/O Terminal Turnback Units, 332
connectors
precautions, xvi
Counter Units, 8, 226
Counter Units and Positioning Units
action on bus error, 226
action on bus idle, 227
Alarm Status Area, 228
capture, 226
comparison range, 6
comparison ranges, 226
counter frequency, 226
counter input modes, 6
data processing functions, 226
digital I/O, 226
Error History Tab Page, 234
General Tab Page, 231
I/O data, 227
I/O data details, 240
IN Tab Page, 233
last maintenance date, 227
Maintenance Information Window, 229
OUT Tab Page, 232
preset, 226
reset, 226
setting counter functions, 246
Status Areas, 227
Warning Status Area, 228
Z-reset, 226
crimp terminals, xvii

D

DC Input/Transistor Output Units, 7
DeviceNet Communications Unit, 7
Digital I/O Units, 7
Alarm Status Area, 46
contact operation counter, 4
Error History Tab Page, 64
General Tab Page, 61
I/O power supply
monitoring, 3
IN Tab Page, 62
input filter, 3
Maintenance Information Window, 60
operation time
monitoring, 4
Operation Time Tab Page, 63
OUT Tab Page, 62
output hold/clear setting, 59
sensor power ON delay, 3
status check boxes, 61
total ON time
monitoring, 4
Warning Status Area, 45

E

EC Directives, xviii
End Unit, 8
connecting, 32
ERR indicators, 13
error codes, 304
error history
reading, 287
explicit messages, 303, 304
using, 328

F

FALS instruction, xv
features
all Slice I/O Units, 2
force-setting/-resetting bits, xv
functions
Slice I/O Units, 9

G

grounding
precautions, xvi
GRT1-AD2, 99
GRT1-CT1(-1), 235
GRT1-DA2C, 137
GRT1-DA2V, 137
GRT1-END End Unit, 279
GRT1-ID4, 65
GRT1-ID4-1, 66
GRT1-OD4, 67
GRT1-OD4-1, 67

GRT1-OD4G-1, 67
GRT1-PD2 I/O Power Feed Unit, 275
GRT1-ROS2, 84
GRT1-series Units, 7
GRT1-TBL Left Turnback Unit, 274
GRT1-TBR Right Turnback Unit, 274
GRT1-TS2P, 167

I

I/O allocations
  data patterns, 16
  example, 15
  Master Unit, 14
I/O comments, 24
I/O current consumption, 335
I/O indicators, 13
I/O Power Connection Units, 8, 277
I/O Power Feed Unit, 275
I/O Power Feed Units, 8, 277
indicators, 12
indicators and error processing, 283
installation, 10, 30
  DIN Track, 32
  End Plates, 36
  Units, 33

L

last maintenance date, 3, 28
Left Turnback Unit, 8, 274

O

online replacement function, 19
outputs
  precautions, xv

P

packing
  precautions, xvii
parameters
  backing up and restoring, 3
pin terminal length, 47
pin terminals
  length, 40
Positioning Units, 8, 226
power consumption, 333
power supply, 37
  external I/O, 39
  precautions, xvi
  recommended, 40
  requirements, 37
  Units, 39
precautions
  application, xvi
  cables, xvi, xvii
  circuits, xvi
  connecting two-wire DC sensors, 337
  connectors, xvi
  EC Directives, xviii
  environment, xv
  general, xiv
  grounding, xvi
  packing, xvii
  power supply, xvi
  safety, xiv
  scan list, xvii
  switches, xvi
  wiring, xvii
PROFIBUS Communications Unit, 7

R

refreshing
  data, xv
Relay Output Unit, 7
remote I/O communications, 3
removing Units, 34
replacing Slice I/O Units
  online, 3, 19
response block, 303
Right Turnback Unit, 8

S

scan lists
  precautions, xvii
screwless clamping terminal block
  wiring, 47
Slice I/O Terminals, 2
Slice I/O Units, 331
  connecting additional Units, 31
specifications
  all Units, 12

general, 12
Slice I/O Units, 12
switches
rotary switches
precautions, xvi
System Units, 8

T

Temperature Input Units, 7
1/100 Display Mode, 181
Alarm Status Area, 163
comparator, 5, 159, 200
convertible temperature ranges, 175
cumulated count, 159
cumulative counter, 5
data comparison between channels, 6, 159, 205
data processing functions, 159
display modes, 180
Hold Flags, 162
hysteresis, 195, 201
I/O data, 161
input error detection
disabling, 5
input type, 172
input type range, 174
last maintenance date, 159, 208
Maintenance Information Window, 164
moving average, 5, 159
Normal Display Mode, 180
offset compensation, 189
off-wire detection, 5, 159, 208
one-shot time, 197
operation results, 159
overview, 156
peak/bottom hold, 5, 159, 191
rate of change, 5, 159
rate of change calculation, 198
scaling, 5, 159, 189
six-dial resistance box, 220
temperature cumulative counter, 209
temperature data, 160
temperature data 1/100 display mode, 185
Temperature Data Normal Mode + Top/Valley Detection Timing Flags, 186
temperature input value, 159
Temperature Status Flags, 162, 185
temperature zone counter, 6
top or valley count, 5
top/valley count, 159
top/valley counter, 197
Top/Valley Detection Timing Flags, 161, 185
top/valley hold, 5, 159, 193
user adjustment, 5, 159, 212
Warning Status Area, 162
terminal blocks, 2
transferring I/O memory, xv
transferring I/O memory data, xv
TS indicator, 13
Turnback Units
connecting, 41

U

unit comments, 3, 23
unit conduction time
monitoring, 20
unit conduction time (power ON time)
monitoring, 3
unit numbers
automatic allocation, 3

W

wire
recommended, 40
strip length, 40
wiring
clamping terminal block, 47
precautions, xvii
screwless clamping terminal block, 47

Revision History

A manual revision code appears as a suffix to the catalog number on the front cover of the manual.

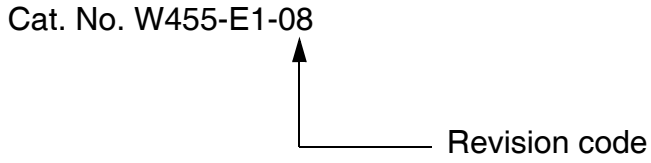

The following table outlines the changes made to the manual during each revision. Page numbers refer to the previous version.

Revision code	Date	Revised content
01	November 2005	Original production
02	March 2006	Revised to include Analog I/O Units.
03	July 2006	Revised to include Counter Units and Positioning Units.
04	March 2007	Revised to include the following Units: GRT1-OD4G-1, GRT1-ID8, GRT1-ID8-1, GRT1-OD8, GRT1-OD8-1, GRT1-OD8G-1, GRT1-PD8(-1), and GRT1-PC8(-1).
05	July 2007	Revised to include the Temperature Input Units.
06	November 2007	Revised to include the following Units: GRT1-IA4-1, GRT1-IA4-2, GRT1-TS2PK, GRT1-TS2T, GRT1-PD2G, and GRT1-OD4G-3.
07	December 2017	Corrected mistakes. **Page 20:** Added description on Unit Conduction Time.
08	December 2018	Corrected mistakes.

OMRON Corporation **Industrial Automation Company**
Kyoto, JAPAN
Contact: www.ia.omron.com

Regional Headquarters
OMRON EUROPE B.V.
Wegalaan 67-69, 2132 JD Hoofddorp
The Netherlands
Tel: (31)2356-81-300/Fax: (31)2356-81-388

OMRON ELECTRONICS LLC
2895 Greenspoint Parkway, Suite 200
Hoffman Estates, IL 60169 U.S.A.
Tel: (1) 847-843-7900/Fax: (1) 847-843-7787

OMRON ASIA PACIFIC PTE. LTD.
No. 438A Alexandra Road # 05-05/08 (Lobby 2),
Alexandra Technopark,
Singapore 119967
Tel: (65) 6835-3011/Fax: (65) 6835-2711

OMRON (CHINA) CO., LTD.
Room 2211, Bank of China Tower,
200 Yin Cheng Zhong Road,
PuDong New Area, Shanghai, 200120, China
Tel: (86) 21-5037-2222/Fax: (86) 21-5037-2200

Authorized Distributor:

© OMRON Corporation 2005 - 2018 All Rights Reserved.
In the interest of product improvement,
specifications are subject to change without notice.

Cat. No. W455-E1-08 1218