Cat. No. W343-E1-07

生産終了
DISCONTINUED

SYSMAC
CS/CJ Series

CS1W-ETN01 (10Base-5)
CS1W-ETN11 (10Base-T)
CJ1W-ETN11 (10Base-T)
Ethernet Units

OPERATION MANUAL

OMRON

CS1W-ETN01 (10Base-5)
CS1W-ETN11 (10Base-T)
CJ1W-ETN11 (10Base-T)
Ethernet Units

Operation Manual

Revised January 2008

Notice:

OMRON products are manufactured for use according to proper procedures by a qualified operator and only for the purposes described in this manual.

The following conventions are used to indicate and classify precautions in this manual. Always heed the information provided with them. Failure to heed precautions can result in injury to people or damage to property.

⚠ DANGER Indicates an imminently hazardous situation which, if not avoided, will result in death or serious injury. Additionally, there may be severe property damage.

⚠ WARNING Indicates a potentially hazardous situation which, if not avoided, could result in death or serious injury. Additionally, there may be severe property damage.

⚠ Caution Indicates a potentially hazardous situation which, if not avoided, may result in minor or moderate injury, or property damage.

OMRON Product References

All OMRON products are capitalized in this manual. The word “Unit” is also capitalized when it refers to an OMRON product, regardless of whether or not it appears in the proper name of the product.

The abbreviation “Ch,” which appears in some displays and on some OMRON products, often means “word” and is abbreviated “Wd” in documentation in this sense.

The abbreviation “PC” means Programmable Controller and is not used as an abbreviation for anything else.

Visual Aids

The following headings appear in the left column of the manual to help you locate different types of information.

Note Indicates information of particular interest for efficient and convenient operation of the product.

1,2,3... 1. Indicates lists of one sort or another, such as procedures, checklists, etc.

© OMRON, 2000

All rights reserved. No part of this publication may be reproduced, stored in a retrieval system, or transmitted, in any form, or by any means, mechanical, electronic, photocopying, recording, or otherwise, without the prior written permission of OMRON.

No patent liability is assumed with respect to the use of the information contained herein. Moreover, because OMRON is constantly striving to improve its high-quality products, the information contained in this manual is subject to change without notice. Every precaution has been taken in the preparation of this manual. Nevertheless, OMRON assumes no responsibility for errors or omissions. Neither is any liability assumed for damages resulting from the use of the information contained in this publication.

TABLE OF CONTENTS

PRECAUTIONS xvii

1 Intended Audience xviii
2 General Precautions xviii
3 Safety Precautions xviii
4 Operating Environment Precautions xix
5 Application Precautions xix
6 Conformance to EC Directives xxi

SECTION 1
Features and System Configuration 1

1-1 Features 2
1-2 System Configuration 3
1-3 Devices Required in a Network 4
1-4 Related Programming Devices 6
1-5 Specifications 7
1-6 Software Configuration 10
1-7 IP Addresses 12
1-8 Precautions 14

SECTION 2
Communications Functions 15

2-1 Communications Functions 16
2-2 FINS Communications 18
2-3 Socket Services 19
2-4 FTP Server 21
2-5 Mail 21

SECTION 3
Installation and Initial Setup 23

3-1 Before Operation 24
3-2 Overview of Startup Procedure 26
3-3 Unit Components 28
3-4 Switch Settings 33
3-5 Mounting to a PC 37
3-6 Connecting to the Network 39
3-7 Creating an I/O Table 45
3-8 Creating Routing Tables 46
3-9 System Setup 51
3-10 Creating an IP Address Table 52
3-11 Creating an IP Router Table 52
3-12 Checking Communications 53

TABLE OF CONTENTS

SECTION 4
System Setup and Memory Allocations 57

4-1 Allocated Words 58
4-2 CPU Bus Unit System Setup 59
4-3 CIO Area Allocations 67
4-4 DM Area Allocations 73

SECTION 5
FINS Communications 79

5-1 Overview of FINS Communications 80
5-2 Procedure Before Using FINS Communications 82
5-3 Sending Commands From a PC 83
5-4 Sending Commands From a Host Computer 96
5-5 FINS Server 102

SECTION 6
Socket Services 103

6-1 Overview 104
6-2 Using Socket Services with Socket Service Request Switches 112
6-3 Using Socket Services with CMND(490) 139

SECTION 7
FTP Server 161

7-1 Overview 162
7-2 Setting Login Names and Passwords 163
7-3 Using File Memory 163
7-4 FTP Server Application Example 167
7-5 Using FTP Commands 168
7-6 UNIX Application Example 174

SECTION 8
Mail 177

8-1 Overview of Mail Function 178
8-2 Sending Mail 182
8-3 Mail Example 182

SECTION 9
Testing Communications 185

9-1 Communications Testing Functions 186
9-2 PING Command 186
9-3 Internode Test 187

TABLE OF CONTENTS

SECTION 10
Troubleshooting 191

10-1 Troubleshooting with Indicators 192
10-2 Error Status 194
10-3 Error Log 194
10-4 Error Log Error Codes 195
10-5 Troubleshooting Procedures 197
10-6 Troubleshooting with Response Codes 207
10-7 Results Storage Area Response Codes 210

SECTION 11
FINS Commands Addressed to Ethernet Units 213

11-1 Command Codes and Response Codes 214
11-2 Socket Applications 215
11-3 Command/Response Reference 217

Appendices

A Network Installation 251
B Ethernet Network Parameters 261
C Buffer Configuration 263
D TCP Status Transitions 265
E Auxiliary Area Data 267
F CPU Bus Unit Allocations in the CPU Unit 269
G ASCII Characters 277
H Dimensions 279
I Maintenance 283
J Inspections 285

Index 287

Revision History 293

About this Manual:

This manual describes the installation and operation of the SYSMAC CS-series CS1W-ETN01 (10Base-5) and CS1W-ETN11 (10Base-T) Ethernet Units and the CJ-series CJ1W-ETN11 (10Base-T) Ethernet Unit, and includes the sections described on the next page.

An Ethernet Unit is classified and treated as a CPU Bus Unit in PC processing.

This manual is based on Ethernet* networks comprised of Ethernet Unit nodes and UNIX* host computer nodes. Although details can vary, theoretically any device supporting the same Ethernet protocols as the Ethernet Unit can form nodes on the network.

Note *Ethernet is a trademark of the Xerox Corporation. UNIX is a registered trademark of USL.

Please read this manual and all related manuals listed in the following table carefully and be sure you understand the information provided before attempting to install and operate an Ethernet Unit.

Name	Cat. No.	Contents
SYSMAC CS/CJ-series CS1W-ETN01/ETN11 CJ1W-ETN11 Ethernet Units Operation Manual (this manual)	W343-E1-□	Describes the installation and operation of the CS1W-ETN01 (10Base-5), CS1W-ETN11 (10Base-T), and CJ1W-ETN11 Ethernet Units. Refer to the *CX-Programmer User's Manual* for information on setting the CPU Bus Unit Setup for the Ethernet Unit. Refer to the *Communications Commands Reference Manual* (W342) for information on FINS commands that can be addressed to CS/CJ-series CPU Units.
SYSMAC CS/CJ-series CS1W-ETN21 CJ1W-ETN21 Ethernet Units Operation Manual (Construction of Networks)	W420-E1-□	Describes the basic settings and FINS communications for the CS1W-ETN21 (100Base-TX) and CJ1W-ETN21 (100Base-TX) Ethernet Units. Refer to the *Communications Commands Reference Manual* (W342) for information on FINS commands that can be addressed to CS/CJ-series CPU Units.
SYSMAC CS/CJ-series CS1W-ETN21 CJ1W-ETN21 Ethernet Units Operation Manual (Construction of Applications)	W421-E1-□	Provides information for the CS1W-ETN21 (100Base-TX) and CJ1W-ETN21 (100Base-TX) Ethernet Units on functions such as mail transmission, socket services, automatic clock adjustment, FTP server, and creating host applications with FINS communications.
SYSMAC CS-series CS1G/H-CPU□□-EV1, CS1G/H-CPU□□H Programmable Controllers Operation Manual	W339-E1-□	Provides an outline of and describes the design, installation, maintenance, and other basic operations for the CS-series PCs.
SYSMAC CJ-series CJ1G-CPU□□ Programmable Controllers Operation Manual	W393-E1-□	Provides an outline of and describes the design, installation, maintenance, and other basic operations for the CJ-series PCs.
SYSMAC CS/CJ-series CS1G/H-CPU□□-EV1, CS1G/H-CPU□□H, CJ1G/H-CPU□□H, CJ1M-CPU□□, CJ1G-CPU□□ Programmable Controllers Programming Manual	W394-E1-□	This manual describes programming and other methods to use the functions of the CS/CJ-series PCs.
SYSMAC CS/CJ-series CS1G/H-CPU□□-EV1, CS1G/H-CPU□□H, CJ1G/H-CPU□□H, CJ1M-CPU□□, CJ1G-CPU□□ Programmable Controllers Instructions Reference Manual	W340-E1-□	Describes the ladder diagram programming instructions supported by CS-series and CJ-series PCs.

Name	Cat. No.	Contents
SYSMAC CS/CJ-series C200H-PRO27-E, CQM1H-PRO01-E CQM1-PRO01-E Programming Consoles Operation Manual	W341-E1-□	Provides information on how to program and operate CS/CJ-series PCs using a Programming Console.
SYSMAC CS/CJ-series CS1G/H-CPU□□-EV1, CJ1G-CPU□□, CS1W-SCB21-V1/41-V1, CS1W-SCU21, CJ1W-SCU41 Communications Commands Reference Manual	W342-E1-□	Describes the C-series (Host Link) and FINS communications commands used with CS/CJ-series PCs.
SYSMAC WS02-CXPC1-EV3 CX-Programmer Ver. 3.1 Operation Manual	W414-E1-□	Provide information on how to use the CX-Programmer, a programming device that supports the CS/CJ-series PCs, and the CX-Net contained within CX-Programmer.
SYSMAC CS/CJ-series CS1W-SCB21-V1/41-V1, CS1W-SCU21 CJ1W-CSU41 Serial Communications Boards and Serial Communications Units Operation Manual	W336-E1-□	Describes the use of Serial Communications Units and Boards to perform serial communications with external devices, including the usage of standard system protocols for OMRON products.

This manual contains the following sections.

Section 1 introduces the overall structure of an Ethernet network, outlines the features of the Ethernet Unit, describes the communications protocols used by an Ethernet network, and provides basic precautions for use of an Ethernet network.

Section 2 provides an overview of the communications functions that can be used with the Ethernet Unit.

Section 3 explains how to install the Ethernet Unit and make the initial settings required for operation.

Section 4 explains the system setup and the words allocated in the CIO Area and the DM Area for Ethernet Unit operations.

Section 5 provides information on communicating on Ethernet networks and interconnected networks using FINS commands. The information provided in the section deals only with FINS communications in reference to Ethernet Units. FINS commands issued from a PC are sent via the SEND(090), RECV(098), and CMND(490) instructions programmed into the user ladder-diagram program. Refer to the *CS/CJ-series CS1G/H-CPU□□-E, CJ1G-CPU□□ Programmable Controllers Instruction Reference Manual* (W340) for further details on programming these instructions.

Section 6 describes the functionality provided by the Ethernet Unit via the socket services.

Section 7 describes the functions provided by the FTP server.

Section 8 explains the Ethernet Unit's mail function.

Section 9 describes functions that allow you to test communications.

Section 10 describes information and procedures that can be used to troubleshoot problems that sometimes occur with Ethernet Unit and Ethernet communications.

Section 11 describes the FINS commands that can be sent to an Ethernet Unit and the responses that are returned by the Ethernet Unit.

Various ***Appendices*** are provided for reference. Refer to the table of contents for a list of the appendices.

⚠ WARNING Failure to read and understand the information provided in this manual may result in personal injury or death, damage to the product, or product failure. Please read each section in its entirety and be sure you understand the information provided in the section and related sections before attempting any of the procedures or operations given.

Read and Understand this Manual

Please read and understand this manual before using the product. Please consult your OMRON representative if you have any questions or comments.

Warranty and Limitations of Liability

WARRANTY
OMRON's exclusive warranty is that the products are free from defects in materials and workmanship for a period of one year (or other period if specified) from date of sale by OMRON. OMRON MAKES NO WARRANTY OR REPRESENTATION, EXPRESS OR IMPLIED, REGARDING NON-INFRINGEMENT, MERCHANTABILITY, OR FITNESS FOR PARTICULAR PURPOSE OF THE PRODUCTS. ANY BUYER OR USER ACKNOWLEDGES THAT THE BUYER OR USER ALONE HAS DETERMINED THAT THE PRODUCTS WILL SUITABLY MEET THE REQUIREMENTS OF THEIR INTENDED USE. OMRON DISCLAIMS ALL OTHER WARRANTIES, EXPRESS OR IMPLIED.

LIMITATIONS OF LIABILITY
OMRON SHALL NOT BE RESPONSIBLE FOR SPECIAL, INDIRECT, OR CONSEQUENTIAL DAMAGES, LOSS OF PROFITS OR COMMERCIAL LOSS IN ANY WAY CONNECTED WITH THE PRODUCTS, WHETHER SUCH CLAIM IS BASED ON CONTRACT, WARRANTY, NEGLIGENCE, OR STRICT LIABILITY. In no event shall the responsibility of OMRON for any act exceed the individual price of the product on which liability is asserted. IN NO EVENT SHALL OMRON BE RESPONSIBLE FOR WARRANTY, REPAIR, OR OTHER CLAIMS REGARDING THE PRODUCTS UNLESS OMRON'S ANALYSIS CONFIRMS THAT THE PRODUCTS WERE PROPERLY HANDLED, STORED, INSTALLED, AND MAINTAINED AND NOT SUBJECT TO CONTAMINATION, ABUSE, MISUSE, OR INAPPROPRIATE MODIFICATION OR REPAIR.

Application Considerations

SUITABILITY FOR USE

OMRON shall not be responsible for conformity with any standards, codes, or regulations that apply to the combination of products in the customer's application or use of the products.

At the customer's request, OMRON will provide applicable third party certification documents identifying ratings and limitations of use that apply to the products. This information by itself is not sufficient for a complete determination of the suitability of the products in combination with the end product, machine, system, or other application or use.

The following are some examples of applications for which particular attention must be given. This is not intended to be an exhaustive list of all possible uses of the products, nor is it intended to imply that the uses listed may be suitable for the products:

- Outdoor use, uses involving potential chemical contamination or electrical interference, or conditions or uses not described in this manual.
- Nuclear energy control systems, combustion systems, railroad systems, aviation systems, medical equipment, amusement machines, vehicles, safety equipment, and installations subject to separate industry or government regulations.
- Systems, machines, and equipment that could present a risk to life or property.

Please know and observe all prohibitions of use applicable to the products.

NEVER USE THE PRODUCTS FOR AN APPLICATION INVOLVING SERIOUS RISK TO LIFE OR PROPERTY WITHOUT ENSURING THAT THE SYSTEM AS A WHOLE HAS BEEN DESIGNED TO ADDRESS THE RISKS, AND THAT THE OMRON PRODUCTS ARE PROPERLY RATED AND INSTALLED FOR THE INTENDED USE WITHIN THE OVERALL EQUIPMENT OR SYSTEM.

PROGRAMMABLE PRODUCTS

OMRON shall not be responsible for the user's programming of a programmable product, or any consequence thereof.

Disclaimers

CHANGE IN SPECIFICATIONS

Product specifications and accessories may be changed at any time based on improvements and other reasons.

It is our practice to change model numbers when published ratings or features are changed, or when significant construction changes are made. However, some specifications of the products may be changed without any notice. When in doubt, special model numbers may be assigned to fix or establish key specifications for your application on your request. Please consult with your OMRON representative at any time to confirm actual specifications of purchased products.

DIMENSIONS AND WEIGHTS

Dimensions and weights are nominal and are not to be used for manufacturing purposes, even when tolerances are shown.

PERFORMANCE DATA

Performance data given in this manual is provided as a guide for the user in determining suitability and does not constitute a warranty. It may represent the result of OMRON's test conditions, and the users must correlate it to actual application requirements. Actual performance is subject to the OMRON Warranty and Limitations of Liability.

ERRORS AND OMISSIONS

The information in this manual has been carefully checked and is believed to be accurate; however, no responsibility is assumed for clerical, typographical, or proofreading errors, or omissions.

PRECAUTIONS

This section provides general precautions for using the CS/CJ-series Programmable Controllers (PCs) and related devices.

The information contained in this section is important for the safe and reliable application of Programmable Controllers. You must read this section and understand the information contained before attempting to set up or operate a PC system.

1 Intended Audience xviii
2 General Precautions xviii
3 Safety Precautions xviii
4 Operating Environment Precautions xix
5 Application Precautions xix
6 Conformance to EC Directives xxi

1 Intended Audience

This manual is intended for the following personnel, who must also have knowledge of electrical systems (an electrical engineer or the equivalent).

- Personnel in charge of installing FA systems.
- Personnel in charge of designing FA systems.
- Personnel in charge of managing FA systems and facilities.

2 General Precautions

The user must operate the product according to the performance specifications described in the operation manuals.

Before using the product under conditions which are not described in the manual or applying the product to nuclear control systems, railroad systems, aviation systems, vehicles, combustion systems, medical equipment, amusement machines, safety equipment, and other systems, machines, and equipment that may have a serious influence on lives and property if used improperly, consult your OMRON representative.

Make sure that the ratings and performance characteristics of the product are sufficient for the systems, machines, and equipment, and be sure to provide the systems, machines, and equipment with double safety mechanisms.

This manual provides information for programming and operating the Unit. Be sure to read this manual before attempting to use the Unit and keep this manual close at hand for reference during operation.

⚠ WARNING It is extremely important that a PC and all PC Units be used for the specified purpose and under the specified conditions, especially in applications that can directly or indirectly affect human life. You must consult with your OMRON representative before applying a PC System to the above-mentioned applications.

3 Safety Precautions

⚠ WARNING Do not attempt to take any Unit apart while the power is being supplied. Doing so may result in electric shock.

⚠ WARNING Do not touch any of the terminals or terminal blocks while the power is being supplied. Doing so may result in electric shock.

⚠ WARNING Do not attempt to disassemble, repair, or modify any Units. Any attempt to do so may result in malfunction, fire, or electric shock.

⚠ WARNING Do not touch the Power Supply Unit while power is being supplied or immediately after power has been turned OFF. Doing so may result in electric shock.

⚠ Caution Tighten the screws on the terminal block of the AC Power Supply Unit to the torque specified in the operation manual. The loose screws may result in burning or malfunction.

⚠ **Caution** Execute online edit only after confirming that no adverse effects will be caused by extending the cycle time. Otherwise, the input signals may not be readable.

4 Operating Environment Precautions

⚠ **Caution** Do not operate the control system in the following places:

- Locations subject to direct sunlight.
- Locations subject to temperatures or humidity outside the range specified in the specifications.
- Locations subject to condensation as the result of severe changes in temperature.
- Locations subject to corrosive or flammable gases.
- Locations subject to dust (especially iron dust) or salts.
- Locations subject to exposure to water, oil, or chemicals.
- Locations subject to shock or vibration.

⚠ **Caution** Take appropriate and sufficient countermeasures when installing systems in the following locations:

- Locations subject to static electricity or other forms of noise.
- Locations subject to strong electromagnetic fields.
- Locations subject to possible exposure to radioactivity.
- Locations close to power supplies.

⚠ **Caution** The operating environment of the PC System can have a large effect on the longevity and reliability of the system. Improper operating environments can lead to malfunction, failure, and other unforeseeable problems with the PC System. Be sure that the operating environment is within the specified conditions at installation and remains within the specified conditions during the life of the system. Follow all installation instructions and precautions provided in the operation manuals.

5 Application Precautions

Observe the following precautions when using the PC System.

⚠ **WARNING** Always heed these precautions. Failure to abide by the following precautions could lead to serious or possibly fatal injury.

- Always connect to a ground of 100 Ω or less when installing the Units. Not connecting to a ground to a ground of 100 Ω or less may result in electric shock.
- A ground of 100 Ω or less must be installed when shorting the GR and LG terminals on the Power Supply Unit.
- Always turn OFF the power supply to the PC before attempting any of the following. Not turning OFF the power supply may result in malfunction or electric shock.

- Mounting or dismounting I/O Units, CPU Units, Inner Boards, or any other Units.
- Assembling the Units.
- Setting DIP switches or rotary switches.
- Connecting cables or wiring the system.

⚠ **Caution** Failure to abide by the following precautions could lead to faulty operation of the PC or the system, or could damage the PC or PC Units. Always heed these precautions.

- Fail-safe measures must be taken by the customer to ensure safety in the event of incorrect, missing, or abnormal signals caused by broken signal lines, momentary power interruptions, or other causes.
- Interlock circuits, limit circuits, and similar safety measures in external circuits (i.e., not in the Programmable Controller) must be provided by the customer.
- Always use the power supply voltages specified in the operation manuals. An incorrect voltage may result in malfunction or burning.
- Take appropriate measures to ensure that the specified power with the rated voltage and frequency is supplied. Be particularly careful in places where the power supply is unstable. An incorrect power supply may result in malfunction.
- Install external breakers and take other safety measures against short-circuiting in external wiring. Insufficient safety measures against short-circuiting may result in burning.
- Be sure that all the mounting screws, terminal screws, and cable connector screws are tightened to the torque specified in the relevant manuals. Incorrect tightening torque may result in malfunction.
- Leave the label attached to the Unit when wiring. Removing the label may result in malfunction if foreign matter enters the Unit.
- Remove the label after the completion of wiring to ensure proper heat dissipation. Leaving the label attached may result in malfunction.
- Use crimp terminals for wiring. Do not connect bare stranded wires directly to terminals. Connection of bare stranded wires may result in burning.
- Wire all connections correctly.
- Double-check all wiring and switch settings before turning ON the power supply. Incorrect wiring may result in burning.
- Mount Units only after checking terminal blocks and connectors completely.
- Be sure that the terminal blocks, Memory Units, expansion cables, and other items with locking devices are properly locked into place. Improper locking may result in malfunction.
- Check the user program for proper execution before actually running it on the Unit. Not checking the program may result in an unexpected operation.
- Do not lay communications cables near power lines or high-voltage lines.
- Always lay communications cables in ducts.

- Do not pull on the communications cables or bend the communications cables beyond their natural limit. Doing either of these may break the cables.
- Do not place objects on top of the communications cables or other wiring lines. Doing so may break the cables.
- Before touching a Unit, be sure to first touch a grounded metallic object in order to discharge any static built-up. Not doing so may result in malfunction or damage.
- When transporting or storing Units, place them in special packing boxes and do not allow them to be subject to excessive shock or vibration during transportation.
- Confirm that no adverse effect will occur in the system before attempting any of the following. Not doing so may result in an unexpected operation.
  - Changing the operating mode of the PC.
  - Force-setting/force-resetting any bit in memory.
  - Changing the present value of any word or any set value in memory.

6 Conformance to EC Directives

6-1 Applicable Directives

- EMC Directives
- Low Voltage Directive

6-2 Concepts

EMC Directives

OMRON devices that comply with EC Directives also conform to the related EMC standards so that they can be more easily built into other devices or the overall machine. The actual products have been checked for conformity to EMC standards (see the following note). Whether the products conform to the standards in the system used by the customer, however, must be checked by the customer.

EMC-related performance of the OMRON devices that comply with EC Directives will vary depending on the configuration, wiring, and other conditions of the equipment or control panel on which the OMRON devices are installed. The customer must, therefore, perform the final check to confirm that devices and the overall machine conform to EMC standards.

Note Conformance with the EMC (Electromagnetic Compatibility) standards for EMS (Electromagnetic Susceptibility) and EMI (Electromagnetic Interference) vary with the model in the way shown below.

Ethernet Unit	EMS	EMI
CS1W-ETN01/11	EN61131-2	EN61000-6-4 (Radiated emission: 10-m regulations)
CJ1W-ETN11	EN61000-6-2	

Low Voltage Directive

Always ensure that devices operating at voltages of 50 to 1,000 VAC and 75 to 1,500 VDC meet the required safety standards for the PC (EN61131-2).

SECTION 1
Features and System Configuration

This section introduces the overall structure of an Ethernet network, outlines the features of the Ethernet Unit, describes the communications protocols used by an Ethernet network, and provides basic precautions for use of an Ethernet network.

1-1 Features 2
1-2 System Configuration 3
1-2-1 Device Configuration 3
1-2-2 Node Connections. 3
1-3 Devices Required in a Network 4
1-3-1 10Base-5 Ethernet Unit. 4
1-3-2 10Base-T Ethernet Unit 5
1-4 Related Programming Devices 6
1-5 Specifications 7
1-6 Software Configuration. 10
1-7 IP Addresses 12
1-7-1 IP Address Configuration 12
1-7-2 Allocating IP Addresses 12
1-7-3 IP Address Settings. 13
1-7-4 Subnet Masks 13
1-8 Precautions 14
1-8-1 Installation 14
1-8-2 Ethernet and IEEE802.3 Standards. 14

1-1 Features

Select from 10Base-5 or 10Base-T

Three models of Ethernet Unit are provided to support both 10Base-5 (CS1W-ETN01) and 10Base-T (CS1W-ETN11/CJ1W-ETN11) Ethernet transmission media.

Wide-ranging Control Capability Using Ethernet

The Ethernet Unit enables a Programmable Controller (PC) to support a wide range of protocols via Ethernet, including data communications by TCP/IP and UDP/IP socket services, FINS command execution (OMRON's standard protocol), FTP file transfers, and SMTP message communications.

Communications by UDP/IP and TCP/IP

The Ethernet Unit supports the standard Ethernet protocols, UDP/IP and TCP/IP, so it can communicate with other Ethernet devices, workstations, personal computers, and Ethernet Units produced by other manufacturers. It can utilize up to eight socket ports for the various protocols, allowing it to be employed in a wide range of applications.

Easy Use of Socket Services

TCP or UDP socket services can be easily accessed either by executing the CMND(490) instruction or by presetting parameters and then manipulating dedicated control switches in memory. Presetting parameters eliminates the need for ladder programs to monitor the completion timing of instructions and socket service processing, and thereby reduces the work hours involved in program development.

FINS Message Communications (FINS Communications Service Using UDP/IP)

The Ethernet Unit also supports FINS message communications, OMRON's standard communications service, so other OMRON PCs can be accessed by using SEND(090), RECV(098), and CMND(490) instructions in ladder programs. In addition, the FINS gateway function can be used to allow access to other PCs on not only the same Ethernet network but also on other networks such as Controller Link and SYSMAC Link.

File Transfers Between PC and Host Computer (FTP Server Function)

The Ethernet Unit has a built-in FTP server function, so any workstation or personal computer with an FTP client function can be used for reading files from or writing files to the PC. This enables large amounts of data to be transferred at one time without any need for writing a ladder program.

E-mail Capability

User-defined messages, Unit error information, status information, and so on, can be sent from the PC to the mail server as e-mail. This function allows information generated at the production site to be sent out as e-mail.

24-VDC Power Supply for Transceiver

For the CS1W-ETN01 (10Base-5), a 24-VDC power supply can be used as the power supply for the transceiver. The Ethernet Unit voltage output provides for a voltage drop in the transceiver cables, so there is no need to adjust the power supply voltage.

Controller Link Network Connection

Ethernet, the information-system network, can be connected to Controller Link, the control-system network, using the FINS communications service. This allows a PC on the Controller Link network to be monitored from a PC on the Ethernet network, and, conversely, for data to be exchanged between a PC on the Controller Link network and a PC on the Ethernet network.

Abundant Troubleshooting Functions

The Ethernet Unit is provided with a variety of troubleshooting functions for prompt recovery in case of errors.

- Self-diagnostic function at startup
- PING command for checking remote nodes
- Inter-nodal tests for checking remote nodes
- Error log for recording error history data
- E-mail notification when errors occur

1-2 System Configuration

1-2-1 Device Configuration

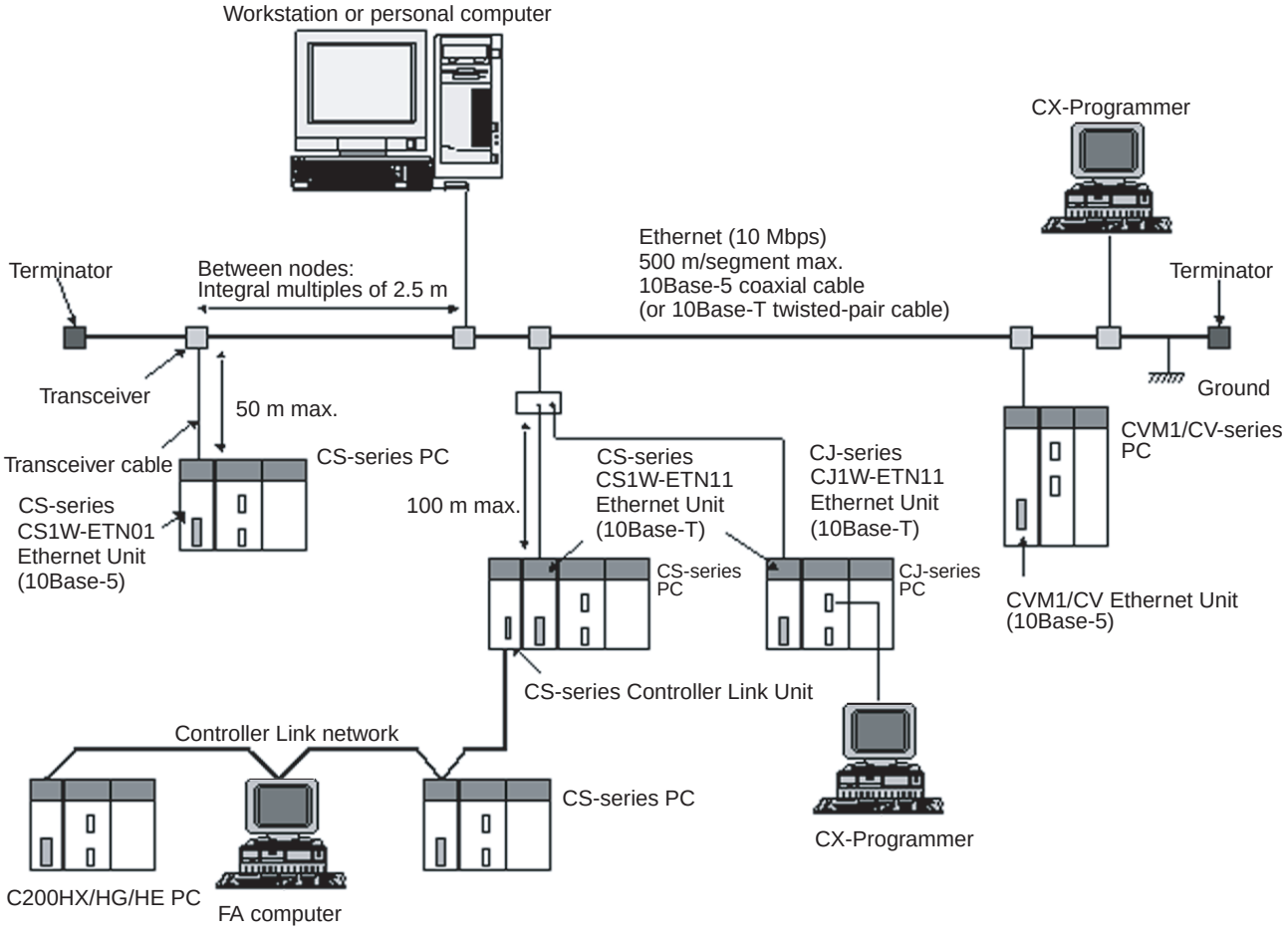

Note
1. Transmission distance (from Terminator to Terminator): 500 meters/segment max.
2. When segments are indirectly connected by a repeater: 2.5 km/network
3. Node interval (from transceiver to transceiver): Integral multiples of 2.5 m
4. Transceiver cable length: 50 m max.

1-2-2 Node Connections

Minimal Configuration: 1 Segment

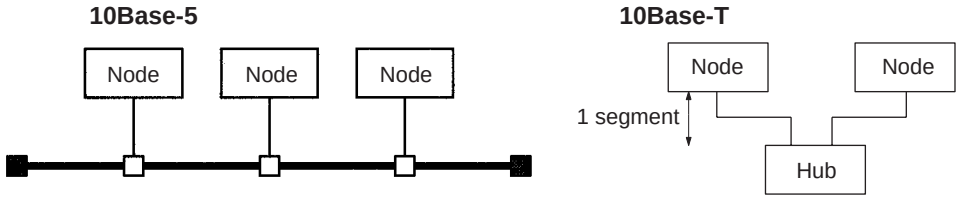

Configuration With Segment Extension

Use repeaters to extend the distance between nodes or to increase the number of connected nodes.

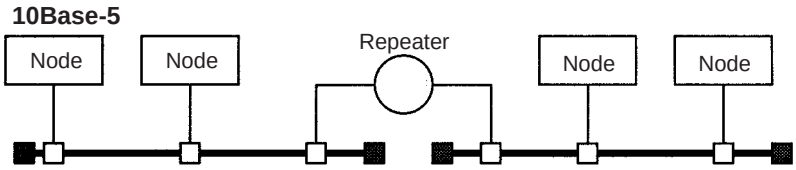

1-3 Devices Required in a Network

1-3-1 10Base-5 Ethernet Unit

The basic configuration of a 10Base-5 Ethernet System consists of a single coaxial cable together with the transceivers, transceiver cables, nodes, and so on, that are connected to it. In an Ethernet System, this basic configuration is called a “segment.”

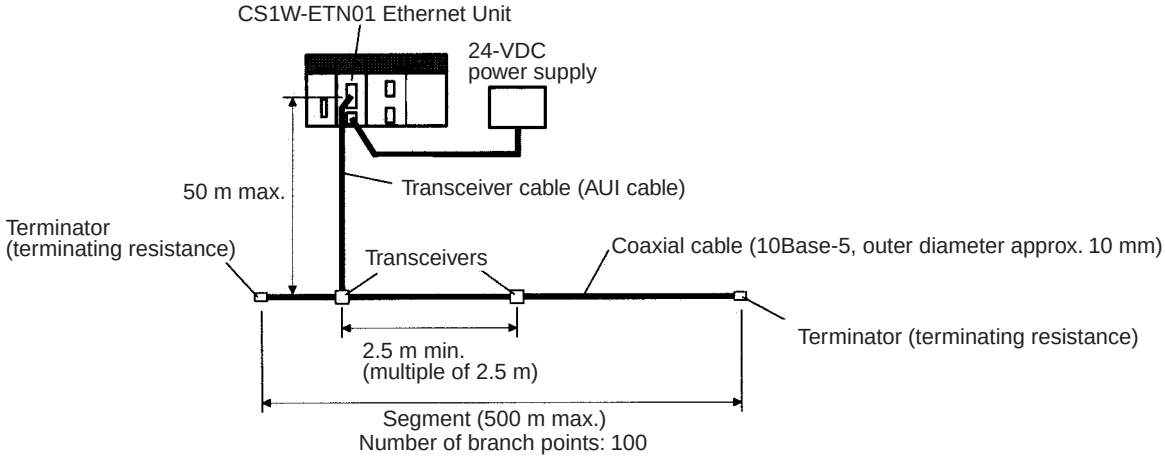

The devices shown in the following table must be obtained to configure a network using a 10Base-5 Ethernet Unit, so prepare them in advance. Use only devices in the network that conform to IEEE802.3 standards.

Network device	Contents
CS-series 10Base-5 Ethernet Unit (CS1W-ETN01)	The 10Base-5 Ethernet Unit is a Communications Unit that connects a CS-series PC to an Ethernet network.
24-VDC power supply	This is a external 24-VDC power supply for the purpose of providing power to the transceivers via transceiver cable. Use a power supply with an output current of at least 0.3 A per node. The power is converted within the Unit to the transceiver power supply voltage, and is provided to the transceiver.
Transceiver	The transceiver is a device for interfacing between the coaxial cable and the nodes. Note: The Ethernet Unit can provide a maximum current of 0.4 A to the transceiver, so use a transceiver with a current consumption of not more than 0.4 A. Check with the manufacturer for information regarding transceiver current consumption.
Transceiver cable (AUI cable)	This is the cable for connecting between transceivers and nodes.

Network device	Contents
Coaxial cable	The coaxial cable comprises the main line of the Ethernet System.
Terminator for coaxial cable (terminating resistance)	The Terminators connect to both ends of the coaxial cable.

Note

1. It is also possible to use 10Base-T twisted-pair cable by connecting the Ethernet Unit to a 10Base-T conversion adapter.
2. A 24-VDC power supply is required even if a 10Base-T conversion adapter is used.

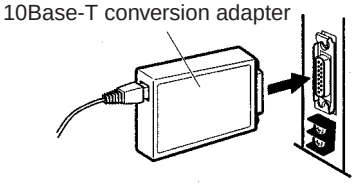

1-3-2 10Base-T Ethernet Unit

The basic configuration of a 10Base-T Ethernet System consists of one hub to which nodes are attached in star form through twisted-pair cable.

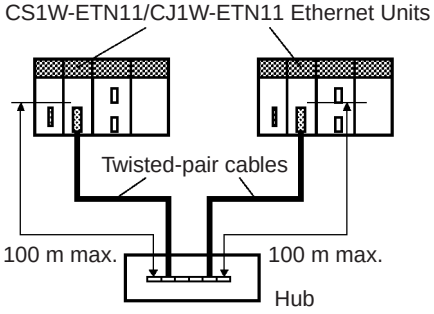

The devices shown in the following table must be obtained to configure a network using a 10Base-T Ethernet Unit, so prepare them in advance.

Network device	Contents
CS-series 10Base-T Ethernet Unit (CS1W-ETN11) or CJ-series 10Base-T Ethernet Unit (CJ1W-ETN11)	The 10Base-T Ethernet Units are Communications Units that connect a CS-series or CJ-series PCs to Ethernet networks.
Twisted-pair cable	A twisted-pair cable that connects the 10Base-T Ethernet Unit to the hub. The twisted-pair cable must have an RJ45 Modular Connector attached to each end. Use a category 3, 4, or 5 UTP (unshielded twisted-pair) cable.
Hub	A relay devices that connect multiple nodes in as star LAN.

Recommended Hub

Manufacturer	Model number	Specifications	Inquires
Allied Telesis	MR820TLX	9-port hub with 10Base-5 back-bone port	Allied Telesis (0120) 86-0442 (in Japan only)

1-4 Related Programming Devices

The Ethernet Unit functions as a node on the Ethernet network. The basic settings for operation are made in the CPU Bus Unit System Setup in the CS/CJ-series CPU Unit. Use the CX-Programmer to make the settings.

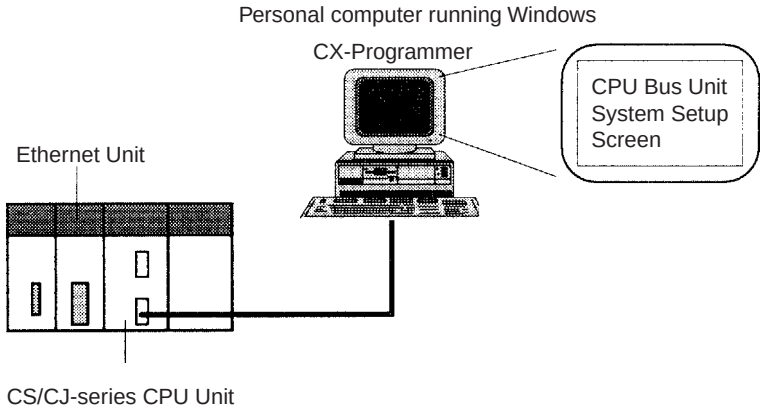

The following items are included in the System Setup.

Screen	Item	Default
Setup Screen	Broadcast setting	All 1 (4.3BSD specifications)
	Address conversion method	Automatic generation
	FINS UDP port number	9600
	Local IP address (CJ Series only)	0.0.0.0 (Set the IP address in the allocated words in the DM Area.)
	Subnetwork mask	0.0.0.0 (Uses value corresponding to IP address class.)
	FTP login name	CONFIDENTIAL
	FTP password	Not set.
	IP address table	Not set.
	IP router table	Not set.
Mail Setup Screen	Mail settings	None set.
	User-created mail data address	Not set.
	Local node address	Not set.
	Destination address	Not set.
	SMTP server address	0.0.0.0 (Not set.)

When using the default values that are already stored in the CS/CJ-series CPU Unit, there is no need to make any settings with the CX-Programmer. Refer to *4-2 CPU Bus Unit System Setup* for details on the above settings.

1-5 Specifications

CS-series Ethernet Units

Item			Specifications	
Model number			CS1W-ETN01	CS1W-ETN11
Type			10Base-5	10Base-T
Applicable PCs			CS-series PCs	
Unit classification			CS-series CPU Bus Unit	
Mounting location			CPU Rack or Expansion Rack	
Number of Units that can be mounted			4 max. (including Expansion Racks)	
Transfer specifi-cations	Media access method		CSMA/CD	
	Modulation		Baseband	
	Transmission paths		Bus	Star
	Baud rate		10 Mbps	
	Transmission media		Coaxial cable	Unshielded twisted-pair (UTP) cable
	Trans-mission distance	Segment length	500 m max.	100 m max.
		Distance between nodes	2,500 m max.	---
	Number of connect-able nodes		100/segment max.	---
	Distance between nodes		Multiples of 2.5 m	---
	Transceiver cable length		50 m max.	---
Current consumption (Unit)			400 mA max. at 5 VDC	400 mA max. at 5 VDC
External power supply			Capacity: 0.3 A min. at 24 VDC (per node) Inrush current: 2.5 A max. (24-VDC startup time of 5 ms) Permissible voltage fluctuation range: 20.4 to 26.4 VDC (24 VDC –15% to +10%) Recommended power supply: OMRON S82J-series	---
Power supply to transceiver			Capacity: 0.4 A at 12 V Voltage fluctuation range: 13.05 to 14.48 VDC Ripple: 2% p-p	---
Vibration resistance			Conforms to JIS 0040. 10 to 57 Hz, 0.075-mm amplitude, 57 to 150 Hz, acceleration: 9.8 m/s^2 in X, Y, and Z directions for 80 minutes each (Time coefficient; 8 minutes × coefficient factor 10 = total time 80 minutes)	
Shock resistance			Conforms to JIS 0041. 147 m/s^2 three times each in X, Y, and Z directions	
Ambient temperature			Operating: 0 to 55°C Storage: –20 to 75°C	
Humidity			10% to 90% (with no condensation)	
Atmosphere			Must be free from corrosive gas.	
Weight			300 g max.	
Dimensions			35 x 130 x 101 mm (W x H x D)	

CJ-series Ethernet Units

Item			Specifications
Model number			CJ1W-ETN11
Type			10Base-T
Applicable PCs			CJ-series PCs
Unit classification			CJ-series CPU Bus Unit
Mounting location			CPU Rack or Expansion Rack
Number of Units that can be mounted			4 max. (including Expansion Racks)
Transfer specifi-cations	Media access method		CSMA/CD
	Modulation		Baseband
	Transmission paths		Star
	Baud rate		10 Mbps
	Transmission media		Unshielded twisted-pair (UTP) cable
	Transmission distance	Segment length	100 m max.
Current consumption (Unit)			380 mA max. at 5 VDC
Vibration resistance			Conforms to JIS 0040. 10 to 57 Hz, 0.075-mm amplitude, 57 to 150 Hz, acceleration: 9.8 m/s^2 in X, Y, and Z directions for 80 minutes each (Time coefficient; 8 minutes × coefficient factor 10 = total time 80 minutes)
Shock resistance			Conforms to JIS 0041. 147 m/s^2 three times each in X, Y, and Z directions
Ambient temperature			Operating: 0 to 55°C Storage: –20 to 75°C
Humidity			10% to 90% (with no condensation)
Atmosphere			Must be free from corrosive gas.
Weight			100 g max.
Dimensions			31 x 90 x 65 mm (W x H x D)

Dimensions

CS1W-ETN01

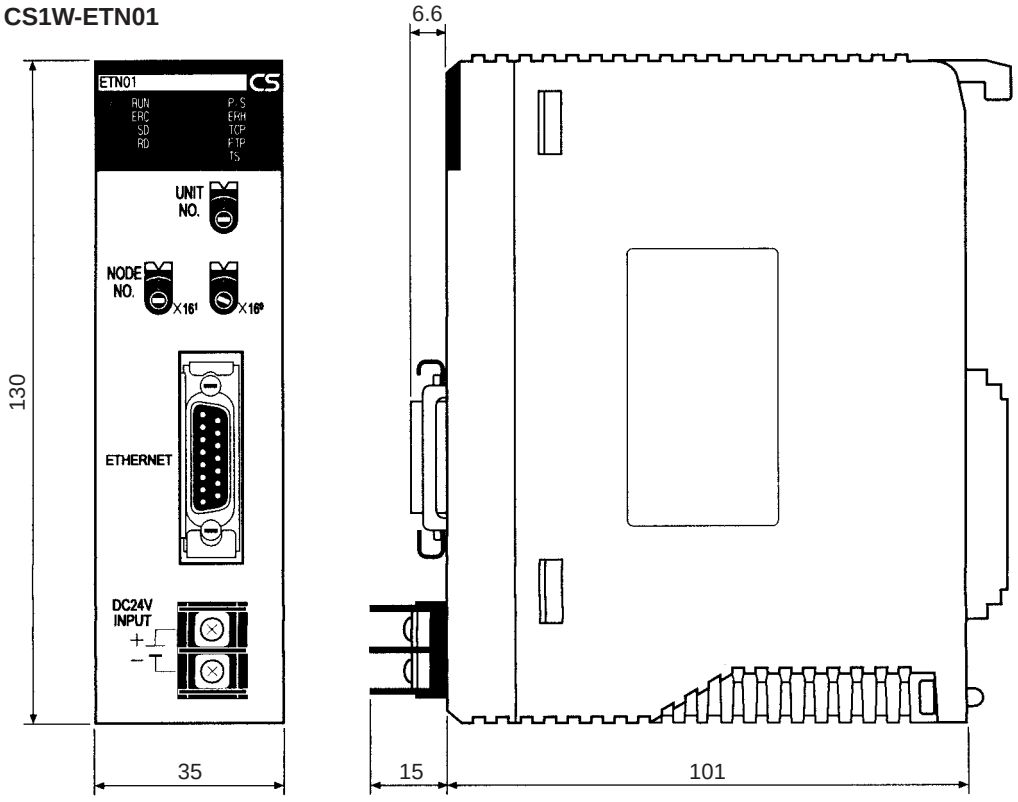

(16.5 including cover) (Unit: mm)

CS1W-ETN11

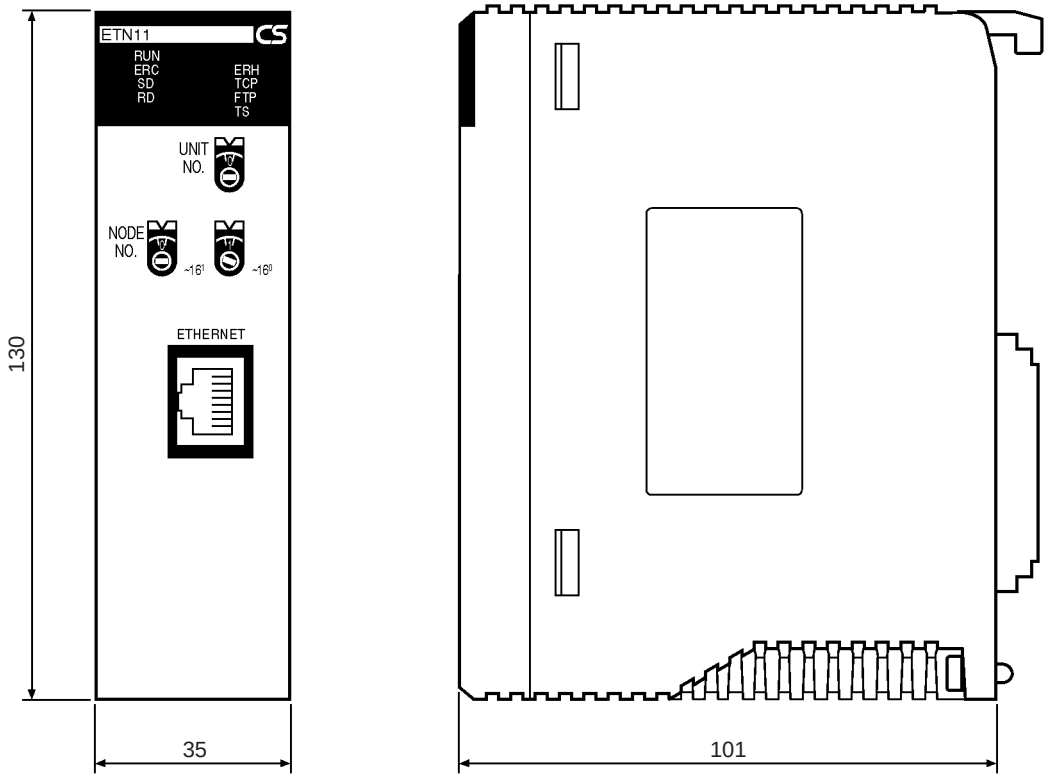

(Unit: mm)

CJ1W-ETN11

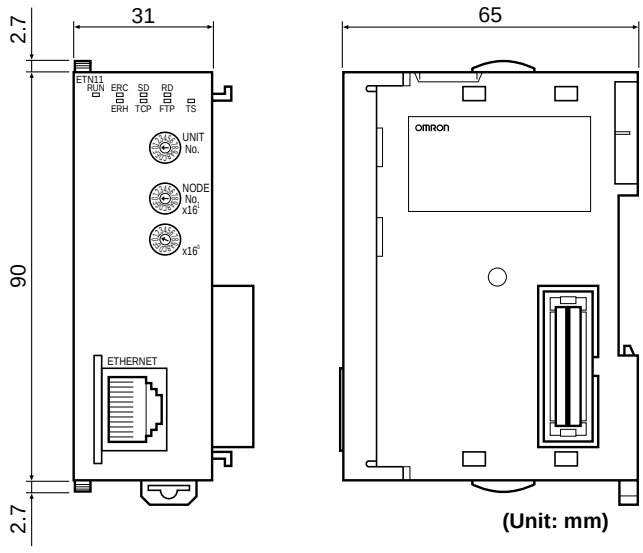

1-6 Software Configuration

The software supported by the Ethernet Unit runs in the layers shown in the following diagram. The components that form the various layers are defined below the diagram.

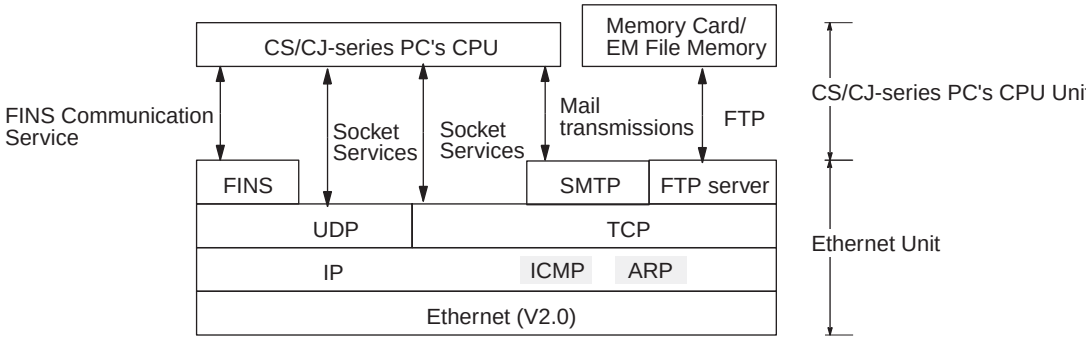

Ethernet The Version-2.0 Ethernet frame format is used for communications.

IP Internet Protocol: Transfers datagrams to target nodes using IP addresses.

ICMP Internet Control Message Protocol: Supports IP communications by signalling errors in data transfers.

ARP Address Resolution Protocol: Determines the Ethernet address (i.e., physical address) by broadcasting based on the target IP address.

UDP User Datagram Protocol: Performs datagram communications. Data resends, priority control, flow control, and other measures to ensure communications reliability are not performed for UDP communications, i.e., there is no way of guaranteeing normal communications without programming special measures to do so into the user's application program.

TCP Transmission Control Protocol: Performs communications after establishing a connection (i.e., a virtual circuit) with the target node to provide a highly reliable communications method.

FINS	Factory Interface Network Service: A protocol that sends messages between PCs on any of various OMRON FA networks. The user must provide measures such as retry processing to ensure that transmitted messages arrive at the destination node.
SMTP	Simple Mail Transfer Protocol: A communications protocol for sending e-mail by TCP/IP.
FTP	File Transfer Protocol: Transfers data files.

1-7 IP Addresses

Ethernet networks use IP addresses for communications. IP addresses (Internet addresses) identify both the Ethernet network and the node (host computer, Ethernet Unit, etc.) on the Ethernet network. IP addresses must be set and controlled so that they are not duplicated.

1-7-1 IP Address Configuration

IP addresses are made up of 32 bits of binary data divided into four 8-bit fields called octets. These four octets provide the network number (net ID) and host number (host ID). The network number identifies the network and the host number identifies the node (or host) on the network.

The network numbers in an IP addresses are divided into three classes, A, B, and C, so that the address system can be selected according to the scale of the network. (Classes D and E are not used.) The configuration of the IP address for each of these classes is shown in the following diagram.

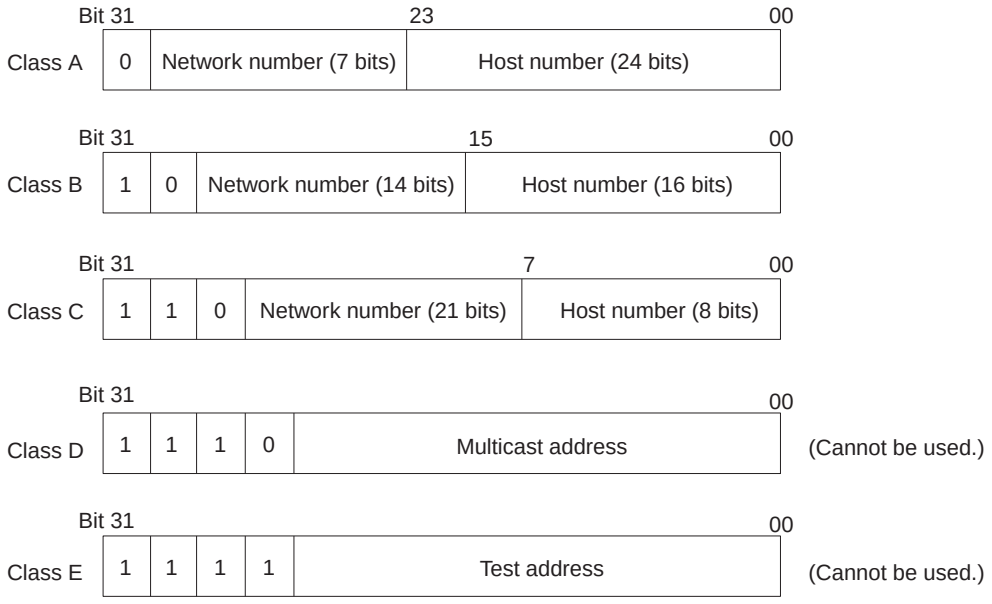

The number of networks in each class and the number of nodes possible on the network differ according to the class.

Class	Number of networks	Number of hosts
Class A	Small	2^{24} – 2 max. (16,777,214 max.)
Class B	Medium	2^{16} – 2 max. (65.534 max.)
Class C	Large	2^{8} – 2 max. (254 max.)

IP addresses are represented by the decimal equivalent of each of the four octets in the 32-bit address, each separated by a period. For example, the binary address `10000010 00111010 00010001 00100000` would be represented as 130.58.17.32.

Note The same network number must be set for every node on the same Ethernet network.

1-7-2 Allocating IP Addresses

IP (Internet Protocol) is a standard communications protocol used throughout the world and is designed to enable communications between any Ethernet

nodes regardless of the networks on which they exist. To achieve this, network numbers are allocated by the Network Solutions, InterNIC Registration Services, to ensure that all Ethernet networks have unique numbers regardless of where they exist. The local system administrator is left the responsibility of allocating unique host numbers locally. You therefore should obtain a network number from the InterNIC Registration Services to ensure uniqueness and allow for future network expansions if required.

1-7-3 IP Address Settings

An IP address must be set for the Ethernet Unit before Ethernet communications can proceed. The IP address is set for each CS-series Ethernet Unit using the rotary switch on the back of the Unit. For more details, refer to *Setting the Local IP Address*. The IP address for each CJ-series Ethernet Unit is set in the DM Area words allocated to CPU Bus Units or the CPU Bus Unit System Setup using a Programming Device. For more details, refer to *4-2 CPU Bus Unit System Setup* or *4-4 DM Area Allocations*.

1-7-4 Subnet Masks

Operation and management of a network may become very difficult if too many nodes are connected on a single network or if a single organization has to manage too many network numbers. It can therefore be convenient to divide a single network up into several subnetworks by using part of the host number as a subnet number. Internally the network can be treated as a number of subnetworks, but from the outside it acts as a single network and uses only a single network number.

To establish subnetworks, the host number in the IP address is divided into a subnet number and a host number by using a setting called the subnet mask. The subnet mask indicates which part of the host number is to be used as the subnet number. The user must first determine the number of bits of the host number to be used as the subnet number and then set the subnet mask accordingly. All bits in the subnet mask that correspond to the bits in the IP address used either as the network number or subnet number are set to “1” and the remaining bits, which will correspond to the bits in the IP address actually used for the host number, are set to “0”.

The following example shows the subnet mask for an 8-bit subnet number used in a class-B IP address. This subnet mask is structured as follows:

This would thus be a class-B IP address masked as a class-C IP address, i.e., externally it would be allocated a class-B IP address but internally it can be addressed using class-C IP addresses.

Subnet mask: `11111111 11111111 11111111 00000000` (FFFFFF00)

It is only necessary to set subnet masks if subnetworks are used. If a subnet mask is not set by the user, a default mask will be set automatically according to the IP address class to indicate that the entire host number will be used as the host number, i.e., no bits will be assigned for use as the subnet number.

All nodes on the network that are going to belong to the same subnetwork must have the same subnet mask.

In this case, the following subnet mask values will be used depending on the IP address class.

Class	Network mask value
Class A	255.0.0.0
Class B	255.255.0.0.0
Class C	255.255.255.0.0.0

1-8 Precautions

Be sure to observe the following precautions when installing and using an Ethernet Unit.

1-8-1 Installation

Observe the following precautions when installing an Ethernet System. (Refer to *Section 3 Installation and Initial Setup* for details.)

1,2,3...

1. Use transceiver cable that meets IEEE802.3 standards to ensure high noise resistance.
2. Use a transceiver with a current consumption of not more than 0.4 A per port.
3. Always turn off the power supply to the PC before connecting or disconnecting the transceiver cable.
4. Be sure not to exceed the current capacity of the Power Supply Unit on the Rack to which the Ethernet Unit is mounted. The current consumption of the CS-series Ethernet Units is 400 mA maximum and the current consumption of the CJ-series Ethernet Unit is 380 mA maximum. This value added to the current consumption of all other Units mounted to the same Rack must not exceed the capacity of the Power Supply Unit.
5. Do not install the transceiver cables or coaxial cables of the Ethernet System near power supply lines. If installation near possible sources of noise is unavoidable, install the cables in grounded metal ducts or take other measure to eliminate noise interference.

1-8-2 Ethernet and IEEE802.3 Standards

The Ethernet Unit was designed based on version-2 Ethernet standards and not on the international IEEE802.3 standards, which were developed based on Version-2.0 Ethernet specifications. Although these two sets of standards are similar, they are not necessarily the same. Particularly, different frame formats are used, making direct communications impossible between systems that do not support the same standards. Standards for equipment used to configure networks are the same, allowing IEEE802.3-standard equipment to be used with the Ethernet Unit. Particularly the transceiver cable for the IEEE802.3 standards provides superior noise resistance and should be used for the Ethernet Unit.

Terminology also differs between Version-2.0 Ethernet and IEEE802.3 standards. These differences are shown in the following table. Version-2.0 Ethernet terminology is used in this manual.

Version-2 Ethernet	IEEE802.3
Transceiver	MAU
Transceiver cable	AUI
Ethernet address	MAC address
Ethernet	10Base-5/10Base-T

SECTION 2
Communications Functions

This section provides an overview of the communications functions that can be used with the Ethernet Unit.

2-1 Communications Functions 16
2-1-1 Ethernet Unit Functions 17
2-1-2 Socket Ports Used By the Ethernet Unit 17
2-1-3 Selecting Communications Services 18
2-2 FINS Communications 18
2-3 Socket Services 19
2-4 FTP Server 21
2-5 Mail 21

2-1 Communications Functions

The following table shows the communications service functions that are available with the Ethernet Unit.

Function		FINS communications	Socket services	FTP server	Mail
Client to server	PC to PC	By executing SEND(090), RECV(098), or CMND(490) 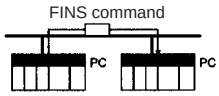	By executing CMND(490) or manipulating dedicated control switches in memory. 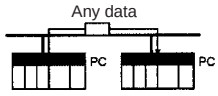	---	---
	PC to host computer	By executing SEND(090), RECV(098), or CMND(490) 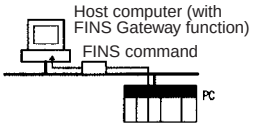	At PC: By executing CMND(490) or manipulating dedicated control switches in memory. 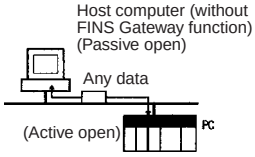	---	E-mail can be set to be sent when specified bits turn ON, when errors occur, or at fixed intervals. 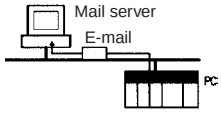
	Host computer to PC	By sending FINS messages from the host computer. 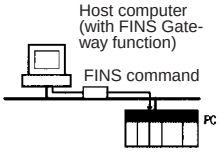	At PC: By executing CMND(490) or manipulating dedicated control switches in memory. 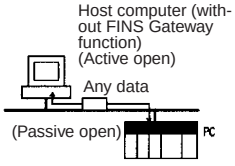	FTP commands executed by host computer 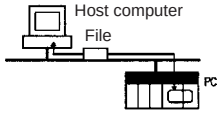	---
Data type		FINS commands (various commands for I/O memory communications in the PC, changing the operating mode, reading and writing files, and so on)	Any data (PC's internal I/O memory)	DOS files in File Memory (Memory Card or EM File Memory)	User-defined messages, error log information, status information
Maximum data size		PC to PC: 1,980 bytes max. PC to host computer: 1,980 bytes max. Host computer to PC: 2,000 bytes max.	1,984 bytes max.	No particular limit.	User-defined messages: 1,024 bytes max.
Features		Enables control of PC and host computer that support FINS commands.	Communications by standard TCP/IP and UDP/IP via Ethernet. No need to set FINS addresses.	Files are read by means of simple commands and applications from host computers with FTP client functions.	Ethernet Unit status is obtained by e-mail. Notification of errors is received by e-mail.
Reference		Section 5 FINS Communications	Section 6 Socket Services	Section 7 FTP Server	Section 8 Mail

2-1-1 Ethernet Unit Functions

Function	Contents
FINS communications	• A SEND(090), RECV(098), or CMND(490) instruction from the PC's ladder program is used to send a FINS command to a remote node, and a response is received. • A FINS command is received from a remote node. If the command is addressed to the local Unit, it is processed internally. If it is addressed to another Unit, a request is made to the CPU Unit and the result is sent back to the remote node as a response. • Following the FINS header information, the Ethernet Unit serves as a gateway for FINS commands and responses between other Communications Units mounted to the same PC.
Socket services	The Ethernet Unit supports up to 16 ports (8 TCP ports and 8 UDP ports) for socket interface with respect to the ladder program. When this function is used, communications can be carried out by either TCP or UDP with various devices on the Ethernet network. This function can be used by either manipulating dedicated control switches in memory or by executing CMND(490). 1) Manipulating dedicated control switches in memory: Socket services can be used by first setting the required parameters in the Socket Service Parameter Area allocated in the DM Area (refer to*4-4 DM Area Allocations*) and then turning ON dedicated control switches in memory. There is no need to monitor the completion timing for instructions or socket services, so the work hours involved in developing ladder programs can be reduced. Only eight socket ports (UDP and TCP combined) can be used with this method. For any ports that exceed that number, use the CMND(490) instruction. 2) Using CMND(490) Socket services can be used by utilizing the CMND(490) instruction to execute FINS commands. Up to 16 socket ports can be used with CMND(490).
FTP server	The FTP server function allows data files to be transferred between a client workstation or personal computer and the PC's file system (Memory Card or EM Area).
Mail	The types of data listed below can be sent as e-mail when a dedicated control switch in memory is turned ON, when an error occurs, or when a preset time interval elapses. Any of the following types of data can be specified for transmission with any of these timing methods. (Refer to Section 8 Mail.) • User-created data (Data at PC: ASCII, 1,024 bytes max.) • Error log information (64 records) • Status information A mail server must be provided separately in order to use the mail function.

2-1-2 Socket Ports Used By the Ethernet Unit

Port number		Application
UDP	9600	Used for FINS. (Can be changed by CPU Bus Unit System Setup.)
TCP	20	Used for FTP server function (for data transfer).
	21	Used for FTP server function (for connection).

2-1-3 Selecting Communications Services

Refer to the following guidelines to select the appropriate communications service to use in a given situation.

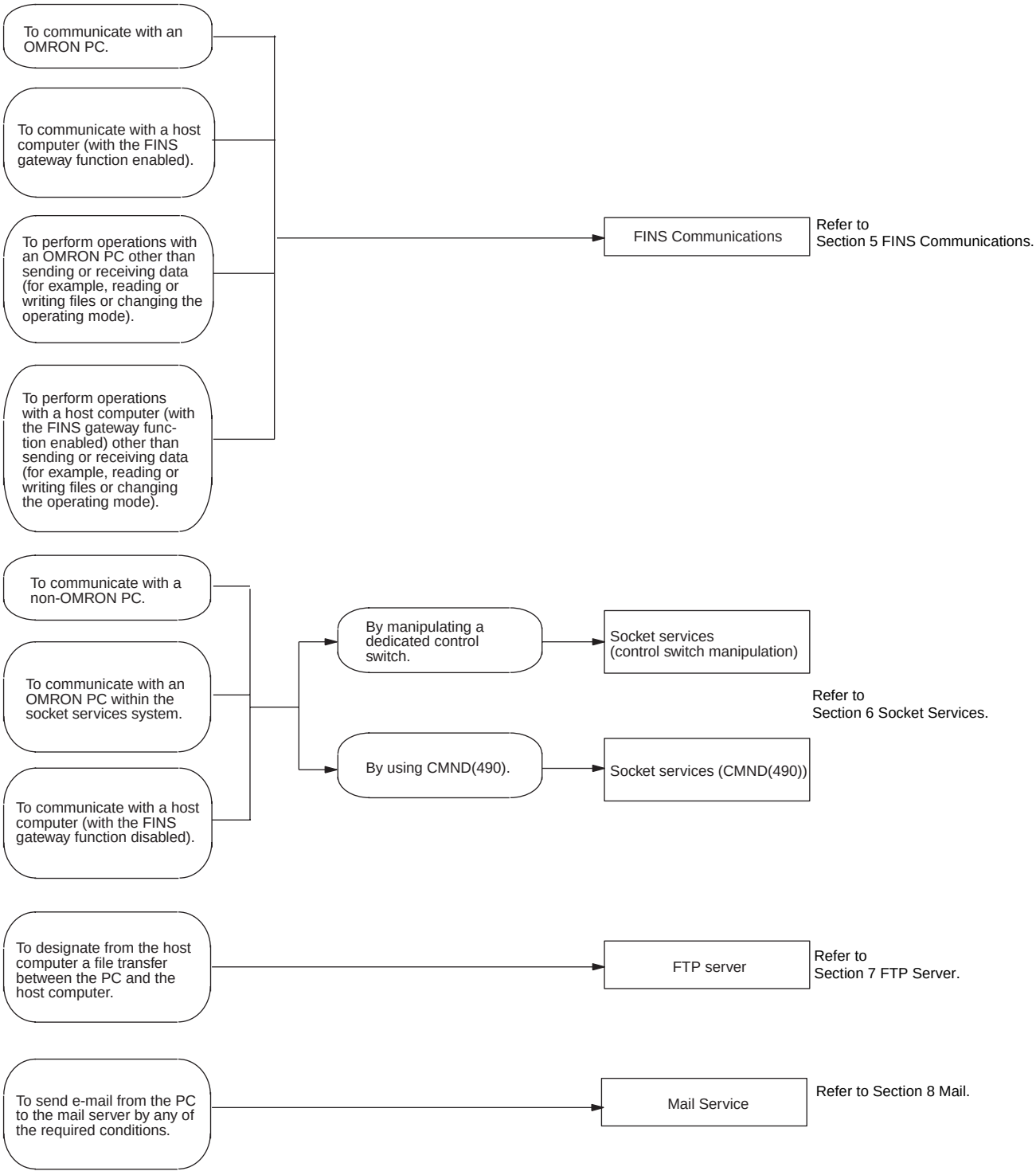

2-2 FINS Communications

FINS commands can be sent to or received from other PCs or computers on the same Ethernet network by executing SEND(090), RECV(098), or

CMND(490) instructions in the ladder-diagram program. This enables control operations such as the reading and writing of I/O memory between PCs, mode changes, and file memory operations. (When a FINS message is sent on an Ethernet network, a UDP/IP header is automatically added to the message.)

The FINS gateway function allows access not only to PCs on the same Ethernet network, but also to PCs on other networks such as SYSMAC LINK or Controller Link.

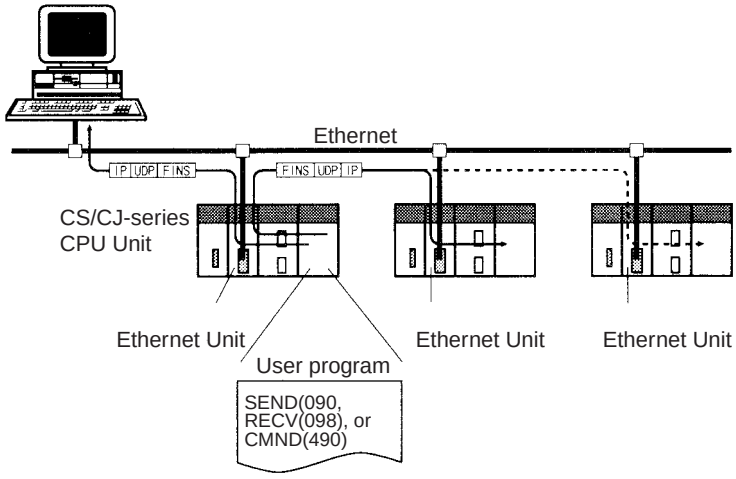

Executing from the host computer FINS commands with UDP/IP headers added enables various control operations such as the reading and writing of I/O memory of PCs on the Ethernet network, mode changes, and file memory operations.

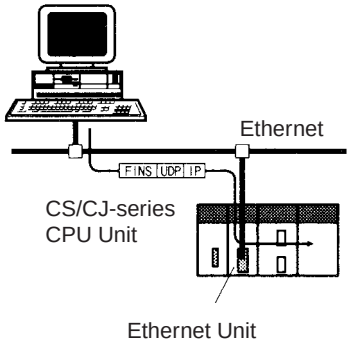

2-3 Socket Services

The socket services allow devices on the Ethernet to send and receive various data using the UDP or TCP protocol. There are two ways to use socket services, as explained below. (For details, refer to *Section 6 Socket Services*.)

By Manipulating Dedicated Control Switches

The first way to use socket services is to set the required parameters in the parameter area allocated in the DM Area, and then to request particular UDP or TCP socket services by turning ON dedicated control switches in memory. The Ethernet Unit turns OFF the same bit when the requested process has been completed. Data that is sent or received is automatically handled according to the I/O memory locations specified in the parameter area.

There is no need to execute the CMND(490) instruction or to monitor the completion timing and actual processing of the instruction, so this helps to simplify ladder programming.

A total of eight ports (UDP and TCP combined) can be used for socket services.

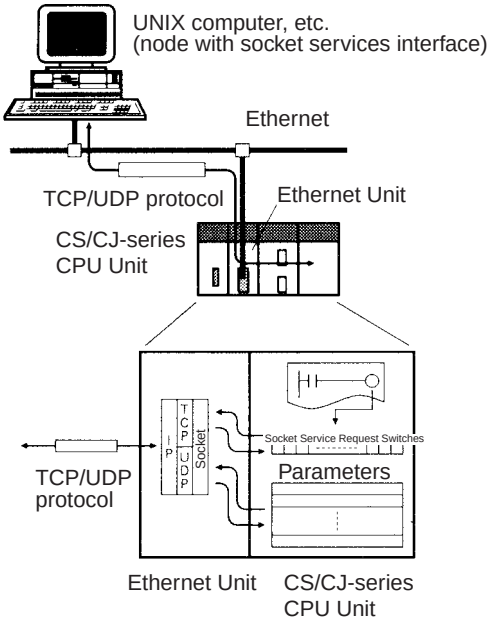

By Executing CMND(490)

The other way to use socket services is to request a UDP or TCP socket service by sending a FINS command to the Ethernet Unit by executing CMND(490) from the CPU Unit. When the Ethernet Unit receives the socket service request, it returns a response to the CPU Unit to confirm that it received the request and then begins the requested processing. When the processing is completed, the results are stored in the Results Storage Area in the CPU Unit.

Eight TCP ports and eight UDP ports can be used.

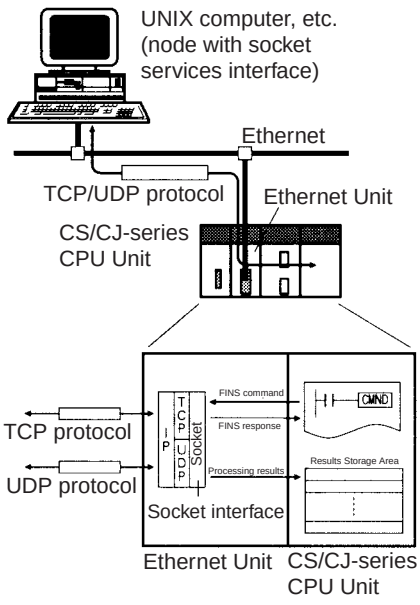

2-4 FTP Server

The Ethernet Unit has a built-in FTP server function, so other computers on the Ethernet can read or write individual files in a Memory Card mounted to the CPU Unit or in EM file memory. This allows files to be exchanged between the host computer and the PC, with the host computer functioning as an FTP client and the PC as an FTP server. For details, refer to *Section 7 FTP Server*.

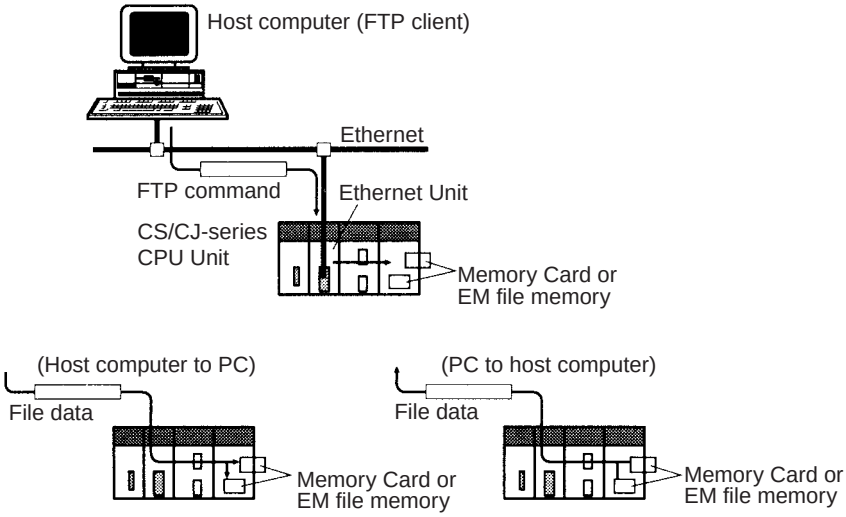

2-5 Mail

Data such as user-created information (1,024 bytes max. in ASCII), Ethernet Unit error log information (64 records max.), and status information can be sent as e-mail to specified addresses.

The e-mail can be sent with any of the following three types of timing. (Simultaneous specification is also possible.)

- When the Mail Send Switch turns ON.
- When an error occurs (when an error log is recorded.)
- At regular intervals.

This enables periodic e-mail and error messages to be sent from the PC to the mail server.

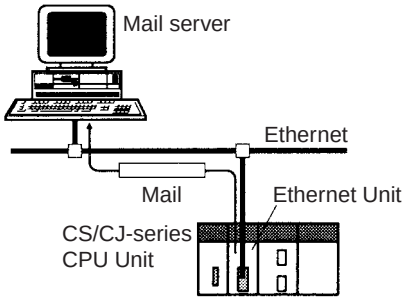

Note

1. A mail server is required in order to use the mail function.
2. Mail server settings require specialized knowledge, so they should always be handled by the network administrator.
3. Be sure you have a clear understanding of the mail system before using this function.

4. Mail delivery is not guaranteed. Depending on factors such as the condition of the network, mail that has been sent may not arrive at its destination.

SECTION 3
Installation and Initial Setup

This section explains how to install the Ethernet Unit and make the initial settings required for operation.

3-1 Before Operation 24
3-1-1 Automatic Address Generation 24
3-1-2 IP Address Table 25
3-2 Overview of Startup Procedure 26
3-3 Unit Components 28
3-3-1 Nomenclature 29
3-3-2 Indicators 32
3-4 Switch Settings 33
3-4-1 CS-series Ethernet Units 33
3-4-2 CJ-series Ethernet Units 35
3-5 Mounting to a PC 37
3-5-1 Mounting to a CS-series PC 37
3-5-2 Mounting to a CJ-series PC 38
3-6 Connecting to the Network 39
3-6-1 Ethernet Network Installation 39
3-6-2 Ethernet Connectors 39
3-6-3 Connecting the Cable 40
3-6-4 Connecting the Power Supply (CS1W-ETN01 Only) 42
3-7 Creating an I/O Table 45
3-7-1 I/O Table Overview 45
3-7-2 Connecting Programming Devices to the PC 45
3-7-3 Procedure for Creating an I/O Table 45
3-8 Creating Routing Tables 46
3-8-1 Routing Table Overview 46
3-8-2 Connecting and Using a Peripheral Device for the PC 48
3-9 System Setup 51
3-9-1 When Settings are Required 51
3-9-2 Using a Programming Device 51
3-9-3 CPU Bus Unit System Setup Defaults 51
3-10 Creating an IP Address Table 52
3-11 Creating an IP Router Table 52
3-12 Checking Communications 53
3-12-1 PING Command and Internode Testing 53
3-12-2 PING Command 53
3-12-3 Internode Test 53
3-12-4 Simple Startup Test Example 54

3-1 Before Operation

In order to connect the Ethernet Unit to an Ethernet network, it is necessary to set the IP address. This section explains the process of address conversion, which is required information for determining the Ethernet Unit's IP address.

Address Conversion (for FINS Communications Only)

When using the FINS communication service, it is necessary to specify the nodes according to the FINS address system. Even in this case, data must be sent and received on the Ethernet network using IP addresses. Therefore, IP addresses are converted from FINS addresses.

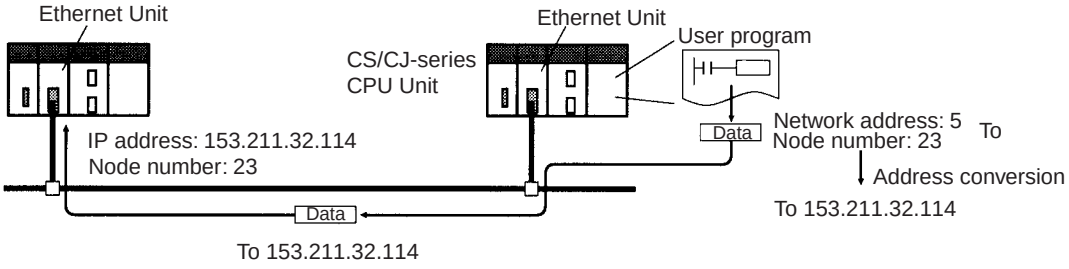

There are three ways to convert addresses. For each method, there are restrictions on the maximum number nodes at the same network level for which communications is possible. The methods and the maximum number of nodes are shown in the following table.

Address conversion method	Maximum number of nodes (including local node)
Automatic generation (the default)	126
IP address table	32
Combined method (using both automatic generation and IP address table)	126

Use the CX-Programmer to select the address conversion method in the System Setup. For an explanation of how to make the setting, refer to *4-2 CPU Bus Unit System Setup*.

3-1-1 Automatic Address Generation

Automatic address generation converts addresses using the FINS node number as the host number of the IP address. The network ID of the local IP address is used for the network ID. The IP address of a remote node is calculated from the local Ethernet Unit's IP address, the subnet mask, and the remote node number (Fins node number), as follows:

Remote IP address =
(local IP address AND subnet mask) OR remote FINS node number

Example

The remote IP address is calculated for the node using the following settings:

Local IP address: 130.25.36.8 (decimal)
Subnet mask: 255.255.255.0 (decimal)
Remote FINS node number: 5

```
        130.25.36. 8     Local IP address
   AND 255.255.255.0     Subnet mask
   ------------------------------------------

          130.25.36.0
   OR                5     Remote FINS node number
   ------------------------------------------
          130.25.36.5     Remote IP address
```

Note The rightmost byte of the host number becomes the FINS node number, and set the rest of the host number to all zeroes.

Example 1: Class B

```
Local IP address:                130.25.0.8
Subnet mask:                     255.255.0.0
Remote FINS node number:         5
                    ↓
                                 Host number
Remote IP address          130.25.0.5
                                   ↑
                                   └─ Becomes 0.
```

Example 2: Class A

```
Local IP address:                130.0.0.8
Subnet mask:                     255.0.0.0
Remote FINS node number:         5
                    ↓
                                 Host number
Remote IP address          130.0.0.5
                                 ↑
                                 └─ Becomes 0.
```

Note With CS-series Ethernet Units, when using either the address conversion method (the default) or the combined method, set the local IP address switches 7 and 8 on the back of the Ethernet Unit and the node number to the same values, and set the other host settings to 0. If the values are wrong, the ERC indicator will flash.

With CJ-series Units, when using either the address conversion method (the default) or the combined method, set the rightmost byte of the local IP address and the node number to the same values, and set the other host settings to 0. If the values are wrong, the ERH indicator will flash.

Characteristics of Automatic Generation Method

The automatic address generation method has the advantage of clarifying the correspondence between the FINS address and the IP address, but it also has the following restrictions.

1,2,3...

1. It cannot be applied outside of the range with the same network ID.
2. The remote host number must be within the range of FINS node numbers (1 to 126).
3. The Ethernet Unit's host number and the node number must be set to the same value.

The automatic address generation method is the default setting, so there is no need to set it with the CX-Programmer if the setting has not been changed.

3-1-2 IP Address Table

The IP address table method converts the FINS node number to an IP address based on a preset correspondence table called an IP address table. The IP address table is prepared in the System Setup, using the CX-Programmer. For details on the System Setup, refer to *4-2 CPU Bus Unit System*

Setup. With different segments, nodes with different network IDs can also be registered.

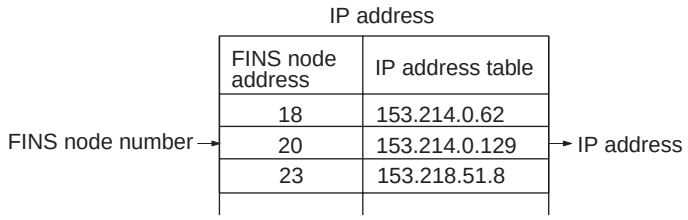

Characteristics of IP Address Table Method

The IP address table method provides a simple correspondence table, so it has the advantage of allowing FINS node numbers and IP address to be freely allocated. It does, however, have the following restrictions.

1,2,3...

1. Not more than 32 pairs of node number and IP addresses can be registered in the IP address table, so that limits the number of nodes, including the local node, to 32.
2. The correspondences must be preset, or the remote FINS node numbers will not be recognized.

Combined Method

The combined method incorporates both the automatic generation method and the IP address table method. It first refers to the IP address table, and if there is an applicable FINS address, it reads the corresponding IP address. If there is no applicable FINS address, it uses the automatic generation method to calculate an IP address.

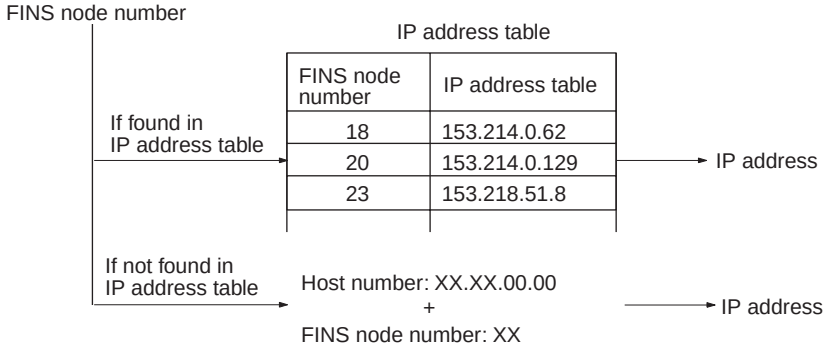

3-2 Overview of Startup Procedure

CS Series

1,2,3...

1. Determine the local IP address and the address conversion method.
   Refer to *3-1 Before Operation*.
2. Set the unit number of the Ethernet Unit as a CPU Bus Unit.
   Refer to *3-4 Switch Settings*.
3. Set the node address.
   Refer to *3-4 Switch Settings*.
4. Set the local IP address.
   Refer to *3-4 Switch Settings*.
5. Mount the Unit to the Backplane.
   Refer to *3-5 Mounting to a PC*.

6. Connect to the network. Connect the transceiver cable and external 24-VDC power supply for 10Base-5 systems and the twisted-pair cable for 10Base-T systems.

   Refer to *3-6 Connecting to the Network*.

7. Turn ON the external 24-VDC power supply (for 10Base-5 systems) and turn ON power to the CPU Unit. When turning ON the power supply, either first turn ON the external power supply (i.e., the power to the transceiver), and then turn ON the power to the CPU Unit afterwards, or else turn them both ON at the same time. If the power is turned ON first to the CPU Unit, a communications error will be generated.

8. Create the I/O tables using a Programming Device, such as CX-Programmer, CX-Net, or a Programming Console. (This step can be omitted if the I/O table has already been created.)

   Refer to *3-7 Creating an I/O Table*.

9. Create the routing tables using the CX-Net. (This step is required only if FINS communications are used, or if CMND(490) is used by a PC with multiple Communications Units mounted to it.)

   Refer to *3-8 Creating Routing Tables*.

10. Make the settings in the System Setup using the CX-Programmer. (Create the IP address table and IP router table.)

    Refer to *3-9 System Setup*, *3-10 Creating an IP Address Table*, and *3-11 Creating an IP Router Table*.

    This step is required only in the following cases:

    - When using a method other than automatic generation for IP address conversion. (Address conversion method, IP address table.)
    - When using the mail notification function.
    - When setting a subnet mask.
    - When setting an FTP login name and password.
    - When Ethernet is configured in multiple segments. (IP router table)
    - When Ethernet 4.28 is used (broadcast settings)
    - When the UDP port number for FINS is changed to something other than the default setting (9600).

11. Check communications. (Use PING command and an internode test.)

CJ Series

1,2,3...

1. Determine the local IP address and the address conversion method.

   Refer to *3-1 Before Operation*.

2. Set the unit number of the Ethernet Unit as a CPU Bus Unit.

   Refer to *3-4 Switch Settings*.

3. Set the node address.

   Refer to *3-4 Switch Settings*.

4. Mount the Unit to the PC.

   Refer to *3-5 Mounting to a PC*.

5. Connect to the network. Connect the twisted-pair cable.

   Refer to *3-6 Connecting to the Network*.

6. Turn ON power to the CPU Unit.

7. Create the I/O tables using a Programming Device, such as CX-Programmer, CX-Net, or a Programming Console.

Refer to *3-7 Creating an I/O Table*.

8. For simple operation where the IP address only (and no other System Setup settings) is set, or for operation using the Programming Console only, set the IP address in the allocated words in the DM Area using the CX-Programmer or Programming Console. (This method is mainly used when setting the IP address in the allocated words in the DM Area using the Programming Console only. When using this method, be sure to set the local IP address value in the CPU Bus Unit System Setup to 00.00.00.00 (default). If a different value is set, the IP address set in the allocated words in the DM Area will be overwritten with this value.)

   Refer to *4-4 DM Area Allocations*.

   For operation with the System Setup set as desired, set the IP address in the CPU Bus Unit System Setup with the CX-Programmer. This method is used when setting the local IP address with the CX-Programmer. Any set value other than 00.00.00.00 will be enabled as the local IP address.)

   Refer to *4-2 CPU Bus Unit System Setup*.

9. Create the routing tables using the CX-Net. (This step is required only if FINS communications are used, or if CMND(490) is used by a PC with multiple Communications Units mounted to it.)

   Refer to *3-8 Creating Routing Tables*.

10. Make the settings in the System Setup using the CX-Programmer. (Create the IP address table and IP router table.)

    Refer to *3-9 System Setup*, *3-10 Creating an IP Address Table*, and *3-11 Creating an IP Router Table*.

    This step is required only in the following cases:

    - When using a method other than automatic generation for IP address conversion. (Address conversion method, IP address table.)
    - When using the mail notification function.
    - When setting a subnet mask.
    - When setting an FTP login name and password.
    - When Ethernet is configured in multiple segments. (IP router table)
    - When Ethernet 4.28 is used (broadcast settings)
    - When the UDP port number for FINS is changed to something other than the default setting (9600).

11. Check communications. (Use PING command and an internode test.)

3-3 Unit Components

This section explains the Ethernet Unit's components, settings, and LED indicators. For details regarding the settings, refer to the individual explanations later in this section.

3-3-1 Nomenclature

CS-series Ethernet Units

CS1W-ETN01 (10Base-5)

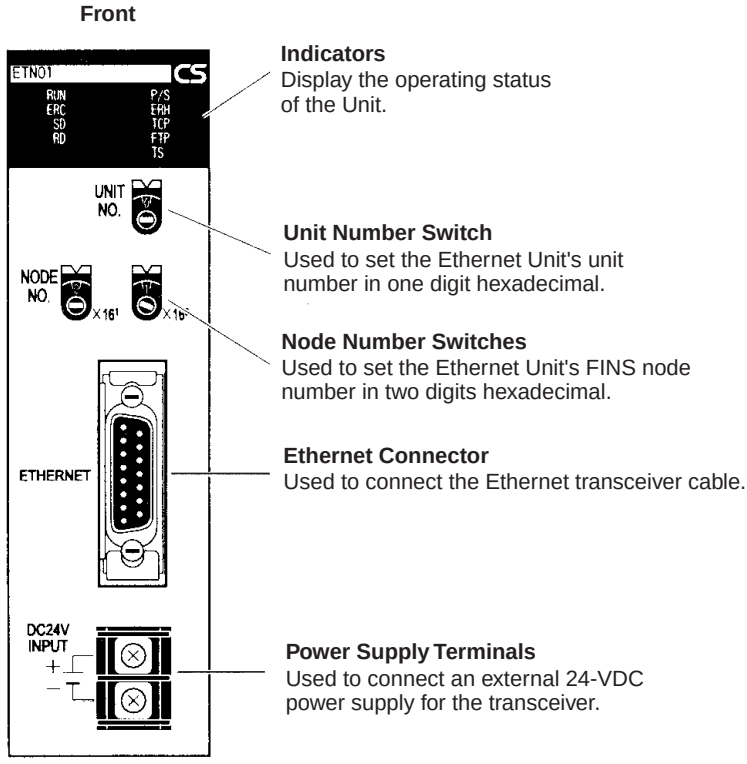

CS1W-ETN11 (10Base-T)

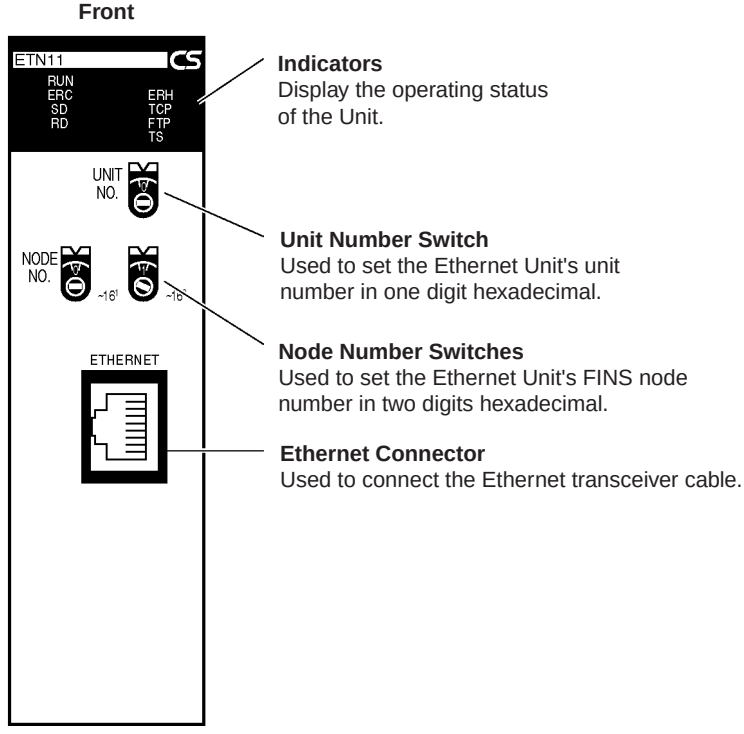

CS1W-ETN01 and CS1W-ETN11

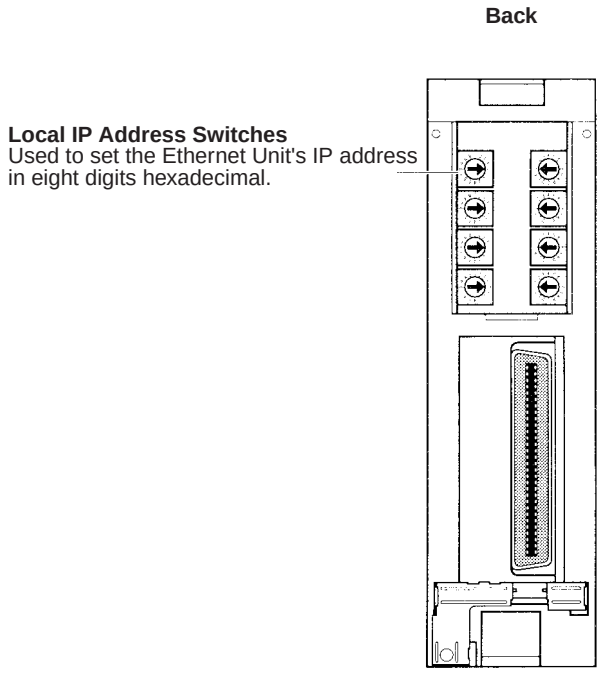

Each communications device connected to the Ethernet network is allocated a unique Ethernet address. For the Ethernet Unit, this Ethernet address is shown on the right side of the Unit as a 12-digit hexadecimal number.

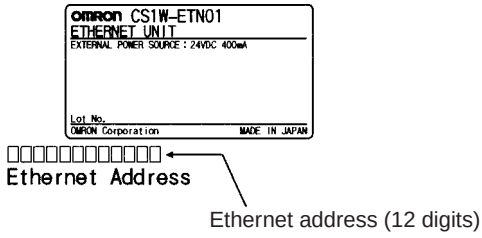

Note The Ethernet address can also be checked using the FINS command, CONTROLLER DATA READ. (Refer to *11-3-2 CONTROLLER DATA READ*.)

CJ-series Ethernet Units

CJ1W-ETN11 (10Base-T)

Front

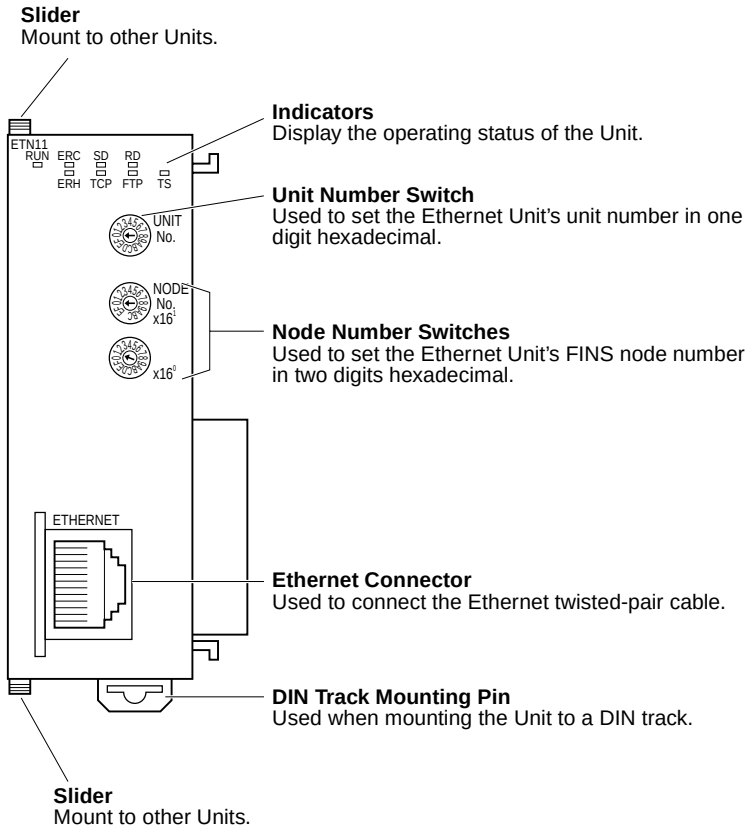

Note An IP address label is provided with the CJ1W-ETN11. Writing the IP address and the subnet mask on this label and then attaching it to the front of the Unit allows the IP address and subnet mask to be confirmed easily.

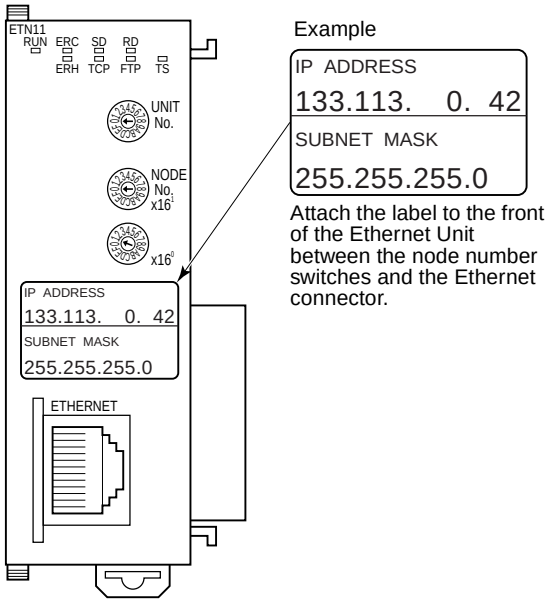

Each communications device connected to the Ethernet network is allocated a unique Ethernet address. For the Ethernet Unit, this Ethernet address is shown on the right side of the Unit as a 12-digit hexadecimal number.

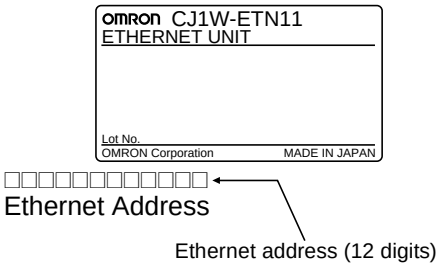

Note The Ethernet address can also be checked using the FINS command, CONTROLLER DATA READ. (Refer to *11-3-2 CONTROLLER DATA READ*.)

3-3-2 Indicators

The status of the indicators show the operating status of the Unit.

CS1W-ETN01 (10Base-5)

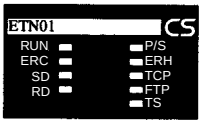

CS1W-ETN11 (10Base-T)

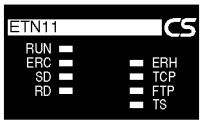

CJ1W-ETN11 (10Base-T)

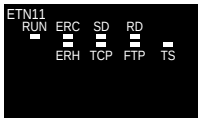

Indicator	Color	Status	Meaning
RUN	Green	Not lit	• Operation stopped. • Hardware error.
		Lit	Normal operation.
P/S (Power Supply) (CS1W-ETN01 only.)	Green	Not lit	Power is not being supplied to the transceiver.
		Lit	Power is being supplied to the transceiver.
ERC (Ethernet Unit Error)	Red	Not lit	Unit normal.
		Lit	• Node number not between 1 and 126. • A hardware (e.g., internal memory) error has occurred.
		Flashing	An illegal IP address has been set. With automatic address generation, the rightmost two digits of the IP address do not match the node number. (Refer to *Setting the Local IP Address*.) This error is generated for the CS Series only.
ERH (PC Error)	Red	Not lit	PC normal.
		Lit	• A PC error has occurred. • An error exists in I/O table, unit number, system data, or routing table settings.
		Flashing	An illegal IP address has been set. With automatic address generation, the rightmost two digits of the IP address do not match the node number. (Refer to Section *4-2-1 Settings*.) This error is generated for the CJ Series only.
SD (Send Data)	Yellow	Not lit	Not sending data. (Ready to send.)
		Lit	Sending data.
RD (Receive Data)	Yellow	Not lit	Not receiving data. (Ready to receive.)
		Lit	Receiving data.
TCP (TCP Socket in Use)	Yellow	Not lit	None of the eight TCP sockets provided for socket services is in use.
		Lit	At least one of the eight TCP sockets provided for socket services is in use.
FTP (File Server Service)	Yellow	Not lit	FTP server on stand-by.
		Lit	FTP server operating.

Indicator	Color	Status	Meaning
TS (Internode Testing)	Yellow	Not lit	Not running internode test.
		Lit	Running internode test.

3-4 Switch Settings

This section explains how to set the various switches on the Ethernet Unit.

3-4-1 CS-series Ethernet Units

Setting the Unit Number

The unit number is used to identify individual CPU Bus Units when more than one CPU Bus Unit is mounted to the same PC. Use a small screwdriver to make the setting, taking care not to damage the rotary switch. The unit number is factory-set to 0.

Setting range:
0 to F

Note

1. Turn OFF the power supply before setting the unit number.
2. If the unit number is being set for the first time or changed, then an I/O table must be created for the PC.

Unit Number and CPU Bus Unit Allocations

With CS-series PCs, words are automatically allocated in the CIO Area and the DM Area. The Ethernet Unit uses these words for receiving control data from the CPU Unit and for notifying the CPU Unit of Ethernet Unit and communications status. The word addresses in the allocated areas for the CPU Bus Unit are important in creating the user program for using the Ethernet Unit, so be careful to take them into account when setting the unit number.

The following table shows the areas allocated for the CPU Bus Unit by unit number. This table only shows the correspondences between unit numbers and the areas allocated for the CPU Bus Unit. For more details, refer to *Section 4 System Setup and Memory Allocations*.

CIO Area Allocations

Unit No. (decimal)	Allocated words	Unit No. (decimal)	Allocated words
0 (0)	CIO 1500 to CIO 1524	8 (8)	CIO 1700 to CIO 1724
1 (1)	CIO 1525 to CIO 1549	9 (9)	CIO 1725 to CIO 1749
2 (2)	CIO 1550 to CIO 1574	A (10)	CIO 1750 to CIO 1774
3 (3)	CIO 1575 to CIO 1599	B (11)	CIO 1775 to CIO 1799
4 (4)	CIO 1600 to CIO 1624	C (12)	CIO 1800 to CIO 1824
5 (5)	CIO 1625 to CIO 1649	D (13)	CIO 1825 to CIO 1849
6 (6)	CIO 1650 to CIO 1674	E (14)	CIO 1850 to CIO 1874
7 (7)	CIO 1675 to CIO 1699	F (15)	CIO 1875 to CIO 1899

DM Area Allocations

Unit No. (decimal)	Allocated words	Unit No. (decimal)	Allocated words
0 (0)	D30000 to D30099	8 (8)	D30800 to D30899
1 (1)	D30100 to D30199	9 (9)	D30900 to D30999
2 (2)	D30200 to D30299	A (10)	D31000 to D31099
3 (3)	D30300 to D30399	B (11)	D31100 to D31199
4 (4)	D30400 to D30499	C (12)	D31200 to D31299
5 (5)	D30500 to D30599	D (13)	D31300 to D31399
6 (6)	D30600 to D30699	E (14)	D31400 to D31499
7 (7)	D30700 to D30799	F (15)	D31500 to D31599

Setting the Node Number

With the FINS communications service, when there are multiple Ethernet Units connected to the Ethernet network, the Ethernet Units are identified by node numbers. Use the node number switches to set the node number between 01 and 7E hexadecimal (1 to 126 decimal). Do not set a number that has already been set for another node on the same network.

Setting range:
01 to 7E (1 to 126 decimal)

The left switch sets the sixteens digit (most significant digit) and the right switch sets the ones digit (least significant digit). The node number is factory-set to 01.

When using the automatic generation method for address conversion, set the node number to the same value as that of the local IP address switches. If this is not possible, then either the IP address table method or the combined method must be used for address conversion. For details, refer to *4-2 CPU Bus Unit System Setup*.

If the FINS communications service is not being used over the Ethernet network, then there is no problem if the node number duplicates that of another Ethernet Unit. The node number must still be set from 01 to 7E, however, or the ERC indicator will light.

Note Turn OFF the power supply before setting the node number.

Setting the Local IP Address

The nodes on an Ethernet network are identified by IP addresses. Each IP address is set with 32 bits of binary data. These 32 bits are divided into four 8-bit fields called octets, and each octet is expressed as four decimal numbers. At CS-series Ethernet Units, four bits are expressed as a hexadecimal digit, and the eight hexadecimal rotary switches (the local IP address switches) on the back of the Unit are used to set the local IP address. Set the eight switches in hexadecimal as shown below, combining SW1 and SW2, SW3 and SW4, SW5 and SW6, and SW7 and SW8. Each switch can be set from 0 to F.

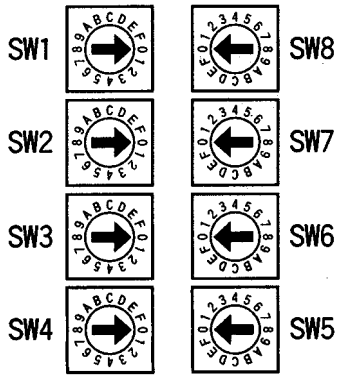

Setting range:
0 to F

Local IP Address Switch No. 1 2. 3 4. 5 6. 7 8.

The switches are all factory-set to 0 (00.00.00.00). The Ethernet Unit cannot be used with this setting; a proper IP address must be set. The following settings cannot be made for the IP address, or the ERC indicator will flash.

All bits in the network number field set to 0 or 1.

All bits in the host number field set to 0 or 1.

All bits in the subnet number field set to 1.

The beginning of the IP address set to 127 (7F Hex)
Example: 127.35.21.16

Note

1. When using the automatic generation method for address conversion, set switches 7 and 8 to the same values as the node number setting, and set the rest of the host number to zeroes. For details regarding the host number, refer to *1-7 IP Addresses*. The value for the host number field in the IP address must match the value for the node number or the ERC indicator will flash.
2. If a subnet mask is to be set, use the CX-Programmer to set it in the CPU Bus Unit System Setup. For details, refer to *4-2 CPU Bus Unit System Setup*.

3-4-2 CJ-series Ethernet Units

Note With CJ-series Ethernet Units, the local IP address is set with the Programming Device for the PC, such as CX-Programmer. For details, refer to *4-2 CPU Bus Unit System Setup* and *4-4 DM Area Allocations*.

Setting the Unit Number

The unit number is used to identify individual CPU Bus Units when more than one CPU Bus Unit is mounted to the same PC. Use a small screwdriver to make the setting, taking care not to damage the rotary switch. The unit number is factory-set to 0.

Setting range:
0 to F

Note

1. Turn OFF the power supply before setting the unit number.
2. If the unit number is being set for the first time or changed, then an I/O table must be created for the PC.

Unit Number and CPU Bus Unit Allocations

With CJ-series PCs, words are automatically allocated in the CIO Area and the DM Area. The Ethernet Unit uses these words for receiving control data from the CPU Unit and for notifying the CPU Unit of Ethernet Unit and communications status. The word addresses in the allocated areas for the CPU Bus Unit are important in creating the user program for using the Ethernet Unit, so be careful to take them into account when setting the unit number.

The following table shows the areas allocated for the CPU Bus Unit by unit number. This table only shows the correspondences between unit numbers and the areas allocated for the CPU Bus Unit. For more details, refer to *Section 4 System Setup and Memory Allocations*.

CIO Area Allocations

Unit No. (decimal)	Allocated words	Unit No. (decimal)	Allocated words
0 (0)	CIO 1500 to CIO 1524	8 (8)	CIO 1700 to CIO 1724
1 (1)	CIO 1525 to CIO 1549	9 (9)	CIO 1725 to CIO 1749
2 (2)	CIO 1550 to CIO 1574	A (10)	CIO 1750 to CIO 1774
3 (3)	CIO 1575 to CIO 1599	B (11)	CIO 1775 to CIO 1799
4 (4)	CIO 1600 to CIO 1624	C (12)	CIO 1800 to CIO 1824
5 (5)	CIO 1625 to CIO 1649	D (13)	CIO 1825 to CIO 1849
6 (6)	CIO 1650 to CIO 1674	E (14)	CIO 1850 to CIO 1874
7 (7)	CIO 1675 to CIO 1699	F (15)	CIO 1875 to CIO 1899

DM Area Allocations

Unit No. (decimal)	Allocated words	Unit No. (decimal)	Allocated words
0 (0)	D30000 to D30099	8 (8)	D30800 to D30899
1 (1)	D30100 to D30199	9 (9)	D30900 to D30999
2 (2)	D30200 to D30299	A (10)	D31000 to D31099
3 (3)	D30300 to D30399	B (11)	D31100 to D31199
4 (4)	D30400 to D30499	C (12)	D31200 to D31299
5 (5)	D30500 to D30599	D (13)	D31300 to D31399
6 (6)	D30600 to D30699	E (14)	D31400 to D31499
7 (7)	D30700 to D30799	F (15)	D31500 to D31599

Setting the Node Number

With the FINS communications service, when there are multiple Ethernet Units connected to the Ethernet network, the Ethernet Units are identified by node numbers. Use the node number switches to set the node number between 01 and 7E hexadecimal (1 to 126 decimal). Do not set a number that has already been set for another node on the same network.

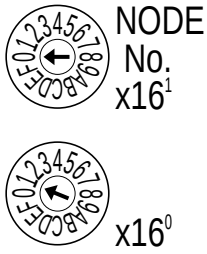

Setting range:

01 to 7E (1 to 126 decimal)

The top switch sets the sixteens digit (most significant digit) and the bottom switch sets the ones digit (least significant digit). The node number is factory-set to 01.

When using the automatic generation method for address conversion, set the node number to the same value as the rightmost byte of the local IP address. If this is not possible, then either the IP address table method or the combined method must be used for address conversion. For details, refer to *4-2 CPU Bus Unit System Setup*.

If the FINS communications service is not being used over the Ethernet network, then there is no problem if the node number duplicates that of another Ethernet Unit. The node number must still be set from 01 to 7E, however, or the ERC indicator will light.

Note Turn OFF the power supply before setting the node number.

3-5 Mounting to a PC

3-5-1 Mounting to a CS-series PC

Ethernet Units can be mounted to any slots in either a CS-series CPU Rack or a CS-series Expansion CPU Rack, but the number of slots to which they can be mounted depends on the Backplane. Up to four Ethernet Units can be mounted to a single PC. If it is mounted in combination with other CPU Bus Units (e.g., Controller Link Units), the maximum total number of CPU Bus Units that can be mounted is 16.

Note Tighten PC Backplane mounting screws to a torque of 1.2 N·m, and the Unit's screws to a torque of 0.8 N·m.

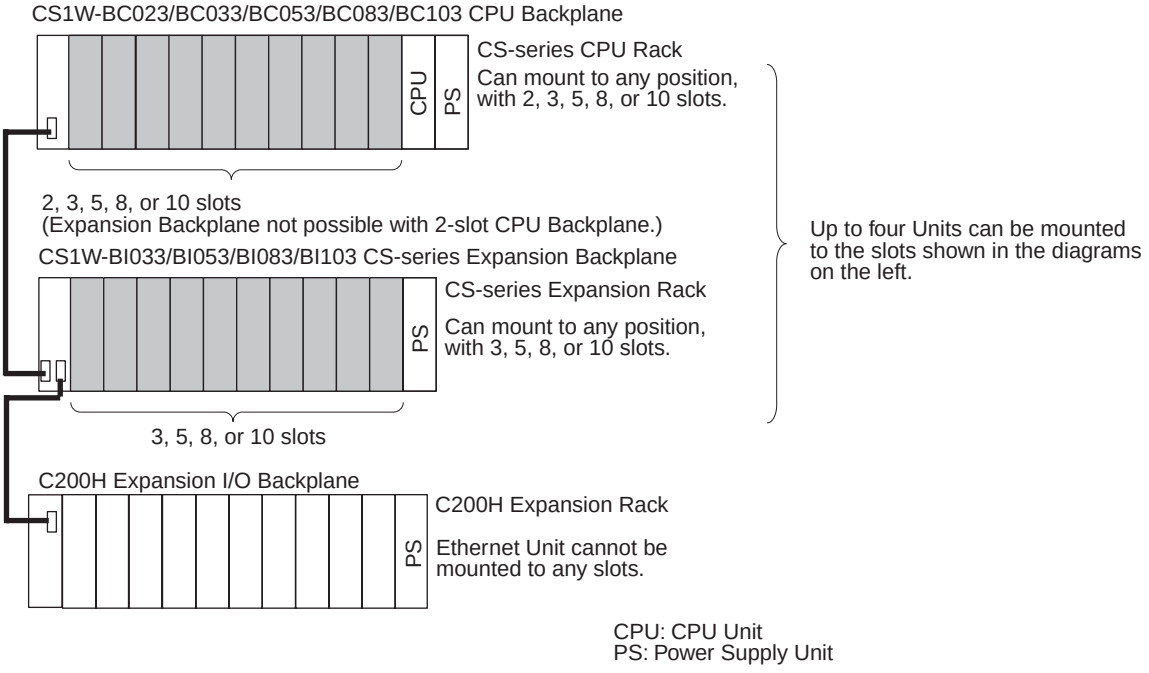

Note The CS1W-ETN01/ETN11 Ethernet Unit's maximum current consumption is 400 mA. (The power provided to the transceiver is not included because it comes from a 24-VDC power supply connected to the Unit's power supply terminals.) Make sure that the total current consumption of all the Units connected to the same CPU Backplane or Expansion Backplane does not exceed the output capacity of the Power Supply Unit.

3-5-2 Mounting to a CJ-series PC

Ethernet Units can be connected to either a CJ-series CPU Rack or a CJ-series Expansion CPU Rack. Connect the Ethernet Unit in any of the positions shown below using the sliders on the top and bottom of the Unit. Up to four Ethernet Units can be mounted to a single PC. If it is mounted in combination with other CPU Bus Units (e.g., Controller Link Units), the maximum total number of CPU Bus Units that can be mounted is 16.

Note Tighten PC Backplane mounting screws to a torque of 1.2 N·m, and the Unit's screws to a torque of 0.8 N·m.

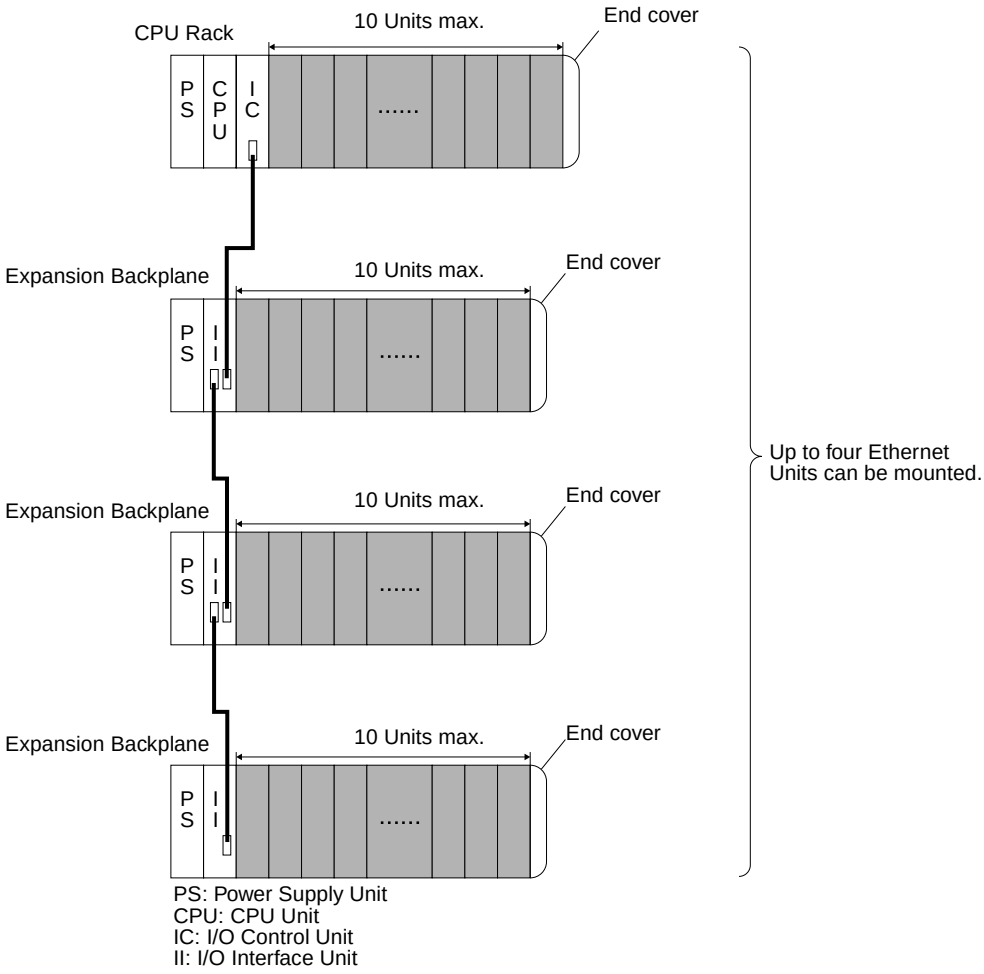

Note The CS1W-ETN01/ETN11 Ethernet Unit's maximum current consumption is 380 mA. Make sure that the total current consumption of all the Units connected to the same CPU Backplane or Expansion Backplane does not exceed the output capacity of the Power Supply Unit.

3-6 Connecting to the Network

3-6-1 Ethernet Network Installation

When installing an Ethernet network, be sure to take all appropriate safety measures and to follow the applicable standards (ISO 8802-3). You must obtain a copy of these specifications and be sure you understand them before attempting to install an Ethernet System. Unless you are already experienced in installing communications systems, we strongly recommend that you employ a professional to install your system.

For information regarding basic installation precautions, equipment, recommended products, and installation examples, refer to *Appendix A Network Installation*.

3-6-2 Ethernet Connectors

CS1W-ETN01

The following standards and specifications apply to the connectors for the Ethernet transceiver cable.

- Electrical specifications: Conforming to IEEE802.3 standards.
- Lock structure: IEEE802.3 standards for slide latches

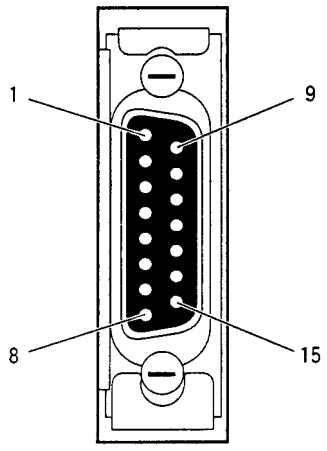

Connector pin	Signal name	Abbr.	Signal direction
1	Signal ground	GND	---
2	Collision detection signal +	COL+	Input
3	Send data +	TX+	Output
4	Signal ground	GND	---
5	Receive data +	RX+	Input
6	Power ground (common with signal ground)	VC	---
7	Not used	---	---
8	Signal ground	GND	---
9	Collision detection signal –	COL–	Input
10	Send data –	TX–	Output
11	Signal ground	GND	---
12	Receive data –	RX–	Input
13	Transceiver +12 VDC power supply	+12 V	Output
14	Signal ground	GND	---
15	Not used	---	---
Connector hood	Frame ground	FG	---

CS1W-ETN11 and CJ1W-ETN11

The following standards and specifications apply to the connectors for the Ethernet twisted-pair cable.

- Electrical specifications: Conforming to IEEE802.3 standards.
- Connector structure: RJ45 8-pin Modular Connector (conforming to ISO 8877)

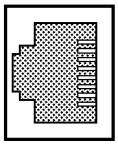

Connector pin	Signal name	Abbr.	Signal direction
1	Transmission data +	TD+	Output
2	Transmission data –	TD–	Output
3	Reception data +	RD+	Input
4	Not used.	---	---
5	Not used.	---	---
6	Reception data –	RD–	Input
7	Not used.	---	---
8	Not used.	---	---

3-6-3 Connecting the Cable

Transceiver Cable (for CS1W-ETN01)

⚠ **Caution** Turn OFF the PC's power supply before connecting or disconnecting transceiver cable.

1,2,3...

1. Prepare a coaxial cable.
2. Connect the transceivers to the coaxial cable.
   - Mark the coaxial cable at intervals of 2.5 meters. Then connect the transceivers at those marks.
   - The transceiver connection method depends on the type of transceiver, so refer to the transceiver operation manual.
3. Prepare the transceiver cable, and then connect it to the transceivers.

For more details regarding these steps, refer to *Appendix A Network Installation*. The cable preparation should be performed by an experienced professional.

4. Connect the transceiver cable to the Ethernet Unit connector. The Ethernet Unit connector has a slide latch conforming to IEEE802.3 specifications that serves as a lock mechanism. To connect the transceiver cable, operate the slide latch as described below.
   a) First push the slide latch upwards.
   b) Insert the cable connector into the Ethernet Unit's connector with the two locking posts at the end of the cable connector aligned with the holes in the slide latch.
   c) Then push the slide latch down to lock the cable connector in place.

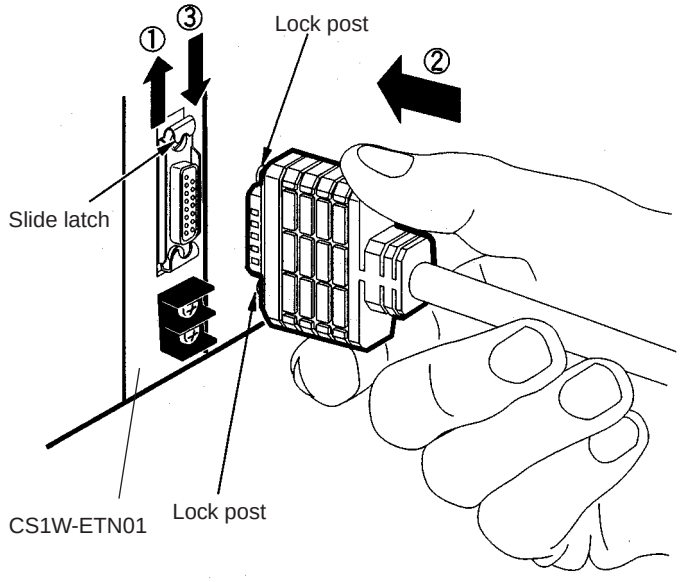

Twisted-pair Cable (for CS1W-ETN11 and CJ1W-ETN11)

⚠ **Caution** Turn OFF the PC's power supply before connecting or disconnecting twisted-pair cable.

⚠ **Caution** Allow enough space for the bending radius of the twisted-pair cable as shown in below.

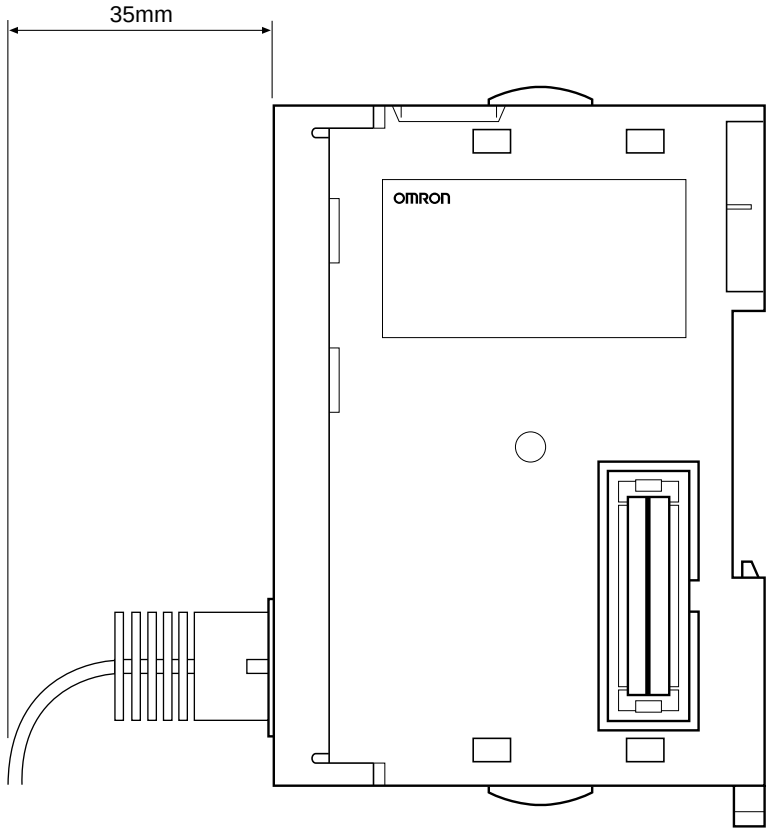

1,2,3... 1. Lay the twisted-pair cable.

2. Connect the cable to the hub. Be sure to press in the cable until it locks into place.

   Examples of the above two steps are provided in *Appendix A*. Request cable installation from a qualified professional.

3. Connect the cable to the connector on the Ethernet Unit. Be sure to press in the cable until it locks into place.

Example: CS1W-ETN11

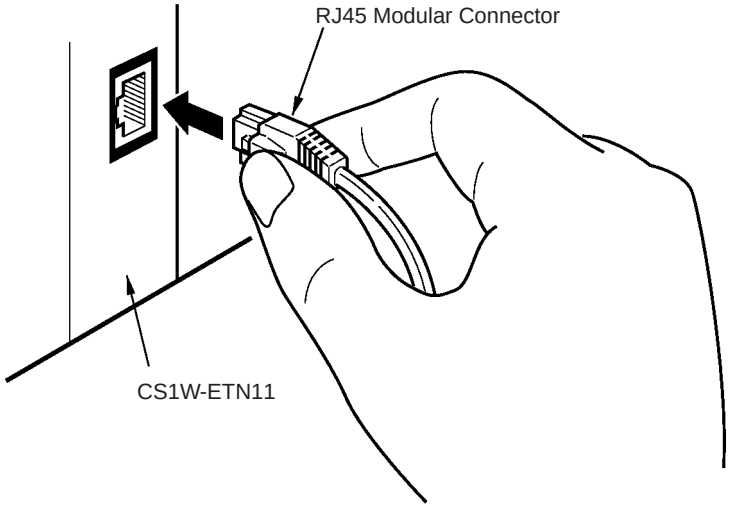

3-6-4 Connecting the Power Supply (CS1W-ETN01 Only)

Connect a 24-VDC power supply to the power supply terminals. The Ethernet Unit converts this 24-VDC power supply to the power supply voltage for the transceivers and provides it through the transceiver cable.

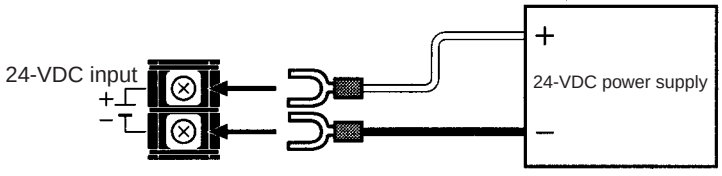

Crimp terminals must be used for the power supply cable. The applicable M3 crimp terminals and recommended products are shown below.

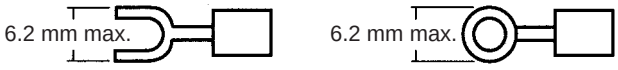

Maker	Model	Specifications	Applicable power line range (stranded wire)
J.S.T.MFG.CO., LTD	V1.25-N3A	Fork terminal with vinyl insulation	0.25 to 1.65 mm^2 (AWG: #22 to #16)
	V1.25-MS3	Ring terminal with vinyl insulation	
MOLEX JAPAN CO.,LTD	VSY1.25-3.5L	Fork terminal with vinyl insulation	0.3 to 1.65 mm^2 (AWG: #22 to #16)
	RAV1.25-M3	Ring terminal with vinyl insulation	

⚠ **Caution** Be sure to turn OFF the power supply to the PC before connecting to the power supply terminal block.

Note

1. Do not connect a power supply with a voltage other than 24 VDC.
2. To reduce the effects of noise, wire the power supply cable separately from power lines and high-voltage lines.
3. Crimp terminals must be used for wiring. Do not just twist loose wire strands.
4. Use the recommended crimp terminals.
5. Use the proper tools and procedure for installing the crimp terminals. Consult with the terminal manufacturers for instructions. If the proper tools and procedure are not used, it may cause the cable to become disconnected.
6. When installing the crimp terminals, use a length of cable that will not need to be bent too much when combined with the terminals. Also, cover the terminal and the end of the cable with insulating tape and heat-absorbing tubing.
7. Be careful not to mistake the plus and minus terminals when connecting the power supply.
8. Tighten the terminal block screws to a torque of 0.5 N·m. If the screws are too loose, it may result in short-circuiting, malfunctioning, or fire damage.
9. Check the wiring carefully before turning ON the power.
10. Use a dedicated power supply, and do not use the same power supply for the I/O power supply, motor power lines, or control power lines.
11. Position the power supply as close as possible to the Unit, and separate the power supply cable by at least 20 cm from other power lines in order to avoid adverse effects from high-voltage lines.
12. Noise influence may be reduced by installing a noise filter near the primary side of the power supply.
13. Carefully twist the power supply cable that is to be connected to the Unit.
14. Do not excessively bend or stretch the cable.
15. Do not place anything on top of cables or cords.
16. If errors occur due to noise related to an external power supply, it may be possible to solve the problem by not grounding the communications power supply. Normally the switching power supply is connected to the case and capacitor, as shown in the following diagram, so along with isolating the FG terminal it is necessary to insulate the power supply itself from the control panel.

General Switching Power Supply Configuration

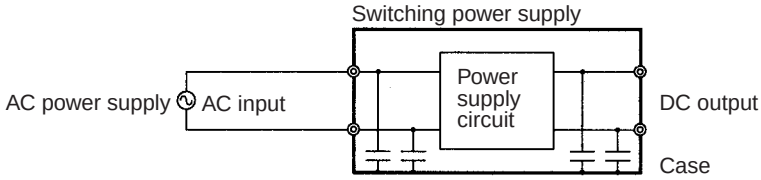

Standard Switching Power Supply Circuit

Communications Power Supply Isolation Method

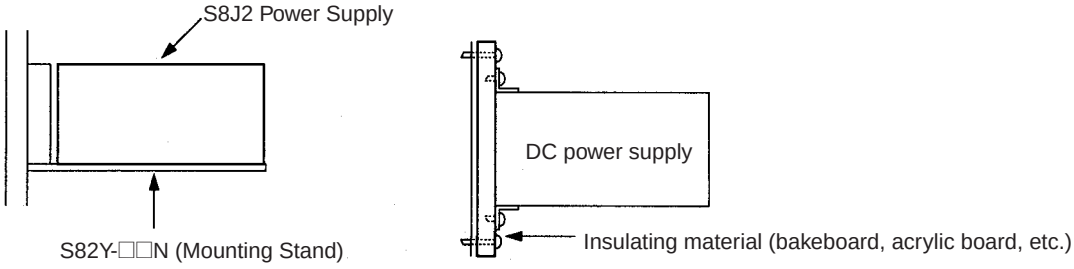

(1) When S82J is used. (2) When another power supply is used.

17. If communications are adversely affected by noise from the Unit's power supply terminals, the problem may be solved by implementing the measures shown below.
    a) Add to the communications retry processing at the application. In particular, noise resistance capacity can be improved by increasing the number of retries for applications using UDP.
    b) Insert a noise filter right next to the Unit's power supply terminals.

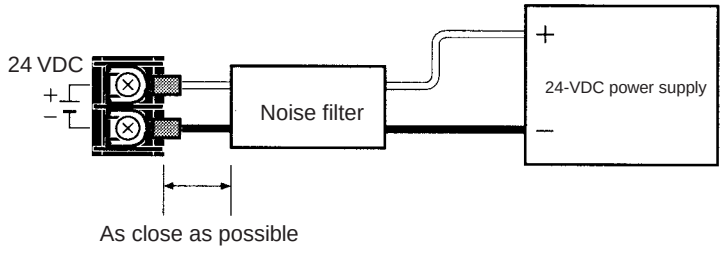

Recommended filter: MAS-1206-33 by Nemic-Rambda K.K.

Specifications	Rated voltage: 250 V (AC, DC) Rated current: 6 A
Dimensions	105.5 x 52.5 x 40 mm (W x H x D) (Not including connector.)

Power Supply Specifications

The following table shows the power supply specifications. Make sure that these specifications are met.

Item	Specifications
Power supply voltage	24 VDC
Allowable power supply voltage fluctuation	20.4 VDC to 26.4 VDC (24 VDC –15% + 10 %)
Current consumption	300 mA max. at 24 VDC (per node)
Inrush current	2.5 A max. (24 VDC when rise time is 5 ms)

OMRON's S82J Series is recommended for the power supply.

Note

1. Use a power supply that meets these specifications.
2. If the power supply is separate from a node, make sure that these specifications are met at the node's terminal block.
3. Turn ON the Unit's power supply either before or at the same time as the CPU Unit's power supply. If the CPU's power is turned ON first, a communications error may be generated.
4. Use a power supply with double or reinforced insulation.
5. Confirm that the Power Status Bit is ON before starting communications. (Refer to *Power Status (Bit 15)* in *4-3 CIO Area Allocations*.)
6. In the IEEE802.3 standards, the transceiver power supply specifications require a voltage of 11.28 V (12 V – 6%) to 15.75 V (15 V + 5%) at the transceiver inputs. The voltage output by the Ethernet Unit takes into account a voltage drop at the transceiver cable.

3-7 Creating an I/O Table

After the hardware settings and connections have been completed, turn ON the power supply to the PC and create an I/O table.

3-7-1 I/O Table Overview

An I/O table is used to identify Units connected to the PC and to allocate I/O to them. If any change is made to the Unit configuration of a CS/CJ-series PC, an I/O table must be created to register the Units to the CPU Unit.

3-7-2 Connecting Programming Devices to the PC

To create the I/O table, connect a Programming Device (such as a Programming Console or CX-Programmer) to the PC.

Applicable Programming Devices

The following Programming Devices can be used with CS/CJ-series PCs.

Programming Console

Model number	Key Sheet (required)	Recommended cable (required)
C200H-PRO27-E	CS1W-KS001-E	CS1W-CN224 (cable length: 2.0 m) CS1W-CN624 (cable length: 6.0 m)
CQM1-PRO01-E		CS1W-CN114 (cable length: 0.1 m)

CX-Programmer and CX-Net

Model number: WS02-CXP□□-EV2

The operations are explained here using a Programming Console. For details regarding the CX-Programmer and the CX-Net, refer to the *CX-Programmer User's Manual*.

CX-Net is software that comes with CX-Programmer and is automatically installed when CX-Programmer is installed.

Connecting Programming Devices

To connect a Programming Console, attach a CS/CJ-series Key Sheet and then connect the Console to the CPU Unit's peripheral port. (It cannot be connected to the RS-232C port.)

3-7-3 Procedure for Creating an I/O Table

The procedure for creating an I/O table is shown here, taking as an example an I/O table that is generated automatically for a PC connected online. In this example, a Programming Console is used for creating the I/O table. For an

explanation of how to create an I/O table using a CX-Programmer, refer to the *CX-Programmer User's Manual*.

Use the following procedure to create the I/O table.

Note With the CJ Series, it is necessary to create an I/O table only when I/O allocation is performed by the user. With the CS Series, it is always necessary to create an I/O table.

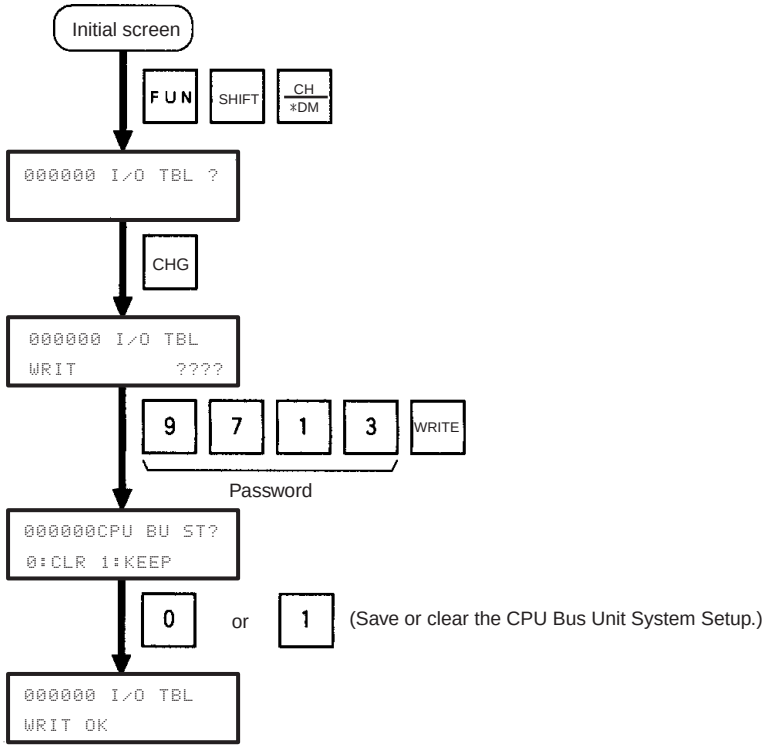

3-8 Creating Routing Tables

When the FINS communications service is used, routing tables must be created in advance. Routing tables are required in the following circumstances.

- When the FINS communications service is used on an Ethernet network (including when communications are only carried out between FA networks via an Ethernet network).
- When there are multiple Communications Units mounted to the PC, and socket services are requested by executing the CMND(490) instruction.

If neither of these circumstances apply, then a routing table is not required. In that case, proceed to *3-9 System Setup*.

The routing table is required not only for nodes communicating via the FINS communications service but for all relay nodes on the network.

3-8-1 Routing Table Overview

The routing tables describe the transmission path for FINS messages when the FINS communications are used. It consists of two tables: A local network table and a relay network table.

Local Network Table

The local network table is a table describing the correspondences among unit numbers of the Communications Units and Boards mounted to each node (PC or FA Computer).

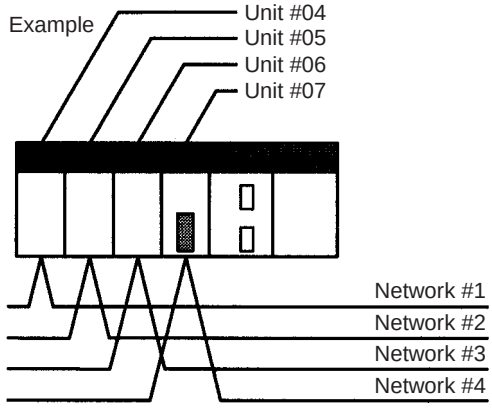

Local Network Table

Local network address	Unit number
1	04
2	05
3	06
4	07

Note

1. The unit number is set (from 0 to F: 1 to 15) by the rotary switch on the front of the Ethernet Unit.
2. The network address is the number of the network (from 1 to 127) to which the Communications Unit or Board is connected. It is set when the local network table is created.

Relay Network Table

A relay table is a table that shows the nodes to which data should be sent first in order to send data to a network that is not connected to the local node. It shows the correspondence between the address of the final destination network, and the network address and node number of the first relay point of the path to reach there. When internetwork communications are carried out, the end network can be reached by following the relay points.

The following example shows a routing table for sending data from PC #1 (the local node: network address 1, node number 1) to PC #4 (the destination node: network address 3, node number 2).

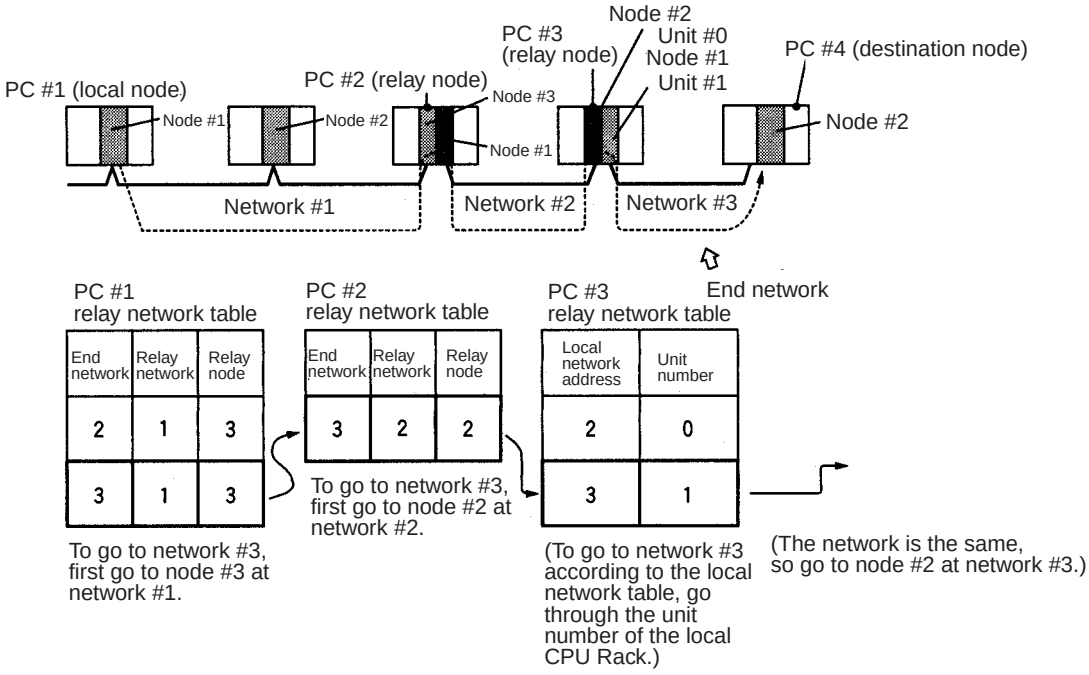

3-8-2 Connecting and Using a Peripheral Device for the PC

Routing tables must be created by a CX-Net connected to the PC. (They cannot be created using a Programming Console.) For details on how to connect and use a CX-Net, refer to the *CX-Programmer User's Manual*. (CX-Net is automatically installed when CX-Programmer is installed.)

Note

1. To transfer routing tables for multiple nodes to a PC in one batch, connect the CX-Net to a PC with only one Communications Unit mounted. Routing tables cannot be transferred to other nodes from a PC with multiple Communications Units mounted.
2. Routing tables can only be transferred as a batch to multiple nodes within the same network as the PC to which the CX-Net is connected.

Routing Table Setting Examples

Example 1: Local Network Table for a PC With Multiple Units Mounted

This example shows the local network table settings for a PC to which multiple CPU Bus Units are mounted.

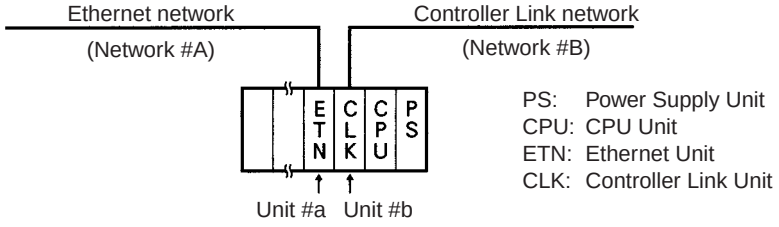

Local Network Table

No.	Local network	CPU Bus Unit
1	A	a
2	B	b

Example 2: Three Interconnected Networks

This example shows the relay network table settings for three different interconnected networks.

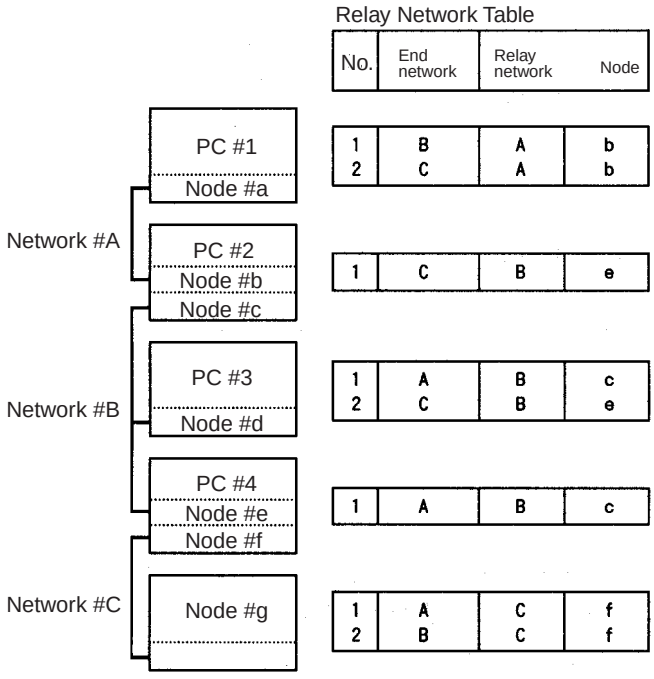

In the table for PC #3, for example, if network #A is taken as the end network, then network #B becomes the relay network and node #c becomes the relay node. If network #C is taken as the end network, then network #B still becomes the relay network and node #e becomes the relay node.

Example 3: All Nodes

This example uses the following configuration to show the routing tables for all nodes.

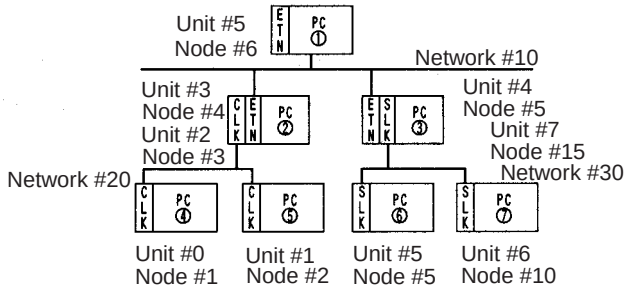

PC #1 Routing Table

(Local network table)

No.	Local network	CPU Bus Unit No.
1	010	05
2		
3		

(Relay network table)

No.	End network	Relay network	Relay node
1	020	010	004
2	030	010	005
3			

PC #2 Routing Table

(Local network table)

No.	Local network	CPU Bus Unit No.
1	010	03
2	020	02
3		

(Relay network table)

No.	End network	Relay network	Relay node
1	030	010	005
2			
3			

PC #3 Routing Table

(Local network table)

No.	Local network	CPU Bus Unit No.
1	010	04
2	030	07
3		

(Relay network table)

No.	End network	Relay network	Relay node
1	020	010	004
2			
3			

PC #4 Routing Table

(Local network table)

No.	Local network	CPU Bus Unit No.
1	020	00
2		
3		

(Relay network table)

No.	End network	Relay network	Relay node
1	010	020	003
2	030	020	003
3			

PC #5 Routing Table

(Local network table)

No.	Local network	CPU Bus Unit No.
1	020	01
2		
3		

(Relay network table)

No.	End network	Relay network	Relay node
1	010	020	003
2	030	020	003
3			

PC #6 Routing Table

(Local network table)

No.	Local network	CPU Bus Unit No.
1	030	05
2		
3		

(Relay network table)

No.	End network	Relay network	Relay node
1	010	030	015
2	020	030	015
3			

PC #7 Routing Table

(Local network table)

No.	Local network	CPU Bus Unit No.
1	030	06
2		
3		

(Relay network table)

No.	End network	Relay network	Relay node
1	010	030	015
2	020	030	015
3			

3-9 System Setup

The settings for the Ethernet Unit's basic and special functions are made in the CPU Bus Unit System Setup. These settings, and the situations in which the settings must be made, are shown in the following table. For details on how to make the settings, refer to *4-2 CPU Bus Unit System Setup*.

3-9-1 When Settings are Required

Settings	When settings are required
Broadcast setting	When Ethernet is used with UNIX 4.2BSD specifications.
Address conversion method	• When the FINS communications service is used on an Ethernet network. • When it is necessary to set a value outside of the range of 1 to 126 for the least significant byte of the local IP address.
UDP port number for FINS	When it is necessary to set a value other than the default (9600) for the FINS UDP port number.
Local IP address (CJ Series only)	When setting the local IP address with the CPU Bus Unit System Setup (i.e., when not setting the local IP address with the allocated words in the DM Area).
Subnet mask	When it is necessary to set a subnet mask.
FTP login name FTP password	When setting the login name and password at the FTP server.
IP address table	• When the FINS communications service is used on an Ethernet network. • When it is necessary to set a value outside of the range of 1 to 126 for the least significant byte of the local IP address.
IP router table	• When the Ethernet network is configured with multiple segments.
Mail function	When the mail function is used.

Refer to *4-2 CPU Bus Unit System Setup for details*.

3-9-2 Using a Programming Device

The settings for the CPU Bus Unit System Setup must be made using the Unit settings on a CX-Programmer connected to the PC. The settings cannot be made using a Programming Console. For details on how to connect and use a CX-Programmer, refer to the *CX-Programmer User's Manual*.

3-9-3 CPU Bus Unit System Setup Defaults

The following table shows the items in the CPU Bus Unit System Setup, and their default settings.

Item	Default
Broadcast settings	All 1 (4.3BSD specifications)
Address conversion method	Automatic address generation
UDP port number for FINS	9600
Local IP address (CJ Series only)	0.0.0.0 (The local IP address is set with allocated words in the DM Area.)
Subnet mask	0.0.0.0 (A value corresponding to the IP address is used.)
FTP login name	CONFIDENTIAL
FTP password	Not set.
IP address table	Not set.
IP router table	Not set.
Mail settings	None set.
User-created mail data address	Not set.
Local mail address	Not set.

Item	Default
Destination mail address	Not set.
SMTP server address	0.0.0.0 (Not set.)

For information on IP address table settings, refer to *3-10 Creating an IP Address Table*. For information on IP router table settings, refer to *3-11 Creating an IP Router Table*. For information on IP mail transmission settings, refer to *Section 8 Mail*.

3-10 Creating an IP Address Table

An IP address table is a table of correspondences between node numbers and IP addresses, and it is used for finding IP addresses from FINS node numbers. It is necessary to register an IP address table when using the IP address table method as the method for address conversion. (For details regarding preliminary procedures, refer to *3-1 Before Operation*.)

An IP address table does not necessarily need to be registered in order to use the combined method for address conversion. If none is registered, however, the automatic address generation method will always be used.

If the automatic address generation method is to be used exclusively, then there is no need to register an IP address table. In that case, proceed to *3-11 Creating an IP Router Table*.

Connecting and Using a Programming Device for the PC

The IP address table must be created using the Unit settings on a CX-Programmer connected to the PC. It cannot be created using a Programming Console. For details on how to connect and use a CX-Programmer, refer to the *CX-Programmer User's Manual*.

Note An IP address table can also be registered using the FINS command IP ADDRESS TABLE WRITE. For details, refer to *IP ADDRESS TABLE WRITE* on page 237.

3-11 Creating an IP Router Table

An IP router table is a table of correspondences between IP router IP addresses and the network numbers of segments relayed by the IP router. If the Ethernet network is configured of multiple segments, an IP router table must be registered for communications between the segments. (For details on segments and connecting nodes, refer to *1-2-2 Node Connections*.)

If the Ethernet network has the minimal configuration of just one segment, there is no need to create an IP router table. In that case, proceed to *3-12 Checking Communications*.

Note

1. An IP router table needs to be created only when the IP address table method or the combined method is used for address conversion.
2. With CJ-series Ethernet Units, it is possible to register one default IP router (the IP router selected when the applicable network number is not registered).

Connecting and Using a Programming Device for the PC

The IP router table must be created using the Unit settings on a CX-Programmer connected to the PC. It cannot be created using a Programming Console. For details on how to connect and use a CX-Programmer, refer to the *CX-Programmer User's Manual*.

3-12 Checking Communications

The Ethernet Unit supports the PING command, which is also widely supported by host computers. It also supports a function for internode testing in the FINS communications service by simply manipulating bits with a Programming Device.

After the settings and connections have been completed, use either the PING command or the internode test function as required to check communications with the remote nodes.

3-12-1 PING Command and Internode Testing

The following table outlines the points of difference between the PING command and internode testing.

Item	PING command	Internode testing
Main application	Testing communications as an Ethernet node.	Checking settings such as FINS addresses for using the FINS communications service.
Test objects	Ethernet Units and Ethernet devices that support PING.	OMRON Units and Boards that support FINS communications service internode testing.
Network classification	Within Ethernet networks (including between segments).	Up to three levels of Ethernet networks, and FA networks.
Address system used	IP addresses	FINS address system (network and node numbers) Note: Requires routing tables.
Transmission from Ethernet Unit	PING command is issued to Ethernet Unit by CMND(490) instruction in user program.	Set required parameters in DM from Programming Device, and manipulate start switch bit.
Reception at Ethernet Unit	When PING command is received, it is automatically returned.	When internode test message is received, it is automatically returned.

3-12-2 PING Command

The PING command checks communications with another node by sending an echo back request packet and receiving a response packet. Use the PING command as required to check communications. Using the PING command between nodes that support the PING command makes it possible to check whether internode communications are normal.

For details on using the PING command, refer to *9-2 PING Command*.

3-12-3 Internode Test

The internode test is a function for checking a network by sending data to and from specified nodes and checking the responses. Use the internode test as required to check the FINS communications service settings. Using it between Communications Units and Boards that support it makes it possible to check whether the FINS communications service settings are correct.

For details on using the internode test, refer to *9-3 Internode Test*.

Note

1. The internode test can be easily carried out by manipulating dedicated control switches for the Ethernet Unit. For details, refer to *9-3 Internode Test*.
2. Internode testing of the FINS communications service can also be carried out by means of the FINS commands INTERNODE ECHO TEST and BROADCAST TEST RESULTS READ. For details, refer to *11-3-4 INTERNODE ECHO TEST* and *11-3-5 BROADCAST TEST RESULTS READ*.

3-12-4 Simple Startup Test Example

When performing FINS communications using UDP with the Ethernet Unit, it is recommended that a startup test (a connections verification test) is performed under simple conditions, according to the procedure detailed below.

Users starting up the system for the first time should perform the following settings and operations and ensure correct operation. The actual application conditions and setting methods for the CS1W-ETN01 are indicated below as an example.

Application Conditions

- A 1-to-1 connection is made between the host computer (workstation or personal computer) and the PC (Programmable Controller). There are no communications beyond the network, i.e., there are no inter-network communications.
- The MEMORY AREA READ command (a FINS command addressed to the PC with command code 0101 hex) is sent to the PC from the host computer via Ethernet.
- IP address conversion is set to automatic generation (default setting).

Setting Method

1,2,3...

1. Set the IP Address
   Set the IP address of the Ethernet Unit using the 8 hexadecimal rotary switches on the back of the Unit so that it does not coincide with the IP address of the host computer. For example, if the IP address of the host computer (workstation or personal computer) is 133.113.0.40 (85.71.00.28 Hex), set 133.113.00.42 (85.71.00.2A Hex) as the IP address of the Ethernet Unit. When using the automatic generation method for address conversion, set SW7 and SW8 to the same values as the node number setting. Set the rest of the host number setting (SW5 and SW6) to zeroes.

   Note If the IP address of the host computer is 133.113.102.40, set the IP address of the Unit to 133.113.102.42. In this case, set the subnet mask to the class-C subnet mask 255.255.255.0.

2. Set the Unit Number and the Node Address
   - Set the unit number to 00.
   - Set the node address to 2A.
3. Set the Routing Tables
   The routing tables describe the transmission path for FINS messages when the FINS communications are used. Connect CX-NET and make the following settings.

Local network table

Local network address	Unit number
1	0

Set to the same value as the unit number set with the rotary switch on the front of the Unit.

When the above settings have been completed, reset the power supply.

4. Check Communications

   In order to check that connection is established with Ethernet Unit at an IP protocol level (i.e., whether communications are possible), send the following PING command from the host computer to the Ethernet Unit.

   PING 133.113.0.42
   (For details, refer *9-2-2 Host Computer*.)

   If a normal response is not returned for the PING command, it is possible that there is a problem with a connection cable or an IP address. If this is the case, sending any FINS command will end in an error. Check the cables and other setup conditions and eliminate any possible factors preventing normal communications. Confirm that a normal response is received to the PING command.

5. Send a FINS Command

   Send the following kind of PC-addressed FINS command to the PC (MEMORY AREA READ, command code 0101) from the host computer's UDP port 9600 (same port number as the Ethernet Unit's default FINS UDP port). If a normal response is received, this means that the startup test is completed.

   For details of FINS frames (ICF to SID below), refer to *5-4-2 FINS Frames*. For details of FINS commands, refer to the *CS/CJ-series Programmable Controllers Communications Commands Reference Manual* (W342).

Command

80	00	02	01	2A	00	01	28	00	01	01	01
ICF	RSV	GCT	DNA	DA1	DA2	SNA	SA1	SA2	SID	Command code (READ)	

82	00	64	00	00	96

I/O memory area (DM Area)

Beginning address to read (Word 100, word units)

Number of items to read (150)

Normal Response

C0	00	02	01	28	00	01	2A	00	01	01	01
ICF	RSV	GCT	DNA	DA1	DA2	SNA	SA1	SA2	SID	Command code (READ)	

00	00					

Completion code (Normal completion)

Data read from D100 - - - - - - - -

Data read from D249

SECTION 4
System Setup and Memory Allocations

This section explains the System Setup and the words allocated in the CIO Area and the DM Area for Ethernet Units.

4-1 Allocated Words 58
4-2 CPU Bus Unit System Setup. 59
4-2-1 Settings 60
4-2-2 Mail Settings. 64
4-3 CIO Area Allocations 67
4-4 DM Area Allocations 73

4-1 Allocated Words

The Ethernet Unit is allocated words in the following three areas for reading settings and status.

- System Setup for CPU Bus Units
  Stores initial setup for the Ethernet node.
- Allocated Words in the CIO Area
  Stores software switches and status information for functions.
- Allocated Words in the DM Area
  Stores software switch and status information for functions.

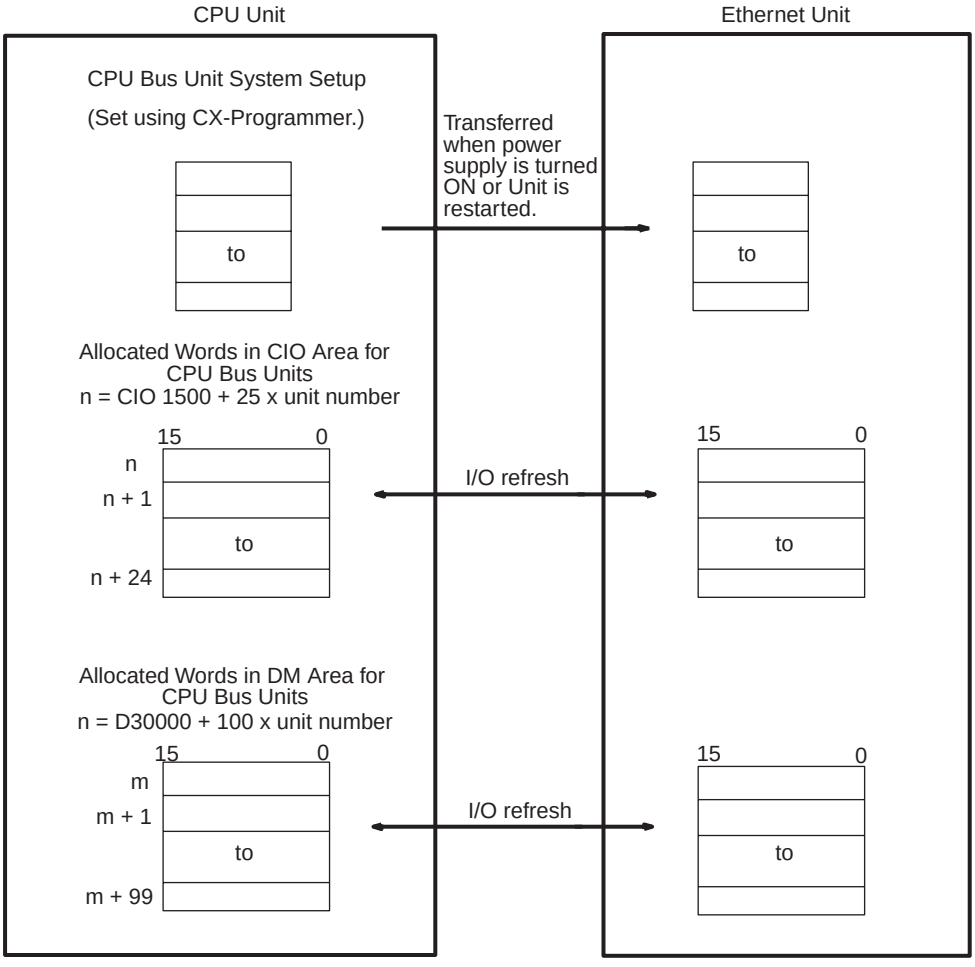

The words in the CIO Area and DM Area are allocated according to the unit number as shown in the following tables. The 25 words are allocated per Unit in the CIO Area and 100 word are allocated per Unit in the DM Area.

CIO Area Allocations

Unit No. (decimal)	Allocated words	Unit No. (decimal)	Allocated words
0 (0)	CIO 1500 to CIO 1524	8 (8)	CIO 1700 to CIO 1724
1 (1)	CIO 1525 to CIO 1549	9 (9)	CIO 1725 to CIO 1749
2 (2)	CIO 1550 to CIO 1574	A (10)	CIO 1750 to CIO 1774
3 (3)	CIO 1575 to CIO 1599	B (11)	CIO 1775 to CIO 1799
4 (4)	CIO 1600 to CIO 1624	C (12)	CIO 1800 to CIO 1824
5 (5)	CIO 1625 to CIO 1649	D (13)	CIO 1825 to CIO 1849
6 (6)	CIO 1650 to CIO 1674	E (14)	CIO 1850 to CIO 1874
7 (7)	CIO 1675 to CIO 1699	F (15)	CIO 1875 to CIO 1899

DM Area Allocations

Unit No. (decimal)	Allocated words	Unit No. (decimal)	Allocated words
0 (0)	D30000 to D30099	8 (8)	D30800 to D30899
1 (1)	D30100 to D30199	9 (9)	D30900 to D30999
2 (2)	D30200 to D30299	A (10)	D31000 to D31099
3 (3)	D30300 to D30399	B (11)	D31100 to D31199
4 (4)	D30400 to D30499	C (12)	D31200 to D31299
5 (5)	D30500 to D30599	D (13)	D31300 to D31399
6 (6)	D30600 to D30699	E (14)	D31400 to D31499
7 (7)	D30700 to D30799	F (15)	D31500 to D31599

4-2 CPU Bus Unit System Setup

To operate the Ethernet Unit as a node on an Ethernet network, the required parameters must be set in the CPU Bus Unit System Setup, part of the CPU Unit's Parameter Areas. If any of the following items apply, then the system parameters must be set.

- Either the IP address table or both the IP address table and automatic address generation are used as the destination IP address conversion method.
- Transmissions are broadcast using a host number set to all zeroes as the broadcast address (when UNIX 4.2BSD specifications are used for the broadcast address).
- The FINS UDP port number is set to a value other than 9600.
- With CJ-series Ethernet Units, the local IP address is set with the allocated words in the DM Area.
- A subnet mask other than the one determined from the IP address is set.
- A login name other than CONFIDENTIAL is used for the FTP server function.
- Communications between segments are required.
- The mail function is used.

Newly set parameters go into effect after the Ethernet Unit has been restarted or after the CPU Unit is started again.

The settings are made using the Unit settings on the CX-Programmer.

Note The CPU Bus Unit System Setup is located in the CPU Unit's Parameter Area, and not in I/O Memory; parameters cannot be written using instructions or by editing I/O Memory. The settings can be made only using the CX-Program-

mer. With CJ-series Ethernet Units, however, it is possible to set the local IP address and the subnet mask using the FINS command IP ADDRESS WRITE. For details, refer to *11-3-20 IP ADDRESS WRITE*.

4-2-1 Settings

Item	CX-Programmer default
Broadcast setting	All 1s (4.3BSD specifications)
Address conversion method	Automatic address generation
FINS UDP port number	9600
Local IP address (CJ Series only)	0.0.0.0 (The local IP address set in allocated words m+98 and m+99 of the DM Area is enabled.)
Subnet mask	0.0.0.0 (A value corresponding to the IP address is used.)
FTP login name	Not set. (CONFIDENTIAL)
FTP password	Not set.
IP address table	Not set.
IP router table	Not set.

Broadcast Settings

Set the method for specifying the broadcast address.

Setting	Meaning
All 1s (4.3BSD) (Default)	Broadcast with host number set to all ones. (4.3BSD specifications)
All 0s (4.2BSD)	Broadcast with host number set to all zeroes. (4.2BSD specifications)

Address Conversion Method

Set the method for converting the FINS node number to an IP address.

Setting	Meaning
Automatic generation (Default)	Uses automatic address generation. The IP address is automatically generated from the FINS node number without using an IP address table.
IP address table	Uses an IP address table.
Combined	Uses both automatic address generation and an I/O address table.

Automatic Address Generation

With the automatic generation, the FINS node number is regarded as the host number of the IP address, just as it is.

Destination IP address = (Local IP address and subnet mask) + Destination FINS node number

With the CS Series, the local IP address is set using the local IP address switches (rotary switches) on the back of the Unit. With the CJ Series, the local IP address is set using either the CPU Bus Unit System Setup or the allocated words in the DM Area. The method used depends on whether or not the local IP address setting in the CPU Bus Unit System Setup is 00.00.00.00. For details, refer to *Local IP Address (CJ Series Only)*.

Example

Local IP address: 130.25.36.8
Subnet mask: 255.255.0.0
Destination FINS node number:5
→Destination IP address = 130.25.0.5

Note When using automatic address generation (the default) for address conversion, make the following settings.

With the CS Series, set local IP address DIP switches 7 and 8 on the back of the Ethernet Unit to the same value as the node number setting on the front of the Unit, and set all other host settings to 0.

With the CJ Series, set the rightmost byte of the local IP address and the node number setting on the front of the Ethernet Unit to the same value, and set all other host settings to 0.

If the IP address host number does not match the node number, the ERC indicator (CS Series) or ERH indicator (CJ Series) will flash.

IP Address Table

With an IP address table, the address is converted according to a preset table of correspondences (i.e., an IP address table) between FINS node numbers and IP addresses.

The following is an example of an IP address table.

Destination FINS address ⇨

FINS node number	IP address
11	150.31.2.83
23	150.31.3.68

⇨ Destination IP address

FINS messages addressed to FINS node number 23 are sent to the node with IP address 150.31.3.68.

Automatic Address Generation and IP Address Table

With the combined method, first the IP address table is referenced. If the applicable node is not registered, then the automatic address generation method is used.

FINS UDP Port Number

Set the method for specifying the UDP port number for FINS communications.

Setting	Meaning
9600 (Default)	Uses the default value of 9600.
User-defined	Uses the input value (from 1 to 65535).

Local IP Address (CJ Series Only)

‘Set the IP address for CJ-series Ethernet Units. (The IP address can also be set with the allocated words in the DM Area.) This setting is enabled (as the local IP address) if it is set to any value other than 00.00.00.00. If it is set to 00.00.00.00, the value set in allocated words m+98 and m+99 in the DM Area is enabled.

For details on the setting method, refer to the CX-Programmer user’s manual.

Note Choose the method used to set the local IP address as follows:

Set the local IP address in the CPU Bus Unit System Setup when making other settings in the CPU Bus Unit System Setup (i.e., the default settings are not used). The settings are made with CX-Programmer.

Set the local IP address in the allocated words in the DM Area when using the CPU Bus Unit System Setup at its default settings (i.e., for simple operation). The setting is usually made with a Programming Console.

Application	Setting device	Setting area	Remarks
Operation with the CPU Unit Bus System Setup set as desired (i.e., The default settings are not used.)	CX-Programmer	CPU Unit Bus System Setup	The IP address set in the CPU Unit Bus System Setup is stored in the allocated words in the DM Area.
Simple operation (i.e., The CPU Unit Bus System Setup is used at its default settings. Only the IP address is set.)	Programming Console (CX-Programmer can also be used.)	Allocated words in the DM Area	The setting in the allocated words in the DM Area is enabled only when the IP address in the CPU Unit Bus System Setup is set to 00.00.00.00. If the IP address in the CPU Unit Bus System Setup is set to a value other than 00.00.00.00, this value is stored in the allocated words in the DM Area.

Note

1. With CS-series Ethernet Units, set the local IP address using the 8 rotary switches on the back of the Unit. For details, refer to *Setting the Local IP Address* on page 34.
2. If no local IP address is set in either the CPU Bus Unit System Setup or the allocated words in the DM Area (m+98 and m+99), the Ethernet Unit will not be able to perform communications. Be sure to set the local IP address in one of these areas. It is not possible, however, to set the following IP addresses. If any of these values are set, the ERH indicator will flash.
   - IP addresses where all network number bits are 0.
   - IP addresses where all host number bits are 0.
   - IP addresses where all subnet number bits are 0.
   - IP addresses starting with 127 (7F Hex), e.g., 127.35.21.16.

Subnet Mask

Set all bits in the subnet mask that correspond to the bits in the IP address used for the network number and the bits used for the subnet number to “1,” and set all bits in the subnet mask that correspond to the bits in the IP address used for the host number to “0”. The subnet mask must be set only when configuring a system which includes subnetworks.

If no subnet mask is set, the subnet mask will be automatically set to one of the following values, depending on the local IP address setting:

Class	Subnet mask value
Class-A IP address	255.0.0.0
Class-B IP address	255.255.0.0
Class-C IP address	255.255.255.0

The default is 0.0.0.0. (A value corresponding to the IP address class is used.)

FTP Login Name

Enter the user’s FTP server login name using up to 12 characters. Alphanumeric characters, hyphens, commas, quotation marks, and underlines can be used in login name. Once the login name has been set, a password must also be set or both the FTP login name and FTP password will be invalid.

If the login name is incorrectly specified, or if no login name is specified at all, the default login name of “CONFIDENTIAL” will be used and no FTP password will be required. The default is for no FTP login name to be set.

FTP Password

Enter the Unit’s FTP server password using up to eight characters. Alphanumeric characters, hyphens, commas, quotation marks, and underlines can be used as password characters. If a login name has been set, then a password must also be set or both the FTP login name and FTP password will be invalid. The default is for no FTP password to be set.

IP Address Table

This table contains the conversion data used to generate IP addresses from FINS node numbers when using FINS communications. This table is ignored if the IP address conversion method is set to automatic generation only. The IP address table cannot be edited. It is configured as follows by the CX-Programmer:

FINS node number	IP address
11	150.31.2.83
23	150.31.6.68

Setting range: 1 to 126 Setting range: 0.0.0.0 to 255.255.255.255.

Up to 32 records can be registered. The default is for nothing to be set.

For an explanation of how to make the settings, refer to the *CX-Programmer User’s Manual*.

IP Router Table

The IP router table sets how the Ethernet Unit communicates via the IP router with nodes on other IP network segments. This table cannot be edited when the automatic generation method is used for address conversion.

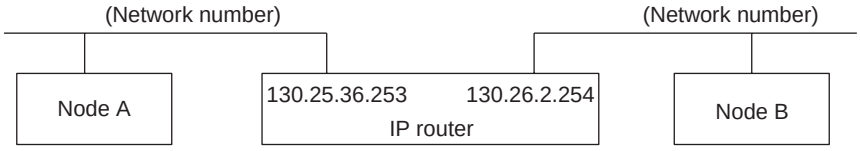

The IP router table is configured by the CX-Programmer as shown below. For the IP network number, set the network number of the other IP network segment that is to be communicated with. The length of the network number varies depending on the IP address class. Four bytes are provided in the field for setting the IP network number, so set the network from the beginning and then set 00 in the remainder.

Note With the CJ Series, it is possible to set one default IP router. The default IP router is selected if there is no network number for the communications destination in the IP router table. To specify the default IP router, specify 0.0.0.0 as the IP network address (net ID), and set the IP address of the default IP router.

Settings

The following settings are for node A when network No. 130.26.X.X is connected by the IP router with IP address 130.25.36.253. (Refer to the preceding diagram.)

IP network number	IP address of IP router
130.26.0.0	130.25.36.253

Setting range: 0.0.0.0 to 255.255.255.0

Setting range: 0.0.0.0 to 255.255.255.255

A maximum of eight records can be registered. The default is for nothing to be set.

For an explanation of how to make the settings, refer to the *CX-Programmer User's Manual*.

4-2-2 Mail Settings

Item	CX-Programmer default
Mail settings	None set.
User-created mail data address	Not set.
Local mail address	Not set.
Destination mail address	Not set.
SMTP server address	0.0.0.0 (Not set.)

Mail Settings

User Data in User Mail

Specify whether or not user data is to be added to mail contents when mail is sent by turning ON the Mail Send Switch in the CPU Unit's I/O Memory. (Refer to page 68.) The user data is ASCII data stored with the CPU Unit's I/O memory address set for the mail function's user-created mail data address. When user data is sent, 1,024 bytes or the data up to the null code (00 Hex) will be sent.

Setting	Meaning
Not selected (Default)	User data not included in user mail.
Selected	User data included in user mail.

Error Log in User Mail

Specify whether or not all error log information is to be added to mail contents when mail is sent by turning ON the Mail Send Switch in the CPU Unit's I/O Memory. (Refer to *Mail Send Switch* in *4-3 CIO Area Allocations*.)

Setting	Meaning
Not selected (Default)	Error log information not included in user mail.
Selected	Error log information included in user mail.

Status in User Mail

Specify whether or not status information is to be added to mail contents when mail is sent by turning ON the Mail Send Switch in the CPU Unit's I/O Memory. (Refer to *Mail Send Switch* in *4-3 CIO Area Allocations*.)

Setting	Meaning
Not selected (Default)	Status information not included in user mail.
Selected	Status information included in user mail.

Sending Mail for Errors

Specify whether or not mail is to be sent to a preset mail address whenever an error is registered in the error log. The following types of data can be specified to be sent as mail.

- User Data
  (Refer to *Sending User Data for Errors* below.)
- Error Log Information
  (Refer to *Sending Error Log Information for Errors* below.)
- Status Information
  (Refer to *Status Information for Errors* below.)

If none of these types of data is selected, mail will not be sent even if the setting is made for mail to be sent whenever an error is registered.

Setting	Meaning
Not selected (Default)	Mail not sent when error is registered in error log.
Selected	Mail not sent when error is registered in error log.

Sending User Data for Errors

Specify whether or not user data is to be added to mail contents when mail is sent whenever an error is registered to the error log.

Setting	Meaning
Not selected (Default)	User data not included in mail when error is registered to error log.
Selected	User data included in mail when error is registered to error log.

Sending Error Log Information for Errors

Specify whether or not all error log information is to be added to mail contents when mail is sent whenever an error is registered to the error log.

Setting	Meaning
Not selected (Default)	Error log information not included in mail when error is registered to error log.
Selected	Error log information included in mail when error is registered to error log.

Sending Status Information for Errors

Specify whether or not status information is to be added to mail contents when mail is sent whenever an error is registered to the error log.

Setting	Meaning
Not selected (Default)	Status information not included in mail when error is registered to error log.
Selected	Status information included in mail when error is registered to error log.

Periodic Mail

Specify whether or not mail is to be sent at the time intervals set for the mail interval in the mail settings. The following types of data can be specified to be sent as mail.

- User data
  (Refer to *Periodic Mail for User Data* below.)
- Error log information
  (Refer to *Periodic Mail for Error Log Information* below.)
- Status information
  (Refer to *Periodic Mail for Status Information*.)

If none of these types of data is selected, mail will not be sent even if the setting is made for mail to be sent whenever an error is registered.

Setting	Meaning
Not selected (Default)	Mail is not sent periodically.
Selected	Mail is sent periodically.

Mail Interval

When mail is sent periodically, it is sent at the time interval that is set here. The setting range is 1 to 1,440, in units of 10 seconds, so the mail can be sent at intervals of from once every 10 seconds to once every 10 days. This setting is only enabled when the periodic mail setting (see above) is selected.

If the mail interval is set to 0, then mail will not be sent periodically. If it is set to a value greater than 1,440, it will be processed as 1,440 (10 days).

The default setting is 0 (mail not sent periodically).

Periodic Mail for User Data

Specify whether or not user data is to be added to mail contents when mail is sent periodically. The user data is ASCII data stored with the CPU Unit's I/O memory address set for the mail function's "user-created mail data address" at the beginning. (When user data is sent, 1,024 bytes or the data up to the null code (00 Hex) is transmitted.)

Setting	Meaning
Not selected (Default)	User data not included in periodic mail.
Selected	User data included in periodic mail.

Periodic Mail for Error Log Information

Specify whether or not all error log information (64 records max.) is to be added to mail contents when mail is sent periodically.

Setting	Meaning
Not selected (Default)	Error log information not included in periodic mail.
Selected	Error log information included in periodic mail.

Periodic Mail for Status Information

Specify whether or not status information is to be added to mail contents when mail is sent periodically.

Setting	Meaning
Not selected (Default)	Status information not included in periodic mail.
Selected	Status information included in periodic mail.

User-created Mail Data Address

Specify, by area classification and beginning word address, the CPU Unit's memory address for the data (user-created information) to be transmitted when data is sent by user request. The default setting is for no address to be set.

Local Mail Address

In 50 or fewer characters, specify the mail address to be entered in the "From" field in the mail.

Destination Mail Address

In 50 or fewer characters, specify the address to which the mail is to be sent.

SMTP Server Address

Specify the IP address of the mail server (i.e., the SMTP server address). The setting range is 0.0.0.0 to 255.255.255.255. The default is 0.0.0.0 (nothing set).

4-3 CIO Area Allocations

The various kinds of data are stored in the offset positions shown in the following diagram, from the beginning word in the area for each Unit.

The beginning word n is calculated by the following equation:

Beginning word n = CIO 1500 + (25 x unit number)

Offset	Bit 15 … 8	Bit 7 … 0	Data direction	Related communications services
n	Unit Control Switch		CPU Unit to Ethernet Unit	Socket Services (Refer to *Section 6 Socket Services*.) Mail Function (Refer to *Section 8 Mail*.)
n+1	UDP Socket No. 1 Status		Ethernet Unit to CPU Unit	
n+2	UDP Socket No. 2 Status			
n+3	UDP Socket No. 3 Status			
n+4	UDP Socket No. 4 Status			
n+5	UDP Socket No. 5 Status			
n+6	UDP Socket No. 6 Status			
n+7	UDP Socket No. 7 Status			
n+8	UDP Socket No. 8 Status			
nn+9	TCP Socket No. 1 Status			Socket Services (Refer to *Section 6 Socket Services*.)
n+10	TCP Socket No. 2 Status			
n+11	TCP Socket No. 3 Status			
n+12	TCP Socket No. 4 Status			
n+13	TCP Socket No. 5 Status			
n+14	TCP Socket No. 6 Status			
n+15	TCP Socket No. 7 Status			
n+16	TCP Socket No. 8 Status			
n+17	Service Status			FTP Service, etc.
n+18	Error Status			All error conditions
n+19	Socket Service Request Switches 2	Socket Service Request Switches 1	CPU Unit to Ethernet Unit	Socket Services (Refer to *Section 6 Socket Services*.)
n+20	Socket Service Request Switches 4	Socket Service Request Switches 3		
n+21	Socket Service Request Switches 6	Socket Service Request Switches 5		
n+22	Socket Service Request Switches 8	Socket Service Request Switches 7		
n+23	(Not used.)			
n+24+	(Not used.)			

The following items in the diagram can also be checked using software switch settings on the CX-Programmer.

- The status of UDP/TCP sockets 1 to 8 (Opening Flag, Receiving Flag, Sending Flag, Closing Flag, Results Storage Error Flag, Socket Open Flag)
- Service status (FTP status)

For explanations of how to use the related communications services listed in the above diagram, refer to the indicated sections.

Unit Control Switches (CPU Unit to Ethernet Unit)

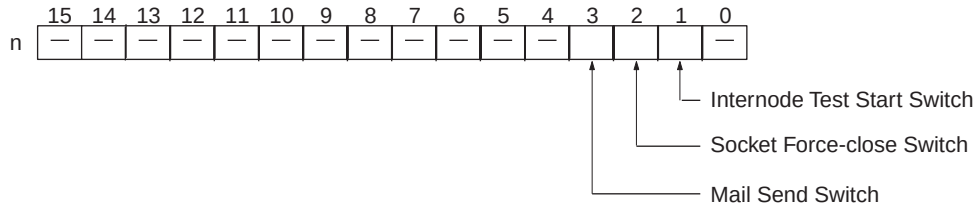

Bit	Switch	Status	Manipulated by	Unit operation	Reference
0	(Not used.)	---	---	---	---
1	Internode Test Start Switch	ON	User	Executes internode test while ON.	*9-3 Internode Test*
		OFF	User	Stops internode test.	
2	Socket Force-close Switch	ON	User	All sockets are forcibly closed when this bit turns ON.	Page 129
		OFF	Unit	Turned OFF by Unit after sockets are closed.	
3	Mail Send Switch	ON	User	User mail is sent when this bit turns ON.	*8-1-3 Sending Mail*
		OFF	Unit	Turned OFF by Unit after user mail has been sent.	
4 to 15	(Not used.)	---	---	---	---

Internode Test Start Switch (Bit 1)

Internode testing is executed and stopped by turning ON and OFF this switch. The parameters for designating the remote node for testing, and so on, are set in the allocated words in the DM Area. For details, refer to *9-3 Internode Test*. The software switch settings on the CX-Programmer can also be used to set parameters and control internode tests.

Socket Force-close Switch (Bit 2)

All UDP and TCP sockets used for socket services can be force-closed by turning ON this switch. This can be used for operations such as error processing.

Be careful not to force-close sockets during communications, or an error will occur. After all sockets have been force-closed, the Ethernet Unit will turn the switch OFF again. Do not attempt to forcibly manipulate this switch before it is automatically turned OFF by the Unit.

Ports used exclusively by the Ethernet Unit will not be closed.

Mail Send Switch (Bit 3)

User mail can be sent by turning ON this switch. The contents of the user mail are set in the CPU Bus Unit System Setup.

After the user mail has been sent, the Ethernet Unit will turn this switch OFF again. Do not attempt to forcibly manipulate this switch before it is automatically turned OFF by the Unit.

Status of UDP/TCP Sockets 1 to 8 (Ethernet Unit to CPU Unit)

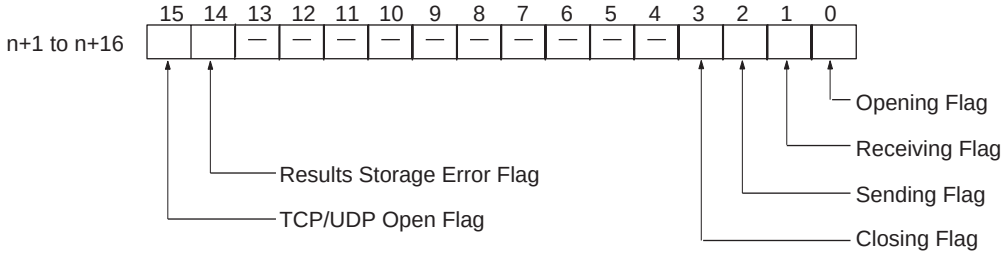

Bit	Flag	Status	Manipulated by	Unit operation	Reference
0	Opening Flag	ON	Unit	ON during open processing. (Turns ON when open request is received.)	Section 6 Socket Services
		OFF	Unit	Turns OFF when open processing has been completed.	
1	Receiving Flag	ON	Unit	ON during receive processing. (Turns ON when receive request is received.)	
		OFF	Unit	Turns OFF when receive processing has been completed.	
2	Sending Flag	ON	Unit	ON during send processing. (Turns ON when send request is received.)	
		OFF	Unit	Turns OFF when send processing has been completed.	
3	Closing Flag	ON	Unit	ON during close processing. (Turns ON when close request is received.)	
		OFF	Unit	Turns OFF when close processing has been completed.	
4 to 13	(Not used.)	---	---	---	---
14	Results Storage Error Flag	ON	Unit	Turns ON if there is an error in storing the results when socket services are used by means of the CMND(490) instruction.	Section 6 Socket Services
		OFF	Unit	Turns OFF when the next request is received. (Connected by TCP.)	
15	TCP/UDP Open Flag	ON	Unit	Turns ON when open processing has been completed.	
		OFF	Unit	Turns OFF when close processing has been completed. (Stays OFF for abnormal open processing completion.)	

Note The status of these flags can also be checked using the software switch settings on the CX-Programmer.

Opening Flag (Bit 0)

Turns ON when an open request is received either by control switch manipulation or the CMND(490) instruction, and turns OFF again when the open processing has been completed. When CMND(490) is used, the Results Storage Error Flag (bit 14) will turn ON at the same time as the Opening Flag turns OFF if there is an error in the Results Storage Area designation.

Receiving Flag (Bit 1)

Turns ON when a receive request is received either by control switch manipulation or the CMND(490) instruction, and turns OFF again when the receive processing has been completed. When CMND(490) is used, the Results Storage Error Flag (bit 14) will turn ON at the same time as the Receiving Flag turns OFF if there is an error in the Results Storage Area designation.

Sending Flag (Bit 2)

Turns ON when a send request is received either by control switch manipulation or the CMND(490) instruction, and turns OFF again when the send processing has been completed. When CMND(490) is used, the Results Storage Error Flag (bit 14) will turn ON at the same time as the Sending Flag turns OFF if there is an error in the Results Storage Area designation.

Closing Flag (Bit 3)

Turns ON when a close request is received either by control switch manipulation or the CMND(490) instruction, and turns OFF again when the close processing has been completed. When CMND(490) is used, the Results Storage Error Flag (bit 14) will turn ON at the same time as the Closing Flag turns OFF if there is an error in the Results Storage Area designation.

Results Storage Error Flag (Bit 14)

Turns ON if there is an error in the Results Storage Area for a socket service request (open, receive, send, close) made using CMND(490). This flag turns ON at the same time as the services request processing flags (bits 0 to 3) turn OFF. It remains ON until the next services request is received, and then it turns OFF again. When this flag turns ON, check the set values in the Results Storage Area.

The Results Storage Error Flag does not operate when socket services are requested by control switch manipulation.

TCP/UDP Open Flag (Bit 15)

Remains ON while a socket is open by means of control switch manipulation or the CMND(490) instruction. In the case of TCP, it indicates a connection. When the socket is closed, this flag turns OFF again. (If the socket did not close properly, the flag remains ON.)

Check to be sure that this flag is ON before executing a send or receive request.

Service Status (Ethernet Unit to CPU Unit)

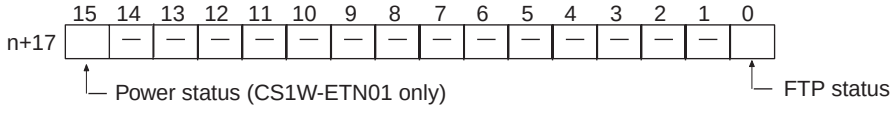

Bit	Name	Status	Manipulated by	Unit operation		Reference
0	FTP Status Flag	ON	Unit	FTP server operating. (FTP client connected.)		Page 173
		OFF	Unit	FTP server on standby. (FTP client not connect.		
2 to 14	(Not used.)	---	---	---		---
15	Power status (CS1W-ETN01 only)	ON	Unit	Power is being supplied to transceiver.	CS1W-ETN11: Always OFF	Page 42
		OFF	Unit	Power is not being supplied to transceiver.	CJ1W-ETN11: Always OFF	

FTP Status (Bit 0)

Turns ON while connected to an FTP client, and OFF while not connected. With the FTP server function only one FTP client can be connected at a time, so while this bit is ON no other clients can connect to the server.

The FTP status is also shown by the Ethernet Unit's FTP indicator, as follows:

Not lit: FTP server on standby. (FTP status: OFF)
Lit: FTP server operating. (FTP status: ON)

Power Status (Bit 15)

Turns ON while power is being supplied from the Ethernet Unit to the transceiver, and OFF when power is not being supplied. Check to be sure that this bit is ON before beginning communications.

Error Status (Ethernet Unit to CPU Unit)

The status of errors that occur at the Ethernet Unit is reflected as shown in the following diagram.

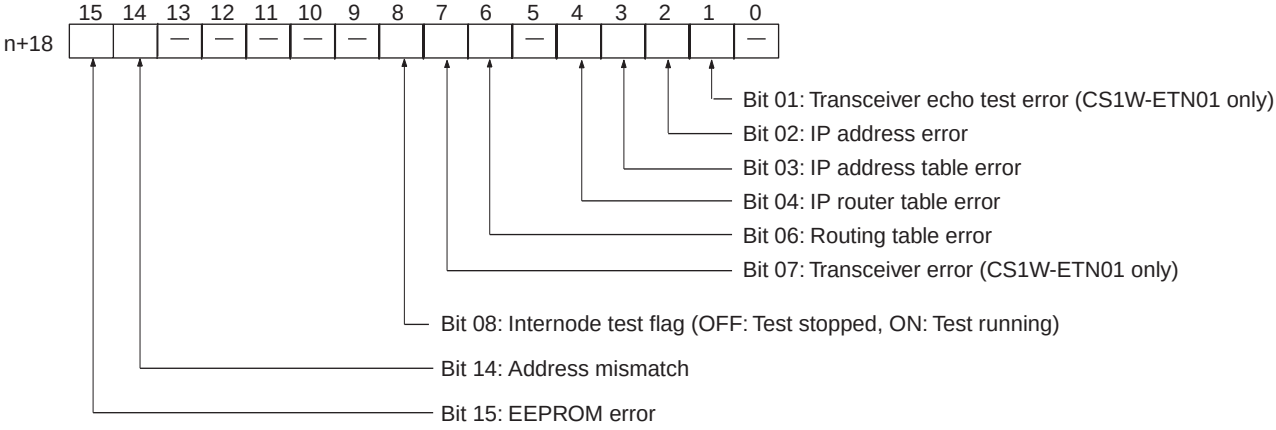

Bit	Error	Status	Manipulated by	Unit operation
0	(Not used.)	---	---	---
1	Transceiver echo test error (CS1W-ETN01 only) (See note.)	ON	Unit	ON if an error occurred during the self diagnostic testing after the Unit was turned ON or reset.
		OFF	Unit	OFF if the self diagnostic testing after the Unit was turned ON or reset was normal.
2	IP address setting error	ON	Unit	ON if any of the following conditions apply to the IP address. • All bits in the host ID are 0 or 1. • All bits in the network ID are 0 or 1. • All bits in the subnet ID are 1. • The IP address begins with 127 (0x7F)
		OFF	Unit	OFF when the IP address is normal.
3	IP address table error	ON	Unit	On if the IP address table information is incorrect.
		OFF	Unit	OFF when the IP address table is normal.
4	IP router table error	ON	Unit	ON if the IP router table information is incorrect.
		OFF	Unit	OFF when the IP address table is normal.
5	(Not used.)	---	---	---
6	Routing table error	ON	Unit	ON if the routing table information is incorrect.
		OFF	Unit	OFF when the routing table is normal.
7	Transceiver error (CS1W-ETN01 only) (See note.)	ON	Unit	ON when the transceiver cable is disconnected, the transceiver is not receiving power, or the transceiver is defective. Returns to OFF when the transceiver status returns to normal.
		OFF	Unit	OFF when the transceiver is normal.
8	Internode Test Flag	ON	Unit	ON during internode testing.
		OFF	Unit	OFF while internode testing is stopped.
9 to 13	(Not used.)	---	---	---
14	Address mismatch	ON	Unit	ON if the remote IP address is set to automatic generation but the local IP address host number and FINS node number do not agree.
		OFF	Unit	OFF under all other circumstances.
15	EEPROM error	ON	Unit	ON if an error has occurred in the EEPROM memory.
		OFF	Unit	OFF when the EEPROM memory is normal.

Note A transceiver is built into the CS1W-ETN11 and CJ1W-ETN11. If this bit turns ON, the Ethernet Unit has malfunctioned.

Socket Service Request Switches 1 to 8 (CPU Unit to Ethernet Unit)

When a socket service request is executed by control switch manipulation, it is the following bits that are manipulated. For details, refer to *6-2 Using Socket Services with Socket Service Request Switches*.

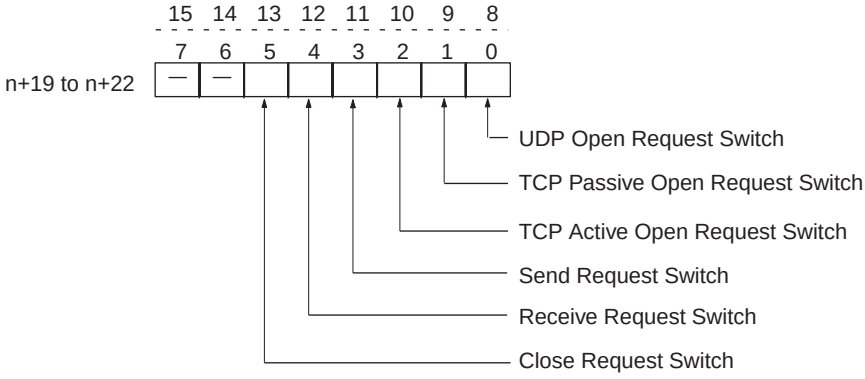

Bit		Switch	Status	Manipulated by	Unit operation	Page
8	0	UDP Open Request Switch	ON	User	UDP socket opened when switch is turned ON.	117 to 122
			OFF	Unit	Unit turns OFF switch when open processing has been completed (i.e., when a connection has been made).	
9	1	TCP Passive Open Request Switch	ON	User	Passive TCP socket opened when switch is turned ON.	
			OFF	Unit	Unit turns OFF switch when open processing has been completed (i.e., when a connection has been made).	
10	2	TCP Active Open Request Switch	ON	User	Active TCP socket opened when switch is turned ON.	
			OFF	Unit	Unit turns OFF switch when open processing has been completed (i.e., when a connection has been made)	
11	3	Send Request Switch	ON	User	Send processing executed when switch is turned ON. (The protocol (TCP/UDP) is determined when the socket is opened.)	
			OFF	Unit	Unit turns OFF switch when send processing has been completed.	
12	4	Receive Request Switch	ON	User	Receive processing executed when switch is turned ON. (The protocol (TCP/UDP) is determined when the socket is opened.)	
			OFF	Unit	Unit turns OFF switch when receive processing has been completed.	
13	5	Close Request Switch	ON	User	Close processing executed when switch is turned ON. (The protocol (TCP/UDP) is determined when the socket is opened.)	
			OFF	Unit	Unit turns OFF switch when close processing has been completed.	
14	6	(Not used.)	---	---	---	---
15	7	(Not used.)	---	---	---	---

4-4 DM Area Allocations

The various kinds of data are stored in the offset positions shown in the following diagram, from the beginning word in the area for each Unit.

The beginning word m is calculated by the following equation:

Beginning word m = D30000 + (100 x unit number)

Offset	Bit 15 … 8 7 … 0	Data direction	Related communications services
m	Internode test remote network address and node number	CPU Unit to Ethernet Unit	Internode Test Function (Refer to *9-3 Internode Test*.)
m+1	Internode test number of send bytes		
m+2	Internode test response monitoring time		
m+3	Internode test status	Ethernet Unit to CPU Unit	
m+4	Number of internode test runs		
m+5	Number of internode test timeout errors		
m+6	Number of internode test response errors		
m+7	Number of internode test send errors		
m+8	Number of times internode test data did not match		
m+9	TCP socket No. 1 connection status		Socket Services (Refer to *Section 6 Socket Services*.)
⋮	⋮		
m+16	TCP socket No. 8 connection status		
m+17	Mail status		Mail function (Refer to *Section 8 Mail*.)
m+18	Socket Services Parameter Area 1	CPU Unit to Ethernet Unit	Socket Services (Refer to *Section 6 Socket Services*.)
m+28	Socket Services Parameter Area 2		
⋮	⋮		
m+88	Socket Services Parameter Area 8		
m+98 m+99	IP Address Display/Setting Area (See note.)	Ethernet Unit to CPU Unit or CPU Unit to Ethernet Unit	

Note For CS-series Ethernet Units, this area is the IP Address Display Area and data in this area can be transferred from the Ethernet Unit to the CPU Unit only. For CJ-series Ethernet Units, this area is the IP Address Display/Setting Area and data in this area can be transferred in either direction.

The meanings of the items shown in the above diagram are explained on the following pages. For details regarding the related communications services shown in the diagram, refer to the indicated sections.

Internode Test Remote Network Address and Node Number (CPU Unit to Ethernet Unit)

	15 14 13 12 11 10 9 8	7 6 5 4 3 2 1 0
m	Remote network address	Remote node number

Specify the remote network address and node number in hexadecimal within the following ranges:

Remote network address: 00 to 7F Hex (0 to 127 decimal)
Remote node number: 01 to 7E Hex (0 to 126 decimal)

If a remote network address is set to 00, it will specify the local network (i.e., the network to which the Ethernet Unit is connected.)

Internode Test Number of Send Bytes (CPU Unit to Ethernet Unit)

	15 14 13 12 11 10 9 8 7 6 5 4 3 2 1 0
m+1	Number of send bytes (0000 to 07CC Hex)

Specify, in hexadecimal, the number of bytes of test data to be sent between nodes.

0000 (Hex): 1,996 bytes
0001 to 07CC (Hex): 1 to 1,996 bytes

Internode Test Response Monitoring Time (CPU Unit to Ethernet Unit)

	15	14	13	12	11	10	9	8	7	6	5	4	3	2	1	0
m+2	Response monitoring time (0000 to FFFF Hex)															

Specify, in hexadecimal, the amount of time to wait for the internode test response.

0000 (Hex): 2 seconds
0001 to FFFF (Hex): 0.01 to 655.35 seconds

Internode Test Status (Ethernet Unit to CPU Unit)

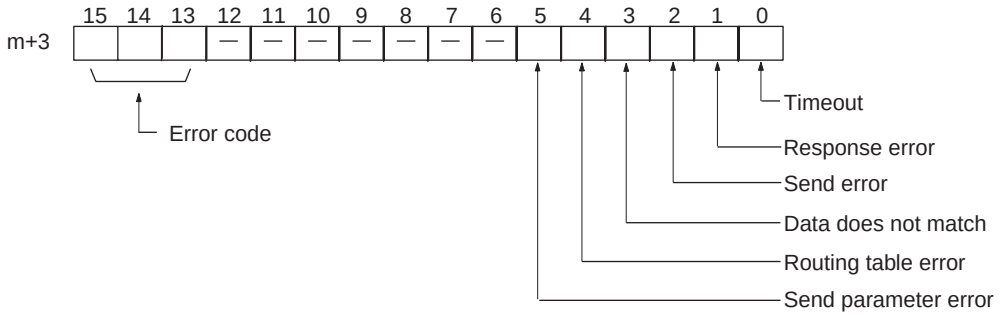

Internode test results are reflected here. (The bits all turn back OFF when the internode test is started.)

Bits 0 to 5 turn ON when their applicable error occurs.

The error code for the error that occurred is stored in bits 13 to 15. The meanings of the error codes are shown in the following table.

Bit			Meaning
15	14	13	
0	0	0	Normal
0	0	1	Timeout error
0	1	0	Response (response code) error
0	1	1	Send error
1	0	0	Data disagreement error
1	0	1	Routing table error (See note.)
1	1	0	Send parameter error (See note.)

Note When a routing table error or a sent parameter error occurs, the number of internode test runs is not incremented.

Number of Internode Test Runs (Ethernet Unit to CPU Unit)

	15	14	13	12	11	10	9	8	7	6	5	4	3	2	1	0
m+4	Number of test runs (0000 to FFFF Hex)															

Internode tests are executed repeatedly as long as the Internode Test Start Switch, one of the Unit Control Switches in the CIO area, remains ON.

In this word, specify in hexadecimal the number of times that the internode test is actually to be executed.

0000 to FFFF (Hex): 0 to 65,535 times

When the count reaches FFFF (Hex), it will start over again at 0. The count value will be retained until the internode test is restarted.

Note When a routing table error or a transmission parameter error occurs, the number of internode tests is not incremented.

Number of Internode Test Timeout Errors (Ethernet Unit to CPU Unit)

	15	14	13	12	11	10	9	8	7	6	5	4	3	2	1	0
m+5	Number of timeout errors (0000 to FFFF)															

The number of timeout errors that have occurred in the internode test is stored in this word in hexadecimal.

0000 to FFFF (Hex): 0 to 65,535 times

When the count reaches FFFF (Hex), it will not go any further. The count value will be retained until the internode test is restarted.

Number of Internode Test Response Errors (Ethernet Unit to CPU Unit)

	15	14	13	12	11	10	9	8	7	6	5	4	3	2	1	0
m+6	Number of response errors (0000 to FFFF)															

The number of response errors that have occurred in the internode test is stored in this word in hexadecimal.

0000 to FFFF (Hex): 0 to 65,535 times

When the count reaches FFFF (Hex), it will not go any further. The count value will be retained until the internode test is restarted.

Number of Internode Test Transmission Errors (Ethernet Unit to CPU Unit)

	15	14	13	12	11	10	9	8	7	6	5	4	3	2	1	0
m+7	Number of transmission errors (0000 to FFFFHex)															

The number of transmission errors that have occurred in the internode test is stored in this word in hexadecimal.

0000 to FFFF (Hex): 0 to 65,535 times

When the count reaches FFFF (Hex), it will not go any further. The count value will be retained until the internode test is restarted.

Number of Times Internode Test Data Did Not Match (Ethernet Unit to CPU Unit)

	15	14	13	12	11	10	9	8	7	6	5	4	3	2	1	0
m+8	Number of data disagreement errors (0000 to FFFF)															

The number of data disagreement errors that have occurred in the internode test is stored in this word in hexadecimal.

0000 to FFFF (Hex): 0 to 65,535 times

When the count reaches FFFF (Hex), it will not go any further. The count value will be retained until the internode test is restarted.

TCP Socket No. (1 to 8) Connection Status (Ethernet Unit to CPU Unit)

	15	14	13	12	11	10	9	8	7	6	5	4	3	2	1	0
m+9 to m+16	—	—	—	—	—	—	—	—	—	—	—	—				

TCP connection status

The connection status for each TCP socket is stored by code in this word. For details, refer to *Appendix D TCP Status Transitions*.

Mail Status (Ethernet Unit to CPU Unit)

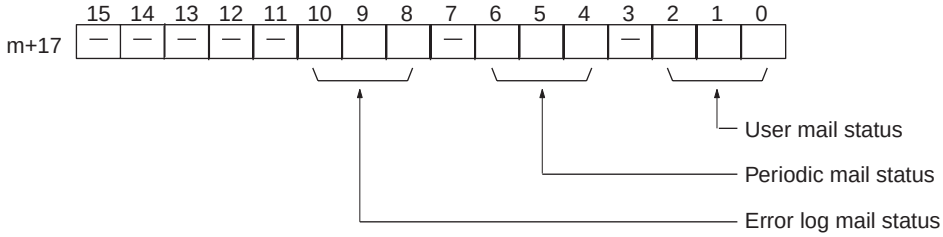

The transmission statuses of user mail, periodic mail, and error log mail are stored in this word as shown in the following table.

Bits			Status
2	**1**	**0**	
6	**5**	**4**	
10	**9**	**8**	
OFF	OFF	OFF	Mail is either waiting to be sent or can be sent using the Mail Send Switch. No mail is being sent.
OFF	OFF	ON	Mail is being sent.
OFF	ON	OFF	Mail is either waiting to be sent or can be sent using the Mail Send Switch. The previous mail transmission was completed normally.
ON	ON	OFF	Mail is either waiting to be sent or can be sent using the Mail Send Switch. An error occurred in the previous mail transmission.
ON	ON	ON	Mail cannot be sent (system setting error).

Socket Services Parameter Area 1 to 8 (Ethernet Unit to CPU Unit)

Offset	Socket No. 1	...	Socket No. 8	15 14 13 12 11 10 9 8 7 6 5 4 3 2 1 0
+0	m+18	···	m+88	UDP/TCP socket number (1 to 8)
+1	m+19		m+89	Local UDP/TCP port number (0000 to FFFF Hex)
+2	m+20		m+90	Remote IP address (00000000 to FFFFFFFF Hex)
	m+21		m+91	
+4	m+22	···	m+92	Remote UDP/TCP port number (0000 to FFFF Hex)
+5	m+23		m+93	Number of send/receive bytes (0000 to 07C0 Hex (1984))
+6	m+24		m+94	Send/receive data address (Same as FINS variable area designation method.)
	m+25		m+95	
+8	m+26		m+96	Timeout value (0000 to FFFF Hex)
+9	m+27	···	m+97	Response code

When socket services are requested by control switch manipulation, the settings must be made in advance in a Socket Service Parameter Area. The parameters used will vary depending on the service requested. For details, refer to *6-2 Using Socket Services with Socket Service Request Switches*.

IP Address Display/Setting Area

CS-series Ethernet Units

	15 14 13 12	11 10 9 8	7 6 5 4	3 2 1 0
m+98	SW1	SW2	SW3	SW4
m+99	SW5	SW6	SW7	SW8

The set values of the Local IP Address Switches (rotary switches 1 to 8) on the back of the Ethernet Unit are read and stored here when the power is turned ON or the Unit restarted. If an incorrect address is set, 0000 (Hex) will

be stored here and the ERC indicator will flash. (Refer to *Setting the Local IP Address.*)

CJ-series Ethernet Units

	15	14	13	12	11	10	9	8	7	6	5	4	3	2	1	0
m+98	(1)				(2)				(3)				(4)			
m+99	(5)				(6)				(7)				(8)			

IP address: 12.34.56.78 (Hex)

If the local IP address in the CPU Bus Unit System Setup is set to a value other than 00.00.00.00, this area (words m+98 and m+99) will act as an IP Address Display Area and the local IP address set in the CPU Bus Unit System Setup will be read and stored here when the power is turned ON or the Unit restarted. If the local IP address in the CPU Bus Unit System Setup is set to 00.00.00.00 (the default setting), this value is read by the Ethernet Unit when the power is turned ON or the Unit restarted and is used as the local IP address.

Note Choose the method used to set the local IP address as follows:

Set the local IP address in the CPU Bus Unit System Setup when making other settings in the CPU Bus Unit System Setup (i.e., the default settings are not used). The settings are made with CX-Programmer.

Set the local IP address in the allocated words in the DM Area when using the CPU Bus Unit System Setup at its default settings (i.e., for simple operation). The setting is usually made with a Programming Console.

Application	Setting device	Setting area	Remarks
Operation with the CPU Unit Bus System Setup set as desired (i.e., The default settings are not used.)	CX-Programmer	CPU Unit Bus System Setup	The IP address set in the CPU Unit Bus System Setup is stored in the allocated words in the DM Area.
Simple operation (i.e., The CPU Unit Bus System Setup is used at its default settings. Only the IP address is set.)	Programming Console (CX-Programmer can also be used.)	Allocated words in the DM Area	The setting in the allocated words in the DM Area is enabled only when the IP address in the CPU Unit Bus System Setup is set to 00.00.00.00. If the IP address in the CPU Unit Bus System Setup is set to a value other than 00.00.00.00, this value is stored in the allocated words in the DM Area.

Note

1. If a value other than 00.00.00.00 is set as the local IP address in the CPU Bus Unit System Setup, even if an IP address is set in the allocated words in the DM Area, it will be overwritten with the setting in the CPU Bus Unit System Setup.
2. If no local IP address is set in either the CPU Bus Unit System Setup or the allocated words in the DM Area (m+98 and m+99), the Ethernet Unit will not be able to perform communications. Be sure to set the local IP address in one of these areas. It is not possible, however, to set the following IP addresses. If any of these values are set, the ERH indicator will flash.
   - IP addresses where all network number bits are 0.
   - IP addresses where all host number bits are 0.
   - IP addresses where all subnet number bits are 0.

SECTION 5
FINS Communications

This section provides information on communicating on Ethernet Systems and interconnected networks using FINS commands. The information provided in the section deals only with FINS communications in reference to Ethernet Units.

FINS commands issued from a PC are sent via the SEND(090), RECV(098), and CMND(490) instructions programmed into the user ladder-diagram program. Although an outline of these instructions is provided in this section, refer to the *CS/CJ-series Programmable Controllers Programming Manual* (W340) for further details on programming these instructions.

5-1 Overview of FINS Communications 80
5-1-1 Communications On an Ethernet Network 80
5-1-2 FINS Communications Service Features 80
5-2 Procedure Before Using FINS Communications 82
5-3 Sending Commands From a PC 83
5-3-1 Communications Specifications 83
5-3-2 Program Example 92
5-3-3 Transmission Delays 93
5-4 Sending Commands From a Host Computer 96
5-4-1 Designating Remote Addresses 96
5-4-2 FINS Frames 97
5-4-3 Sample Program 99
5-4-4 Delays for Accessing PC Memory 101
5-5 FINS Server 102

5-1 Overview of FINS Communications

The FINS communications service enables client control of operations such as reading or writing server PC memory area data without the need to program these operations into the server PC user program. The Ethernet Unit uses a dedicated UDP/IP port to execute the FINS communications service. (Refer to *FINS UDP Port Number under 4-2-1 Settings*.)

5-1-1 Communications On an Ethernet Network

Data is sent and received as UDP packets on an Ethernet network. The FINS port number (default value: 9600) set in the CPU Bus Unit System Setup is used for FINS communications. (Refer to *4-2 CPU Bus Unit System Setup*.)

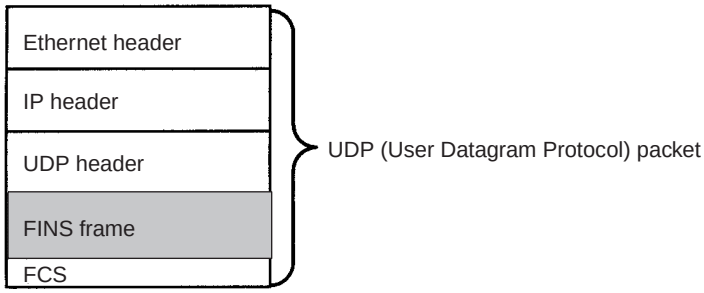

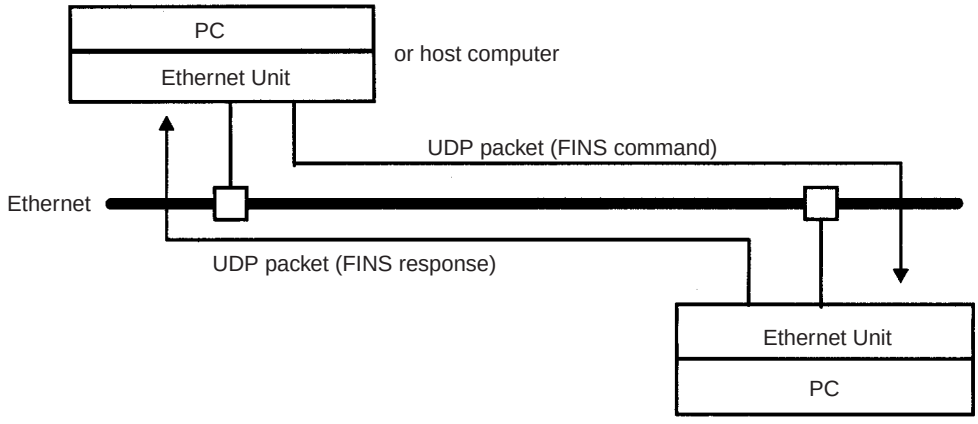

When a FINS command is issued from the Ethernet Unit, the IP address is found from the FINS address specified by CMND(490). For details, refer to *3-1 Before Operation*.

Note The UDP/IP protocol does not provide communications control to ensure communications reliability. Consequently, the FINS communications services using the UDP/IP protocols cannot guarantee that any message arrived safely and unaltered at the destination. Methods to ensure reliability, such as retries and appropriate processing of FINS responses, must be programmed into the user application.

5-1-2 FINS Communications Service Features

The FINS communications service is a function for controlling operations such as sending and receiving data, changing modes, and so on, between nodes on OMRON factory automation networks. It provides the following features.

- Communications instructions are executed in the user program.

- Writing data, changing modes, reading detailed information about Units, and so on, can be executed without any particular knowledge of communications procedures or network classification.
- Units and Boards that support FINS commands return responses automatically, so there is no need for a program at the receiving end.
- The FINS communications service is mainly used between OMRON CPU Bus Units, CPU Units, and Support Boards for FA Computers. By correctly setting information such as headers, however, it can also be used from ordinary Ethernet communications devices.

The FINS communications service can be used from a PC with either of the following three instructions:

- **SEND(090)/RECV(098)**

  SEND(090) and RECV(098) are used to send and receive data (area reading and writing).

- **CMND(490)**

  CMND(490) is used to send FINS commands. The particular FINS commands that are supported vary depending of the type of Unit or Board. For details on FINS commands addressed to Ethernet Units, refer to *Section 11 FINS Commands Addressed to Ethernet Units*. For details regarding FINS commands addressed to CS/CJ-series CPU Units, refer to the *CS/CJ-series Programmable Controllers Communications Commands Reference Manual* (W342).

The following table shows how the FINS communications service is used by the communications source and destination, for PC to PC and host computer to PC.

Local node to remote node	SEND(090)/RECV(098)	CMND(490) (FINS commands)
PC to PC	• When the PC executes SEND(090) or RECV(098), a program is not required for receiving a response. • When the PC receives a SEND(090) or RECV(098) instruction, a program is not required for processing the instruction. 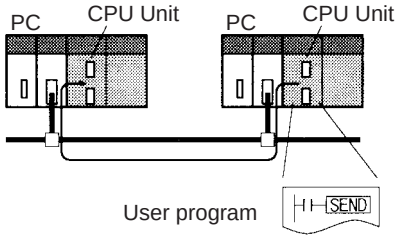	• When the PC executes CMND(490), a program is not required for receiving a response. • When the PC receives a CMND(490) instruction, a program is not required for processing the instruction. 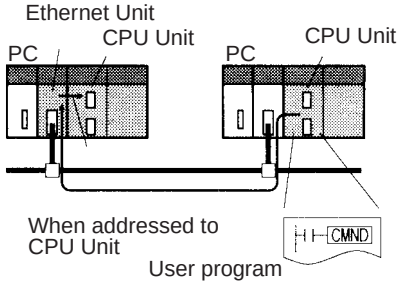
Host computer to PC	• The host computer issues the data for the SEND(090)/RECV(098) or CMND(490) instruction as a UDP datagram. Programs are required for sending data and for receiving and processing responses. • If the PC receives a SEND(090) or RECV(098) instruction, a program is not required for processing the instruction. 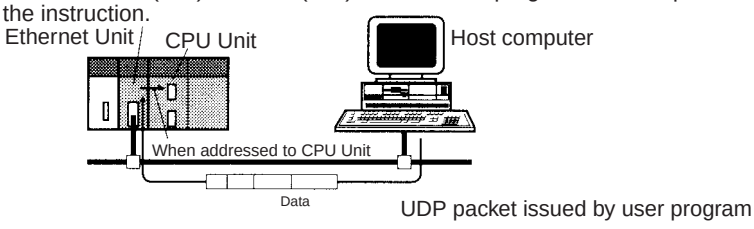	

5-2 Procedure Before Using FINS Communications

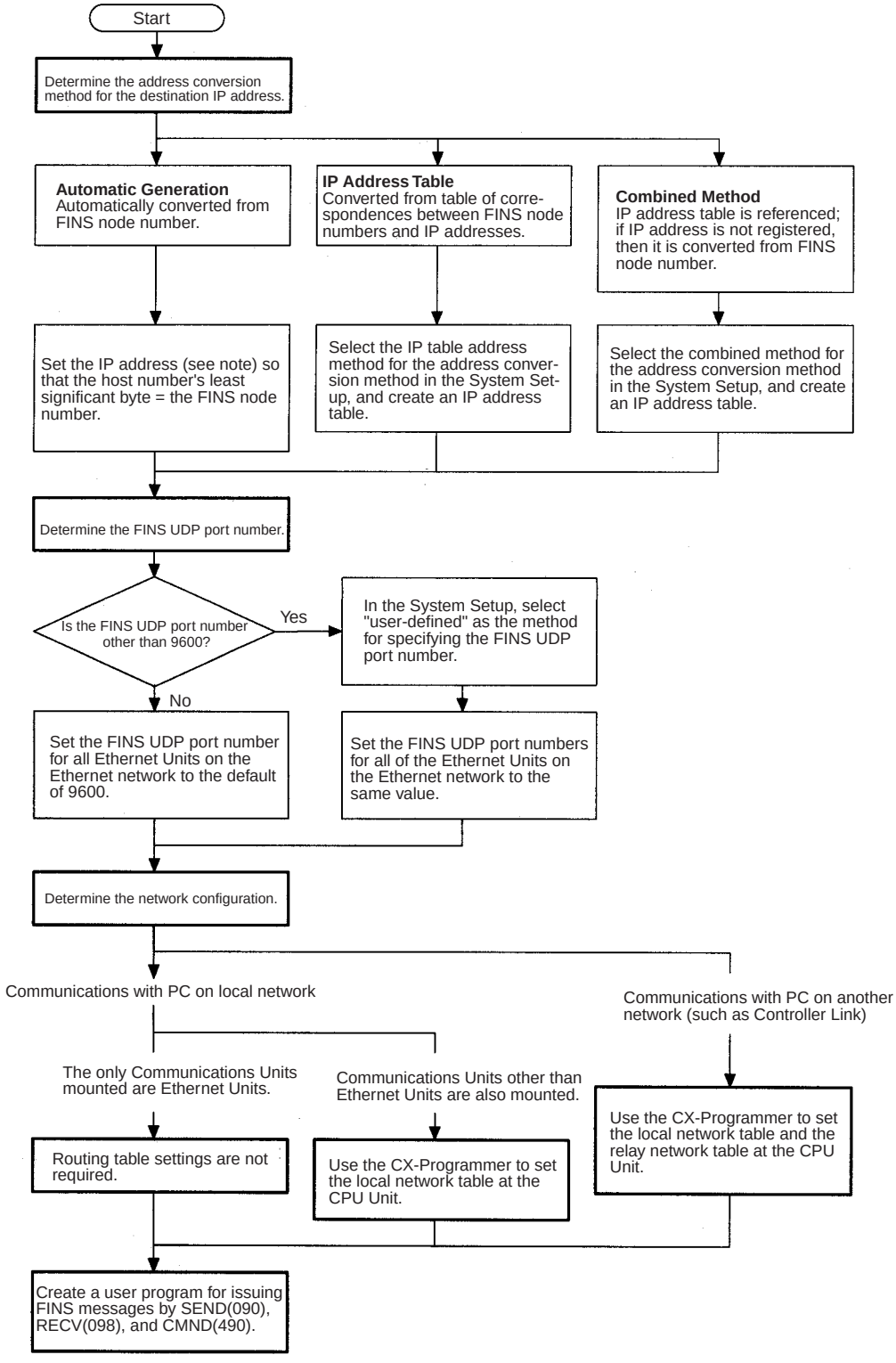

Note The location of the local IP address setting depends on the type of CPU Unit in the following way.

CS Series: Rotary switches on back of Ethernet Unit.
CJ Series: CPU Bus Unit System Setup or allocated words in the DM Area.

5-3 Sending Commands From a PC

FINS commands can be sent from the user's ladder-diagram program in the PC by using the SEND(090), RECV(098), and CMND(490) instructions.

SEND(090): Writes I/O data from the local node to another node.
RECV(098): Reads I/O data from another node to the local node.
CMND(490): Issues FINS commands for controlling operations such as sending and receiving I/O memory data to and from other nodes, reading information regarding other nodes, and so on.

5-3-1 Communications Specifications

The following table shows the specifications for PC communications using the SEND(090), RECV(098), and CMND(490) instructions.

Item	Specifications
Destination	1:1 SEND(090), RECV(098), CMND(490) instructions 1:N SEND(090), CMND(490) instructions (broadcasting)
Data length	SEND(090): 990 words (1,980 bytes) max.; broadcasting: 727 words (1,454 bytes) RECV(098): 990 words (1,980 bytes) max. CMND(490): 1,990 bytes max.; broadcasting: 1,462 bytes (after FINS command code)
Data contents	The following data is sent and received with the execution of each instruction. SEND(090): Sends request for remote node to receive data, and receives response data. RECV(098): Sends request for remote node to send data, and receives response data. CMND(490): Sends any FINS command and receives response data.
Communications port number	Ports 0 to 7 (Eight transmissions can occur simultaneously.)
Response monitor time	0000: 2 s (default) 0001 to FFFF: 0.1 to 6,553.5 s in 0.1-s increments (specified by user)
Number of retries	0 to 15 retries

Note
1. The maximum data length is limited to 512 bytes for data exchange between the PC and SYSMAC LINK Systems or the PC and SYSMAC BUS/2 Remote I/O Systems.
2. When broadcasting, do not require a response.

PC Communications Data Areas

The following table shows the I/O data areas involved when SEND(090) and RECV(098) are used.

Area	Range
CIO Area	CIO 0000 to CIO 6143
Work Area	W000 to W511
Holding Area	H000 to H511
Auxiliary Area	A000 to A959 (See note 1.)
Timer Area	TIM0000 to 4095
Counter Area	CNT0000 to 4095
DM Area	D00000 to D32767
EM Area	E00000 to E32767 (See note 2.)

Note
1. Data cannot be written to words A000 to A447 in the Auxiliary Area.
2. A maximum of 13 banks in the EM Area can be used. For details regarding the EM Area, refer to the operation manual for the PC that is used.

Using SEND(090), RECV(098), and CMND(490)

Make the settings shown below when using the SEND(090), RECV(098), and CMND(490) instructions in the user's ladder-diagram program in the PC.

SEND(090)

The SEND(090) instruction sends the data in n number of words, starting from the beginning word S at the local node, to the words starting from the beginning word D at the remote destination node (node number N).

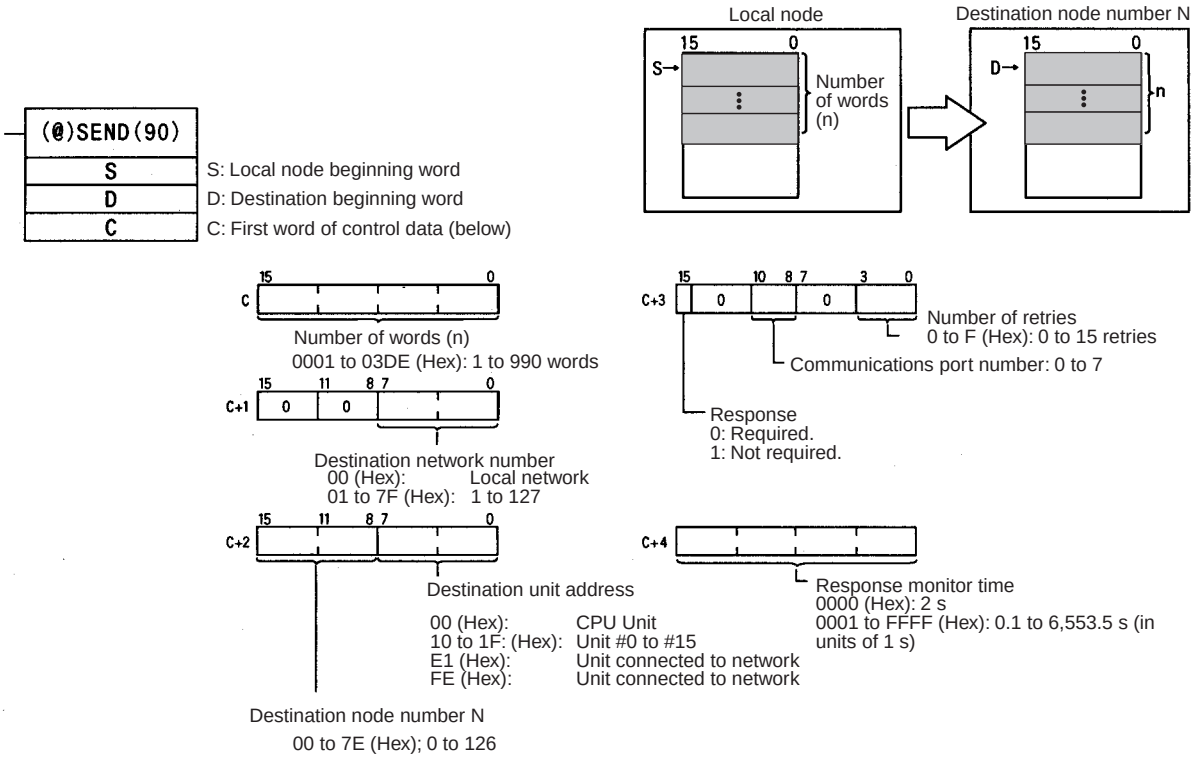

Note The message service does not guarantee that a message will reach the destination node. A message may be lost during transmission due to factors such as noise. To prevent this from occurring when using message services, it is common to set up retry processing at the node from which instructions are issued. With the SEND(090), RECV(098), and CMND(490) instructions, retry processing is executed automatically by specifying the number of retries, so specify a number other than 0.

RECV(098)

With the RECV(098) instruction, the data in m number of words, starting from the beginning word S at the remote node (node number M) is received at the words starting from the beginning word D at the local node.

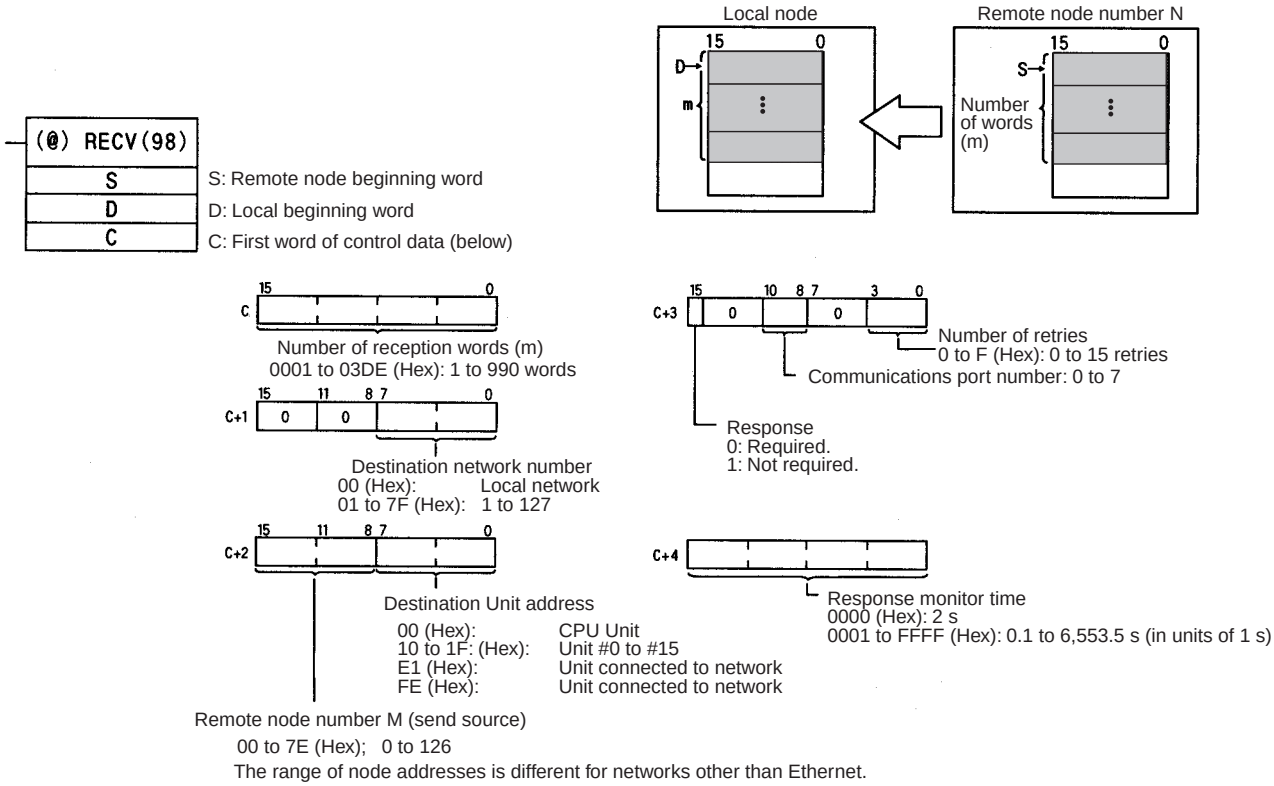

Note The message services function does not guarantee that a message will reach the destination node. A message may be lost during transmission due to factors such as noise. In order to prevent this from occurring when using message services, it is common to set up retry processing at the node from which instructions are issued. With the SEND(090), RECV(098), and CMND(490) instructions, retry processing is executed automatically by specifying the number of retries, so specify a number other than 0.

CMND(049)

The CMND(049) instruction sends n bytes of command data, starting from the beginning word S at the local node, to the node at node number N. the data in m number of words, starting from the beginning word S at the remote node (node number M) is received at the words starting from the beginning word D at the local node.

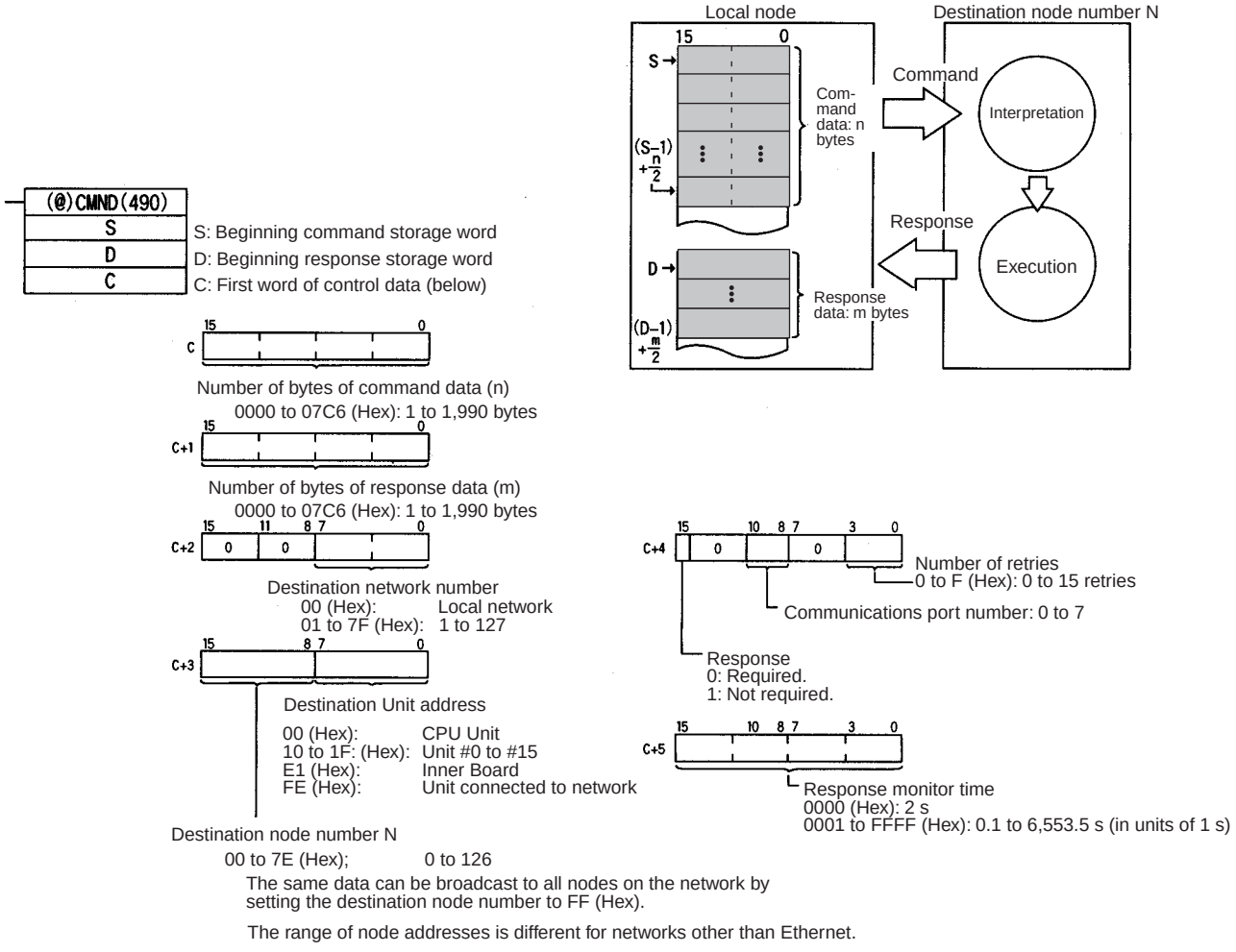

Note The message services function does not guarantee that a message will reach the destination node. A message may be lost during transmission due to factors such as noise. In order to prevent this from occurring when using message services, it is common to set up retry processing at the node from which instructions are issued. With the SEND(090), RECV(098), and CMND(490) instructions, retry processing is executed automatically by specifying the number of retries, so specify a number other than 0.

Commands Addressed to CS/CJ-series CPU Units

The following table provides a list of FINS commands that can be processed by a CS/CJ-series CPU Unit. For details, refer to the *CS/CJ-series Programmable Controllers Communications Commands Reference Manual* (W342).

For details on FINS commands that can be processed by the Ethernet Unit, refer to *Section 11 FINS Commands Addressed to Ethernet Units*.

Usage	Command code		Name	Function
	MR	SR		
I/O memory area access	01	01	MEMORY AREA READ	Reads the contents of consecutive I/O memory area words.
	01	02	MEMORY AREA WRITE	Writes the contents of consecutive I/O memory area words.
	01	03	MEMORY AREA FILL	Writes the same data to the specified range of I/O memory area words.
	01	04	MULTIPLE MEMORY AREA READ	Reads the contents of specified non-consecutive I/O memory area words.
	01	05	MEMORY AREA TRANSFER	Copies the contents of consecutive I/O memory area words to another I/O memory area.
Parameter area access	02	01	PARAMETER AREA READ	Reads the contents of consecutive parameter area words.
	02	02	PARAMETER AREA WRITE	Writes the contents of consecutive parameter area words.
	02	03	PARAMETER AREA FILL (CLEAR)	Writes the same data to the specified range of parameter area words.
Program area access	03	06	PROGRAM AREA READ	Reads the UM (User Memory) area.
	03	07	PROGRAM AREA WRITE	Writes to the UM (User Memory) area.
	03	08	PROGRAM AREA CLEAR	Clears the UM (User Memory) area.
Operating mode changes	04	01	RUN	Changes the CPU Unit's operating mode to RUN or MONITOR.
	04	02	STOP	Changes the CPU Unit's operating mode to PROGRAM.
Machine configuration reading	05	01	CPU UNIT DATA READ	Reads CPU Unit data.
	05	02	CONNECTION DATA READ	Reads the model numbers of the device corresponding to addresses.
Status reading	06	01	CPU UNIT STATUS READ	Reads the status of the CPU Unit.
	06	20	CYCLE TIME READ	Reads the maximum, minimum, and average cycle time.
Time data access	07	01	CLOCK READ	Reads the present year, month, date, minute, second, and day of the week.
	07	02	CLOCK WRITE	Changes the present year, month, date, minute, second, or day of the week.
Message display	09	20	MESSAGE READ/CLEAR	Reads and clears messages, and reads FAL/FALS messages.
Access rights	0C	01	ACCESS RIGHT ACQUIRE	Acquires the access right as long as no other device holds it.
	0C	02	ACCESS RIGHT FORCED ACQUIRE	Acquires the access right even if another device already holds it.
	0C	03	ACCESS RIGHT RELEASE	Releases the access right that has been acquired.
Error log	21	01	ERROR CLEAR	Clears errors or error messages.
	21	02	ERROR LOG READ	Reads the error log.
	21	03	ERROR LOG POINTER CLEAR	Clears the error log pointer.

Usage	Command code		Name	Function
	MR	SR		
File memory	22	01	FILE NAME READ	Reads file memory data.
	22	02	SINGLE FILE READ	Reads a specified length of file data from a specified position within a single file.
	22	03	SINGLE FILE WRITE	Writes a specified length of file data from a specified position within a single file.
	22	04	FILE MEMORY FORMAT	Formats (initializes) the file memory.
	22	05	FILE DELETE	Deletes specified files stored in the file memory.
	22	07	FILE COPY	Copies files from one file memory to another file memory in the same system.
	22	08	FILE NAME CHANGE	Changes a file name.
	22	0A	MEMORY AREA–FILE TRANSFER	Transfers or compares data between the I/O memory area and the file memory.
	22	0B	PARAMETER AREA–FILE TRANSFER	Transfers or compares data between the parameter area and the file memory.
	22	0C	PROGRAM AREA–FILE TRANSFER	Transfers or compares data between the UM (User Memory) area and the file memory.
	22	15	CREATE/DELETE DIRECTORY	Creates or deletes a directory.
Debugging	23	01	FORCED SET/RESET	Force-sets or force-resets bits, or releases force-set status.
	23	02	FORCED SET/RESET CANCEL	Cancels all bits that have been force-set or force-reset.

Writing Programs

Programs incorporating the SEND(090), RECV(098), and CMND(490) instructions are generally created using the Communications Port Enabled Flag and the Communications Port Error Flag as input conditions. CS/CJ-series CPU Units have eight communications ports. Only one instruction can be executed at any given port at one time, however, so the program must not overlap the use of any of the ports. A program example is provided below.

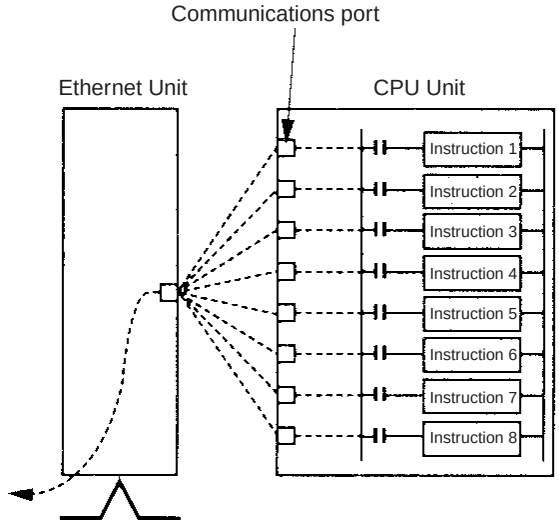

There are eight communications ports, so up to eight communications instructions can be executed at a time. The number of messages that can be sent or received with a single CPU Bus Unit service, though, is not more than two each for the CPU Unit to the Ethernet Unit and for the Ethernet Unit to the CPU Unit.

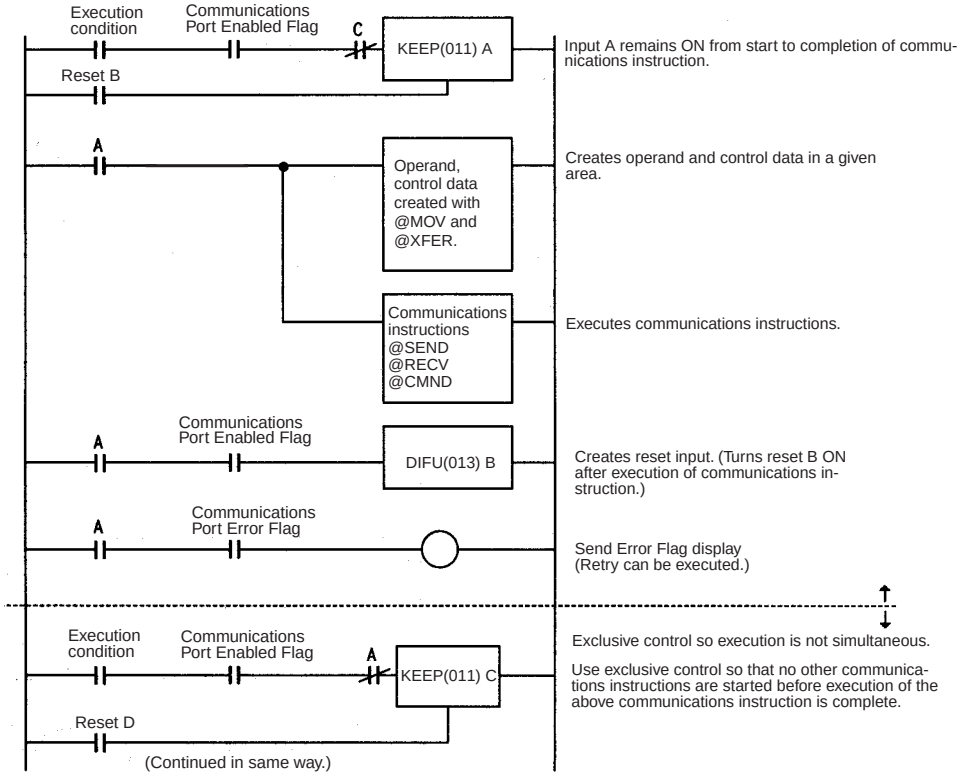

Communications Flags

The execution status of the SEND(090), RECV(098), and CMND(490) instructions is always reflected by the communications flags (i.e., the Communications Port Enabled Flag and the Communications Port Error Flag). The CS/CJ-series CPU Unit's communications flags are allocated in the Auxiliary Area as shown in the following table.

Flag name	Address		Contents
	Word	Bits	
Communications Port Enabled Flag	A202	Bit 7: Port 7 Bit 6: Port 6 Bit 5: Port 5 Bit 4: Port 4 Bit 3: Port 3 Bit 2: Port 2 Bit 1: Port 1 Bit 0: Port 0	OFF: Execution enabled (being executed) ON: Execution disabled (not being executed)
Communications Port Error Flag	A219	Bit 7: Port 7 Bit 6: Port 6 Bit 5: Port 5 Bit 4: Port 4 Bit 3: Port 3 Bit 2: Port 2 Bit 1: Port 1 Bit 0: Port 0	OFF: Normal completion ON: Abnormal completion

Note With CS/CJ-series PCs, communications ports 0 to 7 are also used for executing the PCMR(260) (PROTOCOL MACRO) instruction, so these flags are used in common for SEND(090), RECV(098), CMND(490), and PCMR(260). While PCMR(260) is being executed, SEND(090), RECV(098), and CMND(490) cannot be executed at the same communications port.

Communications Port Completion Codes

The status of a SEND(090), RECV(098), and CMND(490) instruction after execution is reflected as a communications port completion code, in one word (two bytes) of data as shown in the following table. (The value is 0000 during instruction execution.) The recorded status is saved until execution of the next instruction.

Word	Contents
A203	Communications Port 0 Completion Code
A204	Communications Port 1 Completion Code
A205	Communications Port 2 Completion Code
A206	Communications Port 3 Completion Code
A207	Communications Port 4 Completion Code
A208	Communications Port 5 Completion Code
A209	Communications Port 6 Completion Code
A210	Communications Port 7 Completion Code

The meanings of the communications port completion codes are the same as those for FINS commands and responses. When CMND(490) is used, however, even if a FINS command has an abnormal completion, it will not be reflected in the communications port completion code. For details, refer to *Communications Port Error Flag and Completion Codes for CMND(490)* below.

Bits 08 to 15 in the communications port completion code correspond to the first byte of the response code, and bits 00 to 07 correspond to the second byte. For details, refer to *10-6 Troubleshooting with Response Codes*.

Communications Port Error Flag and Completion Codes CMND(490)

Errors that occur when CMND(490) is used generate a Communications Port Error Flag and are recorded in a communications port completion code only in the following cases:

- When a response timeout error has occurred.
- When the number of communications data bytes exceeds the maximum value for the Unit (i.e., 2,000 bytes for the Ethernet Unit).
- When the actual number of response bytes is greater than the number of reception bytes that has been set. (The response is not stored in this case.)

Errors other than these are recorded in the response codes of the responses stored from the beginning response storage word onwards. Be careful of these, because there are no Communications Port Error Flags and they are not recorded in a communications port completion code.

Timing of Communications Flag Changes

- The Communications Port Enabled Flag remains OFF during communications and turns ON when they are completed (regardless of whether or not an error occurs).
- The Communications Port Error Flag retains its status until the next transmission or reception.
- The Communications Port Error Flag turns OFF with the execution of the next communications instruction even if there was an abnormal completion.

Example

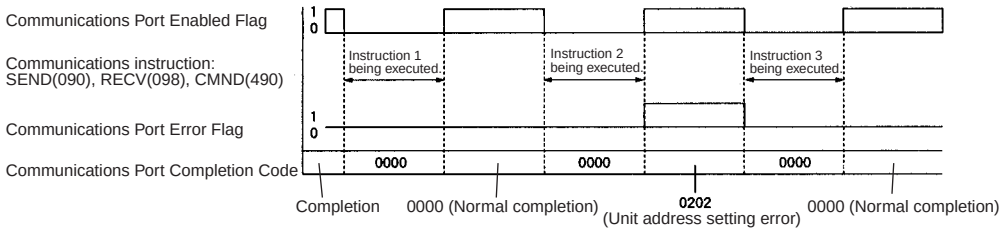

5-3-2 Program Example

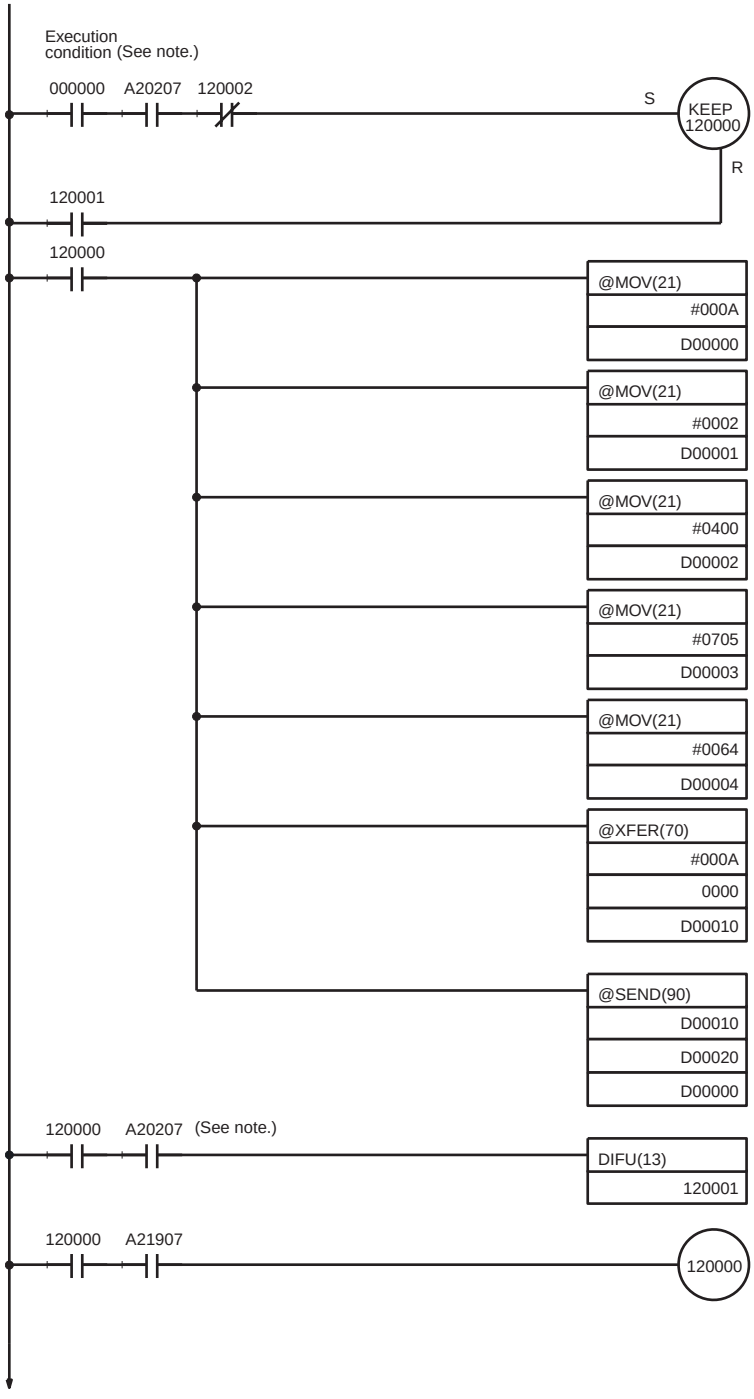

When the Communications Port Enabled Flag for port 7 is ON, and RECV(098) is not being executed, the send execution program will start when execution condition CIO 000000 turns ON.

Input CIO 120000 remains ON from the start of SEND(090) execution until completion.

Control Data Creation

Word	Contents		Meaning
D0000	00	0A	Number of send words = 10
D0001	00	02	Destination network number = 2
D0002	04	00	Destination node number = 4 Destination unit address = 0
D0003	07	05	Response required. Communications port No. used = 7 Number of retries = 5
D0004	00	64	Response monitor time = 10 s

Send Data Creation

Ten words of data from word CIO 0000 is stored from D00010 onwards.

Ten words of data from D00010 at the local node is sent to D00020 onwards at network number 2, node number 4, unit address 0 (the PC).

Reset Input Creation

Send Error Display

(Continued on next page.)

(Continued from previous page.)

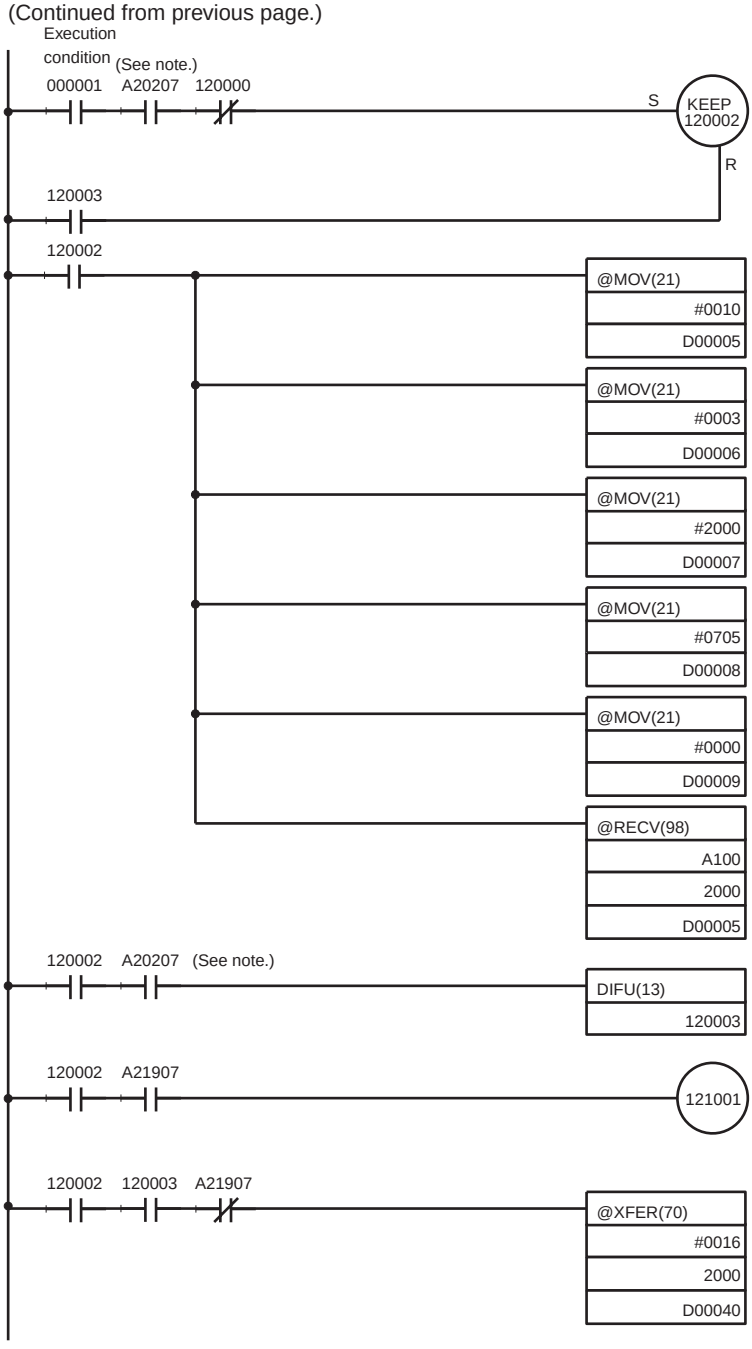

When the Communications Port Enabled Flag for port 7 is ON, and SEND(090) is not being executed, the transmission execution program will start when execution condition CIO 000001 turns ON.

Input CIO 120002 remains ON from the start of RECV(098) execution until completion.

Control Data Creation

Word	Contents		Meaning
D0005	00	10	Number of reception words = 16
D0006	00	03	Source network number = 3
D0007	20	00	Source node number = 32 Source unit address = 0
D0008	07	05	Response required. Communications port No. used = 7 Number of retries = 5
D0009	00	00	Response monitor time = Default

A total of 16 words of data beginning from word A100 at network number 3, node number 32, unit address 0 (the PC) is received at word CIO 2000 onwards of the local node.

Reset Input Creation

Reception Error Display

Reception Data Processing

If there is no reception processing completion error, the 16 words of data received from word CIO 2000 onwards is stored at D00040 onwards.

Note With CS/CJ-series PCs, the Communications Port Enabled Flags at bits 0 to 7 in word A202 turn OFF even when the PCMR(260) instruction is being executed using the ports corresponding to those flags.

5-3-3 Transmission Delays

The methods of computing the maximum time required from execution of the SEND(090), RECV(098), and CMND(490) instructions until processing is completed are described in this section. These times, however, do not take transmission delay times on the network into account, so they may be increased depending on the conditions under which the instructions are executed.

SEND(090)

The transmission delay for the SEND(090) instruction can be calculated using the following equation, which is illustrated in the following diagram.

Max. delay = Local node service cycle + local node service processing time + transmission processing time + reception processing time + remote node service cycle + remote node service processing time + CPU data set processing time (remote node)

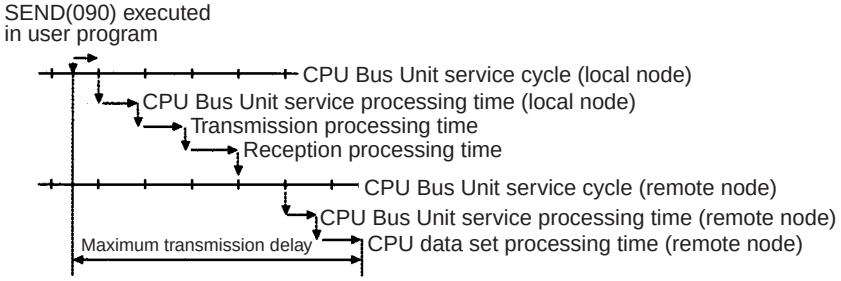

CPU Bus Unit Service Cycle

The CPU Bus Unit service cycle is a single PC cycle.

CPU Bus Unit Service Processing Time

This is the time required to process CPU Bus Units and is approximately 1 ms for Ethernet Units.

Transmission Processing Time

Number of words transferred x 0.011 + 3 ms

Reception Processing Time

Number of words transferred x 0.011 + 3 ms

CPU Data Set Processing Time

Number of words transferred x 0.02 + 20 ms

Note

1. The actual operating environment can cause transmission delays larger than those calculated with the methods given here. Among the causes of longer delays are the following: traffic on the network, window sizes at network nodes, traffic through the Ethernet Unit (e.g., socket servicing, FTP server communications, etc.), and the system configuration.
2. The CPU data set processing time is the standard when the peripheral service time is set in the CPU Unit System Setup to the default of 4%. As this value is increased, the processing time is shortened.

Example Calculations

The following example shows calculations for sending 256 words between two PC nodes using SEND(090). The local node's CPU cycle time is 10 ms, and the remote node's CPU cycle time is 5 ms. Calculations are shown in the following table.

Item	Calculation
CPU Bus Unit service cycle (local node)	PC cycle time = 10 ms
CPU Bus Unit service processing time (local node)	1 ms
Transmission processing time	256 x 0.011 + 3 = 5.816 ≅ 6 ms
Reception processing time	256 x 0.011 + 3 = 5.816 ≅ 6 ms
CPU Bus Unit service cycle (remote node)	5 ms
CPU Bus Unit service processing time (remote node)	1 ms
CPU data set processing time (remote node)	256 x 0.02 + 20 = 25.12 ≅ 25 ms
Total	10 + 1 +6 + 6 + 5 + 1 + 25= **54 ms**

RECV(098)

The transmission delay for the RECV(098) instruction can be calculated using the following equation, which is illustrated in the following diagram.

Max. delay = Local node service cycle + local node service processing time + transmission processing time (command) + reception processing time (command) + remote node service cycle + remote node service processing time + CPU data read processing time (remote node) + remote node service processing time + transmission processing time (response) + reception processing time (response) + local node service cycle + local node service processing time + CPU data set processing time (local node)

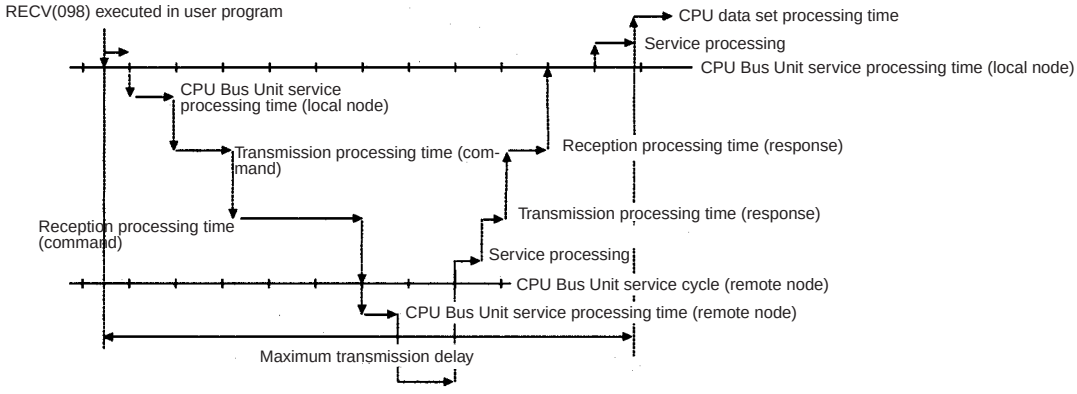

CPU Bus Unit Service Cycle

The CPU Bus Unit service cycle is a single PC cycle.

CPU Bus Unit Service Processing Time

This is the time required to process CPU Bus Units and is approximately 1 ms for Ethernet Units.

Transmission and Reception Processing Times

Command: 3 ms
Response: Number of words transferred x 0.011 + 3 ms

CPU Data Read Processing Time

The CPU data read processing time is the integer portion of the minimum cycle time, which satisfies the following formula.

Number of words transferred x 0.02 + 20 ms ≤ Integer portion of remote node cycle time

CPU Data Set Processing Time

Number of words transferred x 0.02 + 20 ms

Example Calculations

The following example shows calculations for receiving 256 words between two PC nodes using RECV(098). The local node's CPU cycle time is 10 ms, and the remote node's CPU cycle time is 15 ms. Calculations are shown in the following table.

Item	Calculation
CPU Bus Unit service cycle (local node)	PC cycle time = 10 ms
CPU Bus Unit service processing time (local node)	1 ms
Transmission processing time (command)	3 ms
Reception processing time (command) + Remote node service cycle + CPU Bus Unit service processing time (remote node)	3 + 15 + 1 = 19 ms
CPU data read processing time (remote node)	256 x 0.02 + 20 = 25.12 → 30 ms
Service processing	1 ms
Transmission processing time (response)	256 x 0.011 + 3 = 5.816 ≅ 6 ms
Reception processing time (response) + Local node service cycle + CPU Bus Unit service processing time (local node)	(256 x 0.011 + 3) + 10 + 1 = 16.816 ≅ 17 ms
CPU data set processing (local node)	256 x 0.02 + 20 = 25.12 ≅ 25 ms
Total	10 + 1 + 3 + 19 + 30 + 1 + 6 + 17 + 25 = **112 ms**

5-4 Sending Commands From a Host Computer

Commands and responses sent from host computers must be in the formats described in this section and must provide the proper FINS header information. These formats can also be used to decode commands and responses received from other network nodes.

5-4-1 Designating Remote Addresses

UDP sockets are used when sending FINS commands from a host computer to a PC. This section provides examples of addressing remote PCs from the host computer for communications.

Note

1. The FINS UDP port number at the Ethernet Unit is set to the default of 9600. It can be changed in the CPU Bus Unit System Setup, but the same FINS UDP port number must be set for all of the Ethernet Units on the same Ethernet network.
2. Even if the Ethernet network is comprised of multiple segments, set the same value for the FINS network number.

Example 1: Intranetwork Addressing

In this example, the host computer and the remote node (Ethernet Unit) are on the same network. The communications parameters specified from the host computer would be as follows:

Destination IP Address: 196.36.32.100 (Ethernet Unit of remote node)
UDP port number: FINS UDP port No. (Ethernet Unit of remote node)
FINS addresses (Remote node CPU Unit):
Network number: 1
Node number: 100
Unit number: 0
FINS addresses (Host computer):
Network number: 1
Node number: 50
Unit number: 0

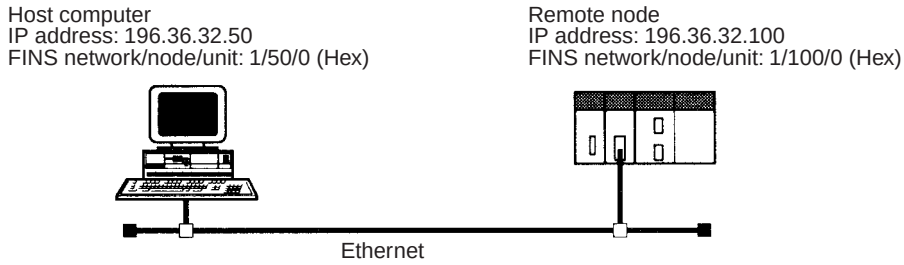

Example 2: Internetwork Addressing

In this example, the host computer and the remote node (Ethernet Unit) are on different networks, connected by a relay node. The communications parameters specified from the host computer would be as follows:

Destination IP Address: 196.36.32.100 (Ethernet Unit of relay node)
UDP port number: FINS UDP port number (Ethernet Unit of relay node)
FINS addresses (Remote node CPU Unit):
Network number: 2
Node number: 1
Unit number: 0
FINS addresses (Host computer):
Network number: 1
Node number: 50
Unit number: 0

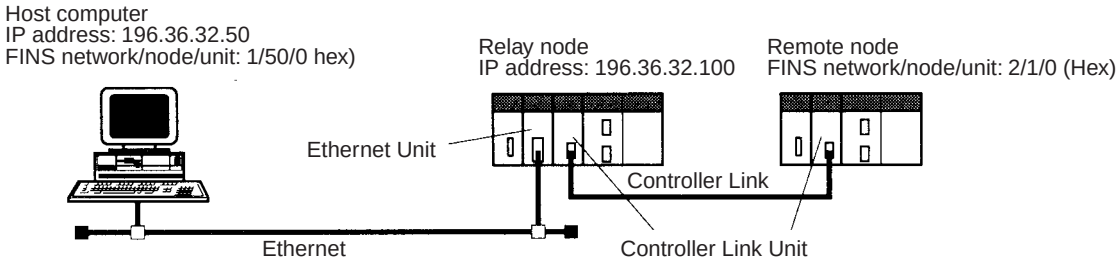

5-4-2 FINS Frames

The FINS communications service is carried out through the exchange of FINS command frames and their corresponding response frames. (There are also commands with no responses.)

Both command frames and response frames are comprised of a FINS header for storing transfer control information, a FINS command field for storing a command, and a FINS parameter/data field for storing command parameters and transmission/response data.

FINS Command Frame Configuration

		Size (bytes)	Contents
FINS header	ICF	1	Displays frame information
	RSV	1	Reserved by system.
	GCT	1	Permissible number of gateways
	DNA	1	Destination network address
	DA1	1	Destination node address
	DA2	1	Destination unit address
	SNA	1	Source network address
	SA1	1	Source node address
	SA2	1	Source unit address
	SID	1	Service ID
FINS command	MRC	1	Main request code
	SRC	1	Sub-request code
FINS parameter/data	Parameter/ data field	2000 max.	Command parameters and send data The data length depends on the MRC and SRC.

FINS Response Frame Configuration

The response code (one byte each for MRES and SRES) for the command is added at the beginning of the FINS parameter/data field in the response frame.

		Size (bytes)	Contents
	FINS header	10	Same as in command frame.
	FINS command	2	Same as in command frame.
FINS parameter/data field	MRES	1	Main response code
	SRES	1	Sub-response code
	Data	1998 max.	Response data There are some frames in which the data length is 0.

FINS Header Information

ICF (Information Control Field)

Bit	7	6	5	4	3	2	1	0
	1		0	0	0	0	0	

Response Request Bit
(0: Response required; 1: Response not required)

Kind of data (0: command; 1: response)

RSV (Reserved by system)

Set to 00 (Hex).

GCT (Permissible Number of Gateways)

Set to 02 (Hex).

DNA (Destination Network Address)

Specifies the number of the network where the destination node is located.
00 (Hex): Local network
01 to 7F (Hex): Destination network number (1 to 127)

DA1 (Destination Node Address)

Specifies the number of the node where the command is being sent. This node number is the address used for FINS, and is different from the IP ad-

dress used for Ethernet.
00 (Hex): Local PC Unit
01 to 7E (Hex): Destination node number (1 to 126)
FF (Hex): Broadcasting

When multiple Communications Units are mounted, DA1 specifies the node number of the Unit connected to the network specified by DNA.

DA2 (Destination Unit Address)

Specifies the number of the Unit at the destination node.
00 (Hex): PC (CPU Unit)
10 to 1F (Hex): CPU Bus Unit #0 to #15 (16 to 31)
E1 (Hex): Inner Board
FE (Hex): Unit connected to network.

SNA (Source Network Address)

Specifies the number of the network where the source node is located.
00 (Hex): Local network
01 to 7F (Hex): Source network number (1 to 127)

SA1 (Source Node Address)

Specifies the local node number. The ranges of numbers that can be specified are the same as for DA1.

SA2 (Source Node Address)
Specifies the number of the Unit at the source node. The ranges of numbers that can be specified are the same as for DA2.

SID (Service ID)
The SID is used to identify the process that data is sent from. Set any desired number from 00 to FF for the SID. The same number will be returned in the response, allowing you to match commands and responses in your application.

5-4-3 Sample Program

Operation Overview

This program reads 150 words of the PC memory beginning at D00100 by sending an FINS command (MEMORY AREA READ, command code 0101) from a UNIX workstation to the PC on the Ethernet network. If no response is received within two seconds of sending the FINS command, the command will be resent.

Settings

The Ethernet Unit IP address is 196.36.32.100, and the FINS node number is 100. IP address conversion is set to automatic generation.

The workstation's IP address is 196.36.32.50 and its FINS node number is 50.

The FINS UDP port number is 9600 (default).

Sample Program

```
 1   #include <errno.h>
 2   #include <stdio.h>
 3   #include <sys/types.h>
 4   #include <sys/socket.h>
 5   #include <netinet/in.h>
 6   #include <signal.h>
 7
 8   #define FINS_UDP_PORT 9600
 9   #define SERV_IP_ADDR "196.36.32.100"      /*Ethernet Unit IP ADDRESS*/
10   #define MAX_MSG      2010
11   #define RESP_TIMEOUT 2
12
13
```

```
14   /*
15   *  FINS COMMUNICATIONS SAMPLE PROGRAM
16   */
17   main(argc,argv)
18   int   argc;
19   char  *argv[];
20   {
21         int    sockfd;
22         struct sockaddr_in ws_addr,cs_addr;
23         char   fins_cmnd[MAX_MSG],fins_resp[MAX_MSG];
24         int    sendlen,recvlen,addrlen;
25         char   sid=0;
26         extern recv_fail();
27
28         /*GENERATE UDP SOCKET*/
29         if((sockfd=socket(AF_INET,SOCK_DGRAM,0))<<0)
30              err_exit("can't open datagram socket");
31
32         /*ALLOCATE IP ADDRESS AND PORT # TO SOCKET*/
33         bzero((char*)&ws_addr,sizeof(ws_addr));
34         ws_addr.sin_family=AF_INET;
35         ws_addr.sin_addr.s_addr=htonl(INADDR_ANY);
36         ws_addr.sin_port=htons(FINS_UDP_PORT);
37         if(bind(sockfd,(struct sockaddr*)&ws_addr,sizeof(ws_addr))<0)
38              err_exit("can't bind local address");
39
40         /*
41         *GENERATE MEMORY AREA READ COMMAND
42         *(READ 150 WORDS FROM D00100.)
43         /*
44         fins_cmnd[0]=0x80;  /*ICF*/
45         fins_cmnd[1]=0x00;  /*RSV*/
46         fins_cmnd[2]=0x02;  /*GCT*/
47         fins_cmnd[3]=0x01;  /*DNA*/
48         fins_cmnd[4]=0x64;  /*DA1*/      /*Ethernet Unit FINS NODE NUMBER*/
49         fins_cmnd[5]=0x00;  /*DA2*/
50         fins_cmnd[6]=0x01;  /*SNA*/
51         fins_cmnd[7]=0x32;  /*SA1*/      /*WS FINS NODE NUMBER*/
52         fins_cmnd[8]=0x00;  /*SA2*/
53         fins_cmnd[9]=++sid; /*SID*/
54         fins_cmnd[10]=0x01; /*MRC*/
55         fins_cmnd[11]=0x01; /*SRC*/
56         fins_cmnd[12]=0x82; /*VARIABLE TYPE: DM*/
57         fins_cmnd[13]=0x00; /*READ START ADDRESS:  100*/
58         fins_cmnd[14]=0x64;
59         fins_cmnd[15]=0x00;
60         fins_cmnd[16]=0x00; /*WORDS READ: 150*/
61         fins_cmnd[17]=0x96;
62
63
64         /*SEND FINS COMMAND*/
65         bzero((char*)&cs_addr,sizeof(cs_addr));
66         cs_addr.sin_family=AF_INET;
67         cs_addr.sin_addr.s_addr=inet_addr(SERV_IP_ADDR);
68         cs_addr.sin_port=htons(FINS_UDP_PORT);
69
70         signal(SIGALRM,recv_fail);
71
72   CMND_SEND:
73         sendlen = 18;
74         if(sendto(sockfd,fins_cmnd,sendlen,0,&cs_addr,sizeof(cs_addr))
           ==sendlen){
75               alarm(RESP_TIMEOUT); /*START RESPONSE MONITOR TIMER*/
76               printf("send length %d¥n",sendlen);
```

```
77          {
78          else{
79                err_exit(”send error”);
80          }
81
82          /*RECEIVE FINS RESPONSE*/
83          addrlen = sizeof(cs_addr);
84          if((recvlen = recvfrom(sockfd,fins_resp,MAX_MSG,0,&cs_addr,&addrlen))
            <0){
85                if(errno == EINTR)
86                      goto CMND_SEND; /*RE-SEND FINS COMMAND*/
87                err_exit(”receive error”);
88          }
89          else{
90                alarm(0); /*STOP RESPONSE MONITOR TIMER*/
91                printf(”recv length %d¥n”,recvlen);
92                if(recvlen<14) /*ILLEGAL RESPONSE LENGTH CHECK*/
93                      err_exit(”FINS length error”);
94                if((fins_cmnd[3]!=fins_resp[6])||(fins_cmnd[4]!=fins_resp[7])
95                      ||(fins_cmnd[5]!=fins_resp[8])){ /
*DESTINATION ADDRESS CHECK*/
96                      err_exit(”illegal source address error”);
97                }
98                if(fins_cmnd[9]!=fins_resp[9]) /*SID CHECK*/
99                      err_exit(”illegal SID error”);
100         }
101
102
103         /*CLOSE SOCKET*/
104         close(sockfd);
105   }
106   /*
107   *ERROR PROCESSING FUNCTIONS
108   */
109   err_exit(err_msg)
110   char   *err_msg;
111   {
112         printf(”client: %s %x¥n”,err_msg,errno);
113         exit(1);
114   }
115
116   /*
117   *SIGNAL CAPTURE FUNCTIONS
118   */
119   recv_fail()
120   {
121         printf(”response timeout error ¥n”);
122   }
```

5-4-4 Delays for Accessing PC Memory

The time for the response to be received after a remote node on the Ethernet network sends a memory area read or write command to a PC can be calculated using the following formula. This time does not take network transmission delays into account, so it may be extended under some operating conditions.

Write command delay time (ms) =
Remote node communications processing time + 4 + (0.011 x number of words written) + CPU cycle time + CPU data set processing time (Refer to page 96)

Read command delay time (ms) =
Remote node communications processing time + 8 + (0.011 x number of

words read) + CPU cycle time + CPU data read processing time (Refer to page 96)

Note

1. The transfer time may exceed the calculated value due to the actual operating environment. Factors affecting the transfer time are network traffic, the window size of each node, Ethernet Unit traffic (e.g., socket services, FTP server communications, etc.), and the system configuration.
2. The CPU data set processing time is the standard when the peripheral service time is set in the CPU Unit System Setup to the default of 4%. As this value is increased, the processing time is shortened.

Example

This example shows the calculations for a host computer sending a write command for 256 words to the PC. The standard for the maximum transfer delay time is as follows when the PC's CPU cycle time is 10 ms.

Maximum transfer delay time
= Host computer communications processing time + 4 + (0.011 x 256) + 10 + (256 x 0.02 + 20) = host computer communications processing time + 42 ms

5-5 FINS Server

The following table shows the FINS commands that can be addressed to the Ethernet Units. The Ethernet Units automatically send res*ponses for these commands. For details, refer to Section 11 FINS Commands Addressed to Ethernet Units*.

MRC	SRC	Name
04	03	RESET
05	01	CONTROLLER DATA READ
06	01	CONTROLLER STATUS READ
08	01	INTERNODE ECHO TEST
	02	BROADCAST TEST RESULTS READ
	03	BROADCAST DATA SEND
21	02	ERROR LOG READ
	03	ERROR LOG CLEAR
27	01	UDP OPEN REQUEST
	02	UDP RECEIVE REQUEST
	03	UDP SEND REQUEST
	04	UDP CLOSE REQUEST
	10	PASSIVE TCP OPEN REQUEST
	11	ACTIVE TCP OPEN REQUEST
	12	TCP RECEIVE REQUEST
	13	TCP SEND REQUEST
	14	TCP CLOSE REQUEST
	20	PING
	50	IP ADDRESS TABLE WRITE
	57	IP ADDRESS WRITE (CJ Series only)
	60	IP ADDRESS TABLE READ
	61	IP ROUTER TABLE READ
	62	PROTOCOL STATUS READ
	63	MEMORY STATUS READ
	64	SOCKET STATUS READ
	65	ADDRESS INFORMATION READ
	67	IP ADDRESS READ (CJ Series only)

SECTION 6
Socket Services

This section describes the functionality provided by the Ethernet Unit via the socket services.

6-1 Overview 104
- 6-1-1 Socket Service Functions 104
- 6-1-2 Sockets 105
- 6-1-3 Using Sockets with the Ethernet Unit. 105
- 6-1-4 Socket Port Numbers 105
- 6-1-5 Differences between TCP and UDP 106
- 6-1-6 Opening TCP Sockets. 107
- 6-1-7 Fragmentation of Send Data 108
- 6-1-8 Maximum Transmission Delays 110
- 6-1-9 Precautions in Using Socket Services. 111

6-2 Using Socket Services with Socket Service Request Switches 112
- 6-2-1 Socket Service Parameters 114
- 6-2-2 Response Codes 117
- 6-2-3 Socket Service Request Switches 122
- 6-2-4 UDP/TCP Socket Status 125
- 6-2-5 Application Procedure 126
- 6-2-6 Socket Services and Socket Status 127
- 6-2-7 Timing Charts 128
- 6-2-8 TCP/IP Communications Programming Example 130
- 6-2-9 UDP/IP Communications Programming Example 134

6-3 Using Socket Services with CMND(490) 139
- 6-3-1 UDP/TCP Socket Status 140
- 6-3-2 Socket Services and Socket Status 143
- 6-3-3 Communications Timing Chart 144
- 6-3-4 Socket Service Timing Chart 144
- 6-3-5 TCP/IP Communications Programming Example 146
- 6-3-6 UDP/IP Communications Programming Example 153

6-1 Overview

6-1-1 Socket Service Functions

The socket services allow devices on the Ethernet to send and receive various data using the UDP or TCP protocol. The socket services can be used by CS/CJ-series PCs through the user program by manipulating dedicated bits (called Socket Service Request Switches) or by executing the CMND(490) instruction.

The two methods of using the socket services are as follows:

- Dedicated Bits (Socket Service Request Switches)
  Requests can be made to a socket service by setting parameters and then merely manipulating specific Socket Service Request Switches.
- CMND(490)
  Requests can be made to a socket service by sending service request commands to the Ethernet Unit.

Note One of the main differences between using Socket Service Request Switches and using CMND(490) is in the number of sockets that can be connected simultaneously, as shown in the following table.

Protocol	Socket Service Request Switches	CMND(490)
UDP	Total of 8 sockets max.	8 sockets max.
TCP		8 sockets max.

Using Socket Service Request Switches

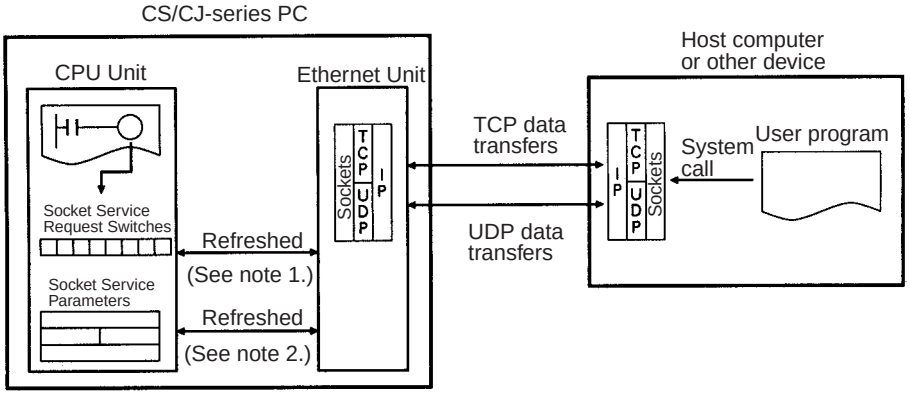

Note
1. Socket Service Request Switches in the CPU Bus Area in the CIO Area are used to send a service request from the CPU Unit to the Ethernet Unit.
2. The Socket Service Parameters in the CPU Bus Unit Area in the DM Area are used to specify the service being requested from the Ethernet Unit. The CPU Bus Unit Area in the DM Area is also used to receive results of processing from the Ethernet Unit to the CPU Unit.

Using CMND(490)

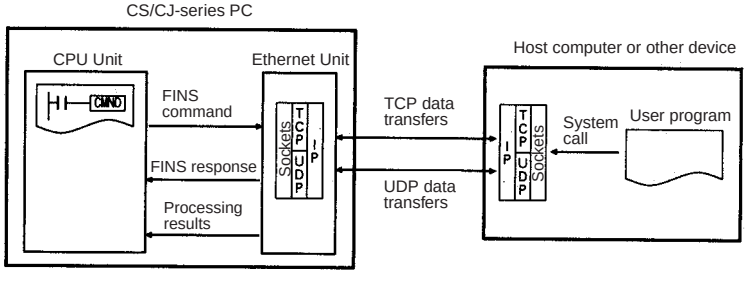

Specific Socket Service Functions

The socket service functions listed in the following table can be executed either using Socket Service Request Switches or using CMND(490).

Protocol	Socket service request
UDP	Open UDP socket
	Receive via UDP socket
	Send via UDP socket
	Close UDP socket
TCP	Open TCP socket, passive
	Open TCP socket, active
	Receive via TCP socket
	Send via TCP socket
	Close TCP socket

6-1-2 Sockets

Sockets are interfaces that allow TCP and UDP protocols to be used directly from the user program. With personal computers, socket are provided as C language interface libraries, which allow TCP or UDP protocols to be programming using library functions. With UNIX computers, socket interfaces are supported in the form of system calls.

The CS/CJ-series PCs support the socket service from the user program. The user program requests service functions either by manipulating Socket Service Request Switches in the CPU Bus Unit Area in the CIO Area or by sending FINS commands to the Ethernet Unit by executing CMND(490) instruction in the ladder diagram.

Socket communications services can be used to transfer arbitrary data between a PC and a host computer or between two PCs. The Ethernet supports two socket services: a UDP socket service and a TCP socket service. Refer to *2-1-3 Selecting Communications Services* for a comparison of the socket services and the FINS communications service.

6-1-3 Using Sockets with the Ethernet Unit

The Ethernet Unit supports up to 16 simultaneous socket connections for the socket services, 8 each for UDP and TCP sockets. Socket numbers 1 to 8 are assigned to sockets for both UDP and TCP sockets. Sockets are managed from the ladder-diagram program by assigning a socket port for each socket number. The socket port number is assigned when the socket is opened.

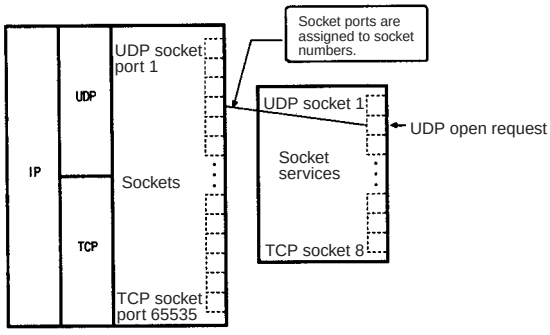

6-1-4 Socket Port Numbers

Port numbers up to 1023 on a UNIX workstation can be used by the superuser only. Port numbers 0 to 255 are reserved for well-known ports. Conse-

quently, port numbers 1024 and above should be used for socket services. The Ethernet Unit does not support port #0.

Some port numbers over 1024 may be reserved on some workstations (for example, the X-window server is port #6000). Do not use port numbers that are already reserved for other processes.

The setting status of the UNIX workstation port numbers can be checked in /etc/services.

6-1-5 Differences between TCP and UDP

There are differences in the socket services between TCP and UDP.

TCP Communications

The following procedure is followed each time data is transmitted to ensure that the data arrives normally at the remote node:

1,2,3...

1. The remote node returns ACK when data is received normally.
2. The local node sends the next data after it receives ACK, or it resends the same data if ACK is not returned within the specified time.

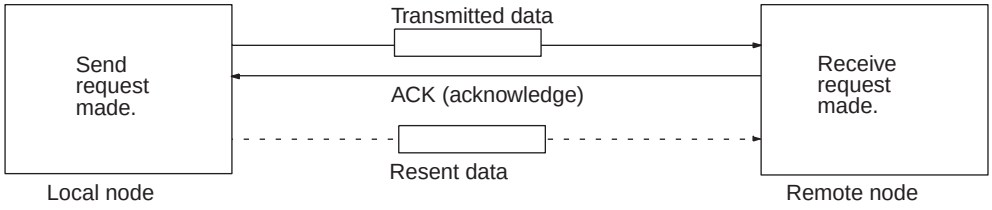

With the TCP protocol, the remote IP address and remote TCP port number are specified when an open request is made for a socket. When a send request is made, the number of bytes to send and the send data are specified. When a receive request is made, the number of bytes to receive is specified.

With the TCP protocol, communications with another remote device are not possible until the socket that was opened has been closed.

UDP Communications

Data is simply sent to the remote. Unlike TCP, the reception of data is not checked and data is not resent. To increase communication reliability, data resends must be programmed by the user in user application.

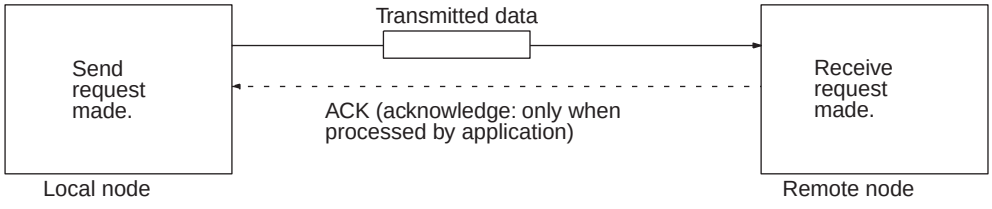

With the UDP protocol, the remote IP address and remote TCP port number are not specified when an open request is made for a socket. When a send request is made, the remote IP address, the remote TCP port number, the number of bytes to send, and the send data are specified. When a receive request is made, the number of bytes to receive is specified. (In addition to the received data, the source IP address and source UDP port number are stored in the response data).

With the UDP protocol, communications with another remote device are possible even if the socket that was opened is not closed.

6-1-6 Opening TCP Sockets

To achieve highly reliable data communications, TCP establishes a virtual communications circuit between the two nodes before starting data transmissions. The virtual communications circuit is known as a “connection.”

Passive OPEN and Active OPEN

An open command is executed for a node to establish a connection. The open method differs depending on whether the node is a client or server. A passive open method is used to open the node as a server and the active open method is used to open the node as a client.

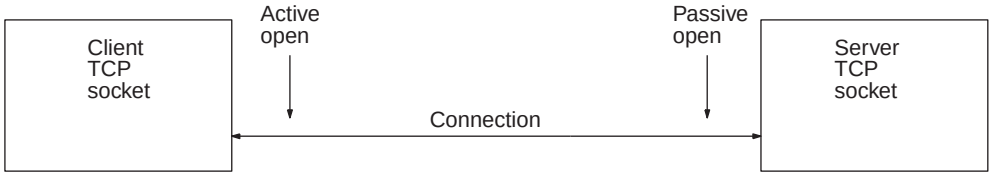

Note

1. TCP sockets must be closed once a connection has been made before communications are possible with other TCP sockets. This is true for other server and client sockets. Up to eight TCP sockets can be open simultaneously.
2. With UDP sockets, communications are possible with more than one other UDP socket even without closing the connection.
3. When a connection is made between two nodes, the process at the node providing a service is called the server, and the process at the node requesting the service is called the client. The server is started first and waits for a service request from a client. The client requests to the server that a connection be opened and then transmits data. When the TCP protocol is used, however, the client–server relationship does not need to be programmed in the application because it is automatically handled by the protocol.

TCP Communications Procedure

The communications procedure is shown below for communications between a host computer and Ethernet Unit using a TCP socket. In this example, the host computer is the server and the Ethernet Unit is the client.

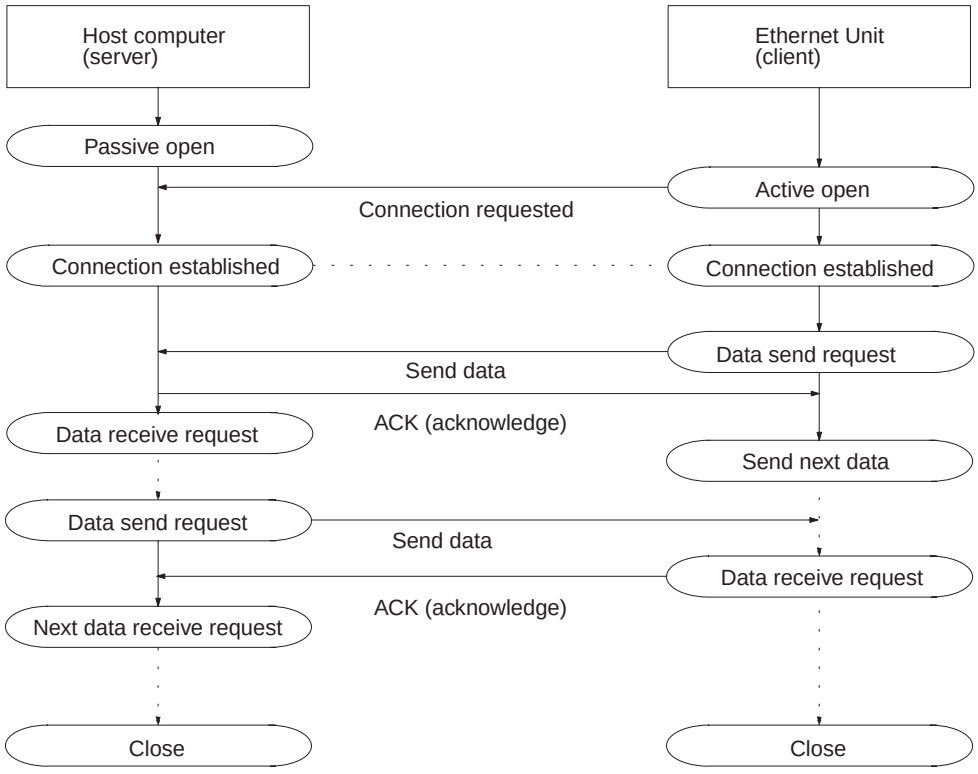

6-1-7 Fragmentation of Send Data

The Ethernet Unit fragments data for TCP transmission into units of 1,024 bytes and data for UDP transmission into units of 1,472 bytes. TCP requires one reception request to receive each unit of data. UDP, however, restores the original data before passing it to the user process, allowing all the data in a single transmission to be received with one reception request.

Cautions when Using TCP

An example of the fragmentation and transmission of data using the TCP is shown in the following illustration.

1,2,3...

1. The sending user program sends a request to send 1,984 bytes of data.
2. The Ethernet Unit fragments the send data into Data A with 1,024 bytes and Data B with 960 bytes.
3. Data A and Data B are sent consecutively.
4. The receiving user program sends a request to receive 1,984 bytes of data. However, only data A is sent in the first packet, and data B is not received.
5. Another receive request to receive data must be made before the remaining data, Data B, is received.

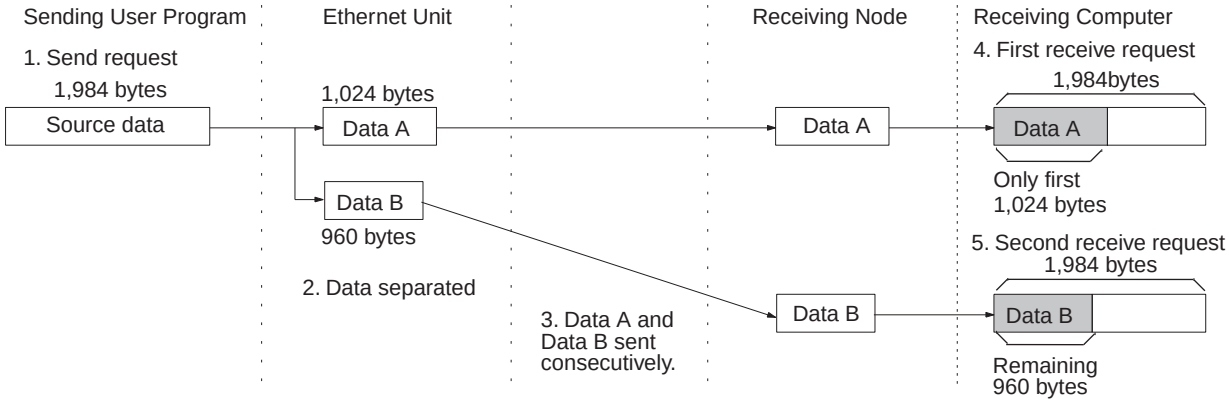

When using TCP protocol, the fragmented data is passed to the user program. Therefore, the receiving user program must be able to evaluate the end of the data transmission, and repeatedly send receive requests until all data has been received. The receive request is sent twice in the example shown above, but the data would be even more fragmented if a router was included in the communications path, and the number of receive requests would need to be increased accordingly.

When making the receive request, it is not necessary to specify the same data length as the sent data length. For example, if the length setting is shorter than the actual length of the data, all the data can be received by repeating the receive requests.

Note If communications are with a different segment and data is sent via the TCP protocol, data will be fragmented into units of 536 bytes.

Cautions when Using UDP

An example of fragmentation and transmission of data using the UDP is shown in the following illustration.

1,2,3...

1. The transmission user program sends a request to send 1,984 bytes of data.
2. The Ethernet Unit fragments the send data into Data A with 1,472 bytes and Data B with 512 bytes.
3. Data A and Data B are sent consecutively.
4. When the receiving user program sends a request to receive 1,984 bytes of data, Data A and Data B are linked to restore the original data, which is passed to the user program.

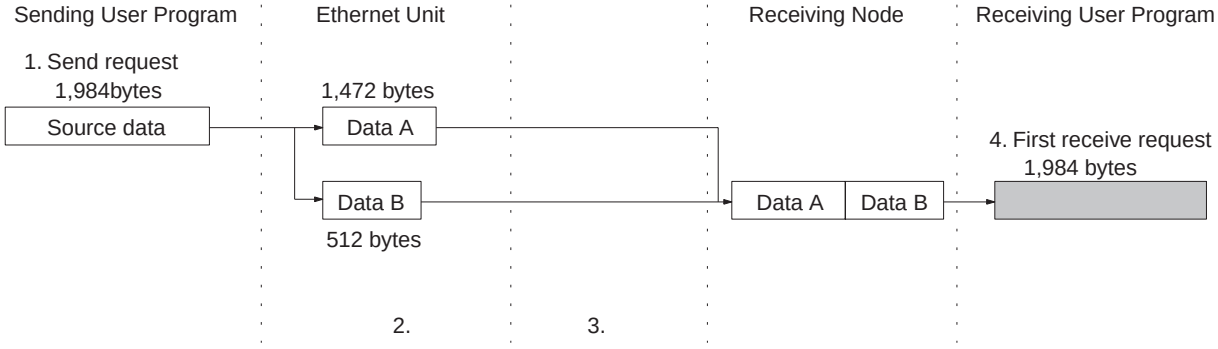

As shown above, the UDP protocol handles data communications as datagrams, so that the send data is restored to the original data before being passed to the user program. Consequently, if the data length in the receive request is set to the length of the send data, the entire data can be received using a single receive data request. However, if the data length in the receive

data request is set smaller than the actual length of the data, all received data exceeding the set data length will be discarded.

6-1-8 Maximum Transmission Delays

The transmission delays for socket service is calculated as the sum of the communications processing times for both nodes.

Transmission delay = Remote node send processing time + Local node receive processing time + Local node send processing time + Remote node receive processing time

Calculate the maximum Ethernet Unit transmission delays for sending and receiving using the following formulas. These times are the same for both UDP and TCP.

Note The delay times calculated here ignore delays that can occur on the Ethernet network. Actual delays can be much longer depending on actual conditions on the network.

Delay Time for Socket Service using Socket Service Request Switches = Send processing time = receive processing time = PC cycle time x 5 + A x 2 + B (ms)

Delay Time for Socket Service using CMND(490)= Send processing time = receive processing time = PC cycle time x 14 + A (ms)

A is the lowest multiple of the PC cycle time that is greater than or equal to 20 ms.

B is the lowest multiple of the PC cycle time that is greater than or equal to 20 ms + 0.01 x number of send/receive bytes.

Note

1. The formulas above calculate guideline figures for the transfer delays when the Ethernet Unit uses a single socket only. The user program execution time is not included in these calculations.
2. The communications time for the remote node varies according to the equipment used. If the remote node is not an Ethernet Unit, refer to the documentation for the actual equipment to calculate the communications time.
3. The delay times may exceed the calculated values due to the operating environment. Factors affecting the delay times are the network load ratio (amount of network traffic), the window size of each node, the load on the Ethernet Unit (including operating multiple socket services, FTP server, etc.), and the system configuration.
4. The values for A and B given above are guideline values for when the peripheral service time in the PC Setup in the CPU Unit is set to the default value of 4%. If the peripheral service time setting is increased, the values of A and B will decrease.

Example

The following table shows calculation of the approximate maximum transfer delay for sending 512 bytes of data between two PCs using CMND(490) for a TCP socket.

Local PC cycle time: 5 ms

Remote PC cycle time: 10 ms

Item	Formula
Local receive processing time	5 x 5 + 20 x 2 + 30 = 95 ms
Local send processing time	5 x 5 + 20 x 2 + 30 = 95 ms

Item	Formula
Remote send processing time	10 x 5 + 20 x 2 + 30 = 120 ms
Remote receive processing time	10 x 5 + 20 x 2 + 30 = 120 ms
Maximum transmission delay	95 + 95 + 120 + 120 = **430 ms**

6-1-9 Precautions in Using Socket Services

UDP and TCP Socket Services

- If a short response monitor time is specified in CMND(490) control data and the Ethernet Unit is operating under a high load, a result may be stored even if the response code indicates a time-out. If this occurs, increase the monitor time specified with CMND(490).
- The socket status area in the CIO Area is zeroed when the PC's operating mode is changed (e.g., from PROGRAM to RUN). The actual Ethernet Unit socket status, however, will remain unchanged after the socket status area is zeroed. To avoid this problem, use the IOM Hold setting in the PC Setup. Refer to the PC's operation manuals for details on settings.
- The Results Storage Error Flag will turn ON in the socket status to indicate that the specified Results Storage Area does not exist in the PC. Correct the user program.
- Communications time may increase if multiple Ethernet Unit functions are used simultaneously or due to the contents of the user program.
- Communications efficiency may decrease due to high communications loads on the network.
- All data is flushed from the socket's communications buffer when a socket is closed with the CLOSE REQUEST command. In some cases, the transmit data for the SEND REQUEST command issued just before the socket was closed may not be sent.
- When sockets are open, the Ethernet Unit provides a 4,096-byte buffer for each TCP socket and 9,016-byte buffer for each UDP socket to allow data to be received at any time. These buffers are shared by all open sockets. Receive data will be discarded for a socket if the buffer becomes full. The user application must therefore issue RECEIVE REQUEST commands frequently enough to prevent the internal buffers from becoming full.

UDP Socket Service

- The UDP socket sets a broadcast address for the remote node address to broadcast data to all nodes of the network simultaneously. The maximum length of broadcast data is 1,472 bytes. Data in multiple fragments (over 1,473 bytes for a UDP socket) cannot be broadcast.
- The UDP socket does not check the transmitted data to ensure communications reliability. To increase communication reliability, communications checks and retries must be included in the user application program.

TCP Socket Service

- If the TCP socket of the remote node closes (the connection is broken) during communications, the TCP socket at the local node must also be closed. The communications Results Storage Area can be used to check if the connection has been broken. Close the local socket immediately after detecting that the remote TCP socket has closed. The following situations indicate that the remote socket has closed.

  TCP Receive Results Storage Area:
  Response code = 004B (error at remote node)

  TCP Send Results Storage Area:
  Response code = 0020 (connection broken with remote socket during transmission)

- Data can remain in a buffer at the local node if the remote TCP socket closes during communications. Any data remaining in the buffer will be discarded when the TCP socket is closed. To avoid problems of this nature, steps will have to be taken in the application program, such as sending data to enable closing, and then only closing once reception of this data has been confirmed.
- When closing a connection for a TCP socket, the first port to be closed cannot be reopened for at least 60 seconds after the other port closes. However, this restriction does not apply for a port opened using the TCP ACTIVE OPEN REQUEST command with a local TCP port number of 0 (port number automatically assigned) which is closed from the side that actively opened the socket.
- A connection is established for a passively opened socket by actively opening it from another socket. You cannot actively open multiple connections to a socket passively opened at the Ethernet Unit.
- The Ethernet Unit TCP sockets have no KEEP ALIVE function to check that the connection is normal if communications do not occur for a set time period through a communications line for which a connection has been established. The Ethernet Unit's TCP sockets make no checks to the socket at the other node. Checks made by the remote node, however, are received as responses, so that it is not necessary for the user program to consider the KEEP ALIVE function.

Precautions in Using Socket Service Request Switches

- Send and reception processing can not be performed at the same time when Socket Service Request Switches are used for socket services because there is only one Socket Service Parameter Area for each socket. For example, if the Send Request Switch is turned ON when data is being received, the response code will be 110C Hex, indicating that a Request Switch was turned ON during communications processing. (The response code for the reception will overwrite this code when processing has been completed.)
- If more than one Request Switch is turned ON simultaneously, the response code will be 110C Hex and all requested processing will end in an error.
- Close processing can be performed, however, even during open, send, or receive processing. This enables emergency close processing. Also, the only parameter required for close processing is the socket number, so a socket can be closed even when parameters are set for another process.

6-2 Using Socket Services with Socket Service Request Switches

Socket services can be used by setting the parameters in a Socket Service Parameter Area in the CPU Bus Unit Area and then turning ON a Socket Service Request Switch.

When using Socket Service Request Switches, a maximum of 8 sockets can be opened simultaneously for the UDP and TCP combined. Also, the same socket number cannot be used simultaneously for both UDP and TCP. (There is only one Socket Service Parameter Area for each socket, i.e., the same area must be used for both UDP and TCP.)

An illustration of using Socket Service Request Switches to execute socket services is provided below.

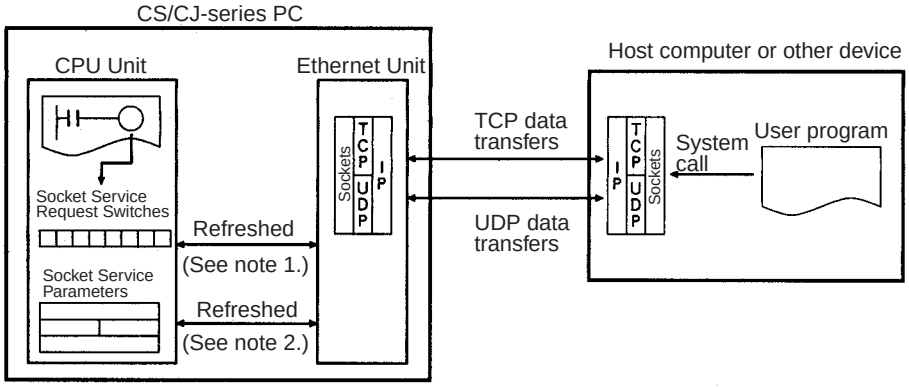

Note

1. Socket Service Request Switches in the CPU Bus Unit Area in the CIO Area are used to send a service request from the CPU Unit to the Ethernet Unit.
2. The Socket Service Parameters in the CPU Bus Unit Area in the DM Area are used to specify the service being requested from the Ethernet Unit. The CPU Bus Unit Area in the DM Area is also used to receive results of processing from the Ethernet Unit to the CPU Unit.

After setting the required parameters in a Socket Service Parameter Area in the CPU Bus Unit Area in the DM Area, the Socket Service Request Switches can be used to request opening, sending, receiving, or closing for either the UDP or TCP protocol. When requesting a send, send data at the send/receive data addresses set in the parameter area is sent. When requesting a reception, data is received to the send/receive data addresses set in the parameter area.

6-2-1 Socket Service Parameters

The Socket Service Parameter Areas in which parameters are set to request socket services is in the CPU Bus Unit Area in the DM Area of the CPU Unit. The Socket Service Parameter Areas are allocated as shown in the following diagrams. The first word of in the DM Area allocated to the Ethernet Unit as a CPU Bus Unit is referred to as “m” and is computed as follows:

m = D30000 + (100 x unit number)

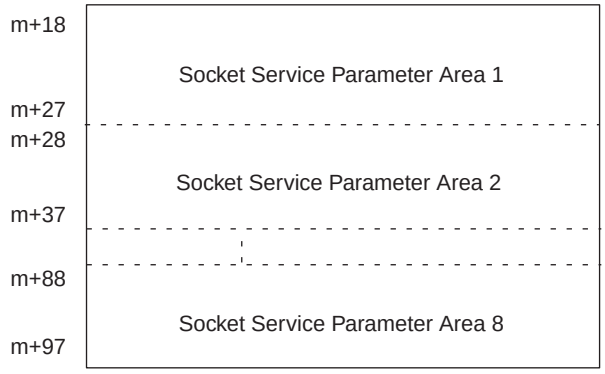

The configuration of each of the Socket Service Parameter Areas is shown in the following diagram.

Offset	15 14 13 12 11 10 9 8 7 6 5 4 3 2 1 0
+0	UDP/TCP socket number (0001 to 0008 Hex)
+1	Local UDP/TCP port number (0000 to FFFF Hex)
+2	Remote IP address (00000000 to FFFFFFFF Hex)
+3	
+4	Remote UDP/TCP port number (0000 to FFFF Hex)
+5	Number of bytes to send/receive (0000 to 07C0 Hex)
+6	Send/receive data address
+7	
+8	Timeout value (0000 to FFFF Hex)
+9	Response code

Parameter Settings

The following table shows the parameters that are required for each service and the use of the parameters by the socket service.

UDP Socket Services

Parameter	No. of words	Range (decimal values in parentheses)	Socket service			
			UDP open	UDP receive	UDP send	UDP close
UDP/TCP socket No.	1	0001 to 0008 Hex (1 to 8)	W	W	W	W
Local UDP/TCP port No.	1	0000 to FFFF Hex (0 to 65,535)	W	---	---	---
Remote IP address	2	00000000 to FFFFFFFF Hex (0.0.0.0 to 255.255.255.255)	---	R	W	---
Remote UDP/TCP port No.	1	0000 to FFFF Hex (0 to 65,535)	---	R	W	---
Number of bytes to send/receive	1	0000 to 07C0 Hex (0 to 1,984 bytes)	---	RW	RW	---
Send/Receive data address	2	Memory area address	---	W	W	---
Time out time	1	0000 to FFFF Hex (0 to 65,535) (0: No limit, 0.1 to 6,553.5 s)	---	W	---	---
Response code	1	---	R	R	R	R

Note W: Written by user.
RW: Written by user at execution and then read for results at completion
R: Read by user for results at completion
---: Not used.

TCP Socket Services

Parameter	No. of words	Range (decimal values in parentheses)	Socket service				
			TCP passive open	TCP active open	TCP receive	TCP send	TCP close
UDP/TCP socket No.	1	0001 to 0008 Hex (1 to 8)	W	W	W	W	W
Local UDP/TCP port No.	1	0000 to FFFF Hex (0 to 65,535)	W	RW	---	---	---
Remote IP address	2	00000000 to FFFFFFFF Hex (0.0.0.0 to 255.255.255.255	RW	W	---	---	---
Remote UDP/TCP port No.	1	0000 to FFFF Hex (0 to 65,535)	RW	W	---	---	---
Number of bytes to send/ receive	1	0000 to 07C0 Hex (0 to 1,984 bytes)	---	---	RW	RW	---
Send/Receive data address	2	Memory area address	---	---	W	W	---
Time out time	1	0000 to FFFF Hex (0 to 65,535) (0: No limit, 0.1 to 6,553.5 s)	W	---	W	---	---
Response code	1	---	R	R	R	R	R

Note W: Written by user.
RW: Written by user at execution and then read for results at completion
R: Read by user for results at completion
---: Not used.

UDP/TCP Socket No.

Specify the number of the UDP or TCP socket to open.

Local UDP/TCP Port No.

Specify the number of the UDP or TCP port for the socket to use for communications.

- Do not specify the port being used as the FINS UDP port (default: 9600) in an open request for a UDP socket.
- Do not specify FTP server TCP port numbers 20 and 21 in an open request for a TCP port.
- Do not specify mail communications TCP port number 25.
- As a rule, use port numbers 1,024 and higher.

If port number 0 is specified when for an active TCP open, the TCP port number will be automatically allocated and the number of the port that was opened will be stored in the local UDP/TCP port number in the Socket Service Parameter Area (i.e., the actual port number will be overwritten on the value of 0 set by the user).

Remote IP Address

Specify the IP address of the remote device.

- Offset +2 in the Socket Service Parameter Area contains the upper bytes of the Remote IP Address, and offset +3 contains the lower bytes.
  Example: The contents of offsets +2 and +3 would be as shown below when
  the Remote IP Address is 196.36.32.55 (C4.24.20.37 Hex).
  +2: C424
  +3: 2037
- This parameter is not used when making a receive request for a UDP socket. The remote IP address will be stored with the response data and will be written as the Remote IP Address in the Socket Service Parameter Area.
- When opening a passive TCP socket, the combination of the remote IP address and the remote TCP port number can be used to affect processing as shown in the following table.

Remote IP Address	Remote TCP Port No.	Processing
0	0	All connection requests accepted.
0	Not 0	Connection requests accepted only for the same port number.
Not 0	0	Connection requests accepted only for the same IP address.
Not 0	Not 0	Connection requests accepted only for the same port number and IP address.

If the Remote IP Address is set to 0, a connection can be made to any remote node and the remote IP address of the node that is connected will be stored as the Remote IP Address in the Socket Service Parameter Area. If a specific remote I/O address is set, then a connection can be made only to the node with the specified address.

If the Remote TCP Port No. is set to 0, a connection can be made to any remote node regardless of the TCP port number it is using. If a specific remote TCP port number is set, then a connection can be made only to a node using the specified TCP port number.

Remote UDP/TCP Port No.

Specify the UDP or TCP port number used by the remote device.

- This parameter is not used when making a receive request for a UDP socket. The remote UDP/TCP port number will be stored with the response data and will be written as the Remote UDP/TCP Port No. in the Socket Service Parameter Area.
- When opening a passive TCP socket, the combination of the remote IP address and the remote TCP port number can be used to affect processing as shown in the table for the Remote IP Address, above. If the Remote UDP/TCP Port No. is set to 0, the UDP/TCP port number of the remote device will be written as the Remote UDP/TCP Port No. in the Socket Service Parameter Area.

Time Out Time

Set the time limit in units of 0.1 s for completion of communications from the time that the Receive Request Switch (TCP or UDP) or the TCP Passive Open Request Switch is turned ON. A response code of 0080 Hex (timeout) will be stored if communications time out. If 0 is set, the requested service will not be timed.

Number of Bytes to Send/Receive

Send the number of bytes to be sent or the number of bytes to receive. When the transfer has been completed, the actual number of bytes that have been sent or received will be written here.

Send/Receive Data Address

Specify the address of the first word to send or the address of the first word where data is to be received. Always set the bit number to 00 Hex.

Offset	15 … 8	7 … 0
+6	Area designation	Leftmost 2 digits of word address
+7	Rightmost 2 digits of word address	Bit number (always 00 Hex)

The following specifications can be used.

Area		Word address	Area designation (Hex)	Word address (Hex)
CIO, HR, and AR Areas	CIO	0000 to 6143	B0	0000 to 17FF
	HR	H000 to H511	B2	0000 to 01FF
	AR	A448 to A959	B3	01C0 to 03BF
DM Area	DM	D00000 to D32767	82	0000 to 7FFF
EM Area	Bank 0	E0_00000 to E0_32767	A0	0000 to 7FFF
	:	:	:	:
	Bank C	EC_00000 to EC_32767	AC	0000 to 7FFF

6-2-2 Response Codes

When processing of a request has been completed for socket services executed using Socket Service Request Switches, a response code will be stored in the Response Code word in the Socket Service Parameter Area. The fol-

lowing response codes will be stored depending on the service that was requested.

UDP Socket Open Request

Response code	Meaning
0000	Normal end
0105	Local IP address setting error.
0302	CPU Unit error; cannot execute.
1100	UDP socket number is not 1 to 8 or local UDP port number is 0.
110C	Request Switch turned ON during other processing.
220F	Specified socket is already open.
2211	Unit is busy; cannot execute.
2606	Specified socket is already open as TCP socket; cannot open UDP socket.
2607	Specified Socket Service Parameter Area is already being used for another socket.
003E	Internal buffer cannot be obtained due to high reception traffic (ENOBUFS).
0049	The same UDP port number has been specified more than once (EADDRINUSE).
0081	The specified socket was closed during open processing.

UDP Socket Receive Request

Response code	Meaning
0000	Normal end
0302	CPU Unit error; cannot execute.
1100	Number of bytes to receive is not in allowable range.
1101	The area designation of the Send/Receive Data Address is not in allowable range.
1103	The bit number in the Send/Receive Data Address is not 00.
110C	Request Switch turned ON during other processing.
220F	Specified socket is already processing a receive request.
2210	The specified socket is not open.
2211	Unit is busy; cannot execute.
2607	Specified Socket Service Parameter Area is already being used for another socket.
003E	Internal buffer cannot be obtained due to high reception traffic (ENOBUFS).
0066	Internal memory cannot be obtained; cannot execute.
0080	Reception request timeout
0081	The specified socket was closed during receive processing.

UDP Socket Send Request

Response code	Meaning
0000	Normal end
0302	CPU Unit error; cannot execute.
1100	Number of bytes to send is not in allowable range or the remote IP address is 0.
1101	The area designation of the Send/Receive Data Address is not in allowable range.
1103	The bit number in the Send/Receive Data Address is not 00.

Response code	Meaning
110C	Request Switch turned ON during other processing.
220F	Specified socket is already processing a send request.
2210	The specified socket is not open.
2211	Unit is busy; cannot execute.
2607	Specified Socket Service Parameter Area is already being used for another socket.
003E	Internal buffer cannot be obtained due to high reception traffic (ENOBUFS).
0042	The remote IP address is a broadcast address and the number of bytes to send is greater than 1,472 bytes (EMSGSIZE).
004C	The network ID is incorrect or the remote IP address is incorrect (EADDRNOTAVAIL)
004E	The network ID is not in the IP router table, router settings are incorrect, or the remote IP address is incorrect (ENETUNREACH).
0051	The router settings are incorrect or the remote IP address is incorrect (EHOSTUNREACH).
0081	The specified socket was closed during send processing.

UDP Socket Close Request

Response code	Meaning
0000	Normal end
0302	CPU Unit error; cannot execute.
2210	The specified socket is not open.
2211	Unit is busy; cannot execute.
2607	Specified Socket Service Parameter Area is already being used for another socket.

TCP Socket Passive Open Request

Response code	Meaning
0000	Normal end
0105	Local IP address setting error.
0302	CPU Unit error; cannot execute.
1100	TCP socket number is not 1 to 8 or local TCP port number is 0.
110C	Request Switch turned ON during other processing.
220F	Specified socket is already open or already processing an open request.
2211	Unit is busy; cannot execute.
2606	Specified socket is already open as UDP socket; cannot open TCP socket.
2607	Specified Socket Service Parameter Area is already being used for another socket.
003E	Internal buffer cannot be obtained due to high reception traffic (ENOBUFS).
0042 (See note.)	The remote IP address is a broadcast address and the number of bytes to send is greater than 1,472 bytes (EMSGSIZE).
0045	Error in communications with remote node (ECONNABORTED).
0049	The same TCP port number has been specified more than once (EADDRINUSE).
004A (See note.)	Error (ECONNREFUSED).

Response code	Meaning
004B (See note.)	Error in communications with remote node (ECONNRESET).
004E (See note.)	Remote IP address parameter error (ENETUNREACH).
0051 (See note.)	Remote IP address parameter error (EHOSTUNREACH).
0053	Error in communications with remote node (ETIMEDOUT) or remote node does not exist.
0066	Internal memory cannot be obtained; cannot execute.
0080	Open request timed out.
0081	The specified socket was closed during open processing.
0082	Connection could not be established with specified remote node.

Note These response codes will be returned only on large, multilevel networks.

TCP Socket Active Open Request

Response code	Meaning
0000	Normal end
0105	Local IP address setting error.
0302	CPU Unit error; cannot execute.
1100	TCP socket number is not 1 to 8 or local TCP port number is 0.
110C	Request Switch turned ON during other processing.
220F	Specified socket is already open or already processing an open request.
2211	Unit is busy; cannot execute.
2606	Specified socket is already open as UDP socket; cannot open TCP socket.
2607	Specified Socket Service Parameter Area is already being used for another socket.
000D	Remote IP address parameter error (EACCES).
003E	Internal buffer cannot be obtained due to high reception traffic (ENOBUFS).
0042 (See note.)	Error (EMSGSIZE).
0044	ICMP data received (ENOPROTOOPT).
0045	Error in communications with remote node (ECONNABORTED).
0049	The same port number has been specified more than once (EADDRINUSE).
004A	Error (ECONNREFUSED) or the remote node has not been opened as passive socket.
004B (See note.)	Error in communications with remote node (ECONNRESET).
004C	Remote IP address parameter error (EADDRNOTAVAIL). Wrong parameter designation. An attempt was made to set the local TCP port of the local node to Active Open.
004E	Remote IP address parameter error (ENETUNREACH). The network ID is not in the IP router table or router settings are incorrect.
0051	Remote IP address parameter error (EHOSTUNREACH). The router settings are incorrect.

Response code	Meaning
0053	Communications error with remote node (ETIMEDOUT). No remote node.
0081	The specified socket was closed during open processing.

Note These response codes will be returned only on large, multilevel networks.

TCP Socket Receive Request

Response code	Meaning
0000	Normal end
0302	CPU Unit error; cannot execute.
1100	Number of receive bytes not in allowable range.
1101	The area designation of the Send/Receive Data Address is not in allowable range.
1103	The bit number in the Send/Receive Data Address is not 00.
110C	Request Switch turned ON during other processing.
2210	The specified socket is not open.
220F	Specified socket is already processing a receive request.
2210	Specified socket has not been connected.
2211	Unit is busy; cannot execute.
2607	Specified Socket Service Parameter Area is already being used for another socket.
003E	Internal buffer cannot be obtained due to high reception traffic (ENOBUFS).
0042 (See note.)	ICMP data received (EMSGSIZE).
0044 (See note.)	ICMP data received (ENOPROTOOPT).
0045 (See note.)	Error in communications with remote node (ECONNABORTED).
004B	Error in communications with remote node (ECONNRESET).
004E (See note.)	ICMP data received (ENETUNREACH).
004F (See note.)	ICMP data received (EHOSTDOWN).
0051 (See note.)	ICMP data received (EHOSTUNREACH).
0053	Error in communications with remote host (ETIMEDOUT).
0066	Internal memory cannot be obtained; cannot execute.
0080	Receive request timed out.
0081	The specified socket was closed during receive processing.

Note These response codes will be returned only on large, multilevel networks.

TCP Socket Send Request

Response code	Meaning
0000	Normal end
0302	CPU Unit error; cannot execute.
1100	Number of bytes to send not in allowable range.
1101	The area designation of the Send/Receive Data Address is not in allowable range.
1103	The bit number in the Send/Receive Data Address is not 00.

Response code	Meaning
110C	Request Switch turned ON during other processing.
220F	Specified socket is already processing a send request.
2210	The specified socket is not open.
2211	Unit is busy; cannot execute.
2607	Specified Socket Service Parameter Area is already being used for another socket.
0020	Connection with remote socket broken during send (EPIPE).
003E	Internal buffer cannot be obtained due to high reception traffic (ENOBUFS).
0042 (See note.)	The remote IP address is a broadcast address and the number of bytes to send is greater than 1,472 bytes (EMSGSIZE).
0044 (See note.)	ICMP data received (ENOPROTOOPT).
0045 (See note.)	Error in communications with remote node (ECONNABORTED).
004A (See note.)	Error in communications with remote node (ECONNREFUSED)
004B (See note.)	Error in communications with remote node (ECONNREFUSED)
004E (See note.)	Remote IP address parameter error (ENETUNREACH).
004F (See note.)	ICMP data received (EHOSTDOWN).
0051 (See note.)	Remote IP address parameter error (EHOSTUNREACH).
0053 (See note.)	Error in communications with remote node (ETIMEDOUT).
0081	The specified socket was closed during send processing.

Note These response codes will be returned only on large, multilevel networks.

TCP Socket Close Request

Response code	Meaning
0000	Normal end
2210	The specified socket is not open.
2211	Unit is busy; cannot execute.
2607	Specified Socket Service Parameter Area is already being used for another socket.
0302	CPU Unit error; cannot execute.

6-2-3 Socket Service Request Switches

Socket Service Request Switches are manipulated to request socket services. These bits are called Socket Service Request Switches, and are turned ON in the CPU Unit to request socket services through the Ethernet Unit.

The Socket Service Request Switches are allocated in the CPU Bus Unit Area in the CPU Area starting at the word n+ 19. The value of n can be calculated from the unit number as follows:

n = 1500 + (25 x unit number)

Offset	15 … 8	7 … 0
n+19	Socket Service Request Switches 2	Socket Service Request Switches 1
n+20	Socket Service Request Switches 4	Socket Service Request Switches 3
n+21	Socket Service Request Switches 6	Socket Service Request Switches 5
n+22	Socket Service Request Switches 8	Socket Service Request Switches 7

The configuration of each set of Socket Service Request Switches is shown in the following diagram.

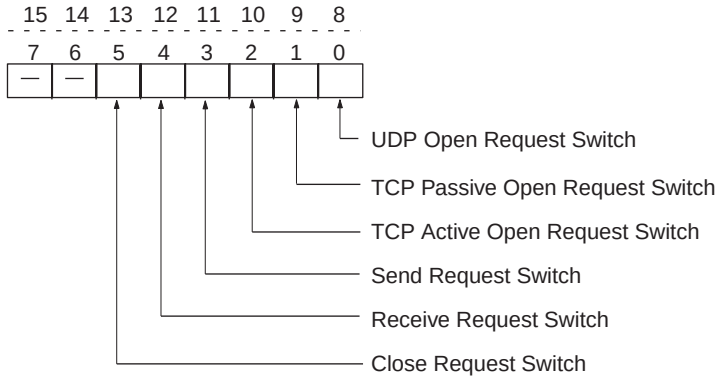

Bit		Switch	Status	Manipulated by	Unit operation
8	0	UDP Open Request Switch	ON	User	UDP socket opened when switch is turned ON.
			OFF	Unit	Unit turns OFF switch when open processing has been completed (i.e., when a connection has been made).
9	1	TCP Passive Open Request Switch	ON	User	Passive TCP socket opened when switch is turned ON.
			OFF	Unit	Unit turns OFF switch when open processing has been completed (i.e., when a connection has been made).
10	2	TCP Active Open Request Switch	ON	User	Active TCP socket opened when switch is turned ON.
			OFF	Unit	Unit turns OFF switch when open processing has been completed (i.e., when a connection has been made)
11	3	Send Request Switch	ON	User	Send processing executed when switch is turned ON. (The protocol (TCP/UDP) is determined when the socket is opened.)
			OFF	Unit	Unit turns OFF switch when send processing has been completed.
12	4	Receive Request Switch	ON	User	Receive processing executed when switch is turned ON. (The protocol (TCP/UDP) is determined when the socket is opened.)
			OFF	Unit	Unit turns OFF switch when receive processing has been completed.
13	5	Close Request Switch	ON	User	Close processing executed when switch is turned ON. (The protocol (TCP/UDP) is determined when the socket is opened.)
			OFF	Unit	Unit turns OFF switch when close processing has been completed.

As shown in the above table, the Request Switches are turned OFF by the Ethernet Unit when the requested processes has been completed.

Note There is also a Socket Force-close Switch in bit 2 of the first word allocated to the Ethernet Unit in the CPU Bus Unit Area in the CIO Area. When the Socket Force-close Switch is turned ON, all sockets that are open will be force-closed. Refer to page 68 for details.

When using socket services with the Socket Service Request Switches, the ladder diagram should be programmed to check the response codes when Socket Service Request Switches are turned OFF.

6-2-4 UDP/TCP Socket Status

The status of the UDP and TCP sockets is provided in the Socket Status Words shown in the following diagram. There is a status word for each socket for both UDP and TCP. The Socket Status Words are allocated in the CPU Bus Unit Area in the CPU Area starting at the word n+ 1. The value of n can be calculated from the unit number as follows:

n = 1500 + (25 x unit number)

	15 8 7 0
n+1	UDP Socket No. 1 Status
n+2	UDP Socket No. 2 Status
n+3	UDP Socket No. 3 Status
n+4	UDP Socket No. 4 Status
n+5	UDP Socket No. 5 Status
n+6	UDP Socket No. 6 Status
n+7	UDP Socket No. 7 Status
n+8	UDP Socket No. 8 Status
n+9	TCP Socket No. 1 Status
n+10	TCP Socket No. 2 Status
n+11	TCP Socket No. 3 Status
n+12	TCP Socket No. 4 Status
n+13	TCP Socket No. 5 Status
n+14	TCP Socket No. 6 Status
n+15	TCP Socket No. 7 Status
n+16	TCP Socket No. 8 Status

The flags shown in the following diagram are provided in the Socket Status Words for socket service requests made with the Socket Service Request Switches.

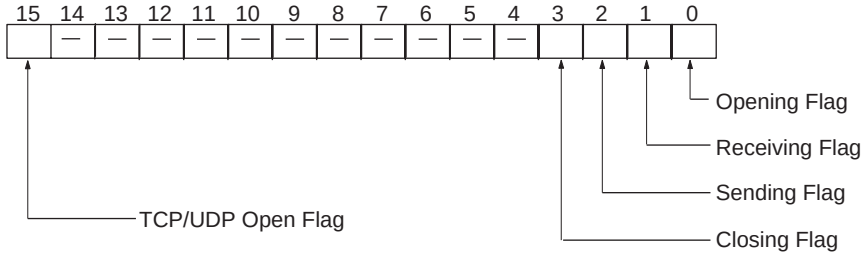

Bit	Switch	Status	Manipulated by	Unit operation
0	Opening Flag	ON	Unit	Turns ON when an open request is received.
		OFF		Turns OFF when open processing has been completed.
1	Receiving Flag	ON		Turns ON when a receive request is received.
		OFF		Turns OFF when receive processing has been completed.
2	Sending Flag	ON		Turns ON when a send request is received.
		OFF		Turns OFF when send processing has been completed.
3	Closing Flag	ON		Turns ON when an close request is received.
		OFF		Turns OFF when close processing has been completed.
15	Socket Open Flag	ON		Turns ON when open processing has been completed (i.e., when a connection is made).
		OFF		Turns OFF when close processing has been completed. (Will remain OFF when open processing ends in an error.)

Note The TCP socket connection status is also provided as codes in the following words of the words allocated to the Ethernet Unit in the CPU Bus Unit Area in the DM Area: D30000 + (100 x unit number) +9 to +16. Refer to *TCP Socket Connection Status* on page 75 and to *Appendix D TCP Status Transitions* for details.

6-2-5 Application Procedure

Procedure

1,2,3... 1. Set the socket service parameters in the CPU Bus Unit Area in the DM Area.

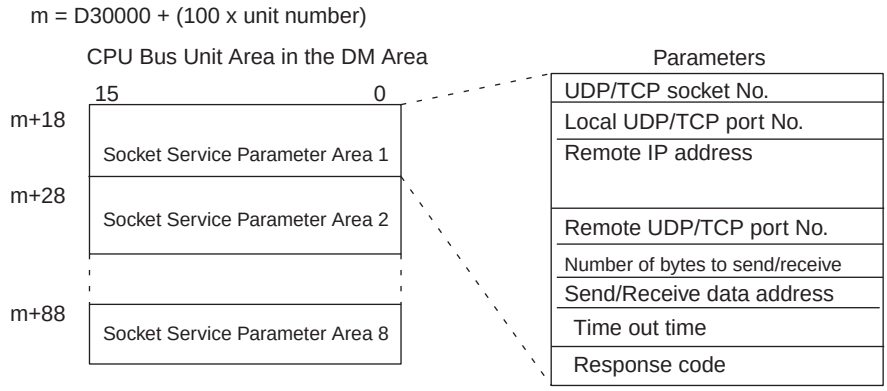

2. Turn ON the Socket Service Request Bits in the CPU Bus Unit Area in the CIO Area.

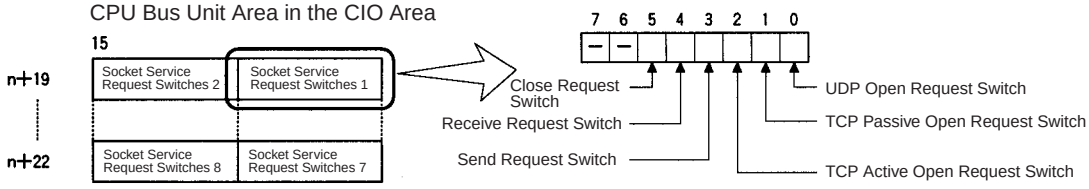

3. When a send or receive request is made, the data will be automatically sent or received according to the send/receive data address in the Socket Service Parameter Area. When processing has been completed, a response code will be automatically stored in the Socket Service Parameters.

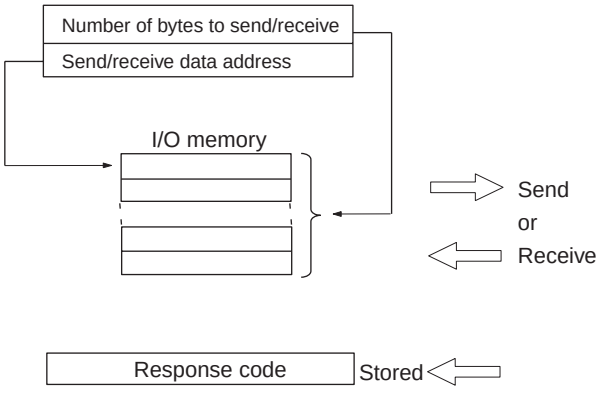

Precautions

A Socket Service Parameter Area cannot be used for other sockets once open processing has been successfully completed for it. Check the socket status before attempting to open a socket. TCP socket status is provided in words m+9 to m+16 in the DM Area for sockets 1 to 8.

TCP Connection Status

The TCP connection status is provided for ports for which TCP sockets have been opened. When a port is closed, the previous status will remain in the DM Area until a socket is opened again. Writing data to the DM Area, however, is not synced with writing to the Socket Status Areas, and timing may vary somewhat.

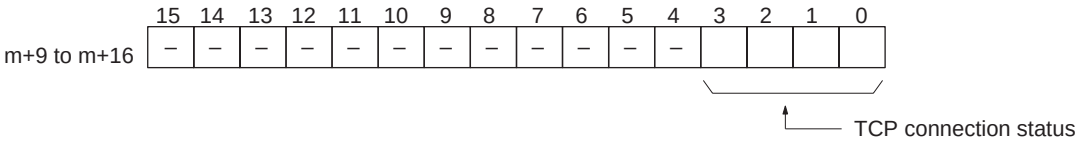

Status in indicated in bits 0 to 3 using the 1-digit hexadecimal codes shown in the following table.

Code	Status	Meaning
0	CLOSED	Connection closed.
1	LISTEN	Waiting for connection.
2	SYN SENT	Active and waiting for SYN.
3	SYN RECEIVED	SYN sent and received.
4	ESTABLISHED	Connection established.
5	CLOSE WAIT	FIN received and waiting for close.
6	FIN WAIT1	Finished and FIN sent.
7	CLOSING	Finished and FIN exchanged. Waiting for acknowledgement of FIN arrival.
8	LAST ACK	FIN received and finished. Waiting for acknowledgement of FIN arrival.
9	FIN WAIT2	FIN arrival acknowledged. Waiting for FIN.
A	TIME WAIT	Finished and waiting for silence for twice the maximum segment life (2MSL).

6-2-6 Socket Services and Socket Status

When using socket services, it is important to consider the timing of the status changes in the Socket Status Area. The diagram below shows a flowchart for opening UDP.

The flow is similar for other socket services. Replace the names of the appropriate flags in the flowchart to adapt it to other socket services.

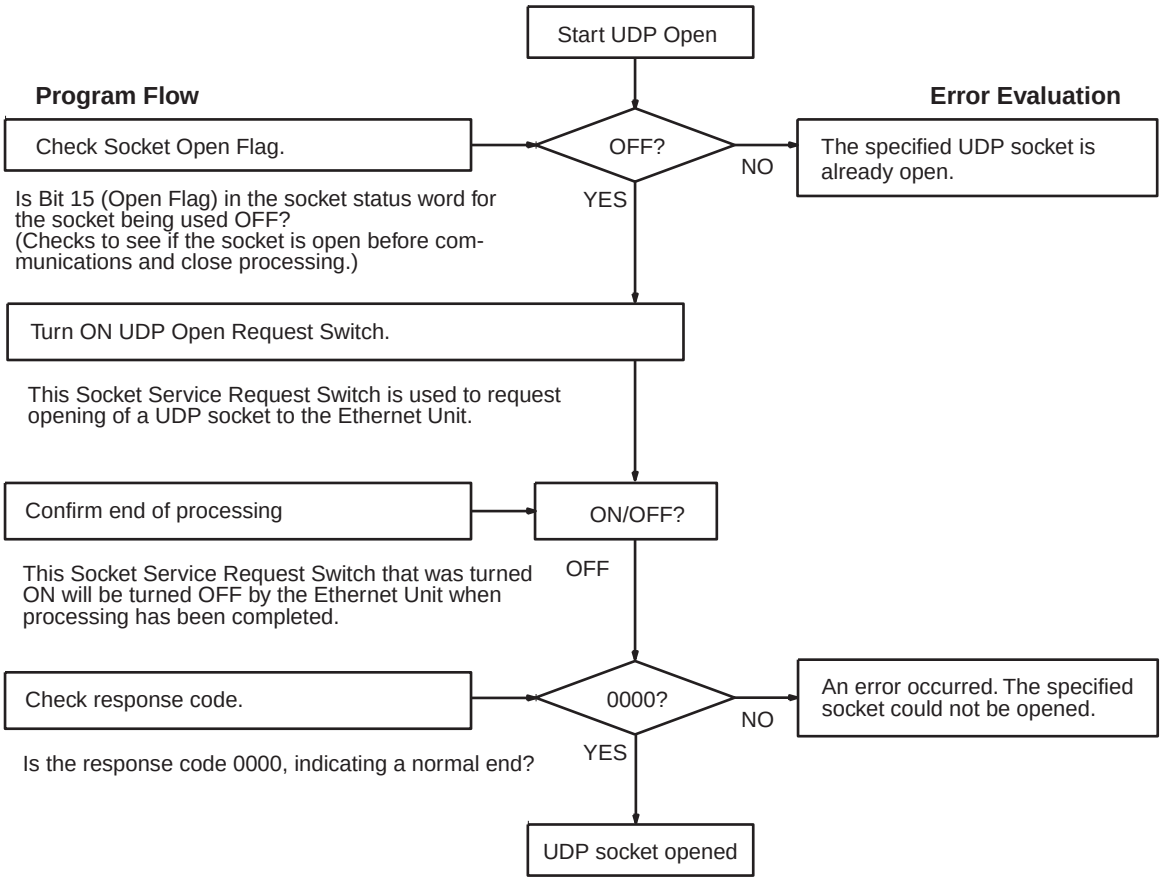

6-2-7 Timing Charts

The timing of flags for socket services (Opening, Receiving, Sending, or Closing Flag) when the Request Switches are used and the changes in the response code are shown in the following chart.

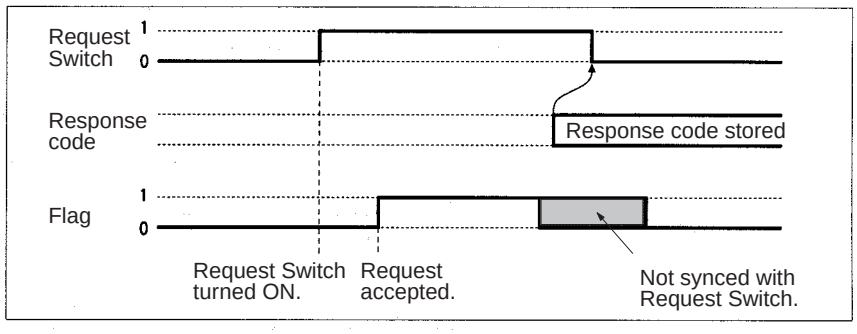

Closing during Other Processes

The Close Request Switch or Force-close Switch can be used to close a socket even when open, receive, or send processing is being executed. Closing is the only other process that is possible during other processes.

Close Request Switch

The processing results are stored as the response code when the Close Request Switch is used. There will always be one PC cycle time between

turning OFF the Request Switch for the canceled process and turning of the Close Request Switch, allowing time for the response code to be read.

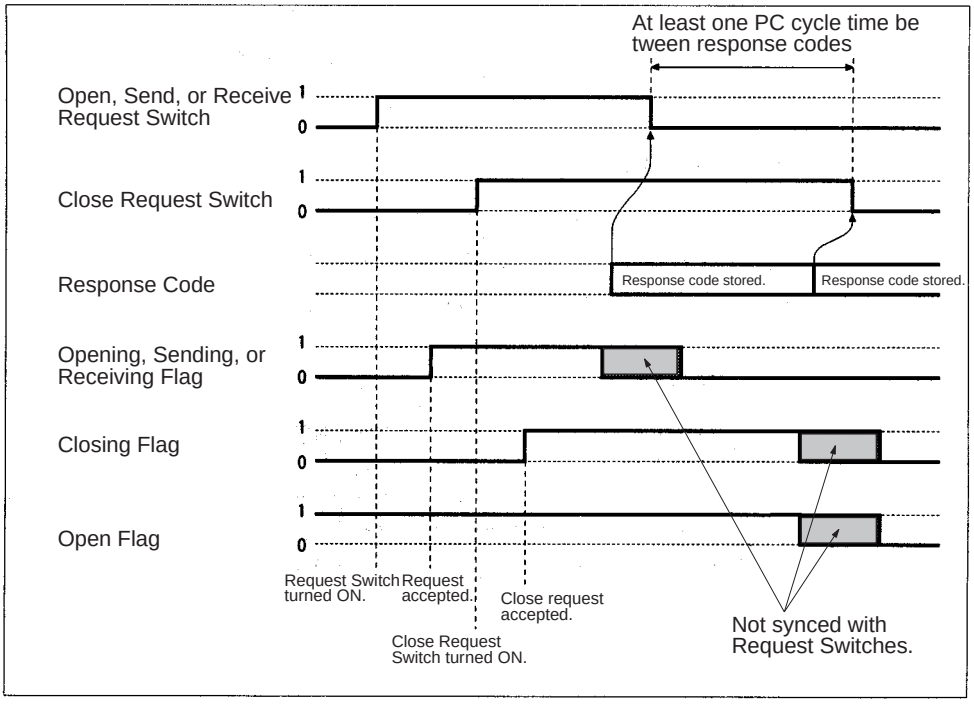

Note The Open Flag will not turn ON at all if a close request is made during open processing.

Force-close Switch

The requested processes are canceled and an response code is stored when the Force-close Switch is used.

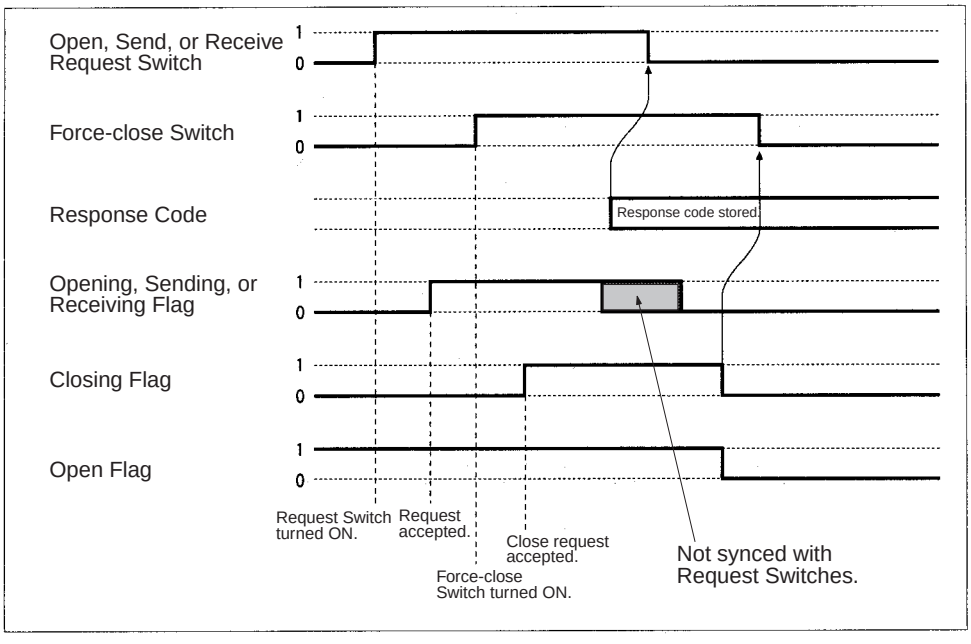

Note The Open Flag will not turn ON at all if a force-close request is made during open processing.

6-2-8 TCP/IP Communications Programming Example

The following programming example illustrates transferring 100 bytes of data between an Ethernet Unit and a host computer using TCP/IP communications.

System Configuration

The programming example uses the following system configuration. For the TCP connection, the Ethernet Unit uses a passive open and the host computer uses an active open.

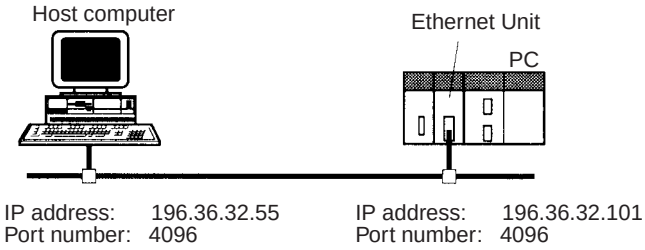

Data Flow

The data will flow between the CPU Unit, Ethernet Unit, and host computer as shown in the following diagram.

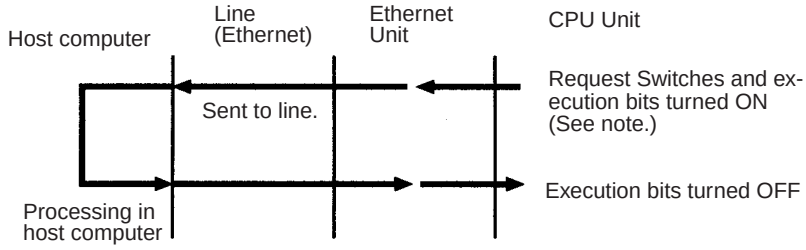

Note Here, “execution bits” refer to CIO 000000 to CIO 000003, which are used in the ladder diagram to control execution of communications.

Basic Operations

- CIO 000000 is turned ON to request opening a TCP socket from the Ethernet Unit.
- CIO 000001 is turned ON to request closing the TCP socket from the Ethernet Unit.
- CIO 000002 is turned ON to request sending data from the Ethernet Unit. Data (100 bytes) is sent beginning at D00000.
- CIO 000003 is turned ON to request receiving data from the Ethernet Unit. The data that is received (100 bytes) is stored beginning at D01000.
- One of the bits between CIO 000100 and CIO 000103 will turn ON if an error occurs. Refer to *6-2-2 Response Codes*for information on errors.

Program Memory Map

The send and receive data and bits (flags) used by the program are shown in the following diagram.

DM Area

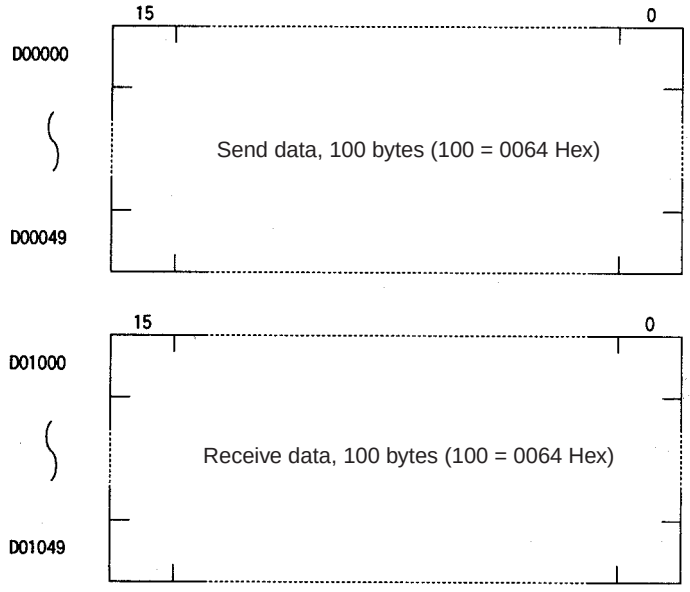

CIO Area

The following bits and flags are used to control CMND(490) execution. The bits in CIO 0000 are used to signal execution, the bits in CIO 0001 are used to signal errors, and the bits in CIO 0002 are used to control the program so that the instruction is executed only once.

	15 to 8	7	6	5	4	3	2	1	0
CIO 0000						TCP Receive Bit	TCP Send Bit	TCP Close Bit	TCP Open Bit
CIO 0001						TCP Receive Error Flag	TCP Send Error Flag	TCP Close Error Flag	TCP Open Error Flag
CIO 0002						TCP Receiving Flag	TCP Sending Flag	TCP Closing Flag	TCP Opening Flag

Programming Example

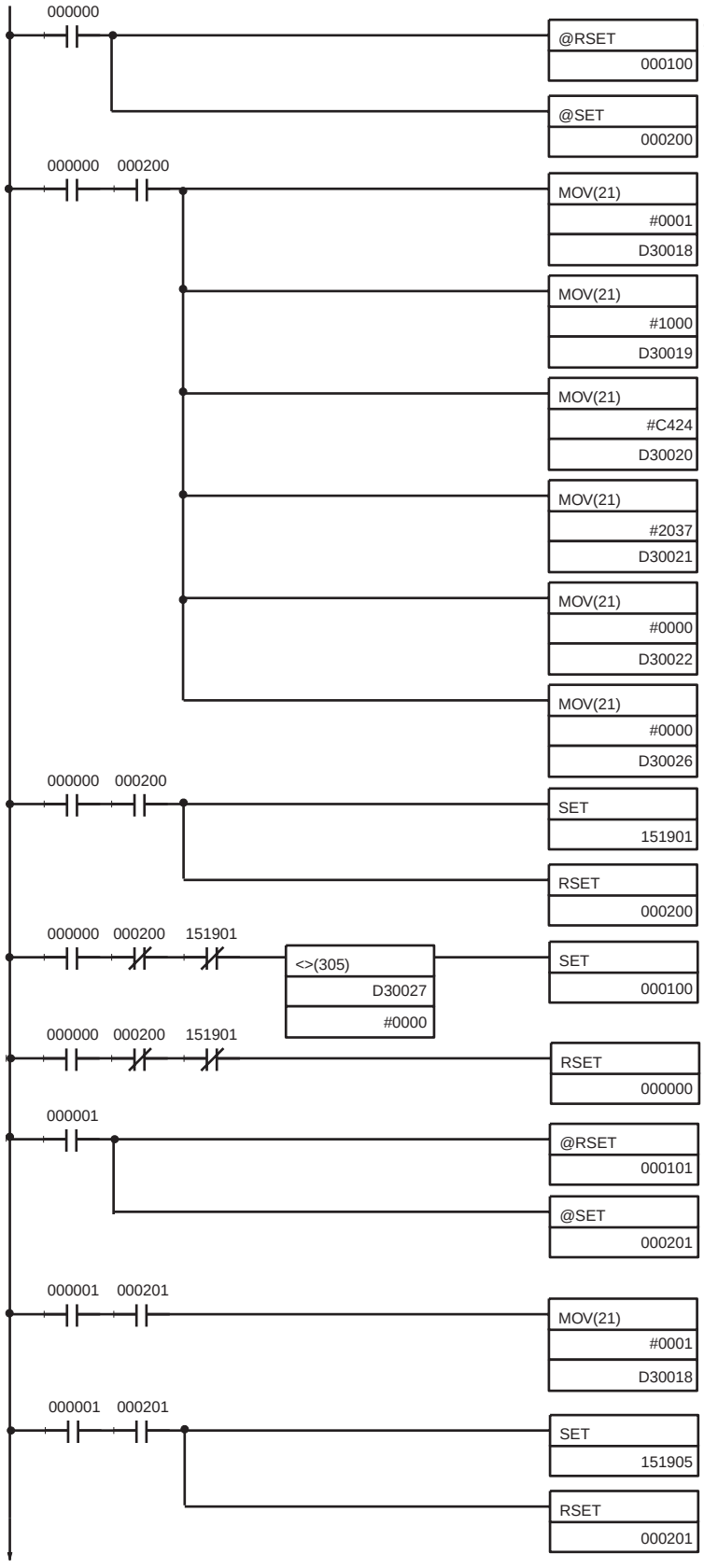

TCP Passive Open
When the TCP Open Bit (CIO 000000) turns ON, the TCP Open Error Flag (CIO 000100) is turned OFF and the TCP Opening Flag (CIO 000200) is turned ON to initialize processing.

When the TCP Opening Flag (CIO 000200) turns ON, the following parameters are written to the parameter area for socket number 1.
D30018: 0001 Hex = UDP/TCP socket No. 1
D30019: 1000 Hex = Local UDP/TCP port No. 4096
D30020 and D30021:
C424 2037 Hex =
Remote IP address 196.36.32.55
D30022: 0000 Hex = Any remote UDP/TCP port No.
D30026: 0000 Hex = No timeout time

After the parameters have been set, the TCP Passive Open Request Switch (CIO 151901) is turned ON and the TCP Opening Flag (CIO 000200) is turned OFF.

If the TCP Passive Open Request Switch (CIO 151901) turns OFF while the TCP Opening Flag (CIO 000200) is OFF, the contents of the response code (D30027) in the Socket Service Parameter Area is checked, and if it is not 0000 Hex (normal end), the TCP Open Error Flag (CIO 000100) is turned ON.

After the execution results have been checked, the TCP Open Bit (CIO 000000) is turned OFF.

TCP Close
When the TCP Close Bit (CIO 000001) turns ON, the TCP Close Error Flag (CIO 000101) is turned OFF and the TCP Closing Flag (CIO 000201) is turned ON to initialize processing.

When the TCP Closing Flag (CIO 000201) turns ON, the following parameter is written to the parameter area for socket number 1.
D30018: 0001 Hex = UDP/TCP socket No. 1

After the parameter has been set, the Close Request Switch (CIO 151905) is turned ON and the TCP Closing Flag (CIO 000201) is turned OFF.

If the Close Request Switch (CIO 151905) turns OFF while the TCP Opening Flag (CIO 000201) is OFF, the contents of the response code (D30027) in the Socket Service Pa rameter Area is checked, and if it is not 0000 Hex (normal end), the TCP Close Error Flag (CIO 000101) is turned ON.

After the execution results have been checked, the TCP Close Bit (CIO 000001) is turned OFF.

Continued on next page.

Continued from previous page.

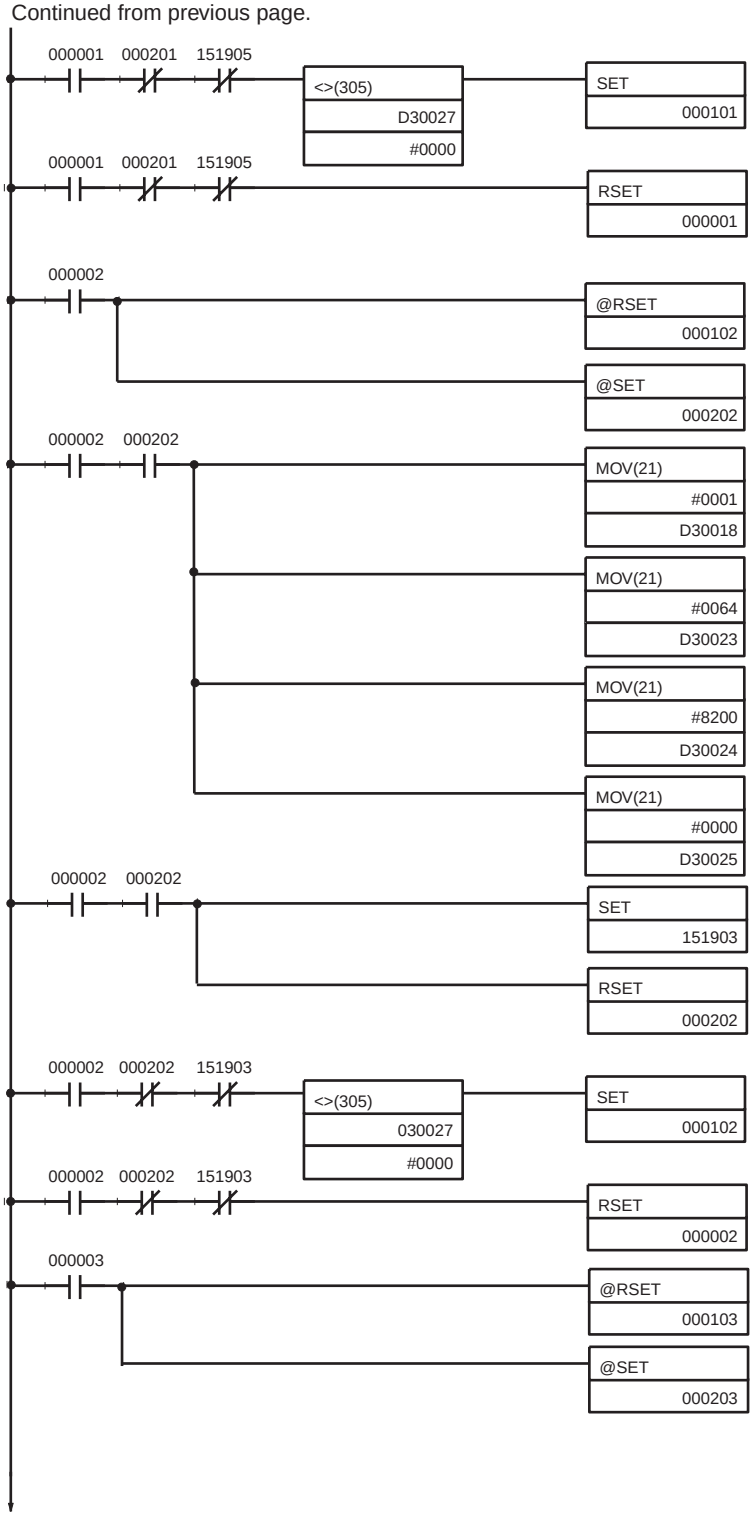

TCP Send
When the TCP Send Bit (CIO 000002) turns ON, the TCP Send Error Flag (CIO 000102) is turned OFF and the TCP Sending Flag (CIO 000202) is turned ON to initialize processing.

When the TCP Sending Flag (CIO 000202) turns ON, the following parameters are written to the parameter area for socket number 1.
D30018: 0001 Hex = UDP/TCP socket No. 1
D30023: 0064 Hex = No. of send/receive bytes is 100
D30024 and D30025:
8200 0000 Hex =
Send/receive data address D00000

After the parameters have been set, the Send Request Switch (CIO 151903) is turned ON and the TCP Sending Flag (CIO 000202) is turned OFF.

If the Send Request Switch (CIO 151903) turns OFF while the TCP Sending Flag (CIO 000202) is OFF, the contents of the response code (D30027) in the Socket Service Parameter Area is checked, and if it is not 0000 Hex (normal end), the TCP Send Error Flag (CIO 000102) is turned ON.

After the execution results have been checked, the TCP Send Bit (CIO 000002) is turned OFF.

TCP Receive
When the TCP Receive Bit (CIO 000003) turns ON, the TCP Receive Error Flag (CIO 000103) is turned OFF and the TCP Receiving Flag (CIO 000203) is turned ON to initialize processing.

Continued on next page.

Continued from previous page.

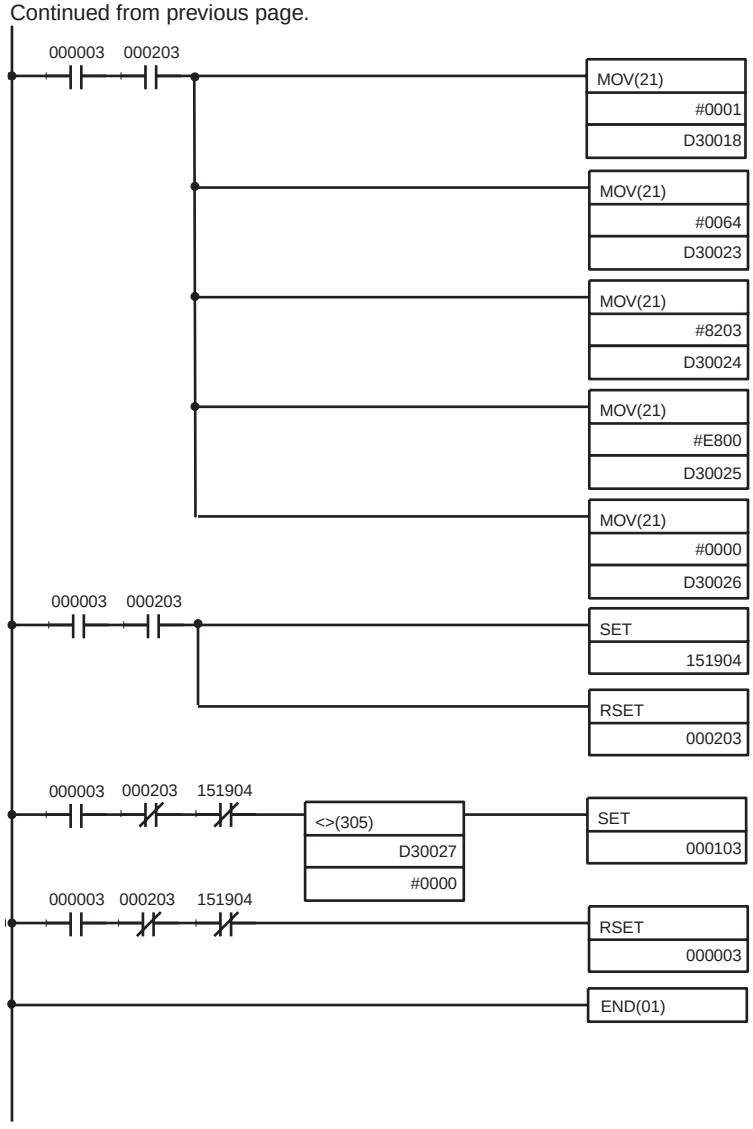

When the TCP Receiving Flag (CIO 000203) turns ON, the following parameters are written to the parameter area for socket number 1.
D30018: 0001 Hex = UDP/TCP socket No. 1
D30023: 0064 Hex = No. of send/receive bytes is 100
D30024 and D30025:
8203 E800 Hex =
Send/receive data address D01000
D30026: 0000 Hex = No timeout time.

After the parameter has been set, the Receive Request Switch (CIO 151904) is turned ON and the TCP Receiving Flag (CIO 000203) is turned OFF.

If the Receive Request Switch (CIO 151904) turns OFF while the TCP Receiving Flag (CIO 000203) is OFF, the contents of the response code (D30027) in the Socket Service Parameter Area is checked, and if it is not 0000 Hex (normal end), the TCP Receive Error Flag (CIO 000103) is turned ON.

After the execution results have been checked, the TCP Receive Bit (CIO 000003) is turned OFF.

Note When using the above programming example, change the bit and word addresses as necessary to avoid using the same areas used by other parts of the user program or the CPU Bus Unit.

6-2-9 UDP/IP Communications Programming Example

The following programming example illustrates transferring 100 bytes of data between an Ethernet Unit and a host computer using UDP/IP communications.

System Configuration

The programming example uses the following system configuration.

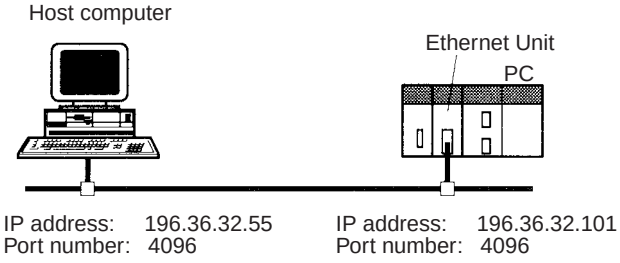

Basic Operations

- CIO 000000 is turned ON to request opening a UDP socket from the Ethernet Unit.
- CIO 000001 is turned ON to request closing the UDP socket from the Ethernet Unit.
- CIO 000002 is turned ON to request sending data from the Ethernet Unit.
- CIO 000003 is turned ON to request receiving data from the Ethernet Unit. The data that is received (100 bytes) is stored beginning at D01000.
- One of the bits between CIO 000100 and CIO 000103 will turn ON if an error occurs. Refer to*6-2-2 Response Codes* for information on errors.

Program Memory Map

The send and receive data and bits (flags) used by the program are shown in the following diagram.

DM Area

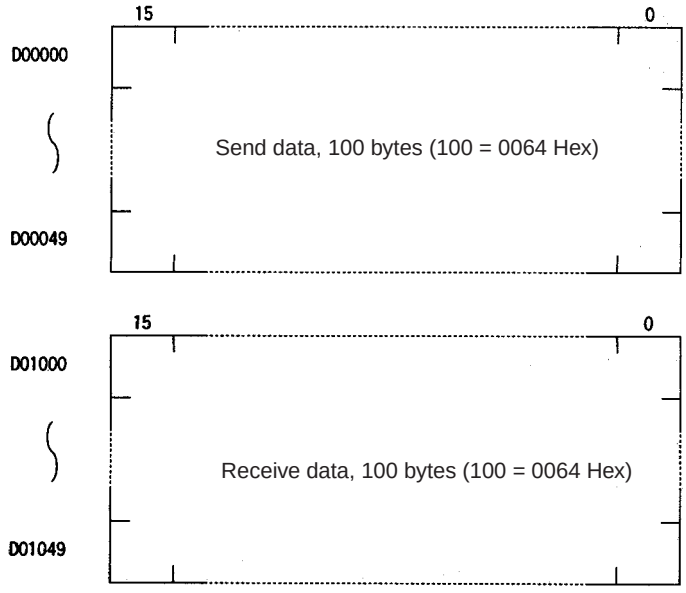

CIO Area

The following bits and flags are used to control CMND(490) execution. The bits in CIO 0000 are used to signal execution, the bits in CIO 0001 are used to signal errors, and the bits in CIO 0002 are used to control the program so that the instruction is executed only once.

	15 to 8	7	6	5	4	3	2	1	0
CIO 0000						TCP Receive Bit	TCP Send Bit	TCP Close Bit	TCP Open Bit
CIO 0001						TCP Receive Error Flag	TCP Send Error Flag	TCP Close Error Flag	TCP Open Error Flag
CIO 0002						TCP Receiving Flag	TCP Sending Flag	TCP Closing Flag	TCP Opening Flag

Programming Example

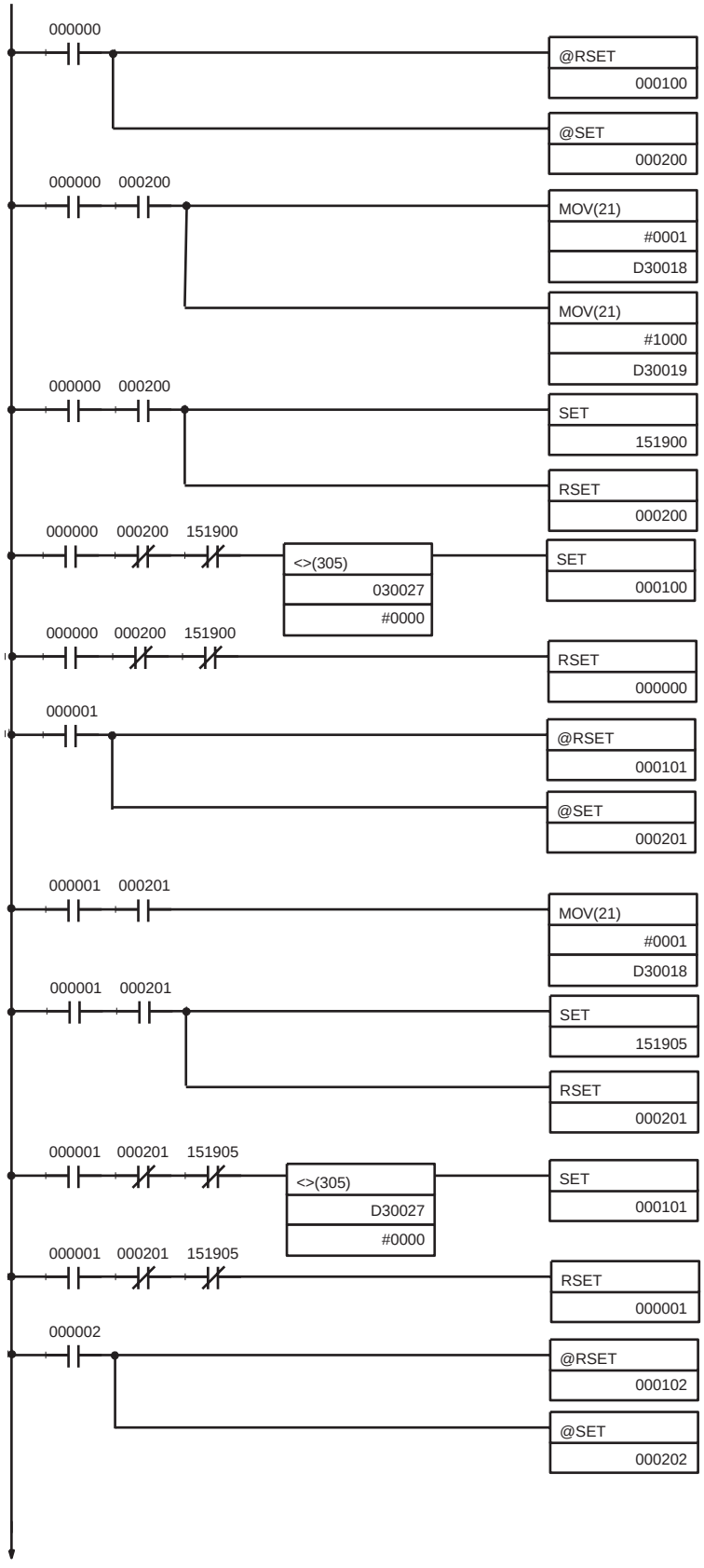

UDP Open
When the UDP Open Bit (CIO 000000) turns ON, the UDP Open Error Flag (CIO 000100) is turned OFF and the UDP Opening Flag (CIO 000200) is turned ON to initialize processing.

When the UDP Opening Flag (CIO 000200) turns ON, the following parameters are written to the parameter area for socket number 1.
D30018: 0001 Hex = UDP/TCP socket No. 1
D30019: 1000 Hex = Local UDP/TCP port No. 4096

After the parameters have been set, the UDP Open Request Switch (CIO 151900) is turned ON and the UDP Opening Flag (CIO 000200) is turned OFF.

If the UDP Open Request Switch (CIO 151900) turns OFF while the UDP Opening Flag (CIO 000200) is OFF, the contents of the response code (D30027) in the Socket Service Parameter Area is checked, and if it is not 0000 Hex (normal end), the UDP Open Error Flag (CIO 000100) is turned ON.

After the execution results have been checked, the UDP Open Bit (CIO 000000) is turned OFF.

UDP Close
When the UDP Close Bit (CIO 000001) turns ON, the UDP Close Error Flag (CIO 000101) is turned OFF and the UDP Closing Flag (CIO 000201) is turned ON to initialize processing.

When the UDP Closing Flag (CIO 000201) turns ON, the following parameter is written to the parameter area for socket number 1.
D30018: 0001 Hex = UDP/TCP socket No. 1

After the parameter has been set, the Close Request Switch (CIO 151905) is turned ON and the UDP Closing Flag (CIO 000201) is turned OFF.

If the Close Request Switch (CIO 151905) turns OFF while the UDP Opening Flag (CIO 000201) is OFF, the contents of the response code (D30027) in the Socket Service Parameter Area is checked, and if it is not 0000 Hex (normal end), the UDP Close Error Flag (CIO 000101) is turned ON.

After the execution results have been checked, the UDP Close Bit (CIO 000001) is turned OFF.

UDP Send
When the UDP Send Bit (CIO 000002) turns ON, the UDP Send Error Flag (CIO 000102) is turned OFF and the UDP Sending Flag (CIO 000202) is turned ON to initialize processing.

Continued on next page.

Continued from previous page.

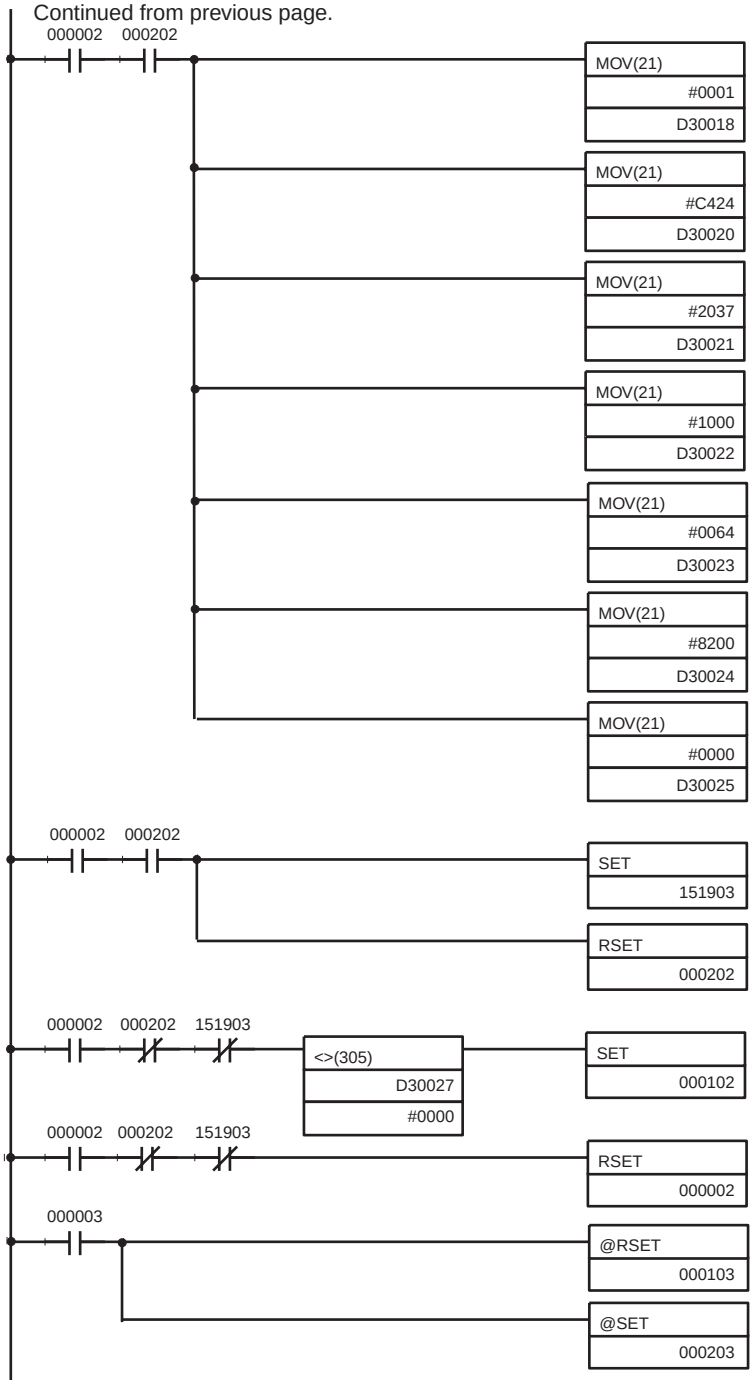

When the UDP Sending Flag (CIO 000202) turns ON, the following parameters are written to the parameter area for socket number 1.
D30018: 0001 Hex = UDP/TCP socket No. 1
D30020 and D30021:
C424 2037 Hex =
Remote IP address 196.36.32.55
D30022: 1000 Hex = Remote UDP/TCP port No. 4096
D30023: 0064 Hex = No. of send/receive bytes is 100
D30024 and D30025:
8200 0000 Hex =
Send/receive data address D00000

After the parameters have been set, the Send Request Switch (CIO 151903) is turned ON and the UDP Sending Flag (CIO 000202) is turned OFF.

If the Send Request Switch (CIO 151903) turns OFF while the UDP Sending Flag (CIO 000200) is OFF, the contents of the response code (D30027) in the Socket Service Parameter Area is checked, and if it is not 0000 Hex (normal end), the UDP Send Error Flag (CIO 000102) is turned ON.

After the execution results have been checked, the UDP Send Bit (CIO 000002) is turned OFF.

UDP Receive
When the UDP Receive Bit (CIO 000003) turns ON, the UDP Receive Error Flag (CIO 000103) is turned OFF and the UDP Receiving Flag (CIO 000203) is turned ON to initialize processing.

Continued on next page.

Continued from previous page.

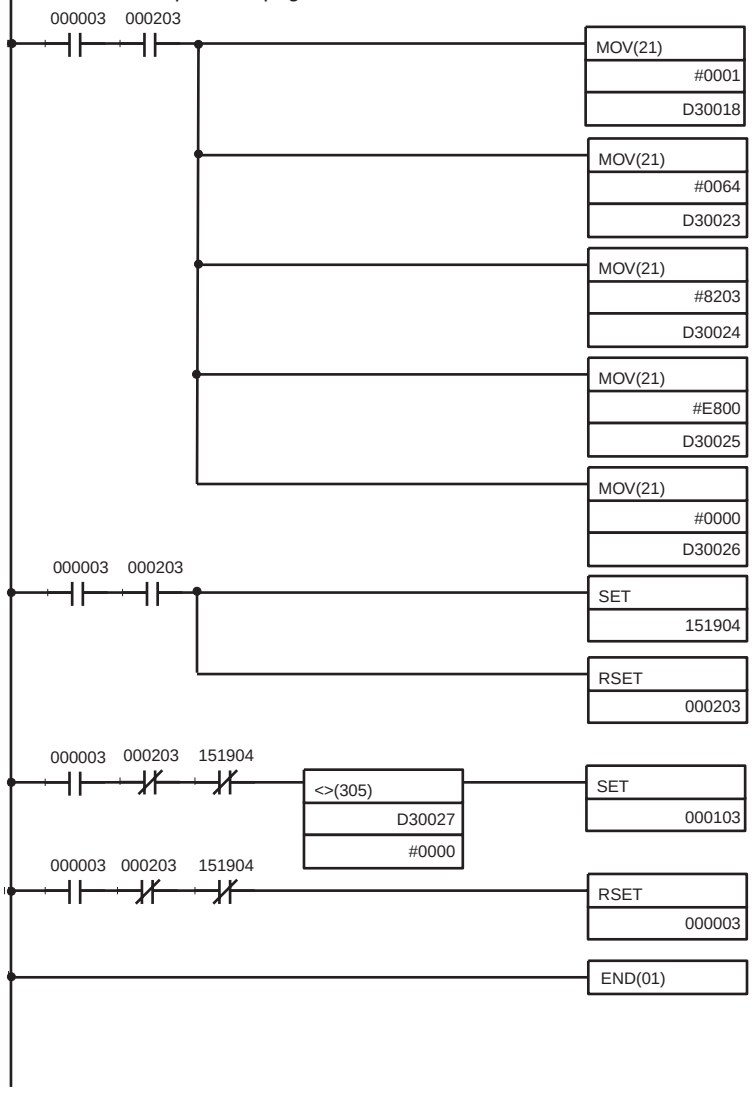

When the UDP Receiving Flag (CIO 000203) turns ON, the following parameters are written to the parameter area for socket number 1.
D30018: 0001 Hex = UDP/TCP socket No. 1
D30023: 0064 Hex = No. of send/receive bytes is 100
D30024 and D30025:
8203 E800 Hex =
Send/receive data address D01000
D30026: 0000 Hex = No timeout time.

After the parameter has been set, the Receive Request Switch (CIO 151904) is turned ON and the UDP Receiving Flag (CIO 000203) is turned OFF.

If the Receive Request Switch (CIO 151904) turns OFF while the UDP Receiving Flag (CIO 000203) is OFF, the contents of the response code (D30027) in the Socket Service Parameter Area is checked, and if it is not 0000 Hex (normal end), the UDP Receive Error Flag (CIO 000103) is turned ON.

After the execution results have been checked, the UDP Receive Bit (CIO 000003) is turned OFF.

Note When using the above programming example, change the bit and word addresses as necessary to avoid using the same areas used by other parts of the user program or the CPU Bus Unit.

6-3 Using Socket Services with CMND(490)

Service request commands can be sent to the Ethernet Unit by executing the CMND(490) instruction in the ladder diagram. CS/CJ Ethernet Units support the same functionality as the CV-series Ethernet Unit, so heritage programs can be easily corrected and reused.

Up to 16 sockets can be connected using CMND(490): 8 UDP sockets and 8 TCP sockets.

The socket service request commands that can be used are listed in the following table. Refer to *Section 11 FINS Commands Addressed to Ethernet Units* for details on these commands.

Command code		Name
MRC	SRC	
27	01	UDP OPEN REQUEST
	02	UDP RECEIVE REQUEST
	03	UDP SEND REQUEST
	04	UDP CLOSE REQUEST
	10	TCP PASSIVE OPEN REQUEST
	11	TCP ACTIVE OPEN REQUEST
	12	TCP RECEIVE REQUEST
	13	TCP SEND REQUEST
	14	TCP CLOSE REQUEST

Requests sent to the Ethernet Unit by sending commands through execution of CMND(40), and when the Unit receives a command, it will return a response. The response does not, however, indicate that processing has been completed, and the status of the flags in the Socket Status Words allocated to the Unit must be used to determine when processing has been completed.

The results of processing will be stored in the words specified when CMND(490) was executed once the requested processing has been completed.

Basic FINS Command Format

The basic format for FINS commands used for socket services is shown in the following diagram.

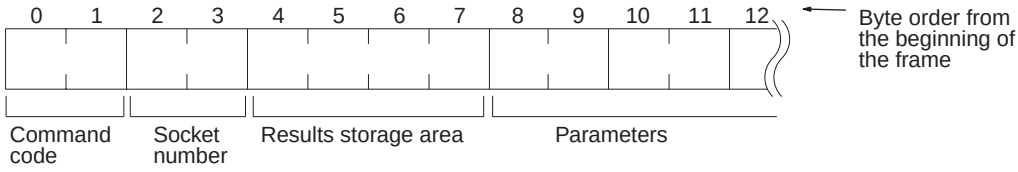

Command Code:

Specifies the process code requested from the socket.

Socket Number

Specifies the socket number for the process, between 1 and 8.

Results Storage Area

Specifies the area to store the results of the requested process.

Parameters

Specifies the parameters defined for the command code.

Note If there is more than one Communications Unit mounted to the PC, the FINS network address must be set as a parameter for CMND(490) and a local network table must be created in the routing tables from the CX-Programmer.

6-3-1 UDP/TCP Socket Status

The status of the UDP and TCP sockets is provided in the Socket Status Words shown in the following diagram. There is a status word for each socket for both UDP and TCP. The Socket Status Words are allocated in the CPU Bus Unit Area in the CPU Area starting at the word n+ 1. The value of n can be calculated from the unit number as follows:

n = 1500 + (25 x unit number)

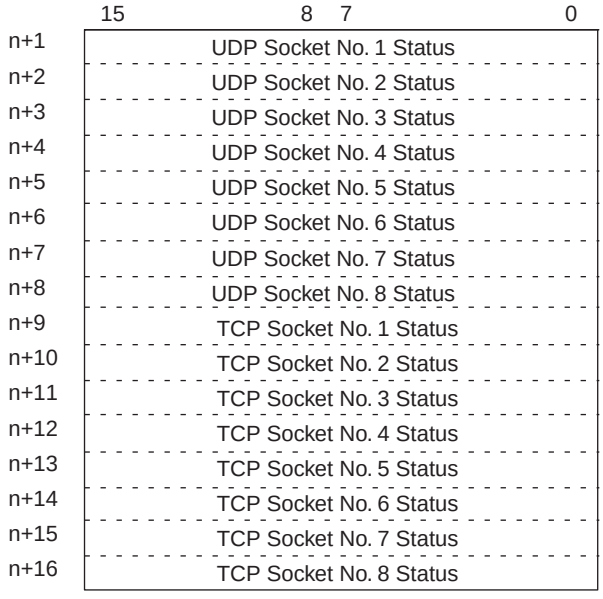

The flags shown in the following diagram are provided in the Socket Status Words for socket service requests made with CMND(490).

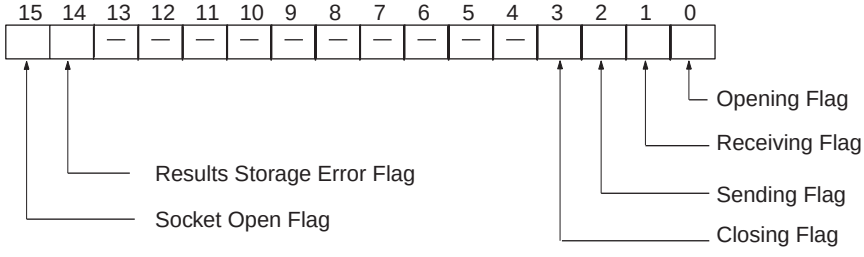

Bit	Flag	Status	Manipulated by	Unit operation
0	Opening Flag	ON	Unit	Turns ON when an open request is received.
		OFF		Turns OFF when open processing has been completed.
1	Receiving Flag	ON		Turns ON when a receive request is received.
		OFF		Turns OFF when receive processing has been completed.
2	Sending Flag	ON		Turns ON when a send request is received.
		OFF		Turns OFF when send processing has been completed.
3	Closing Flag	ON		Turns ON when an close request is received.
		OFF		Turns OFF when close processing has been completed.

Bit	Flag	Status	Manipulated by	Unit operation
14	Results Storage Error Flag	ON	Unit	Turns ON when there is an error in the Results Storage Area specified for the service request command to the Ethernet Unit. This flag will turn ON at the same timing as turning OFF bits 0 to 3 (i.e., at completion of processing).
		OFF		Turns OFF when the next request is received for processing.
15	Socket Open Flag	ON	Unit	Turns ON when open processing has been completed (i.e., when a connection is made).
		OFF		Turns OFF when close processing has been completed. (Will remain OFF when open processing ends in an error.)

Note The TCP socket connection status is also provided as codes in the following words of the words allocated to the Ethernet Unit in the CPU Bus Unit Area in the DM Area: D30000 + (100 x unit number) +9 to +16. Refer to *TCP Socket Connection Status* on page 75 and to *Appendix D TCP Status Transitions* for details.

Response Codes in the Command Response

A response code is returned in the command response as a 2-byte code that indicates the results of command execution. The response code is returned just after the command code in the response. The first byte of the response code provides the overall result of command execution and is called the main response code (MRES). The second byte provides details and is called the sub-response code (SRES).

Response Codes in the Results Storage Areas

The response code stored in the Results Storage Area is a 2-byte code that indicates the processing results of the socket service requested by the command. This response code is stored in the Results Storage Area when processing has been completed.

Using Socket Service

Each Ethernet Unit has eight TCP sockets and eight UDP sockets. Open, close, send, and receive processes are available for communications with sockets.

Open

Enables communications on a specified socket. A socket must be opened before it can be used for socket services. Opening a TCP socket establishes a connection.

Close

Ends use of the socket. Breaks the connection for a TCP socket.

Send

Sends data from a specified open socket.

Receive

Specifies an open socket and receives data from that socket.

These processes are carried out by sending FINS commands to the Ethernet Unit. The process from sending a request for processing to completion is shown in the following illustrations.

1,2,3...

1. Execute a socket service request command (MRC: 27) for the Ethernet Unit using CMND(490).

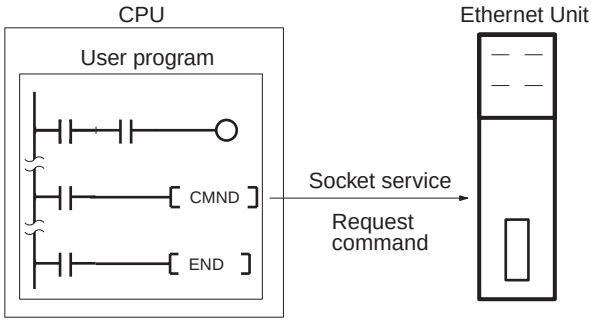

2. CMND(490) ends normally when the socket service request command is received and a response is returned (response code: 0000).

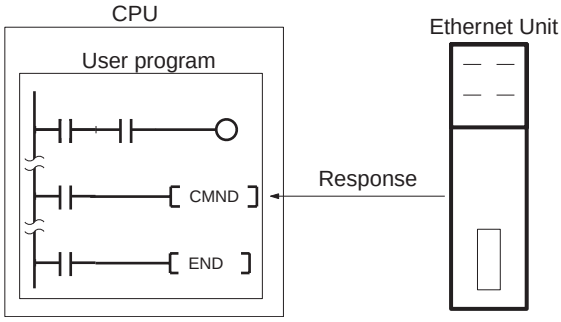

3. The Ethernet Unit starts the process requested by the parameters in the socket service request command.

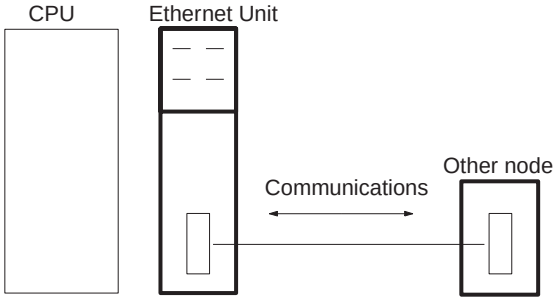

4. When the process has been completed, the result is stored in the results storage area defined in the socket service request command and the socket status will indicate completion of processing.

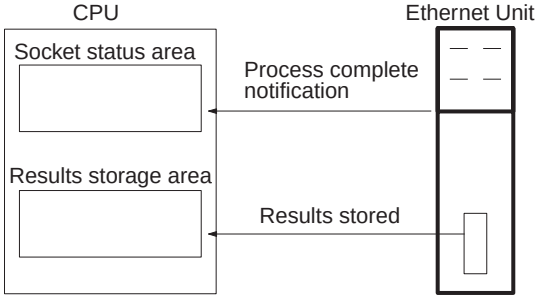

6-3-2 Socket Services and Socket Status

When using socket services, it is important to consider the timing of the status changes in the socket status area. The diagram below shows a program flowchart for opening UDP.

Program flow is similar for other socket services. Replace the names of the appropriate flags in the flowchart to adapt it to other socket services.

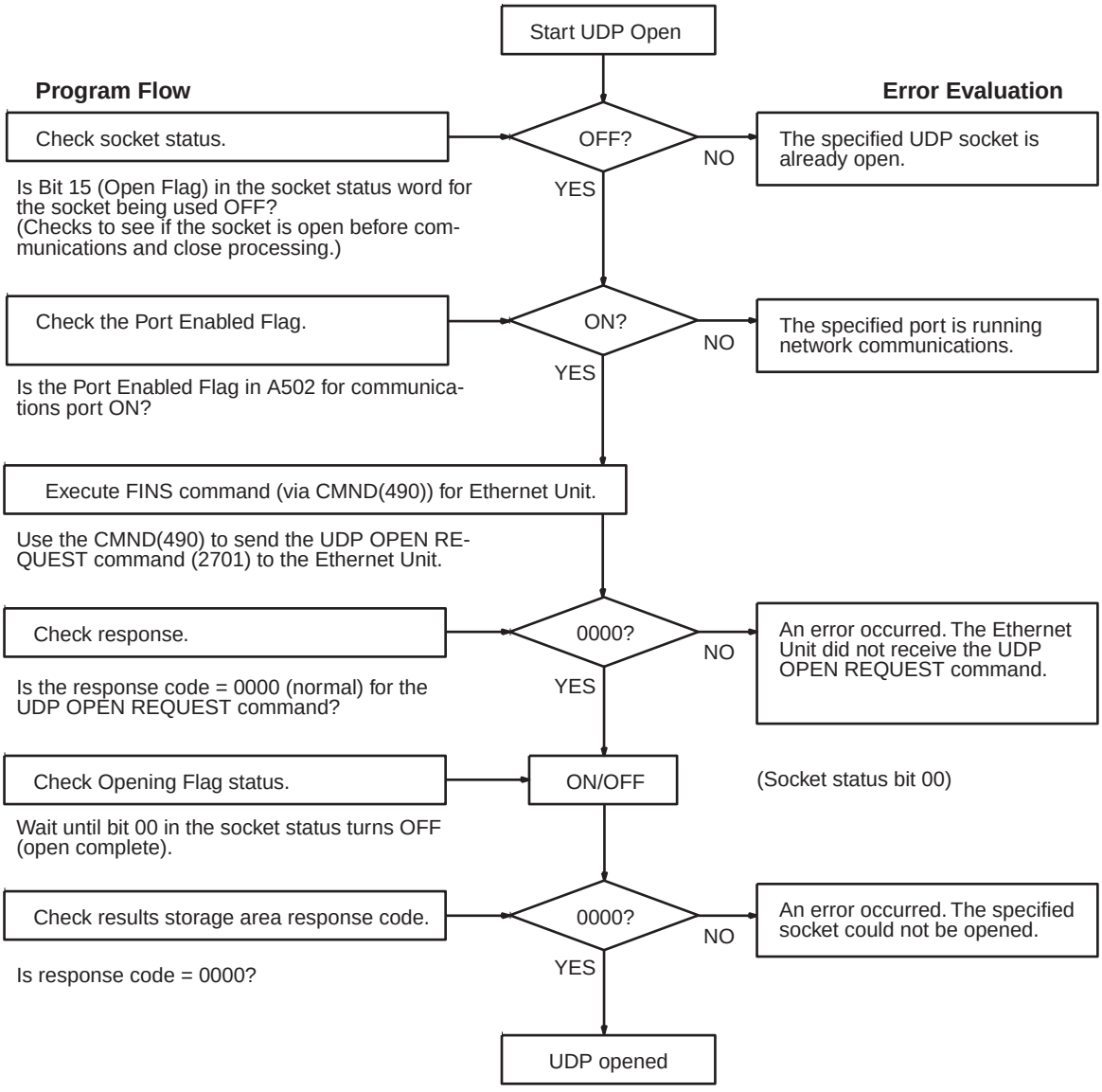

6-3-3 Communications Timing Chart

The timing of the status changes of the bits in the socket status area and the Port Enabled Flag is shown in the following diagram.

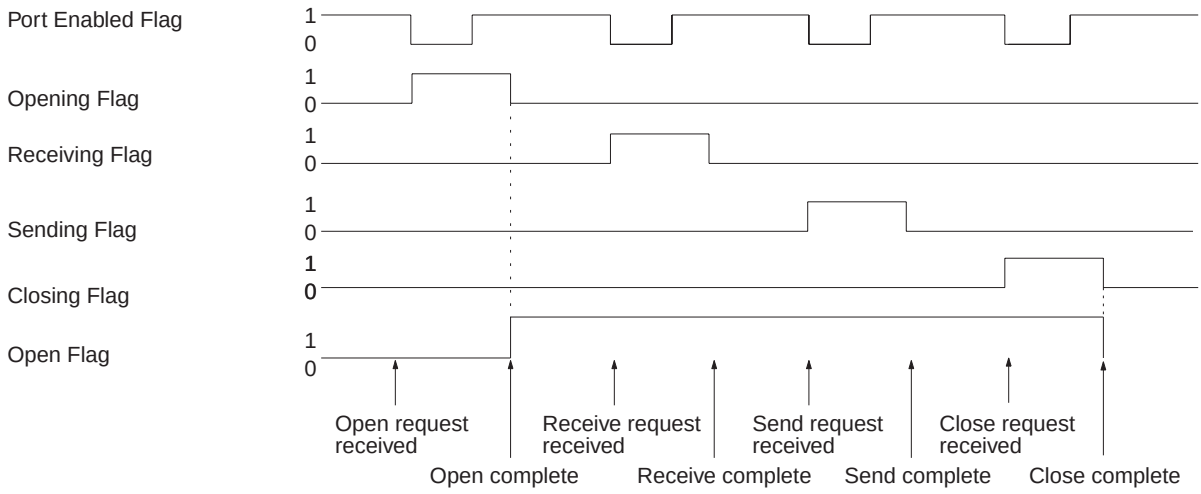

6-3-4 Socket Service Timing Chart

The timing of the socket service open, send, receive, and close request commands are shown in the following diagrams.

OPEN REQUEST

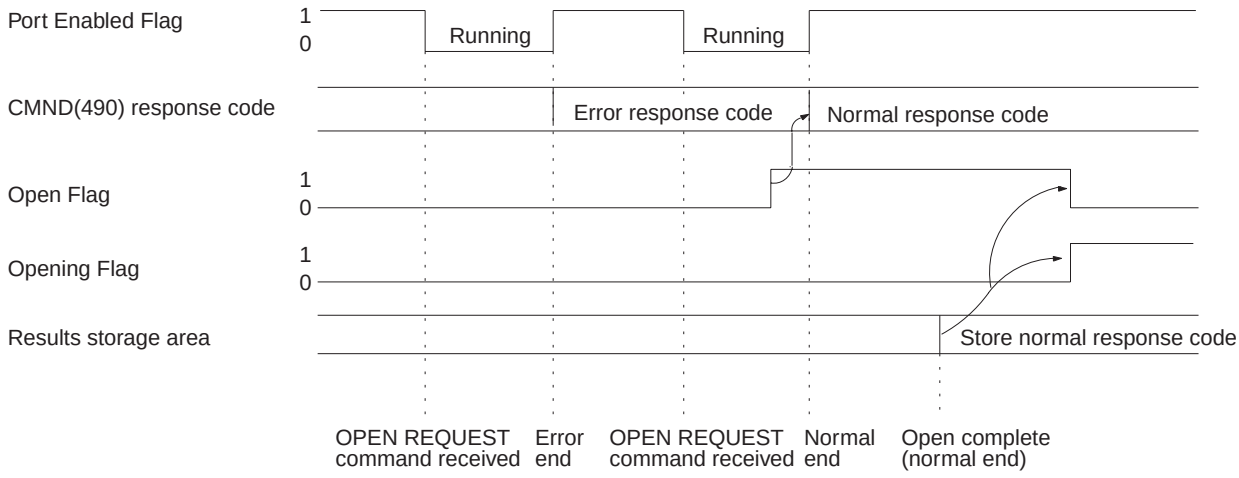

CLOSE REQUEST

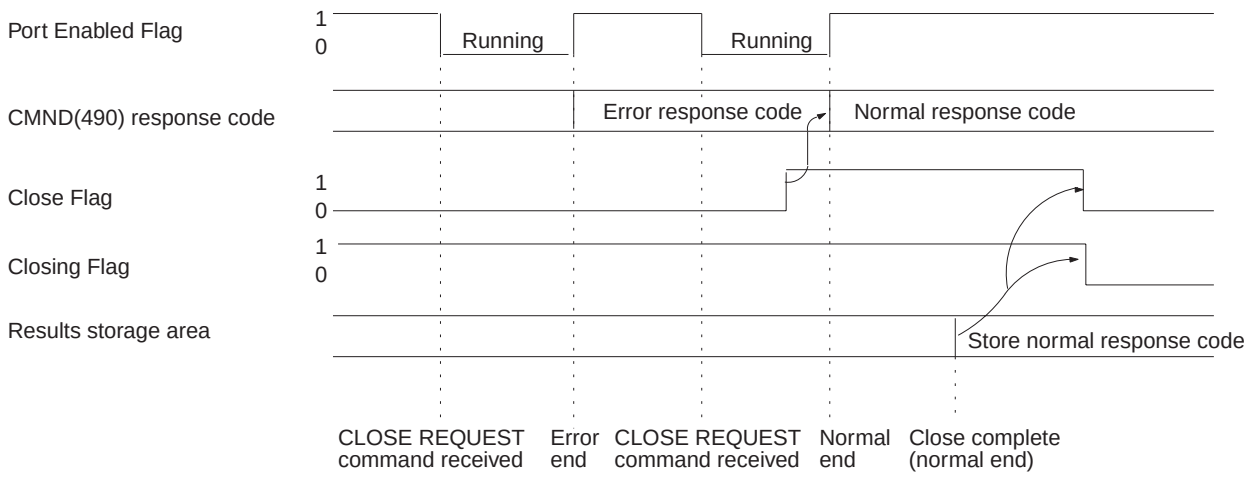

SEND REQUEST

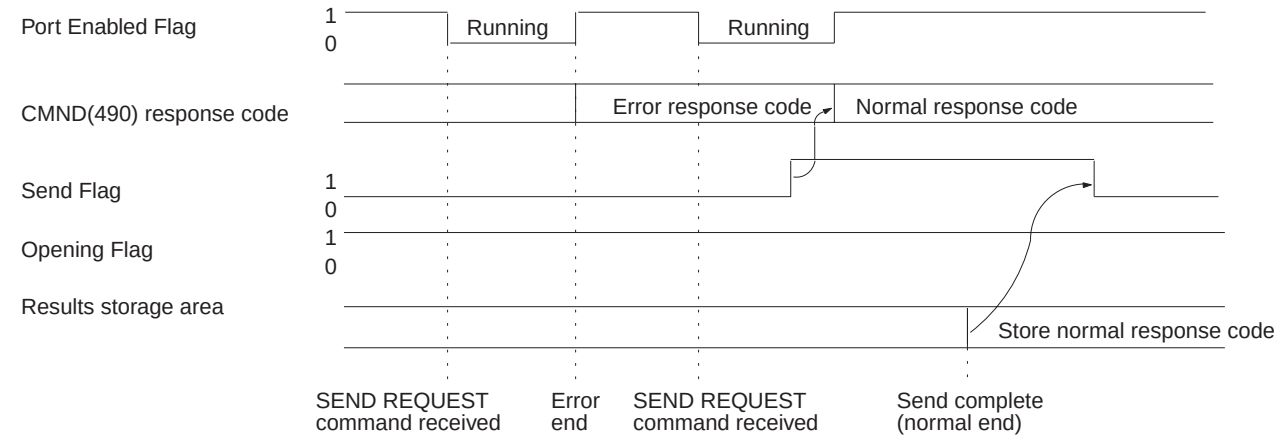

RECEIVE REQUEST

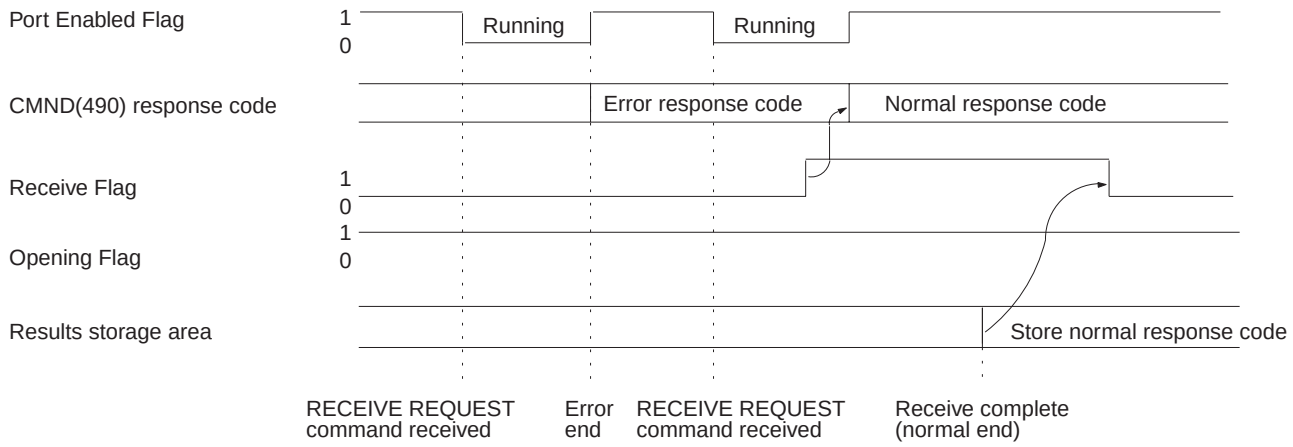

CLOSE REQUEST during RECEIVE REQUEST

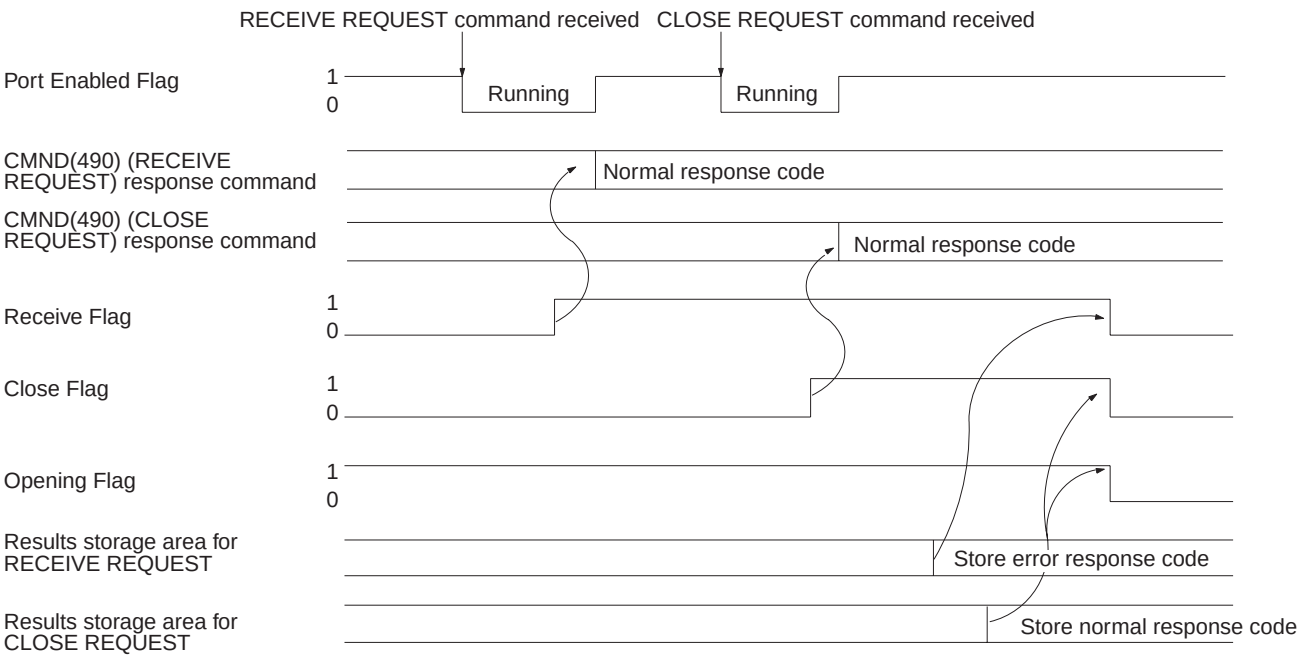

Note The timing shown in the above diagram occurs if a CLOSE REQUEST command is executed during SEND REQUEST command execution. The timing

shown in the diagram also applies if a CLOSE REQUEST command is executed during OPEN REQUEST command execution, with the exception of the status of the Opening Flag.

6-3-5 TCP/IP Communications Programming Example

The following programming example illustrates transferring 100 bytes of data between an Ethernet Unit and a host computer using TCP/IP communications.

System Configuration

The system configuration for the program example and the Ethernet Unit system setup are shown below. To establish a TCP connection, the Ethernet Unit is passively opened and the host computer actively opened.

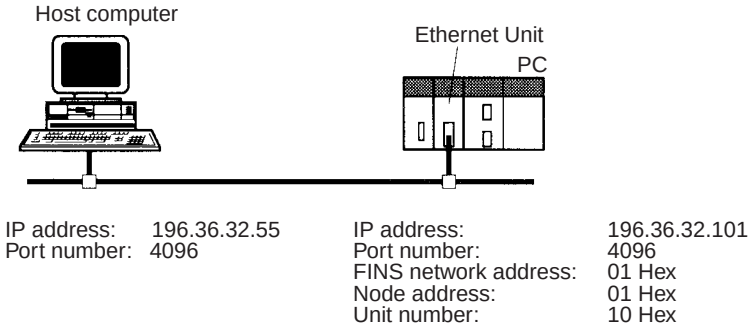

Data Flow

The data will flow between the CPU Unit, Ethernet Unit, and host computer as shown in the following diagram.

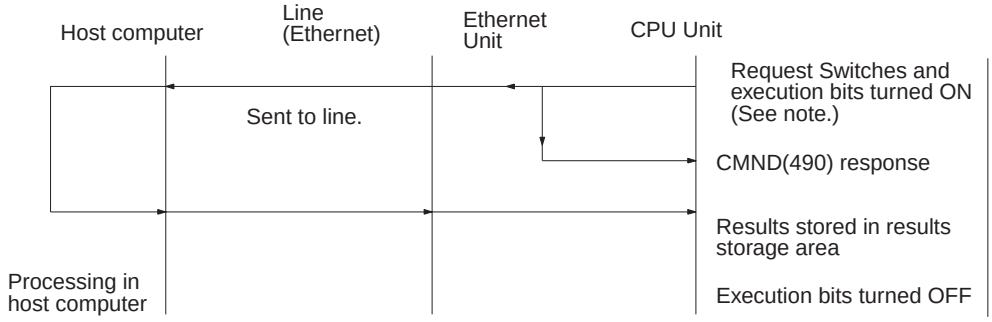

Note Here, “execution bits” refer to CIO 000000 to CIO 000003, which are used in the ladder diagram to control execution of communications and are not system flags, such as the Port Enabled Flags (A20200 to A20207).

Basic Operations

- CIO 000000 is turned ON to request opening a passive TCP socket from the Ethernet Unit.
- CIO 000001 is turned ON to request closing the TCP socket from the Ethernet Unit.
- CIO 000002 is turned ON to request sending data from the Ethernet Unit. Data (100 bytes) is sent beginning at D02005.
- CIO 000003 is turned ON to request receiving data from the Ethernet Unit. The data that is received (100 bytes) is stored beginning at D04022.

- One of the bits between CIO 000100 and CIO 000103 will turn ON if an error occurs. Refer to *6-2-2 Response Codes* for information on errors. The following areas can be used to access details about errors:

  CMND(490) response codes
  Response codes in results storage area
  Network Communications Error Flags (A21900 to A21907)
  Completion codes (A203 to A210)

Program Memory Maps

The send and receive data and bits (flags) used by the program are shown in the following diagrams. The following example shows how the memory maps are structured.

Legend

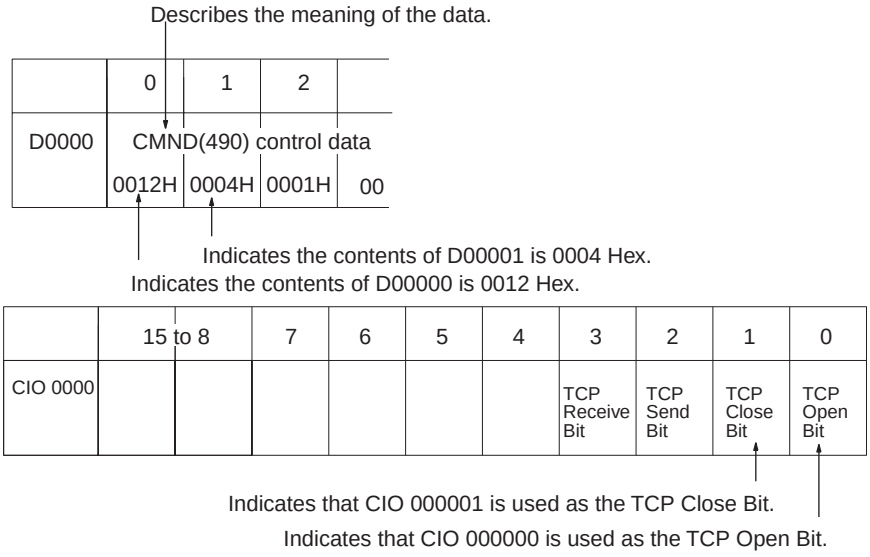

DM Area

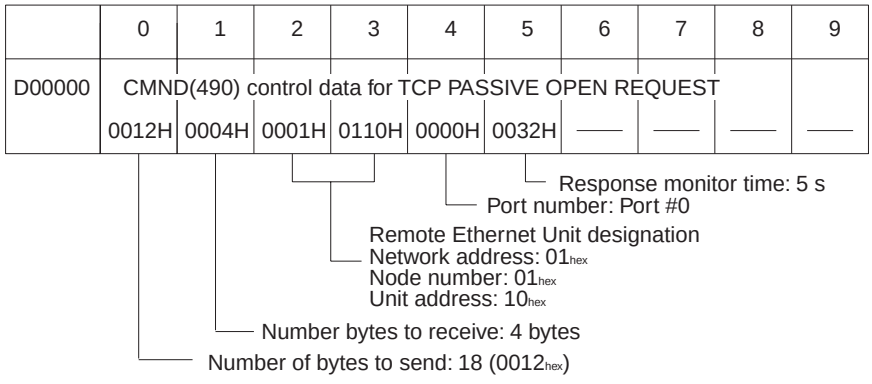

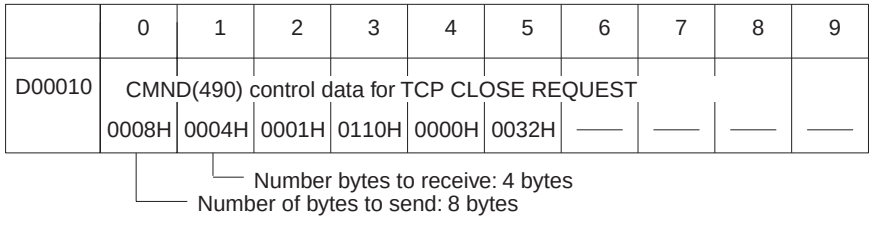

	0	1	2	3	4	5	6	7	8	9
D00020	CMND(490) control data for TCP SEND REQUEST									
	006EH	0004H	0001H	0110H	0000H	0032H	—	—	—	—

Number bytes to receive: 4 bytes
Number of bytes to send: 110 ($006E_{hex}$) bytes

Command format = 10 bytes + 100 bytes send data

	0	1	2	3	4	5	6	7	8	9
D00030	CMND(490) control data for TCP RECEIVE REQUEST									
	000CH	0004H	0001H	0110H	0000H	0032H	—	—	—	—

Number bytes to receive: 4 bytes
Number of bytes to send: 12 bytes ($000C_{hex}$)

Number of bytes received specified in command data.

	0	1	2	3	4	5	6	7	8	9
D01000	TCP PASSIVE OPEN REQUEST command data									
	2710H	0001H	8203H	FC00H	1000H	0000H	C424H	2037H	0000H	—

Remote node: Not specified
Host computer IP address: 196.36.32.55 ($C4_{hex}.24_{hex}.20_{hex}.37_{hex}$)
Timeout value: Not set
Local port number: set to 4096 (1000_{hex})
Results storage area: set to D01020 ($03FC_{hex}$)
(Refer to page for details on the results storage area.)
TCP socket number (Ethernet Unit socket number): set to 1
Command code

	0	1	2	3	4	5	6	7	8	9
D01010	TCP PASSIVE OPEN REQUEST response									
	2710H	Re-sponse code	—	—	—	—	—	—	—	—

Stores the response after command execution.

	0	1	2	3	4	5	6	7	8	9
D01020	TCP PASSIVE OPEN REQUEST results storage area									
	Re-sponse code	Remote IP address		Remote TCP port No.	—	—	—	—	—	—

	0	1	2	3	4	5	6	7	8	9
D1030	TCP CLOSE REQUEST command data									
	2714H	0001H	8204H	1A00H	—	—	—	—	—	—

Results storage area: set to D01050 ($041A_{hex}$)
TCP socket number to close: set to 1 (0001_{hex})
Command code

	0	1	2	3	4	5	6	7	8	9
D01040	TCP CLOSE REQUEST response									
	2714H	Response code			—	—	—	—	—	—
D01050	TCP CLOSE REQUEST results storage area									
	Response code	—	—	—	—	—	—	—	—	—

	0	1	2	3	4	5	6	7	8	9
D02000	TCP SEND REQUEST command data									
	2713H	0001H	820BH	C200H	0064H	Send data: 100 bytes (0064_{hex})				

No. of send bytes: 100 bytes (0064_{hex})
Results storage area: set to D03010 ($0BC2_{hex}$)
TCP socket number
Command code

	0	1	2	3	4	5	6	7	8	9
D03000	TCP SEND REQUEST response									
	2713H	Response code	—	—	—	—	—	—	—	—
D03010	TCP SEND REQUEST results storage area									
	Response code	No. of bytes sent	—	—	—	—	—	—	—	—

	0	1	2	3	4	5	6	7	8	9
D04000	TCP RECEIVE REQUEST command data									
	2712H	0001H	820FH	B400H	0064H	0000H	—	—	—	—

Timeout value: Not set
No. of bytes to receive: 100 bytes (0064_{hex})
Results storage area: Set to D04020 ($0FB4_{hex}$)
TCP socket number
Command code

	0	1	2	3	4	5	6	7	8	9
D04010	TCP RECEIVE REQUEST response									
	2712H	Response code	—	—	—	—	—	—	—	—
D04020	TCP RECEIVE REQUEST results storage area									
	Response code	No. of bytes received	Receive data: 100 bytes (0064_{hex})							

CIO Area

The following bits and flags are used to control CMND(490) execution. The bits in CIO 0000 are used to signal execution, the bits in CIO 0001 are used to signal errors, and the bits in CIO 0002 are used to control the program so that the instruction is executed only once.

	15 to 8	7	6	5	4	3	2	1	0
CIO 0000						TCP Receive Bit	TCP Send Bit	TCP Close Bit	TCP Open Bit
CIO 0001						TCP Receive Error Flag	TCP Send Error Flag	TCP Close Error Flag	TCP Open Error Flag
CIO 0002						TCP Receiving Flag	TCP Sending Flag	TCP Closing Flag	TCP Opening Flag

Programming Example

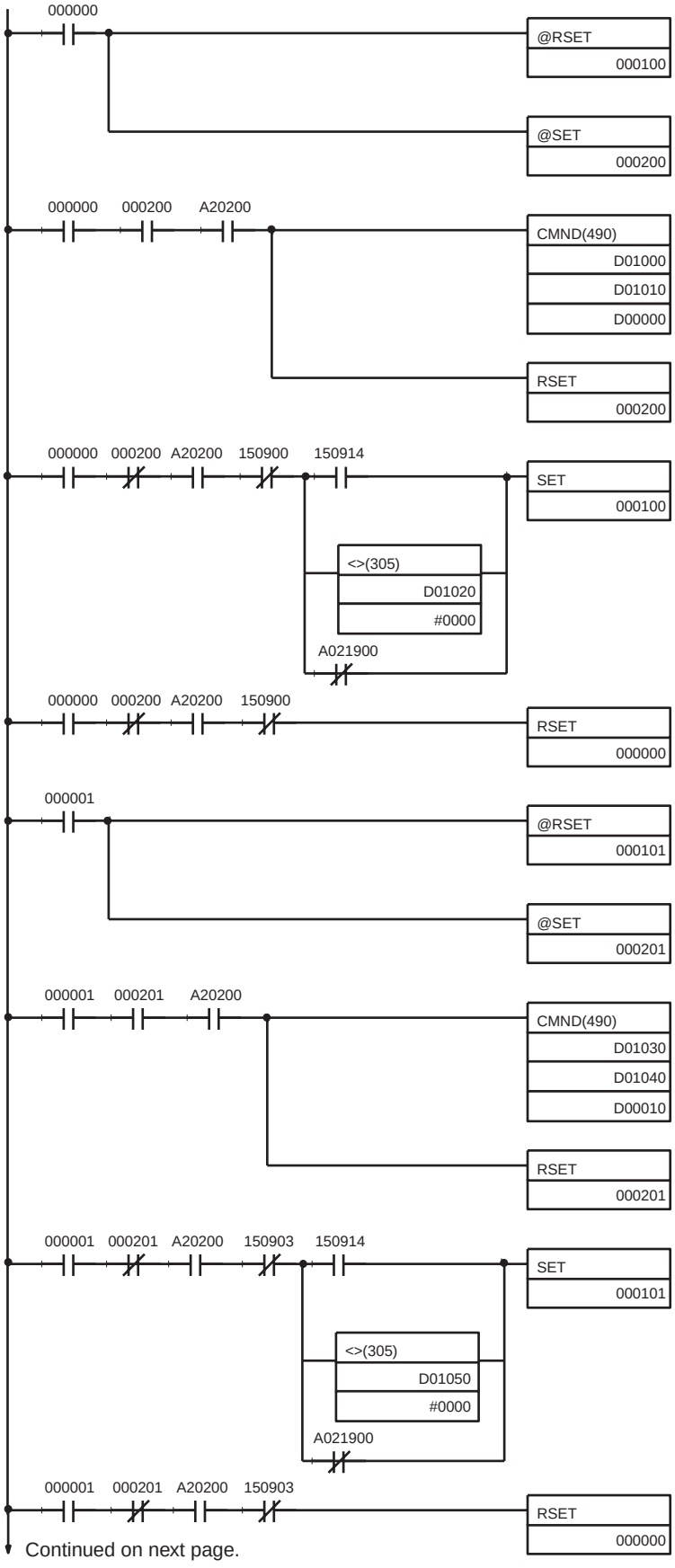

TCP Passive Open
When the TCP Open Bit (CIO 000000) turns ON, the TCP Open Error Flag (CIO 000100) is turned OFF and the TCP Opening Flag (CIO 000200) is turned ON to initialize processing.

When the TCP Opening Flag (CIO 000200) turns ON, the status of the Port Enabled Flag (A20200) is checked to be sure it is ON and a PASSIVE TCP OPEN REQUEST command is sent using CMND(490).
D01000: First command word
D01010: First response word
D00000: First control data word

The TCP Opening Flag (CIO 000200) is also turned OFF.

If the Port Enabled Flag (A20200) turns ON and the Opening Flag (CIO 150900) turns OFF while the TCP Opening Flag (CIO 000200) is OFF, checks are made and if any of the following are true, the TCP Open Error Flag (CIO 000100) is turned ON.

The Results Storage Error Flag (CIO 150914) is ON.

The contents of the Response Storage Area set in the command code (D01020) is not 0000 Hex (normal end).

The Network Communications Error Flag (A21900) is ON.

After the execution results have been checked, the TCP Open Bit (CIO 000000) is turned OFF.

TCP Close
When the TCP Close Bit (CIO 000001) turns ON, the TCP Close Error Flag (CIO 000101) is turned OFF and the TCP Closing Flag (CIO 000201) is turned ON to initialize processing.

When the TCP Closing Flag (CIO 000201) turns ON, the status of the Port Enabled Flag (A20200) is checked to be sure it is ON and a TCP CLOSE REQUEST command is sent using CMND(490).
D01030: First command word
D01040: First response word
D00010: First control data word

The TCP Closing Flag (CIO 000201) is also turned OFF.

If the Port Enabled Flag (A20200) turns ON and the Closing Flag (CIO 150903) turns OFF while the TCP Closing Flag (CIO 000201) is OFF, checks are made and if any of the following are true, the TCP Close Error Flag (CIO 000101) is turned ON.

The Results Storage Error Flag (CIO 150914) is ON.

The contents of the Response Storage Area set in the command code (D01050) is not 0000 Hex (normal end).

The Network Communications Error Flag (A21900) is ON.

After the execution results have been checked, the TCP Close Bit (CIO 000001) is turned OFF.

Continued on next page.

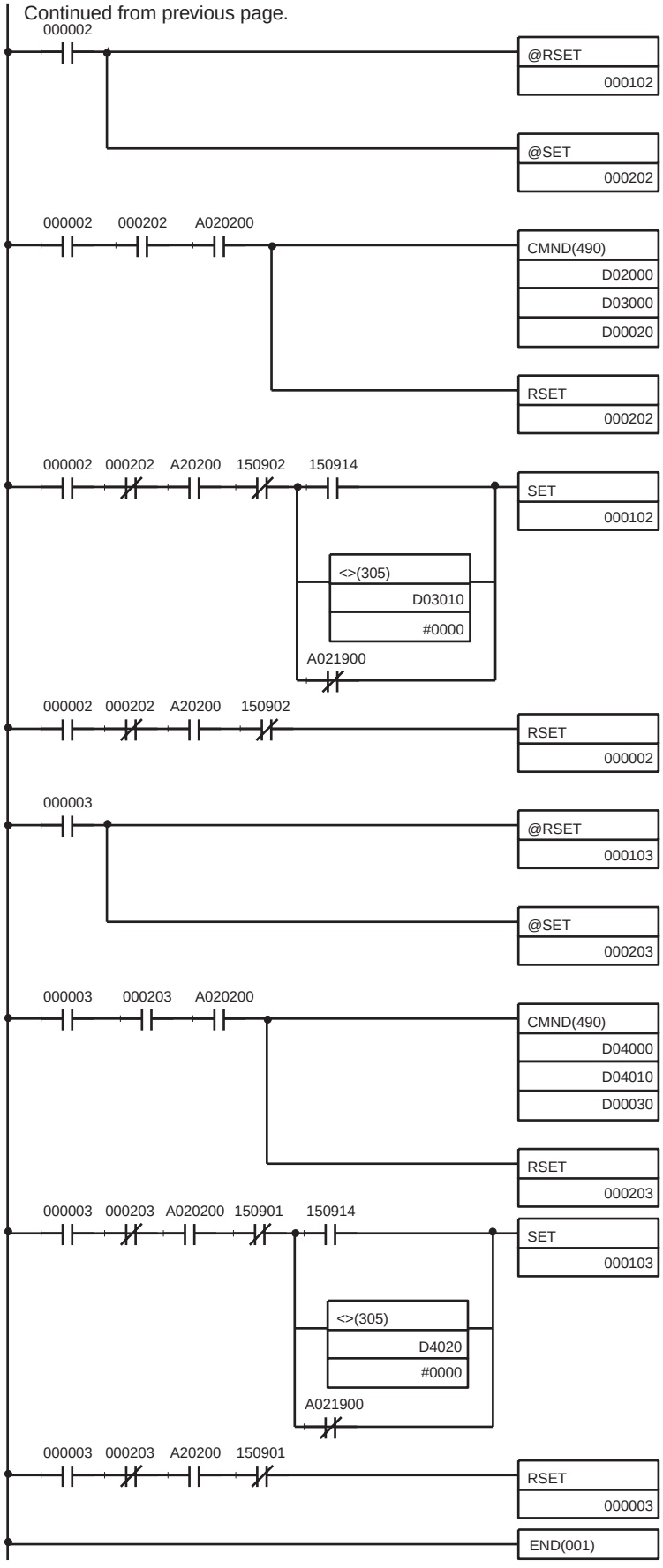

TCP Send
When the TCP Send Bit (CIO 000002) turns ON, the TCP Send Error Flag (CIO 000102) is turned OFF and the TCP Sending Flag (CIO 000202) is turned ON to initialize processing.

When the TCP Sending Flag (CIO 000202) turns ON, the status of the Port Enabled Flag (A20200) is checked to be sure it is ON and a TCP SEND REQUEST command is sent using CMND(490).
D02000: First command word
D03000: First response word
D00020: First control data word

The TCP Sending Flag (CIO 000202) is also turned OFF.

If the Port Enabled Flag (A20200) turns ON and the Sending Flag (CIO 150902) turns OFF while the TCP Sending Flag (CIO 000202) is OFF, checks are made and if any of the following are true, the TCP Send Error Flag (CIO 000102) is turned ON.

The Results Storage Error Flag (CIO 150914) is ON.

The contents of the Response Storage Area set in the command code (D03010) is not 0000 Hex (normal end).

The Network Communications Error Flag (A21900) is ON.

After the execution results have been checked, the TCP Send Bit (CIO 000002) is turned OFF.

TCP Receive
When the TCP Receive Bit (CIO 000003) turns ON, the TCP Receive Error Flag (CIO 000103) is turned OFF and the TCP Receiving Flag (CIO 000203) is turned ON to initialize processing.

When the TCP Receiving Flag (CIO 000203) turns ON, the status of the Port Enabled Flag (A20200) is checked to be sure it is ON and a TCP RECEIVE REQUEST command is sent using CMND(490).
D04000: First command word
D04010: First response word
D00030: First control data word

The TCP Receiving Flag (CIO 000203) is also turned OFF.

If the Port Enabled Flag (A20200) turns ON and the Receiving Flag (CIO 150901) turns OFF while the TCP Receiving Flag (CIO 000203) is OFF, checks are made and if any of the following are true, the TCP Receive Error Flag (CIO 000103) is turned ON.

The Results Storage Error Flag (CIO 150914) is ON.

The contents of the Response Storage Area set in the command code (D04020) is not 0000 Hex (normal end).

The Network Communications Error Flag (A21900) is ON.

After the execution results have been checked, the TCP Receive Bit (CIO 000003) is turned OFF.

Note When using the above programming example, change the bit and word addresses as necessary to avoid using the same areas used by other parts of the user program or the CPU Bus Unit.

6-3-6 UDP/IP Communications Programming Example

The following programming example illustrates transferring 100 bytes of data between an Ethernet Unit and a host computer using UDP/IP communications.

System Configuration

The system configuration for the program example and the Ethernet Unit system setup are shown below.

IP address:	196.36.32.55	IP address:	196.36.32.101
Port number:	4096	Port number:	4096
		FINS network address:	01 Hex
		Node address:	01 Hex
		Unit number:	10 Hex

Basic Operations

- CIO 000000 is turned ON to request opening a UDP socket from the Ethernet Unit.
- CIO 000001 is turned ON to request closing the UDP socket from the Ethernet Unit.
- CIO 000002 is turned ON to request sending data from the Ethernet Unit. Data (100 bytes) is sent beginning at D02008.
- CIO 000003 is turned ON to request receiving data from the Ethernet Unit. The data that is received (100 bytes) is stored beginning at D04025.
- One of the bits between CIO 000100 and CIO 000103 will turn ON if an error occurs. Refer to *6-2-2 Response Codes* for information on errors. The following areas can be used to access details about errors:

  CMND(490) response codes
  Response codes in results storage area
  Network Communications Error Flags (A21900 to A21907)
  Completion codes (A203 to A210)

Program Memory Maps

The send and receive data and bits (flags) used by the program are shown in the following diagrams.

DM Area

	0	1	2	3	4	5	6	7	8	9
D00000	CMND(490) control data for UDP OPEN REQUEST									
	000AH	0004H	0001H	0110H	0000H	0032H	—	—	—	—

Response monitor time: 5 s
FINS communications port: Port #0
Remote Ethernet Unit designation
Network address: 01_{hex}
Node number: 01_{hex}
Unit address: 10_{hex}
Number bytes to receive: 4 bytes
Number of bytes to send: 10 bytes ($000A_{hex}$)

	0	1	2	3	4	5	6	7	8	9
D00010	CMND(490) control data for UDP CLOSE REQUEST									
	0008H	0004H	0001H	0110H	0000H	0032H	—	—	—	—

Number bytes to receive: 4 bytes
Number of bytes to send: 8 bytes

	0	1	2	3	4	5	6	7	8	9
D00020	CMND(490) control data for UDP SEND REQUEST									
	0074H	0004H	0001H	0110H	0000H	0032H	—	—	—	—

Number bytes to receive: 4 bytes
Number of bytes to send: 114 (0072_{hex}) bytes
Command format = 14 bytes + 100 bytes send data

	0	1	2	3	4	5	6	7	8	9
D00030	CMND(490) control data for UDP RECEIVE REQUEST									
	000CH	0004H	0001H	0110H	0000H	0032H	—	—	—	—

Number bytes to receive: 4 bytes
Number of bytes to send: 12 bytes ($000C_{hex}$)
Number of bytes received is specified in command data.

	0	1	2	3	4	5	6	7	8	9
D01000	UDP OPEN REQUEST command data									
	2701H	0001H	8203H	FC00H	1000H	—	—	—	—	—

Local port number: set to 4096 (1000_{hex})
Results storage area: set to D01020 ($03FC_{hex}$)
(Refer to page 198 for details on formats for socket services)
UDP socket number (Ethernet Unit socket number): set to 1
Command code

	0	1	2	3	4	5	6	7	8	9
D01010	UDP OPEN response									
	2701H	Response code	—	—	—	—	—	—	—	—

Stores the response after command execution.

	0	1	2	3	4	5	6	7	8	9
D01020	UDP OPEN REQUEST results storage area									
	Response code	—	—	—	—	—	—	—	—	—

	0	1	2	3	4	5	6	7	8	9
D1030	UDP CLOSE REQUEST command data									
	2704H	0001H	8204H	1A00H	—	—	—	—	—	—

Results storage area: set to D01050 ($041A_{hex}$)
UDP socket number closed: set to 1 (0001_{hex})
Command code

	0	1	2	3	4	5	6	7	8	9
D01040	UDP CLOSE REQUEST response									
	2704H	Response code			—	—	—	—	—	—
D01050	UDP CLOSE REQUEST results storage area									
	Response code	—	—	—	—	—	—	—	—	—

	0	1	2	3	4	5	6	7	8	9
D02000	UDP SEND REQUEST command data									
	2703H	0001H	820BH	C200H	C424H	2037H	1000H	0064H	—	—

No. of send bytes: 100 bytes (0064_{hex})
Remote port: Port #4096 (1000_{hex})
Remote address: 196.36.32.55
($C4_{hex}.24_{hex}.20_{hex}.37_{hex}$)
Results storage area: Set to D03010 ($0BC2_{hex}$)
UDP socket number
Command code

	0	1	2	3	4	5	6	7	8	9
D03000	UDP SEND REQUEST response									
	2703H	Response code	—	—	—	—	—	—	—	—
D03010	UDP SEND REQUEST results storage area									
	Response code	No. of send bytes	—							

	0	1	2	3	4	5	6	7	8	9
D04000	UDP RECEIVE REQUEST command data									
	2702H	0001H	820FH	B400H	0064H	0000H	—	—	—	—

Timeout value: Not set
No. of bytes to receive: 100 bytes (0064_{hex})
Results storage area: set to D04020 ($0FB4_{hex}$)
UDP socket number used
Command code

	0	1	2	3	4	5	6	7	8	9
D04010	UDP RECEIVE REQUEST response									
	2702H	Response code	—	—	—	—	—	—	—	—
D04020	UDP RECEIVE REQUEST results storage area									
	Response code	Source IP address		Source port number	No. of bytes to receive	Receive data: 100 bytes (0064_{hex})				

CIO Area

The following bits and flags are used to control CMND(490) execution. The bits in CIO 0000 are used to signal execution, the bits in CIO 0001 are used to signal errors, and the bits in CIO 0002 are used to control the program so that the instruction is executed only once.

	15 to 8	7	6	5	4	3	2	1	0
CIO 0000						UDP Receive Bit	UDP Send Bit	UDP Close Bit	UDP Open Bit
CIO 0001						UDP Receive Error Flag	UDP Send Error Flag	UDP Close Error Flag	UDP Open Error Flag
CIO 0002						UDP Receiving Flag	UDP Sending Flag	UDP Closing Flag	UDP Opening Flag

Programming Example

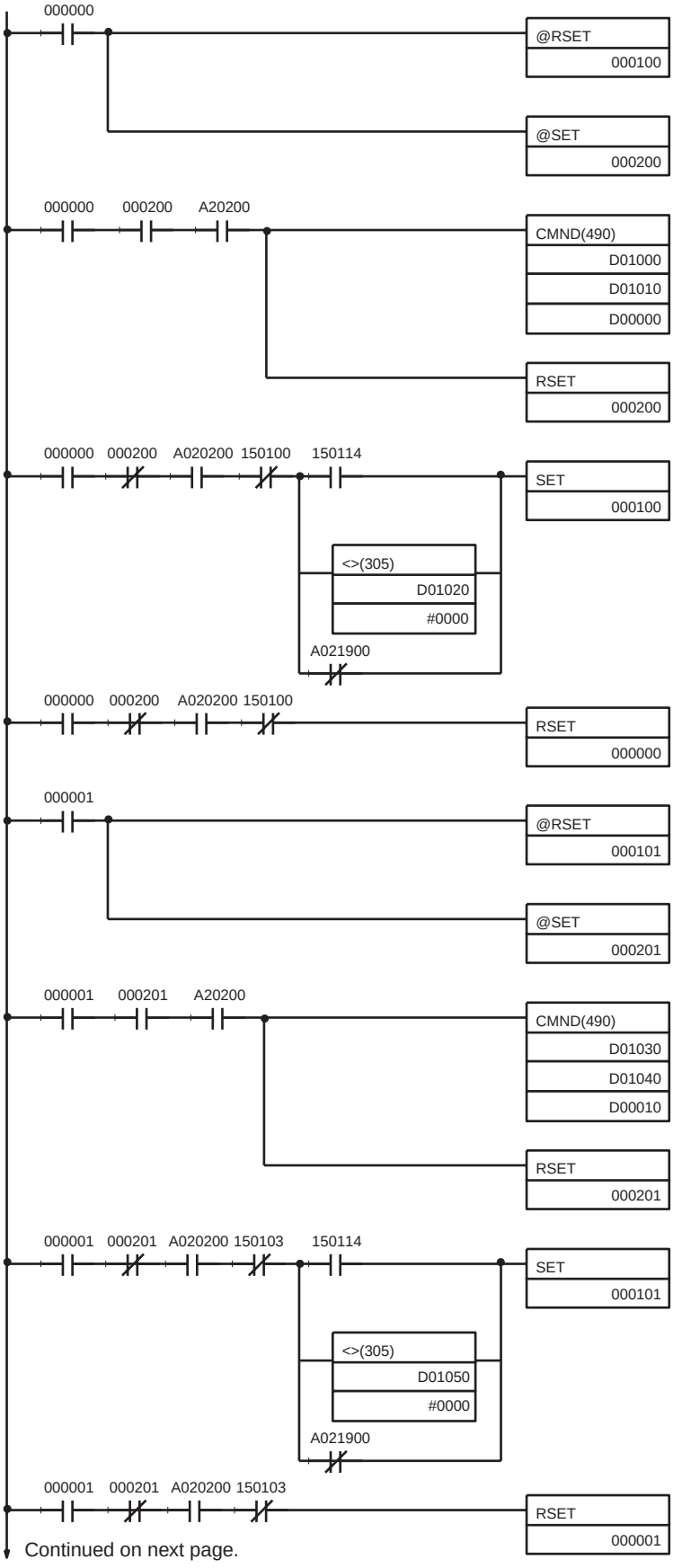

UDP Open
When the UDP Open Bit (CIO 000000) turns ON, the UDP Open Error Flag (CIO 000100) is turned OFF and the UDP Opening Flag (CIO 000200) is turned ON to initialize processing.

When the UDP Opening Flag (CIO 000200) turns ON, the status of the Port Enabled Flag (A20200) is checked to be sure it is ON and a UDP OPEN REQUEST command is sent using CMND(490).
D01000: First command word
D01010: First response word
D00000: First control data word

The UDP Opening Flag (CIO 000200) is also turned OFF.

If the Port Enabled Flag (A20200) turns ON and the Opening Flag (CIO 150100) turns OFF while the UDP Opening Flag (CIO 000200) is OFF, checks are made and if any of the following are true, the UDP Open Error Flag (CIO 000100) is turned ON.

The Results Storage Error Flag (CIO 150114) is ON.

The contents of the Response Storage Area set in the command code (D01020) is not 0000 Hex (normal end).

The Network Communications Error Flag (A21900) is ON.

After the execution results have been checked, the UDP Open Bit (CIO 000000) is turned OFF.

UDP Close
When the UDP Close Bit (CIO 000001) turns ON, the UDP Close Error Flag (CIO 000101) is turned OFF and the UDP Closing Flag (CIO 000201) is turned ON to initialize processing.

When the UDP Closing Flag (CIO 000201) turns ON, the status of the Port Enabled Flag (A20200) is checked to be sure it is ON and a UDP CLOSE REQUEST command is sent using CMND(490).
D01030: First command word
D01040: First response word
D00010: First control data word

The UDP Closing Flag (CIO 000201) is also turned OFF.

If the Port Enabled Flag (A20200) turns ON and the Closing Flag (CIO 150103) turns OFF while the UDP Closing Flag (CIO 000201) is OFF, checks are made and if any of the following are true, the UDP Close Error Flag (CIO 000101) is turned ON.

The Results Storage Error Flag (CIO 150114) is ON.

The contents of the Response Storage Area set in the command code (D01050) is not 0000 Hex (normal end).

The Network Communications Error Flag (A21900) is ON.

After the execution results have been checked, the UDP Close Bit (CIO 000001) is turned OFF.

Continued on next page.

Continued from previous page.

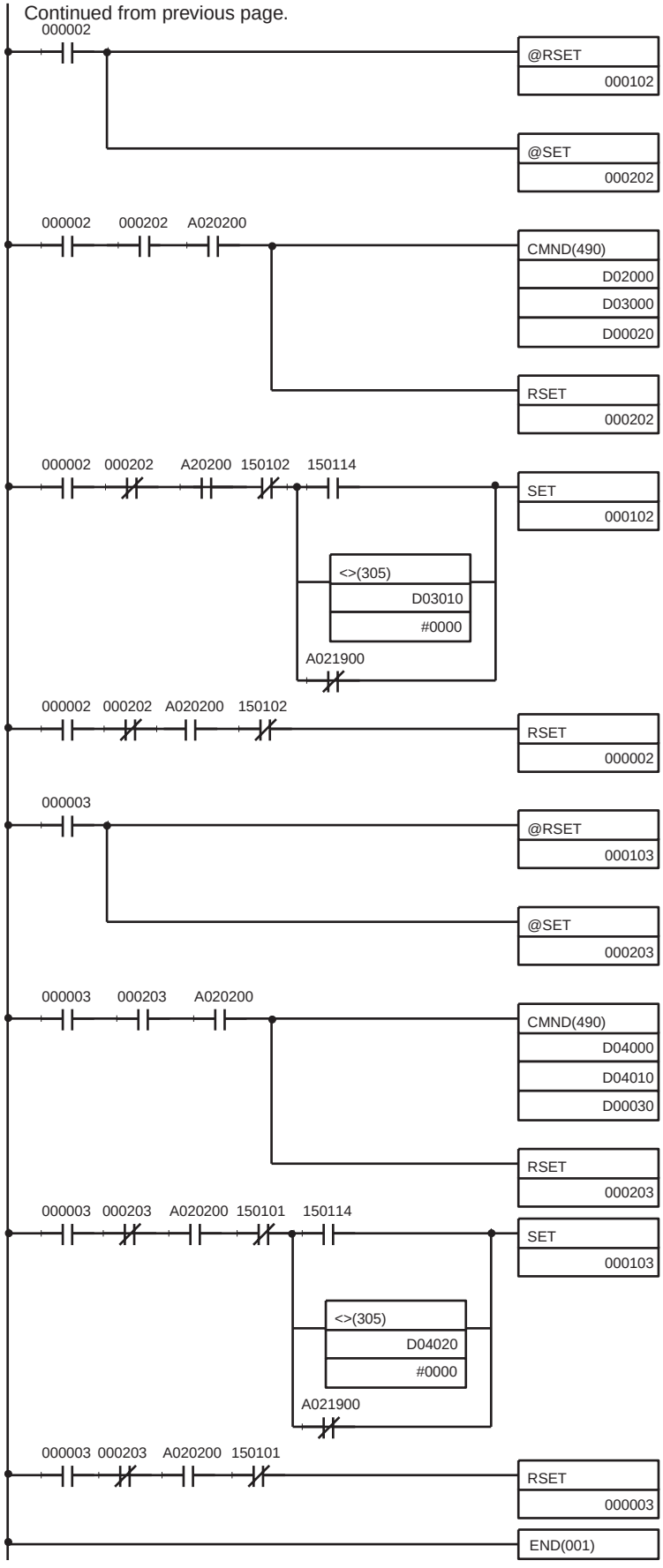

UDP Send

When the UDP Send Bit (CIO 000002) turns ON, the UDP Send Error Flag (CIO 000102) is turned OFF and the UDP Sending Flag (CIO 000202) is turned ON to initialize processing.

When the UDP Sending Flag (CIO 000202) turns ON, the status of the Port Enabled Flag (A20200) is checked to be sure it is ON and a UDP SEND REQUEST command is sent using CMND(490).
D02000: First command word
D03000: First response word
D00020: First control data word

The UDP Sending Flag (CIO 000202) is also turned OFF.

If the Port Enabled Flag (A20200) turns ON and the Sending Flag (CIO 150102) turns OFF while the UDP Sending Flag (CIO 000202) is OFF, checks are made and if any of the following are true, the UDP Send Error Flag (CIO 000102) is turned ON.

The Results Storage Error Flag (CIO 150114) is ON.

The contents of the Response Storage Area set in the command code (D03010) is not 0000 Hex (normal end).

The Network Communications Error Flag (A21900) is ON.

After the execution results have been checked, the UDP Send Bit (CIO 000002) is turned OFF.

UDP Receive

When the UDP Receive Bit (CIO 000003) turns ON, the UDP Receive Error Flag (CIO 000103) is turned OFF and the UDP Receiving Flag (CIO 000203) is turned ON to initialize processing.

When the UDP Receiving Flag (CIO 000203) turns ON, the status of the Port Enabled Flag (A20200) is checked to be sure it is ON and a UDP RECEIVE REQUEST command is sent using CMND(490).
D04000: First command word
D04010: First response word
D00030: First control data word

The UDP Receiving Flag (CIO 000203) is also turned OFF.

If the Port Enabled Flag (A20200) turns ON and the Receiving Flag (CIO 150101) turns OFF while the UDP Receiving Flag (CIO 000203) is OFF, checks are made and if any of the following are true, the UDP Receive Error Flag (CIO 000103) is turned ON.

The Results Storage Error Flag (CIO 150114) is ON.

The contents of the Response Storage Area set in the command code (D04020) is not 0000 Hex (normal end).

The Network Communications Error Flag (A21900) is ON.

After the execution results have been checked, the UDP Receive Bit (CIO 000003) is turned OFF.

Note When using the above programming example, change the bit and word addresses as necessary to avoid using the same areas used by other parts of the user program or the CPU Bus Unit.

SECTION 7
FTP Server

This section describes the functions provided by the FTP server.

7-1 Overview 162
7-2 Setting Login Names and Passwords 163
7-3 Using File Memory 163
7-4 FTP Server Application Example 167
7-5 Using FTP Commands 168
7-5-1 Table of Commands 168
7-5-2 Using the Commands 169
7-5-3 Error Messages and FTP Status 172
7-6 UNIX Application Example 174

7-1 Overview

The Ethernet Unit supports the server functions of FTP (file transfer protocol), a standard protocol in TCP/IP. A host computer functioning as an FTP client on the Ethernet can read or write individual files in a Memory Card mounted to the CPU Unit or in EM file memory.

Only one FTP client can connect at the same time.

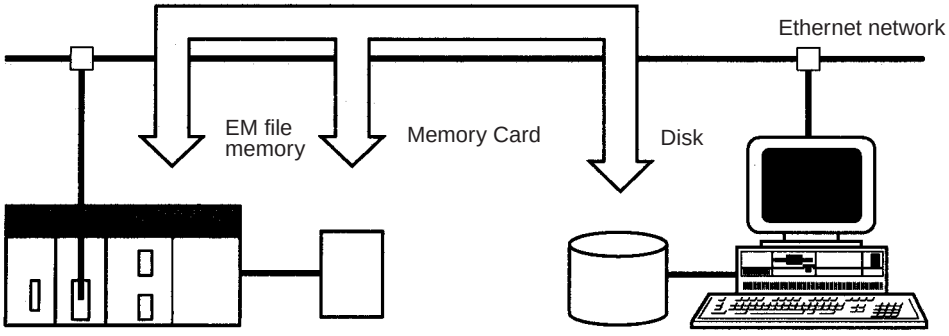

Note The PC, however, is unable to read or write files at other nodes using FTP because the Ethernet Unit does not support FTP client functions.

File System

The file system in the CPU Unit that can be accessed by the Ethernet Unit includes files in any Memory Card mounted in the CPU Unit and files in EM file memory. The directory tree is shown below.

/:	*root*
├── MEMCARD	*Memory card directory*
└── EM	*EM file memory directory*

A connection will be initially made to the root directory.

Note
1. The date of the MEMCARD directory displayed for `ls` or `dir` commands in the root directory will be the date of the file system volume label.
2. The login date will be displayed for EM files and for MEMCARD if a volume label has not been created.

Connecting to the FTP Server

The host computer must connect to the FTP server before the FTP server functions can be used. The login name and password set in the CPU Bus Unit Setup will be used when connecting (Refer to *4-2 CPU Bus Unit System Setup*.)

The FTP server in the Ethernet Unit can connect to only one client at a time. If a client attempts to connect when the FTP server is in use, a message will be returned and connection will be refused.

Login Messages

Status	Message
Normal connection	`220 xxx.xx.xx.xx yyyyyyyyyy FTP server (FTP Version z.zz) ready.` xxx.xx.xx.xx: IP address of Ethernet Unit yyyyyyyyyy: Ethernet Unit model number (CS1W-ETN01) z.zz: Firmware version of Ethernet Unit
FTP server busy	`221 FTP server busy, Goodbye.`

7-2 Setting Login Names and Passwords

The default FTP login name is “CONFIDENTIAL” and no password is required. Login is completed by typing only “CONFIDENTIAL”. A different login name and a password can be set as required using the CPU Bus Unit Setup.

Setting Restrictions

The following restrictions apply to login names and passwords.

- The login name and password must consist of alphanumeric characters, hyphens, and/or underscores. They are not case sensitive.
- A login name consists of 12 characters.
- A password consists of 8 characters.
- Always set a password when setting a new login name. The login name will not be valid unless a password is set for it.
- If a login name is not set or contains illegal characters, the default login name, CONFIDENTIAL, must be used. No password is required and any password that is set will be ignored.

Setting Method

A new login name and password can be set in the CPU Bus Unit Setup using the Unit settings on the CX-Programmer.

Note The CPU Bus Unit Setup is not contained in I/O memory, but in a parameter area. The Setup cannot be written using instructions or edited as I/O memory. Settings can be made only with the CX-Programmer.

Refer to the *CX-Programmer User’s Manual* for actual setting methods.

7-3 Using File Memory

There are two media that can be used to store files in memory for CS/CJ-series PCs:

- Memory Cards
- EM File Memory

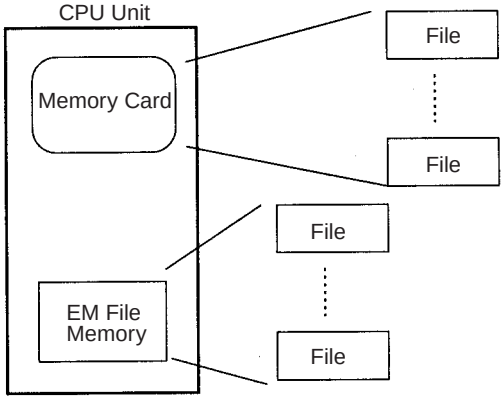

File Memory

Media	Memory type	Capacity	Model	File data recognized by CPU Unit
CS/CJ-series Memory Cards	Flash memory	8 MB	HMC-EF861	• Complete user program • Specified portions of I/O Memory • Parameter area data (e.g. PC Setup)
		15 MB	HMC-EF171	
		30 MB	HMC-EF371	
EM File Memory	RAM	Max. capacity of EM Area in CPU Unit	All EM Area banks from specified bank in I/O Memory (specified in PC Setup)	

Note The HMC-AP001 PC Card Adapter can be used to mount a Memory Card in a PC card slot on a computer.

File Types

The MS-DOS file format is used, allowing the files to be handled as normal files on a Windows-based computer.

File Names

Files are distinguished by assigning file names and extensions. The following characters can be used in file names and extensions:

Alphanumeric characters: A to Z and 0 to 9. (Names converted to all-caps)
! & $ # ’ [ ] - ^ ( ) _

The following characters cannot be used in files names and extensions:

, . / ? * ” : ; << > = + *(spaces)*

File names are not case sensitive and will be converted to all-caps in the PC file system. File names can be up to 8 character long with 3-character extensions. An error will occur if a file name or extension is too long. The first period (.) in a file name will be taken as the delimiter between the file name and extension. Extensions are determined by the file type.

Directories

Up to five levels of directories (including root as the first level) can be created as file storage locations. A maximum of 65 characters can be used in directory names.

File Names Handled by CPU Unit

The files described in the following table can be read or written by the CPU Unit.

File type		File name	Extension	Contents	Description
Data file		********	.IOM	Specified ranges of I/O Memory	• Contains word (16-bit) data from a starting word through an end word in one memory area. • The following areas can be used: CIO, HR, WR, AR, DM, and EM.
Program file		********	.OBJ	Complete user program	• Contains all the programs for cyclic tasks and interrupt tasks, as well as task information for one CPU Unit.
Parameter area file		********	.STD	• PC Setup • Registered I/O tables • Routing tables • CPU Bus Unit Setup and other setup data	• Contains all of the parameter data for one CPU Unit. • There is no need for the user to distinguish the various types of data contained in the file. • The file can be automatically read to or written from the CPU Unit simply by specifying the extension (.STD)
Files transferred at startup	Data files	AUTOEXEC	.IOM	I/O Memory data for the specified number of words starting from D20000	• There does not necessarily need to be a data file in the Memory Card when the automatic file transfer function is used at startup. • The AUTOEXEC.IOM file always contains DM Area data starting at D20000. • All data in the file will be transferred to memory starting at D20000 at startup.
	Program files	AUTOEXEC	.OBJ	Complete user program	• There must be a program file in the Memory Card when the automatic file transfer function is used at startup. • Contains all the programs for cyclic tasks and interrupt tasks, as well as task information for one CPU Unit.
	Parameter area file	AUTOEXEC	.STD	• PC Setup • Registered I/O tables • Routing tables • CPU Bus Unit Setup and other setup data	• There must be a parameter file in the Memory Card when the automatic file transfer function is used at startup. • Contains all of the parameter data for one CPU Unit. • There is no need for the user to distinguish the various types of data contained in the file. • All parameters in the file will be automatically transferred to specified locations in memory at startup.

Note

1. Refer to information on file memory in the *CS/CJ-series Programmable Controllers Operation Manual* (W339).
2. All files transferred automatically at startup must have the name AUTOEXEC.

Initializing File Memory

Memory	Initialization method
Memory Cards	1. Insert the Memory Card into the CPU Unit. 2. Initialize the Memory Card from a Programming Device (Programming Consoles included).
EM File Memory	1. Specify in the PC Setup the first bank to convert to file memory. 2. Initialize EM File Memory from the CX-Programmer.

Data File Format

The format of data files (files with .IOM extensions) is shown in the following diagram.

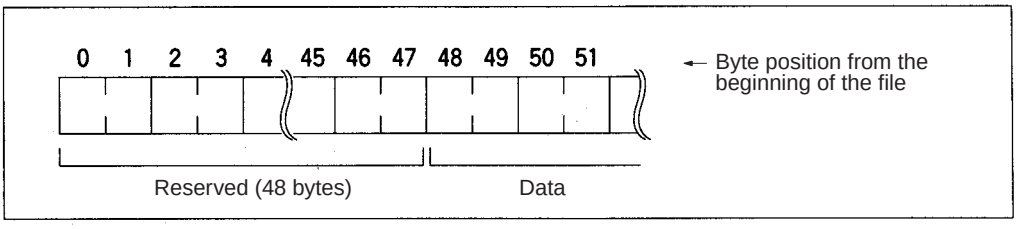

Set the reserved bytes to all zeros (00 Hex).

Writing Data Files via FTP

In this example, the `put` command (see page 171) is used to write the following data to a file called DMDATA.IOM on a Memory Card, and then the READ DATA FILE instruction (FREAD(700)) is used to write 5 words of data from the beginning of the DMDATA.IOM file to D00000 to D00004.

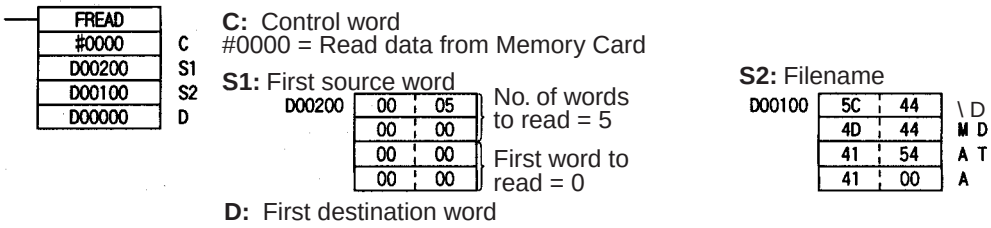

Contents of DMDATA.IOM Data File

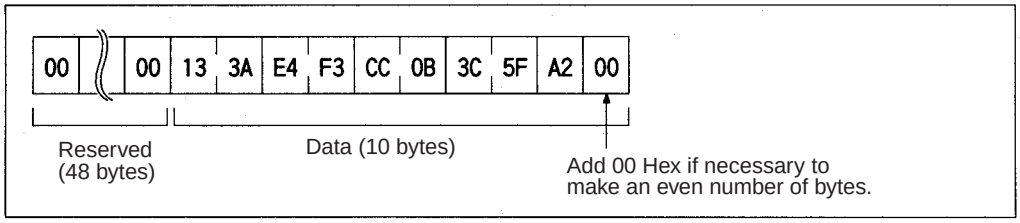

Data Read from File

Word	Contents
D00000	133A
D00001	E4F3
D00002	CC0B
D00003	3C5F
D00004	A200

Note

1. FREAD(700) will not be able to read the last byte in a file if the files contains an odd number of bytes. Add 00 Hex to the end of the file if necessary to make an even number of bytes.
2. The UM and DM Areas contain binary data. Set the data type to binary using the `type` command (see page 170) before reading or writing files using FTP.
3. Refer to the *CS/CJ-series Programmable Controllers Programming Manual* (W340) for information on the File Memory Instructions.

7-4 FTP Server Application Example

The following procedure shows how to use the FTP server by connection with the default login name, CONFIDENTIAL. No password is required.

Note The login name and a password must be set in the CPU Bus Setup for the Ethernet Unit in the CPU Unit to use any login name other than CONFIDENTIAL.

1,2,3...

1. Make sure that a Memory Card is inserted in the CPU Unit and turn ON the power supply to the PC.
2. If EM File Memory is to be used, create the EM File Memory.
3. Connect to the FTP server from a computer on the Ethernet by entering the text that is underlined in the following diagram.

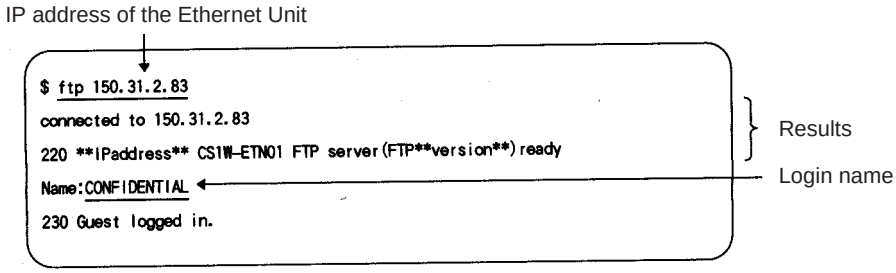

4. Enter FTP commands (underlined in the following diagram) to read and write files. The following directory tree is used in this example

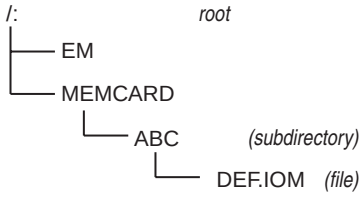

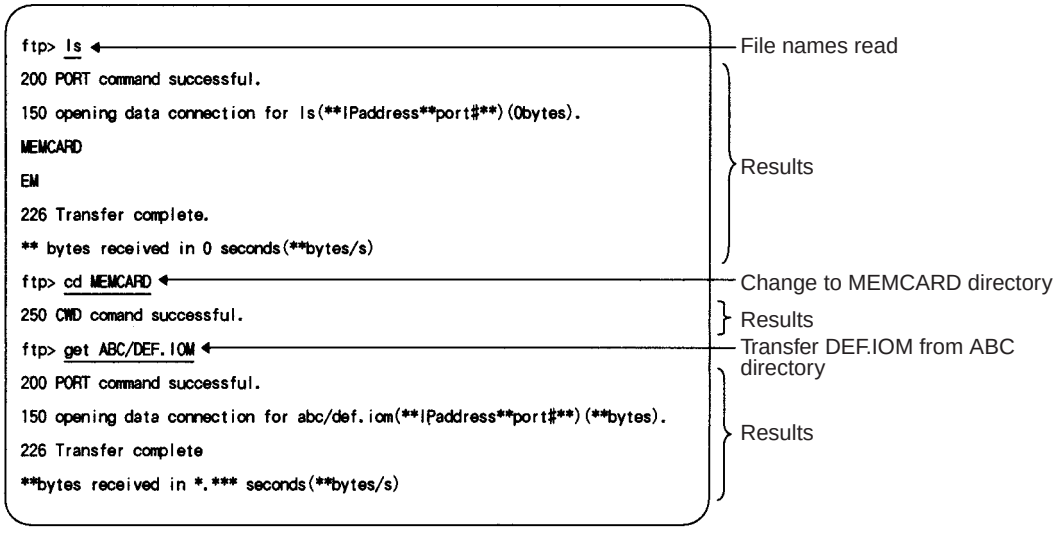

Note

1. The current status of the FTP server can be obtained from the service status in the words allocated to the Ethernet Unit in the CPU Bus Unit Area in the CIO Area. The first word allocated to the Ethernet Unit is n and is computed as follows: n = 1500 + (25 x unit number)

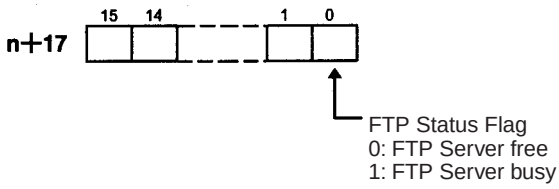

2. The FTP server can handle only one command at a time.
3. Do not simultaneously write a file with the same name to the same file device in a CPU Unit from more than one Ethernet Unit or ladder diagram program. Exclusive control is not performed.

7-5 Using FTP Commands

This section describes the FTP commands which the host computer (FTP client) can send to the Ethernet Unit's FTP server. The descriptions should also apply to most UNIX workstations, but slight differences may arise. Refer to your workstation's operation manuals for details.

7-5-1 Table of Commands

The FTP commands which can be sent to the Ethernet Unit are listed in the following table.

Command	Description
`open`	Connects the specified host FTP server.
`user`	Specifies user name for the remote FTP server.
`ls`	Displays the Memory Card file names.
`dir`	Display the Memory Card file names and details.
`rename`	Changes a file name.
`mkdir`	Creates a new directory in the working directory in the remote host.
`rmdir`	Deletes a new directory from the working directory in the remote host.
`cd`	Changes the Ethernet Unit work directory to the specified directory.
`cdup`	Changes the working directory at the remote host to the parent directory.
`pwd`	Displays the Ethernet Unit work directory.
`type`	Specifies the data type of transferred files.
`get`	Transfers the specified file from the Memory Card to the local host.
`mget`	Transfers multiple files from the Memory Card to the local host.
`put`	Transfers the specified local file to the Memory Card.
`mput`	Transfers multiple local files to the Memory Card.
`delete`	Deletes the specified file from the Memory Card.
`mdelete`	Deletes multiple files from the Memory Card.
`close`	Disconnects the FTP server.
`bye`	Closes the FTP (client).
`quit`	Closes the FTP (client).

- The Ethernet Unit is considered to be the remote host and the host computer (FTP client) is considered to be the local host.
- A remote file is a file on the Memory Card or in EM File Memory in the CPU Unit. A local file is one in the host computer (FTP client).
- The parent directory is the directory one above the working directory.

7-5-2 Using the Commands

open

Format `open [IP_address or host_name_of_FTP_server]`

Function Connects the FTP server. Normally when the FTP client is booted, the FTP server IP address is specified to execute this command automatically.

user

Format `user [user_name]`

Function Specifies the user name. Specify the FTP login name set in the Ethernet Unit system setup. The default FTP login name is “CONFIDENTIAL.”

If a non-default login name is used, it must be followed by the password. In this case, enter the FTP password set in the system setup.

The user name is automatically requested immediately after connection to the FTP server.

ls

Format `ls [-l] [REMOTE_FILE_NAME [local_file_name]]`

Function Displays the remote host (Memory Card or EM File Memory) file names.

Set the switch [-l] to display not only the file names but the creation date and size as well. If the switch is not set, only the file names will be displayed.

You can specify a file name in the Memory Card or EM File Memory if desired.

If a local file name is specified, the file information will be stored in the specified file in the host computer.

Example `ls /`

dir

Format `dir [REMOTE_FILE_NAME [local_file_name]]`

Function Displays the file names, date created, and size of the files in the remote host (Memory Card or EM File Memory). It displays the same information as command “ls –l”.

Specify a file name in the Memory Card or EM File Memory as the remote file name.

If a local file name is specified, the file information is stored in the specified file in the host computer.

Example `dir /`

rename

Format `rename CURRENT_FILE_NAME NEW_FILE_NAME`

Function Changes the specified current file name to the specified new file name.

`rename` can be used only to change the file name. It cannot be used to move the file to a different directory.

mkdir

Format `mkdir DIRECTORY_NAME`

Function Creates a directory of the specified name at the remote host (Memory Card or EM File Memory).

An error will occur if a file or directory of the same name already exists in the working directory.

rmdir

Format `rmdir` *`DIRECTORY_NAME`*

Function Deletes the directory of the specified name from the remote host (Memory Card or EM File Memory).

The directory must be empty to delete it.

An error will occur if the specified directory does not exist or is empty.

pwd

Format `pwd`

Function Displays the remote host's (Ethernet Unit) current work directory.

cd

Format `cd` [*`directory_name`*]

Function Changes the remote host (Ethernet Unit) work directory to the specified remote directory.

The files in the Memory Card are contained in the MEMCARD directory under the root directory (/). The files in EM File Memory are contained in the EM directory under the root directory (/). The root directory (/) is the directory used when logging into the Ethernet Unit. No MEMCARD directory will exist if a Memory Card is not inserted in the PC or if the Memory Card power indicator is not lit. No EM directory will exist if EM File Memory does not exist.

cdup

Format `cdup`

Function Changes the working directory at the remote host to the parent directory (one directory above the current working directory).

type

Format `type` *`data_type`*

Function Specifies the file data type. The following data types are supported:

ascii: Files are transferred as ASCII data
binary (image): Files are transferred as binary data.

All files are treated by the PC as binary files. Before reading or writing any files, always use the `type` command to set the file type to binary. File contents cannot be guaranteed if transferred as ASCII data.

The default file type is ASCII.

get

Format `get` *`FILE_NAME`* [*`receive_file_name`*]

Function Transfers the specified remote file from the Memory Card or EM File Memory to the local host.

A receive file name can be used to specify the name of the file in the local host.

mget

Format `mget` *`FILE_NAME`*

Function Allows the use of a wildcard character (*) to transfer multiple remote files from the Memory Card or EM File Memory to the local host.

put

Format `put` *`file_name`* [*`DESTINATION_FILE_NAME`*]

Function Transfers the specified local file to the remote host (Memory Card or EM File Memory).

A destination file name can be used to specify the name the file is stored under in the Memory Card or EM File Memory.

Any existing file with the same name in the remote host (Memory Card or EM File Memory) will be overwritten by the contents of the transferred file.

If an error occurs during file transfer, the file being transferred will be deleted and the transmission will end in an error.

mput

Format `mput` *`FILE_NAME`*

Function Allows the use of a wildcard character (*) to transfer multiple local files to the remote host (Memory Card or EM File Memory).

Any existing file with the same name in the remote host (Memory Card or EM File Memory) will be overwritten by the contents of the transferred file.

If an error occurs during file transfer, the file being transferred will be deleted and the transmission of that file will end in an error. However, mput execution will continue and remaining files will be transferred.

delete

Format `delete` *`FILE_NAME`*

Function Deletes the specified remote file from the Memory Card or EM File Memory.

mdelete

Format `mdelete` *`FILE_NAME`*

Function Allows the use of a wildcard character (*) to delete multiple remote files from the Memory Card or EM File Memory.

close

Format `close`

Function Disconnects the Ethernet Unit's FTP server.

bye

Format `bye`

Function Ends the FTP (client).

quit

Format `quit`

Function Ends the FTP (client).

7-5-3 Error Messages and FTP Status

Error Messages

The error messages returned by the Ethernet Unit are listed in the following table.

Message	Meaning
PPP is a directory.	The path name indicated at PPP is a directory.
PPP is not a directory.	The path name indicated at PPP is not a directory.
Another unit has access authority (FINS error 0 x 3001)	Another Unit currently has the access right.
Bad sequence of commands.	The RNFR command has not been executed.
Can't create data socket (X.X.X.X, YY)	A socket cannot be created.
Cannot access a device (FINS error 0 x 250F).	A file device error has occurred.
Cannot get memory blocks.	A message memory block cannot be allocated.
Command format error (FINS error 0 x 1003).	The command format is incorrect.
Connect error.	A connection error has occurred.
Directories of the old and the new paths are not same.	The directories before and after changing the name are different.
Directory name length exceeded max. size.	The directory name is too long.
Directory not empty (FINS error 0 x 2108).	The directory must be empty to delete it.
Fatal error (FINS error 0 x 1101).	A parameter error has occurred.
Fatal error (FINS error 0 x 1103).	
File or directory already exists.	The specified file or directory name already exists.
File or directory already exists (FINS error 0 x 2107).	
File or directory name illegal.	The file or directory name is incorrect.
File or directory name illegal (FINS error 0 x 110C).	
File read error (FINS error 0 x 1104).	An error occurs when reading the file.
File read error (FINS error 0 x 110B).	
File write error (FINS error 0 x 2106).	An error occurs when reading the file.
File write error (FINS error 0 x 2107).	
FINS error MRES 0 x XX: SRES 0 x XX.	Some other FINS error has occurred.
Length of directory name too long.	The path name of the directory is too long.
No space to create entry (FINS error 0 x 2103).	There are too many files to create a new one.
No such device (FINS error 0 x 2301).	The file device cannot be found.
No such file or directory.	The specified file or directory does not exist.
No such file or directory (FINS error 0 x 2006).	
No such file or directory (FINS error 0 x 2106).	
No enough memory.	The communications buffers are full.
Not enough space in the system. (FINS error 1104).	The file device is full.
PLC communication error (timeout).	File access timed out.
Socket canceled.	The socket was canceled.
Socket error NN.	A socket bind error occurred. The error code will be given at NN.
Socket receive error NN.	A data reception error occurred. The error code will be given at NN.
Socket send error NN.	A data send error occurred. The error code will be given at NN.
Timeout (900 seconds): closing control connection.	The connection was closed because the client did not respond for 15 minutes.
Too many open files.	Too many sockets have been created.
Write access denied.	Writing is not possible.
Write access denied. (FINS error 0 x 2101).	

PPP: Path name
XXX: IP address
YY: Port number
MM: FINS error code
NN: Socket error code

Checking FTP Status

Note

1. File operations for files on the Memory Card are performed during FTP communications. Do not remove the Memory Card or turn OFF power to the PC while FTP is being used.
2. When using File Memory Instruction from the program in the CPU Unit, program exclusive control using the FTP Status Flag so that the same data is not manipulated simultaneously by more than one instruction.

FTP Status Flag

The current status of the FTP server can be obtained from the service status in the words allocated to the Ethernet Unit in the CPU Bus Unit Area in the CIO Area. The word containing the FTP Status Flag can be computed as follows: 1500 + (25 x unit number) + 17

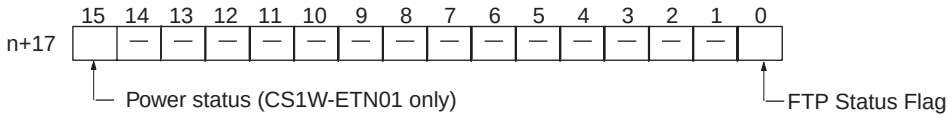

Status of bit 00	Meaning
1	FTP server busy
0	FTP server free

Note The FTP status can also be checked using the software switch settings on the CX-Programmer.

FTP Indicator

The FTP indicator on the Ethernet Unit indicates FTP status as shown in the following table.

FTP indicator	Meaning
Lit	FTP server busy
Not lit	FTP server free

FTP File Transfer Time

File transfers using FTP can require up to 5 or 10 minutes depending on the capacity of the file. Approximate file transfer time are provided in the following table for reference.

All times are in seconds unless otherwise specified.

File system		Memory Card		EM File Memory	
CPU Unit status	Operating mode	PROGRAM	RUN	PROGRAM	RUN
	Cycle time	---	20 ms	---	20 ms
Transfers using `put`	1 KB	3	17	1	3
	30 KB	10	53	5	24
	60 KB	17	91	11	52
	120 KB	31	173	24	128
Transfers using `get`	1 KB	1	2	1	1
	30 KB	6	22	4	14
	60 KB	10	43	9	37
	120 KB	19	100	22	113

Note

1. The above times assume that the peripheral servicing time setting in the PC Setup is set to the default value of 4%.

2. If the peripheral servicing time setting in the PC Setup is increased, FTP files will be transferred faster.

7-6 UNIX Application Example

The following procedure provides an example of FTP operations from a UNIX workstation. In this example, the following assumptions are made.

- The IP address of the Ethernet Unit is registered in /etc/hosts on the workstation as “cs1”.
- The default FTP login name is being used (CONFIDENTIAL).
- A processing results data file called RESULT.IOM already exists on the Memory Card in the CPU Unit.
- A processing instructions data file called PLAN.IOM already exists on the workstation.

The following procedure transfers the processing results file RESULT.IOM from the Memory Card in the CPU Unit to the workstation and then the processing instructions file PLAN.IOM is transferred from the workstation to the Memory Card in the CPU Unit.

Underlined text is keyed in from the FTP client. The workstation prompt is indicated as $ and the cursor is indicated as ■.

1,2,3... 1. Start FTP and connect to the Ethernet Unit.

```
$ ftp cs1  ··· FTP started.
connected to cs1
220 **IPaddress** CS1W-ETN01 FTP server(FTP**version**)ready
Name(cs1:root):■
```

2. Enter the login name.

```
Name(cs1:root):CONFIDENTIAL  ··· Login name
230 Guest logged in.
ftp> ■
```

3. Make sure the Memory Card is inserted. The MEMCARD directory will be displayed if there is a Memory Card in the CPU Unit.

```
ftp> ls  ··· Used to check for Memory Card.
200 PORT command successful.
150 opening data connection for ls(**IPaddress**port#**)(0 bytes).
MEMCARD
226 Transfer complete.
15 bytes received in 0 seconds(**bytes/s)
ftp> ■
```

4. Change to the MEMCARD directory.

```
ftp> cd MEMCARD  … Change to MEMCARD directory.
250 CWD command successful.
ftp> ■
```

5. Change data type to binary.

```
ftp> type binary  … Binary data type set.
200 Type set to I.
ftp>■
```

6. Transfer the file RESULT.IOM to the workstation.

```
ftp> get RESULT.IOM  … File read.
200 PORT command successful.
150 opening data connection for result.iom (**IPaddress**port#**) (**bytes).
226 Transfer complete.
** bytes received in *.*** seconds (**bytes/s)
ftp> ■
```

7. Write the file PLAN.IOM to the Memory Card.

```
ftp> put PLAN.IOM  … File written
200 PORT command successful.
150 opening data connection for plan.iom (**IPaddress**port#**) .
226 Transfer complete.
** bytes received in *.** seconds (**bytes/s)
ftp> ■
```

8. End FTP.

```
ftp> bye  … FTP ended.
221 Goodbye.
$ ■
```

SECTION 8
Mail

This section explains the Ethernet Unit's mail function.

8-1 Overview of Mail Function 178
8-1-1 Mail Contents 179
8-1-2 Mail Triggers 180
8-1-3 Sending Mail. 180
8-1-4 Mail Status 181
8-2 Sending Mail 182
8-3 Mail Example 182

8-1 Overview of Mail Function

The mail function can be used to send user-created information, error log information, and status information as e-mail to an address set in the CPU Bus Unit System Setup. Mail can be triggered in any of the following ways:

- When an error is registered to the error log.
- At regular intervals.
- When a dedicated control switch is turned ON.

Note A mail server is required in order to use the mail function. Mail server settings require specialized knowledge and should always be handled by the network administrator. Be sure you have a clear understanding of the mail system before using this function. Mail delivery is not guaranteed. Depending on factors such as the condition of the network, mail that has been sent may not arrive at its destination.

8-1-1 Mail Contents

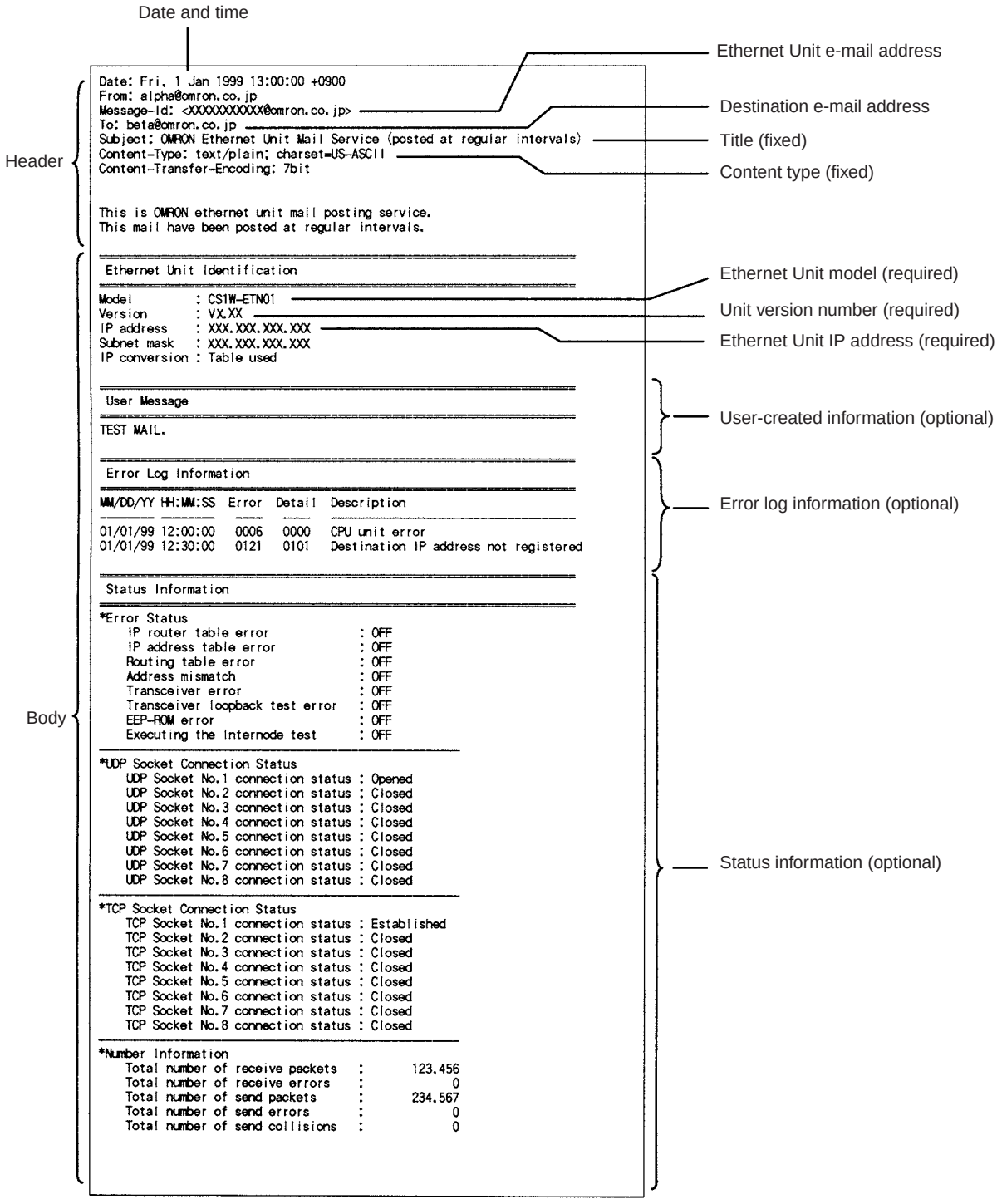


```
Date: Fri, 1 Jan 1999 13:00:00 +0900
From: alpha@omron.co.jp
Message-Id: <XXXXXXXXXXX@omron.co.jp>
To: beta@omron.co.jp
Subject: OMRON Ethernet Unit Mail Service (posted at regular intervals)
Content-Type: text/plain; charset=US-ASCII
Content-Transfer-Encoding: 7bit

This is OMRON ethernet unit mail posting service.
This mail have been posted at regular intervals.
```

```
Ethernet Unit Identification
Model        : CS1W-ETN01
Version      : VX.XX
IP address   : XXX.XXX.XXX.XXX
Subnet mask  : XXX.XXX.XXX.XXX
IP conversion : Table used
```

```
User Message
TEST MAIL.
```

```
Error Log Information
MM/DD/YY HH:MM:SS  Error  Detail  Description
01/01/99 12:00:00  0006   0000   CPU unit error
01/01/99 12:30:00  0121   0101   Destination IP address not registered
```

```
Status Information
*Error Status
    IP router table error              : OFF
    IP address table error             : OFF
    Routing table error                : OFF
    Address mismatch                   : OFF
    Transceiver error                  : OFF
    Transceiver loopback test error    : OFF
    EEP-ROM error                      : OFF
    Executing the Internode test       : OFF

*UDP Socket Connection Status
    UDP Socket No.1 connection status : Opened
    UDP Socket No.2 connection status : Closed
    UDP Socket No.3 connection status : Closed
    UDP Socket No.4 connection status : Closed
    UDP Socket No.5 connection status : Closed
    UDP Socket No.6 connection status : Closed
    UDP Socket No.7 connection status : Closed
    UDP Socket No.8 connection status : Closed

*TCP Socket Connection Status
    TCP Socket No.1 connection status : Established
    TCP Socket No.2 connection status : Closed
    TCP Socket No.3 connection status : Closed
    TCP Socket No.4 connection status : Closed
    TCP Socket No.5 connection status : Closed
    TCP Socket No.6 connection status : Closed
    TCP Socket No.7 connection status : Closed
    TCP Socket No.8 connection status : Closed

*Number Information
    Total number of receive packets   :      123,456
    Total number of receive errors    :            0
    Total number of send packets      :      234,567
    Total number of send errors       :            0
    Total number of send collisions   :            0
```

Header

The following header information is attached.

- Subject: OMRON Ethernet Unit Mail Service
- Content-Type: text/plain;charset=US-ASCII
- Content-Transfer-Encoding: 7 bit

Ethernet Unit Information

The following Ethernet Unit information is always attached to the mail.

- Model

- Version
- IP address (decimal notation)
- Subnet mask (decimal notation)
- ID address conversion method

Optional Information

The optional information that can be sent is shown in the following table. Different information can be selected with each mail trigger, and it is also possible to make multiple selections. (The selections are specified in the CPU Bus Unit System Setup.) If not even one is selected, however, no e-mail will be sent even when the trigger condition is met.

Item	Contents
User-created information	User-created information is data set by the user, in ASCII, in the CPU Unit's memory. A maximum of 1,024 bytes of data is sent from the user-created information address set in the CPU Bus Unit Area. If there is a null code (00 Hex) in the data, however, only the data up to that point will be sent. The data set by the user is sent just as it is, and the code is not converted. The relevant words are always read by the Ethernet Unit, so the contents of the mail can be changed by changing the contents of the words.
Error log information	The error log information includes the entire error log in RAM. A maximum of 64 records can be saved. For details, refer to *10-3 Error Log*.
Status information	The following data is sent. (1) Open/closed status of UDP sockets 1 to 8 (2) TCP status of TCP sockets 1 to 8 (3) Unit error information (4) Counter information • Total number of receive packets • Total number of receive errors • Total number of send packets • Total number of send errors • Total number of send collisions

The Ethernet Unit processes error log and status data in ASCII so that it can be easily read as e-mail.

Note Set user-created information in ASCII.

8-1-2 Mail Triggers

The user can select any of the following trigger conditions for e-mail. The designation is made in the CPU Bus Unit System Setup. The particular information to be sent can be selected individually for each trigger condition.

Name	Trigger condition	Contents
User mail	When Mail Send Switch turns ON.	Mail is sent when the Mail Send Switch set in the words allocated to the CPU Bus Unit in the CIO Area turns from OFF to ON (leading edge).
Error mail	When an error is recorded in the error log.	Mail is sent when an error occurs and is recorded in the error log.
Periodic mail	Fixed time intervals	Mail is sent each time the interval set in the CPU Bus Unit Area elapses. The interval can be set to anything from 10 minutes to 10 days.

8-1-3 Sending Mail

Triggered by Mail Send Switch

To send mail only as required, use the Mail Send Switch (bit 3) from among the Unit Control Switches in the CIO Area words allocated to the CPU Bus Unit. When the Ethernet Unit detects that the Mail Send Switch has turned

ON, the mail transmission is started according to the mail settings that have previously been made in the CPU Bus Unit System Setup.

If a transmission is restarted while the mail processing is still in progress, it will be invalid. After the transmission has been completed, the Ethernet Unit will automatically turn the switch OFF again. Once the switch has been turned OFF, another mail message can be sent.

Unit Control Switches: CIO 1500 + (25 x unit number)

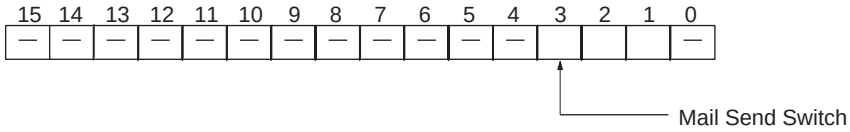

Triggered by Error Log Recording

If there is a need for immediate notification when an error occurs, e-mail can be sent at the same time as an error is recorded in the error log. When an error to be recorded in the error log occurs, the e-mail transmission is started according to the mail settings that have previously been made in the CPU Bus Unit System Setup.

Note If several errors in a row are recorded in the error log, the notification of these errors may all be included in the same e-mail message.

Triggered at Regular Intervals

If there is a need to periodically check the Ethernet Unit's status, e-mail can be sent at regular intervals. With this method, e-mail is sent at fixed time intervals according to the mail interval and mail information settings in the CPU Bus Unit System Setup.

Note After the mail processing has been completed, the next e-mail will be sent when the fixed time interval elapses. There may be discrepancies in the transmission intervals if the Ethernet Unit status causes the processing to take more time.

8-1-4 Mail Status

The mail status is reflected in the Mail Status areas in the CPU Bus Unit words allocated in the DM Area. It can be checked as required.

Mail Status: D30000 + (100 x unit number)

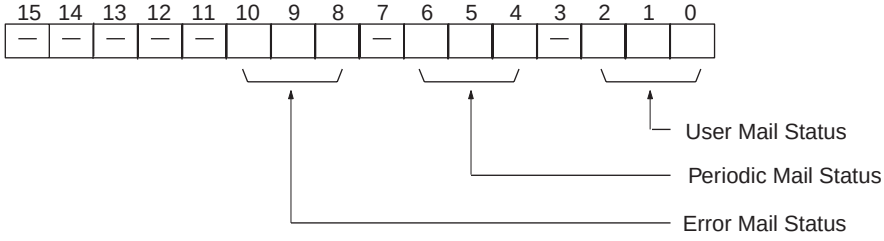

Bits			Status
2	**1**	**0**	
6	**5**	**4**	
10	**9**	**8**	
0	0	0	Waiting for mail, or mail ready to send according to Mail Send Switch, or no mail is being sent.
0	0	1	Mail being processed.
0	1	0	Waiting for mail, or mail ready to send according to Mail Send Switch. Previous mail transmission completion was normal.
1	1	0	Waiting for mail, or mail ready to send according to Mail Send Switch. Previous mail transmission completion was abnormal.
1	1	1	Mail cannot be sent (due to System Setup error).

Note 0: OFF; 1: ON

8-2 Sending Mail

The procedure for sending mail is as follows:

1,2,3...

1. Make the following settings in the CPU Bus Unit System Setup.
   - Mail send information
   - Mail timing
   - User-created mail data address
   - SMTP server address
   - Local mail address
   - Destination mail address
2. Turn ON the Mail Send Switch (word n, bit 3) in the allocated CIO Area words.

8-3 Mail Example

This section shows how to use the mail function, taking as an example the settings and operations involved in sending user mail. The mail send function settings are performed in the CPU Bus Unit System Setup using the Unit settings on the CX-Programmer. Only the settings are covered here. For details on CX-Programmer operations, refer to the *CX-Programmer User's Manual*.

1,2,3...

1. Use the CX-Programmer, a Programming Device for the PC, to make the initial mail settings in the CPU Bus Unit System Setup in the CPU Unit. For the purposes of this example, make the settings shown below. (For details regarding the CPU Bus Unit System Setup, refer to *4-2-2 Mail Settings*.)
   - User mail: Send user-created information and status information.
   - Error mail: Not used.
   - Periodic mail: Not used.

Settings

- User mail: Enabled (selected)
- User mail status information transmission: Enabled (selected) (Leave all other check boxes for mail settings not selected.)
- User-created mail data address: DM00200 (See below.)
- Ethernet Unit mail address
- Destination mail address
- SMTP server address (mail server IP address)

From DM00200 onwards, store data to be sent as mail (user-created information) in ASCII as shown below.

	15 … 8	7 … 0
DM00200	53 (S)	79 (y)
DM00201	73 (s)	74 (t)
DM00202	65 (e)	6D (m)
DM00203	31 (1)	20 ( )
DM00204	69 (i)	73 (s)
DM00205	20 ( )	77 (w)
DM00206	6F (o)	72 (r)
DM00207	6B (k)	69 (i)
DM00208	6E (n)	67 (g)
DM00209	00	

2. Turn ON the Mail Send Switch in the CIO Area words allocated to the CPU Bus Unit.

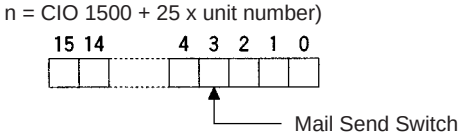

For Unit #5, for example, the Mail Send Switch address is CIO 162503.

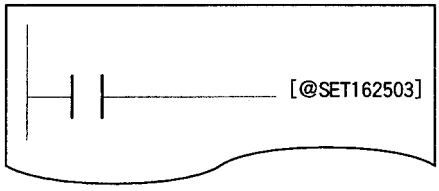

The status, such as mail being processed, and so on, is reflected in the User Mail Status Area in the DM Area words allocated to the CPU Bus Unit. Check the status as required.

User Mail Status: D30000 + (100 x unit number) + 17, bits 0 to 2

Bits			Status
2	**1**	**0**	
0	0	0	Waiting for mail, or mail ready to send according to Mail Send Switch, or no mail is being sent.
0	0	1	Mail being processed.
0	1	0	Waiting for mail, or mail ready to send according to Mail Send Switch. Previous mail transmission completion was normal.
1	1	0	Waiting for mail, or mail ready to send according to Mail Send Switch. Previous mail transmission completion was abnormal.
1	1	1	Mail cannot be sent (due to System Setup error).

Note 0: OFF; 1: ON

SECTION 9
Testing Communications

This section describes functions that allow you to test communications.

9-1 Communications Testing Functions 186
9-2 PING Command 186
9-2-1 Ethernet Unit. 186
9-2-2 Host Computer 186
9-3 Internode Test 187
9-3-1 Running the Test. 187
9-3-2 Checking Results 189

9-1 Communications Testing Functions

The Ethernet Unit provides two functions that allow communications with other node to be tested.

PING Command

The PING command is a common way to perform echoback tests on Ethernet networks. The PING command can be executed to see if nodes are physically connected properly and to be sure that IP address are set for the correct Ethernet nodes.

Internode Testing

Echoback tests with specific nodes can also be performed by setting parameters in the DM Area and then manipulating specific bits in memory. This type of internode test can be performed only for remote nodes that support the FINS internode testing function. Internode testing can be used to make sure settings for FINS communications services are correct.

9-2 PING Command

The PING command sends an echo request packet to a remote node and receives an echo response packet to confirm that the remote node is communicating correctly. The PING command uses the ICMP echo request and responses. The echo response packet is automatically returned by the ICMP.

The PING command is normally used to check the connections of remote nodes when configuring a network. The Ethernet Unit supports both the ICMP echo request and reply functions.

If the remote node returns a normal response to the PING command, then the nodes are physically connected correctly and Ethernet node settings are correct.

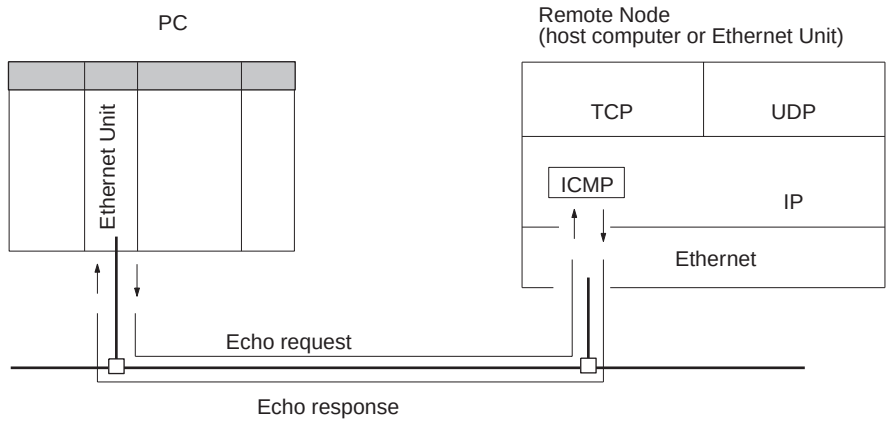

9-2-1 Ethernet Unit

The Ethernet Unit automatically returns the echo response packet in response to an echo request packet sent by another node (host computer or other Ethernet Unit). An echo request packet can be sent to another node by issuing the FINS command to execute the PING command from the PC. Refer to page 236 for details on the PING command.

9-2-2 Host Computer

The PING command can be executed from the host computer to send an echo request packet to an Ethernet Unit. The method for using the PING command from a UNIX computer is given next.

Method

Input the following at the host computer prompt ($):

$ ping *IP_address(host_name)*

The destination is specified by its IP address or host name. If the host name is used, the host name must be defined in file /etc/hosts.

Note The PING command is not supported by some host computers.

Application Examples

These examples show sending the PING command to the node at IP address 130.25.36.8. The "$" on the example screen represents the host computer prompt. User inputs are underlined. Comments are placed after semicolons.

Normal Execution

```
$ ping 130.25.36.8                          ; Executes PING command
PING 130.25.36.8: 56 data bytes
64 bytes from 130.25.36.8: icmp_seq=0. time=0.ms
64 bytes from 130.25.36.8: icmp_seq=0. time=0.ms
       .            .            .
       .            .            .
       .            .            .
64 bytes from 130.25.36.8: icmp_seq=0. time=0.ms
←Enter Ctrl+C Key to cancel.
----130.25.36.8 PING Statistics----
9 packets transmitted, 9 packets received, 0% packets loss
round-trip (ms) min/avg/max = 0/1/16
$
```

Abnormal Execution

```
$ ping 130.25.36.8                          ; Executes PING command
PING 130.25.36.8: 56 data bytes
←Enter Ctrl+C Key to cancel.
----130.25.36.8 PING Statistics----
9 packets transmitted, 0 packets received, 100% packets loss
$
```

Refer to operating system documentation for your host computer for details about using the host computer's PING command.

9-3 Internode Test

The internode test sends data to and from specified nodes and uses the responses to check the network. The Ethernet Unit has a built-in function to run the internode test.

If a normal response is returned for an internode test, it means that the settings for FINS communications services are correct. If a response is not received, execute the PING command for the same remote node to see if the Ethernet connection and settings are correct. If the PING command can be executed successfully, then the FINS settings, such as the routing tables, node addresses, or address conversion method, are incorrect.

9-3-1 Running the Test

The test parameters are set and the test is started and stopped by writing the required data to memory in the PC used to start the internode test. These setting are made using the a Programming Device, such as a Programming Console.

Test Procedure

1,2,3...

1. Write the test parameters into PC memory. The test parameters are described following this procedure.
2. Turn ON the Internode Test Start Switch allocated to the Ethernet Unit in the CPU Bus Unit Area. The Internode Test Start Switch is described following the test parameters. This will begin the internode test.
3. If desired, the test parameters can be changed while the internode test is actually running. Use the same procedure as used in step 1.
4. Turn OFF the Internode Test Start Switch allocated to the Ethernet Unit in the CPU Bus Unit Area to stop the test.

Note

1. The test parameters are effected as soon as they are set or changed. It is not necessary to reboot or restart. If the test parameters are changed during the test, however, the new parameters will not be used until the Internode Test Start Switch is turned OFF and then back ON.
2. Line traffic on the Ethernet network will increase during the test, possibly affecting system performance.

Setting the Test Parameters

Before starting the test, set the following parameters in the software switches in the words in the DM area allocated to the Ethernet Unit. The test parameters become effective immediately after they are set. It is not necessary to reboot or restart the PC.

Configuration of the Software Switches

The software switches are stored at offsets from the first word calculated with the formula: first word = D03000 + (100 x unit number).

Offset	Contents	
+0	Bits 8 to 15: Remote network address	Bits 0 to 7: Remote node number
+1	Number of send bytes	
+2	Response monitor time	

Setting Range

The parameter setting ranges are given in the following table.

Parameter	Range
Remote network address	00 Hex: Local network 01 to 7F Hex (1 to 127 decimal)
Remote node number	01 to 7E Hex (0 to 126 decimal)
Number of send bytes	0000 Hex specifies the max. length of 1,996 bytes. 0001 to 07CC Hex (1 to 1996 decimal)
Response monitor time (Unit: 10 ms)	0000 Hex specifies 2 s. 0001 to FFFF Hex (1 to 65535 decimal)

Note

1. The following limits apply to the number of bytes sent when running the test through a SYSMAC NET or SYSMAC LINK network:

   SYSMAC NET: 1,986 bytes
   SYSMAC LINK: 512 bytes
2. Broadcast transmissions (target node address = FF) cannot be used for the internode test.
3. A timeout error will occur if no response is received within the set response monitor time.

Starting and Stopping the Internode Test

Bit 01 of the first word in the words allocated to the Ethernet Unit in the CPU Bus Unit Area is used as the Internode Test Start Switch. Turn ON bit 01 to start the internode test and turn bit 01 OFF to stop the internode test. The address of the word containing the Internode Test Start Switch is calculated by the following formula:

Word = 1500 + (25 x unit number)

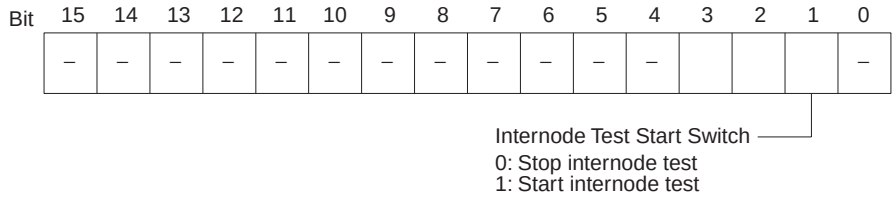

The internode test run status can be confirmed using the TS indicator on the Unit's front panel or the Internode Test Flag (error status, bit 8) in the allocated words in the CIO Area.

Error status area (1 word) = CIO 1500 + (25 × unit number) + 18

TS indicator	Internode Test Flag (error status, bit 8)	Run status
Lit	1	Internode test running
Not lit	0	Internode test stopped

9-3-2 Checking Results

The results of the internode test are stored in the fourth through ninth words of the portion of the CPU Bus Unit Area allocated to the Ethernet Unit. The status information area stores the test status and numbers of test runs and errors.

Test Status

The result of the test run and descriptions of errors are stored as the test status. The test status is stored at the word whose address is calculated by the following formula:

Word = D03000 + (100 x unit number) + 3

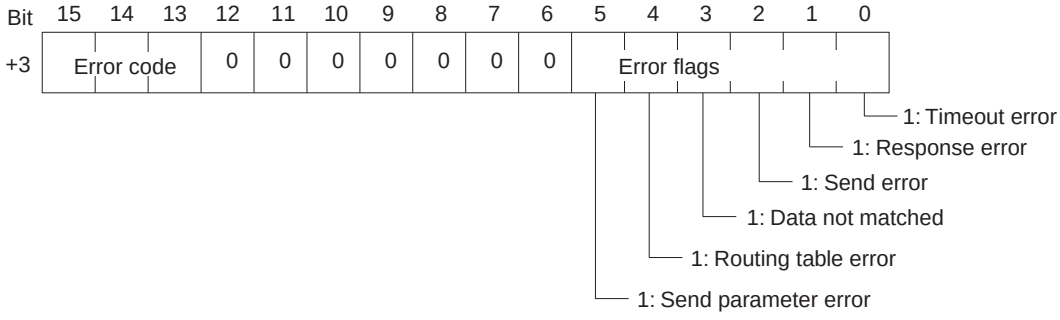

Error Code

If the test is run repeatedly, the code for the latest test results is stored.

Bit			Description
15	14	13	
0	0	0	Normal
0	0	1	Timeout error
0	1	0	Response (response code) error
0	1	1	Send error

Bit			Description
15	14	13	
1	0	0	Data not matched
1	0	1	Routing table error (See note.)
1	1	0	Send parameter error (See note.)

Note The internode test does not count errors when a routing table error or send parameter error has occurred.

Error Flags

The bits corresponding to errors are turned ON if errors occur. The flag status is maintained until the internode test is run again.

Number of Test Runs and Errors

The number of test runs and total errors from the time the test is started until it is stopped is stored. The configuration of this area is shown in the following table. Each result is stored at a word relative to the first word the address of which can be calculated using the following formula:

Word = D03000 + (100 x unit number) + 4 to +8

Offset	Contents
+4	Number of internode test runs
+5	Number of timeout errors
+6	Number of response errors
+7	Number of send errors
+8	Number of times data did not match

Note

1. The contents of the test status area and test runs/errors area are maintained until the internode test is run again.
2. When the number of tests counts to the maximum value (FFFF), subsequent internode test runs are counted from 0. However, the maximum value is maintained and further errors are not counted when the number of errors reaches the maximum value.

SECTION 10
Troubleshooting

This section describes information and procedures that can be used to troubleshoot problems that sometimes occur with Ethernet Unit and Ethernet communications.

The Ethernet Unit makes up part of a network. Repair a defective Ethernet Unit as soon as possible as it can have a negative effect on the entire network. We recommend that customers keep one or more spare Ethernet Units to allow immediate recovery of the network.

10-1 Troubleshooting with Indicators 192
10-2 Error Status 194
10-3 Error Log 194
10-4 Error Log Error Codes 195
10-5 Troubleshooting Procedures 197
10-5-1 Startup Problems 197
10-5-2 FINS Communications Problems (SEND(090)/RECV(098)/CMND(490)) 198
10-5-3 UDP Socket Problems 199
10-5-4 TCP Socket Problems 201
10-5-5 FTP Service Problems 202
10-5-6 Network Connection Problems 203
10-5-7 Mail Problems 205
10-6 Troubleshooting with Response Codes 207
10-7 Results Storage Area Response Codes 210

10-1 Troubleshooting with Indicators

The indicators on the Ethernet Unit can be used to troubleshoot some error. The probable cause and correction for errors that can be determined from the RUN, ERC, and ERH indicators are listed in the following table.

RUN	ERC	ERH	Probably cause	Correction
Not lit	Not lit	Not lit	Power is not being supplied to the CPU Unit or the power supply voltage is too low.	Supply power. Make sure that the correct voltage is being supplied.
			The Ethernet Unit is faulty.	Replace the Ethernet Unit.
			The CPU Unit or Backplane is faulty.	Replace the CPU Unit or the Backplane.
			The mounting screws on the Ethernet Unit are loose (CS Series) or the sliders are not properly locked into place (CJ Series).	Tighten the mounting screws to the specified torque (CS Series) or lock the sliders into place (CJ Series).
Not lit	Not lit	Lit	The unit number on the Ethernet Unit is not set correctly on the rotary switch.	Correct the unit number setting.
			The I/O tables are not registered in the CPU Unit.	Register the I/O tables.
			The same unit number is being used on another Unit as well.	Correct the unit number.
			The CPU Unit is faulty.	Restart the CPU Unit. If the problem persists, replace the CPU Unit.
Lit	---	Lit	There is a mistake in the CPU Bus Unit Setup or routing tables.	Read the error history and correct the data that is causing the error. If the problem persists, replace the CPU Unit.
			Memory in the CPU Unit is faulty.	Restart the CPU Unit. If the problem persists, replace the CPU Unit.
			The CPU Unit is faulty.	Restart the CPU Unit. If the problem persists, replace the CPU Unit.
Not lit	Lit	Not lit	The node address is set outside the correct range on the rotary switches.	Set the node number to between 01 and 7F Hex.
			The Ethernet Unit is faulty.	Restart the PC. If the problem persists, replace the Ethernet Unit.
Lit	Lit	---	An error occurred in EEPROM.	Restart the PC. If the problem persists, replace the Ethernet Unit.
Lit	Flashing	---	The IP address is set incorrectly on the rotary switches on the back of the Unit. (CS Series only)	Correct the IP address. Do not set any of the following IP addresses. • Host IDs that are all 0 or all 1. • Network IDs that are all 0 or all 1. • Subnetwork IDs that are all 1. • Addresses beginning with 127 (7F Hex).
			The node number set on the rotary switch on the front of the Unit does not agree with the host ID in the IP address. This probably can occur when the address conversion method is set for automatic address generation. (CS Series only)	Make sure that the node number and the last byte of the IP address are the same and set other host IDs to 0. Change the address conversion method.

RUN	ERC	ERH	Probably cause	Correction
Lit	---	Flashing	The IP address is set incorrectly on the rotary switches on the back of the Unit. (CJ Series only)	Correct the IP address. Do not set any of the following IP addresses. • Host IDs that are all 0 or all 1. • Network IDs that are all 0 or all 1. • Subnetwork IDs that are all 1. • Addresses beginning with 127 (7F Hex).
			The node number set on the rotary switch on the front of the Unit does not agree with the host ID in the IP address. This probably can occur when the address conversion method is set for automatic address generation. (CJ Series only)	Make sure that the node number and the last byte of the IP address are the same and set other host IDs to 0. Change the address conversion method.

10-2 Error Status

The Ethernet Unit will output error status to the following word in the CIO Area of the CPU Unit. This information can be used in troubleshooting errors.

Word = CIO 1500 + (25 x unit number) +18

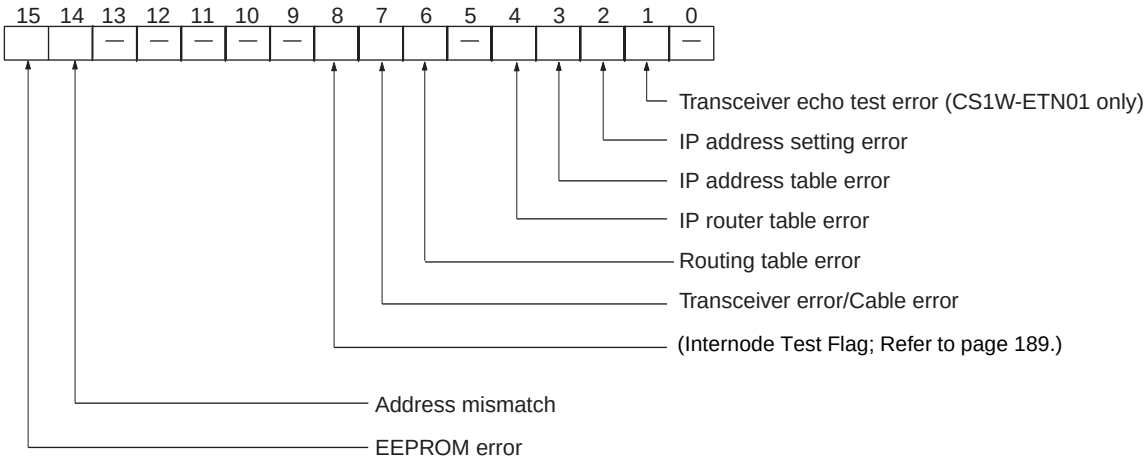

The corresponding bit will turn ON when an error occurs

Bit	Name	Correction
01	Transceiver echo test error (CS1W-ETN01 only)	Check the transceiver or transceiver cable.
02	IP address setting error	The following cannot be used as IP address settings. • Host IDs that are all 0 or all 1. • Network IDs that are all 0 or all 1. • Subnetwork IDs that are all 1. • Addresses beginning with 127 (7F Hex). Reset the IP address.
03	IP address table error	Correct the IP address table. If the problem persists, replace the CPU Unit.
04	IP router table error	Correct the IP router table. If the problem persists, replace the CPU Unit.
06	Routing table error	Correct the routing tables. If the problem persists, replace the CPU Unit.
07	CS1W-ETN01: Transceiver error CS1W-ETN11 and CJ1W-ETN11: Cable error	Check the transceiver, transceiver cable, or cable.
14	Address mismatch	Make sure that the node number and the last byte of the IP address are the same and set other host IDs to 0. Change the address conversion method.
15	EEPROM error	Restart the PC. If the problem persists, replace the Ethernet Unit.

10-3 Error Log

The Ethernet Unit provides an error log that records errors that have occurred during Ethernet Unit operation. The contents of the error log can be read or cleared from a Programming Device, such as the CX-Programmer, or it can be read or cleared using FINS commands from a workstation or computer. (See *11-3-7 ERROR LOG READ* and *11-3-8 ERROR LOG CLEAR*).

Logged Errors

The following errors are recorded in the error log.

- Errors in network operation
- Errors in data transfers
- Error in the CPU Unit

Error Log Table

Each error is recorded as one record in an error log table. Up to 64 records can be saved. If more than 64 errors occur, the oldest errors will be deleted from the error log and the most recent error will be recorded.

The following information is recorded in the error log table.

- Main error code (See table later in this section.)
- Detailed error code (See table later in this section.)
- Time stamp (from the clock in the CPU Unit)

Error Log Location

When an error is detected, the error codes and time stamp are recorded in the error log in RAM inside the Ethernet Unit. Serious errors are also recorded in EEPROM. The maximum number of errors that can be saved to EEPROM is 64 for the CS Series and 32 for the CJ Series. The errors recorded in EEPROM will be saved even if the Unit is restarted or power is turned OFF. When the Ethernet Unit is started, the contents of the error log in EEPROM is copied to RAM.

When a FINS command is used to read the error log, the log held in RAM is read. When a FINS command is used to clear the error log, the logs held in both RAM and EEPROM are cleared.

FINS Commands for Error Logs

The following FINS commands can be used to read or clear the error log. Refer to *Section 11 FINS Commands Addressed to Ethernet Units*.

Command code		Function
MRC	SRC	
21	02	ERROR LOG READ
	03	ERROR LOG CLEAR

10-4 Error Log Error Codes

The error codes are described in the following table. The detailed error code will provide detailed information on an error.

Error code	Meaning	Detailed error code		Correction	EE-PROM
		1st byte	2nd byte		
0001	Watchdog timer error in CPU Unit	00	00	Replace the CPU Unit.	Saved
0002	CPU Unit service monitor error	Monitor time (ms)		Check the operating environment.	Saved
0006	Other CPU error	Bit 11: Unit not in Registered I/O Tables		Create the I/O tables.	Saved
000F	CPU Unit initialization error	00	00	Replace the CPU Unit.	Saved
0010	Insufficient System Setup Area	00	00	Reduce the number of CPU Bus Units.	Saved
0011	Event timed out	MRC	SRC	Replace the CPU Unit.	Saved
0012	CPU Unit memory error	01: Read error 02: Write error	03: Routing table 04: Setup error 05: CPU Bus Unit Words (CIO/DM)	01: Recreate the data specified by the 2nd byte of the detailed error code. 02: Clear memory using procedure in the PC operation manual.	Saved
0013	CPU Unit protected	00	00	Remove protection from CPU Unit memory.	Saved

Error code	Meaning	Detailed error code		Correction	EE-PROM
		1st byte	2nd byte		
0103	Resend count exceeded (send failed)	Commands Bit 15: OFF Bits 08 to 14: SNA Bits 00 to 07: SA1 Responses Bit 15: ON Bits 08 to 14: DNA Bits 00 to 07: DA1		Check transceiver at remote node.	---
0105	Node address setting error (send failed)			Set the IP address correctly.	---
0107	Remote node not in network (send failed)			Check the connection to the remote node.	---
0108	No Unit with specified unit address (send failed)			Check the unit address at the remote node.	---
010B	CPU Unit error (send failed)			Troubleshoot the error in the CPU Unit using the PC operation manual.	---
010D	Destination address not in routing tables (send failed)			Set the destination address in the routing tables.	---
010E	No routing table entry (send failed)			Set the local node, remote node, and relay nodes in the routing tables.	---
010F	Routing table error (send failed)			Create the routing tables correctly.	---
0110	Too many relay points (send failed)			Reconstruct the network or correct the routing tables so that commands are sent to within a 3-level network range.	---
0111	Command too long (send failed)			Check the command format and set the correct command data.	---
0112	Header error (send failed)			Check the command format and set the correct command data.	---
0117	Internal buffers full; packet discarded			Change the network so that traffic is not concentrated.	---
0118	Illegal packet discarded			Check for nodes sending illegal packets.	---
0119	Local node busy (send failed)			Change the network so that traffic is not concentrated.	---
0120	Unexpected routing error			Check the routing tables.	---
0121	No setting in IP address table; packet discarded			Set the remote node in the IP address table.	---
0122	Service not supported in current mode; packet discarded			Select the IP address table or both methods for the address conversion method.	---
0123	Internal send buffer full; packet discarded			Change the network so that traffic is not concentrated.	---
0124	Maximum frame size exceeded; routing failed			Reduce the size of events.	---
021A	Logic error in setting table	00	01: Data link table 02: Network parameters 03: Routing tables 04: Setup 05: CPU Bus Unit Words (CIO/DM)	Recreate the data specified by the 2nd byte of the detailed error code.	Saved

Error code	Meaning	Detailed error code		Correction	EE-PROM
		1st byte	2nd byte		
0300	Parameter error; packet discarded	Commands Bit 15: OFF Bits 08 to 14: SNA Bits 00 to 07: SA1 Responses Bit 15: ON Bits 08 to 14: DNA Bits 00 to 07: DA1		Check the command format and set the correct command data.	---
0601	CPU Bus Unit error	Arbitrary		Restart the CPU Unit. If the problem persists, replace the Ethernet Unit.	Saved
0602	CPU Bus Unit memory error	01: Read error 02: Write error	06: Error log	Restart the CPU Unit. If the problem persists, replace the Ethernet Unit.	Saved (except for error log)

Note

1. The time information in the CPU Unit is used in the CPU Bus Units.
2. If the time information cannot be read from the CPU Unit, the time stamp in the error log will be all zeros. This can occur due to CPU Unit startup error, unit number errors, CPU error, and model number errors. If the time is read out from a Programming Device, the time will be shown as all zeros in the year 2000.
3. The battery must be installed in the CS/CJ-series CPU Unit, the power turned ON, and then the time set before the clock in the CPU Unit can be used. The time will not be set correctly in the error log unless the clock time is set correctly.
4. An error record is not created in EEPROM when a CPU Bus Unit memory error occurs.

10-5 Troubleshooting Procedures

The following procedures can be used to troubleshoot various problems in system operation.

10-5-1 Startup Problems

Most of the initial steps in these procedures are in question form. Continue in sequence until a “True” answer tells you to jump to a specified step or until you are told to perform a specific action that corrects the problem. If performing the action does not correct the problem, return to the beginning of the procedure and start over.

1,2,3...

1. RUN indicator lit?

   True ➨ Step 14.
2. ERH indicator lit?

   True ➨ Step 12.
3. ERC indicator lit?

   True ➨ Step 9.
4. Power not supplied to CPU Unit?

   True ➨ Make sure that sufficient power is supplied to the CPU Unit.
5. Ethernet Unit loose on Rack?

True ➨ Make sure that Unit is firmly mounted and tighten the mounting screws firmly or lock the sliders into place.

6. Do the RUN and ERH indicators not light if another CPU Unit is mounted to the Rack?

   True ➨ Replace the Ethernet Unit.

7. Replace the CPU Unit that didn't work.
8. ERC indicator not lit?

   True ➨ Step 14.

9. Is the same node number used by another Unit?

   True ➨ Set the node numbers so that each one is used only once.

10. Create the I/O tables in the CPU Unit.
11. Replace the following components one at a time in the order given and discard any faulty ones: transceiver cable, transceiver, Ethernet Unit.
12. Is the node number set between 01 and 7E Hex?

    True ➨ Replace the following items in order to eliminate the faulty part: Ethernet Unit, transceiver, transceiver cable.

13. Set the unit number to between 01 and 7E Hex.
14. ERH indicator not lit?

    True ➨ Step 18.

15. Is the same unit number used by another CPU Bus Unit?

    True ➨ Set the unit numbers correctly.

16. Has a CPU Unit error occurred in the PC's CPU Unit?

    True ➨ Restart the CPU Unit. If the error persists, replace the CPU Unit.

17. Set the Setup and routing tables correctly.
18. ERH indicator not flashing?

    True ➨ Go to *10-5-6 Network Connection Problems* on page 203.

19. Is the IP address incorrect?

    True ➨ Correct the IP address in the System Setup, and read out the controller status using the READ CONTROLLER STATUS command in FINS communications and correct any problems indicated.

20. Make sure that the node number and the last byte of the IP address are the same and set other host IDs to 0, or change the address conversion method to use and IP address table or "both methods."

10-5-2 FINS Communications Problems (SEND(090)/RECV(098)/CMND(490))

Most of the initial steps in these procedures are in question form. Continue in sequence until a "True" answer tells you to jump to a specified step or until you are told to perform a specific action that corrects the problem. If performing the action does not correct the problem, return to the beginning of the procedure and start over.

1,2,3...

1. Refer to *10-6 Troubleshooting with Response Codes* on page 207 and remove any causes of the problem discovered there before proceeding with this procedure.
2. Is the control data for the instruction set incorrectly?

   True ➨ Make sure that the FINS network address is not set to 0 for the Ethernet Unit and check the network address, node number and unit address.

3. Is a CMND(194) instruction being addressed to the local node, e.g. for socket services?

   True ➨ Go to *10-5-6 Network Connection Problems* on page 203.

4. Are different UDP port numbers set for FINS communications for both the local node and the remote node?

   True ➨ Set the same port number for both nodes.

5. Are the local and remote nodes both on the same network, i.e. do they have the same network number in their IP addresses?

   True ➨ Step 10.

6. Is the IP address of the remote node missing from the IP address table?

   True ➨ Set the IP address of the remote node in the local IP address table. (Note: Use of the IP address table must be set in the mode settings for the IP address table to be effective.)

7. Is the IP address of the remote node missing from the IP router table?

   True ➨ Set the network number of the remote node in the IP router table. (With CJ-series Ethernet Units, it is possible to set a default IP router.)

8. Are the FINS network addresses of the local and remote nodes different?

   True ➨ Set both nodes to the same FINS network address.

9. Are you attempting a broadcast transmission?

   True ➨ Do not attempt to broadcast to a node with a different network number. You can broadcast only to nodes on the same IP network.

10. Set the IP address of the remote node in the IP address table or use automatic address conversion.

11. Are you attempting to communicate with a PC on another network?

    True ➨ Go to *10-5-6 Network Connection Problems* on page 203.

12. Are the routing tables set improperly?

    True ➨ Set routing tables at the local node, target node, and any relay nodes.

10-5-3 UDP Socket Problems

Most of the initial steps in these procedures are in question form. Continue in sequence until a “True” answer tells you to jump to a specified step or until you are told to perform a specific action that corrects the problem. If performing the action does not correct the problem, return to the beginning of the procedure and start over.

General Problems

1,2,3...

1. Go through the procedure in *10-5-2 FINS Communications Problems (SEND(090)/RECV(098)/CMND(490))* before starting this procedure.

2. Is the response code a value other than 0000?

   True ➨ Go to *10-6 Troubleshooting with Response Codes* on page 207.

3. Is the response code in the results storage area a value other than 0000?

   True ➨ Go to *10-7 Results Storage Area Response Codes* on page 210. (There will be no response code in the results storage area if Socket Service Request Switches are being used.)

4. Go to *10-5-6 Network Connection Problems* on page 203.

Opening and Closing Problems

Refer to *General Problems* on page 199.

Reception Problems

1,2,3...

1. Is reception processing finishing?

   True ➨ Step 10.
2. Is the remote node not processing to send data?

   True ➨ Adjust the remote node to process send data.
3. Read controller status using the FINS command READ CONTROLLER STATUS.
4. Have any reception errors occurred?

   True ➨ There may be noise affecting the network. Increase the number of retries or take measures against noise as described in *Appendix A Network Installation* or *3-6-4 Connecting the Power Supply (CS1W-ETN01 Only)*.
5. Read memory status using the FINS command READ MEMORY STATUS.
6. Is the network memory being used more than 80%?

   True ➨ There may be too much load on the Ethernet Unit. If the memory exhaustion records show counts, UDP data may be corrupted. Check your applications.
7. Read protocol status using the FINS command READ PROTOCOL STATUS.
8. Are any of the first three items in the status being counted?

   True ➨ The UDP protocol of the remote node may not be compatible with that of the Ethernet Unit. Use another communications service.
9. Check the remote node for transmission problems using the next procedure. If nothing is uncovered, go to *10-5-6 Network Connection Problems* on page 203.
10. Return to the procedure for general problems.

Transmission Problems

1,2,3...

1. Is send processing not finishing?

   True ➨ Return to the procedure for general problems.
2. Read protocol status using the FINS command READ PROTOCOL STATUS.
3. Have any failures to reach the destination been counted in the ICMP status?

   True ➨ The UDP socket specified by the destination UDP port number in the send parameters is not opening at the remote node.
4. Read controller status using the FINS command READ CONTROLLER STATUS.
5. Have any send errors occurred?

   True ➨ There may be too much traffic on the network and UDP packets may be getting corrupted. Use TCP sockets or adjust the network to reduce excessive traffic.
6. Check the reception status on the remote node.
7. Return to the procedure for general problems.

10-5-4 TCP Socket Problems

Most of the initial steps in these procedures are in question form. Continue in sequence until a “True” answer tells you to jump to a specified step or until you are told to perform a specific action that corrects the problem. If performing the action does not correct the problem, return to the beginning of the procedure and start over.

General Problems

1,2,3...

1. Go through the procedure in *10-5-2 FINS Communications Problems (SEND(090)/RECV(098)/CMND(490))* before starting this procedure.
2. Is the response code a value other than 0000?

   True ➨ Go to *10-6 Troubleshooting with Response Codes* on page 207.
3. Is the response code in the results storage area a value other than 0000?

   True ➨ Go to *10-7 Results Storage Area Response Codes* on page 210. (There will be no response code in the results storage area if Socket Service Request Switches are being used.)
4. Read controller status using the FINS command READ CONTROLLER STATUS.
5. Have any send collisions occurred?

   True ➨ There may be too much traffic going on the network. Reduce network traffic.
6. Go to *10-5-6 Network Connection Problems* on page 203.

Opening Problems

1,2,3...

1. Are you attempting an active open?

   True ➨ Step 3.
2. Is the passive open not finishing?

   True ➨ Use an active open at the remote node.
3. Is the response code in the results storage area a value other than 0049?

   True ➨ Step 6.
4. Read socket status using the FINS command READ SOCKET STATUS.
5. Does the port number being used exist at the local node?

   True ➨ Make sure that the same port number is not being used simultaneously by more than one process, including FTP services.
   Sockets can remain in ESTABLISHED or some later status even if closed; be sure to close ports from both sides of the connection.
   A socket can remain open in TIME WAIT status for up to one minute on the side that closes the socket first; we recommend that the active-side port number be set to 0 and that you close the socket from the active side. If you are using the Socket Service Request Switches, check the response code to see if it is 0049 Hex.
6. Return to *General Problems* on page 199.

Closing Problems

Refer to *General Problems* on page 199.

Reception Problems

1,2,3...

1. Is reception processing not finishing?

   True ➨ Step 6.
2. Is the remote node not processing to send data?

True ➨ Adjust the remote node to process send data.

3. Read memory status using the FINS command READ MEMORY STATUS.
4. Is the network memory being used more than 80%?

   True ➨ There may be too much load on the Ethernet Unit. If the memory exhaustion records show counts, processing may be slow. Check your applications.
5. Return to the procedure for general problems.
6. Is the response code in the results storage area a value other than 0000? (If you are using the Socket Service Request Switches, check the response code to see if it is other than 0000 Hex.)

   True ➨ Return to the procedure for general problems.
7. Is the number of bytes received in the results storage area 0?

   True ➨ The remote node's TCP socket has closed. Close the local socket.

Transmission Problems

1,2,3...

1. Is send processing finishing?

   True ➨ Return to the procedure for general problems.
2. Read socket status using the FINS command READ SOCKET STATUS.
3. Is there the maximum number of bytes in the send queue (4,096 bytes)?

   True ➨ Make sure that reception processing is being performed at the remote note.

10-5-5 FTP Service Problems

Most of the initial steps in these procedures are in question form. Continue in sequence until a "True" answer tells you to jump to a specified step or until you are told to perform a specific action that corrects the problem. If performing the action does not correct the problem, return to the beginning of the procedure and start over.

Connection Problems

1,2,3...

1. Are you unable to connect to the Ethernet Unit's FTP server?

   True ➨ Step 5.
2. If the FTP indicator lit?

   True ➨ The FTP server is connected to another client. Wait until the client has finished.
3. Are the parameter settings in the host computer incorrect?

   True ➨ Correct the computer settings. Refer to the documentation for your computer.
4. Go to *10-5-6 Network Connection Problems* on page 203.
5. Are you unable to log in?

   True ➨ Check the login name and password settings.
6. Is a Memory Card being used?

   True ➨ Step 11.
7. Can you display the EM directory using `ls` from the host computer?

   True ➨ End.
8. Have specified banks of the EM Area been converted to EM File Memory?

   True ➨ Step 9.
9. Has the EM File Memory been initialized?

True ➨ Replace the CPU Unit.

10. Initialize the EM File Memory from the CX-Programmer or other Programming Device.
11. Can you display the MEMCARD directory using `ls` from the host computer?

    True ➨ End.
12. Is a Memory Card not inserted in the PC?

    True ➨ Insert a Memory Card.
13. Is the Memory Card faulty?

    True ➨ Initialize the Memory Card. If the problem persists, replace the Memory Card if necessary.

File Transfer Problems

1,2,3...

1. Are you not connected to the FTP server?

   True ➨ Return to the previous procedure.
2. Is the current directory not MEMCARD or EM?

   True ➨ Make MEMCARD or EM the current directory (execute `cd /MEMCARD` or `cd /EM`).
3. Can you execute `get`?

   True ➨ Step 6.
4. Is the file you are attempting to get not actually on the Memory Card?

   True ➨ Designate a file actually in the file system.
5. Return to *10-5-1 Startup Problems* on page 197.
6. Can you execute `put`?

   True ➨ Step 9.
7. Is there insufficient free space available in the file system?

   True ➨ Delete unneeded files or use a different Memory Card.
8. Return to *10-5-1 Startup Problems* on page 197.
9. Is the data in the file transferred with `put` or `get` normal (i.e., not corrupted)?

   True ➨ End
10. Use the `type` command and change the file data type to binary before executing `put` or `get`.

10-5-6 Network Connection Problems

Most of the initial steps in these procedures are in question form. Continue in sequence until a “True” answer tells you to jump to a specified step or until you are told to perform a specific action that corrects the problem. If performing the action does not correct the problem, return to the beginning of the procedure and start over.

1,2,3...

1. Go through the procedure in *10-5-1 Startup Problems* before starting this procedure.
2. Go to step 6. for the CS1W-ETN11 or CJ1W-ETN11.
3. Is the P/S indicator lit?

   True ➨ Step 6.
4. Is a 24-VDC power supply connected?

True ➨ Replace the following items in order to remove the faulty part: Power supply cable, Power Supply Unit, Ethernet Unit.

5. Connect a 24-VDC power supply.
6. Is the power supply indicator lit on the transceiver?

   True ➨ Step 9.
7. Is the transceiver cable loose?

   True ➨ Connect the cable firmly.
8. Replace the following components one at a time in the order given and discard any faulty ones: transceiver cable, transceiver, Ethernet Unit.
9. Execute `ping` at each node for all nodes on the network to see if communications are possible.
10. Was not even one response received at every node in the network?

    True ➨ Check terminators, the coaxial cable, and transceiver cables.
11. Were responses not received only between certain nodes?

    True ➨ Make sure the distance between transceivers on the coaxial cable is a multiple of 2.5 m.
    Check IP address settings.
    Make sure that the remote node supports ICMP.
12. Is an FTP client not mounted on the remote node?

    True ➨ Mount an FTP client.
13. Are you using FINS communications (e.g., SEND(090), RECV(098), or CMND(490))?

    True ➨ Do an internode test.
14. Read protocol status using the FINS command READ PROTOCOL STATUS and check the following parameters in the returned status data. If any of these items have actually been counted, the remote node may not support the relevant service.

    IP (all communications): Items 2 through 6
    ICMP (PING): Items 5 through 8
    TCP (FTP and TCP sockets): Items 4 through 6 under reception status
    UDP (FINS and UDP sockets): Items 1 through 3

    If item 4, 8, or 9 under the IP status is being counted, there may be too much traffic through the Ethernet Unit. Check your user applications.

10-5-7 Mail Problems

Most of the initial steps in these procedures are in question form. Continue in sequence until a “True” answer tells you to jump to a specified step or until you are told to perform a specific action that corrects the problem. If performing the action does not correct the problem, return to the beginning of the procedure and start over.

1,2,3...

1. Is the ERH indicator lit?

   True ➨ Correct mistakes in the Setup
   Correct the SMTP server address (it is set to 255.255.255.255 or 127.*.*.*).
   Correct the local mail address.
   Correct the notification destination mail address.

2. Is notification given for user mail?

   True ➨ Step 9.

3. Is the user mail send status “7”?

   True ➨ Correct mistakes in the Setup
   Correct the SMTP server address (it is set to 0.0.0.0).
   Correct the user mail send information settings (the user data, error log information, or status data is not set in the send information).

4. Is the user mail send status “0”?

   True ➨ Turn ON the Send Mail Switch from the user program. (The Send Mail Switch has not been turned ON since power was turned ON or since the Unit was restarted.)

5. Is the user mail send status “6”?

   True ➨ Check the communications path.
   Correct the SMTP server address.
   Correct the IP router table.
   Something is blocking communications or equipment on the communications path is not set correctly.

6. Is the destination mail address incorrectly set?

   True ➨ Correct the destination mail address in the Setup. (Error mail will be held at the SMTP server if the destination mail address is incorrect. Be sure the send destination mail address is set correctly.)

7. Is required information missing from the mail data?

   True ➨ Correct the mail send information settings in the Setup (the user data, error log information, or status data is not set in the send information).

8. Was it impossible to obtain the required information from the mail data?

   True ➨ Correct the following errors.
   Correct the user-generated mail address.
   Check the user application to be sure that there is not too much traffic at the Ethernet Unit.

9. Is notification given for recurring mail?

   True ➨ Step 16.

10. Is the send status for recurring mail “7”?

    True ➨ Correct mistakes in the Setup
    Correct the SMTP server address (it is set to 0.0.0.0).
    Correct the recurring mail send information settings (the user data,

error log information, or status data is not set in the send information).

11. Is the send status for recurring mail “0”?

    True ➨ If sending recurring mail is not set in the Setup, make the proper settings.
    If sending recurring mail is set in the Setup, go to Step 24.

12. Is the send status for recurring mail “6”?

    True ➨ Check the communications path.
    Correct the SMTP server address.
    Correct the IP router table.
    Something is blocking communications or equipment on the communications path is not set correctly.

13. Is the destination mail address incorrectly set?

    True ➨ Correct the destination mail address in the Setup. (Error mail will be held at the SMTP server if the destination mail address is incorrect. Be sure the send destination mail address is set correctly.)

14. Is required information missing from the mail data?

    True ➨ Correct the mail send information settings in the Setup (the user data, error log information, or status data is not set in the send information).

15. Was it impossible to obtain the required information from the mail data?

    True ➨ Correct the following errors.
    Correct the user-generated mail address.
    Check the user application to be sure that there is not too much traffic at the Ethernet Unit.

16. Is notification given for error mail?

    True ➨ End

17. Is the send status for error mail “7”?

    True ➨ Correct mistakes in the Setup
    Correct the SMTP server address (it is set to 0.0.0.0).
    Correct the error mail send information settings (the user data, error log information, or status data is not set in the send information).

18. Is the send status for error mail “0”?

    True ➨ If sending error mail is not set in the Setup, make the proper settings.
    If sending error mail is set in the Setup, no system errors have occurred and the system should be operating correctly.

19. Is the send status for error mail “6”?

    True ➨ Check the communications path.
    Correct the SMTP server address.
    Correct the IP router table.
    Something is blocking communications or equipment on the communications path is not set correctly.

20. Is the destination mail address incorrectly set?

    True ➨ Correct the destination mail address in the Setup. (Error mail will be held at the SMTP server if the destination mail address is incorrect. Be sure the send destination mail address is set correctly.)

21. Is required information missing from the mail data?

True ➨ Correct the mail send information settings in the Setup (the user data, error log information, or status data is not set in the send information).

22. Was it impossible to obtain the required information from the mail data?

    True ➨ Correct the following errors.
    Correct the user-generated mail address.
    Check the user application to be sure that there is not too much traffic at the Ethernet Unit.

23. End

24. Check the setting of the mail send timing in the Setup. The timing may not be set or may be set longer than intended.

10-6 Troubleshooting with Response Codes

You can troubleshoot the errors in FINS communications from the response codes when the SEND(090), RECV(098), or CMND(490) instructions have been used. For the storage areas of the response codes refer to information on page 90.

The table below lists response codes (main and sub-codes) returned after execution of FINS commands, the probable cause of errors, and recommended remedies. The response codes provided here are for the Ethernet Unit. Refer to the *FINS Command Reference Manual* (W227) or the operation manuals for the relevant Unit for further information on response codes.

The 6th, 7th, and 15th bits of the response codes have specific functions. The 6th bit will be ON when a non-fatal error has occurred in the PC at the remote node; the 7th bit will be ON when a fatal error has occurred in the PC at the remote node; and the 15th bit will be ON when a network relay error has occurred. Refer to information given after the following table for more information on relay errors.

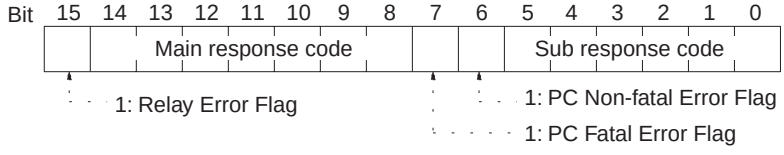

Main code	Sub-code	Probable cause	Remedy
00: Normal completion	00	---	---
01: Local node error	03	Send error in local node was caused by lack of available space in internal buffers.	Reduce the load (traffic) on the Ethernet Unit. Check your user applications.
	05	The network cannot be accessed because the IP address setting is not correct.	Correct the local IP address.
	07	The internal buffers are full because there is too much traffic at the local node, preventing data from being sent.	Correct the user application to reduce traffic at the Ethernet Unit.

Main code	Sub-code	Probable cause	Remedy
02: Remote node error	01	IP address of remote node not set correctly in IP address table or IP router table.	Set IP address of remote node into IP address table and, if internetwork transmission is required, into the IP router table.
	02	No node with the specified unit address.	Check the remote node's unit address and make sure the correct one is being used in the control data.
	05	Message packet was corrupted by transmission error.	Check the protocol and controller status by reading them with FINS commands. Increase the number of transmit retry attempts.
		Response time-out, response watchdog timer interval too short.	Increase the value for the response monitor time in the control data.
		The transmission frame may be corrupted or the internal reception buffer full.	Read out the error log and correct as required.
03: Communications controller error	01	Error occurred in the communications controller, ERC indicator is lit.	Take corrective action, referring to troubleshooting procedures in this section.
	02	CPU Unit error occurred in the PC at the remote node.	Check CPU Unit indicators at the remote node and clear the error in the CPU Unit (refer to the PC's operation manuals)
	04	Unit number setting error	Make sure the unit number is within the specified range and that the same unit number is not used twice in the same network.
04: Not executable (Service not supported.)	01	An undefined command has been used.	Check the command code and be sure the command is supported by the Unit to which you are sending it.
		A short frame (4 bytes) is being used for the FINS header frame.	Check the FINS header frame length. The Ethernet Unit does not support short headers.
05: Routing error	01	Remote node is not set in the routing tables.	Set the destination address in the routing tables.
	02	Routing tables aren't registered completely.	Set routing tables at the local node, remote node, and any relay nodes.
	03	Routing table error	Set the routing tables correctly.
	04	The maximum number of relay nodes (2) was exceeded in the command.	Redesign the network or reconsider the routing table to reduce the number of relay nodes in the command. Communications are possible on three network levels, including the local network.
10: Command format error	01	The command is longer than the max. permissible length.	Check the command format of the command and set it correctly. Be sure broadcast transmissions don't exceed 1,473 bytes.
	02	The command is shorter than min. permissible length.	Check the command format of the command and set it correctly.
	03	The designated number of data items differs from the actual number in the command data.	Check the number of items and the data, and make sure that they agree.
	05	Data for another node on the same network was received from the network.	Check the header parameters in the command data and be sure the correct command format is being used.
		An attempt was made to send response data for a broadcast address.	

Main code	Sub-code	Probable cause	Remedy
11: Parameter error	00	The parameters in the command data are incorrect. The UDP/TCP socket number was not within the proper range. The local UDP port number might be set to 0.	Check the parameters. Be sure the socket number is between 1 and 8. Set the Local UDP port number correctly.
	01	A correct memory area code has not been used or EM Area is not available.	Check the command's memory area code in the Results Storage Area and set the appropriate code.
	03	The first word is in an inaccessible area or the bit number is not 00.	Set a first word that is in an accessible area. The bit number must be 00 for Ethernet Units.
	04	The address set in the command is not correct.	Correct the address in the command data, being sure that the start address plus the number of words does not exceed accessible memory.
	0B	The response frame is too long.	Correct the number of data elements or other parameters in the command data for which the response is being returned.
	0C	Parameters are set incorrectly in the command data.	Check the command data and correct any parameters that are incorrect.
22: Status error (operating mode disagreement)	0F	The same socket service is already in progress at the specified socket number.	Use the socket status flag in PC memory to be sure that socket service has finished before starting services again.
	10	The specified socket is not open.	Open the socket. For TCP sockets, be sure to wait until connection is made.
	11	The internal buffers are full because there is too much traffic at the local node, preventing data from being sent.	Correct the user application to reduce traffic at the Ethernet Unit.
23: Environment error (no such Unit)	05	IP address conversion failed.	Check the IP address and subnet mask in the System Setup and be sure that settings are correct.
	07	IP address conversion is set for automatic conversion only.	Check the mode settings in the System Setup. This error will be generated for the READ IP ADDRESS TABLE command only.

Network Relay Errors

For network relay errors using SEND(090) or RECV(098), check the path of the command using the routing tables and the nature of the error using the response code to eliminate the cause of the error.

For network relay errors using CMND(490), the location of the relay error is recorded in the second through third words of the response, as shown below.

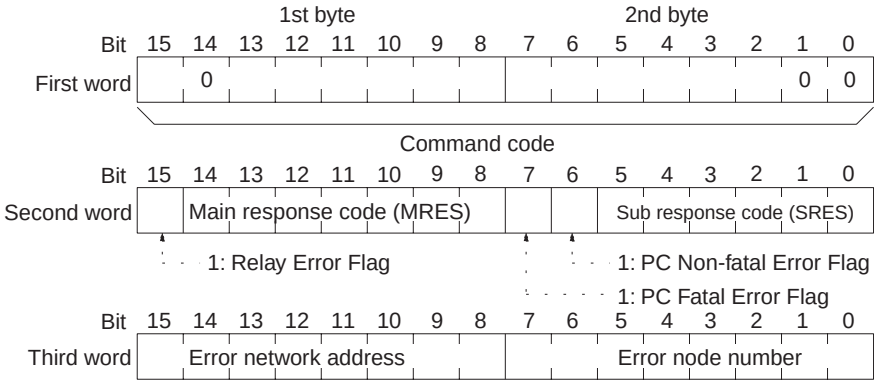

10-7 Results Storage Area Response Codes

The response codes stored in the Results Storage Area can be used to troubleshoot socket service problems. Refer to *6-2 Using Socket Services with Socket Service Request Switches* or *6-3 Using Socket Services with CMND(490)* for the location of the response codes stored in the Results Storage Area.

The UNIX socket service error messages corresponding to the response codes are given in the following table. Refer to the documentation for the devices involved when communicating between an Ethernet Unit and other devices.

Response code	UNIX error message	Description	Probable remedy
0003	ESRCH	No such process	Close the local socket and try reopening it.
0006	ENXIO	No such device or address	
0009	EBADF	Bad file number (incorrect socket specification)	
000D	EACCES	Permission denied (Broadcast address specified for remote IP address for active TCP open)	Check the IP address of the remote node and try to reconnect.
000E	EFAULT	Bad address (copy failed between kernel and user area)	Close the local socket and try reopening it.
0011	EEXIST	File exists	
0016	EINVAL	Invalid argument (socket library argument error)	
0018	EMFILE	Too many open files (More than 32 sockets)	
0020	EPIPE	Broken pipe (remote node closed socket)	Close the local socket.
003C	EPROTONO-SUPPORT	Protocol not supported (protocol other than UDP, TCP, or RAW specified)	Close the local socket and try reopening it.
003D	EPROTOTYPE	Protocol wrong type for socket	
003E	ENOBUFS	No buffer space available	There is too much load (traffic) on the Ethernet Unit. Check your user applications.
003F	EISCONN	Socket is already connected (connection attempted to open socket)	Close the local socket and try reopening it.
0040	ENOTCONN	Socket is not connected (send attempted to closed socket)	
0041	EALREADY	Operation already in progress (connection attempted to existing non-block connection)	
0042	EMSGSIZE	Message too long	Check the length of send data. UDP or TCP: 1 to 1,982 bytes UDP broadcasts: 1 to 1,472 bytes

Response code	UNIX error message	Description	Probable remedy
0043	EDESTADDRREQ	Destination address required (destination address not specified)	Close the local socket and try reopening it.
0044	ENOPROTOOPT	Protocol not available (unsupported option specified)	
0045	ECONNABORTED	Software caused connection abort (another task closed socket)	
0046	EINPROGRESS	Operation now in progress (non-block connection ended during processing)	
0047	ENOTSOCK	Socket operation on non-socket	
0048	EOPNOTSUPP	Operation not supported on socket	
0049	EADDRINUSE	Address already in use (UDP or TCP open request sent for port already in use)	Check the port number. TCP ports can remain unusable for 1 min after closing.
004A	ECONNREFUSED	Connection refused (TCP socket (active open) processing refused by remote node)	Passively open a remote TCP socket, checking the remote IP address and remote TCP port number.
004B	ECONNRESET	Connection reset by peer (TCP socket closed by remote node)	Close the local socket and try reconnecting.
004C	EADDRNOTAVAIL	Can’t assign requested address (mistake in remote IP address)	Check the setting of the remote IP address and try reconnecting.
004D	EAFNOSUPPORT	Address family not supported by protocol family	Close the local socket and try reopening it.
004E	ENETUNREACH	Network is unreachable	Set the path to the remote node in the IP router table.
004F	EHOSTDOWN	Host is down	Check the remote host and communications path.
0050	EWOULDBLOCK	Operation would block	Close the local socket and try reopening it.
0051	EHOSTUNREACH	No route to host	The specified node does not exist on the designated IP network segment. Check the communications path.
0053	ETIMEDOUT	Connection timed out (TCP timed out)	Check the remote host and communications path.
0063	ESELABORT	Used for internal Ethernet Unit processing	Close the local socket and try reopening it.
0066	(None)	Internal memory cannot be allocated for processing; the service cannot be provided.	Traffic is too high at the Ethernet Unit. Correct the user application to reduce traffic at the Ethernet Unit.
0080	(None)	Timed out for passive TCP open request	Either the remote node is not executing an active TCP open or there is a block on the network.
0081	(None)	Closed by close command during socket servicing	No action is necessarily called for.
0082	(None)	Connection with remote node not achieved for passive TCP open request	The remote IP address and TCP port number settings differ from those of the remote socket (active side).

SECTION 11
FINS Commands Addressed to Ethernet Units

This section describes the FINS commands that can be sent to an Ethernet Unit and the responses that are returned by the Ethernet Unit.

11-1 Command Codes and Response Codes 214
11-1-1 Command Code List 214
11-1-2 Response Code List 214
11-2 Socket Applications 215
11-2-1 Format 215
11-2-2 PC Memory Areas 216
11-3 Command/Response Reference 217
11-3-1 RESET 217
11-3-2 CONTROLLER DATA READ 218
11-3-3 CONTROLLER STATUS READ 219
11-3-4 INTERNODE ECHO TEST 220
11-3-5 BROADCAST TEST RESULTS READ 221
11-3-6 BROADCAST DATA SEND 221
11-3-7 ERROR LOG READ 221
11-3-8 ERROR LOG CLEAR 223
11-3-9 UDP OPEN REQUEST 223
11-3-10 UDP RECEIVE REQUEST 224
11-3-11 UDP SEND REQUEST 225
11-3-12 UDP CLOSE REQUEST 227
11-3-13 PASSIVE TCP OPEN REQUEST 228
11-3-14 ACTIVE TCP OPEN REQUEST 231
11-3-15 TCP RECEIVE REQUEST 232
11-3-16 TCP SEND REQUEST 234
11-3-17 TCP CLOSE REQUEST 235
11-3-18 PING 236
11-3-19 IP ADDRESS TABLE WRITE 237
11-3-20 IP ADDRESS WRITE 238
11-3-21 IP ADDRESS TABLE READ 239
11-3-22 IP ROUTER TABLE READ 240
11-3-23 PROTOCOL STATUS READ 241
11-3-24 MEMORY STATUS READ 245
11-3-25 SOCKET STATUS READ 247
11-3-26 ADDRESS INFORMATION READ 248
11-3-27 IP ADDRESS READ 249

11-1 Command Codes and Response Codes

11-1-1 Command Code List

The command codes listed in the following table can be sent to an Ethernet Unit.

Command code		Name	Page
MRC	SRC		
04	03	RESET	217
05	01	CONTROLLER DATA READ	218
06	01	CONTROLLER STATUS READ	219
08	01	INTERNODE ECHO TEST	220
	02	BROADCAST TEST RESULTS READ	221
	03	BROADCAST DATA SEND	221
21	02	ERROR LOG READ	221
	03	ERROR LOG CLEAR	223
27	01	UDP OPEN REQUEST	223
	02	UDP RECEIVE REQUEST	224
	03	UDP SEND REQUEST	225
	04	UDP CLOSE REQUEST	227
	10	PASSIVE TCP OPEN REQUEST	228
	11	ACTIVE TCP OPEN REQUEST	231
	12	TCP RECEIVE REQUEST	232
	13	TCP SEND REQUEST	234
	14	TCP CLOSE REQUEST	235
	20	PING	236
	50	IP ADDRESS TABLE WRITE	237
	57	IP ADDRESS WRITE (CJ Series only)	238
	60	IP ADDRESS TABLE READ	239
	61	IP ROUTER TABLE READ	240
	62	PROTOCOL STATUS READ	241
	63	MEMORY STATUS READ	245
	64	SOCKET STATUS READ	247
	65	ADDRESS INFORMATION READ	248
	67	IP ADDRESS READ (CJ Series only)	249

11-1-2 Response Code List

Response codes are 2-byte codes which indicate the results of command execution. They are returned in the response following the command code.

The first byte of a response code is the MRES (main response code), which categorizes the results of command execution. The second byte is the SRES (sub-response code) which specifies the results.

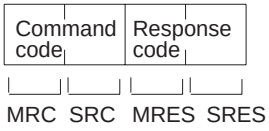

MRC: Main request code
SRC: Sub-request code
MRES: Main response code
SRES: Sub-response code

The MRES codes are shown in the following table along with the results they indicate. Refer to *10-6 Troubleshooting with Response Codes* for details on response codes including the SRES.

MRES	Execution results
00	Normal completion
01	Local node error
02	Remote node error
03	Unit error (controller error)
04	Service not supported
05	Routing error
10	Command format error
11	Parameter error
22	Status error
23	Operating environment error
25	Unit error

11-2 Socket Applications

The format of the following FINS commands partially differs when the sockets are used.

Command code		Name	Page
MRC	SRC		
27	01	UDP OPEN REQUEST	223
	02	UDP RECEIVE REQUEST	224
	03	UDP SEND REQUEST	225
	04	UDP CLOSE REQUEST	227
	10	PASSIVE TCP OPEN REQUEST	228
	11	ACTIVE TCP OPEN REQUEST	231
	12	TCP RECEIVE REQUEST	232
	13	TCP SEND REQUEST	234
	14	TCP CLOSE REQUEST	235

11-2-1 Format

The basic format of these commands is shown in the diagram below.

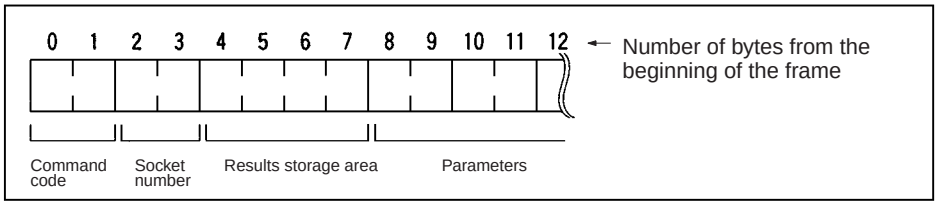

Command Code Specifies the requested process.

Socket Number Specifies the socket number for which the process is requested, from 1 to 8.

Results Storage Area Specifies the area to store the results of the requested process.

Parameters Specifies the parameters for the command code. Parameters depend on the command being executed; for details, refer to the following pages.

11-2-2 PC Memory Areas

The memory areas of the PC that can be specified for results storage when executing commands from the PC are listed in the table below. The *Variable type* is set in the first byte of the results storage area. The remaining three bytes contain the address for communications.

Addresses in the *Addresses for communications* column are not the same as the actual memory addresses.

Memory area	Data type		Word addresses	Addresses for communications	Variable type	Bytes
Bit Areas	Current value of word	CIO	CIO 0000 to CIO 6143	000000 to 17FF00	B0 (80)*	2
		HR	H000 to H511	000000 to 01FF00	B2	
		A	A448 to A959	01C000 to 03BF00	B3	
DM Area		DM	D00000 to D32767	000000 to 7FFF00	82	2
EM Area		Bank 0	E0_E00000 to E0_E32765	000000 to 7FFF00	A0 (90)*	2
		Bank 1	E1_E00000 to E1_E32765	000000 to 7FFF00	A1 (91)*	
		Bank 2	E2_E00000 to E2_E32765	000000 to 7FFF00	A2 (92)*	
		Bank 3	E3_E00000 to E3_E32765	000000 to 7FFF00	A3 (93)*	
		Bank 4	E4_E00000 to E4_E32765	000000 to 7FFF00	A4 (94)*	
		Bank 5	E5_E00000 to E5_E32765	000000 to 7FFF00	A5 (95)*	
		Bank 6	E6_E00000 to E6_E32765	000000 to 7FFF00	A6 (96)*	
		Bank 7	E7_E00000 to E7_E32765	000000 to 7FFF00	A7 (97)*	
		Bank 8	E8_E00000 to E8_E32765	000000 to 7FFF00	A8	2
		Bank 9	E9_E00000 to E9_E32765	000000 to 7FFF00	A9	2
		Bank A	EA_E00000 to EA_E32765	000000 to 7FFF00	AA	2
		Bank B	EB_E00000 to EB_E32765	000000 to 7FFF00	AB	2
		Bank C	EC_E00000 to EC_E32765	000000 to 7FFF00	AC	2
		Current bank	E00000 to E32765	000000 to 7FFF00	98	2

Note The variable types (area designations) given in parentheses can also be used, allowing CV-series or CVM1 programs to be more easily corrected for use with CS/CJ-series PCs.

Word and Bit Addresses

Three bytes of data are used to express data memory addresses of PCs. The most significant two bytes give the word address and the least significant byte gives the bit number between 00 and 15. The word address combined with the bit number expresses the bit address. The bit number is always 00 because Ethernet Units can handle only word data, i.e., individual bits cannot be addressed.

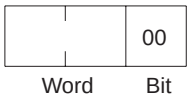

Word addresses for specific memory area words can be calculated by converting the normal decimal word address to hexadecimal and adding it to the first word in the *Addresses for communications* column in the above table. For example, the address for communications for D00200 would be 0000 (from above table) plus C8 (decimal 200 converted to hexadecimal), or 00C8.

11-3 Command/Response Reference

This section describes the FINS commands that can be sent to Ethernet Units and the responses to each command.

The command, response, and (where applicable) the results storage blocks are given with the commands in graphic form as shown in the following diagram. If the data is fixed, it is included in the blocks. If the data is variable, it is described following the blocks. Each box represents 1 byte; every two boxes represents 1 word. The following diagram shows 2 bytes, or 1 word.

Two bytes

The results storage format is the format used to store transfer results and data for socket services requested with command codes 2701 to 2714.

Response codes applicable to the command are described at the end of the command description. If any UNIX error codes are generated, these are also described. Refer to your UNIX error symbol definition file /usr/include/sys/errno.h for details. UNIX errors are returned in the results storage area.

Note Except for special cases, all send/receive data is in hexadecimal format.

11-3-1 RESET

Reset the Ethernet Unit.

Command Block

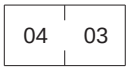

Response Block

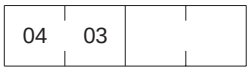

Precautions

No response will be returned if the command ends normally. A response will be returned only if an error occurs.

In some cases, send requests (SEND(192)/RECV(193) instructions) made from the PC to the Ethernet Unit just before execution of the RESET command may not be executed.

Except for the FINS communications service sockets, all open sockets (for sockets services, FTP server, or mail transmission) are closed immediately before resetting.

Response Codes

Response code	Description
1001	Command too large

11-3-2 CONTROLLER DATA READ

Reads the following data from the Ethernet model, version, IP address, subnet mask, FINS UDP port number, mode settings, Ethernet address.

Command Block

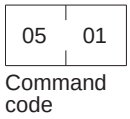

Response Block

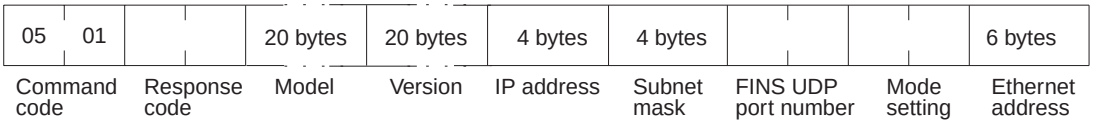

Parameters

Model, Version (Response)

The Ethernet Unit mode and version are returned as ASCII characters occupying 20 bytes each (i.e., 20 characters each). If all bytes are not used, the remaining bytes will be all spaces (ASCII 20 Hex).

Example Model: CS1W-ETN01, CS1W-ETN11, CJ1W-ETN11
Version: V1.00

IP Address, Subnet Mask (Response)

The Ethernet Unit's IP address and subnet mask are returned as 4 bytes each.

FINS UDP Port Number (Response)

The Ethernet Unit's UDP port number for FINS is returned as 2 bytes.

Mode Setting (Response)

The mode setting in the system setup is returned.

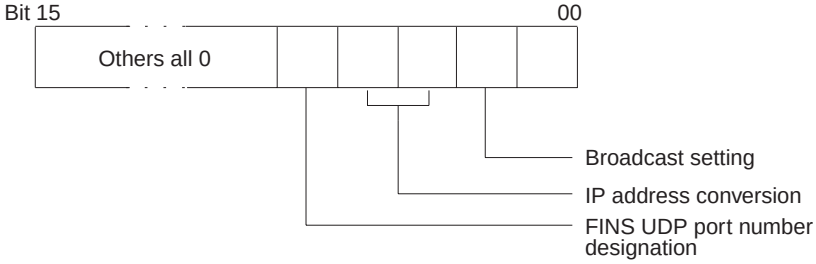

Broadcast Setting

0: All 1s for host number (4.3BSD specification)
1: All 0s for host number (4.2BSD specification)

IP Address Conversion

00, 01: Automatic generation
10: IP address table
11: Both methods (IP address table + automatic generation)

FINS UDP Port Number Designation

0: Default value (9600)
1: System setup value

Ethernet Address (Response)

The Ethernet address of the Ethernet Unit is returned. The Ethernet address is the address marked on the label on the side of the Ethernet Unit.

Response Codes

Response code	Description
0000	Normal
1001	Command too large

11-3-3 CONTROLLER STATUS READ

Reads the controller status.

Command Block

06	01
Command code	

Response Block

06	01		2 bytes	4 bytes	4 bytes	4 bytes	4 bytes	4 bytes
Command code		Response code	Error flags	Total number of packets received	Total number of receive errors	Total number of packets sent	Total number of errors sent	Total number of send collisions

Parameters

Error Flags (Response)

Indicates the operating status and errors that occurred when the Ethernet Unit was started.

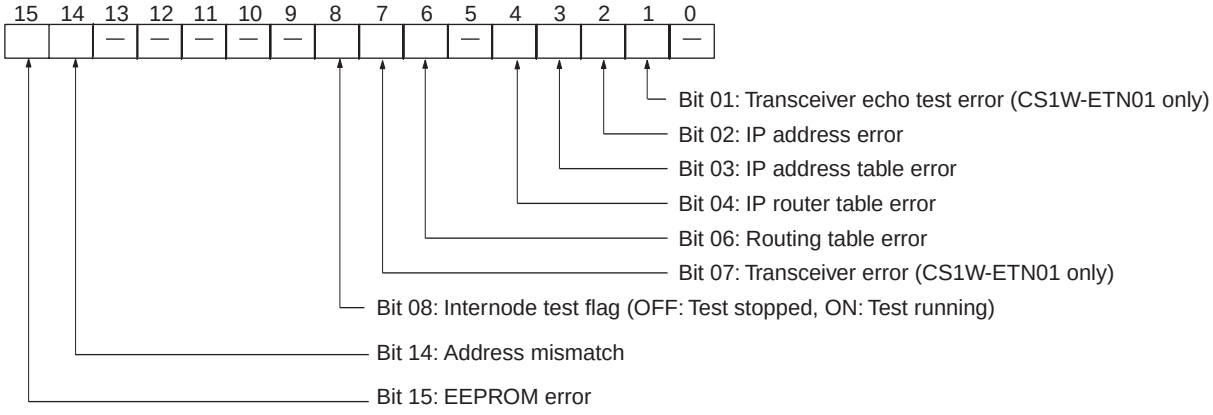

The cause of each error is listed below.

Transceiver Echo Test Error (CS1W-ETN01 only)

An error occurred during the self diagnostic testing after the Unit was turned on or reset.

Note If this bit turns ON for the CS1W-ETN11 or CJ1W-ETN11, the Ethernet Unit has malfunctioned.

IP Address Error

All bits for the network number or host number are set to 0 or 1.

IP Address Table Error

More than 32 records exist in the IP address table.

IP Router Table Error

More than 8 records exist in the IP router table.

Routing Table Error

Local network table contains 0 or more than 16 records.
Relay network table contains more than 20 records.

Transceiver Error (CS1W-ETN01 Only)

The transceiver cable is disconnected or the transceiver is defective.

Note If this bit turns ON for the CS1W-ETN11 or CJ1W-ETN11, the Ethernet Unit has malfunctioned.

Address Mismatch

The address conversion method was set for automatic generation, but the node number and the last byte of the local IP address do not agree, or other host sections are 0.

EEPROM Error

An error occurred in the EEPROM memory in the Ethernet Unit.

Total Number of Packets Received (Response)

The total number of packets received by the Ethernet Unit is returned.

Total Number of Receive Errors (Response)

The total number of errors detected while the Ethernet Unit was receiving is returned. The types of error detected are short packet errors, alignment errors, and CRC errors.

Total Number of Packets Sent (Response)

The total number of packets sent by the Ethernet Unit is returned.

Total Number of Errors Sent (Response)

The total number of packet errors detected while the Ethernet Unit was sending is returned.

Total Number of Send Collisions

The number of packets damaged by 16 collisions with data from other nodes during Ethernet Unit transmissions.

Precautions

Counting of the total number of packets received, total number of receive errors, total number of packets sent, total number of errors sent, and total number of send collisions is discontinued when the counted value reaches the maximum value.

Response Codes

Response code	Description
0000	Normal
1001	Command too large

11-3-4 INTERNODE ECHO TEST

Runs the echo test between specified nodes.

Command Block

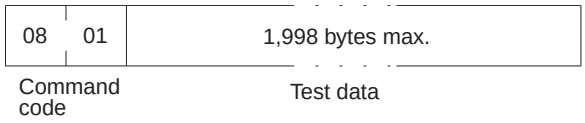

Response Block

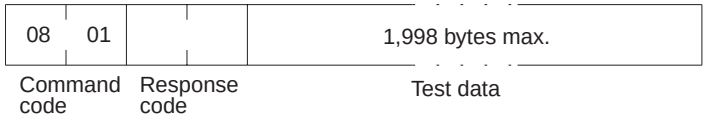

Parameters

Test Data (Command, Response)

This command specifies the data to be sent to the specified nodes. Up to 1,998 bytes can be specified. The response sends back data identical to the data specified in the command. An abnormality is assumed if the data returned in the response differs from the test data sent.

Precautions

The test destination node is the destination node specified in the CMND(194) instruction operands.

Always specify the unit address of the Ethernet Unit in the CMND(194) instruction.

Response Codes

Response code	Description
0000	Normal
1001	Command too large
1002	Command too small (No test data)

11-3-5 BROADCAST TEST RESULTS READ

Reads the results (number of times data received) of the broadcast test.

Command Block

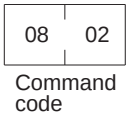

Response Block

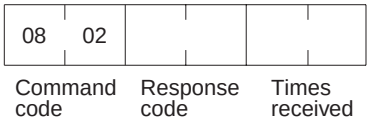

Parameters

Times Received (Response)

The number of times the data has been received normally during the broadcast send test is returned as a hexadecimal number. The number of times received is cleared each time the result is read.

Response Codes

Response code	Description
0000	Normal
1001	Command too large

11-3-6 BROADCAST DATA SEND

Sends test data simultaneously to all nodes on the network.

Command Block

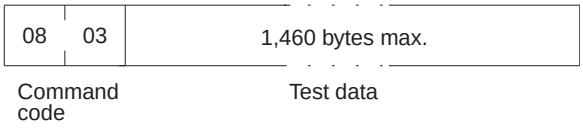

Parameters

Test Data (Command)

This command specifies the data to be sent to the specified nodes. Up to 1,460 bytes can be specified.

Precautions

No response is made to this command.

When using this command, set the FINS header parameters (or the control data for the CMND(194) instruction) as follows:

Destination node number:	FF (broadcast data)
Destination unit address:	FE (Ethernet Unit)
Response/no response flag:	1 (no response)

11-3-7 ERROR LOG READ

Reads the error log.

Command Block

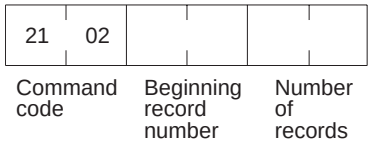

Response Block

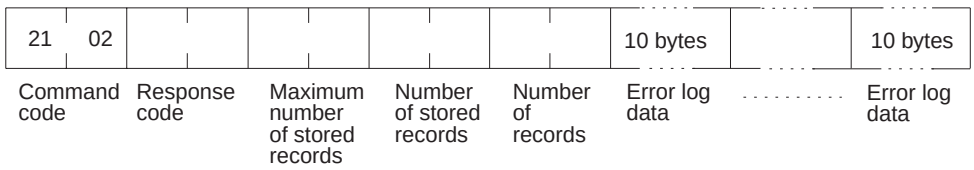

Parameters

Beginning Record Number (Command)

The first record to be read. The first record number can be specified in the range between 0000 and 003F (0 to 63 decimal) where 0000 is the oldest record.

Number of Records (Command, Response)

The number of records to read is specified between 0001 and 0040 (1 to 64 decimal) in the command. The response returns the actual number of records read.

Maximum Number of Stored Records (Response)

The maximum number of records that can be stored in the error log. Care is required as the error log differs according to the type of PC or CPU Bus Unit. In an Ethernet Unit, the maximum number of stored records is fixed at 40 (64 decimal).

Number of Stored Records (Response)

The number of records stored at the time the command is executed is returned.

Error Log Data (Response)

The specified number of error log records from the beginning record number is returned sequentially. The total number of bytes in the error log is calculated as the number of records x 10 bytes/record. Each error log record thus comprises 10 bytes, configured as follows:

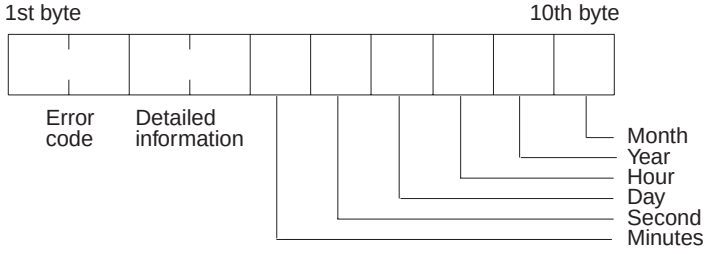

Error Code, Detailed Information

Details of the error stored in the record. Refer to *Section 10 Troubleshooting* for details.

Minute, Second, Day, Hour, Year, Month

Indicate the time at which the error stored in the record occurred.

Precautions

If the error log contains fewer records than the number specified in the number of records parameter, all records stored in the error log at the time the command is executed will be returned and the command executed will end normally.

Response Codes

Response code	Description
0000	Normal
1001	Command too large
1002	Command too small
1103	Beginning record number is out of range
110C	The number of read records is 0.

11-3-8 ERROR LOG CLEAR

Clears the number of records stored in the Ethernet Unit error log.

Command Block

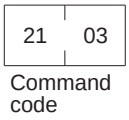

Response Block

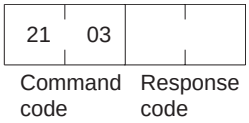

Response Codes

Response code	Description
0000	Normal
1001	Command too large

11-3-9 UDP OPEN REQUEST

Requests processing to open a socket.

Command Block

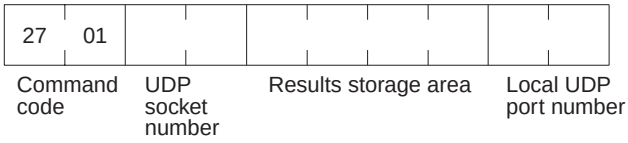

Response Block

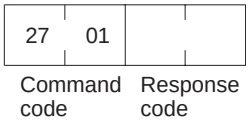

Results Storage Format

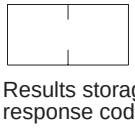

Parameters

UDP Socket Number (Command)

The UDP socket number to be opened specified as 2 bytes between 1 and 8.

Results Storage Area (Command)

The area in which the results of the command execution are stored. The first byte specifies the memory area and data type (variable type). The 2nd to 4th bytes specify the beginning address of the results storage area. Refer to page 216 for details about the variable types and addresses that can be specified.

Local UDP Port Number (Command)

The UDP port number for communications with the socket is specified as 2 bytes (0 cannot be specified). Packets received at this port are distributed to

the socket specified in the UDP socket number, and send packets are distributed from the UDP socket to this port. The port number specified as the FINS UDP port number (default value 9600) cannot be used.

Response Codes

Response code	Description
0000	Normal
0105	Local IP address setting error
0302	CPU Unit error; execution not possible.
1001	Command too large
1002	Command too small
1100	UDP socket number is out of range. Local UDP port number is 0.
1101	The variable type for the results storage area is out of range.
1103	Non-zero bit address specified for the results storage area.
220F	Specified socket is already open or is being closed.
2211	High traffic at Unit; cannot execute service.

Results Storage Area Response Codes

Response code	Description
0000	Normal
003E	Internal buffer cannot be reserved due to high receive load (ENOBUFS).
0049	Duplicate UDP port number (EADDRINUSE).

11-3-10 UDP RECEIVE REQUEST

Requests that data be sent from a UDP socket.

Command Block

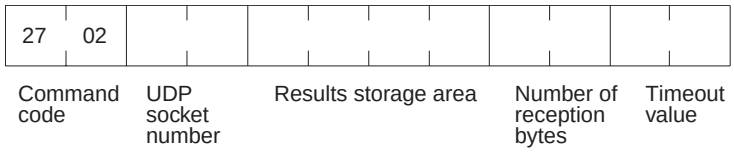

Response Block

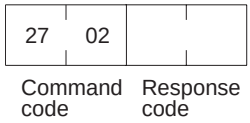

Results Storage Format

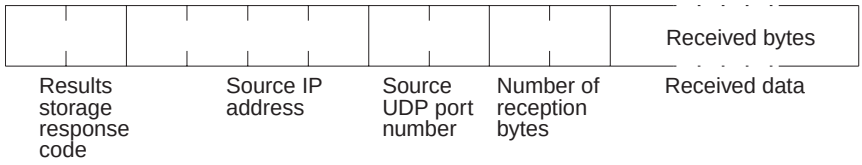

Parameters

UDP Socket Number (Command)

The UDP socket number to receive data specified as 2 bytes between 1 and 8.

Results Storage Area (Command)

The area in which the results of the command execution are stored. The first byte specifies the memory area and data type (variable type). The 2nd to 4th bytes specify the beginning address of the results storage area. Refer to page 216 for details about the variable types and addresses that can be specified.

Number of Reception Bytes (Command, Results Storage Area)

The maximum number of bytes of data to be received is given in the command. The number of bytes of data received will be stored in the results storage area. Up to 1,984 bytes can be specified.

Timeout Value (Command)

The maximum control time between receiving the receive request and storing the result. If this set time limit is exceeded, the code for a timeout error will be set as the results storage response code. The value is set in units of 0.1 s. The timeout time will be unlimited if the value is set to 0.

Source IP Address (Results Storage Area)

The IP address of the node sending data.

Source UDP Port Number (Results Storage Area)

The port number of the node sending data.

Received Data (Results Storage Area)

The data sent from the remote node.

Precautions

If a packet is received which contains more bytes than the number specified in *Number of reception bytes* specified in the command, the specified number of bytes will be stored and the remainder of the bytes will be discarded.

Response Codes

Response code	Description
0000	Normal
0105	IP address setting error
0302	CPU Unit error; execution not possible.
1001	Command too large
1002	Command too small
1100	UDP socket number or number of reception bytes is out of range.
1101	The variable type for the results storage area is out of range.
1103	Non-zero bit address specified for the results storage area.
220F	The specified socket is currently receiving data.
2210	The specified socket is not open.
2211	High traffic at Unit; cannot execute service.

Results Storage Area Response Codes

Response code	Description
0000	Normal
003E	Internal buffer cannot be reserved due to high reception load (ENOBUFS).
0066	Internal memory cannot be allocated; cannot execute service.
0080	A receive request timeout error occurred.
0081	The specified socket was closed while receiving data.

11-3-11 UDP SEND REQUEST

Requests that data be received by a UDP socket.

Command Block

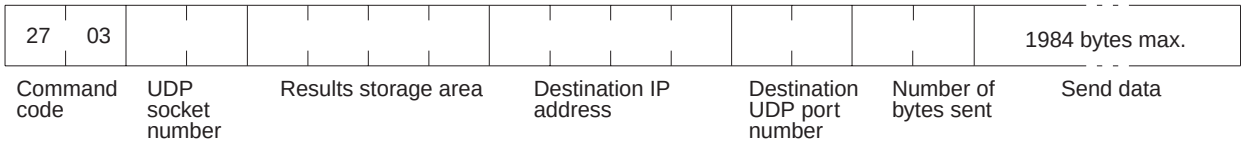

Response Block

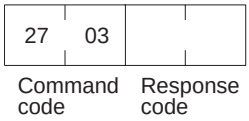

Results Storage Format

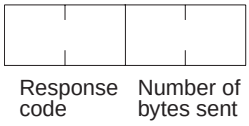

Parameters

UDP Socket Number (Command)

The UDP socket number to send the data specified as 2 bytes between 1 and 8.

Results Storage Area (Command)

The area in which the result of the command execution is stored. The first byte specifies the memory area and data type (variable type). The 2nd to 4th bytes specify the beginning address of the results storage area. Refer to page 216 for details about the variable types and addresses that can be specified.

Destination IP Address (Command)

The IP address of the node to which data is being sent.

Destination UDP Port Number (Command)

The UDP port number of the node to which data is being sent.

Number of Bytes Sent (Command, Results Storage Area)

The number of bytes in the data sent by this command. Up to 1,984 bytes can be specified, or up to 1,472 bytes can be specified if the broadcast address is specified as the send destination. The results storage area stores the actual number of bytes sent.

Send Data (Command)

Specifies the data sent to the remote node.

Response Codes

Response code	Description
0000	Normal
0105	Local IP address setting error
0302	CPU Unit error; execution not possible.
1001	Command too large
1002	Command too small
1003	The number of bytes sent does not match the sent data length.
1100	UDP socket number or number of bytes sent is out of range. The destination IP address is 0. Local UDP port number is 0.
1101	The variable type for the results storage area is out of range.
1103	Non-zero bit address specified for the results storage area.
220F	Specified socket is currently sending.
2210	The specified socket is not open.
2211	High traffic at Unit; cannot execute service.

Results Storage Area Response Codes

Response code	Description
0000	Normal
003E	Internal buffer cannot be reserved due to high reception load (ENOBUFS).
0042	The send destination IP address is a broadcast address and the number of bytes sent exceeds 1,472. (EMSGSIZE)
004C	Incorrect network number. Incorrect destination IP address (EADDRNOTAVAIL).
004E	Incorrect destination IP address (ENETUNREACH). No network number in IP router table. Router incorrectly set.
0051	Router incorrectly specified. Incorrect destination IP address (EHOSTUNREACH).

11-3-12 UDP CLOSE REQUEST

Requests processing to close a socket.

Command Block

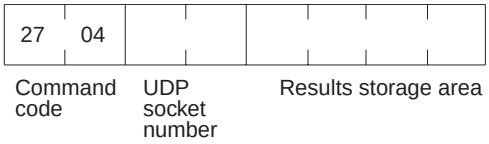

Response Block

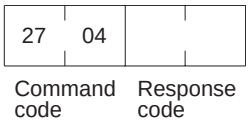

Results Storage Format

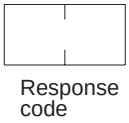

Parameters

UDP Socket Number (Command)

The UDP socket number to be closed specified as 2 bytes between 1 and 8.

Results Storage Area (Command)

The area in which the results of the command execution are stored. The first byte specifies the memory area and data type (variable type). The 2nd to 4th bytes specify the beginning address of the results storage area. Refer to page 216 for details about the variable types and addresses that can be specified.

Response Codes

Response code	Description
0000	Normal
0105	Local IP address setting error
0302	CPU Unit error; execution not possible.
1001	Command too large
1002	Command too small
1100	UDP socket number is out of range.
1101	The variable type for the results storage area is out of range.
1103	Non-zero bit address specified for the results storage area.

Response code	Description
2210	Specified socket is not open.
2211	High traffic at Unit; cannot execute service.

Results Storage Area Response Codes

Response code	Description
0000	Normal

11-3-13 PASSIVE TCP OPEN REQUEST

Requests processing to open a TCP socket. The socket will wait to be connected to another node.

Command Block

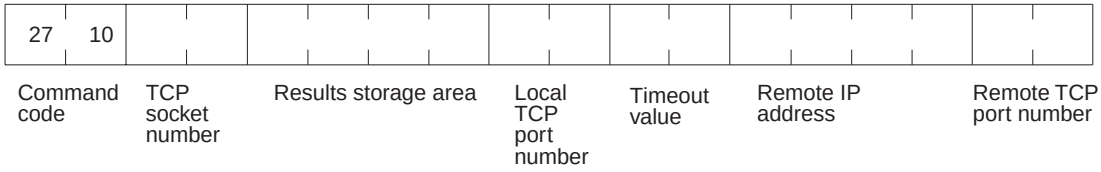

Response Block

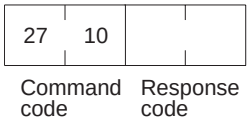

Results Storage Format

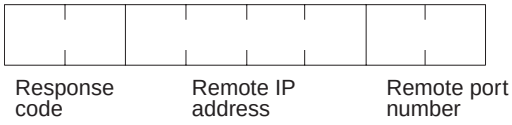

Parameters

TCP Socket Number (Command)

The TCP socket number to be opened specified as 2 bytes between 1 and 8.

Results Storage Area (Command)

The area in which the results of the command execution are stored. The first byte specifies the memory area and data type (variable type). The 2nd to 4th bytes specify the beginning address of the results storage area. Refer to page 216 for details about the variable types and addresses that can be specified.

Local TCP Port Number (Command, Results Storage Area)

The TCP port number for communications with the socket is specified as 2 bytes (0 cannot be specified). Do not specify the port number of the FTP server (port #21).

Timeout Value (Command)

The maximum control time between receiving the open request and storing the result. If this set time limit is exceeded, the code for a timeout error will be set as the results storage response code. The value is set in units of 0.1 s. The timeout time is unlimited if the value is set to 0.

Remote IP Address (Command, Results Storage Area)

Specify the remote node's IP address. If all zeroes are set, no remote node is specified and connection is awaited from any node. If any other value is set, connection is awaited from the specified remote node. The IP address of the connected remote node will be stored in the results storage area.

Remote Port Number (Command, Results Storage Area)

Specify the remote TCP port number with this command. If all zeroes are set, no remote TCP port number is specified. If any other value is set, it specifies the TCP port number of the remote node. The TCP port number of the connected remote node will be stored in the results storage area.

Precautions

Processing varies as shown in the table below according to the specified combination of remote IP address and remote TCP port number.

Remote IP address	Remote TCP port	Description
0	0	All connection requests received
0	Not 0	Received only when port number matches.
Not 0	0	Received only when IP address matches.
Not 0	Not 0	Received only when IP address and port number matches.

Response Codes

Response code	Description
0000	Normal
0105	Local IP address setting error
0302	CPU Unit error; execution not possible.
1001	Command too large
1002	Command too small
1100	TCP socket number is out of range. Local TCP port number is 0.
1101	The variable type for the results storage area is out of range.
1103	Non-zero bit address specified for the results storage area.
220F	The specified socket (connection) is already open or is currently being opened.
2211	High traffic at Unit; cannot execute service.

Results Storage Area Response Codes

Response code	Description
0000	Normal
003E	Internal buffer cannot be reserved due to high reception load (ENOBUFS).
0042 (See note.)	An error occurred (EMSGSIZE).
0045	A communication error occurred with the remote node (ECONNABORTED).
0049	Duplicated port numbers (EADDRINUSE).
004A (See note.)	An error occurred (ECONNREFUSED).
004B (See note.)	A communication error occurred with the remote node (ECONNRESET).
004E (See note.)	A parameter error occurred at the remote IP address (ENETUNREACH).
0051 (See note.)	A parameter error occurred at the remote IP address (EHOSTUNREACH).
0053	A communication error occurred with the remote node (ETIMEDOUT). No remote exists.
0066	Internal memory cannot be allocated; cannot execute service.
0080	An open request timeout error occurred.
0081	Socket was closed during opening procedure.
0082	Connection could not be established with the specified remote.

Note These errors occur only in large multilayered networks.

11-3-14 ACTIVE TCP OPEN REQUEST

Requests processing to open a TCP socket. The socket will be connected to another node.

Command Block

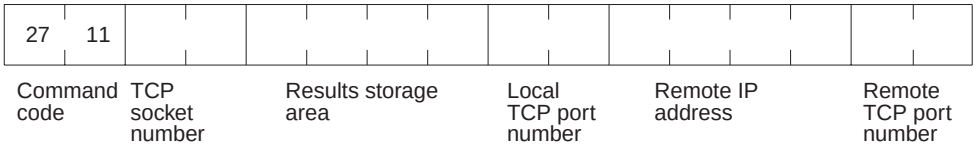

Response Block

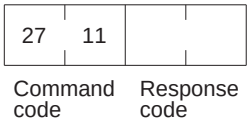

Results Storage Format

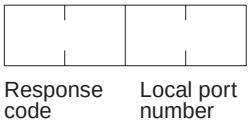

Parameters

TCP Socket Number (Command)

The TCP socket number to be opened specified as 2 bytes between 1 and 8.

Results Storage Area (Command)

The area in which the results of the command execution are stored. The first byte specifies the memory area and data type (variable type). The 2nd to 4th bytes specify the beginning address of the results storage area. Refer to page 216 for details about the variable types and addresses that can be specified.

Local TCP Port Number (Command, Results Storage Area)

The TCP port number for communications with the socket is specified as 2 bytes (0 cannot be specified). Do not specify the port number of the FTP server (port #21). An available TCP port number is automatically assigned if 0 is specified.

Remote IP Address (Command)

Specify the remote node's IP address (must be non-zero).

Remote Port Number (Command)

Specify the remote TCP port number (must be non-zero).

Response Codes

Response code	Description
0000	Normal
0105	Local IP address setting error
0302	CPU Unit error; execution not possible.
1001	Command too large
1002	Command too small
1100	TCP socket number is out of range. Remote IP address is 0. Remote TCP port number is 0.
1101	The variable type for the results storage area is out of range.
1103	Non-zero bit address specified for the results storage area.
220F	The specified socket (connection) is already open or is being opened.
2211	High traffic at Unit; cannot execute service.

Results Storage Area Response Codes

Response code	Description
0000	Normal
000D	A parameter error occurred at the remote IP address (EACCES).
003E	Internal buffer cannot be reserved due to high receive load (ENOBUFS).
0042 (See note.)	An error occurred (EMSGSIZE).
0044	Received ICMP data (ENOPROTOOPT).
0045	Local socket closed (ECONNABORTED).
0049	Duplicated port numbers (EADDRINUSE).
004A	An error occurred (ECONNREFUSED). Passive remote is not available.
004B (See note.)	A communication error occurred with the remote node (ECONNRESET).
004C	A parameter error occurred at the remote IP address (EADDRNOTAVAIL). A parameter was specified incorrectly. An attempt was made to actively open local TCP port.
004E	A parameter error occurred at the remote IP address (ENETUNREACH). No network number in IP router table or incorrect router setting.
0051	A parameter error occurred at the remote IP address (EHOSTUNREACH). Incorrect router setting.
0053	A communication error occurred with the remote node (ETIMEDOUT). No remote exists.
0081	Socket was closed during opening procedure.

Note These errors occur only in large multilayered networks.

11-3-15 TCP RECEIVE REQUEST

Requests that data be sent from a TCP socket.

Command Block

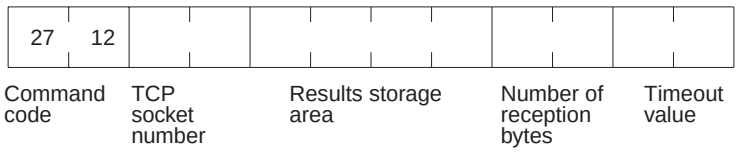

Response Block

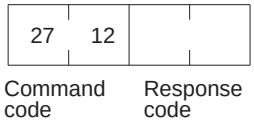

Results Storage Format

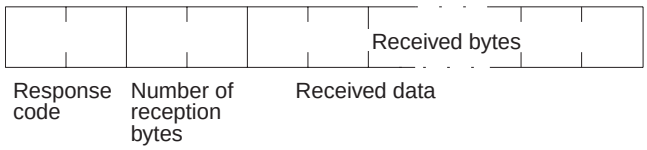

Parameters

TCP Socket Number (Command)

The TCP socket number to receive data specified as 2 bytes between 1 and 8.

Results Storage Area (Command)

The area in which the results of the command execution are stored. The first byte specifies the memory area and data type (variable type). The 2nd to 4th bytes specify the beginning address of the results storage area. Refer to

page 216 for details about the variable types and addresses that can be specified.

Number of Reception Bytes (Command, Results Storage Area)

The maximum number of bytes of data to be received is given in the command. The number of bytes of data received will be stored in the results storage area. Up to 1,984 bytes can be specified.

Timeout Value (Command)

The maximum control time between receiving the receive request and storing the result. If this set time limit is exceeded, the code for a timeout error will be set as the results storage response code. The value is set in units of 0.1 s. The timeout time is unlimited if the value is set to 0.

Received Data (Results Storage Area)

Stores the received data.

Response Codes

Response code	Description
0000	Normal
0105	Local IP address setting error
0302	CPU Unit error; execution not possible.
1001	Command too large
1002	Command too small
1100	TCP socket number or number of reception bytes is out of range.
1101	The variable type for the results storage area is out of range.
1103	Non-zero bit address specified for the results storage area.
220F	The specified socket is receiving data.
2210	No connection could be established to the specified socket.
2211	High traffic at Unit; cannot execute service.

Results Storage Area Response Codes

Response code	Description
0000	Normal
003E	Internal buffer cannot be reserved due to high receive load (ENOBUFS).
0042 (See note.)	Received ICMP data (EMSGSIZE).
0044 (See note.)	Received ICMP data (ENOPROTOOPT).
0045 (See note.)	A communication error occurred with the remote node (ECONNABORTED).
004B	A communication error occurred with the remote node (ECONNRESET).
004E (See note.)	Incorrect destination IP address (ENETUNREACH). No network number in IP router table. Router incorrectly set.
004F (See note.)	Received ICMP data (EHOSTDOWN).
0051 (See note.)	Received ICMP data (EHOSTUNREACH). Router incorrectly set.
0053	A communications error occurred with the remote node (ETIMEDOUT).
0066	Internal memory cannot be allocated; cannot execute service.
0080	A receive request timeout error occurred.
0081	Socket was closed while receiving.

Note These errors occur only in large multilayered networks.

11-3-16 TCP SEND REQUEST

Requests that data be received at a TCP socket.

Command Block

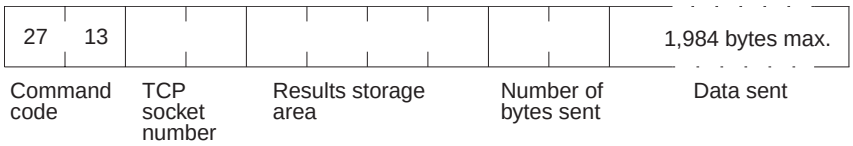

Response Block

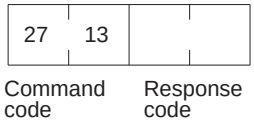

Results Storage Format

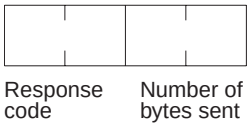

Parameters

TCP Socket Number (Command)

The TCP socket number to send the data specified as 1 byte between 1 and 8.

Results Storage Area (Command)

The area in which the results of the command execution are stored. The first byte specifies the memory area and data type (variable type). The 2nd to 4th bytes specify the beginning address of the results storage area. Refer to page 216 for details about the variable types and addresses that can be specified.

Number of Bytes Sent (Command, Results Storage Area)

The number of bytes in the data sent specified between 1 and 1,984. The results storage area stores the actual number of bytes sent.

Data Sent (Command)

Specifies the data to be sent.

Response Codes

Response code	Description
0000	Normal
0105	Local IP address setting error
0302	CPU Unit error; execution not possible.
1001	Command too large
1002	Command too small
1003	The number of bytes sent does not match the amount of data.
1100	The TCP socket number or number of bytes sent is out of range.
1101	The variable type for the results storage area is out of range.
1103	Non-zero bit address specified for the results storage area.
220F	The specified socket is sending data.
2210	No connection could be established to the specified socket.
2211	High traffic at Unit; cannot execute service.

Results Storage Area Response Codes

Response code	Description
0000	Normal
0020	Connection to the remote socket was broken during transmission (EPIPE).

Response code	Description
003E	Internal buffer cannot be reserved due to high receive load (ENOBUFS).
0042 (See note.)	An error occurred (EMSGSIZE).
0044 (See note.)	Received ICMP data (ENOPROTOOPT).
0045 (See note.)	A communication error occurred with the remote node (ECONNABORTED).
004B (See note.)	A communication error occurred with the remote node (ECONNRESET).
004E (See note.)	A parameter error occurred at the remote IP address (ENETUNREACH).
004F (See note.)	Received ICMP data (EHOSTDOWN).
0051 (See note.)	A parameter error occurred at the remote IP address (EHOSTUNREACH).
0053 (See note.)	A communication error occurred with the remote node (ETIMEDOUT).
0081	The specified socket was closed during transmission.

Note These errors occur only in large multilayered networks.

11-3-17 TCP CLOSE REQUEST

Requests processing to close a TCP socket. Other processing being carried out is forcibly ended and a code is recorded in the results storage area.

Command Block

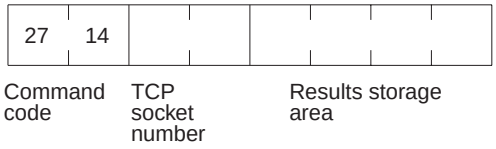

Response Block

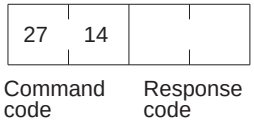

Results Storage Format

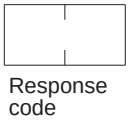

Parameters

TCP Socket Number (Command)

The TCP socket number to be closed specified as 2 bytes between 1 and 8.

Results Storage Area (Command)

The area in which the results of the command execution are stored. The first byte specifies the memory area and data type (variable type). The 2nd to 4th bytes specify the beginning address of the results storage area. Refer to page 216 for details about the variable types and addresses that can be specified.

Precautions

Any other processing, such as sending or receiving data, being carried out when this close command is executed will be forcibly ended and a code will be stored in the results storage area to indicate that this processing was forcibly ended.

Response Codes

Response code	Description
0000	Normal
0105	Local IP address setting error
0302	CPU Unit error; execution not possible.
1001	Command too large
1002	Command too small
1100	The TCP socket number is out of range.
1101	The variable type for the results storage area is out of range.
1103	Non-zero bit address specified for the results storage area.
2210	No connection could be established to the specified socket.
2211	High traffic at Unit; cannot execute service.

Results Storage Area Response Codes

Response code	Description
0000	Normal

11-3-18 PING

Equivalent processing to the UNIX computer `ping` command (see below).

Command Block

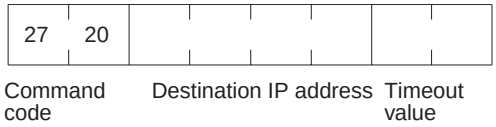

Response Block

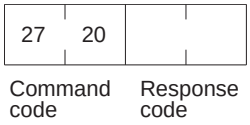

Parameters

Destination IP Address (Command)

The IP address (in hexadecimal) of the destination node for the PING command echo request packet.

Timeout Value (Command)

The wait time for the echo reply packet. The value is set in seconds. The timeout time is set at 20 seconds if the value is specified as 0. If the echo reply packet is not received within the set time limit, the code for a timeout error will be set as the results storage response code.

Remarks

PING Command

The PING command runs the echoback test using the ICMP protocol. When the PING command is executed, an echo request packet is sent to the remote node ICMP. Correct communications are confirmed when the returned response packet is received normally. The echo reply packet is automatically returned by the remote node ICMP. Refer to *9-2 PING Command*.

Response Codes

Response code	Description
0000	Normal (echo reply received from the remote node)
0205	Timeout error
1001	Command too large
1002	Command too small
1100	Zero destination address
220F	PING command currently being executed
2211	High traffic at Unit; cannot execute service.

11-3-19 IP ADDRESS TABLE WRITE

Writes the IP address table.

Command Block

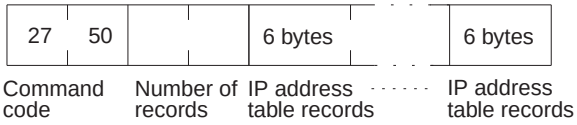

Response Block

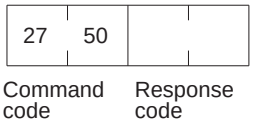

Parameters

Number of Records (Command)

The number of records to write is specified between 0000 and 0020 (0 to 32 decimal) in the command. If this value is set to 0, the IP address table will be cleared so that no records are registered.

IP Address Table Records (Command)

Specify the IP address table records. The number of records specified must be provided. The total number of bytes in the IP address table records is calculated as the number of records x 6 bytes/record. The configuration of the 6 bytes of data in each record is as shown in the following diagram.

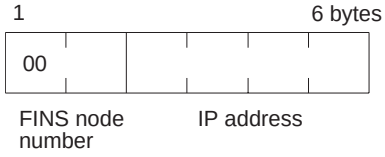

FINS Node Number

Node number for communications via the FINS command (hexadecimal).

IP Address

IP address used by TCP/IP protocol (hexadecimal).

Precautions

The new I/O address table records will not be effective until the PC is restarted or the Ethernet Unit is reset.

An error response will be returned if the IP address conversion method in the system mode settings is set for automatic generation.

Response Codes

Response code	Description
0000	Normal (echo reply received from the remote node)
1001	Command too large
1002	Command too small
1003	The number of records specified does not match the sent data length.
110C	The number of records is not between 0 and 32. The FINS node number is not between 1 and 126 The IP address is 0.
2307	IP address conversion method is set for automatic generation.

11-3-20 IP ADDRESS WRITE

Write the local IP address and the subnet mask in the CPU Bus Unit System Setup.

This command is supported for CJ-series Ethernet Units only.

Command Block

27	57		
Command code		IP address	Subnet mask

Response Block

27	57	
Command code		Response code

Parameters

IP Address (Command)

Specify the local IP address of the Ethernet Unit using 4 pairs of hexadecimal numbers in the range 00.00.00.00 to FF.FF.FF.FF (0.0.0.0. to 255.255.255.255 decimal). If 0.0.0.0 is specified, the local IP address set in the allocated words in the DM Area is enabled.

Example: 150.31.2.83

96	1F	02	53

Subnet Mask (Command)

Specify the local IP address of the Ethernet Unit using 4 pairs of hexadecimal numbers in the range 00.00.00.00 to FF.FF.FF.FF (0.0.0.0. to 255.255.255.255 decimal).

Example: 255.255.255.255

FF	FF	FF	00

Response Codes

Response code	Description
0000	Normal
1001	Command too large
1002	Command too small

Precautions

The local IP address and subnet mask set using this mask are written to the CPU Bus Unit System Setup for the Ethernet Unit. For details, refer to *4-2 CPU Bus Unit System Setup*.

The new local IP address and subnet mask settings will not be effective until the PC is restarted or the Ethernet Unit is reset.

11-3-21 IP ADDRESS TABLE READ

Reads the IP address table.

Command Block

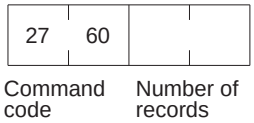

Response Block

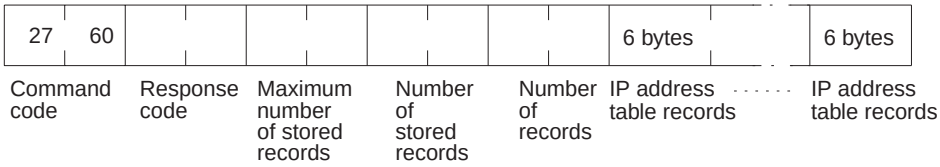

Parameters

Number of Records (Command, Response)

The number of records to read is specified between 0000 and 0020 (0 to 32 decimal) in the command. If this value is set to 0, the number of stored records is returned but the IP address table records are not returned. The response returns the actual number of records read.

Maximum Number of Stored Records (Response)

The maximum number of records that can be stored in the IP address table is returned. The maximum number of stored records is fixed at 32.

Number of Stored Records (Response)

The number of IP address table records stored at the time the command is executed is returned as a hexadecimal number.

IP Address Table Records (Response)

The number of IP address table records specified in the number of records parameter is returned. The total number of bytes in the IP address table records is calculated as the number of records x 6 bytes/record. The configuration of the 6 bytes of data in each record is as shown in the following diagram.

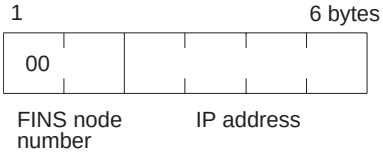

FINS Node Number

Node number for communications via the FINS command.

IP Address

IP number used by TCP/IP protocol.

Precautions

If the IP address table contains fewer records than the number specified in the *number of records* parameter, all the records contained in the IP address table when the command is executed will be returned and the command execution will end normally.

An error response will be returned if the IP address conversion method in the system mode settings is set to the automatic generation method.

Response Codes

Response code	Description
0000	Normal
1001	Command too large
1002	Command too small
2307	IP address conversion method is set to the automatic generation method.

11-3-22 IP ROUTER TABLE READ

Reads the IP router table.

Command Block

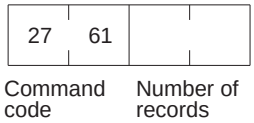

Response Block

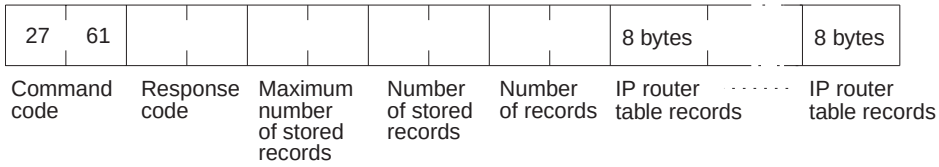

Parameters

Number of Records (Command, Response)

The number of records to read is specified between 0000 and 0008 (0 to 8 decimal) in the command. If this value is set to 0, the number of stored records will be returned but the IP router table records will not be returned. The response returns the actual number of records read.

Maximum Number of Stored Records (Response)

The maximum number of records that can be stored in the IP router table is returned. The maximum number of stored records is fixed at 0008 (8 records).

Number of Stored Records (Response)

The number of IP router table records stored at the time the command is executed is returned.

IP Router Table Records (Response)

The number of IP router table records specified in the *number of records* parameter is returned. The total number of bytes in the IP router table records is calculated as the number of records x 8 bytes/record. The configuration of the 8 bytes of data in each record is shown below.

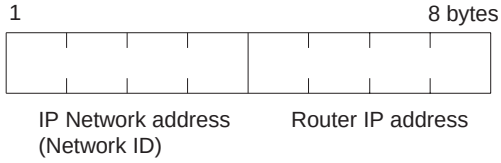

IP Network Address

The network ID from the IP address in hexadecimal. The network ID part corresponding to the address class (determined by the leftmost 3 bits; refer to *1-7 IP Addresses*) set here, is enabled.

Router IP Address

The IP address of a router connected to a network specified with IP addresses.

Precautions

If the IP router table contains fewer records than the number specified in the *number of records* parameter, all the records contained in the IP router table when the command is executed will be returned and the command execution will end normally.

Response Codes

Response code	Description
0000	Normal
1001	Command too large
1002	Command too small

11-3-23 PROTOCOL STATUS READ

Reads the Ethernet Unit protocol status.

Command Block

27	62
Command code	

Response Block

27	62		48 bytes	184 bytes	184 bytes	12 bytes
Command code		Response code	IP status	ICMP status	TCP status	UDP status

Parameters

IP Status (Response)

Twelve types of IP status information occupying 4 bytes each are returned in the following sequence. Each value is returned as an 8-digit hexadecimal value.

1,2,3...

1. Total number of IP packets received.
2. The number of IP packets discarded due to an error with the checksum in the packet header.
3. The number of IP packets discarded because the received packet was larger than the overall packet length value in the packet header.
4. The number of IP packets discarded because the minimum size of the IP header data could not be stored in the first short buffer when an attempt was made to store the packet. Refer to *11-3-24 MEMORY STATUS READ* and *Appendix F Buffer Configuration*.
5. The number of packets discarded for one of the following reasons:
   - The IP header length value in the IP header was smaller than the smallest size of the IP header.
   - The size of the first short buffer was smaller than the IP header length value in the IP header when storing the packet.
6. The number of IP packets discarded because the IP header length was larger than the overall packet length value in the packet header.
7. The number of fragmented packets received.
8. The number of received fragmented IP packets discarded because a queue for reassembly could not be secured.
9. The number of fragmented IP packets discarded because they could not be reassembled within 12 seconds after being received.
10. Always 0.
11. The number of packets addressed to other networks that have been discarded.
12. Always 0.

ICMP Status (Response)

Ten types (46 items) of ICMP status information occupying 4 bytes each are returned in the following sequence. Each value is returned as an 8-digit hexadecimal value.

1,2,3...

1. The number of times the ICMP error routine was called. The ICMP error routine uses ICMP packets to inform the source about errors. The routine is called when an illegal packet is received (error in IP option processing or error in relay processing) or if the object port does not exist when using UDP.
2. Always 0.

3. Always 0.
4. Total number of outputs of each packet type during ICMP output. The 19 statistical values are returned in the order shown below. Contents are defined for 13 types only; all other types contain 0. Only #0, #3, #14, #16, and #18 are counted by the Ethernet Unit.

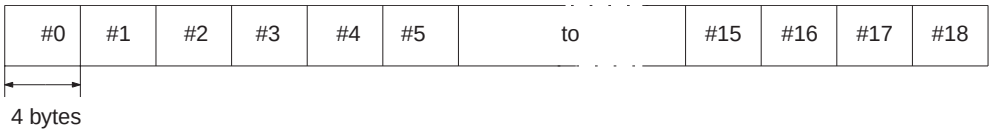

Type number	Description
#0	Echo reply
#1, #2	Undefined, always 0
#3	Destination unreachable
#4	Source quench
#5	Routing redirect
#6, #7	Undefined, always 0
#8	Echo
#9, #10	Undefined, always 0
#11	Time exceeded
#12	Parameter problem
#13	Time stamp
#14	Time stamp reply
#15	Information request
#16	Information request reply
#17	Address mask request
#18	Address mask reply

5. The number of received ICMP packets discarded because the type-indication code was out of range.
6. The number of received ICMP packets discarded because the overall packet length value in the packet header was smaller than the minimum ICMP packet length.
7. The number of received ICMP packets discarded because of an incorrect checksum value in the packet header.
8. The number of received ICMP packets discarded because the ICMP header length value in the packet header did not match the lengths of individual header types.
9. The number of responses returned to received ICMP packets requiring a response.

10. Total number of inputs of each packet type during ICMP input. The 19 statistical values are returned in the order shown below. Contents are defined for 13 types only; all other types contain 0.

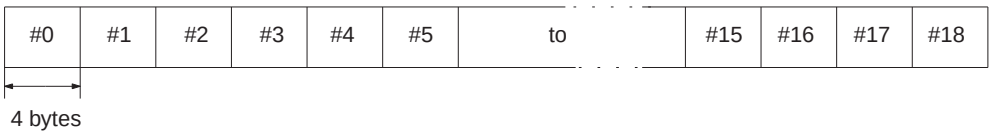

Type number	Description
#0	Echo reply
#1, #2	Undefined, always 0
#3	Destination unreachable
#4	Source quench
#5	Routing redirect
#6, #7	Undefined, always 0
#8	Echo
#9, #10	Undefined, always 0
#11	Time exceeded
#12	Parameter problem
#13	Time stamp
#14	Time stamp reply
#15	Information request
#16	Information request reply
#17	Address mask request
#18	Address mask reply

TCP Status (Response)

Three types (46 items) of TCP status information occupying 4 bytes each are returned in the following sequence. Each value is returned as an 8-digit hexadecimal value.

1) Connection Information (60 Bytes)

Fifteen items are returned in the following sequence:

1,2,3...

1. The number of times active connections were correctly established.
2. The number of times a SYN packet was received while waiting to establish a passive connection.
3. The number of times active or passive connections were correctly established.
4. The number of times an established connection was cut off.
5. The number of times the connection wait status was cut off.
6. The number of times protocol control blocks or other actively allocated structures were released.
7. The number of segments for the round-trip time (time from segment transmission to ACK).
8. The number of times the round-trip time was changed.
9. The number of times a delayed acknowledgement (ACK) was sent. If the order of the received segments is reversed, ACK is sent with a packet of data separate from ACK (response to input data, etc.) or is immediately sent with the ACK for other data.
10. The number of times the connection was cut off because no ACK was returned after several resend attempts.

11. The number of times no ACK was returned within the resend timer set time. (The resend timer sets the maximum time limit between the data being output and ACK being returned.)
12. The number of times no window advertisement is received within the time set on the duration timer. (The duration timer sets the maximum time limit for a window advertisement to be received if the transmission window is smaller than necessary and the resend timer is not set. If no window advertisement is received within the time limit, the number of segments permitted by the transmission window are sent. If the transmission window is set to 0, a window probe (1 octet of data) is sent before the timer restarts.)
13. The number of times no segment was sent or received within the time set on the hold timer.
14. The number of times the hold packet is resent. (Always 0.)
15. The number of times the hold packet is sent without response before the connection is cut off.

2) Send Information (40 Bytes)

Ten information items are returned in the following sequence:

1,2,3...

1. The total number of packets sent.
2. The number of data packets sent.
3. The number of data bytes sent.
4. The number of data packets resent.
5. The number of data bytes resent.
6. The number of ACK packets sent.
7. The number of window probes (1 octet of data) sent.
8. The number of emergency data packets sent. (Always 0.)
9. The number of window advertisement packets sent.
10. The number of control packets (SYN, FIN, RST) sent.

3) Receive Information

Twenty-one information items are returned in the following sequence:

1,2,3...

1. The total number of packets received.
2. The number of packets received continuously.
3. The number of bytes received continuously.
4. The number of received packets discarded due to an incorrect checksum.
5. The number of packets discarded because the TCP header was smaller than the minimum size for a TCP header or was larger than the IP packet.
6. The number of packets discarded because the TCP header and IP header could not be stored in the first short buffer.
7. The number of resent packets received.
8. The number of bytes in the resend packets.
9. The number of duplicated resend packets received.
10. The number of bytes in the duplicated resend packets received.
11. The number of out-of-range data packets received. (Always 0.)
12. The number of bytes in the out-of-range data packets received. (Always 0.)
13. The number of packets where the data was larger than the window.
14. The number of bytes in the packets where the data was larger than the window.
15. The number of packets received after closing.

16. The number of window probe packets received.
17. The number of resent ACK packets received.
18. The number of ACK packets received with no data set.
19. The number of ACK packets received.
20. The number of ACK packets received for received transmission acknowledgements (ACK).
21. The number of window advertisement packets received.

UDP Status (Response)

Three items of UDP information occupying 4 bytes each are returned in the following sequence. Each value is returned as an 8-digit hexadecimal value.

1,2,3...

1. The number of packets discarded because the size of the first short buffer was smaller than the minimum size (28) of the IP header and UDP header when the packet was stored.
2. The number of packets discarded due to an incorrect checksum in the UDP header.
3. The number of packets discarded because the IP overall length in the IP header was shorter than the UDP overall length in the UDP header.

Precautions

All the above values are set to 0 if network operation stops due to incorrect settings in the system setup.

Counting will be stopped when a count reaches the maximum value. The maximum values are as follows:

IP, ICMP, or UDP status: 7FFFFFFF (2,147,483,647 decimal)
TC status: FFFFFFFF (4,294,967,295 decimal)

Response Codes

Response code	Description
0000	Normal
1001	Command too large

11-3-24 MEMORY STATUS READ

Reads the status of the Ethernet Unit's network memory. The network memory contains 196K bytes that are used as required as for communications buffers for communications servicing. The network memory consists of 1,056 short buffers (128 bytes each) and 64 long buffers (1,024 bytes each). Refer to *Appendix C Buffer Configuration*.

Command Block

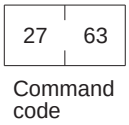

Response Block

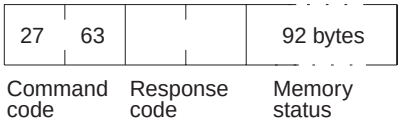

Parameters

Memory Status (Response)

A total of 23 data items in six areas are returned in the following order. Each item consists of 4 bytes.

1,2,3...

1. Short Buffer Application: Two items are returned (8 bytes).
   a) The number of short buffers currently being used.
   b) The number of short buffers in the system (fixed at 1,056 decimal).

2. Short Buffer Application by Type: Thirteen items are returned (52 bytes).
   a) The number of short buffers used for storing communications data.
   b) The number of short buffers used for protocol headers (TCP, UDP, IP, ICMP, ARP)
   c) The number of short buffers used in socket structures
   d) The number of short buffers used as protocol control blocks
   e) The number of short buffers used for routing tables
   f) Not used (always 0)
   g) Not used (always 0)
   h) The number of short buffers used for IP fragment re-assembly queue headers
   i) The number of short buffers used for storing socket addresses
   j) Not used (always 0)
   k) The number of short buffers used for storing socket options
   l) The number of short buffers used for storing access rights
   m) The number of short buffers used for storing interface addresses
3. Long Buffer Application: Two items are returned (8 bytes).
   a) The number of long buffers currently being used.
   b) The number of long buffers in the system (fixed at 64 decimal).
4. Not Used: Always 0. (4 bytes)
5. Network Memory Application: Two items are returned.
   a) The number of bytes used (in K bytes)
   b) The percentage used.
6. Memory Exhaustion Log (12 bytes)

   Counts for the following values indicate a high load on the Ethernet Unit. These high loads may be caused by problems in communications, particularly FINS communications and UDP sockets. If these values are consistently high, check your applications.
   a) The number of times an attempt was made to secure a short buffer without WAIT when there were no short buffers available.
   b) The number of times an attempt was made to secure a short buffer with WAIT when there were no short buffers available.
   c) The number of times an attempt was made to release and secure a short buffer already being used by another socket when there were no short buffers available.

Precautions

All the above values are set to 0 if Ethernet communications functions are stopped due to improper settings in the system setup.

These values are cleared when the Ethernet Unit is started or reset. Values will be counted only until the maximum values are reached.

Response Codes

Response code	Description
0000	Normal
1001	Command too large

11-3-25 SOCKET STATUS READ

Reads the Ethernet Unit network socket status.

Command Block

27	64
Command code	

Response Block

27	64			32 bytes		32 bytes
Command code		Response code		Socket status		Socket status

Parameters

Socket Status (Response)

Returns eight types of information in records of 32 bytes each. A maximum of 64 records can be returned. The format of each record is shown below.

Protocol (4 bytes)

The protocol used for the socket is returned as a number.
00 00 00 06: TCP; 00 00 00 11: UDP

Receive Queue (4 bytes)

The number of bytes in the reception queue.

Send Queue (4 bytes)

The number of bytes in the send queue.

Local IP Address (4 bytes)

The local IP address allocated to the socket.

Local Port Number (4 bytes)

The local port number allocated to the socket.

Remote IP Address (4 bytes)

The remote IP address allocated to the socket.

Remote Port Number (4 bytes)

The remote port number allocated to the socket.

TCP Transitions (4 bytes)

The TCP connection status is returned as one of the numbers shown in the following table. Refer to *Appendix D TCP Status Transitions* for a diagram of transitions.

Number	Stage	Status
00 00 00 00	CLOSED	Closed.
00 00 00 01	LISTEN	Waiting for connection.
00 00 00 02	SYN SENT	SYN sent in active status.
00 00 00 03	SYN RECEIVED	SYN received and sent.
00 00 00 04	ESTABLISHED	Already established.
00 00 00 05	CLOSE WAIT	Received FIN, waiting to close.
00 00 00 06	FIN WAIT 1	Completed and FIN sent.
00 00 00 07	CLOSING	Completed and exchanged FIN. Awaiting ACK.
00 00 00 08	LAST ACK	FIN sent and completed. Awaiting ACK.
00 00 00 09	FIN WAIT 2	Close completed and ACK received. Awaiting FIN.
00 00 00 0A	TIME WAIT	After closing, pauses twice the maximum segment life (2MSL).

Precautions

All the above values are set to 0 if Ethernet communications functions are stopped due to improper settings in the system setup.

Response Codes

Response code	Description
0000	Normal
1001	Command too large

11-3-26 ADDRESS INFORMATION READ

Reads FINS node numbers and IP addresses

Command Block

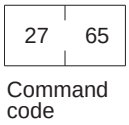

Response Block

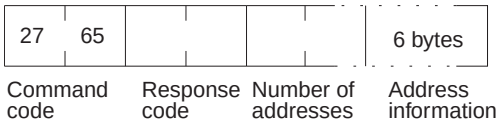

Parameters

Number of Addresses (Response)

The number of pairs of FINS node numbers and IP addresses being returned. The Ethernet Unit is always 0001 (1 decimal).

Address Information

Pairs of FINS node numbers and IP addresses. Each pair requires 6 bytes and has the following configuration.

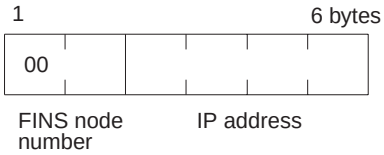

FINS Node Number

Node number set on the Ethernet Unit (hexadecimal).

IP Address

IP address set on the Ethernet Unit (hexadecimal).

Response Codes

Response code	Description
0000	Normal
1001	Command too large

11-3-27 IP ADDRESS READ

Reads the local IP address and subnet mask in the CPU Bus Unit System Setup and the FINS node number. The values read with this command, however, are not necessarily the settings actually used for operation. The settings that are actually used for operation can be confirmed using CONTROLLER DATA READ (page 218) and ADDRESS INFORMATION READ (page 248).

This command is supported for CJ-series Ethernet Units only.

Command Block

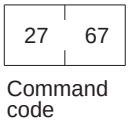

Response Block

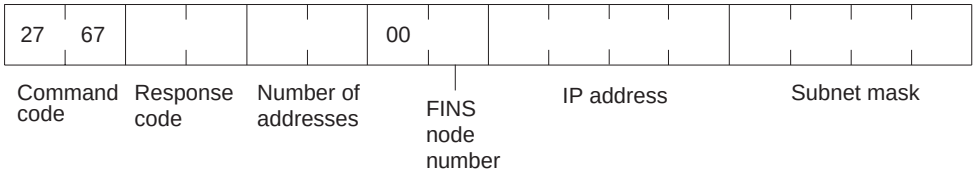

Parameters

Number of Addresses (Response)

The number of sets of FINS node numbers, IP addresses, and subnet masks being returned. The Ethernet Unit is always 0001 (1 decimal).

FINS Node Number (Response)

Node number set on the Ethernet Unit (hexadecimal).

IP Address

The local IP address set in the CPU Bus Unit System Setup for the Ethernet Unit is returned in order starting from the leftmost bytes in hexadecimal. If the local IP address set in the allocated words in the DM Area is enabled, 0.0.0.0 is returned.

Subnet Mask (Response)

The subnet mask set in the CPU Bus Unit System Setup for the Ethernet Unit is returned in order starting from the leftmost bytes in hexadecimal.

Response Codes

Response code	Description
0000	Normal
1001	Command too large

Appendix A
Network Installation

Basic Installation Precautions

- Take the greatest care when installing the Ethernet System, being sure to follow ISO 8802-3 specifications. You must obtain a copy of these specifications and be sure you understand them before attempting to install an Ethernet System. Unless you are already experienced in installing communications systems, we strongly recommend that you employ a professional to install your system.
- Do not install Ethernet equipment near sources of noise. If noise-prone environments are unavoidable, be sure to take adequate measures against noise interference, such as installing network components in grounded metal cases, using optical links in the system, etc. Further information on measures that can be taken against noise is given later in this section.

Recommended Products

The following products are recommended for use with the CS1W-ETN01 Ethernet Unit.

CS1W-ETN01 (10Base-5)

Part	Company	Model
Transceiver	Hirakawa Hewtech Corp.	MTX-210TZ
	Mitsubishi Cable Industries,Ltd.	ET-10081
Transceiver cable	Mitsubishi Cable Industries,Ltd.	Transceiver cables (molded type)
24-VDC Power Supply	OMRON	S82J Series

CS1W-ETN11, CJ1W-ETN11 (10Base-T)

Part	Maker	Model number	Specifications	Inquires
Hub	Allied Telesis	RH509E	9-port hub	Allied Telesis (0120) 86-0442 (in Japan only)
		MR820TLX	9-port hub with 10Base-5 backbone port	
Twisted-pair cable	---	---	Category 3, 4, or 5 UTP (unshielded twisted-pair) cable	---

CS1W-ETN01 (10Base-5) Precautions

Coaxial Cable Installation Precautions

Basic Precautions

- As a rule, always lay coaxial cables indoors. Laying coaxial cables outdoors requires special measures that should be performed only by a professional. If coaxial cable must be used outdoors, request the work from a professional.
- Attach a terminator to each end of the coaxial cable.
- Cover all exposed metal portions of the coaxial cable except ground points with protective covers or PVC tape to prevent contact with grounds or other metal objects.

- Ground the external shield of the coaxial cable to 100 W or less using AWG 14 wire (cross-sectional area of 2 mm^2) or better and a ground cable length of 20 m or less. Ground each segment of the network at one location only. Do not use the same ground for other equipment.
- The physical properties (e.g., minimum bending radius) of coaxial cable vary with the manufacturer. Follow all recommendations and specifications of the manufacturer.

Environmental Precautions

- Do not install coaxial cables together with power cables.
- Do not install coaxial cable near sources of noise.
- Do not install coaxial cable in environments subject to excessive dirt, dust, oil mist, etc.
- Do not install coaxial cable in environments subject to high temperatures or high humidity.

Terminator Installation Precautions

- You must attach a Terminator to each end of the coaxial cable for communications to be possible.
- Insulate Terminators when attaching them to be sure they do not come into contact with metal objects.

Transceiver Installation Precautions

- Transceivers can be attached to coaxial cables only at intervals of 2.5 m. These locations should be marked on the cable.
- Connection methods can vary with the manufacturer of the cable. Follow all recommendations and specifications of the manufacturer.
- Mount the transceiver onto an insulating object, such as a wooden board.
- Ground the transceiver through the shield of the transceiver cable and through the Ethernet Unit.
- Do not install transceivers near sources of noise.
- Do not install coaxial cable in environments subject to excessive dirt, dust, oil mist, etc.
- Do not install coaxial cable in environments subject to high temperatures or high humidity.

Transceiver Cable Installation Precautions

- Make sure that the transceiver cable is firmly and completely connected to both the transceiver and the Ethernet Unit. Be sure that the slide latches are engaged.
- Do not install transceiver cables together with power cables.
- Do not install transceiver cable near sources of noise.
- Do not install transceiver cable in environments subject to high temperatures or high humidity.

Grounding

- Ground all devices requiring grounding to 100 W or less using AWG 14 wire (cross-sectional area of 2 mm^2) or better and a ground cable length of 20 m or less. Electrical shock can occur between ungrounded devices in the system. The lack of proper grounds can also corrupt data.
- Use one safety ground on each segment of the network.
- Inductive voltages can be generated due to lightning surges when coaxial cable is installed outdoors, requiring special measures. Request outdoor installation from a professional.

Transceiver Installation Examples

The following illustrations show examples of installing transceivers in the ceiling and under the floor.

Ceiling Installation

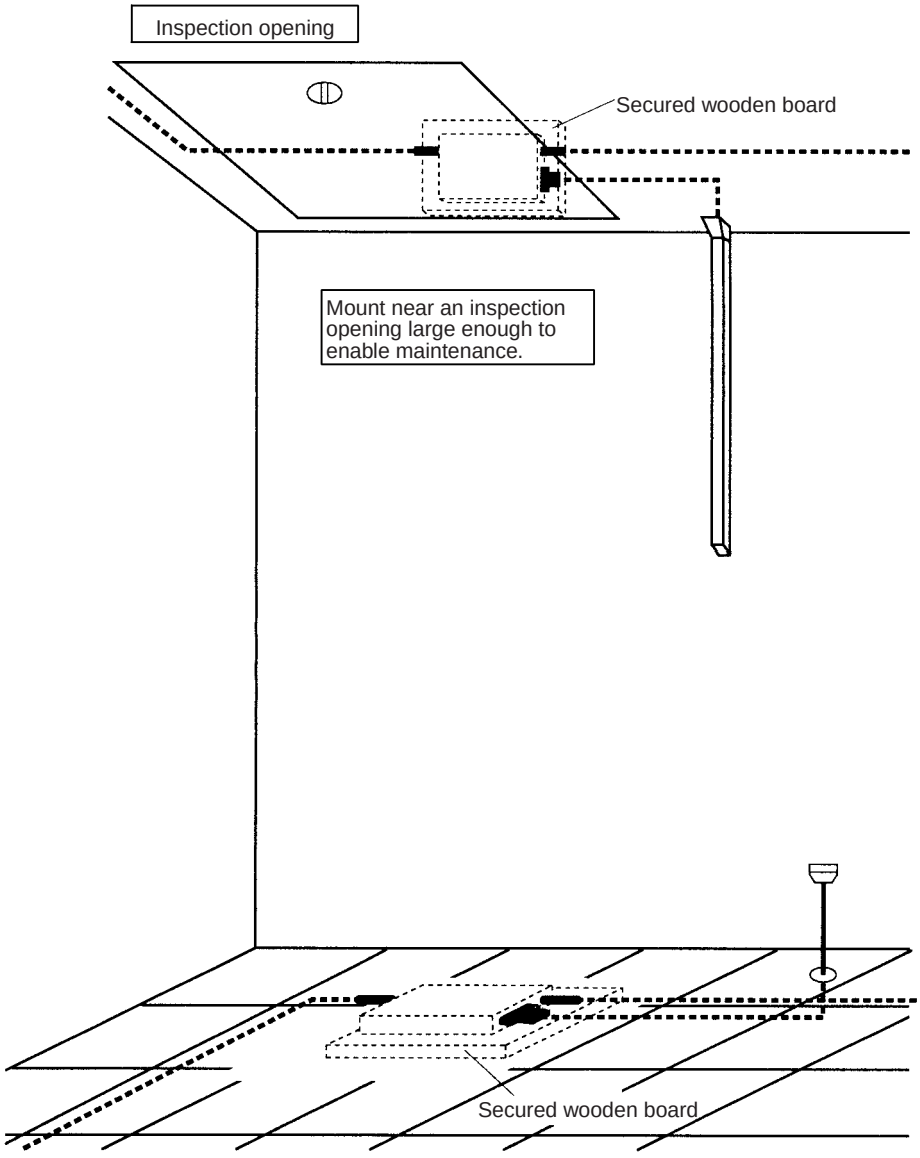

Free-access Floor Installation

Ceiling Installation Examples

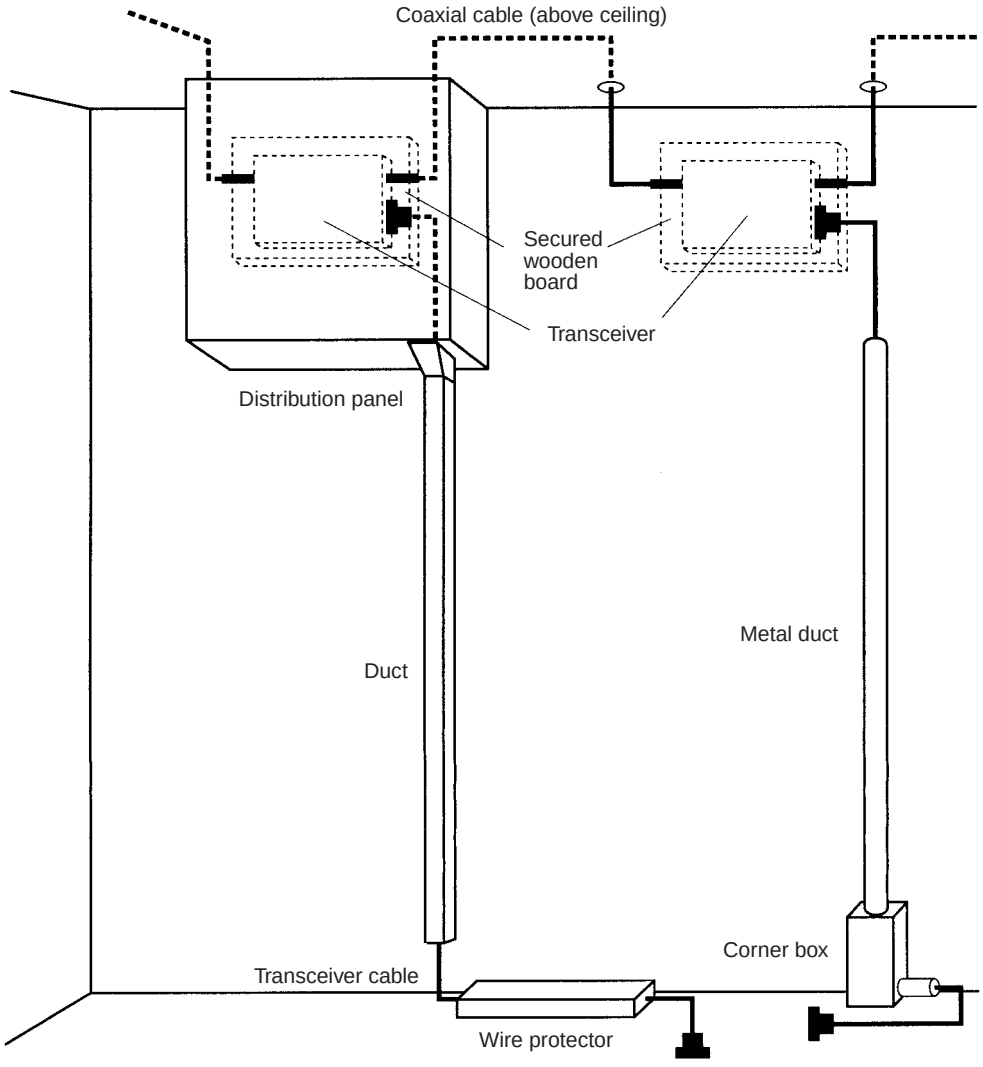

Installation Examples for Noise-prone Environments

Ethernet networks do not withstand noise very well and require special installation measures if installed where subject to noise. The remainder of this section describes measures for dealing with noise.

Note Although the measures described in this section are suitable to certain levels of noise, programming retries in communications will still be required. Although some protocols provide for automatic retries, UDP/IP (FINS communications and UDP sockets) does not, and the user must program retries in user applications.

Metal Ducts

1. Place the coaxial cable in metal ducts.
2. Place transceivers into metal boxes, placing a wooden board or other insulating board between the box and the transceiver. The transceiver and the metal box must be electrically insulated from each other.
3. If the transceiver cable is also in a noise-prone area, place it into a metal duct as well.

4. Refer to the *CS/CJ-series Programmable Controllers Operation Manual (W339)* for information on wiring inside distribution boxes.

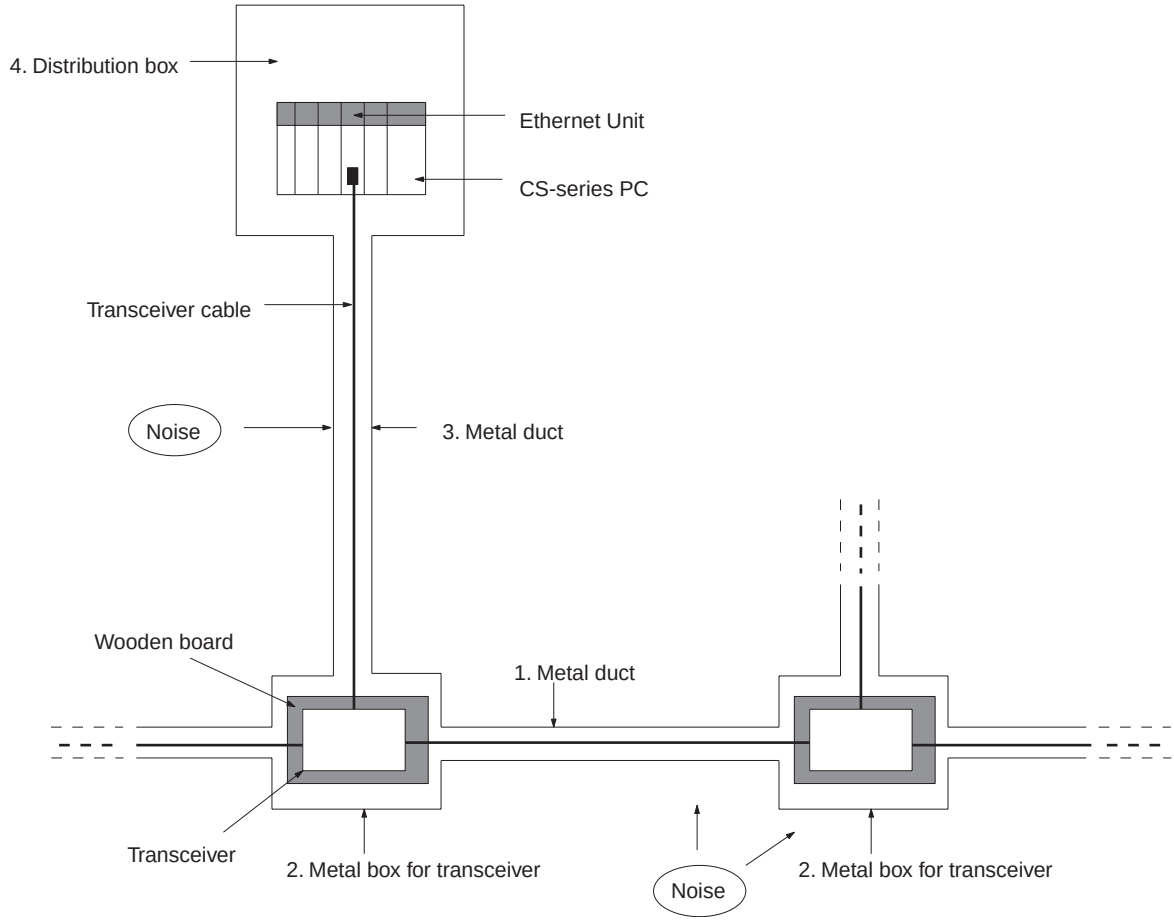

Note 1. Cover all metal portions of cables with insulating tape to be sure they do not come into contact with the metal ducts or boxes.

2. Securely ground all distribution boxes and metal boxes around transceivers. The lower the ground resistance, the more effective the shields will be.

3. The twisted-pair cable for 10Base-T is not shielded, and the hub is designed for use in OA environments. In environments subject to noise, we recommend the use of 10Base-5 Ethernet.

Multipoint Transceivers

Multipoint transceivers can be used to eliminate the need for coaxial cable (which is easily affected by noise) and replace it with transceiver cable as shown in the following diagram. This will increase overall system resistance to noise.

Note Up to two sets of multipoint transceivers can be used in a network. The length of the network will be limited to the maximum length of transceiver cable.

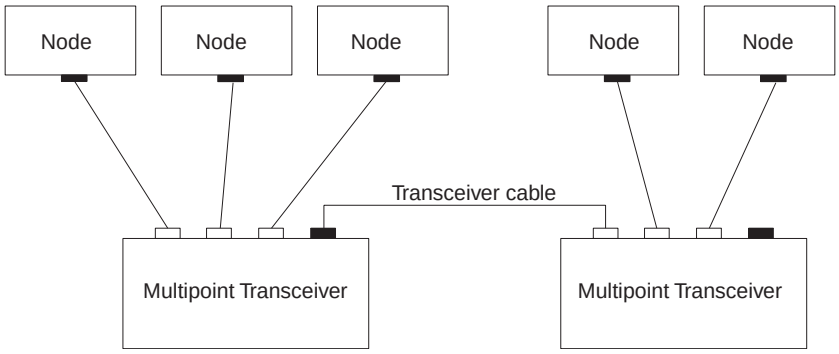

Optical Ethernet Systems

Some manufacturers provide optical fiber components for Ethernet networks to provide high resistance to noise. The following illustrations show some simple examples of optical installations. See the manufacturer for specifics.

Use as Noise Countermeasure

The following illustration shows how optical components can be used to convert to optical fiber cable through areas highly prone to noise.

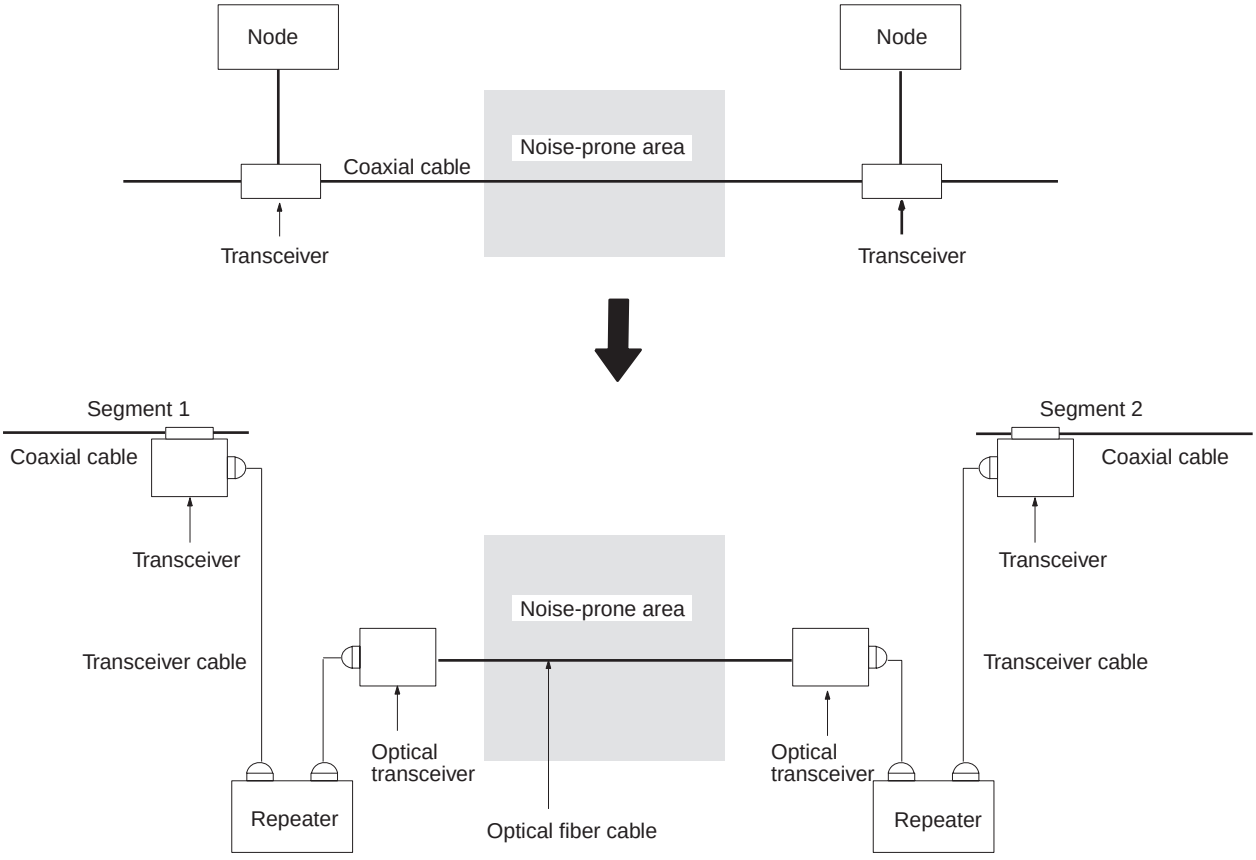

Outdoor Installations

The following example shows how optical fiber cable can be used to connect a network between two buildings, eliminating possible adverse affects of lightning.

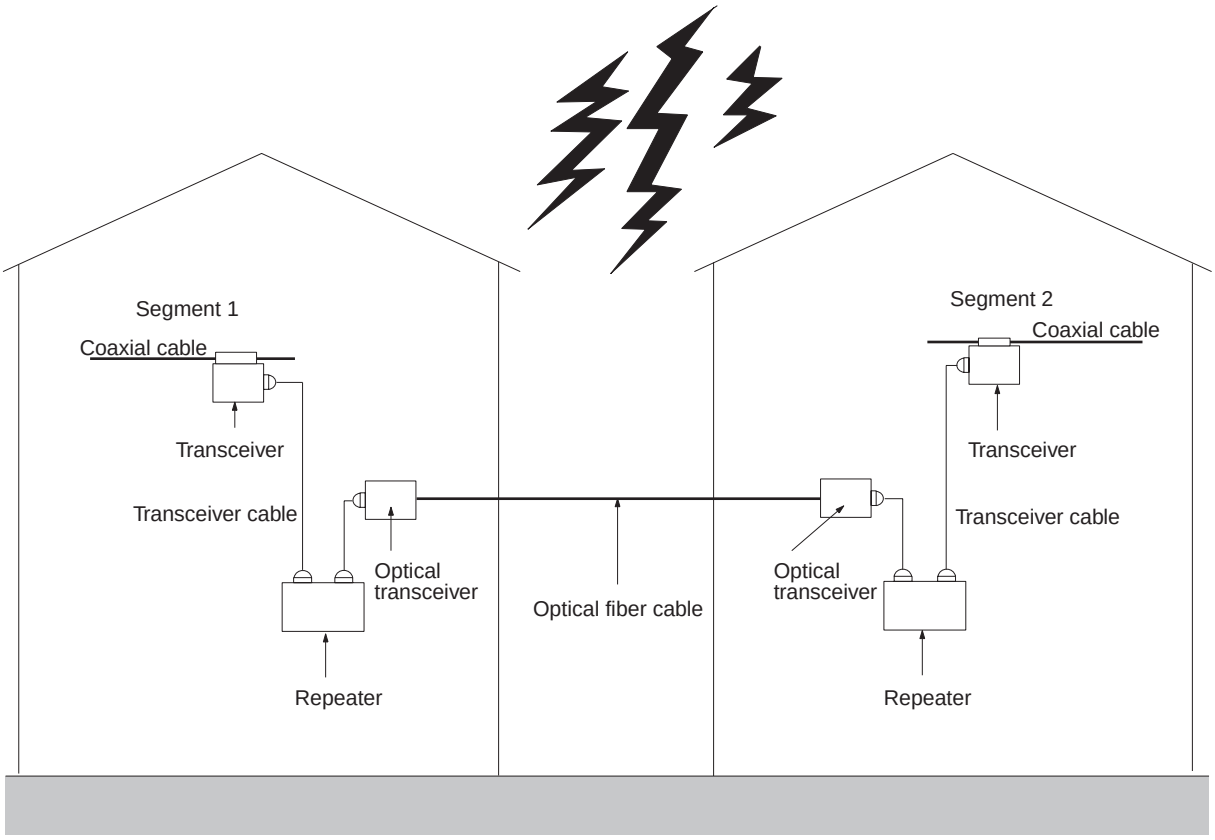

Note Consult with the manufacturer for details on optical Ethernet devices.

CS1W-ETN11, CJ1W-ETN11 (10Base-T) Precautions

Precautions on Laying Twisted-pair Cable

Basic Precautions

- Press the cable connector in firmly until it locks into place at both the hub and the Ethernet Unit.
- After laying the twisted-pair cable, check the connection with a 10Base-T cable tester.

Environment Precautions

- The twisted-pair cable for 10Base-T is not shielded, and the hub is designed for use in OA environments. In environments subject to noise, we recommend the use of 10Base-5 Ethernet.
- Do not lay the twisted-pair cable together with high-voltage lines.
- Do not lay the twisted-pair cable near devices that generate noise.
- Do not lay the twisted-pair cable in locations subject to high temperatures or high humidity.
- Do not lay the twisted-pair cable in locations subject to excessive dirt and dust or to oil mist or other contaminants.

Hub Installation Environment Precautions

- Do not install the hub near devices that generate noise.
- Do not install the hub in locations subject to high temperatures or high humidity.
- Do not install the hub in locations subject to excessive dirt and dust or to oil mist or other contaminants.

Hub Connection Methods

If more hub ports are required, they can be added by connecting more than one hub. There are two possible connection methods for hubs: Cascade and stacked.

Cascade Connections

- Connect two hubs to each other as follows: Connect an MDI port to an MDI-X port with a straight cable; connect two MDI ports with a cross cable; and connect two MDI-X ports with a cross cable.

Note It is very difficult to distinguish cross cables and straight cables by appearance. Incorrect cables will cause communications to fail. We recommend using straight cables whenever possible.

- With cascade connections, up to 5 segments can be connected using up to 4 repeaters (i.e., 4 hubs).

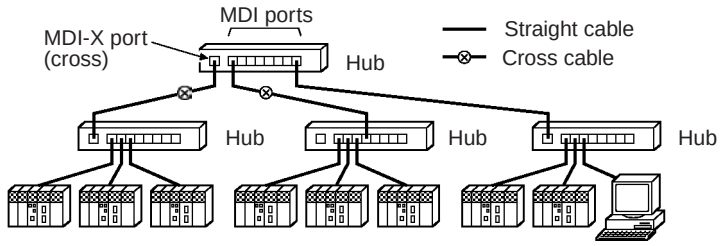

Stack Connections

- Connect the hubs using special cables or special racks.
- Normally there is no limit to the number of hubs in a stack, and each stack is treated as one hub. Some hubs, however, are limited in the number of hubs per stack.

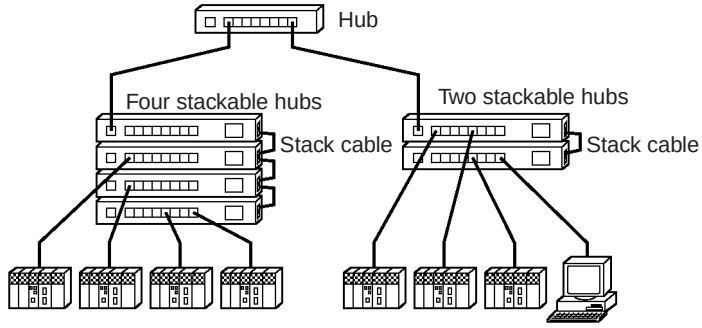

Using Contact Outputs (Common to All Units)

Communications errors can occur when Contact Output Units are mounted to the same Rack or connected to the same PC as an Ethernet Unit due to noise generated by the contact outputs. Use one or more of the following measures when installing Contact Output Units and Ethernet Units on the same Rack.

Mounting Location

Mount (or connect) any Contact Output Units as far away from the Ethernet Unit as possible.

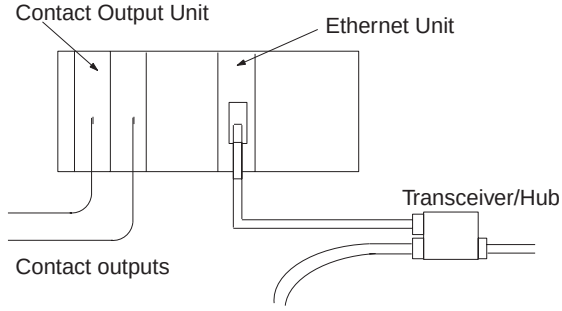

Cable Location

Separate the transceiver cable or twisted-pair cable connecting the Ethernet Unit as far from the wiring to the Contact Output Units as possible. The coaxial cable must also be placed as far away from the Contact Output Units and their wiring as possible.

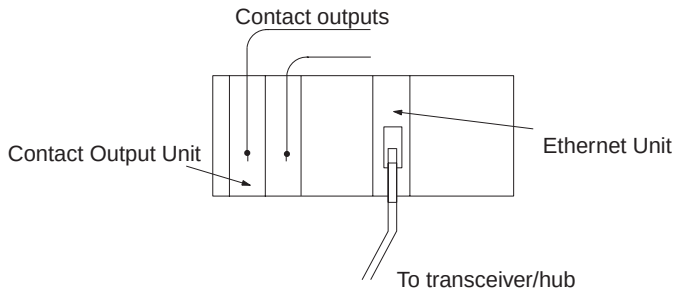

Transceiver/Hub Measures

Attach several ferrite cores designed for EMI countermeasures on the transceiver cable or twisted-pair cable near the transceiver/hub. The transceiver must also be placed as far away from the Contact Output Units and their wiring as possible.

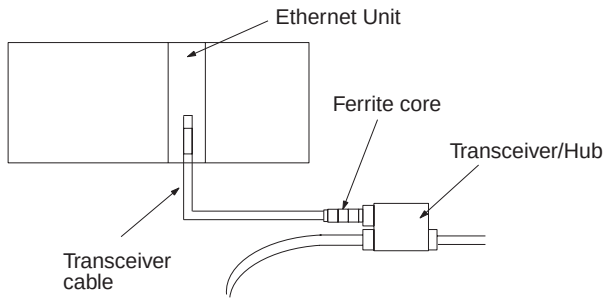

Appendix B

Ethernet Network Parameters

Parameter	Value	Description
TCP send buffer	4,096 bytes	Maximum capacity of the TCP send buffer
TCP receive buffer	4,096 bytes	Maximum capacity of the TCP receive buffer
UDP send buffer	9,000 bytes	Maximum capacity of the UDP send buffer
UDP receive buffer	9,016 bytes	Maximum capacity of the UDP receive buffer
RAW send buffer	2,048 bytes	Maximum capacity of the RAW send buffer
RAW receive buffer	2,048 bytes	Maximum capacity of the RAW receive buffer
FINS receive buffer	16,383 bytes	Maximum capacity of the FINS receive buffer
Hold timer	75 s (12 min max.)	The hold timer is used for active open processing of TCP sockets. A ETIMEDOUT error will occur if connection is not completed within 75 s.
Resend timer	Initial value: 1 s Maximum value: 64 s	The resend timer is used to monitor completion of reception of arrival confirmations when transferring data via socket services, including FTP server and mail transfer TCP sockets. If the timer setting is exceeded before arrival confirmation is received, data is resent. Resends are performed from the first timeout (1 s) through the 12th timeout (64 s). A ETIMEDOUT error will occur after the 12th timeout.
Continue timer	Initial value: 5 s Maximum value: 60 s	The continue timer starts if preparations have been completed to send data but the send window is too small (either 0 or too small) to send the data and the remote node has not requested that communications be restarted. Confirmation of the window size is requested from the remote node when the continue timer times out. The initial value of the timer is 5 s and confirmation processing will continue consecutively with increasingly longer times until the maximum time of 60 s is reached.
2MSL timer	60 s	The 2MSL timer starts at the TCP socket that first closes the socket and will run for 60 s in the TIME_WAIT status.
IP reassemble timer	12 s	A fragmented IP packet is discarded if it cannot be reassembled within 12 seconds.
ARP timer	20 min/3 min	If a complete ARP table entry (with an Ethernet address) is not referred to for 20 minutes, it is removed from the table. An incomplete ARP table entry (no response yet returned to the ARP request) is removed from the table after 3 minutes.
Window size	4,096 bytes	The initial value of the maximum capacity used to control the convergence of TCP sockets. Actually, the node negotiates with the remote node and uses the smaller of the values for the two nodes. The window size will fluctuate with the available space in the TCP reception buffers of the remote node when processing communications.
Fragment size	1,500 bytes	UDP data is separated into 1,472-byte fragments. The remaining 28 bytes are for the IP header.
Segment size	1,024 bytes	TCP data is separated into 1,024-byte units, unless the segments are different, in which case it will be separated into 536-byte units.
TTL (Time to Live)	30	Decremented each time an IP router is passed.

Appendix C

Buffer Configuration

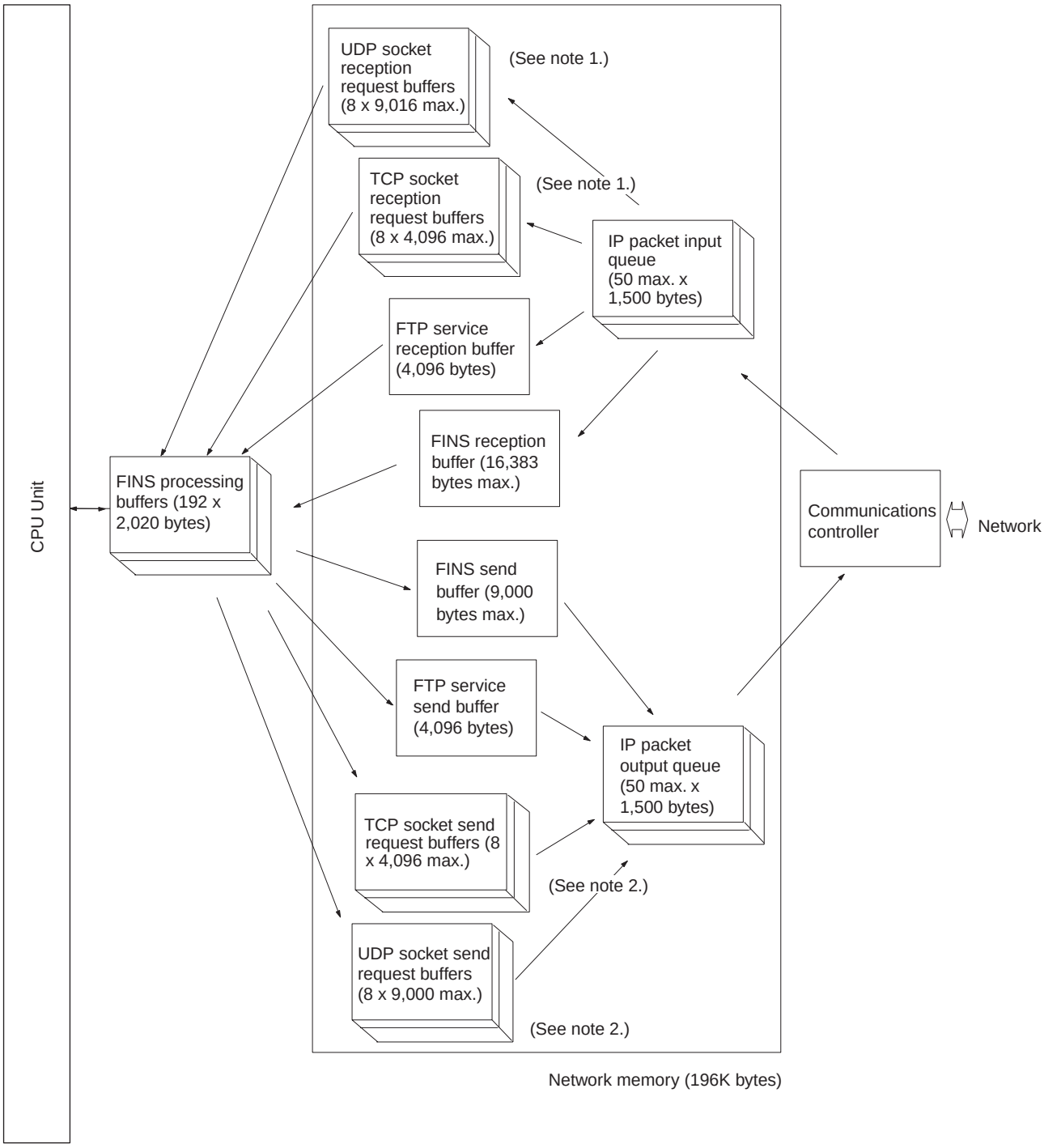

Network Memory

Most of the buffers used for communications servicing by the Ethernet Unit are administered in a buffer configuration called network memory. Network memory consists of 196K bytes of memory divided into short and long buffers. The use of short and long buffers is determined by the status of the various services when the Ethernet Unit is running. The capacity of all buffers cannot be used due to limits in the mounted memory capacity. The status of the short and long buffers can be accessed by execution the FINS command MEMORY STATUS READ (2763).

Note 1. The status of UDP and TCP socket reception request buffers can be accessed by executing the FINS command SOCKET STATUS READ (2764).

2. The status of UDP and TCP socket send request buffers can be accessed by executing the FINS command SOCKET STATUS READ (2764).

Appendix D

TCP Status Transitions

The TCP socket status can be confirmed using the socket status data returned for the FINS command SOCKET STATUS READ (2764).

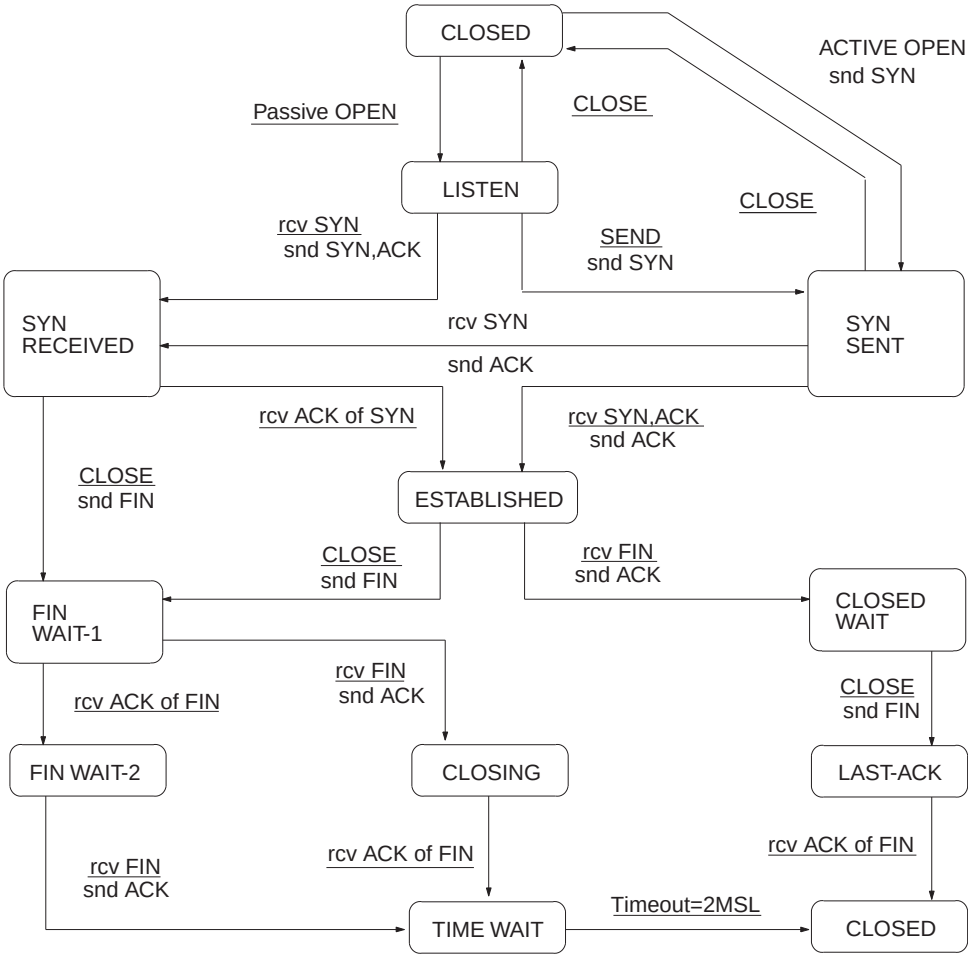

Appendix E

Auxiliary Area Data

The following table and descriptions cover the words and bits in the Auxiliary Area of PC memory that are related to the Ethernet Unit.

Read-only Bits/Words

Word(s)	Bit(s)	Name	Function	Settings
A202	A20200 to A20207	Communications Port Enabled Flags	Bits A20200 to A20207 turn ON when a network instruction (SEND, RECV, CMND, or PMCR) can be executed with the corresponding port number. Bits 00 to 07 correspond to communications ports 0 to 7.	0: Network communications running 1: No network communications running
A203 to A210	---	Communications Port Completion Codes	These words contain the completion codes for the corresponding port numbers when network instructions (SEND, RECV, CMND, or PMCR) have been executed. Words A203 to A210 correspond to communications ports 0 to 7.	0000: No error Not 0000: Error code
A219	A21900 to A21907	Communications Port Error Flags	Bits A21900 to A21907 turn ON when an error occurred during execution of a network instruction (SEND, RECV, CMND, or PMCR). Bits 00 to 07 correspond to communications ports 0 to 7.	0: Normal end 1: Error end
A302	A30200 to A30215	CPU Bus Unit Initializing Flags	Bits A30200 through A30215 turn ON while the corresponding CPU Bus Units (Units #0 through #15, respectively) are initializing. The bits will turn ON either when power is turned ON or when a CPU Bus Unit Restart Bit (A50100 to A50115) is turned ON.	0: Not initializing 1: Initializing (System will automatically turn the flag OFF when initialization has been completed.)
A402	A40203	CPU Bus Unit Setting Error Flag (Non-fatal error)	Bit A40203 is turned ON when the CPU Bus Units actually installed differ from the Units registered in the I/O table. The ERR/ALM indicator on the front of the CPU Unit will flash, but CPU operation will continue. The unit number of the CPU Bus Unit involved is stored in word A427.	0: No setting error 1: Setting error
	A40207	CPU Bus Unit Error Flag (Non-fatal error)	Bit A40207 is turned ON when an error occurs during the transmission of data between the CPU and CPU Bus Units. The ERR/ALM indicator on the front of the CPU Unit will flash, but CPU operation will continue. The Unit where the error occurred will stop. The unit number of the CPU Bus Unit involved is stored in word A422.	0: No unit number error 1: Unit number error
A403	A40300 to A40308	Memory Error Location	When a memory error occurs, the Memory Error Flag (A40115) is turned ON and one of the following flags is turned ON to indicate the memory area where the error occurred. A40300: User program A40304: PC Setup A40305: Registered I/O Table A40307: Routing Table A40308: CPU Bus Unit Settings The ERR/ALM indicator on the front of the CPU Unit will light and CPU operation will stop.	0: Normal 1: Error

Word(s)	Bit(s)	Name	Function	Settings
A410	A41000 to A41015	CPU Bus Unit Number Duplication Flags	The Duplication Error Flag (A40113) and the corresponding flag in A410 will be turned ON when a CPU Bus Unit's unit number has been duplicated. Bits 00 to 15 correspond to unit numbers 0 to F. The ERR/ALM indicator on the front of the CPU Unit will light and CPU operation will stop.	0: No duplication 1: Duplication
A417	A41700 to A41715	CPU Bus Unit Error, Unit Number Flags	When an error occurs in a data exchange between the CPU Unit and a CPU Bus Unit, the CPU Bus Unit Error Flag (A40207) and the corresponding flag in A417 are turned ON. Bits 00 to 15 correspond to unit numbers 0 to F. The ERR/ALM indicator on the front of the CPU Unit will flash, but CPU operation will continue.	0: No error 1: Error
A427	A42700 to A42715	CPU Bus Unit Setting Error, Unit Number Flags	When a CPU Bus Unit Setting Error occurs, A40203 and the corresponding flag in A27 are turned ON. Bits 00 to 15 correspond to unit numbers 0 to F. The ERR/ALM indicator on the front of the CPU Unit will flash, but CPU operation will continue.	0: No setting error 1: Setting error

Read/Write Bits

Word	Bits	Name	Description	Settings
A501	A50100 to A50115	CPU Bus Unit Restart Bits	Bits A50100 through A50115 can be turned ON to reset CPU Bus Units number #0 through #15, respectively. The Restart Bits are turned OFF automatically when restarting is completed. The CPU Bus Unit Initializing Flags (A30200 to A30215) will turn ON when initialization of the Units begins and turn OFF when it is completed.	OFF to ON: Unit restarted. Automatically turned OFF by system after restart processing has been completed.

Appendix F

CPU Bus Unit Allocations in the CPU Unit

The CPU Bus Units, including Ethernet Units, are allocated words in the CPU Unit's CIO Area and DM Area according to the unit numbers. This appendix is provided for easy reference. For details, refer to *Section 4 System Setup and Memory Allocations*.

CIO Area Allocations

Each Unit is allocated 25 words in the CIO Area, as shown in the following table.

Unit No. (decimal)	Allocated words	Unit No. (decimal)	Allocated words
0 (0)	CIO 1500 to CIO 1524	8 (8)	CIO 1700 to CIO 1724
1 (1)	CIO 1525 to CIO 1549	9 (9)	CIO 1725 to CIO 1749
2 (2)	CIO 1550 to CIO 1574	A (10)	CIO 1750 to CIO 1774
3 (3)	CIO 1575 to CIO 1599	B (11)	CIO 1775 to CIO 1799
4 (4)	CIO 1600 to CIO 1624	C (12)	CIO 1800 to CIO 1824
5 (5)	CIO 1625 to CIO 1649	D (13)	CIO 1825 to CIO 1849
6 (6)	CIO 1650 to CIO 1674	E (14)	CIO 1850 to CIO 1874
7 (7)	CIO 1675 to CIO 1699	F (15)	CIO 1875 to CIO 1899

Area Configuration

Offset	Bit 15 … 8 7 … 0	Data direction	Related communications services
n	Unit Control Switch	CPU Unit to Ethernet Unit	Socket Services (Refer to *Section 6 Socket Services*.) Mail Function (Refer to *Section 8 Mail*.)
n+1	UDP Socket No. 1 Status		
n+2	UDP Socket No. 2 Status		
n+3	UDP Socket No. 3 Status		
n+4	UDP Socket No. 4 Status		
n+5	UDP Socket No. 5 Status		
n+6	UDP Socket No. 6 Status		
n+7	UDP Socket No. 7 Status		
n+8	UDP Socket No. 8 Status		
n+9	TCP Socket No. 1 Status	Ethernet Unit to CPU Unit	Socket Services (Refer to *Section 6 Socket Services*.)
n+10	TCP Socket No. 2 Status		
n+11	TCP Socket No. 3 Status		
n+12	TCP Socket No. 4 Status		
n+13	TCP Socket No. 5 Status		
n+14	TCP Socket No. 6 Status		
n+15	TCP Socket No. 7 Status		
n+16	TCP Socket No. 8 Status		
n+17	Service Status		FTP Service, etc.
n+18	Error Status		All error conditions
n+19	Socket Service Request Switches 2 / Socket Service Request Switches 1	CPU Unit to Ethernet Unit	Socket Services (Refer to *Section 6 Socket Services*.)
n+20	Socket Service Request Switches 4 / Socket Service Request Switches 3		
n+21	Socket Service Request Switches 6 / Socket Service Request Switches 5		
n+22	Socket Service Request Switches 8 / Socket Service Request Switches 7		
n+23	(Not used.)		
n+24+ n+25	(Not used.)		

Unit Control Switches (CPU Unit to Ethernet Unit)

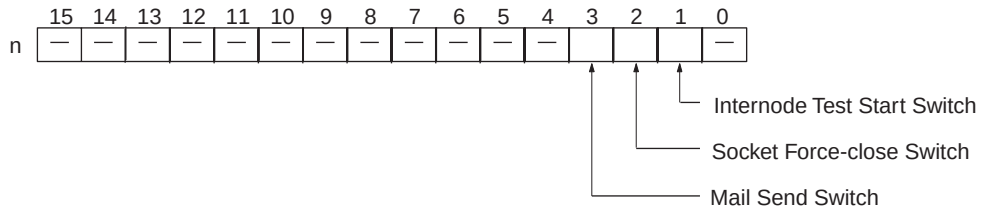

Status of UDP/TCP Sockets 1 to 8 (Ethernet Unit to CPU Unit)

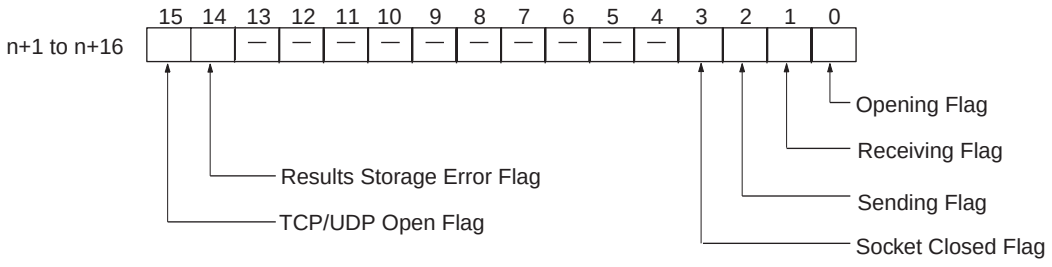

Service Status (Ethernet Unit to CPU Unit)

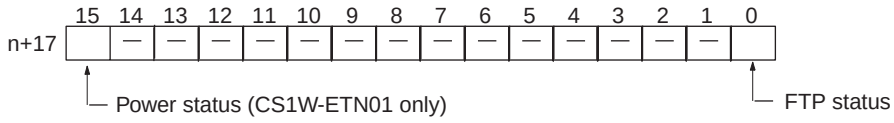

Error Status (Ethernet Unit to CPU Unit)

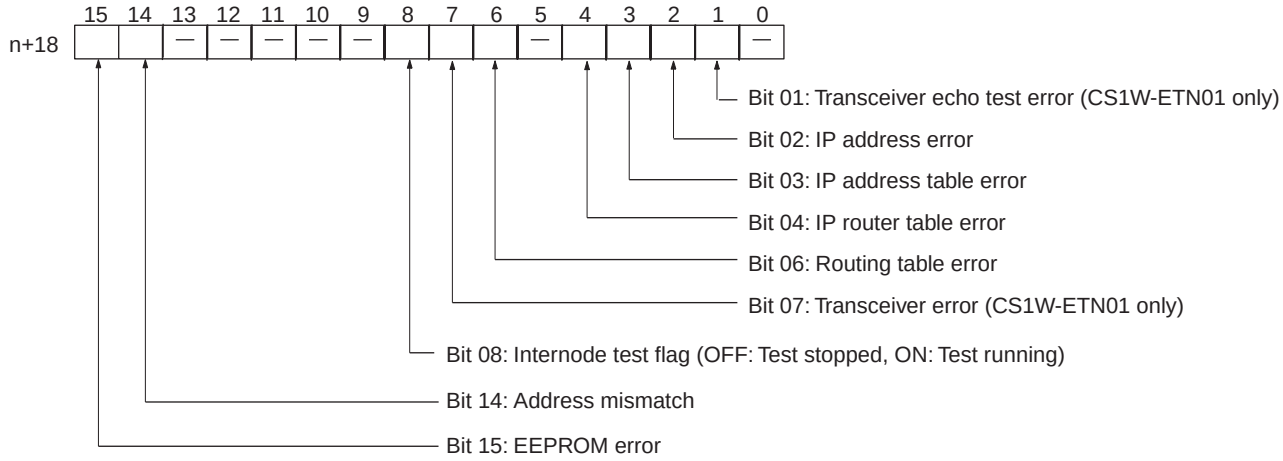

Note A transceiver is built into the CS1W-ETN11 and CJ1W-ETN11. If this bit turns ON, the Ethernet Unit has malfunctioned.

Socket Service Request Switches 1 to 8 (CPU Unit to Ethernet Unit)

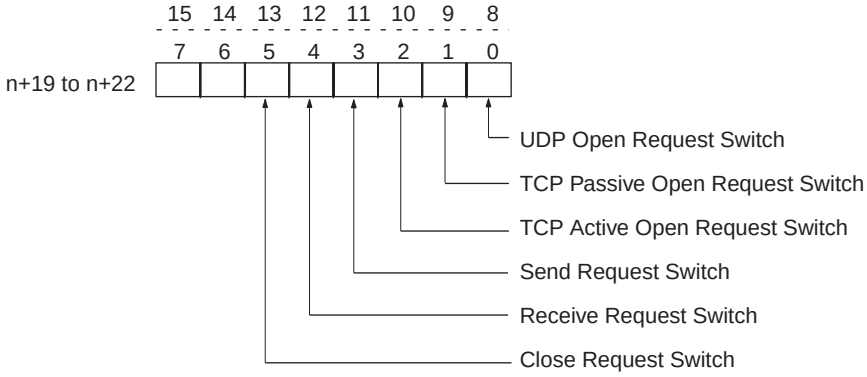

DM Area Allocations

Each Unit is allocated 100 words in the DM Area, as shown in the following table.

Unit No. (decimal)	Allocated words	Unit No. (decimal)	Allocated words
0 (0)	D30000 to D30099	8 (8)	D30800 to D30899
1 (1)	D30100 to D30199	9 (9)	D30900 to D30999
2 (2)	D30200 to D30299	A (10)	D31000 to D31099
3 (3)	D30300 to D30399	B (11)	D31100 to D31199
4 (4)	D30400 to D30499	C (12)	D31200 to D31299
5 (5)	D30500 to D30599	D (13)	D31300 to D31399
6 (6)	D30600 to D30699	E (14)	D31400 to D31499
7 (7)	D30700 to D30799	F (15)	D31500 to D31599

Area Configuration

Offset	Bit 15 … 8 7 … 0
m	Internode test remote network address and node number
m+1	Internode test number of send bytes
m+2	Internode test response monitoring time
m+3	Internode test status
m+4	Number of internode test runs
m+5	Number of internode test timeout errors
m+6	Number of internode test response errors
m+7	Number of internode test send errors
m+8	Number of times internode test data did not match
m+9	TCP socket No. 1 connection status
⋮	⋮
m+16	TCP socket No. 8 connection status
m+17	Mail status
m+18	Socket Services Parameter Area 1
m+28	Socket Services Parameter Area 2
⋮	⋮
m+88	Socket Services Parameter Area 8
m+98 m+99	IP Address Display/Setting Area

Internode Test Remote Network Address and Node Number (CPU Unit to Ethernet Unit)

	15 14 13 12 11 10 9 8	7 6 5 4 3 2 1 0
m	Remote network address	Remote node number
	(00 to 7F Hex)	(01 to 7F Hex)

Internode Test Number of Send Bytes (CPU Unit to Ethernet Unit)

	15 14 13 12 11 10 9 8 7 6 5 4 3 2 1 0
m+1	Number of send bytes (0000 to 07CC Hex)
	(1,996 bytes when set to 0000 Hex)

Internode Test Response Monitoring Time (CPU Unit to Ethernet Unit)

	15	14	13	12	11	10	9	8	7	6	5	4	3	2	1	0
m+2	Response monitoring time (0000 to FFFF Hex)															

(2 seconds when set to 2 seconds)

Internode Test Status (Ethernet Unit to CPU Unit)

	15	14	13	12	11	10	9	8	7	6	5	4	3	2	1	0
m+3				—	—	—	—	—	—	—						

Error code

Timeout

Response error

Send error

Data does not match

Routing table error

Send parameter error

Number of Internode Test Runs (Ethernet Unit to CPU Unit)

	15	14	13	12	11	10	9	8	7	6	5	4	3	2	1	0
m+4	Number of test runs (0000 to FFFF Hex)															

Number of Internode Test Timeout Errors (Ethernet Unit to CPU Unit)

	15	14	13	12	11	10	9	8	7	6	5	4	3	2	1	0
m+5	Number of timeout errors (0000 to FFFF)															

Number of Internode Test Response Errors (Ethernet Unit to CPU Unit)

	15	14	13	12	11	10	9	8	7	6	5	4	3	2	1	0
m+6	Number of response errors (0000 to FFFF)															

Number of Internode Test Transmission Errors (Ethernet Unit to CPU Unit)

	15	14	13	12	11	10	9	8	7	6	5	4	3	2	1	0
m+7	Number of transmission errors (0000 to FFFFHex)															

Number of Times Internode Test Data Did Not Match (Ethernet Unit to CPU Unit)

	15	14	13	12	11	10	9	8	7	6	5	4	3	2	1	0
m+8	Number of data disagreement errors (0000 to FFFF)															

TCP Socket No. (1 to 8) Connection Status (Ethernet Unit to CPU Unit)

	15	14	13	12	11	10	9	8	7	6	5	4	3	2	1	0
m+9 to m+16	—	—	—	—	—	—	—	—	—	—	—	—				

TCP connection status

Mail Status (Ethernet Unit to CPU Unit)

	15	14	13	12	11	10	9	8	7	6	5	4	3	2	1	0
m+17	—	—	—	—	—				—				—			

User mail status

Periodic mail status

Error log mail status

Socket Services Parameter Area 1 to 8 (Ethernet Unit to CPU Unit)

Offset	Socket No. 1	...	Socket No. 8	15 14 13 12 11 10 9 8 7 6 5 4 3 2 1 0
+0	m+18	...	m+88	UDP/TCP socket number (1 to 8)
+1	m+19		m+89	Local UDP/TCP port number (0000 to FFFF Hex)
+2	m+20		m+90	Remote IP address (00000000 to FFFFFFFF Hex)
	m+21		m+91	
+4	m+22	...	m+92	Remote UDP/TCP port number (0000 to FFFF Hex)
+5	m+23		m+93	Number of send/receive bytes (0000 to 07C0 Hex (1984))
+6	m+24 m+25		m+94 m+95	Send/receive data address (Same as FINS variable area designation method.)
+8	m+26		m+96	Timeout value (0000 to FFFF Hex)
+9	m+27	...	m+97	Response code

IP Address Display Area (CS Series)

	15 14 13 12	11 10 9 8	7 6 5 4	3 2 1 0
m+98	SW1	SW2	SW3	SW4
m+99	SW5	SW6	SW7	SW8

The set values of the Local IP Address Switches (rotary switches 1 to 8) on the back of the Ethernet Unit are read and stored here when the power is turned ON or the Ethernet Unit is restarted. If an incorrect address is set, 0000 (Hex) will be stored here and the ERC indicator will flash. (Refer to *Setting the Local IP Address*.)

IP Address Display/Setting Area (CJ Series)

	15 14 13 12	11 10 9 8	7 6 5 4	3 2 1 0
m+98	(1)	(2)	(3)	(4)
m+99	(5)	(6)	(7)	(8)

IP address: 12.34.56.78 (Hex)

If the local IP address in the CPU Bus Unit System Setup is set to a value other than 00.00.00.00, this area (words m+98 and m+99) will act as an IP Address Display Area and the local IP address set in the CPU Bus Unit System Setup will be read and stored here when the power is turned ON or the Unit restarted. If the local IP address in the CPU Bus Unit System Setup is set to 00.00.00.00 (the default setting), this value is read by the Ethernet Unit when the power is turned ON or the Unit restarted and is used as the local IP address.

Note Choose the method used to set the local IP address as follows:

Set the local IP address in the CPU Bus Unit System Setup when making other settings in the CPU Bus Unit System Setup (i.e., the default settings are not used). The settings are made with CX-Programmer.

Set the local IP address in the allocated words in the DM Area when using the CPU Bus Unit System Setup at its default settings (i.e., for simple operation). The setting is usually made with a Programming Console.

Application	Setting device	Setting area	Remarks
Simple operation (i.e., The CPU Unit Bus System Setup is used at its default settings. Only the IP address is set.)	Programming Console (CX-Programmer can also be used.)	Allocated words in the DM Area	The setting in the allocated words in the DM Area is enabled only when the IP address in the CPU Unit Bus System Setup is set to 00.00.00.00. If the IP address in the CPU Unit Bus System Setup is set to a value other than 00.00.00.00, this value is stored in the allocated words in the DM Area.
Operation with the CPU Unit Bus System Setup set as desired (i.e., The default settings are not used.)	CX-Programmer	CPU Unit Bus System Setup	The IP address set in the CPU Unit Bus System Setup is stored in the allocated words in the DM Area.

Note 1. If a value other than 00.00.00.00 is set as the local IP address in the CPU Bus Unit System Setup, even if an IP address is set in the allocated words in the DM Area, it will be overwritten with the setting in the CPU Bus Unit System Setup.

2. If no local IP address is set in either the CPU Bus Unit System Setup or the allocated words in the DM Area (m+98 and m+99), the Ethernet Unit will not be able to perform communications. Be sure to set the local IP address in one of these areas. It is not possible, however, to set the following IP addresses. If any of these values are set, the ERH indicator will flash.
   - IP addresses where all network number bits are 0.
   - IP addresses where all host number bits are 0.
   - IP addresses where all subnet number bits are 0.
   - IP addresses starting with 127 (7F Hex), e.g., 127.35.21.16.

Appendix G

ASCII Characters

Bits 1 to 4		Bits 5 to 7							
Binary		**0000**	**0001**	**0010**	**0011**	**0100**	**0101**	**0110**	**0111**
	Hex	**0**	**1**	**2**	**3**	**4**	**5**	**6**	**7**
0000	**0**	NUL	DLE	Space	0	@	P		p
0001	**1**	SOH	DC1	!	1	A	Q	a	q
0010	**2**	STX	DC2	”	2	B	R	b	r
0011	**3**	ETX	DC3	#	3	C	S	c	s
0100	**4**	EOT	DC4	$	4	D	T	d	t
0101	**5**	ENQ	NAK	%	5	E	U	e	u
0110	**6**	ACK	SYN	&	6	F	V	f	v
0111	**7**	BEL	ETB	’	7	G	W	g	w
1000	**8**	BS	CAN	(	8	H	X	h	x
1001	**9**	HT	EM	)	9	I	Y	i	y
1010	**A**	LF	SUB	*	:	J	Z	j	z
1011	**B**	VT	ESC	+	;	K	[	k	{
1100	**C**	FF	FS	,	<	L	\	l	|
1101	**D**	CR	GS	-	=	M	]	m	}
1110	**E**	SO	RS	.	>	N	^	n	~
1111	**F**	SI	US	/	?	O	_	o	DEL

Appendix H
Dimensions

CS1W-ETN01

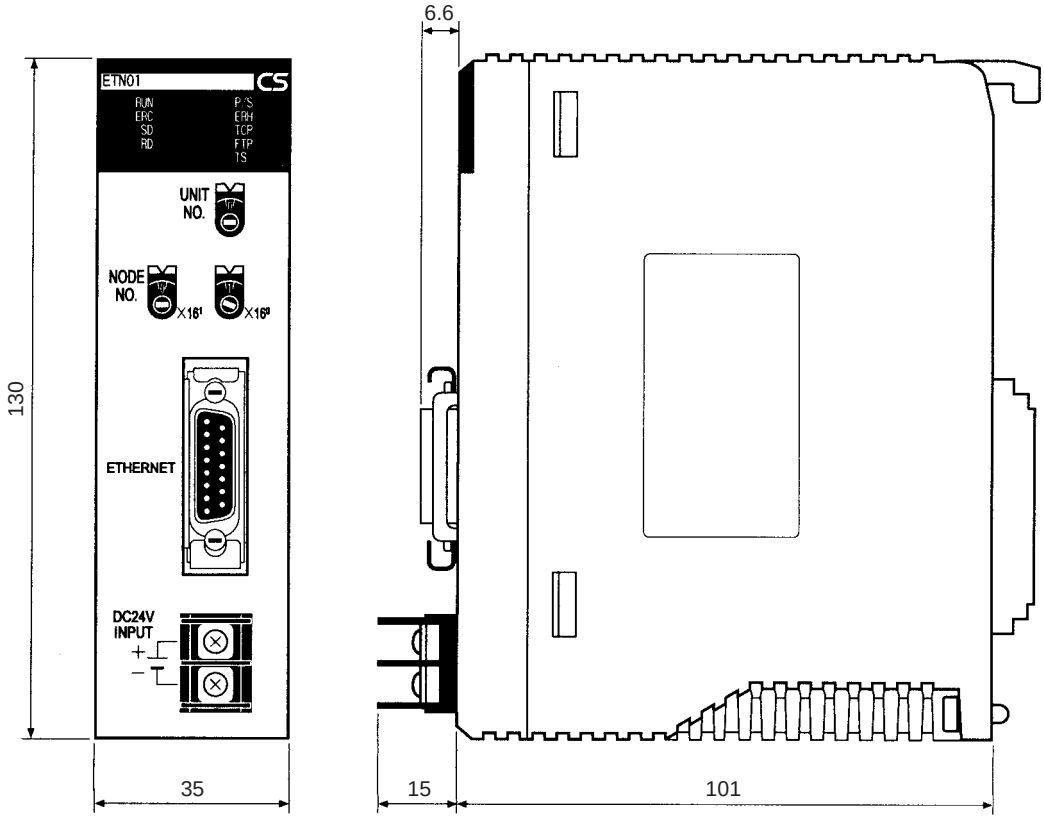

16.5 with cover attached

Unit: mm

CS1W-ETN11

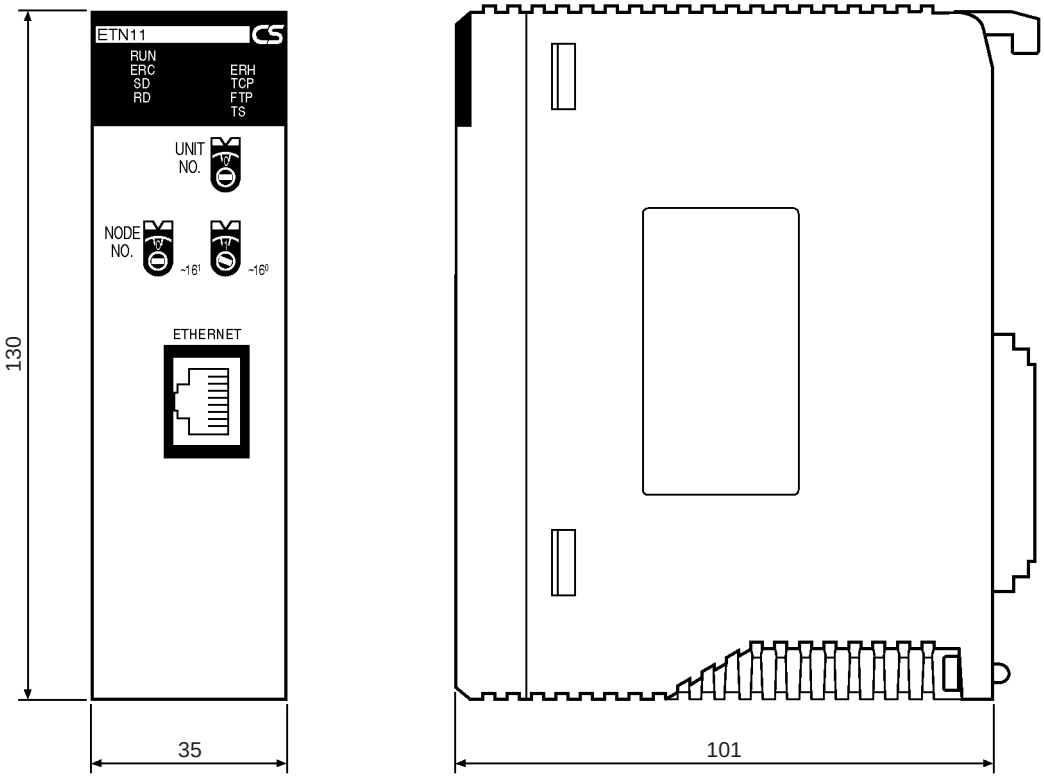

Unit: mm

CJ1W-ETN11

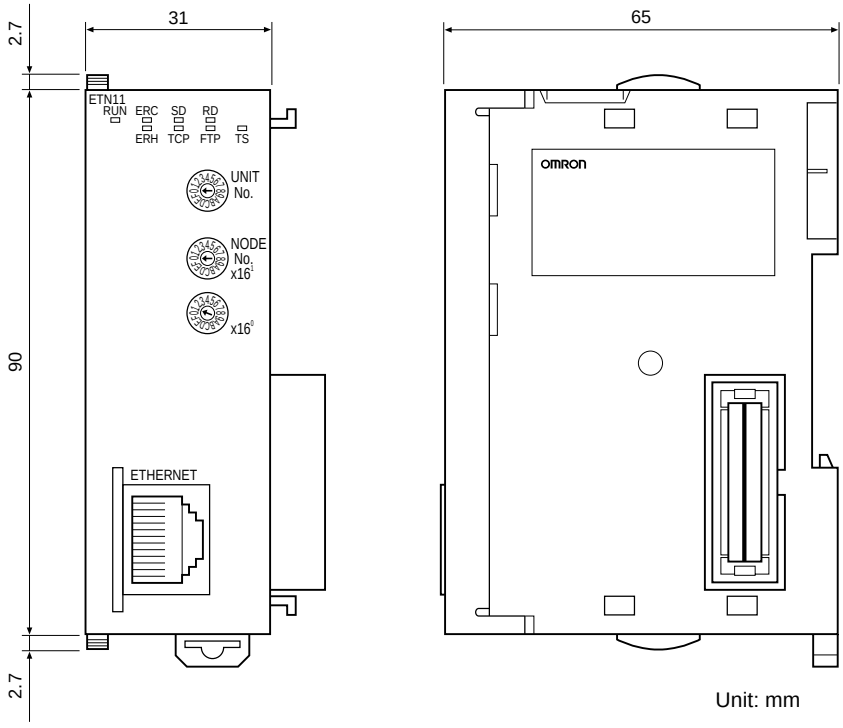
31
65
2.7
90
2.7
ETN11
RUN
ERC
ERH
SD
TCP
RD
FTP
TS
UNIT
No.
NODE
No.
x16¹
x16⁰
ETHERNET
OMRON
Unit: mm

Appendix I
Maintenance

The Ethernet Unit makes up part of a network. Repair a defective Ethernet Unit as soon as possible as it can have a negative effect on the entire network. We recommend that customers keep one or more spare Ethernet Units to allow immediate recovery of the network.

Replacing an Ethernet Unit

Observe the following precautions when replacing the Ethernet Unit.

- Always turn OFF the power supply before replacing the Ethernet Unit.
- Check that the spare Ethernet Unit is operating normally before replacing a defective Unit with it.
- When returning a defective Unit for repairs, provide as much written information as possible on the symptoms of the problem.
- If a problem occurs with poor contacts, wipe the contacts with a clean cloth soaked with industrial alcohol. Carefully remove any lint remaining on the contacts before replacing the Unit.

Settings after Replacing an Ethernet Unit

After replacing an Ethernet Unit, set the following to the same settings as were used on the previous Unit.

- Unit number
- Node number
- IP address
- Local IP address (CJ-series Ethernet Units)

Settings After Replacing a CPU

The EEPROM in the PC's CPU holds the information listed below. This information must be stored in any new CPU used to replace a defective one.

- Routing tables
- System Setup for the Ethernet Unit

Appendix J
Inspections

Carry out regular inspections to ensure the Ethernet Unit is functioning perfectly.

Items

Most of the parts that make up an Ethernet Unit are semiconductor components. None of the parts in the Unit will wear out after a specific lifetime, but some parts may deteriorate due to extreme operating condition. Therefore, it is important to inspect the Unit regularly.

Inspection Interval

Normally inspect once or twice per year. Choose the inspection period according to the severity of the operating conditions. New installation should be inspected more frequently until they are judged to be stable.

Inspection Items

Correct any of the items in the table below not conforming to the specified standard.

Item	Details	Standard
Environment	Temperature around Unit	0 to 55°C
	Humidity around Unit	10% to 90% (with no condensation)
	Accumulated dust	No accumulated dust
Mounting	Ethernet Unit firmly attached	No looseness
	Transceiver cable connector fully pushed in	No looseness
	Condition of transceiver cable	No visible abnormality
	Twisted-pair cable connector fully pushed in	No looseness
	Condition of twisted-pair cable	No visible abnormality

Tools Required for Inspection

The following tools are needed to inspect the Ethernet Unit:

Standard Tools

- Flat-blade and Phillips screwdrivers
- Tester or digital voltmeter
- Industrial alcohol and a clean cloth

Tools Required Under Special Circumstances

- Synchroscope
- Pen oscilloscope
- Thermometer and hygrometer

Index

Numbers

10BASE-T
  conversion adapters, 5
  twisted-pair cables, 5
24-VDC power supply, 4
  connecting, 42
  recommended products, 251

A

Address Resolution Protocol
  See also ARP communications
addresses
  remote addresses, 96
ARP communications, 10
ASCII characters, 277

B

bits
  addresses, 216, 267
  error status, 71
  power status, 70
  Socket Service Request Switches, 122
  Unit control switches, 68
BROADCAST DATA SEND, 221
broadcast test
  command, 221
  reading results, 221
BROADCAST TEST RESULTS READ, 221
buffers, 245, 261
  configuration, 263
bye, 171

C

cables
  10BASE-T twisted-pair cables, 5
  attaching transceivers, 252
  coaxial, 5, 40
  connections, 40
  installing outdoors, 251
  transceiver, 4
cd, 170
CIO Area, 58
  allocations, 67, 269
close, 171
CMND(490) instruction, 20, 81
  requesting socket services, 104, 139
coaxial cables, 5
  installation precautions, 251
  Terminators, 5
commands
  FINS commands, 214
  FTP commands, 168
communications
  FINS, 16
  FTP server, 16, 21
  mail, 16, 21
    setting, 64
  See also ARP communications
  See also Ethernet communications
  See also FINS communications
  See also ICMP communications
  See also IP communications
  See also SMTP communications
  See also TCP communications
  See also UDP communications
  selecting, 18
  socket services, 16, 19
  testing, 186
connections
  troubleshooting, 203
connectors
  pin layout, 39
Contact Output Units
  installation, 258
  interference with Ethernet, 258
  precautions, 258
CONTROLLER DATA READ, 218
CONTROLLER STATUS READ, 219
CPU Bus Units
  flags, 267
  Restart Bits, 268
  System Setup, 51, 59
current consumption, 7, 8
CX-Net, 45
CX-Programmer, 6, 45
  creating routing tables, 48
  settings, 60
  System Setup, 51

D

DA1, 98
DA2, 99
data areas
  FINS communications, 216
delete, 171
dimensions, 7, 8, 279
dir, 169
DM Area, 58
  allocations, 73, 272
DNA, 98

E

EC Directives, xxi
echoback test, 186
EM File Memory, 163
EMC Directives, xxi
EMI countermeasures, 259
ERC indicator, 32
  troubleshooting, 192
ERH indicator, 32
  troubleshooting, 192
ERROR LOG CLEAR, 223
ERROR LOG READ, 221
errors
  alignment, 220
  controller status, 219
  CRC, 220
  error codes, 195
  error log, 194
    clearing, 223
    reading, 221
  error messages, 172
  error status, 194
  flags
    FINS communications, 219
  hardware error, 32
  PC error, 32
  response codes, 207
  short packets, 220
  status, 71
  unit numbers, 268
  UNIX error messages, 210
Ethernet communications, 10
  addresses
    reading from Unit, 218
  IEEE802.3 standards, 14, 39
  ISO 8802-3 standards, 39
  parameters, 261
Ethernet Systems, 4, 5
  optical, 256
  optical fiber components, 256
Ethernet Units, 4, 5
  dimensions, 279
  functions, 17
  mounting, 37, 38
  reading status, 245
  replacing, 283
  resetting, 217
  socket ports, 17
  standards, 14
  System Setup, 51

F

Factory Interface Network Service
  See also FINS communications
File Transfer Protocol
  See also FTP server
FINS communications, 11, 16, 18
  address conversion, 60
  command frames, 97
  commands, 81, 217
    format, 215
    list, 102
  commands from hosts, 96
  commands from PCs, 83
  echo test, 186
  functions, 80
  headers, 98
  memory areas, 216
  port numbers, 83
  remote addresses, 96
  response codes, 207, 214
  response frames, 97
  response monitor time, 83
  responses, 217
  retries, 83
  setting UDP port number, 61
  socket numbers, 215
  socket services, 215
  specifications, 83
  testing, 236
  troubleshooting, 198
flags
  Closing Flag, 69
  Communications Port Enabled Flags, 267
  Communications Port Error Flags, 267
  CPU Bus Unit Error Flag, 267
  CPU Bus Unit Error Unit Number Flags, 268
  CPU Bus Unit Initializing Flags, 267
  CPU Bus Unit Number Duplication Flags, 268
  CPU Bus Unit Setting Error Flag, 267
  CPU Bus Unit Setting Error Unit Number Flags, 268
  Error Flags, 219
  FTP Status Flag, 70
  Internode Test Flag, 71
  Opening Flag, 69
  Receiving Flag, 69
  Results Storage Error Flag, 69
  Sending Flag, 69
  TCP/UDP Open Flag, 69
FTP indicator, 32, 173
FTP server, 11, 16, 17, 21
  application examples, 167
    using UNIX, 174
  closing, 171
  commands, 168

bye, 171
cd, 170
close, 171
delete, 171
dir, 169
get, 170
ls, 169
mdelete, 171
mget, 170
mput, 171
open, 169
put, 171
pwd, 170
quitting, 171
type, 170
user, 169
connecting, 162, 169
data type, 170
displaying current directory, 170
file system, 162
indicator, 32
login name, 62
setting, 163
password, 63
setting, 163
quitting, 171
See also Memory Cards
status, 173
troubleshooting, 202

G-H

GCT, 98
get, 170
grounding
noise reduction, 255
precautions, 251, 252
transceivers, 252
hardware errors
indicator, 32
host numbers, 12, 13
humidity, 7, 8

I

I/O allocations, 58
CIO Area, 58, 67, 269
DM Area, 58, 73, 272
System Setup, 58
I/O table
creating, 45
ICF, 98
ICMP communications, 10
status, 241
IEEE802.3 standards, 14
indicators, 32
troubleshooting, 192
inductive voltages, 252
inspections, 285
installation
cables
connections, 40
connector specifications, 39
Contact Output Units, 258
Ethernet network, 39
noise reduction, 254
outdoors, 257
precautions, 14, 251
transceivers, 253
instructions
sending FINS commands, 81
Internet Control Message Protocol
See also ICMP communications
Internet Protocol,*See also* IP communications
InterNIC Registration Services, 13
INTERNODE ECHO TEST, 220
internode test, 186, 187
checking results, 189
command, 220
comparison with PING, 53
executing, 187
setting parameters, 188
settings, 73
starting, 189
stopping, 189
IP ADDRESS TABLE READ, 239
IP communications, 10, 162
IP address tables, 52, 61
IP addresses, 12
allocations, 12
classes, 12
configuration, 12
converting to node numbers, 63
display area, 76
host numbers, 12, 13
network numbers, 12
reading from Units, 218
reading tables, 239
remote devices, 116
setting, 13, 34
subnet masks, 13, 24
subnet numbers, 13
IP router tables, 52
reading, 240
setting, 63
precautions, 80
programming example, 130, 134, 146, 153
status, 241
IP ROUTER TABLE READ, 240

L-M

lightning
  optical Ethernet Systems, 257
Low Voltage Directives, xxi
ls, 169
mail, 17, 21
  application example, 182
  contents, 179
  error mail, 180
  functions, 178
  periodic mail, 180
  sending, 180, 182
  settings, 64
  status, 76, 181
  triggers, 180
  troubleshooting, 205
  user mail, 180
main response code, 214
  See also MRES
maintenance, 283
mdelete, 171
memory areas
  *See also*data areas
Memory Cards, 162
  deleting files, 171
  displaying directories, 169
  See also FTP server
  transferring files from host, 171
  transferring files to host, 170, 171
MEMORY STATUS READ, 245
mget, 170
mode settings
  reading from Unit, 218
mounting
  Racks, 37, 38
mput, 171
MRES, 215

N

networks
  network memory, 245, 264
  network numbers, 12
  size, 12
  troubleshooting, 203
node numbers
  converting to IP addresses, 63
  error indicator, 32
  setting, 34, 36
noise
  Contact Output Units, 258
  reduction, 254, 256

O-P

open, 169
optical Ethernet Systems, 256
P/S indicator, 32
PC errors
  indicator, 32
PING, 53, 186, 236
  comparison with internode test, 53
  echo test, 186
port numbers
  sockets, 105
  TCP port, 116
    remote device, 117
  UDP port, 116
    reading from Unit, 218
    remote device, 117
power supply, 7
precautions
  applications, xix
  Contact Output Units, 258
  EC Directives, xxi
  environmental, 252
  general, xviii, 14
  grounding, 251, 252
  IEEE802.3 standards, 14, 39
  inductive voltages, 252
  inspections, 285
  installation, 14, 37, 38, 251
    coaxial cables, 251
  IP communications, 80
  ISO 8802-3 standards, 39
  operating environment, xix
  replacing Units, 283
  safety, xviii, 39
  Socket Service Request Switches, 112
  socket services, 111
  TCP communications, 108
  Terminators, 252
  transceiver cables, 252
  transceivers, 252
  UDP communications, 80, 109
  wiring, 40, 41
Programming Console, 45
Programming Devices, 6
  connecting, 45
  CX-Net, 45
  CX-Programmer, 45, 51
  Programming Console, 45
programs
  examples, 99
PROTOCOL STATUS READ, 241
protocols
  Address Resolution Protocol, 10

Ethernet, 10
Factory Interface Network Service, 11
File Transfer Protocol, 11
Internet Control Message Protocol, 10
Internet Protocol, 10
reading status, 241
Simple Mail Transfer Protocol, 11
Transmission Control Protocol, 10
User Datagram Protocol, 10
put, 171
pwd, 170

R

Racks
mounting Ethernet Units, 37, 38
RD indicator, 32
RECV(098) instruction, 81
relay tables, 47
RESET, 217
response codes, 117, 207
FINS commands, 214
UNIX error messages, 210
results storage area, 215
routing tables
creating, 46
setting examples, 48
RSV, 98
RUN indicator, 32
troubleshooting, 192

S

SA1, 99
SA2, 99
SD indicator, 32
SEND(090) instruction, 81
transmission delay, 94
service status, 70
settings
switches, 33
System Setup, 60
shock resistance, 7, 8
SID, 99
Simple Mail Transfer Protocol
See also SMTP communications
SMTP communications, 11
server address, 66
SNA, 99
socket services, 16, 17, 19
applications, 141
FINS communications, 215
functions, 104
Parameter Areas, 76
parameters, 126
precautions, 111
Socket Service Parameter Area, 112
Socket Service Request Switches, 72, 104, 122
precautions, 112
Socket Status Area, 127
TCP communications, 105
parameters, 115
TCP sockets
status, 125, 140
timing charts, 128, 144
transmission delays, 110
troubleshooting, 210
UDP communications, 105
parameters, 115
UDP sockets
status, 125, 140
using CMND(490), 104
using CMND(490) instruction, 139
SOCKET STATUS READ, 247, 265
sockets, 105
closing
TCP, 235
UDP, 227
numbers, 215
opening, 107
TCP, 228, 231
UDP, 223
port numbers, 17, 105
reading status, 247
receiving data
TCP, 232
UDP, 224
sending data
TCP, 234
UDP, 225
status, 69
TCP sockets
number, 115
status, 75, 265
troubleshooting, 201
testing communications, 236
timing charts, 144
UDP socket
number, 115
UDP sockets, 96
troubleshooting, 199
software configuration, 10
specifications, 7
Ethernet connectors, 39
SRES, 215
status
reading memory status, 245
reading protocol status, 241

reading socket status, 247
subnet masks, 13
address conversion, 24
reading from Unit, 218
setting, 62
subnet numbers, 13
sub-response code, 214
See also SRES
switches
settings, 33
Socket Service Request Switches, 72, 122
unit control, 68
SYSMAC BUS/2, 83
SYSMAC LINK, 83
system configuration, 3
Ethernet Systems, 4, 5
System Setup, 6, 51
CPU Bus Units, 58, 59

T

TCP CLOSE REQUEST, 235
TCP communications, 10, 162
comparison with UDP, 106
data fragmentation, 108
precautions, 108
programming example, 130, 146
socket services
parameters, 115
sockets, 107
status, 265
troubleshooting, 201
status, 243
TCP indicator, 32
TCP OPEN REQUEST (ACTIVE), 231
TCP OPEN REQUEST (PASSIVE), 228
TCP RECEIVE REQUEST, 232
TCP SEND REQUEST, 234
temperature, 7, 8
Terminators, 5
precautions, 252
timers, 261
timing
socket communications, 144
socket services, 144
transceivers, 4
cables, 4
precautions, 252
recommended products, 251
grounding, 252
installation
examples, 253
precautions, 252
multipoint transceivers, 256
recommended products, 251
Transmission Control Protocol
See also TCP communications
transmission delays
reading PC memory, 101
socket services, 110
troubleshooting
FINS communications, 198
FTP server, 202
mail, 205
network connections, 203
procedures, 197
socket services, 210
startup, 197
TCP sockets, 201
UDP sockets, 199
UNIX error messages, 210
using indicators, 192
TS indicator, 33
type, 170

U

UDP CLOSE REQUEST, 227
UDP communications, 10
comparison with TCP, 106
data fragmentation, 108
precautions, 80, 109
programming example, 134, 153
socket services
parameters, 115
sockets
troubleshooting, 199
UDP OPEN REQUEST, 223
UDP RECEIVE REQUEST, 224
UDP SEND REQUEST, 225
unit numbers
error indicator, 32
setting, 33, 35
user, 169
User Datagram Protocol
See also UDP communications
user name
specifying, 169

V-W

vibration resistance, 7, 8
weight, 7, 8
wiring
cables, 40, 41
precautions, 40, 41, 251
word addresses, 216, 267

Revision History

A manual revision code appears as a suffix to the catalog number on the front cover of the manual.

Cat. No. W343-E1-07

Revision code

The following table outlines the changes made to the manual during each revision. Page numbers refer to the previous version.

Revision code	Date	Revised content
1	February 1999	Original production
2	November 2000	CS1W-ETN11 (10Base-T) Ethernet Unit added. **Pages xi, 2 to 7, 10, 22 to 24, 27 to 31, 53 to 55, 171, 181, 194, 195, 223, 227, 229, 230, 241, 247, and 251:** Information on CS1W-ETN11 added. **Page 2:** Parenthetic information added under *FINS Message Communications*. **Page 6:** Data given in “G” units removed from table. **Page 21:** Minor changes made to first note. **Page 22:** Minor changes in wording made to points 8 and 9. **Page 27:** Note at bottom of page removed. **Page 32:** Information about Programming Devices added. **Page 35:** Information on CX-Programmer and CX-Net made. **Pages 38, 39, 50, 51, 52, 64, 141, and 151:** Minor changes made to wording of information on CX-Programmer. **Page 40:** Information on startup tests added. **Pages 76, 77, and 78:** Minor changes made to mathematical notation. **Page 83:** References added in 2 places. **Page 92:** Minor changes and additions made in several places. **Page 104:** Wording of last 2 paragraphs changed. **Page 160:** Information on mail send functions added.
3	May 2001	Information related to the CJ1W-ETN11 added throughout the manual. In addition, the following changes were made. **Page 22:** Information on address conversion methods added. **Page 33:** Text and graphic added to information on twisted-pair cable. Title added to bottom graphic. **Page 43:** Reference added. **Page 44:** Minor change made to text at bottom of page. **Pages 48, 56, 249, 177:** Changes made to graphics. **Page 52:** Correction made to text. **Pages 102, 104, 146, 147, 149, 177:** Changes made to tables. **Page 157:** Change made to text in graphic. **Page 172:** Information on internode test added. **Page 192:** Minor change made to information on environment error. **Page 217:** Minor change made to information on destination IP address. **Page 218:** Minor change made to information on FINS node number and IP address. **Page 252:** Minor change made to wording of last paragraph. **Page 253:** Subscript characters changed to standard characters in 4 places.

Revision code	Date	Revised content
04	February 2003	**Page xi:** Changes made in several places. **Page 71:** Changes made to the description of Unit operation for bit 7 in the table. **Page 89:** Minor changes made to ladder diagram. **Page 93:** Minor changes made to table next to ladder diagram. **Pages 100, 101:** Changes made to sample program in several places. **Page 106:** Changes made to the end of the second paragraph under “UDP Communications.” **Page 117:** Minor change made to paragraph under “Time Out Time.” **Pages 134, 138, 152, 158:** Notes added under programming examples. **Page 152:** Numerical changes made in several places. **Page 215:** Note added under fourth paragraph. **Pages 220, 237, 238, 245:** Changes made to diagrams showing response block format. **Page 235:** Changes made to diagram showing command block format. **Page 261:** Lines removed in four places.
05	June 2003	Revisions were made, as follows: **Page 194:** Error status for bit 07 changed for CJ1W-ETN11 and corresponding note removed. **Page 247:** Added number of bytes for each part of the socket status.
06	July 2005	**Page v:** Information on general precautions notation added. **Page xiii:** Information on liability and warranty added. **Page xvii:** EN50081-2 changed to EN61000-6-4 in table.
07	January 2008	**Page 5:** Removed the RH509E from the bottom table. **Pages 71, 194, 219, 220, and 271:** Changed "address disagreement" to "address mismatch." **Page 258:** Changed one straight cable to a cross cable in the top diagram.

OMRON Corporation

Industrial Automation Company
Control Devices Division H.Q.
PLC Division
Shiokoji Horikawa, Shimogyo-ku,
Kyoto, 600-8530 Japan
Tel: (81) 75-344-7084/Fax: (81) 75-344-7149

Regional Headquarters

OMRON EUROPE B.V.
Wegalaan 67-69, NL-2132 JD Hoofddorp
The Netherlands
Tel: (31)2356-81-300/Fax: (31)2356-81-388

OMRON ELECTRONICS LLC
One Commerce Drive Schaumburg,
IL 60173-5302 U.S.A.
Tel: (1) 847-843-7900/Fax: (1) 847-843-7787

OMRON ASIA PACIFIC PTE. LTD.
No. 438A Alexandra Road # 05-05/08 (Lobby 2),
Alexandra Technopark, Singapore 119967
Tel: (65) 6835-3011/Fax: (65) 6835-2711

OMRON (CHINA) CO., LTD.
Room 2211, Bank of China Tower,
200 Yin Cheng Zhong Road,
Pu Dong New Area, Shanghai, 200120, China
Tel: (86) 21-5037-2222/Fax: (86) 21-5037-2200

OMRON

Authorized Distributor:

Cat. No. W343-E1-07

Note: Specifications subject to change without notice

Printed in Japan