Cat. No. W367-E1-02

生産終了
DISCONTINUED

SYSMAC
CS1W-SLK11/21

SYSMAC LINK Units

OPERATION MANUAL

OMRON

CS1W-SLK11/21
SYSMAC LINK Units

Operation Manual

Revised June 2004

Notice:

OMRON products are manufactured for use according to proper procedures by a qualified operator and only for the purposes described in this manual.

The following conventions are used to indicate and classify precautions in this manual. Always heed the information provided with them. Failure to heed precautions can result in injury to people or damage to property.

⚠ DANGER Indicates an imminently hazardous situation which, if not avoided, will result in death or serious injury.

⚠ WARNING Indicates a potentially hazardous situation which, if not avoided, could result in death or serious injury.

⚠ Caution Indicates a potentially hazardous situation which, if not avoided, may result in minor or moderate injury, or property damage.

OMRON Product References

All OMRON products are capitalized in this manual. The word “Unit” is also capitalized when it refers to an OMRON product, regardless of whether or not it appears in the proper name of the product.

The abbreviation “Ch,” which appears in some displays and on some OMRON products, often means “word” and is abbreviated “Wd” in documentation in this sense.

The abbreviation “PLC” means Programmable Controller. “PC” is used, however, in some Programming Device displays to mean Programmable Controller.

Visual Aids

The following headings appear in the left column of the manual to help you locate different types of information.

Note Indicates information of particular interest for efficient and convenient operation of the product.

1,2,3... 1. Indicates lists of one sort or another, such as procedures, checklists, etc.

© OMRON, 1999

All rights reserved. No part of this publication may be reproduced, stored in a retrieval system, or transmitted, in any form, or by any means, mechanical, electronic, photocopying, recording, or otherwise, without the prior written permission of OMRON.

No patent liability is assumed with respect to the use of the information contained herein. Moreover, because OMRON is constantly striving to improve its high-quality products, the information contained in this manual is subject to change without notice. Every precaution has been taken in the preparation of this manual. Nevertheless, OMRON assumes no responsibility for errors or omissions. Neither is any liability assumed for damages resulting from the use of the information contained in this publication.

TABLE OF CONTENTS

PRECAUTIONS xiii

1 Intended Audience xiv
2 General Precautions xiv
3 Safety Precautions xiv
4 Operating Environment Precautions xv
5 Application Precautions xv
6 Conformance to EC Directives xvii

SECTION 1
Introduction 1

1-1 Overview 2
1-2 SYSMAC LINK Unit Features 3
1-3 SYSMAC LINK Unit Functions 6
1-4 Programming Devices and Support Software 8
1-5 Data Link Procedures 10
1-6 Message Service Procedure 14

SECTION 2
Unit Components and Switch Settings 15

2-1 Nomenclature 16
2-2 Switch Settings 18
2-3 Mounting to Backplanes 18
2-4 Cable Connections 19

SECTION 3
Basic Communications 33

3-1 SYSMAC LINK System Communications 34
3-2 Unit Number 35
3-3 Setting Node Address 35
3-4 Network Address Setting 36
3-5 Network Parameters 36
3-6 Memory Areas 38

SECTION 4
Data Links 41

4-1 Introduction 42
4-2 Data Link Specifications 43
4-3 Data Link Indicators 44
4-4 Data Link Settings 44
4-5 Creating Data Links 46
4-6 Data Link Area Allocations 49
4-7 Data Link Table Example 53

TABLE OF CONTENTS

4-8 Controlling Data Links 55
4-9 Data Link Status 56
4-10 Data Link Precautions 60
4-11 Data Link Characteristics 62
4-12 CX-Programmer Procedures 67

SECTION 5
Network Data Exchange. 83
5-1 What is Network Interconnection? 84
5-2 Routing Tables 86
5-3 Routing Table Examples 87

SECTION 6
Message Service. 91
6-1 About Data Read/Write Services 92
6-2 PLC Network Instructions 92
6-3 FINS Command/Response Format 108
6-4 FINS Commands for SYSMAC LINK Units 112

SECTION 7
Remote Monitoring and Programming 123
7-1 Remote Programming and Monitoring 124

SECTION 8
Troubleshooting 127
8-1 Troubleshooting 128
8-2 Error Log 137
8-3 Polling Node Backup 143
8-4 Node Bypass 143

SECTION 9
Unit Replacement 145
9-1 Replacing the Unit 146
9-2 Replacement Procedure 147
9-3 Using the C200H-SLK21 or C1000H-SLK21 148

SECTION 10
Inspection and Maintenance 149
10-1 Periodic Inspections 150
10-2 Handling Precautions 150
10-3 Tools and Equipment Needed for Inspection 150

TABLE OF CONTENTS

Appendices

A Standard Models 151
B Dimensions 153
C Related Auxiliary Area Information 155
D CPU Bus Unit Area Allocations 157
E DM Area Allocations 161

Glossary 163

Index 179

Revision History 181

About this Manual:

This manual describes the installation and operation of CS-series SYSMAC LINK Units and includes the sections described below.

Please read this manual completely and be sure you understand the information provide before attempting to install and operate a SYSMAC LINK System including CS-series SYSMAC LINK Units.

Section 1 Introduction introduces the features and operations of the SYSMAC LINK Units.

Section 2 Unit Components and Switch Settings describes the names and functions of the SYSMAC LINK Unit components and switch settings.

Section 3 Basic Communications describes the token bus method of communications used in SYSMAC LINK Systems, as well as the basic settings necessary for operation.

Section 4 Data Links describes the operation of data links, procedures required to establish data links, and methods of monitoring data link operations.

Section 5 Network Data Exchange provides the details of the data exchange functions of the CS-series PLCs via SYSMAC LINK Networks.

Section 6 Message Service describes the PLC ladder network instructions and FINS commands that can be used to transfer data and control operation via a SYSMAC LINK System.

Section 7 Remote Monitoring and Programming provides information on remote programming and monitoring.

Section 8 Troubleshooting provides information to help identify and correct errors that might occur.

Section 9 Unit Replacement describes the replacement procedure and provides cautions for Unit replacement.

Section 10 Inspection and Maintenance contains information describing periodic inspections required by the System.

Appendices contain information describing SYSMAC LINK Unit models, their dimensions, and area allocations.

⚠ **WARNING** Failure to read and understand the information provided in this manual may result in personal injury or death, damage to the product, or product failure. Please read each section in its entirety and be sure you understand the information provided in the section and related sections before attempting any of the procedures or operations given.

PRECAUTIONS

This section provides general precautions for using the CS-series SYSMAC LINK Units and related devices.

The information contained in this section is important for the safe and reliable application of the CS-series SYSMAC LINK Units. You must read this section and understand the information contained before attempting to set up or operate a SYSMAC LINK System.

1 Intended Audience xiv
2 General Precautions xiv
3 Safety Precautions xiv
4 Operating Environment Precautions. xv
5 Application Precautions xv
6 Conformance to EC Directives. xvii
6-1 Applicable Directives. xvii
6-2 Concepts. xvii
6-3 Conformance to EC Directives xvii

1 Intended Audience

This manual is intended for the following personnel, who must also have knowledge of electrical systems (an electrical engineer or the equivalent).

- Personnel in charge of installing FA systems.
- Personnel in charge of designing FA systems.
- Personnel in charge of managing FA systems and facilities.

2 General Precautions

The user must operate the product according to the performance specifications described in the operation manuals.

Before using the product under conditions which are not described in the manual or applying the product to nuclear control systems, railroad systems, aviation systems, vehicles, combustion systems, medical equipment, amusement machines, safety equipment, and other systems, machines, and equipment that may have a serious influence on lives and property if used improperly, consult your OMRON representative.

Make sure that the ratings and performance characteristics of the product are sufficient for the systems, machines, and equipment, and be sure to provide the systems, machines, and equipment with double safety mechanisms.

This manual provides information for programming and operating the Unit. Be sure to read this manual before attempting to use the Unit and keep this manual close at hand for reference during operation.

⚠ **WARNING** It is extremely important that a PLC and all PLC Units be used for the specified purpose and under the specified conditions, especially in applications that can directly or indirectly affect human life. You must consult with your OMRON representative before applying a PLC System to the above-mentioned applications.

3 Safety Precautions

⚠ **WARNING** Do not attempt to take any Unit apart while the power is being supplied. Doing so may result in electric shock.

⚠ **WARNING** Do not touch any of the terminals or terminal blocks while the power is being supplied. Doing so may result in electric shock.

⚠ **WARNING** Do not attempt to disassemble, repair, or modify any Units. Any attempt to do so may result in malfunction, fire, or electric shock.

⚠ **WARNING** Provide safety measures in external circuits (i.e., not in the Programmable Controller), including the following items, in order to ensure safety in the system if an abnormality occurs due to malfunction of the PLC or another external factor affecting the PLC operation. Not doing so may result in serious accidents.

- Emergency stop circuits, interlock circuits, limit circuits, and similar safety measures must be provided in external control circuits.
- The PLC will turn OFF all outputs when its self-diagnosis function detects any error or when a severe failure alarm (FALS) instruction is executed. As a countermeasure for such errors, external safety measures must be provided to ensure safety in the system.

- The PLC outputs may remain ON or OFF due to deposition or burning of the output relays or destruction of the output transistors. As a countermeasure for such problems, external safety measures must be provided to ensure safety in the system.
- When the 24-VDC output (service power supply to the PLC) is overloaded or short-circuited, the voltage may drop and result in the outputs being turned OFF. As a countermeasure for such problems, external safety measures must be provided to ensure safety in the system.

⚠ **Caution** Confirm safety at the destination node before transferring a program to another node or changing the I/O memory area. Doing either of these without confirming safety may result in injury.

4 Operating Environment Precautions

⚠ **Caution** Do not operate the control system in the following places:

- Locations subject to direct sunlight.
- Locations subject to temperatures or humidity outside the range specified in the specifications.
- Locations subject to condensation as the result of severe changes in temperature.
- Locations subject to corrosive or flammable gases.
- Locations subject to dust (especially iron dust) or salts.
- Locations subject to exposure to water, oil, or chemicals.
- Locations subject to shock or vibration.

⚠ **Caution** Take appropriate and sufficient countermeasures when installing systems in the following locations:

- Locations subject to static electricity or other forms of noise.
- Locations subject to strong electromagnetic fields.
- Locations subject to possible exposure to radioactivity.
- Locations close to power supplies.

5 Application Precautions

Observe the following precautions when using the SYSMAC LINK Unit.

⚠ **WARNING** Failure to abide by the following precautions could lead to serious or possibly fatal injury. Always heed these precautions.

- Always ground the system to 100 Ω or less when installing the system to protect against electrical shock.
- Always turn OFF the power supply or the backup power supply to the PLC or the computer before attempting any of the following. Performing any of the following with the power supply turned ON may lead to electrical shock:
  - Installing or removing the SYSMAC LINK Unit.
  - Mounting or dismounting Power Supply Units, I/O Units, CPU Units, Inner Boards, or any other Units.
  - Assembling the Units.
  - Setting DIP or rotary switches.

- Connecting or disconnecting any cables or wiring.
- Connecting or disconnecting any connectors.

⚠ **Caution** Failure to abide by the following precautions could lead to faulty operation or the PLC or the system or could damage the PLC or PLC Units. Always heed these precautions.

- Always use the power supply voltages specified in the operation manuals. An incorrect voltage may result in malfunction or burning.
- Take appropriate measures to ensure that the specified power with the rated voltage and frequency is supplied. Be particularly careful in places where the power supply is unstable. An incorrect power supply may result in malfunction.
- Install external breakers and take other safety measures against short-circuiting in external wiring. Insufficient safety measures against short-circuiting may result in burning.
- Disconnect the functional ground terminal when performing withstand voltage tests. Not disconnecting the functional ground terminal may result in burning.
- Do not attempt to disassemble, repair, or modify any Units. Any attempt to do so may result in malfunction, fire, or electric shock.
- Be sure that all the mounting screws, terminal screws, and cable connector screws are tightened to the torque specified in the relevant manuals. Incorrect tightening torque may result in malfunction.
- Leave the label attached to the Unit when wiring. Removing the label may result in malfunction if foreign matter enters the Unit.
- Remove the label after the completion of wiring to ensure proper heat dissipation. Leaving the label attached may result in malfunction.
- Use crimp terminals for wiring. Do not connect bare stranded wires directly to terminals. Connection of bare stranded wires may result in burning.
- Double-check all wiring and switch settings before turning ON the power supply. Incorrect wiring may result in burning.
- Wire all connections correctly.
- Mount Units only after checking terminal blocks and connectors completely.
- Be sure that the communications cable connectors and other items with locking devices are properly locked into place. Improper locking may result in malfunction.
- Use special packing box when transporting the SYSMAC LINK Unit. Handle the product carefully so that no excessive vibration or impact is applied to the product during transportation.
- Check the user program for proper execution before actually running it on the Unit. Not checking the program may result in an unexpected operation.
- Observe the following precautions when wiring the communications cable or backup power supply cables.
  - Separate the cables from the power lines or high-tension lines.
  - Do not bend the cables beyond their natural bending radius.
  - Do not pull on the cables.

- Do not place heavy objects on top of the cables.
- Route cables inside conduits.

- Before touching the Unit, be sure to first touch a grounded metallic object in order to discharge any static build-up.

6 Conformance to EC Directives

6-1 Applicable Directives

- EMC Directives

6-2 Concepts

EMC Directives

OMRON devices that comply with EC Directives conform to the related EMC standards so that they can be more easily built into other devices or machines. The actual products have been checked for conformity to EMC standards (see the following note). Whether the products conform to the standards in the system used by the customer, however, must be checked by the customer.

EMC-related performance of the OMRON devices that comply with EC Directives will vary depending on the configuration, wiring, and other conditions of the equipment or control panel in which the OMRON devices are installed. The customer must, therefore, perform final checks to confirm that devices and the overall machine conform to EMC standards.

Note Applicable EMC (Electromagnetic Compatibility) standards are as follows:

EMS (Electromagnetic Susceptibility): EN50082-2
EMI (Electromagnetic Interference): EN61000-6-2

6-3 Conformance to EC Directives

The CS1W-SLK11 and CS1W-SLK21 SYSMAC LINK Units comply with EC Directives. To ensure that the machine or device in which these SYSMAC LINK Units are used complies with EC directives, the SYSMAC LINK Units must be installed as follows:

1,2,3...

1. In order to conform with EC Directives, the SYSMAC LINK Units must be installed within a control panel. Use an SA20-712 (made by NITTO ELECTRIC WORKS) or a similar model.
2. Reinforced insulation or double insulation must be used for the DC power supplies used for the communications and I/O power supplies.
3. SYSMAC LINK Units complying with EC Directives also conform to the Common Emission Standard (EN50081-2). When a SYSMAC LINK Unit is built into a machine, however, noise can be generated by switching devices using relay outputs and cause the overall machine to fail to meet the Standards, particularly with radiated emission for 10-m regulations. The customer must, therefore, take measures to ensure and perform final checks to confirm that devices and the overall machine conform to EMC standards.

SECTION 1
Introduction

This section introduces the features and operations of the SYSMAC LINK Units.

1-1 Overview 2
1-2 SYSMAC LINK Unit Features. 3
1-2-1 Standard Models 4
1-2-2 Specifications 4
1-3 SYSMAC LINK Unit Functions 6
1-3-1 Basic Settings 6
1-3-2 Data Links 7
1-3-3 Network Data Exchange 7
1-3-4 Message Service 8
1-3-5 Remote Programming and Monitoring 8
1-3-6 RAS Functions 8
1-4 Programming Devices and Support Software 8
1-4-1 Basic Programming 9
1-4-2 CX-Programmer 9
1-5 Data Link Procedures 10
1-5-1 Manually Setting Data Links 10
1-5-2 Automatically Setting Data Links 12
1-6 Message Service Procedure 14

1-1 Overview

The SYSMAC LINK is an FA network that can send and receive large data packets flexibly and easily among the OMRON CS-series, C200HX/HG/HE, CVM1, CV-series, C1000H, C1000HF, C2000H, and CQM1H-series Programmable Controllers (PLCs), as well as IBM PC/AT or compatible computers.

The SYSMAC LINK supports data links that enable data sharing and a message service that enables sending and receiving data when required. Data link words can be freely set to create a flexible data link system and effectively use memory areas.

The network is connected using coaxial cable or optical fiber cable.

Coaxial System (Coaxial Cable)

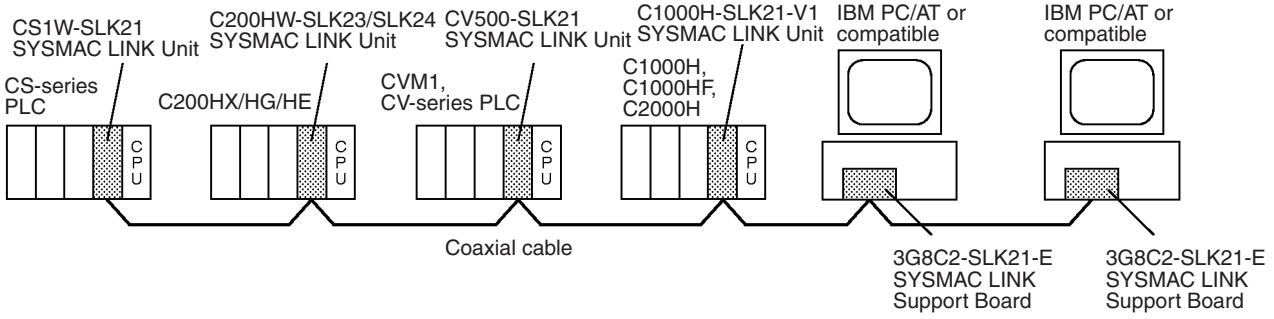

Optical System (Optical Fiber Cable)

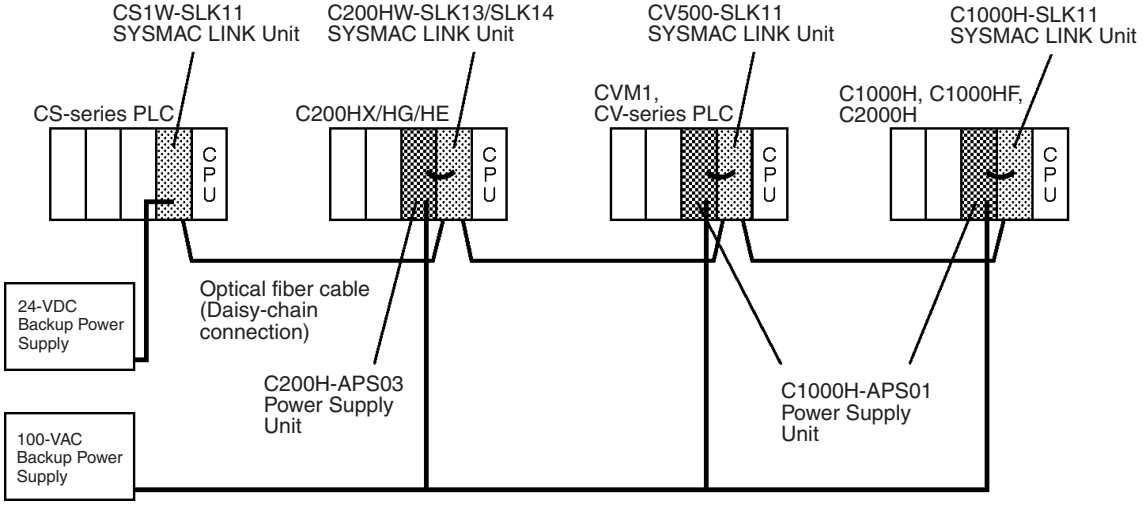

Internetwork Connections

Communications across bridges or gateways can include up to three networks, including the local network. A CS-series, CVM1, or CV-series PLC can be used as the bridge or gateway to easily and economically create networks controlling multiple lines.

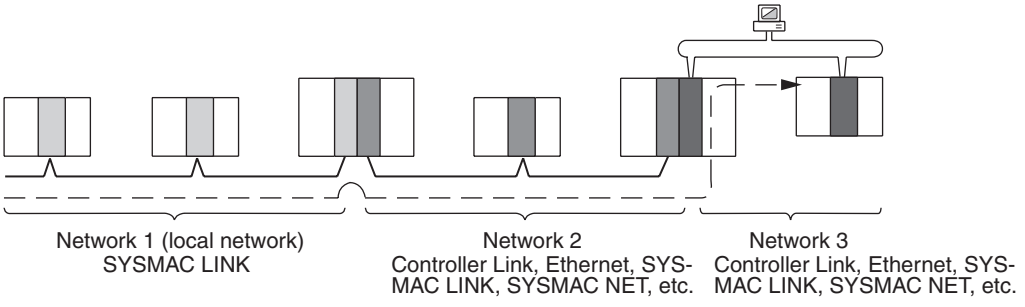

1-2 SYSMAC LINK Unit Features

CS-series SYSMAC LINK Units are equipped with a variety of special features including some developed from those incorporated by the C-series SYSMAC LINK Unit. These features allow PLCs in a SYSMAC LINK Network to communicate with or automatically exchange data with other PLCs in the same Network and to communicate with interconnected Networks.

High Speed, Reliability, and Flexibility

The specialized communications LSIs used in all SYSMAC LINK Units deliver high speed, reliability, and flexibility in an advanced data link system, while optical fiber cable systems provide high-speed communications with unparalleled immunity to noise.

In the event of an error or failure in the polling node, another node automatically takes over management of the SYSMAC LINK System without stopping the entire network. The CX-Net within the CX-Programmer can monitor and/or program PLCs anywhere in the network via the SYSMAC LINK System.

Distributed Control with Data Links

The data link function transfers data to and from other nodes automatically, establishing simple but powerful peer-to-peer links between nodes. Data links can be generated automatically or the user can use the flexibility of manually generating data links to eliminate unused link words, improve data link I/O response time, and to even create several data link groups in one network.

The data link communications cycle time can be fixed at a constant value, so even simultaneous remote programming/monitoring and NETWORK READ/WRITE instructions (RECV(98)/SEND(90)) execution have no effect on the data link I/O response time.

The data link function allows data exchange not only between PLCs but also between PLCs and host computers in the network, making it possible to develop communications software with ease.

Active Communications

Communications can also be programmed using ladder-diagram instructions (SEND(90), RECV(98), and CMND(490)) to facilitate communications with other PLCs and host computers on an as-needed basis. Use of these instructions enables the following:

1,2,3...

1. Broadcast transmissions
2. Response monitoring time setting (response time-out setting)
3. Transmit retry setting
4. Enabling/disabling responses

Internetwork Communications

Routing tables can be set up in network PLCs so that communications are possible with interconnecting networks or networks one network away from the local network. This includes both bridging to other SYSMAC LINK Networks or passing gateways to other OMRON networks, including those in SYSMAC NET Link Systems or SYSMAC BUS/2 Remote I/O Systems.

Remote Access

The CX-Net within the CX-Programmer can access PLCs on the local network, on adjacent networks, or on networks one removed from the local network, including Controller Link and Ethernet Networks. Access can be used to monitor operation and/or manipulate data and programs.

RAS Functions

SYSMAC LINK Units are equipped with three RAS functions (RAS is an acronym for reliability, availability, and serviceability). The Polling Node Backup and Failed Node Bypass (optical systems only) functions prevent the network from failing when one Unit fails. The Internode Echo Test function aids in communications troubleshooting.

Remote monitoring of the network's operating status and error logs also aids in troubleshooting and quick correction of communications problems.

1-2-1 Standard Models

SYSMAC LINK Units

Applicable PLCs	Unit classification	Name	Transmission path	Communications	Model
CS-series PLCs (CS1-H, CS1)	CPU Bus Unit	Coaxial SYSMAC LINK Unit	Coaxial cable	Data links (manually set or automatically set), messages (through SEND(90), RECV(98), and CMND(490) instructions)	CS1W-SLK21
		Optical SYSMAC LINK Unit	Optical fiber cable		CS1W-SLK11

SYSMAC LINK Programming Devices

Product	Specifications	Model
CX-Net (within CX-Programmer)	Setting manually set data links, starting/stopping data links, reading network status, reading error logs, setting routing tables, testing networks, changing network parameters settings **Note** The CS-series SYSMAC LINK Unit cannot be directly connected to SYSMAC Support Software.	WS02-CX□□E

1-2-2 Specifications

General Specifications

Conform to the specifications of the CS Series.

SYSMAC LINK Unit Specifications

Item		Specifications	
Model		CS1W-SLK21	CS1W-SLK11
Type		Coaxial	Optical fiber
Unit classification		CS-series CPU Bus Unit	
Applicable PLCs		CS-series PLCs	
Max. number of Units		4 Units max. (total Coaxial Units and Optical Units)	
Mounting position		Four slots on the CPU Racks and CS-series Expansion Racks	
Allowable unit number settings		0 to F	
CPU Unit data exchange areas	CPU Bus Unit Area	25 words/Unit SYSMAC Link Unit to CPU Unit: Data link status, network participation status, error information, etc.	
	Words allocated to CPU Bus Units in DM Area	100 words/Unit (Only first word of the 100 words is used.) CPU Unit to SYSMAC LINK Unit: Polling/polled node setting, starting data links, data link mode (automatic/manual) settings, number of data link words for automatic data links, etc.	
Settings		Rotary switch: Unit number Rotary switches: Node addresses	
Indicators		LEDs: 9 on Optical Unit, 8 on Coaxial Unit Coaxial and Optical Units: Running, communications error, CPU Unit error, network participation, polling, send, receive, data link active Optical Unit Only: Power ON	
Front panel connectors		BNC connector	Two optical fiber connectors Power supply terminal block (24 V DC)
Effect on CPU Unit cycle time		0.2 ms Requires an additional 1.5 ms + (No. of words transferred x 0.001 ms) when data links are used. Requires additional event processing time when servicing messages.	
Current consumption (supplied from Power Supply Unit)		480 mA at 5 V DC	470 mA at 5 V DC
Dimensions		35 × 130 × 101 mm (W x H x D)	

Item	Specifications	
Weight	302 g (including F adapter)	332 g (including cable bracket)
Standard accessories	F Adapter, insulating cover	Cable bracket

SYSMAC LINK Communications Specifications

Item	Specifications	
Type	Coaxial	Optical fiber
Communications functions	Data links, messages	
Communications method	Token bus (N:N)	
Transmission method	Manchester encoding	
Modulation	Baseband	
Synchronization	Flag synchronization (HDLC frames)	
Transmission path	Bus	Daisy chain
Baud rate and maximum transmission distance	2 Mbps (fixed) Maximum transmission distance: 1 km	2 Mbps (fixed) Maximum transmission distance: 10 km Maximum distance between nodes: Crimp cut: 800 m, adhesive polishing: 1 km (The maximum distance between nodes is determined by the connector cable processing method.)
Transmission path	Coaxial cable (5C-2V)	2-carrier hard-plastic-clad quartz optical fiber cable
Node connection	BNC connector	Special full-lock connector (a half-lock connector can also be used)
Number of nodes	62 max.	
Number of data link words	Send words per node: 508 words max. (254 words in CIO Area + 254 words in DM Area) Data link words (send and receive) that can be created in a single SYSMAC LINK Unit: 2,966 words max. (CIO Area + DM Area)	
Data link words	Automatic settings: CIO 1000 to CIO 1063 (Data Link Area), D00000 to D00127 (DM Area) Manual settings: CIO 0000 to CIO 6143 (entire CIO), entire DM Area (D00000 to D32767) When creating manually set data link tables using CX-Programmer Ver. 1.2 or earlier, the words that can be set by the user are limited to the same words as for CVM1/CV, as follows: CIO Area: CIO 0000 to CIO 2555 DM Area: D00000 to D24575	
Message length	552 bytes max. (including header)	
RAS functions	Automatic polling node backup, self-diagnostics (startup hardware check), internode testing, broadcast test (using FINS command), watchdog timer, error log	Automatic polling node backup, self-diagnostics (startup hardware check), internode testing, broadcast test (using FINS command), watchdog timer, error log, failed node bypass
Error control	Manchester encoding check, error (CRC-CCITT) detection = $X^{16} + X^{12} + X^{5} + 1$	

Data Link Specifications

Type of data link		Automatic settings		Manual settings
Number of data link nodes		62 nodes max. (2 nodes min.)		
Number of words per node (sending and receiving)		2,966 words max. (CIO Area + DM Area total)		
Areas supporting data links	**CIO Area**	Data Link Area: CIO 1000 to CIO 1063	Select from the following: CIO Area only, DM Area only, CIO + DM Areas	CIO Area (CIO 0000 to CIO 6143)
	DM Area	D00000 to D00127		DM Area (D00000 to D32767)
Starting data link word	**CIO Area**	CIO 1000		Manual settings can be made between CIO 0000 to CIO 6143
	DM Area	D00000		Manual settings can be made between D00000 to D32767
Number of words sent per node	**CIO Area**	Either 4, 8, 16, or 32 words (same for each node)		0 to 254 words (separate for each node)
	DM Area	Either 8, 16, 32, or 64 words (same for each node)		
Allocating data link words	**CIO Area**	Each node has the same number of data link words and words are allocated to nodes in the order of node addresses.		The number of data link words and the order of allocation can be set for each node. The same order of allocation must be used for both the CIO Area and the DM Area.
	DM Area			

Message Communications Specifications

Instructions		SEND(90)/RECV(98)	CMND(490)
Application		Data sending and receiving	Reading and writing data at other nodes (e.g., reading/writing file memory), controlling operation (e.g., controller operating modes), reading error logs, etc.
Message contents		Commands for sending and receiving data	Any supported FINS commands
Local node to partner node	**PLC to PLC**	Possible	Possible
	PLC to computer	Possible (requires program that returns responses from the computer)	Possible (requires program that returns responses from the computer)
	Computer to PLC	Possible (requires program that receives responses at the computer)	Possible (requires program that receives responses at the computer)
Local node: partner node		SEND(90): 1:1 or 1:N (broadcast) RECV(98): 1:1	1:1 or 1:N (broadcast)
Number of words sent and received		256 words max. (512 bytes)	542 bytes max.

1-3 SYSMAC LINK Unit Functions

This section explains the settings and functions for the SYSMAC LINK Unit. For details, refer to the relevant sections.

1-3-1 Basic Settings

Perform the basic settings to use the SYSMAC LINK Unit.

Node Address
(See pages 18 and 35)

Set the address of the local node in the network using the rotary switches on the front of the SYSMAC LINK Unit.

Unit Number
(See pages 18 and 35)

Up to 16 CPU Bus Units (SYSMAC LINK Units, Controller Link Units, Ethernet Units, Serial Communication Units, etc.) can be mounted on one PLC. Of these, however, only a maximum of four Units may be SYSMAC LINK Units.

Set the unit number of each Unit manually from between 0 to F Hex (0 to 15) using the rotary switches on the front of the SYSMAC LINK Unit.

Network Parameters
(See page 36)

The following parameters are set with the Support Software (CX-Net within the CX-Programmer).

- Communications cycle time
- Maximum node address
- Number of polled nodes
- Maximum number of frames

1-3-2 Data Links

SYSMAC LINK Units can be used to create data links between PLCs and computers on the same network. The data links support the following functions: Automatic settings (communications using data link words with settings made automatically from settings made in PLC memory), and manual settings (communications using data link tables with settings made using the CX-Net within the CX-Programmer).

Automatic Settings
(See page 49)

The areas to be used in creating the data links (CIO Area and/or DM Area) and the number of data link words for each node are set in parameters in the DM Area.

Manual Settings
(See page 49)

- **Data Link Table Settings**

  The common link parameters and refresh parameters required by data links are set using Support Software.

  Common link parameters: The same for all nodes

  Refresh parameters: Unique to each node
- **Data Link Area Settings**

  The data areas (i.e., CIO Area and/or DM Area) to be used in the data links are specified in the common link parameters.
- **Number of Words in Data Links**

  The number of data link words for each node is specified in the common link parameters.
- **Data Link Node Settings**

  The nodes to be linked to the local node are specified in the refresh parameters. It is possible to use these settings to set multiple groups within a single network. The settings are made for each node individually.

1-3-3 Network Data Exchange

The SYSMAC LINK Unit can send and receive data by connecting to other networks of the same type or to different networks.

- Bridges: Commands can be used to send and receive between SYSMAC LINK Networks.
- Gateways: Commands can be used to send and receive between networks with different communications protocols, such as Controller Link and Ethernet.

Commands and data can be sent and received across a maximum of three networks (including the local network).

Routing Tables (See page 86)

Routing tables are set using the Support Software to specify paths for sending and receiving data between networks. The routing tables consist of the following two tables.

- Local Network Table: Set the combination of unit numbers and network addresses for each Communications Unit.
- Relay Network Table: Set the communications path between the sender and receiver.

1-3-4 Message Service

The SYSMAC LINK Units support SEND(90) and RECV(98) instructions for reading data from and writing data to other node PLCs. The SYSMAC LINK Units also support CMND(490) instructions for sending and receiving FINS commands that control PLCs and CPU Bus Units. Using these instructions, it is possible to control complicated functions without creating a communications program.

Refer to *SECTION 6 Message Service* for details.

1-3-5 Remote Programming and Monitoring

Remote programming and monitoring can be performed between SYSMAC LINK, Controller Link, and Ethernet Networks. A maximum of three levels of network communications (including the local network) are supported.

Refer to *SECTION 7 Remote Monitoring and Programming* for details.

1-3-6 RAS Functions

The SYSMAC LINK Unit supports RAS functions to help protect the network and recover from errors.

Internode Test

Communications between the local node and a specified node within the network can be tested. The test settings are made using the Support Software.

Broadcast Test

All the nodes within a specified network can be tested using the Support Software broadcast test function.

Error Log (See page 137)

If an error occurs in the Unit, the time of the error and the error contents are logged in EEPROM within the Unit. The logged error information can be read using the Support Software.

Polling Node Backup (See page 143)

If an error occurs in the polling node, the Unit at another node automatically becomes the polling node and rebuilds the network.

Node Bypass (See page 143)

If a backup power supply is used with an Optical SYSMAC LINK System, any node that goes down will be automatically bypassed, preventing the entire network from going down.

1-4 Programming Devices and Support Software

The CX-Programmer is needed to use a SYSMAC LINK Network.

1-4-1 Basic Programming

One of the following Programming Devices can be connected to the CPU Unit to automatically set data links or use the message service.

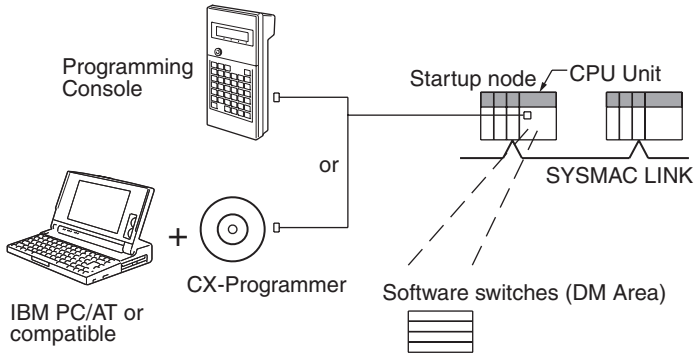

The following operations are possible.

- Selecting manual or automatic setting for data links.
- Setting the data links for automatic data link allocation (software switches).
- Starting/stopping data links (Start Bit: ON/OFF)
- Programming the message service.
- Reading (monitoring) network status.

1-4-2 CX-Programmer

The CX-Net operations within the CX-Programmer are required when using manually set data links, or when setting or monitoring detailed settings of the SYSMAC LINK Unit. This Support Software can be used with a CS-series PLC and is ideal for the following applications.

- Setting manual data links (i.e., creating and storing data link tables).
- Starting/stopping data links.
- Reading (monitoring) network status.
- Reading error logs.
- Setting routing tables.
- Testing the Network.
- Changing network parameters.

Using a Personal Computer as a Peripheral Device

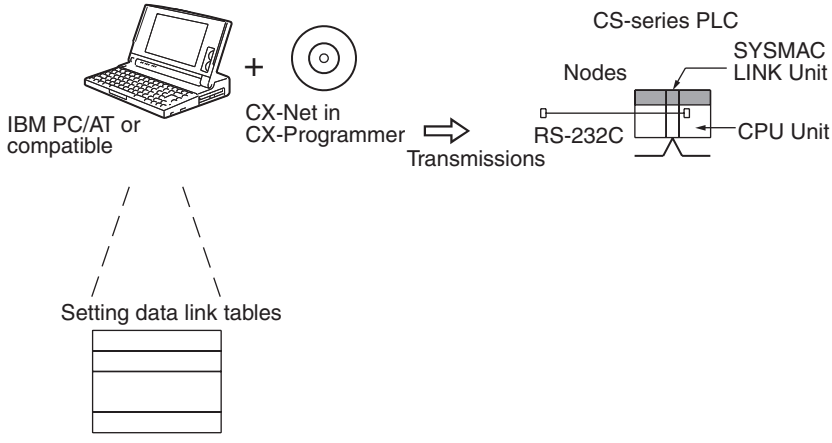

Using a Personal Computer as a Node

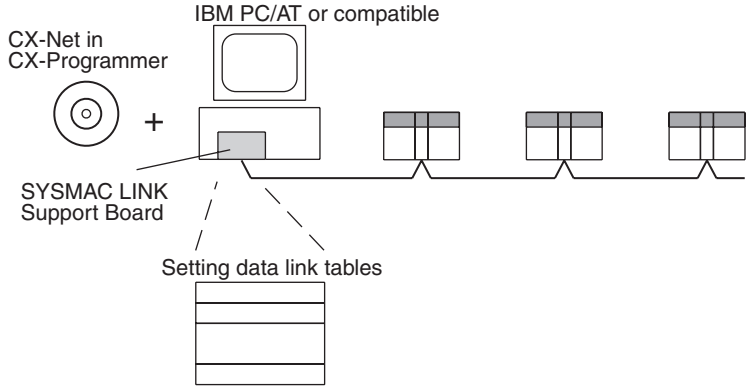

Software	External appearance	Model
CX-Programmer		WS02-CX□□E

Note

(1) The CS-series SYSMAC LINK Units cannot be directly connected to SYSMAC Support Software.

(2) For further details about the CX-Programmer, refer to the *CX-Programmer Operation Manual.*

(3) The CX-Net in the CX-Programmer cannot set data link tables for the C200H-SLK21 or C1000H-SLK21. Refer to *9-3 Using the C200H-SLK21 or C1000H-SLK21* for details.

1-5 Data Link Procedures

1-5-1 Manually Setting Data Links

When the data link mode is set for manual data link table creation, the data link tables can be input using the CX-Net within the CX-Programmer. Use the following procedure.

1,2,3...

1. Install and wire the Units.

Contents	Method	Nodes	Page
a. Mount the Units to the PLCs.	---	All nodes	18
b. Wire the Network.	---	All nodes	19
c. Connect terminating resistance	Use C100H-TER01 Terminator.	Coaxial systems only. End nodes on the network: Connect Terminator	

2. Prepare for communications.

Contents	Method	Nodes	Page
a. Set the unit number.	Use the front rotary switches.	CS-series, CVM1, and CV-series PLCs only	18
b. Set the node address.	Use the front rotary switches.	All nodes	

3. Turn ON the power to the PLC.

Contents	Method	Nodes	Page
Turn ON the power to the PLC.	---	All nodes	---

4. Connect the Programming Device.

Contents	Method	Nodes	Page
Connect the Programming Console or Support Software.	Use the special connection cable.	CS-series, CVM1, and CV-series PLCs	8

5. Create I/O tables.

Contents	Method	Nodes	Page
Input the I/O tables.	Use the SYSMAC Support Software or Programming Console.	CS-series, CVM1, and CV-series PLCs only	---

6. Set the data link mode.

Contents	Method	Nodes	Page
Set data link mode to manual.	Use the SYSMAC Support Software or Programming Console.	Data link startup node only The node that is used to start the data link is called the startup node. It is necessary to decide beforehand which node will be the startup node.	45

Note Be sure that the data link mode in the data link parameters in the DM Area is set to 00 when using manually set data links.

7. Register the data link tables by making the following settings for each node.

Contents		Method	Nodes	Page
First data link status word		Use the CX-Net within the CX-Programmer.	All nodes within the network Delete from the data link tables all nodes that are not in a data link.	46, 67
Data link nodes				
Area 1	First data link status words			
	Numbers of data link words			
Area 2	First data link status words			
	Numbers of data link words			

Note Offsets are used to control where data is placed within the receive area.

8. Start the data links.

Contents	Method	Nodes	Page
Start the data links.	Switch the Data link Start/Stop Bit (see below) from OFF to ON using either the Programming Device, the user program, the CX-Net within the CX-Programmer.	Data link startup node (The Start Bit can be turned ON in more then one node to make sure the data links start even when the startup node is down.)	55, 67

Note (a) Data link Start/Stop Bit (N= unit number):
CS Series: Word 0 of DM30000 + 100 × N

(b) The data links will not start if there is an error in the data link tables in the startup node.

9. Stop the data links.

Contents	Method	Nodes	Page
Stop the data links.	Switch the Data link Start/Stop Bit (listed below) from OFF to ON using either the Programming Device, the user program, the CX-Net within the CX-Programmer.	Any node that is active in the data link	55, 67

Note Data link Start/Stop Bit (N= unit number):
CS Series: Word 0 of DM30000 + 100 × N

1-5-2 Automatically Setting Data Links

Data link tables can be automatically created by setting the data link mode to automatic data link table creation. Use the following procedure.

1,2,3... 1. Install and wire the Units.

Contents	Method	Nodes	Page
a. Mount the Units to the PLCs.	---	All nodes	18
b. Wire the Network.	---	All nodes	19
c. Connect terminating resistance	Use C100H-TER01 Terminator.	Coaxial systems only. End nodes on the network: Connect Terminator	

2. Prepare for communications.

Contents	Method	Nodes	Page
a. Set the unit number.	Use the front rotary switches.	CS-series, CVM1, and CV-series PLCs only	18
b. Set the node address.	Use the front rotary switches.	All nodes	

3. Turn ON the power to the PLC.

Contents	Method	Nodes	Page
Turn ON the power to the PLC.	---	All nodes	---

4. Connect the Programming Device.

Contents	Method	Nodes	Page
Connect the Programming Console or Support Software.	Use the special connection cable.	CS-series, CVM1, and CV-series PLCs only	8

5. Create I/O tables.

Contents	Method	Nodes	Page
Create the I/O tables.	Use the SYSMAC Support Software or Programming Console.	CS-series, CVM1, and CV-series PLCs only	---

6. Set the parameters for automatic data link creation.

Contents	Method	Nodes	Page
a. Set the data link mode to automatic.	Use the SYSMAC Support Software or Programming Console.	Data link startup node only The node that is used to start the data link is called the startup node. It is necessary to decide beforehand which node will be the startup node.	45
b. Set the number of data link words.		Data link startup node only	

7. Start the data links.

Contents	Method	Nodes	Page
Start the data links.	Switch the Data link Start/Stop Bit (listed below) from OFF to ON using either the Programming Device, or the user program.	Data link startup node (The Start Bit can be turned ON in more then one node to make sure the data links start even when the startup node is down.)	55, 67

Note Data link Start/Stop Bit (N= unit number):
CS Series: Word 0 of DM30000 + 100 × N

8. Stop the data links.

Contents	Method	Nodes	Page
Stop the data links.	Switch the Data link Start/Stop Bit (listed below) from OFF to ON using either the Programming Device, or the user program.	Any node that is active in the data link	55, 67

Note (a) Data link Start/Stop Bit (N= unit number):
CS Series: Word 0 of DM30000 + 100 × N

(b) The data links will not start if there is an error in the data link tables in the startup node. Data links can be started and stopped using the CX-Net within the CX-Programmer.

1-6 Message Service Procedure

The following steps outline the basic procedure for using the message service.

1,2,3...

1. Install and wire the Units.

Contents	Remarks	Page
a. Mount the Units to the PLCs.	---	18
b. Wire the Network.	---	19
c. Connect terminating resistance	Coaxial systems only.	

2. Prepare for communications.

Contents	Remarks	Page
a. Set the unit number.	CS-series, CVM1, and CV-series PLCs only	18
b. Set the node address.	---	

3. Turn ON the power to the PLC.

Contents	Remarks	Page
Turn ON the power to the PLC.	---	---

4. Create the I/O tables.

Contents	Remarks	Page
Create the I/O tables.	CS-series, CVM1, and CV-series PLCs only	---

5. Register routing tables if using internetwork connections.

Contents	Remarks	Page
a. Set the local network table	---	86
b. Set the relay network table	---	

6. Create the user program.

Contents	Remarks	Page
a. Prepare the send and receive data in memory.	Stored in the memory areas of the source node	92
b. Prepare the control data for the communications instruction.		
c. Check the conditions for executing the SEND/RECV or CMND instruction.	The standard input conditions are the Active Node Flags for the source and destination nodes, and the Port Enabled Flag.	
d. Execute the SEND/RECV or CMND instruction.	---	
e. Execute other instructions are required for the results of the communications instruction, (e.g., retry or error processing if an error occurs).	The standard input condition is the Port Error Flags. CS-series PLCs have 8 communications ports. When 9 or more communications instructions are executed at the same time, exclusive control is necessary.	

SECTION 2
Unit Components and Switch Settings

The names and functions of the SYSMAC LINK Unit components and switch settings are described in this section.

2-1 Nomenclature 16
2-1-1 Component Names and Functions 16
2-1-2 Indicators 17
2-2 Switch Settings 18
2-3 Mounting to Backplanes 18
2-4 Cable Connections 19
2-4-1 Coaxial Units 19
2-4-2 Optical Units 25
2-4-3 Backup Power Supply 29

2-1 Nomenclature

This section describes the names and components of the SYSMAC LINK Unit.

2-1-1 Component Names and Functions

This section describes the names and functions of the SYSMAC LINK Unit components.

CS1W-SLK11 Optical SYSMAC LINK Units

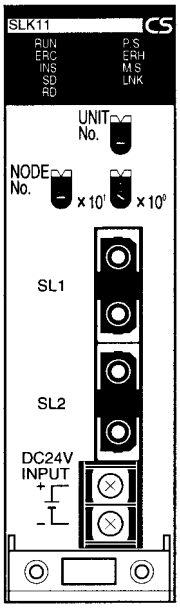

Indicators
LED indicators that display the Unit and network status.

Unit number switch
One rotary switch. The unit number is set in single-digit hexadecimal for the network to which the PLC is connected.

Node address switches
Two rotary switches. The node address of the Unit on the SYSMAC LINK Network is set in 2-digit decimal.

Optical connectors
Connectors to connect to the SYSMAC LINK Network communications cable (optical fiber cable).

Power Supply Terminal Block
Connect the backup battery for the node bypass function.

CS1W-SLK21 Coaxial SYSMAC LINK Units

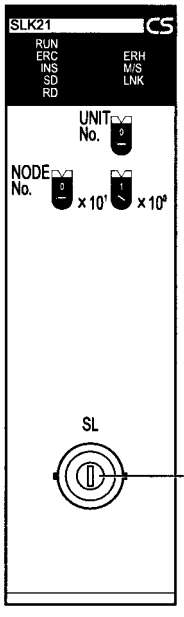

Indicators
LED indicators that display the Unit and network status.

Unit number switch
One rotary switch. The unit number is set in single-digit hexadecimal for the network to which the PLC is connected.

Node address switches
Two rotary switches. The node address of the Unit on the SYSMAC LINK Network is set in 2-digit decimal.

Coaxial connector
Connects to the SYSMAC LINK network communications coaxial cable.

2-1-2 Indicators

The status of the SYSMAC LINK Units is shown by the indicators listed below.

Optical SYSMAC LINK Unit (CS**1W**-SLK**11**)

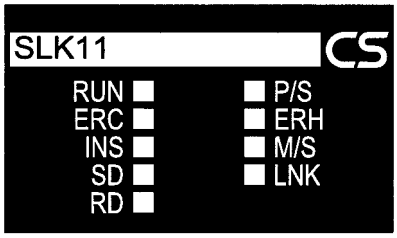

Coa**x**ial SYSMAC LINK Unit (CS**1W**-SLK**21**)

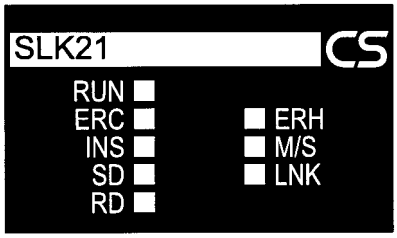

Indicator name	Color	Condition	Meaning
RUN	Green	Lit	Unit is operating normally.
		Not lit	Watchdog timer error has occurred.
P/S (power supply ON, CS1W-SLK11 only)	Green	Lit	Power is being supplied from the backup power supply.
		Not lit	Power is not being supplied from the backup power supply.
ERC (communications error)	Red	Lit	Communications error has occurred, node address setting is incorrect, or same node address has been set twice.
		Not lit	None of the above errors has occurred.
ERH (PLC error)	Red	Lit	No I/O table has been set or PLC CPU, PLC model, PLC version, PLC interface, EEPROM, unit number setting, or a unit number duplication error has occurred.
		Not lit	None of the above errors has occurred.
INS (Network inclusion)	Orange	Lit	Unit is part of Network.
		Not lit	Unit is not part of Network.
M/S (polling node)	Orange	Lit	Unit is polling node.
		Not lit	Unit is not part of Network or is polled node.
SD (send)	Orange	Lit	Unit is sending data.
		Not lit	Unit is not sending data.
RD (receive)	Orange	Lit	Unit is receiving data.
		Not lit	Unit is not receiving data
LNK (data link)	Orange	Lit	Unit is part of active data link.
		Flashing	Data link error has occurred.
		Rapid flashing	Data link table communications cycle time is too short.
		Not lit	Unit is not part of active data link.

Note If the Unit is participating in the network, the SD and RD indicators will light when sending and receiving the token.

2-2 Switch Settings

The SYSMAC LINK Unit provides rotary switches on the front panel with which to set the node address ("NODE NO.") and unit number. You must turn OFF the PLC before setting the rotary switches. If you have changed the settings when the PLC is not turned OFF, you must restart the SYSMAC LINK Unit or the PLC to use the new settings.

Switch Positions

The switches are positioned as shown in the following diagram.

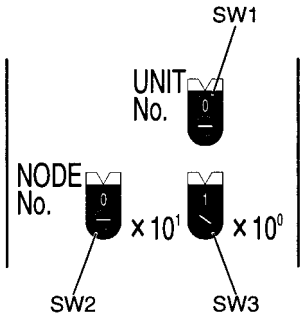

Set the unit number with SW1. Set the node address with SW2 and SW3. The setting ranges are given in the following table.

Settings Values

Switches	Range	Remarks	Page
Unit number (UNIT No.)	0 to F Hex	Each Unit in the PLC must have a unique unit number.	35
Node address (NODE No. $\times 10^1$, $\times 10^0$)	01 to 62 decimal	Each node on the network must have a unique address.	35

2-3 Mounting to Backplanes

Up to a total of four SYSMAC LINK Units (coaxial and optical) can be mounted on the CPU Rack or CS-series Expansion Racks. SYSMAC LINK Units cannot be mounted on C200H Expansion Racks or Slave Racks.

Note Tighten the screws on the Backplane to a torque of 0.9 N • m.
Tighten the mounting screws on the Units to a torque of 0.4 N • m.

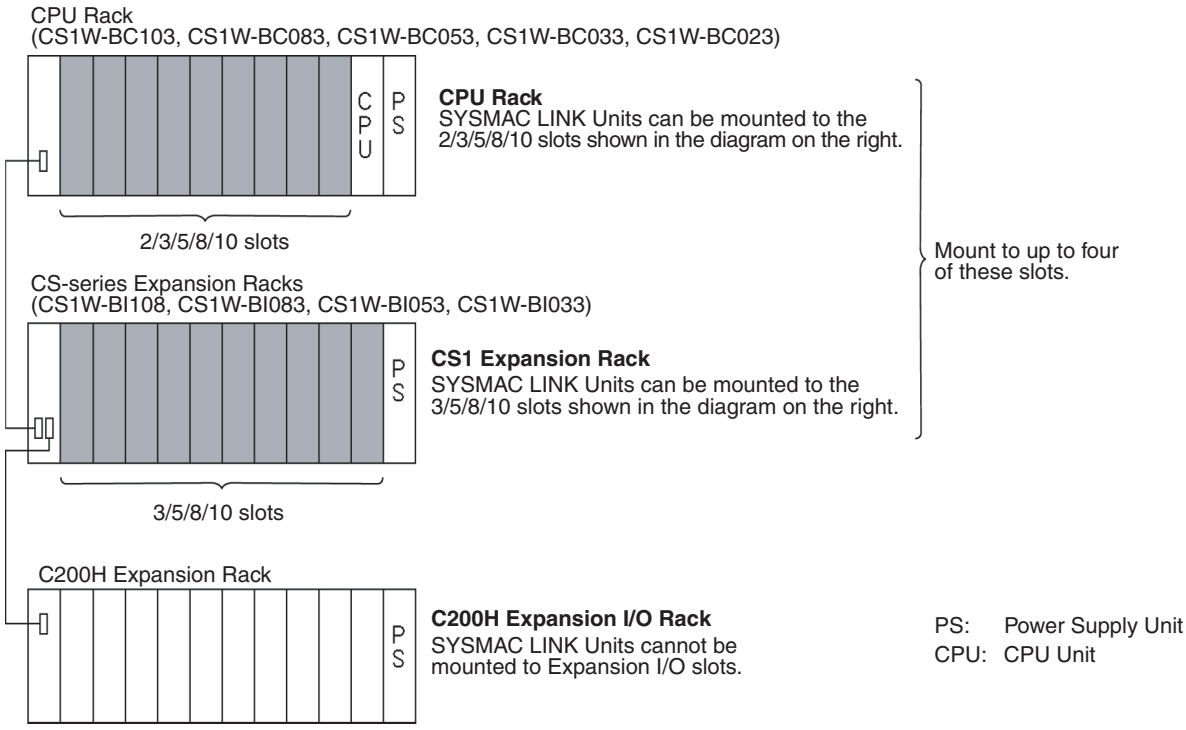

Note Up to 16 CPU Bus Units may be installed to on PLC.

2-4 Cable Connections

SYSMAC LINK Units can be connected with either coaxial cable or optical fiber cable. This section describes the procedures required to connect these cables.

2-4-1 Coaxial Units

This section describes the procedures required to connect SYSMAC LINK Units with coaxial cables.

Required Components

1,2,3...

1. **Coaxial cable and Connectors:**

   Use the 5C-2V coaxial cable designed for indoor use. Install connectors on each end of the cable. Cables must be continuous. No intervening cable connectors or breaks are permitted. OMRON recommends the following cables and connectors.

2. **F Adapters (C1000H-CE001):**

   Coaxial cables are connected to the SYSMAC LINK Units via F Adapters. One F Adapter is included as an accessory with SYSMAC LINK Units that use coaxial cables (CV500-SLK21).

3. **Terminator (C1000H-TER01):**

   Two Terminator units (sold separately) are required, one for the F Adapter at each end of the network.

Connection Procedure

The connection procedure is described briefly below.

1,2,3...

1. Install connectors on each end of the cables.
2. Connect Terminator to the F Adapter at each end of the network (i.e., to the unused connectors at the last Unit on each end). Hold the connector in one hand and press the resistance into it firmly with the other.
3. Connect the F Adapters to the SYSMAC LINK Units by firmly pushing the adapter onto the coaxial connector on the Unit and turning the locking ring to the right until it locks. Start at one end of the network and connect the F Adapters to the other end in order.

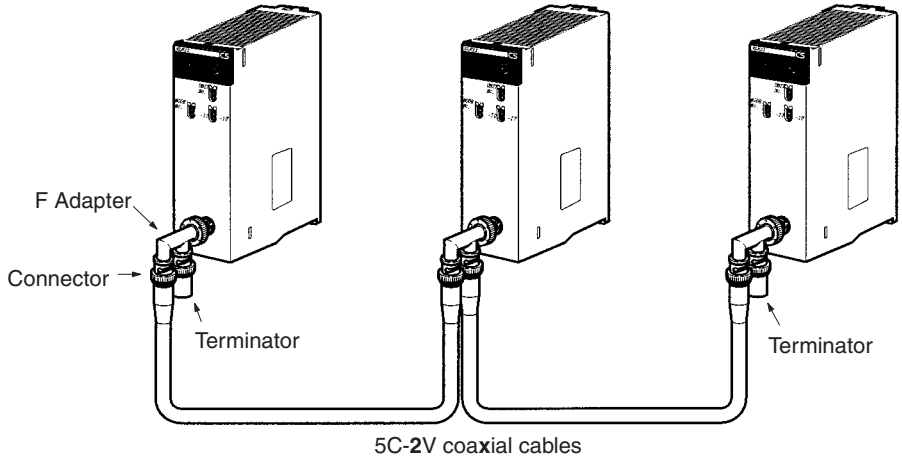

Cable Connection

1,2,3...

1. Firmly press the F-Adapter into the Unit, and turn the locking ring to the right until it locks.

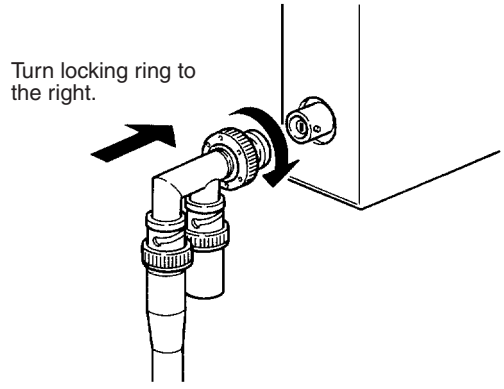

2. Place an insulation cover over the F Adapter.

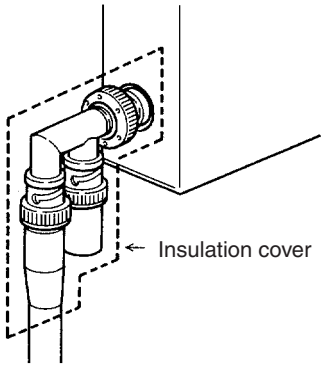

3. Any bends in the coaxial cable must be 45 mm in radius or greater (six times the outer diameter of the cable). When laying the cable, make bends of 110 mm in radius or greater (15 times the outer diameter of the cable).

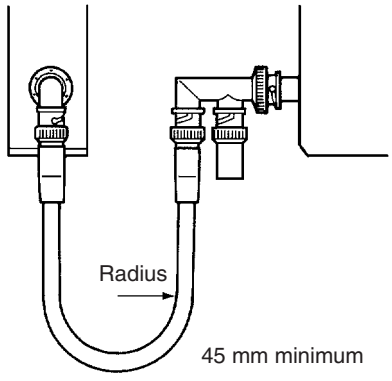

Note

(1) Before connecting or removing the coaxial cable, always touch a grounded metal object to discharge static electricity from your body.

(2) Always make sure the power is OFF before connecting the coaxial cable.

(3) Insert the coaxial connectors firmly. Also, be sure that the coaxial cable is locked before use.

Attaching Connectors to Coaxial Cable

Assemble the connector parts as shown below.

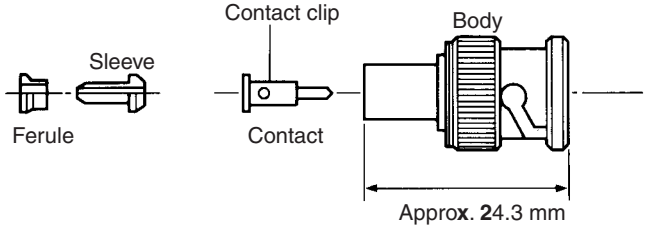

A hand crimp tool (CR-H-1130 by Dai-ichi Denshi Kogyo) is required when crimping.

1,2,3... 1. Cut the cable to the required length.

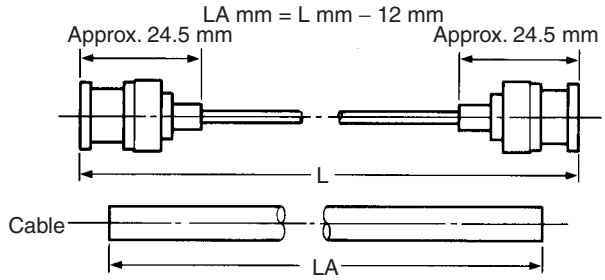

(Unit: mm)

2. Remove 15 mm of the outer covering. Be careful not to damage or to distort the braiding.

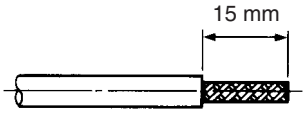

3. Insert the ferrule as shown below.

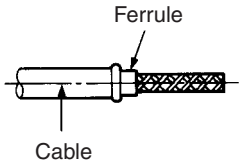

4. Spread the tip of the braiding, and insert the sleeve. Using the trimming tool, push in the sleeve flange forcefully until it fits flush with the braiding.

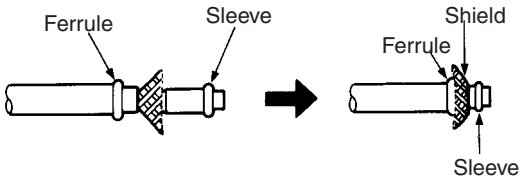

5. Align A of the central conductor polyethylene projecting towards the outside of the trimming tool with the outside of the tool as shown below and then cut the polyethylene.

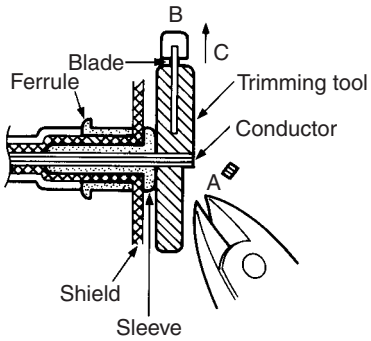

6. Using your fingertips, press down on B on the trimming tool blade, forcing the blade into the polyethylene, and twist several times. Continuing to press down on B, withdraw in the direction of arrow D as shown below.

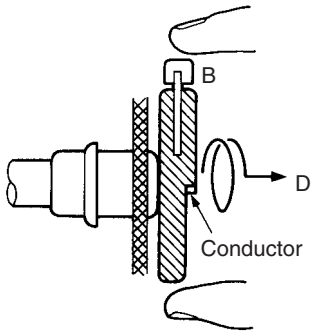

7. Use scissors to cut off any protruding braiding as shown below.

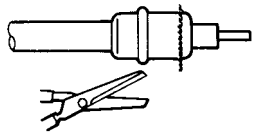

8. Insert the contact into the contact crimp adapter, and set them inside the crimp tool die. Insert the cable central conductor into the contact hole until the severed face of the polyethylene meets the contact guard. Firmly grasp the crimp tool handle and crimp.

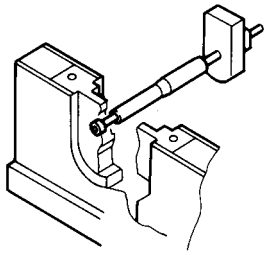

9. Insert the completed contact subassembly into the body. Gently rotate and press until the contact wings enter the insulator cavity, and align the contact tip with the insulator tip. After inserting the contact wings into the cavity, rotate the cable and the body until the body is crimped.

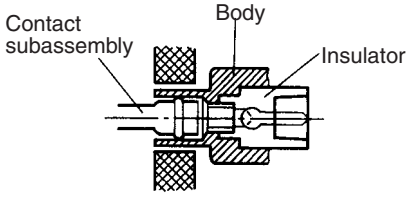

10. Open the crimp tool handle, hold the tip of the body to the body stopper as shown below, and close the handle until the ratchet can no longer turn. Align the body hole with the hexagonal part of the die and crimp. A correct crimp should resemble the diagram below.

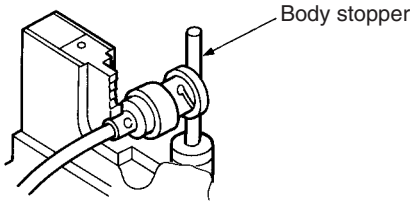

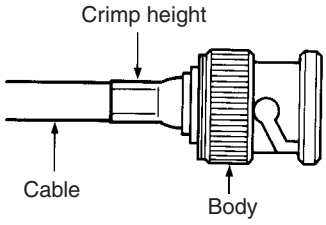

Checks After Attaching the Connector to the Coaxial Cable

Check that the body crimp is correct. If you crimp without holding the tip of the body to the body stopper, the crimp will be partway along the body as shown in the diagram on the right.

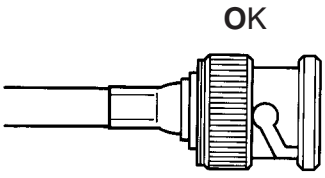

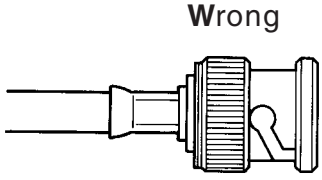

Check that the contact tip is in the same position as the open mouth of the connector.

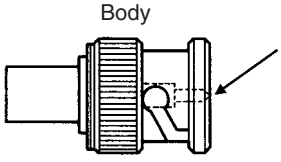

Using a tester, check the following:

- Are the central conductor and the braiding insulated in the plug shell on the coaxial cable connector?
- Are the plug shells conducting through the connectors at both ends of the coaxial cable?
- Are the central conductors conducting through the connectors at both ends of the coaxial cable?

Provide a space between the bottom of the Unit and the cable as shown below to ensure a suitable bend radius.

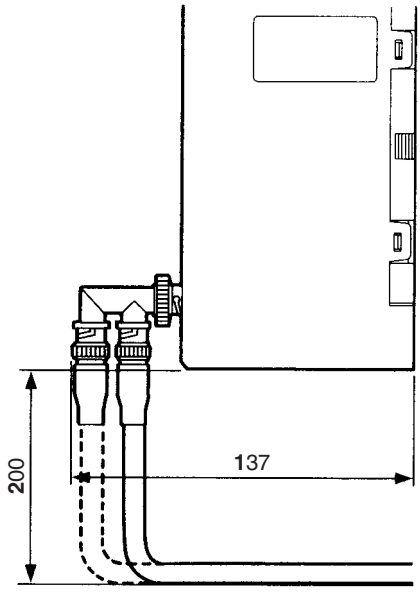

(Unit: mm)

Note Separate the coaxial cable from other power lines and high-voltage lines to prevent noise.

2-4-2 Optical Units

The following devices are required for the Optical SYSMAC LINK Network.

Required Components

Optical Fiber Cables

Use the following adhesive-polished Optical Fiber Cables (Hard Plastic-clad Fiber: H-PCF).

Name	Specifications		Model
H-PCF cables	Black	10 m	S3200-HCCB101
		50 m	S3200-HCCB501
		100 m	S3200-HCCB102
		500 m	S3200-HCCB502
		1,000 m	S3200-HCCB103
	Orange	10 m	S3200-HCCO101
		50 m	S3200-HCCO501
		100 m	S3200-HCCO102
		500 m	S3200-HCCO502
		1,000 m	S3200-HCCO103

Note The Optical Fiber Cable model numbers are as follows:

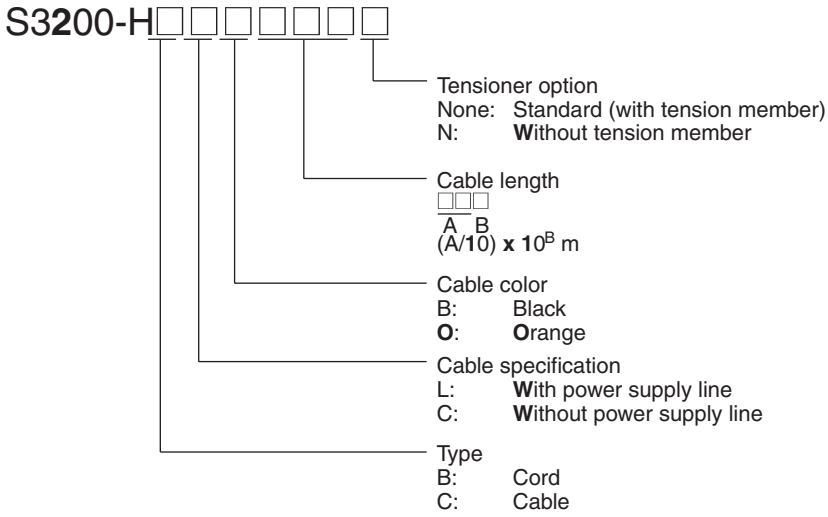

Connectors

Name	Model	Specifications
Connector	S3200-COCF2071 (See note 1.)	Use to connect a cable to a node. (Full-lock connector for crimp-cut cable.)
	S3200-COCF2571 (See note 1.)	Use to connect a cable to a node. (Half-lock connector for crimp-cut cable.)
Inline Adapter	S3200-COIAT2000	Use to connect or extend cables. (Use one adapter for each connection.)

Note

(1) Production of S3200-COCF2011 (full-lock) and S3200-COCF2511 (half-lock) Connectors has been stopped. Use the above Connectors as replacements.

(2) Either full-lock or half-lock connectors can be used in a SYSMAC LINK Network, but we recommend full-lock connectors to prevent accidental disconnections during operation.

(3) The maximum distance between nodes is slightly shorter for connectors with crimp-cut cables compared to connectors assembled with adhesive. Also, the maximum distance is reduced due to extension loss when Inline Adapters are used to extend cables.

Optical Fiber Cable with Connectors

The following adhesive-polished Optical Fiber Cables are available with Connectors already attached.

Specifications	Length	Model
Optical Fiber Cable Connectors: S3200-COCF2011 ⇓ S3200-COCF2011	2 m	S3200-CN201-20-20
	5 m	S3200-CN501-20-20
	10 m	S3200-CN102-20-20
	15 m	S3200-CN152-20-20
	20 m	S3200-CN202-20-20
	Over 20 m	S3200-CN-20-20 (Specify length (m) when ordering.)

Specifications	Length	Model
Optical Fiber Cable Connectors: S3200-COCF2011 ⇓ S3200-COCF2511	2 m	S3200-CN201-20-25
	5 m	S3200-CN501-20-25
	10 m	S3200-CN102-20-25
	15 m	S3200-CN152-20-25
	20 m	S3200-CN202-20-25
	Over 20 m	S3200-CN-20-25 (Specify length (m) when ordering.)
Optical Fiber Cable Connectors: S3200-COCF2511 ⇓ S3200-COCF2511	2 m	S3200-CN201-25-25
	5 m	S3200-CN501-25-25
	10 m	S3200-CN102-25-25
	15 m	S3200-CN152-25-25
	20 m	S3200-CN202-25-25
	Over 20 m	S3200-CN-25-25 (Specify length (m) when ordering.)

Note

(1) The cables listed above are black and have power supply lines and tension members, although the power supply lines aren't used in the SYSMAC LINK Network.

(2) All of the cables listed above are attached to the connectors with adhesive.

(3) Special training is required to assemble Optical Fiber Cables and connectors with adhesive.

Optical Fiber Cable Accessories

Use the following accessories to assemble and test Optical Fiber Cables.

Name	Model	Specifications
Optical Fiber Assembly Tool	CAK-0057 (See note.)	Crimp-cut tool for the S3200-COCF2071/2571 Connectors
Optical Power Tester	S3200-CAT2700	With S3200-CAT2702 Head Unit and adapter for the S3200-COCF2071/2571 and S3200-COCF2011/2511 Connectors
Master Fiber Set	S3200-CAT2001H	One meter cable for use with the S3200-CAT2702 Head Unit

Note Use the CAK-0057 (made by Sumitomo Electric Industries, Ltd.) to assemble the S3200-COCF2071/2571 Connectors. (Production of the S3200-CAK1062 Assembly Tool has been stopped.) The S3200-COCF2071/2571 Connectors can be assembled using the S3200-CAK1062 by adding the JRFK-57PLUS (made by Sumitomo Electric Industries, Ltd.).

This manual does not provide details on Optical Fiber Cable preparation. For details, refer to the instructions provided with the CAK-0057 or S3200-CAK1062 Assembly Tool.

Optical Fiber Cable Connections

All of the nodes in an Optical SYSMAC LINK Network are connected in a line (daisy-chain configuration) with H-PCF Optical Fiber Cable.

The nodes can be connected in any order, but be sure to begin with the upper connector (SL1) of the highest node in the network and connect to the lower connector (SL2) in the next lower node, as shown in the following diagram.

Also be sure to cover the unused connectors on the highest and lowest nodes in the network with the provided Optical Connector Covers.

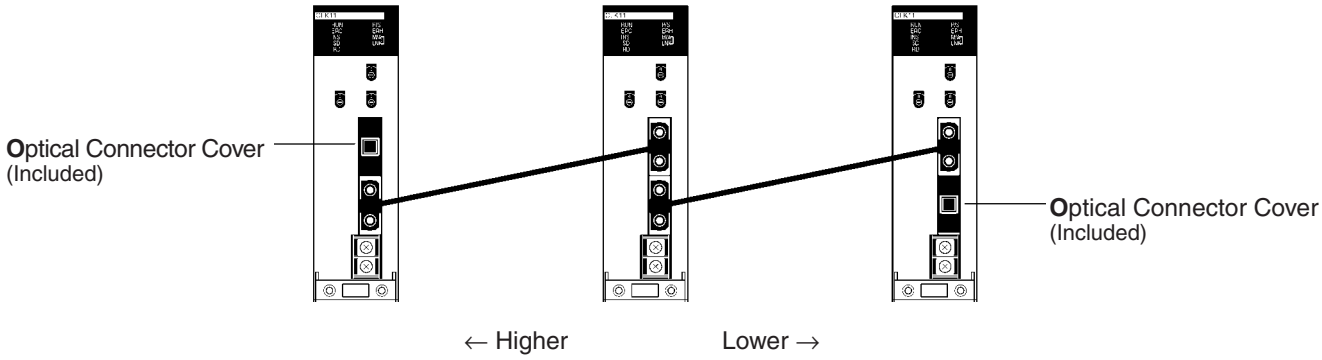

Note (1) Always use the specified Optical Fiber Cables.

(2) The maximum distance between nodes depends on the method used to attach the connector to the cable.

Installing Connectors

A special connector is used to connect the Optical Fiber Cable to the SYSMAC LINK Unit.

This manual does not provide details on Optical Fiber Cable preparation.

Observe the following precautions when connecting the Optical Fiber Cables.

- Always turn OFF the PLC power supply before connecting Optical Fiber Cables.
- Special tools are required to attach Optical Fiber Cables to the connectors. The cable may disconnect from the connector if the proper tools and methods are not used during cable assembly.
- Insert the connectors completely and always check that the connectors are locked before starting operation.
- If a connector becomes disconnected, the node will be unable to communicate with other nodes in that part of the network. The network will be divided into two and communications with the remaining nodes will be unreliable. Be sure not to remove connectors during communications.

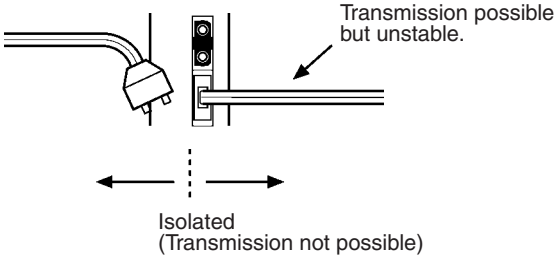

- Do not pull on the Optical Fiber Cable too forcefully.
  The maximum tension that can be applied to the cord is 10 kg and the maximum tension that can be applied to the cable is 50 kg.

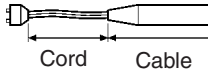

- Do not bend the cable too sharply. The minimum radius for bends is 10 cm.

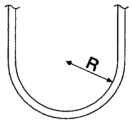

- To prevent the Optical Fiber Cable from being pulled too forcefully, always use the cable securing bracket and provide space behind the Unit as shown in the following diagram. Do not exceed the maximum tension for the cord and cable:

  Cord: 0 kg (Do not apply any tension.)
  Cable: 5 kg

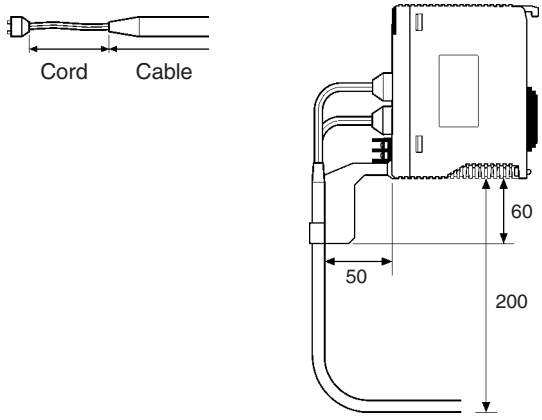

- Do not place objects on top of the Optical Fiber Cable. The maximum pressure that can be placed on the cord and cable is as follows:

  Cord: 30 kg/10 cm
  Cable: 50 kg/10 cm

- Inspect the connector before installing it.

Connection Procedure

Use the following procedure to connect Optical Fiber Cables to a Unit.

1,2,3...

1. Tighten screws in the mounting brackets so that the through-holes on the terminal are on the top and bottom and then affix hexagonal nuts from the opposite side of the terminal.
2. Insert bushing to the mounting bracket and secure the Unit with screws.
3. Pass the tension member through the through-holes, and tighten the terminal screws to affix the tension member.
4. Affix the cable to the mounting bracket so that it is clamped by the bracket. Two cables can be attached at the same time.
5. Move the cable connector so that the loose ends are on the left-hand side, and insert the Unit's optical connector as far as it will reach.

2-4-3 Backup Power Supply

Each node requires a backup power supply for the node bypass function. Several nodes can be connected to a single power supply or each node can be connected to an independent power supply.

Be sure that the backup power supply is providing sufficient current and voltage at the Unit's connector.

Backup Power Supply Specifications

The following table shows the input specifications required for backup power supply to SYSMAC LINK Units. Be sure that the backup power supply being used meets these specifications. (We recommend the OMRON S82K-series Power Supplies.)

Item	Specification
Voltage	24 V DC
Allowed voltage fluctuation	20.4 to 26.4 V DC (24 V DC –15% to +10%)

Item	Specification
Current consumption	200 mA max. at 24 V DC (per node)
Inrush current	2.5 A max. (24 V DC, 5-ms rise time)

Note

(1) A label has been placed over the upper surface of the SYSMAC LINK Unit to prevent wire cuttings from entering the Unit. When wiring the backup power supply, leave the label in place.

(2) When wiring is complete, remove the label to avoid overheating.

(3) Use a power supply that is not connected to PLC operation, as in the case of the node bypass function, for the backup power supply so that when the power to the PLC is turned OFF, the backup power supply will continue.

(4) Use a dedicated power supply for the backup power supply. Do not share a power supply being used for I/O, motors, or control systems.

(5) When two or more nodes are connected to a single backup power supply, wire each node separately.

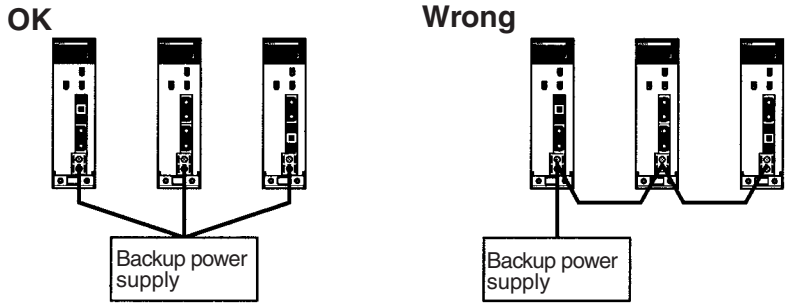

Note Unlike the CV500-SLK11, the CS1W-SLK11 does not require an Auxiliary Power Supply Unit for the node bypass function. Instead, directly connect a 24-VDC external power source as a backup power supply.

Attach crimp terminals to the power supply cable when connecting the backup power supply to the SYSMAC LINK Unit.

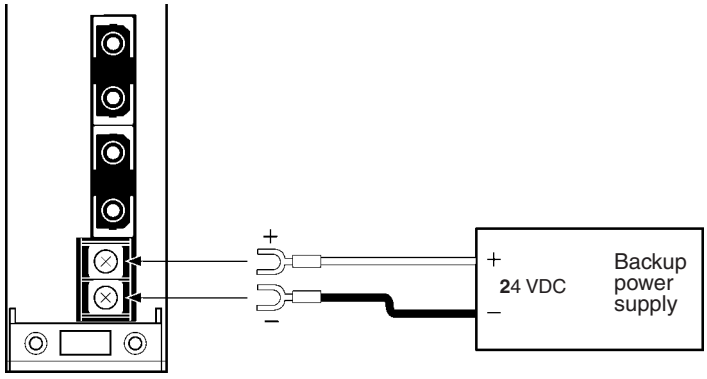

Crimp Terminals

Use an M3 crimp terminal, as illustrated below.

Recommended Crimp Terminals

Manufacturer	Model	Remarks	Suitable wiring range
Japan Crimp Terminals KK	V1.25-N3A	Vinyl insulated forked terminal	0.25 to 1.65 mm^2 (AWG #22 to #16)
	V1.25-MS3	Vinyl insulated round terminal	
MOLEX JAPAN CO., LTD.	VSY1.25-3.5L	Vinyl insulated forked terminal	0.3 to 1.65 mm^2 (AWG #22 to #15)
	RAV1.25-M3	Vinyl insulated round terminal	

Note

(1) Always turn OFF the power to the PLC and the backup power supply before connecting the backup power supply cables.

(2) Separate the backup power supply wires from other power lines and high-voltage lines to prevent noise.

(3) Always use a crimp terminal for wiring. Do not connect a wire that has only been twisted directly to a terminal block.

(4) In the interests of safety, it is recommended that round crimp terminals are used.

(5) When mounting the crimp terminal, always use the appropriate tools for each crimp terminal and follow the appropriate installation procedures. Contact the crimp terminal manufacturer for details on the appropriate tools and procedures. Failure to use the appropriate tools and procedures could cause cables to break.

(6) Measure the length of peeled cable during installation according to the crimp terminal used and make sure that the peeled length is not too long. Cover the compressed section of the crimp terminal and cable with vinyl tape or heat-shrinking tube.

(7) Be sure not to reverse the power supply polarity.

(8) Tighten the screws on the terminal block firmly. The correct tightening torque is 0.5 N • m. If the screws are too loose, short-circuit, malfunction or burning may result.

(9) Do not pull backup power supply cables with excessive force.

(10) Do not bend backup power supply cables.

(11) Do not place any object on top of backup power supply cables.

(12) Supply power only after checking the wiring thoroughly.

SECTION 3
Basic Communications

A description of the token bus method of communications used in SYSMAC LINK Systems is described briefly in this section, as well as the basic settings necessary for operation.

3-1 SYSMAC LINK System Communications 34
3-2 Unit Number 35
3-3 Setting Node Address 35
3-4 Network Address Setting 36
3-5 Network Parameters 36
3-6 Memory Areas 38
3-6-1 Word Allocations 38
3-6-2 Word Applications 39

3-1 SYSMAC LINK System Communications

SYSMAC LINK Units communicate through the SYSMAC LINK Network, a token bus LAN. This section describes the token bus communications used in the SYSMAC LINK Network.

Token Bus Communications

In token bus communications, individual nodes are connected to a main trunk line as a common bus line, as shown in the figure below.

To avoid having two nodes attempt to transmit simultaneously, only one node has the right to transmit at a time. The right to transmit is held by the node that holds what is called the token, which is passed in sequence from node to node, beginning with the node with the lowest node address (the polling node, see below).

If the token is passed to a node that does not have data to transmit, the token is immediately passed to the node with the next higher node address. The node with the highest node address passes the token back to the node with the lowest node address. In this way, each node in the network has its turn to transmit data without interfering with other nodes.

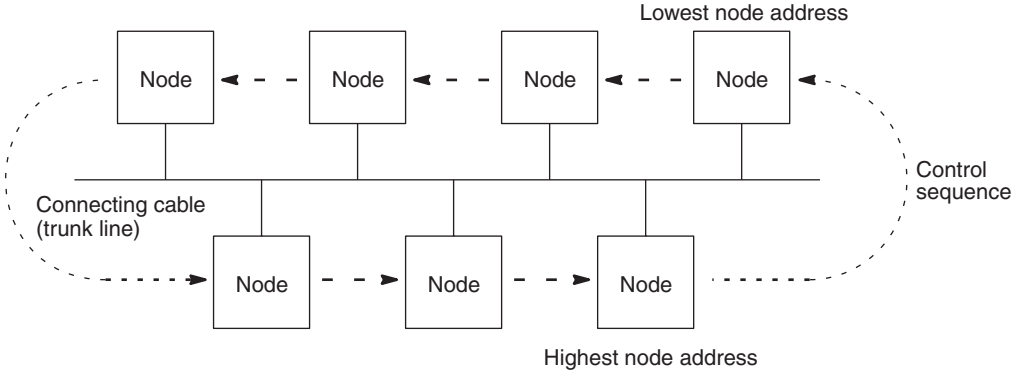

Polling Node

In a SYSMAC LINK Network there is one node, called the polling node, that controls communications in the network. Normally, the Unit with the lowest node address is the polling node. If the polling node fails, the node with the next higher node address automatically becomes the polling node, preventing the whole network from failing.

Startup Node

The node that starts the data link in a SYSMAC LINK Network is called the startup node. The data link operates using the parameter settings in the DM Area at the startup node. With automatic allocation of link words, the DM parameter area settings are used, and with manual allocation, the common link parameters in the startup node are used.

Communications Cycle

The token in a SYSMAC LINK Network is first passed from the polling node. The token is passed in sequence from node to node by node address until it is finally returned to the polling node. One complete circuit around the network is known as a token cycle.

At the end of each token cycle, the polling node polls all of the nodes in the network to check whether any nodes have been added to or removed from the network. The updated information on the network is transmitted to all nodes. This polling and updating process is known as the polling cycle.

When the control cycle is completed, the polling node once again passes the token, beginning the next token cycle. Together the token cycle and control

cycle make up the communications cycle, and the time required for the communications cycle is known as the communications cycle time.

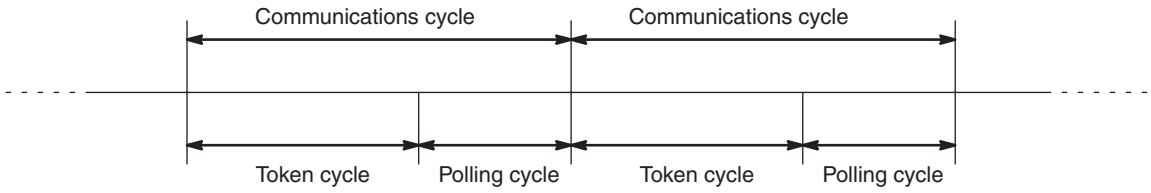

Network Parameters

The communications cycle time is one of the network parameters. The other network parameters are the number of polled units, maximum number of frames, and the maximum node address. These parameters are transmitted from the polling node to the other nodes in the network. Refer to *3-5 Network Parameters* for details on the network parameters.

Refresh Cycle Time

Data is constantly being refreshed in the data link words between the SYSMAC LINK Unit and the CPU Unit while the data links are operating. By refreshing data, the CPU Unit sends local node data to the SYSMAC LINK Unit, and receives data from other nodes from the SYSMAC LINK Unit. The interval between data refreshing is called the refresh cycle time. The refresh cycle time can be monitored using the Support Software.

3-2 Unit Number

Up to four SYSMAC LINK Units can be mounted on a CS-series PLC and used to connect each Unit to a different SYSMAC LINK Network. Because the PLC incorporates bridge and gateway functions, these and other networks can exchange data via the CPU Unit. If more than one SYSMAC LINK Unit or other CPU Bus Unit is mounted on a single PLC, however, each Unit needs a unit number for identification.

Setting

Use the rotary switches on the front panel to set the unit number.

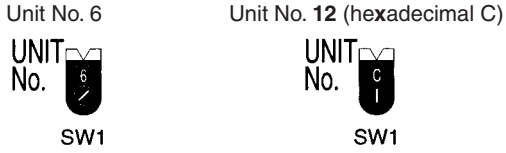

Setting Value Range

A total of 16 SYSMAC LINK Units and/or other CPU Bus Units can be mounted on a single PLC. Of these, up to four can be SYSMAC LINK Units.

The unit number settings range is from 0 to F Hex.

Note

(1) Each Unit connected to the same PLC must have a unique number.

(2) Turn OFF the PLC when setting the rotary switches.

(3) If the unit number of any node has been changed, the I/O table on the PLC must be generated again and that node must be turned ON after all other nodes have been turned ON.

3-3 Setting Node Address

In token bus communications used in the SYSMAC LINK Network, the node addresses make a logical ring around which the token is passed. The logical ring of node addresses takes the place of the actual physical ring used in some other networks. Consequently, proper setting of the node addresses is essential to network operation.

Settings

Node address switches determine the node address. The left switch sets the ten's digit; the right switch sets the one's digit. The node address must be between 01 and 62. Each SYSMAC LINK Unit in a Network must have a unique node address.

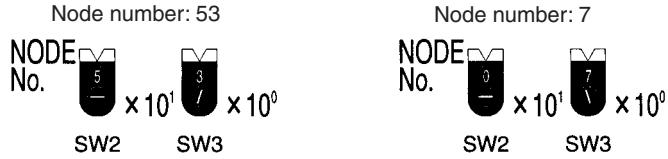

Note

(1) Always turn OFF the PLC power before setting or changing node address.

(2) If the node address set on the Unit is outside of the allowed range (01 to 62), a communications error will occur and the red ERC indicator will light on the Unit.

(3) Each Unit in the network must have a unique node address, so be sure not to use the same address on more than one Unit.

(4) The token is passed from node to node according to node addresses, so the more dispersed the node addresses are, the greater distance the token has to travel. In optical fiber systems, the communications cycle time depends on the distance the token has to travel, so set node addresses in the same order as the nodes' positions in the network if possible.

(5) If you change a node address, start up the changed node last, and have it participate in the network last.

3-4 Network Address Setting

It is necessary to set a network address on each PLC for data exchange between networks. By setting the network address, the local node can exchange data with a destination node even if there is another network between them.

Setting

Use the Support Software to set the network address in the routing tables in the CPU Unit (refer to *5-2 Routing Tables*). Refer to the Support Software operation manuals for setting details.

Setting Range

A system can include up to 127 networks. The setting range of the network address is thus 1 to 127 (decimal). (Network address 0 is used to indicate the local network.)

3-5 Network Parameters

The operation of the SYSMAC LINK Network is determined by the network parameters. Network parameters are set with Peripheral Devices, such as the Support Software, and are automatically backed up within the SYSMAC LINK Unit. The network parameters stored in the polling node are used in actual system operation; the network parameters in other Units are ignored.

Network Parameters

The following table shows the network parameters, their default values, and the ranges within which the parameters can be set by the user. Default values and setting ranges are in decimal.

Network parameter	Default value	Setting range
Communications cycle time	Automatic	5 to 255
Maximum node address	62	2 to 62

Network parameter	Default value	Setting range
Number of polled units per communications cycle	4	1 to 62
Maximum number of frames per communications cycle	10	5 to 255

Communications Cycle Time

This parameter sets a timer that fixes the length of the communications cycle to the specified time. The timer operates only when the data link is in operation. Set the communications cycle time when setting the data link table's common link parameters.

When the timer is in operation, the communications cycle time is fixed at the specified value, independent of the number of events that occur. Refer to *4-11 Data Link Characteristics* for the formula needed to calculate the communications cycle time when the data link is set for automatic generation.

Maximum Node Address

This parameter sets the maximum node address that a node can have and still be a part of the network. Nodes with node addresses greater than the maximum node address will not be polled, and therefore will not participate in network communications. This eliminates unnecessary polling of units with node addresses above the maximum, and thus reduces the time required for communications.

Note Set the maximum node address above the highest node address set on the SYSMAC LINK Units currently connected unless you specifically want to exclude one or more nodes from system operation.

Number of Polled Nodes

This parameter determines how many nodes will be polled by the polling node during a polling cycle. Setting a high number of Units increases the communications cycle time, but reduces the time required to recognize that nodes have been removed from or added to the network.

Maximum Number of Frames

This parameter determines how many event transmissions can take place during a token cycle when data links are operating. With the default value of 10 frames, up to 4 event transmissions can be issued.

Event transmissions include instructions such as SEND(90), RECV(98), or CMND(490), as well as processes such as remote monitoring and remote programming from the Support Software.

Setting a high number of frames increases the communications cycle time, while setting a low number will cause errors because of restrictions on event transmissions when the data link is operating. Increase the number of frames by three for each additional event transmission if data links are operating.

Setting Network Parameters

Network parameters are set from the Support Software. Refer to the Support Software manual for details. Network parameters are enabled immediately after being set.

Note

(1) Do not set network parameters while data links are operating.

(2) Set the maximum node address to a value greater than the maximum node address used in the SYSMAC LINK Units connected to the network.

3-6 Memory Areas

The CPU Bus Unit Area and part of the DM Area in the CPU Unit are used to write or read the status of the nodes and the data links of SYSMAC LINK Units. The data from the SYSMAC LINK Unit is written to the input words in these areas.

3-6-1 Word Allocations

The memory areas that are used to write or read the data will be allocated according to the unit number.

CPU Bus Unit Area

Each CPU Bus Unit is allocated 25 words from between CIO 1500 and CIO 1899 as follows:

Unit No.	Words	Unit No.	Words
0	CIO 1500 to CIO 1524	8	CIO 1700 to CIO 1724
1	CIO 1525 to CIO 1549	9	CIO 1725 to CIO 1749
2	CIO 1550 to CIO 1574	10	CIO 1750 to CIO 1774
3	CIO 1575 to CIO 1599	11	CIO 1775 to CIO 1799
4	CIO 1600 to CIO 1624	12	CIO 1800 to CIO 1824
5	CIO 1625 to CIO 1649	13	CIO 1825 to CIO 1849
6	CIO 1650 to CIO 1674	14	CIO 1850 to CIO 1874
7	CIO 1675 to CIO 1699	15	CIO 1875 to CIO 1899

DM Area

Each CPU Bus Unit is also allocated 100 words from between D30000 and D31599 as follows:

Unit No.	Words	Unit No.	Words
0	D30000 to D30099	8	D30800 to D30899
1	D30100 to D30199	9	D30900 to D30999
2	D30200 to D30299	10	D31000 to D31099
3	D30300 to D30399	11	D31100 to D31199
4	D30400 to D30499	12	D31200 to D31299
5	D30500 to D30599	13	D31300 to D31399
6	D30600 to D30699	14	D31400 to D31499
7	D30700 to D30799	15	D31500 to D31599

3-6-2 Word Applications

The applications of the words in the CPU Bus Link Area and DM Area that are allocated to SYSMAC LINK Units are described in the following tables.

CPU Bus Unit Area

The words allocated in the CPU Bus Unit Area to a SYSMAC LINK Unit are used to access the status of the SYSMAC LINK System as shown in the following table.

I/O	Word	Bit	Item	Page
---	+0	0 to 15	Reserved by the system.	---
Inputs (from SYSMAC LINK Unit to CPU Unit)	+1	0	1: Network parameter error	129
		1	1: Data link table error	129
		2	1: Routing table error	129
		3	1: Communications Unit (SYSMAC LINK Unit) setting error	---
		4 to 6	Reserved by the system.	---
		7	1: EEPROM error	---
		8	1: Node address setting error	128
		9	1: Node address duplication error	128
		10	1: Network parameter disagreement error	---
		11	1: Network controller error	
		12 to 14	Reserved by the system.	---
		15	0: No error log record 1: Error log record(s) exists	128
	+2 to +4	0 to 15	Network participation (1 bit per Unit for each of 62 Units) 0: Not participating 1: Participating	40
	+5	0 to 13		
		14 to 15	Reserved by the system.	---
	+6	0 to 7	Local node address	35
		8 to 15	Local network address	36
	+7	0 to 7	Node address of polling node	34
		8 to 15	Local unit number	35
	+8 to +22	0 to 15	Data link status on each node using 4 bits per Unit for each of 62 Units: CPU Unit operating, CPU Unit error, communications error, no error (data links operating)	56
	+23	0 to 7		
		8 to 13	Node address of startup node (for data links)	
		15	Local Data Link Active Flag 1: Local node data links active. 0: Local node data links not active.	
	+24	0 to 10	Reserved by the system.	---
		11	0: No power supply 1: Power being supplied (CS1W-SLK11 only)	17
		12 to 15	Reserved by the system.	---

Network Participation Status

If a node is participating in a network, the bit corresponding to the node address will be ON. Node addresses (1 through 62) and their corresponding bits are listed in the following table. (Bits 14 and 15 of word +5 are always 0.)

Word: 1500 + (25 x Unit Number) + 2 to 5

	Bit	15	14	13	12	11	10	9	8	7	6	5	4	3	2	1	0
Word	+2	16	15	14	13	12	11	10	9	8	7	6	5	4	3	2	1
	+3	32	31	30	29	28	27	26	25	24	23	22	21	20	19	18	17
	+4	48	47	46	45	44	43	42	41	40	39	38	37	36	35	34	33
	+5	-	-	62	61	60	59	58	57	56	55	54	53	52	51	50	49

Note Even if the local node is disconnected from the network, only the bit corresponding to the local node is turned OFF (i.e., the entire status area participating in the network is not turned OFF). While the local node is disconnected, the bits corresponding to the other nodes will not be refreshed, even if the participation status of other nodes changes.

Software Switches (D30000 + 100 × Unit Number)

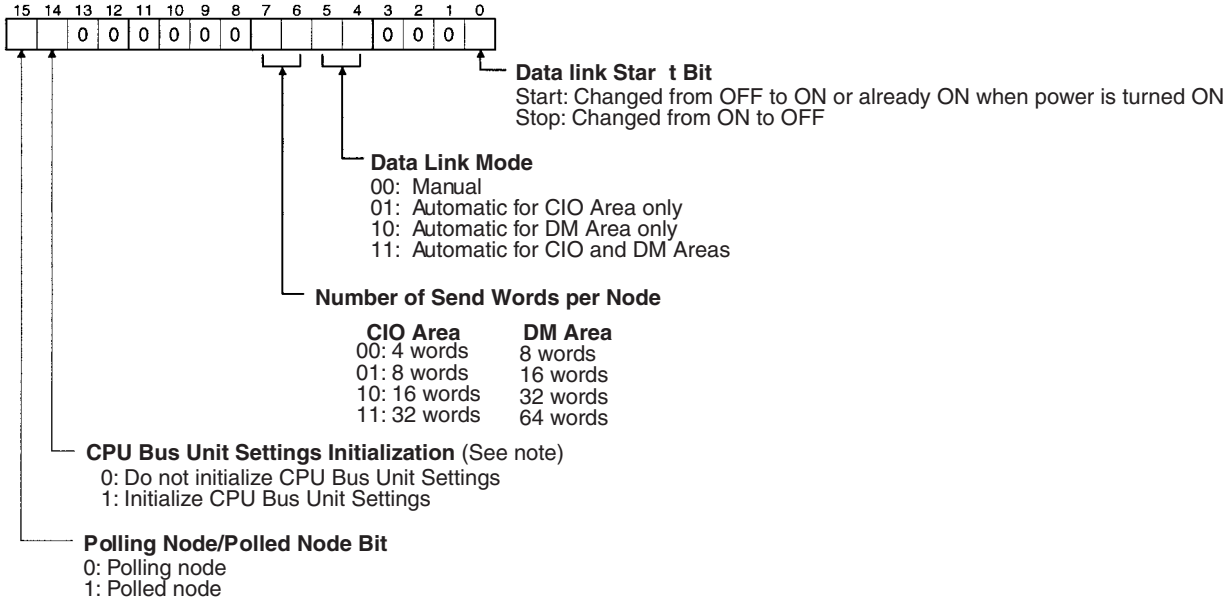

Note Initializes the network parameters registered in the CPU Bus Unit Setting Area in the CPU Unit and clears the data link tables.

SECTION 4
Data Links

The operation of data links, procedures required to establish data links, and methods of monitoring data link operations are described in this section.

4-1 Introduction 42
4-2 Data Link Specifications 43
4-3 Data Link Indicators 44
4-4 Data Link Settings 44
4-4-1 Rotary Switches 44
4-4-2 Specifying Data Link Mode and Number of Data Link Words 45
4-4-3 Data Link Start/Stop Bit 45
4-5 Creating Data Links 46
4-5-1 Automatic and Manual Settings 46
4-5-2 Automatic Data Link Tables 47
4-5-3 Manually Generating Data Link Tables 48
4-5-4 Table Backup 48
4-6 Data Link Area Allocations 49
4-6-1 Automatic Settings 49
4-6-2 Manual Settings 49
4-6-3 Refreshing Data Links with Automatic Settings 51
4-6-4 Refreshing Data Links with Manual Settings 52
4-7 Data Link Table Example 53
4-8 Controlling Data Links 55
4-8-1 DM Parameter Area Software Switches 56
4-8-2 DATA LINK START/HALT Commands 56
4-8-3 CX-Net in CX-Programmer 56
4-9 Data Link Status 56
4-9-1 Data Link Status 57
4-9-2 Word Structure 59
4-10 Data Link Precautions 60
4-11 Data Link Characteristics 62
4-11-1 Data Link Communications Cycle Time 62
4-11-2 Data Exchange Timing 64
4-11-3 Calculation Examples for Data Link I/O Response Times 65
4-12 CX-Programmer Procedures 67
4-12-1 Overall Procedure 67
4-12-2 Data Link Settings 68

4-1 Introduction

Data links can be created between PLCs or PLCs and computers in a SYSMAC LINK Network to exchange data. This data is transferred between interconnected PLCs automatically without requiring the use of normal I/O Units.

Words in the CIO and/or DM Areas are set aside as the data link words in each PLC that is in the data link. Some of the data link words are allocated to the local node and the rest are allocated to other nodes. Data can be written only to the words allocated to the local node. During data link refreshing, data written in the local node is transferred to corresponding words in other nodes' memory areas. The result is that each PLC in the data link has a common data link area, the only difference being in the read/write permissions for the various words in it.

Data Link Tables

The data link words in each PLC are defined by a data link table, which includes both common link parameters and refresh parameters. The common link parameters define the words output by each node in the data link and are thus the same for all nodes, and the refresh parameters define the words input by each node and can thus be different for each node.

Data link tables can be generated automatically or manually. Automatic generation is accomplished simply by setting parameters in the DM Area. Manual generation is accomplished by setting specific data links from the CX-Net in CX-Programmer.

The following diagram shows the operation of a data link among four nodes in a network. This data link was generated manually.

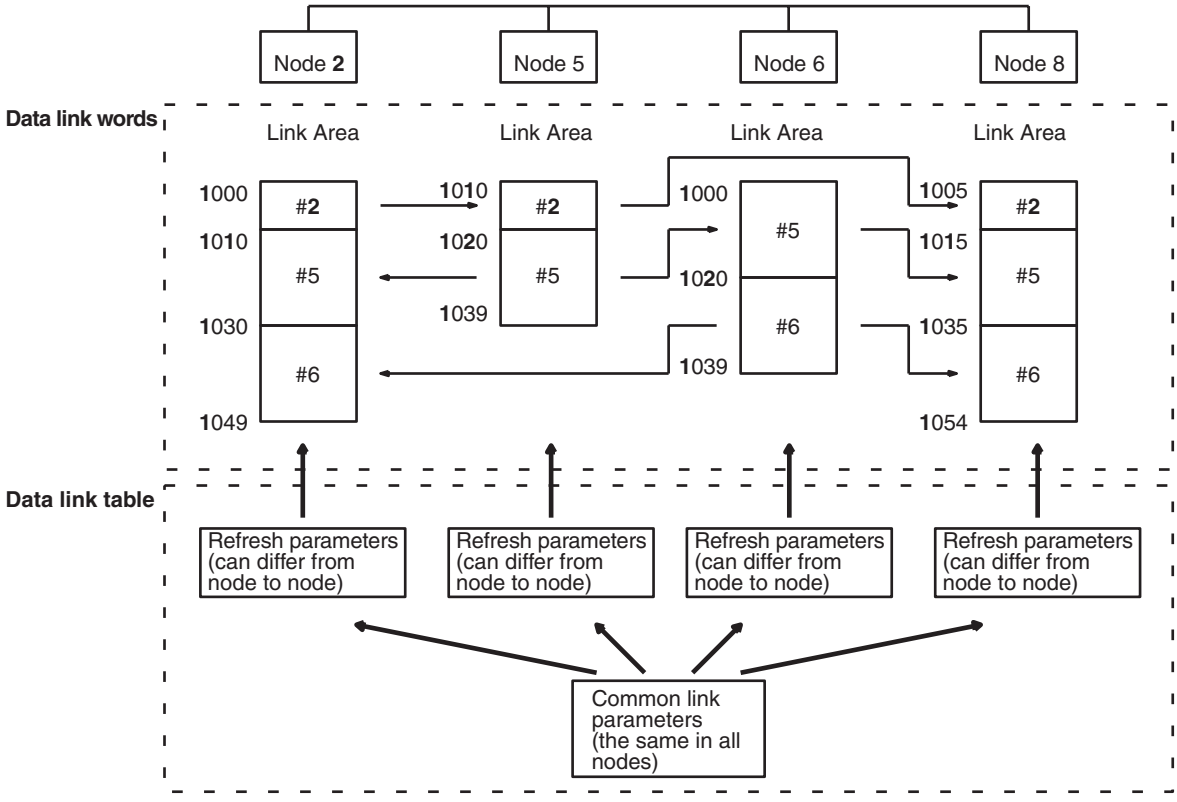

Table Generation

Data link tables can be generated automatically or manually. Data link tables generated automatically are identical in all PLCs in the data link, with the words of the data areas listed below divided equally among 2, 4, 8, or 16 nodes. The number of words allocated to each node depend on the number of nodes linked and is given in *4-2-1 Specifications Table* later in this section.

CIO Area	CIO 1000 to CIO 1063
DM Area	D00000 to D00127

Manual generation provides much greater flexibility in making data links among PLCs, but require that you manually input the data link tables. Manually generated data links can contain far more words and can use any part of the CIO Area and/or DM Area, as shown in the following table.

Area	Data Link Area
CIO Area	CIO 0000 to CIO 6143
DM Area	D00000 to D32767

Note Use Ver. 1.2 Service Pack 1 of the CX-Programmer. Settings for CS-series SYSMAC LINK Units cannot be made with earlier versions of the CX-Programmer.

Controlling Data Links

Data links can be activated and deactivated by turning ON and OFF bit 00 of the first CPU Bus Link Area word allocated to the SYSMAC LINK Unit in PLC memory, i.e., bit 00 of word D30000 + (100 x unit number).

4-2 Data Link Specifications

Basic specifications for data links are provided in the following table.

Item	Description
Number of data link nodes	62 max., 2 min.
Number of linked words per node	CIO Area: 254 words max. DM Area: 254 words max.
Maximum number of linked words in network	2,966 words (918 words for any Network with one or more C200H PLCs)
Automatically generated data links	Set in DM Area parameters. (See following table)
Manually generated data links	Set from the CX-Net in CX-Programmer.
Status Area (in CPU Bus Link Area)	CIO 1500 + (unit number x 25) + 8 to 23 (See following table)
Data link table backup	CPU Bus Unit Setting Area inside CPU Unit (only for manually set data links)

Data Link Allocations for Automatic Settings

Area	Words allocated	Number of words per node			
		2 nodes	4 nodes	8 nodes	16 nodes
CIO Area	CIO 1000 to CIO 1063	32	16	8	4
DM Area	D00000 to D00127	64	32	16	8

Status Area Words

Unit No.	Words	Unit No.	Words
0	CIO 1508 to CIO 1523	8	CIO 1708 to CIO 1723
1	CIO 1533 to CIO 1548	9	CIO 1733 to CIO 1748
2	CIO 1558 to CIO 1573	10	CIO 1758 to CIO 1773
3	CIO 1583 to CIO 1598	11	CIO 1783 to CIO 1798
4	CIO 1608 to CIO 1623	12	CIO 1808 to CIO 1823
5	CIO 1633 to CIO 1648	13	CIO 1833 to CIO 1848
6	CIO 1658 to CIO 1673	14	CIO 1858 to CIO 1873
7	CIO 1683 to CIO 1698	15	CIO 1883 to CIO 1898

4-3 Data Link Indicators

The data link status can be checked using an indicator on the SYSMAC LINK Unit.

CS1W-SLK11

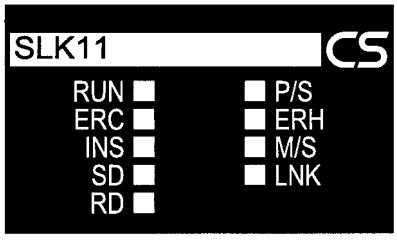

CS1W-SLK21

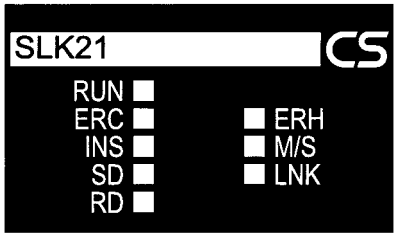

Name	Condition	Meaning
LNK	Lit	Data links are operating normally.
	Flashing	Data links are not active due to data link table error.
	Rapid flashing	Data link table communications cycle time is too short.
	Not lit	Data links are not active.

Note Refer to *Setup and Activation* in *4-10 Data Link Precautions* for details.

4-4 Data Link Settings

The following settings are required to run data links.

4-4-1 Rotary Switches

Set the node address using the rotary switches on the front of the Unit. Refer to *3-3 Setting Node Address* for details on setting the rotary switches.

4-4-2 Specifying Data Link Mode and Number of Data Link Words

Set the data link mode to either automatic settings or manual settings, and set the number of send words per node for automatic settings. These settings are made in the DM Parameter Area allocated to the SYSMAC LINK Unit.

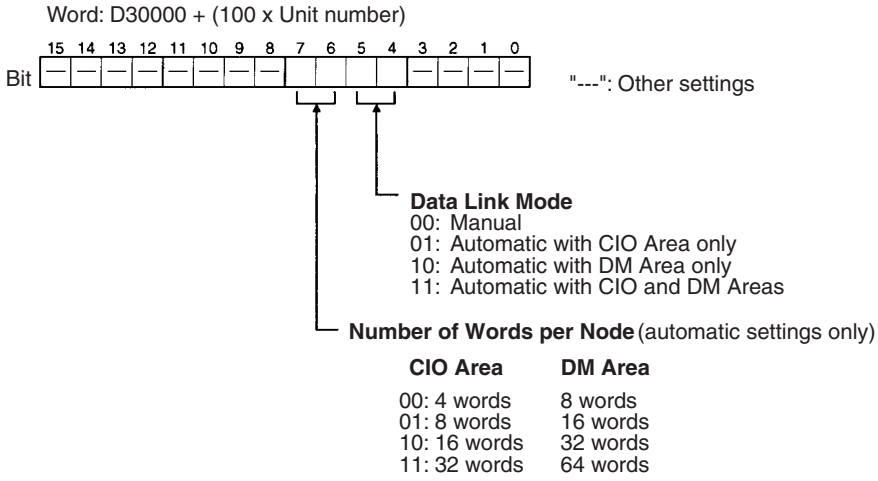

Note

(1) Set data link tables in each SYSMAC LINK node on the network when specifying manual data link tables.

(2) The data link mode (manual settings or automatic settings) and the data link system are determined by the data link settings for the startup node.

(3) Be sure to set the data link mode (manual settings) and the data link table in the DM parameter area of the startup node when using manual settings.

(4) Be sure to set the data link mode (automatic settings) and the number of data link words in the DM parameter area of the startup node when using automatic settings.

(5) The data links will not operate unless the settings are correct.

4-4-3 Data Link Start/Stop Bit

You can start and stop the data links by turning ON and OFF the bit in the first word in the startup node in the DM Area allocated in the CPU Bus Unit. This bit is in the DM Parameter Area allocated to the SYSMAC LINK Unit.

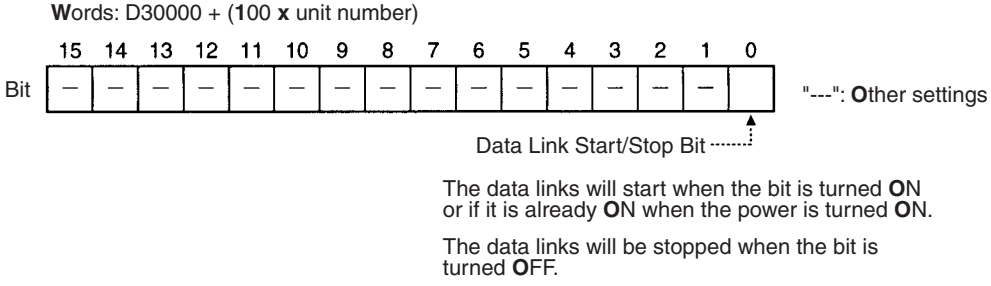

⚠ **Caution** Check the following before starting the data links. If the data link table settings or the DM parameter settings are unsuitable, there is a risk of injury due to unanticipated operation of the system.

a. Manual settings: Check that suitable data link tables have been set in each data link node. Check that data link tables have been deleted for nodes not participating in the data links.

b. Automatic settings: Check that suitable DM parameters have been set in the data link startup node.

⚠ **Caution** Even if the data link table settings or the DM parameter settings are suitable, check that there will be no adverse effects on the controlled equipment before starting or stopping the data links.

4-5 Creating Data Links

Data link tables store information required to run data link functions. The data link area is created, and data is exchanged, based on the data link tables. With manual settings, data link tables are backed up in the settings area in the words allocated to SYSMAC LINK Unit as a CPU Bus Unit in the CPU Unit.

Note Data link areas must be continuous in the CIO Area or the DM Area. You cannot make settings which leave unused words between the data link areas in either the CIO Area or the DM Area.

4-5-1 Automatic and Manual Settings

- Automatic settings: Data link tables created automatically from the DM parameter area settings.
- Manual settings: Data link tables set using Support Software.

Select either automatic or manual generation by specifying the data link mode in the DM parameter area allocated to the SYSMAC LINK Unit in the DM Area.

The differences between manually and automatically set data links are outlined in the following table.

Item	Automatic setting	Manual setting
Data link mode setting in DM parameter area (D30000 = 100 x unit No.)	Using CIO Area only Bit 5: 0, bit 4: 1 Using DM Area only Bit 5: 1, bit 4: 0 Using CIO Area and DM Area Bit 5: 1, bit 4: 1	Bit 5: 0 Bit 4: 0
Number of linked words	All nodes have the same number of linked words.	The number of words read and the number of words written can be set independently for each node.
Linkable words	The following words are automatically used: CIO 1000 to CIO 1063 D00000 to D00127	Any of the words in the CIO and DM Areas can be linked.
Number of linkable nodes	The number of nodes linked and the node addresses are automatically set depending on the number of words set per node.	Data links can be set for any portion or all of the nodes (max.: 62).

4-5-2 Automatic Data Link Tables

Settings

To automatically generate data link tables, the data link mode in the CPU Unit DM Area parameters must be set for automatic generation and the numbers of words per node in each of the CIO and DM Areas must be set. The data link mode can be set to CIO Area only, DM Area only, or CIO and DM Areas. You can select the number of send words to each node using the data link word settings.

Allocated Words

The words allocated to each node for the various word settings are given in the following table.

DM Parameter Area (D30000 + 100 x unit number)

Automatic data link mode settings		Words per node			
Bit 5: 0 Bit4: 1	**Bit 5: 1 Bit 4: 0**	**Bit 7: 0 Bit 6: 0**	**Bit 7:0 Bit 6: 1**	**Bit 7: 1 Bit 6: 0**	**Bit 7: 1 Bit 6: 1**
Bit 5: 1 Bit 4: 1		**CIO: 4 Wds, DM: 8 Wds**	**CIO: 8 Wds, DM: 16 Wds**	**CIO: 16 Wds, DM: 32 Wds**	**CIO: 32 Wds, DM: 64 Wds**
CIO Area words*	**DM Area words (see note)**				
1000 to 1003	D00000 to D00007	Node 1	Node 1	Node 1	Node 1
1004 to 1007	D00008 to D00015	Node 2			
1008 to 1011	D00016 to D00023	Node 3	Node 2		
1012 to 1015	D00024 to D00031	Node 4			
1016 to 1019	D00032 to D00039	Node 5	Node 3	Node 2	
1020 to 1023	D00040 to D00047	Node 6			
1024 to 1027	D00048 to D00055	Node 7	Node 4		
1028 to 1031	D00056 to D00063	Node 8			
1032 to 1035	D00064 to D00071	Node 9	Node 5	Node 3	Node 2
1036 to 1039	D00072 to D00079	Node 10			
1040 to 1043	D00080 to D00087	Node 11	Node 6		
1044 to 1047	D00088 to D00095	Node 12			
1048 to 1051	D00096 to D00103	Node 13	Node 7	Node 4	
1052 to 1055	D00104 to D00111	Node 14			
1056 to 1059	D00112 to D00119	Node 15	Node 8		
1060 to 1063	D00120 to D00127	Node 16			

Note When using a data link that combines C-series SYSMAC LINK Units, CS-series SYSMAC LINK Units, and CVM1/CV-series SYSMAC LINK Units, LR 00 to LR 63 in C-series PLCs correspond to CIO 1000 to CIO 1063 in CS/CV-series PLCs and DM 0000 to DM 0127 correspond to D00000 to D00127.

4-5-3 Manually Generating Data Link Tables

You can manually set the data link words by setting D30000 + 100 x unit number, bit 5 and bit 4 to OFF. The data links are set in the DM parameter area allocated to the SYSMAC LINK Unit as a CPU Bus Unit.

The manual settings, made with the CX-Net in CX-Programmer, are as follows:

Item			Contents	
Common link parameters	Communications cycle time		Set the data link communications cycle time. Select automatic or manual setting. Manual setting range: 5 to 255 ms	
	Local node send size	CIO Area	Set the CIO Area local node send size in words. Setting range: 0 to 254 words.	**Note** If 0 is set, the local node will not send data (i.e., it will receive only).
		DM Area	Set the DM Area local node send size in words. Setting range: 0 to 254 words.	
Refresh parameters	PLC type		Select “CS” when using a CS-series SYSMAC LINK Unit. If using CX-Programmer Ver. 1.2 Service Pack 1, set the CV/CVM1. (If the CV/CVM1 is set, then only the ranges supported by the CVM1/CV-series PLCs can be set.)	
	Data link start address	CIO Area	Set the start address in the CIO Area data link area for the local node. Setting range: CIO 0000 to 6143	
		DM Area	Set the start address in the DM Area data link area for the local node. Setting range: D00000 to D32767	
	Refresh node order		Set in order the node addresses with which the local node will refresh data, starting with the data link start addresses set above. If the address of the local node is set, it will send the specified word data to other nodes. If the address of another node is set, the local node will receive the data sent by that node. For example, if you enter 3, 2, 1 as the refresh order, the node addresses will be allocated in the order 3, 2, 1, starting from the start address. If the local node address is 1, it will receive data from node 3, then from node 2, and finally, it will send data itself). Always include the local node in the refresh node order. Data will not be received from the local node by another other node if the local node is not specified.	

For settings using CX-Net, refer to *4-12 CX-Programmer Procedures*.

When using a data link that combines C-series SYSMAC LINK Units, CS-series SYSMAC LINK Units, and CVM1/CV-series SYSMAC LINK Units, set the CIO Area data link words bearing in mind that the C-series data links have a maximum of 64 words from LR0 to LR63.

The data link area must be continuous in the CIO Area and in the DM Area.

4-5-4 Table Backup

Data link tables are automatically stored up in the CPU Bus Unit Settings Area of the CPU Unit of the SYSMAC LINK Unit involved if backup is specified from the Support Software. It is advisable, however, for common link and refresh parameters to be backed up for safety. Back up using the Support Software. For details, refer to the Support Software operation manuals.

Note Data link tables are set in the CPU Bus Unit Settings Area of the CPU Unit. If the CPU Unit is replaced or if the unit number or node address of a SYSMAC LINK Unit is altered, it is necessary to set the data link tables again.

4-6 Data Link Area Allocations

Data link area allocations when the data link functions are started up are carried out as shown below, depending on whether the startup node data link table has been set automatically or by the user.

4-6-1 Automatic Settings

All nodes are allocated the same data link area depending on the number of link words set in the startup node. When automatic allocations are made, the settings in nodes other than the startup node are invalid. Send word data for each node is sent to the receive words allocated to the same memory area words at the other nodes, and stored there. The shaded areas in the following diagram indicate the send words for each node.

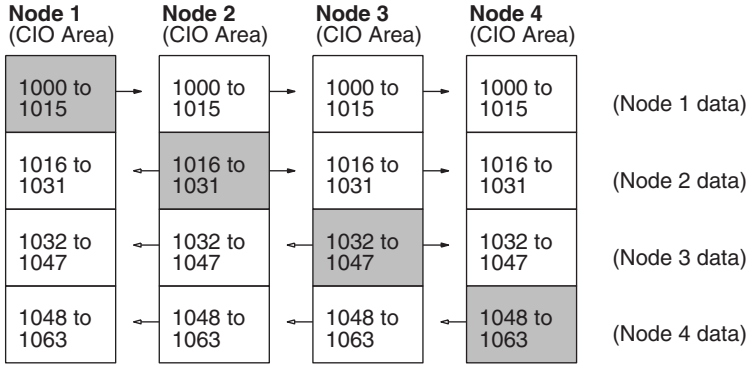

4-6-2 Manual Settings

The data link areas can be allocated as described in this section by using the refresh parameter settings for each node.

Identical Allocations for All Nodes

When editing data link table refresh parameters, set the same refresh parameters for all nodes. (Create refresh parameters for each node using the Support Software, even if the allocations are the same for all nodes. A copy function is supported that will make identical settings easy.)

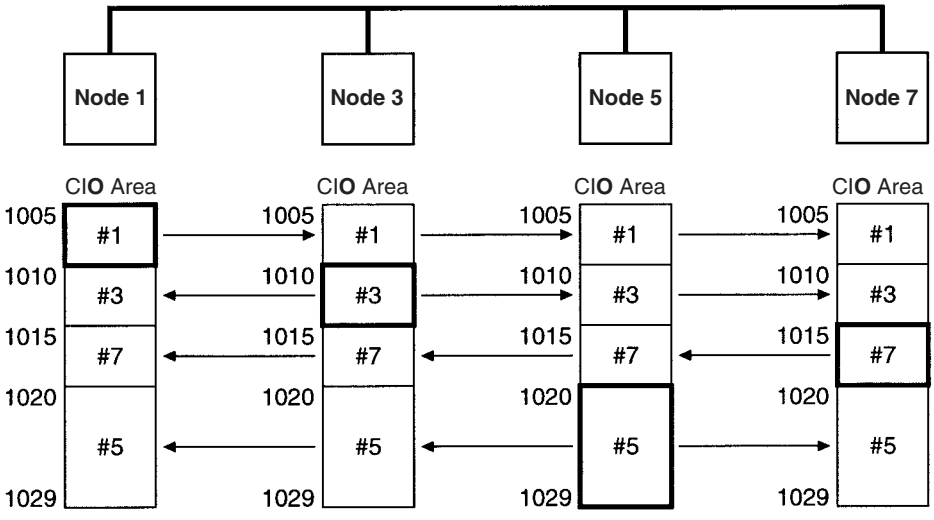

Different Allocations for Each Node

To limit receiving from specified nodes and send only or receive only from specified nodes, change the refresh parameters for each node. In the following example, node 5 does not receive data from node 6, and node 6 does not receive data from node 2. Also, node 8 only receives data.

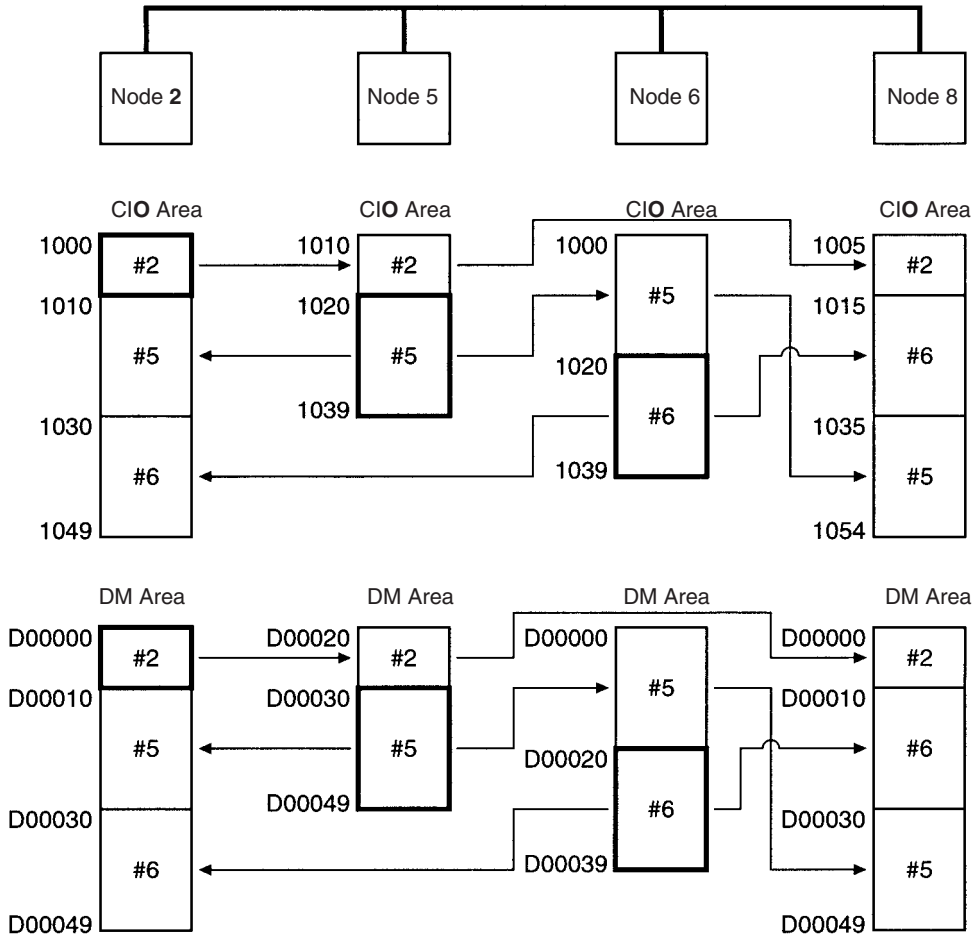

Note The send area for node 8 has specified 0 for both the CIO Area and DM Area in the common link parameters.

Only nodes with refresh parameters will participate in the data links.

Although the node order in the manual settings can be changed as you wish, the Data Link Area must be created in continuous areas.

Creating Two or More Data Link Groups in One Network

The common link parameters are the same for each network. Consequently, multiple data link groups cannot be created in a SYSMAC LINK Network. Virtual data link groups, however, can be created using the refresh parameters.

As shown below, if you divide the groups and set the send and receive words for the nodes within each group, you can set multiple data link groups, as shown in the following diagram.

It is still necessary to set the total data link words for group 1 and group 2 to within the maximum number of link words (2,966 words).

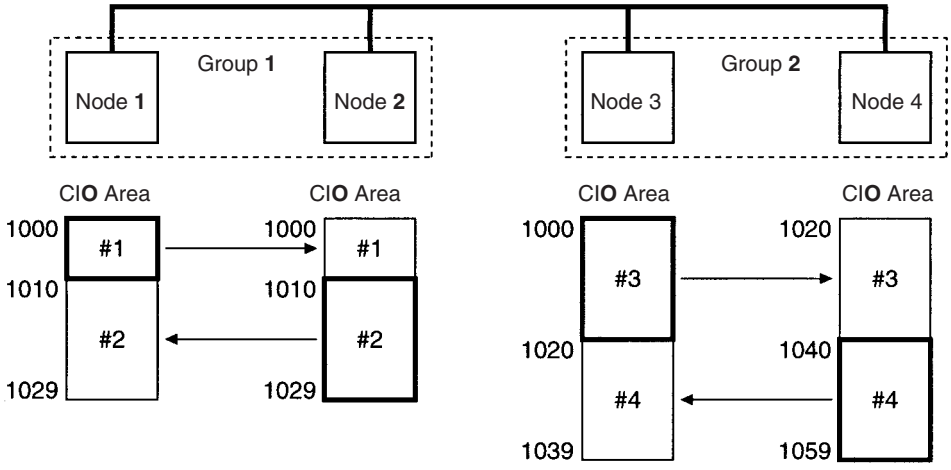

4-6-3 Refreshing Data Links with Automatic Settings

Data link refreshing with automatic settings is carried out for all nodes in the data link areas that have been specified.

In the following example, only nodes 2, 4, 5, and 6 are participating in the data links. Nodes 1, 3, 7, and 8, however, will also be refreshed and words for them cannot be used for other applications. If no data is received, nodes 1, 3, 7, and 8 are refreshed with 0.

System Configuration

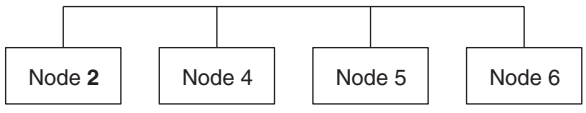

Refreshing for the above setup will be as shown below:

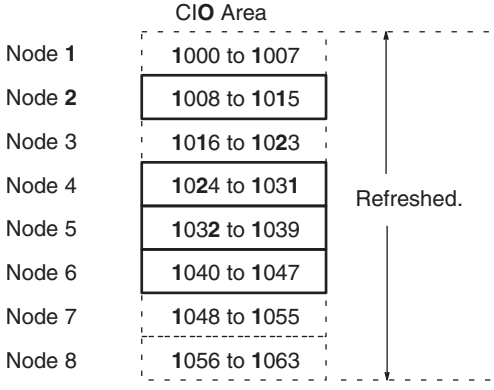

Note When using the SYSMAC LINK Units listed below, the node areas outside of the node address allocated the lowest word addresses (node 2 in the above example) and the node allocated the highest word addresses (node 6 in the above example) are not refreshed (nodes 1, 7, and 8 in the above example), and can be used for other applications in the CPU Unit of these SYSMAC LINK Units.

- CVM1/CV-series SYSMAC LINK Unit (CV500-SLK11/21)
- C200HX/HG/HE SYSMAC LINK Unit (C200HW-SLK13/14/23/24)

- C1000H/C200HF/C2000H SYSMAC LINK Unit (C1000H-SLK11/21-V1)

4-6-4 Refreshing Data Links with Manual Settings

When manual settings have been made, data link areas will be refreshed for all nodes specified in the refresh parameters.

In the following example, only nodes 3, 4, 6, and 7 are participating in the data links. Nodes 1, 2, 5, and 8, however, will also be refreshed and words for them cannot be used for other applications. If no data is received, nodes 1, 2, 5, and 8 are refreshed with 0.

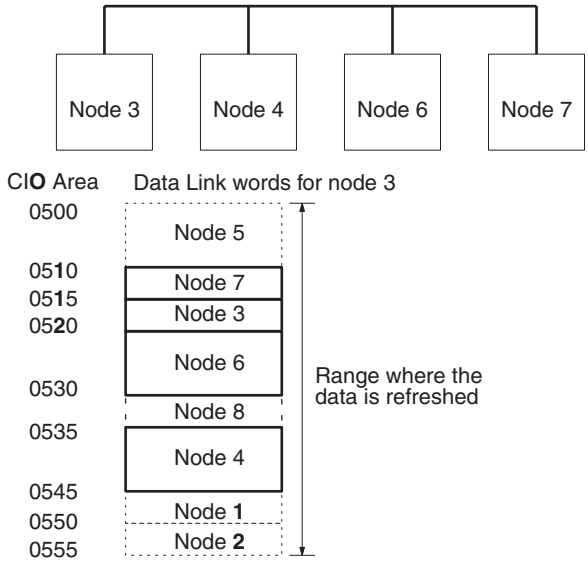

Note When using the SYSMAC LINK Units listed below, the node areas outside of the node allocated the lowest word addresses (node 7 in the above example) and the node allocated the highest word addresses (node 4 in the above example) are not refreshed (nodes 1, 2, and 5 in the above example), and can be used for other applications in the CPU Unit of these SYSMAC LINK Units.

- CVM1/CV-series SYSMAC LINK Unit (CV500-SLK11/21)
- C200HX/HG/HE SYSMAC LINK Unit (C200HW-SLK13/14/23/24)
- C1000H/C1000HF/C2000H SYSMAC LINK Unit (C1000H-SLK11/21-V1)

4-7 Data Link Table Example

In this example, the refresh parameters differ from node to node, so the data link tables will also differ from node to node. There are four nodes in the network (2, 5, 6, and 8), but some nodes will not receive data from all other nodes. The settings for the common link and refresh parameters are shown after the data flow.

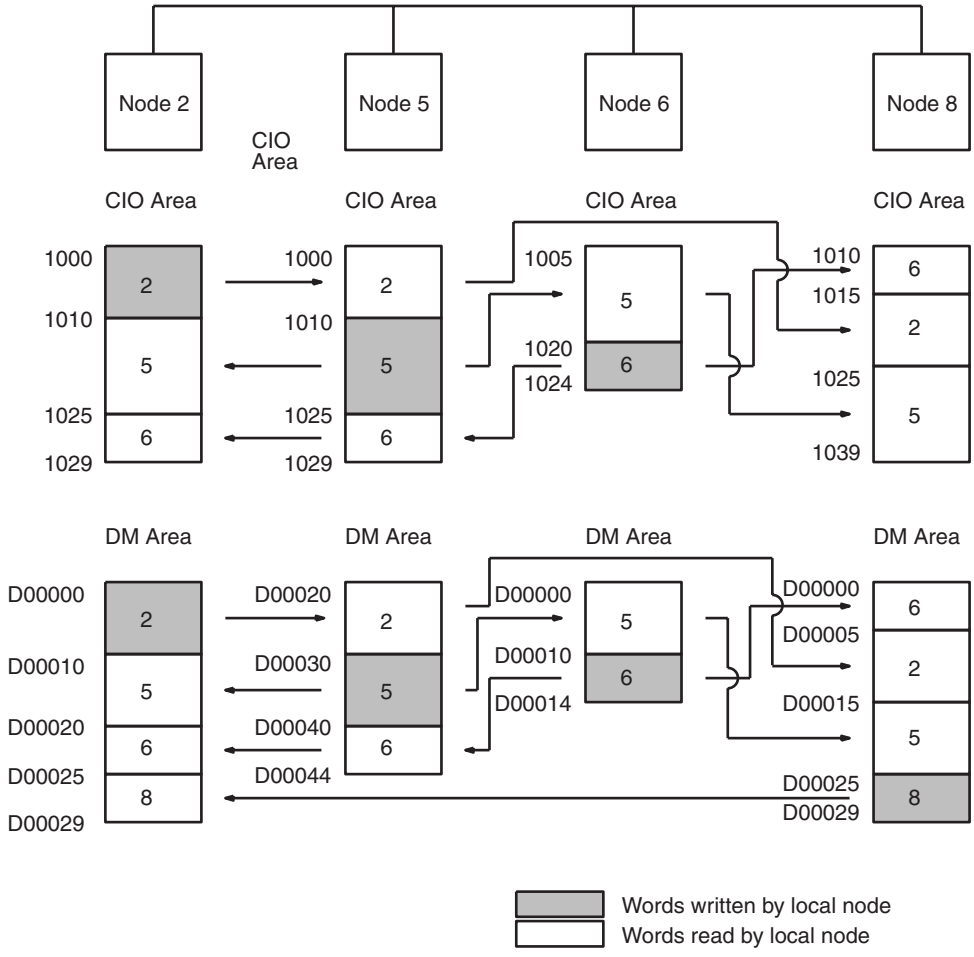

In this example, node 5 does not receive data from node 8, and node 6 does not receive data from node 2. Also, node 8 only receives CIO Area data from the other nodes

Create the data link tables for each participating node using CX-Net in CX-Programmer. The following settings are required.

- Local node send size
- PLC type
- Local node data link start address
- Refresh node order

Example of Node 2 Settings

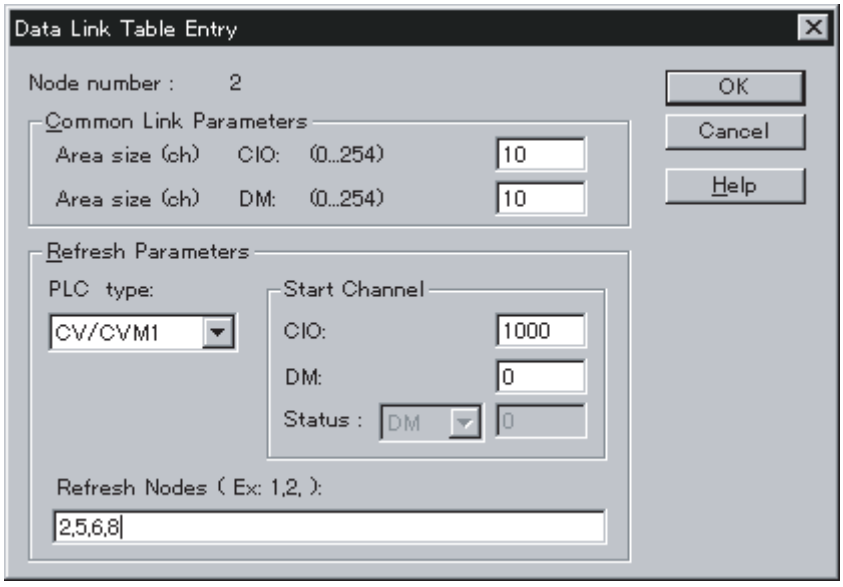

Node 2 Table

Item			Setting
Node address			Local node address: 2
Common link parameters	Number of words in CIO Area		CIO Area local node send size: 10 words
	Number of words in DM Area		DM Area local node send size: 10 words
Refresh parameters	PLC type		Select “CV/CVM1”
	Start word	CIO	CIO Area local node data link start address: CIO 1000
		DM	DM Area local node data link start address: D00000
	Refresh nodes		Node refresh order: 2, 5, 6, 8 Node addresses are listed in order with the starting node address first. Because here the local node is listed first, node 2 will first send data and then received data in order from nodes 5, 6, and 8.

Note When setting data link tables for CS-series SYSMAC LINK Units with CX-Programmer Ver. 1.2 (Service Pack 1), set the PLC type to CV/CVM1. With CX-Programmer Ver. 2.0 or later, it is possible to set a CS-series PLC type.

Setting Tables for Other Nodes

Node 5 Table

Item		Setting
Node address		Local node address: 5
Common link parameters	Number of words in CIO Area	CIO Area local node send size: 15 words
	Number of words in DM Area	DM Area local node send size: 10 words

Item			Setting
Refresh parameters	PLC type		Select “CV/CVM1”
	Start word	CIO	CIO Area local node data link start address: CIO 1000
		DM	DM Area local node data link start address: D00020
	Refresh nodes		Node refresh order: 2, 5, 6

Node 6 Table

Item			Setting
Node address			Local node address: 6
Common link parameters	Number of words in CIO Area		CIO Area local node send size: 5 words
	Number of words in DM Area		DM Area local node send size: 5 words
Refresh parameters	PLC type		Select “CV/CVM1”
	Start word	CIO	CIO Area local node data link start address: CIO 1005
		DM	DM Area local node data link start address: D00000
	Refresh nodes		Node refresh order: 5, 6

Node 8 Table

Item			Setting
Node address			Local node address: 8
Common link parameters	Number of words in CIO Area		CIO Area local node send size: 0 words (nothing set)
	Number of words in DM Area		DM Area local node send size: 5 words
Refresh parameters	PLC type		Select “CV/CVM1”
	Start word	CIO	CIO Area local node data link start address: CIO 1010
		DM	DM Area local node data link start address: D00000
	Refresh nodes		Node refresh order: 6, 2, 5, 8

4-8 Controlling Data Links

It is necessary to start the data links after finishing the data link settings. Starting the data links is carried out by any one of the following three startup operations. This is true for both manual settings and automatic settings.

- From the DM parameter software switches
- By sending a command
- By using the Support Software

Note

(1) The data link mode (manual settings or automatic settings) and the data link system are determined by the data link settings for the startup node.

(2) Be sure to set the data link mode (manual settings) and the data link table in the DM parameter area of the startup node when using manual settings.

(3) Be sure to set the data link mode (automatic settings) and the number of data link words in the DM parameter area of the startup node when using automatic settings.

(4) The data links will not operate unless the settings are correct.

⚠ **Caution** Check the following before starting the data links. If the data link table settings or the DM parameter settings are unsuitable, there is a risk of injury due to unanticipated operation of the system.

(a) Manual settings: Check that suitable data link tables have been set in each data link node. Check that data link tables have been deleted for nodes not participating in the data links.

(b) Automatic settings: Check that suitable DM parameters have been set in the data link startup node.

⚠ **Caution** Even if the data link table settings or the DM parameter settings are suitable, check that there will be no adverse effects on the controlled equipment before starting or stopping the data links.

4-8-1 DM Parameter Area Software Switches

To start the data links, turn ON the Data Link Start/Stop Bit in DM parameter area in the CPU Unit of the node you wish to use as the startup node.

To stop the data links, turn OFF Data Link Start/Stop Bit in DM parameter area in the CPU Unit of a node participating in the data links.

The Data Link Start/Stop Bit can be turned ON and OFF using the user program, Support Software, or a Programming Console (refer to *4-4-3 Data Link Start/Stop Bit*).

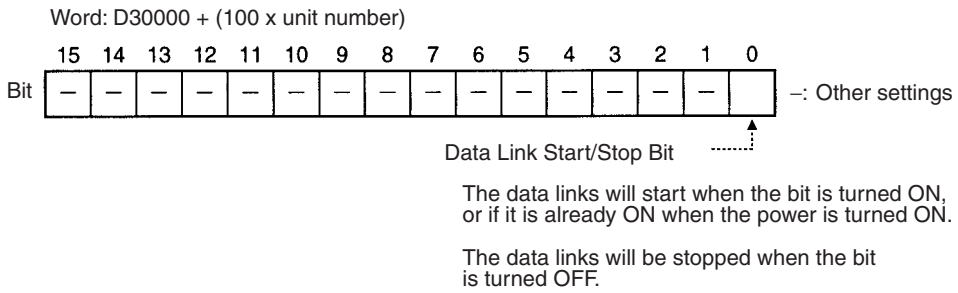

Refer to Section *4-12 CX-Programmer Procedures* or *CX-Programmer Operation Manual* for actual procedures.

4-8-2 DATA LINK START/HALT Commands

Data links can be started by sending a DATA LINK START command from a host computer or by executing the CMND(490) instruction to send the command from a PLC to the node you wish to use as the startup node.

Data links can be stopped by sending a DATA LINK HALT command from a host computer or by executing the CMND(490) instruction to send the command from a PLC to a node participating in the data links.

Note Refer to *6-4-1 DATA LINK START* and *6-4-2 DATA LINK HALT* for details.

4-8-3 CX-Net in CX-Programmer

The data link can be started or stopped from the Support Software. Refer to *CX-Programmer Operation Manual* for details.

4-9 Data Link Status

The status of the local node and the nodes in the data links can be checked from the data link status area in the words allocated to the SYSMAC LINK Unit as a CPU Bus Unit.

4-9-1 Data Link Status

The following status is indicated through the ON/OFF status of each bit. Refer to *Word Configuration* later in this section for specific allocations.

Item		Bits	Contents
Node status	CPU Unit Operating Flag	0, 4, 8, 12	ON if the CPU Unit of the node is operating (RUN or MONITOR mode). OFF if the CPU Unit of the node is in PROGRAM mode. • This flag is invalid if the Data Link Communications Error Flag for the node is ON. • If a fatal error (including an FALS instruction) occurs during operation, this flag will remain ON. • When using this flag in programming, take an AND of NO conditions of it and the local node's Data Link Active Flag.
	CPU Unit Error Flag	1, 5, 9, 13	ON if there is a fatal error in the CPU Unit of the node. OFF when the CPU Unit of the node is operating normally. • This flag is invalid if the Data Link Communications Error Flag for the node is ON. • When using this flag in programming, take an AND of NO conditions of it and the local node's Data Link Active Flag.
	Data Link Communications Error Flag	2, 6, 10, 14	ON if the node has a communications error and is not participating in the network (if the designated node is not sending data link data, communications from that node are assumed to be in error). OFF when the CPU Unit for the node is operating normally (data link data is being sent continuously from the node). • To check participation of a node in the data links, take an AND of a NO condition of this flag and a NC condition of the Data Link Active Flag.
	Data Link Active Flag	3, 7, 11, 15	ON if the node has participated in the data links, even if only once. OFF if the node has not yet participated in the data links. • This bit turns ON once the node has participated in the data link, and remains ON even if the node is no longer participating (used to check system startup). Consequently, this flag cannot be used to check the current participation status of a node in the data links. • When using this flag in programming, take an AND of NO conditions of it and the local node's Data Link Active Flag.
Local node status	Local Node Data Link Active Flag	Bit 15 of first allocated data link + 23 words	ON if the node is participating in the data links. OFF if the node is not participating in the data links. • If this flag is OFF, local communications will not be operating normally, so there is no guarantee that the status of other flags will be correct. Consequently, be sure to use this flag with an AND condition to check the status of other flags.
Network status	Startup Node Address	Bits 8 to 13 of first allocated data link word + 23	Startup node addresses 1 to 62 are stored as 1 to 3E Hex.

Note (1) The Data Link Active Flag is for checking the data link system. It is not designed to check for data link errors. To check for data link errors, use the Data Link Communications Error Flag.

(2) The CPU Unit Run Flag, CPU Unit Error Flag, Data Link Communications Error Flag, and Data Link Active Flag are valid only if the Local Node Data Link Active Flag is ON. Be sure to use the Local Node Data Link Active Flag with an AND condition when using any of these flags in programming.

Program Example

Checking Data Link Participation Status

To check participation of any one node in the data links, take an AND of a NO condition of the Local Node Data Link Active Flag and the Communications Error Flag for each node as shown below.

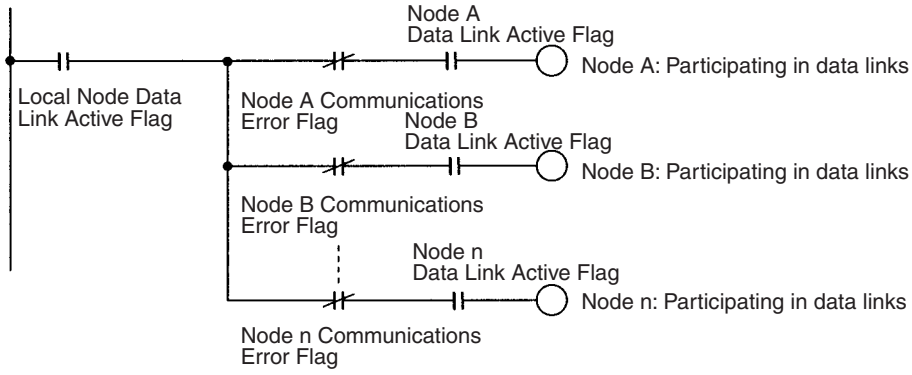

Checking for Data Link Errors in any Node

To check for an error in any node in the data links, take an OR of a NC condition of the Local Node Data Link Active Flag and the Communications Error Flags for all nodes.

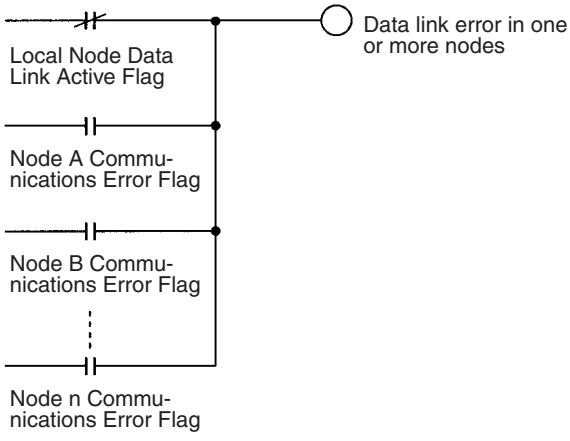

Outputting Local Node Errors

The following example program section shows one way to output and error signal when data links stop for the local node.

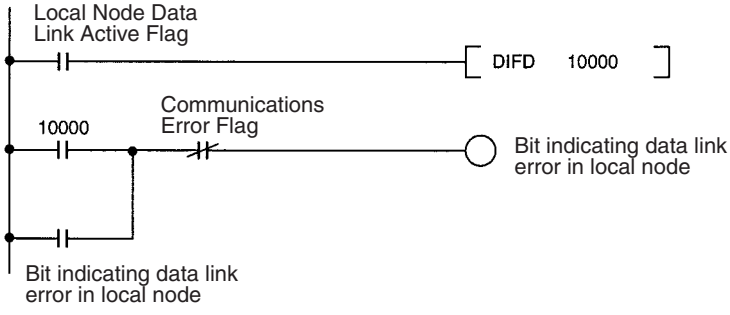

4-9-2 Word Structure

The following table shows the data link status in memory. The numbers within the table are in order of the nodes are set in the data link table (refresh parameters). These will correspond to the node addresses when using automatic settings.

The data link status area corresponds to the first word of the words allocated to the SYSMAC LINK Unit as a CPU Bus Unit +8 to +23.

Word: CIO 1500 + (25 x unit number) +8 to +23.

Word	Bits 00 to 03	Bits 04 to 07	Bits 08 to 11	Bits 12 to 15
m+8	Link No. 1	Link No. 2	Link No. 3	Link No. 4
m+9	Link No. 5	Link No. 6	Link No. 7	Link No. 8
m+10	Link No. 9	Link No. 10	Link No. 11	Link No. 12
m+11	Link No. 13	Link No. 14	Link No. 15	Link No. 16
m+12	Link No. 17	Link No. 18	Link No. 19	Link No. 20
m+13	Link No. 21	Link No. 22	Link No. 23	Link No. 24
m+14	Link No. 25	Link No. 26	Link No. 27	Link No. 28
m+15	Link No. 29	Link No. 30	Link No. 31	Link No. 32
m+16	Link No. 33	Link No. 34	Link No. 35	Link No. 36
m+17	Link No. 37	Link No. 38	Link No. 39	Link No. 40
m+18	Link No. 41	Link No. 42	Link No. 43	Link No. 44
m+19	Link No. 45	Link No. 46	Link No. 47	Link No. 48
m+20	Link No. 49	Link No. 50	Link No. 51	Link No. 52
m+21	Link No. 53	Link No. 54	Link No. 55	Link No. 56
m+22	Link No. 57	Link No. 58	Link No. 59	Link No. 60
m+23	Link No. 61	Link No. 62	Bits 08 to 13: Address of startup node (01 to 3E Hex) Bit 15: Local Data Link Active Flag (ON: data link active; OFF: data link inactive)	

The status of the bits allocated to each node is as follows:
Bit 00, 04, 08, or 12: CPU Unit Operating Flag
Bit 01, 05, 09, or 13: CPU Unit Error Flag
Bit 02, 06, 10, or 14: Data Link Communications Error Flag
Bit 03, 07, 11, or 15: Data Link Active Flag

The actual words allocated to each node address for data link status are shown in the following table.

Unit No.	Words	Unit No.	Words
0	CIO 1508 to CIO 1523	8	CIO 1708 to CIO 1723
1	CIO 1533 to CIO 1548	9	CIO 1733 to CIO 1748
2	CIO 1558 to CIO 1573	10	CIO 1758 to CIO 1773
3	CIO 1583 to CIO 1598	11	CIO 1783 to CIO 1798
4	CIO 1608 to CIO 1623	12	CIO 1808 to CIO 1823
5	CIO 1633 to CIO 1648	13	CIO 1833 to CIO 1848
6	CIO 1658 to CIO 1673	14	CIO 1858 to CIO 1873
7	CIO 1683 to CIO 1698	15	CIO 1883 to CIO 1898

If the Local Node Data Link Active Flag (bit 15 of first word +23) is OFF, the data link status will be maintained as it was immediately before operation stopped. This may not be the same as the actual current status. When using

the data link status, first check that the Local Node Data Link Active Flag is ON.

4-10 Data Link Precautions

Be sure to consider the precautions listed below when activating a data link or adding a node to an existing data link.

Setup and Activation

Be sure to consider the precautions listed below when setting up and activating a data link.

1,2,3...

1. Refresh parameters must be set for each node in the data link when manually generating data link tables. When a data link is started in a node that does not have a data link table, a data link table error will occur and the LNK indicator on that node will flash.

   Refresh parameters must be set for all nodes that are included in the common link parameters in the startup node.
2. When data links are automatically generated, the node addresses of all the nodes in the data link must be in the range resulting from the Communication Unit Settings.

   For example, if the settings divide the data link area among nodes number 1 to 4 (16 CIO words and 32 DM words), node 5 cannot participate in the data link.
3. With manual generation of data link tables, the node address of the local node must be included in the local refresh parameters.
4. If the beginning CIO or DM word in the refresh parameters is set too large, the CIO or DM Area will be exceeded during automatic allocation of link words.

   If the data area is exceeded in the startup node, the LNK indicator on the startup node will flash and the data link will not operate. If the data area is exceeded in another node, the LNK indicator on that node will flash and it will not participate in the data link.
5. If the communications cycle time in data link tables is not generated automatically, and the setting for communications cycle time is too short, the CS-series SYSMAC LINK Unit (CS1W-SLK11/21) will not participate in the data links. The LNK indicator on the Unit will flash quickly, and a data link table communications cycle time settings error (021D Hex) will be registered in the error log. If this CS-series SYSMAC LINK Unit is the startup node for the data link, the data link will not be activated. The minimum possible communications cycle time setting can be obtained using the following calculation:

   Minimum possible communications cycle time setting =
   Maximum node address × 0.01
   + Number of polled Units × 0.25
   + Number of Link Units × 0.161
   + Total number of words in link area × 0.01
   + 5.322 (ms)

   Round up the result of this calculation to obtain a value in milliseconds.

The data link table communications cycle time setting error registered in the error log will contain the following information:

Error code	Detail code	
	1st byte	2nd byte
021D Hex	Communications cycle time set in the data link status (Unit: ms, 2-digit hexadecimal)	Minimum possible communications cycle time setting (Unit: ms, 2-digit hexadecimal)

The value in the 2nd byte of the detail code for 021D registered in the error history will be the minimum possible communications cycle time setting. For example, if the communications cycle time is set to 5 ms, and the LNK indicator starts flashing quickly, an error code of “021D 0512” will indicate that the minimum possible communications cycle time setting is 18 ms (12 Hex).

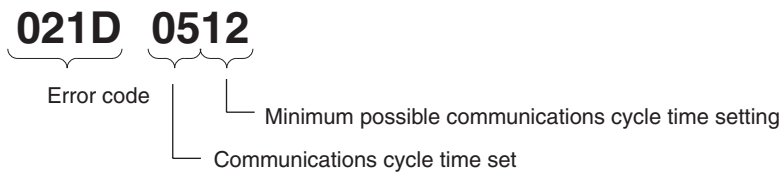

Adding Nodes

Be sure to consider the precautions listed below when adding a node to active data links.

1,2,3...

1. The node address of the node being added must be in the common link parameters of the data links.
2. Set data link tables in the node being added. This is not necessary, however, when using automatic settings with the startup node, although it is necessary to include the node being added in the table of nodes participating in the data link in the automatic settings.
3. The common link parameters for the node being added must be the same as for the common link parameters already in operation. If the common link parameters for the node being added are different from the common link parameters already in operation, the node being added cannot participate in the data link. Refer to the example below.
4. If the communications cycle time for the data link tables is manually set when a CS-series SYSMAC LINK Unit is to be added to the data links, make sure that the value set is not below the minimum possible communications cycle time setting. For details of the values that can be set, refer to the previous section, *Setup and Activation*.

Adding a Node to a Data Link

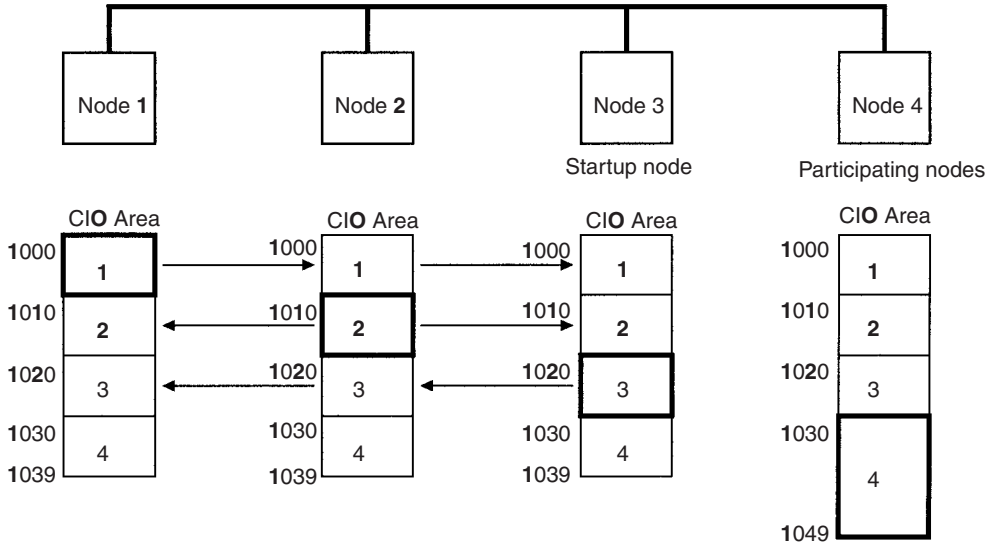

The number of send words for node 4 is set as 20 words in the common link parameters, but the number of send words is set as 10 words in the common link parameters for other nodes that are already operating. Consequently, node 4 will not participate in the data link network.

4-11 Data Link Characteristics

4-11-1 Data Link Communications Cycle Time

Data link servicing is given priority in SYSMAC LINK Systems. The communications time for a data link can thus be maintained as a constant, regardless of whether or not SEND(90), RECV(98), and CMND(490) are used. Fixing the data link communications time at a constant value fixes the data link I/O response time as well.

The communications cycle time can be set either automatically (the default) or controlled externally.

Automatic Generation

When data link tables have been generated automatically, the communications time will be as follows for systems using coaxial cable:

No. of nodes	Data link areas		
	CIO and DM Areas	CIO Area only	DM Area only
2	19 ms	17 ms	18 ms
4	19 ms	17 ms	18 ms
8	19 ms	18 ms	18 ms
16	19 ms	18 ms	19 ms

The communications time will be as follows for systems using optical fiber cable:

No. of nodes	Data link areas		
	CIO and DM Areas	CIO Area only	DM Area only
2	21 ms	20 ms	21 ms
4	22 ms	20 ms	21 ms
8	22 ms	21 ms	21 ms
16	22 ms	21 ms	22 ms

Manual Generation

When data link tables have been generated manually, the communications cycle time can be set to a constant value or generated automatically.

The communications cycle time can be set as a constant from 5 to 255 ms in increments of 1 ms using the Support Software to eliminate variations caused by noise or other factors. When the communications cycle time is not set as a constant, it will be generated automatically according to the equations below. Round the result of the calculation to the nearest millisecond.

Communications cycle time (coaxial cable systems) =
Maximum node address × 0.085 ms + maximum number of frames × 0.654 ms + number of polled units × 0.75 ms + number of Link Units × 0.056 ms + total number of words × 0.01 ms + 1.322 ms

Communications cycle time (optical fiber cable systems) =
maximum node address × 0.1115 ms + maximum number of frames × 0.77 ms
+ number of polled units × 0.75 ms + number of Link Units × 0.056 ms
+ total number of words × 0.010 ms + 1.322 ms

Note The present and maximum values of the communications cycle time can be monitored from the Support Software.

Example Calculations

The examples below calculate the communications cycle time for both coaxial and optical fiber cable with the following characteristics:

Maximum node address: 62
Maximum number of frames: . . . 10
Number of polled units: 4
Number of Link Units 32
Total number of words 2,000

Communications cycle time (coaxial cable systems) =
62 × 0.085 ms + 10 × 0.654 ms + 4 × 0.75 ms + 32 × 0.056 ms + 2000 × 0.01 ms + 1.322 ms
= 37.924 ms (38 ms after rounding)

Communications cycle time (optical fiber cable systems) =
62 × 0.1115 ms + 10 × 0.77 ms + 4 × 0.75 ms + 32 × 0.056 ms + 2000 × 0.01 ms + 1.322 ms
= 40.727 ms (41 ms after rounding)

Note Data links might not operate correctly if the communications cycle time is set to a value shorter than that generated automatically by the system. If the LNK indicator on the front of a CS-series SYSMAC LINK Unit (CS1W-SLK11/12) flashes quickly (at approximately 100-ms intervals), either automatically set the communications cycle time for the data link table, or manually set the communications cycle time to a longer value.

Changing the Communications Cycle Time

When the communications cycle time is generated automatically, it can be changed by changing the other network parameters on the Support Software. The default values and setting ranges of the other network parameters are shown in the table below.

Network parameter	Default value	Setting range
Maximum node address	62	2 to 62
Number of polled units	4	1 to 62
Maximum number of frames	10	5 to 255

Use the following formulas to calculate the change in the communications cycle time that results from a change in other network parameters. A positive

result indicates the communications cycle time has been decreased and a negative result indicates it has been increased. Round the result of the calculation to the nearest millisecond.

Change of the communications cycle time (coaxial cable systems) =
(old maximum node address - new maximum) × 0.085 ms
+ (old maximum number of frames - new maximum) × 0.654 ms
+ (old number of polled units - new number) × 0.750 ms

Change of the communications cycle time (optical fiber cable systems) =
(old maximum node address - new maximum) × 0.1115 ms
+ (old maximum number of frames - new maximum) × 0.77 ms
+ (old number of polled units - new number) × 0.75 ms

Example Calculations

The examples below calculate the change of the communications cycle time for both coaxial and optical fiber cable when the other network parameters are changed as shown below:

Maximum node address: . . . . . .Changed from 62 to 16
Maximum number of frames: . . .Changed from 10 to 13
Number of polled units: . . . . . .Changed from 4 to 5

Change of the communications cycle time (coaxial cable systems) =
(62 – 16) × 0.085 ms + (10 – 13) × 0.654 ms + (4 – 5) × 0.75 ms =
1.198 ms (1 ms after rounding)

Change of the communications cycle time (optical fiber cable systems) =
(62 – 16) × 0.1115 ms + (10 – 13) × 0.77 ms + (4 – 5) × 0.75 ms =
2.069 ms (2 ms after rounding)

Note

(1) If the maximum node address is set to a value less than the node address of any nodes in the data link, those nodes will no longer be part of the data links.

(2) If the maximum number of frames is set too low, errors might occur during the execution of operations such as SEND(90), RECV(98), and CMND(490) instructions, internode echo tests, and remote monitoring.

(3) Lowering the number of polled units will increase the delay between resetting a Unit or turning on its PLC's power and its entrance into the network.

4-11-2 Data Exchange Timing

This section explains data link timing when using data links between SYSMAC LINK Units and a CPU Unit.

With a CS-series PLC, data exchange with the SYSMAC LINK Unit is performed by interrupt processing during the peripheral servicing time in the CPU Unit cycle time. Data exchange timing is as follows:

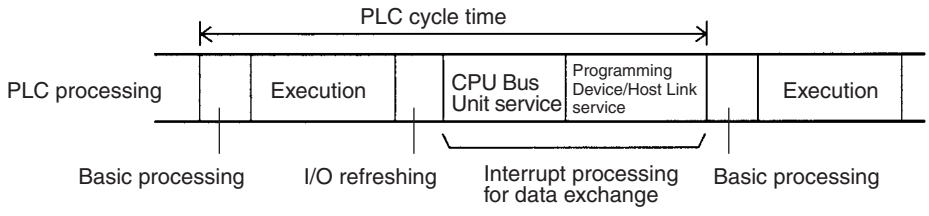

If interrupt processing for data exchange is executed, the PLC cycle time will be lengthened by the time required for the interrupt processing.

Data Processing Time

The time required for interrupt processing for data exchange (data processing time) can be roughly estimated as shown in the following table.

Data link scale	Equation for estimating data processing time
Data link is established for both areas 1 and 2	0.001 × Total number of data link words + 1.7 (ms)
Data link is established for only area 1 or area 2	0.001 × Total number of data link words + 1.4 (ms)

4-11-3 Calculation Examples for Data Link I/O Response Times

In a SYSMAC LINK Unit data link, there is a slight time lag between the time input is received at one node in the link and the time output is made from another node in response to this input. This time lag is called the data link I/O response time. In this section, examples illustrating how to calculate the minimum and maximum I/O response times are given for the configuration shown below.

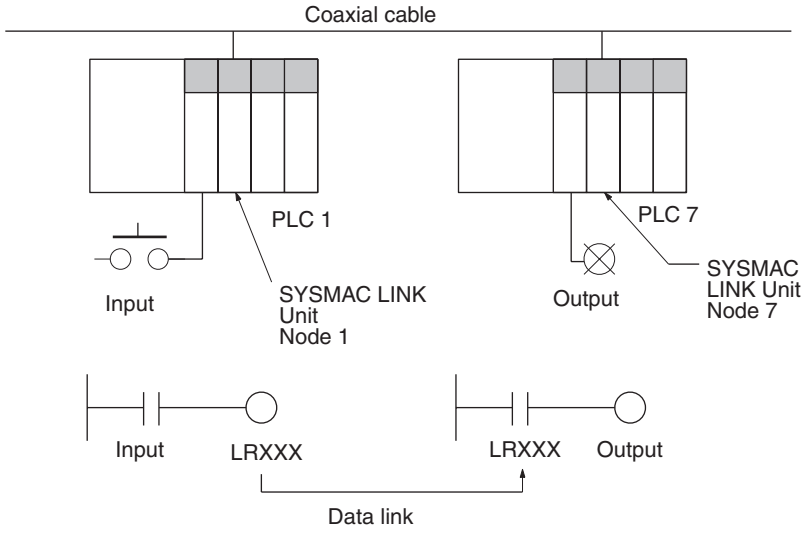

Item	Condition
Maximum node address	62
Number of polled nodes	4
Maximum number of frames	10
Number of participating nodes	8
Number of nodes participating in data links	8
Number of send words for area 1	8 words per node
Number of send words for area 2	16 words per node
Messages	None

The time required for each of the above items is given below:

Communications Cycle Time

62 × 0.085 + 10 × 0.654 + 4 × 0.75 + 8 × 0.056 + 192 × 0.01 + 1.322 = 18.5 ≈ 19 ms (For details, refer to page 62.)

Input ON Response Time

This is the time between an input signal being received and the relevant input bit actually turning ON. Taken as 0 ms (min.) to 1.5 ms (max.) in this example.

Output ON Response Time

This is the time between the relevant output bit turning ON in the CPU Unit and the output signal actually being sent. Taken to be 0 ms (min.) to 1.5 ms (max.) in this example.

Scan Time for PLC 1

Taken to be 25 ms in this example.

Scan Time for PLC 7

Taken to be 10 ms in this example.

Maximum Data Link I/O Response Time

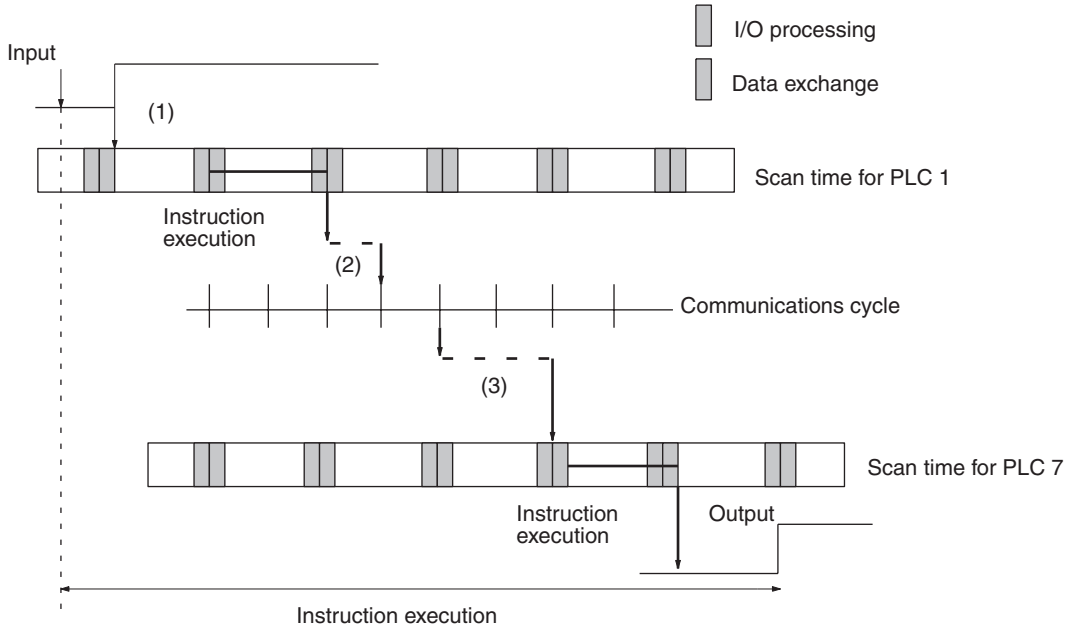

Input ON response time	1.5 ms
Scan time for PLC 1 × 2	25 ms × 2
Communications cycle time × 2	19 ms × 2
Scan time for PLC 7 × 2 (see note a) below)	10 ms × 2
Output ON response time	15 ms
Total (data link I/O response time)	124.5 ms

The following delays occur at 1, 2, and 3 in the above diagram:

1,2,3...

1. The input bit turns ON just after a scan and so the time required for one more scan elapses before the input is processed. Therefore a multiplication factor of 2 is applied to the scan time, as shown in the above table.
2. Processing for the input data is exchanged immediately after the right to transmit is transferred from PLC 1, and so the time required for communications is extended by approximately one communications cycle. Therefore a multiplication factor of 2 is applied to the communications cycle time, as shown in the above table.
3. Data is exchanged data with PLC 7 just after one scan and so the time required for one more scan elapses before output processing is performed. Therefore a multiplication factor of 2 is applied to the scan time, as shown in the above table.

Note (a) A multiplication factor of 3 (not 2) is applied to the scan time for PLC 7 if it is longer than the communications cycle time.

(b) The I/O response time will also be affected by noise and other factors.

Minimum Data Link I/O Response Time

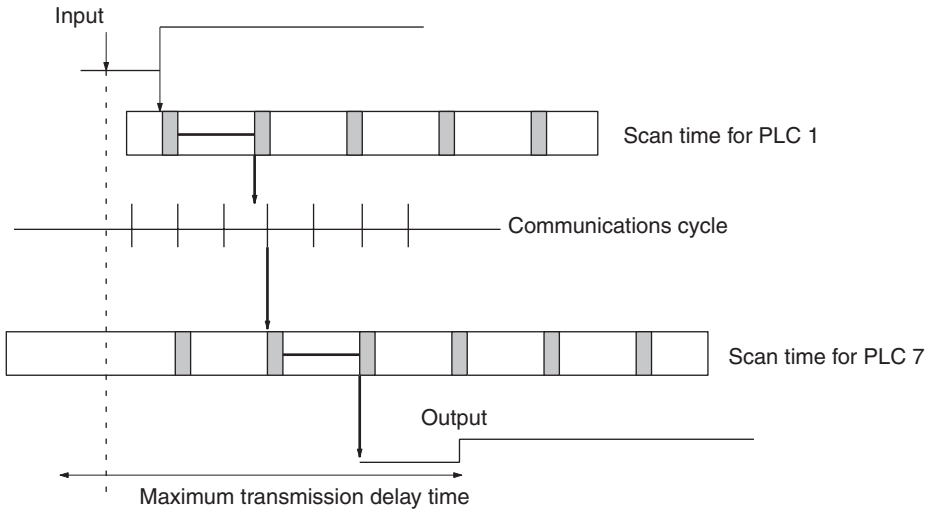

Input ON response time	---
Scan time for PLC 1	25 ms
Communications cycle time	---
Scan time for PLC 7	10 ms
Output ON response time	---
Total (data link I/O response time)	35 ms

4-12 CX-Programmer Procedures

This section describes the procedures from creation of data link tables to starting up data links using CX-Net in CX-Programmer.

Here, the procedure for CX-Net in CX-Programmer Ver. 1.2 (Service Pack 1) is given as an example. The operations, windows, and setting items may vary with the version of CX-Programmer.

4-12-1 Overall Procedure

If building SYSMAC LINK data links for the first time, make the settings using the following procedure. It is necessary to create data link tables if using manually set data links.

Note There is no need to create data link tables when using automatic settings. If using automatically set data links, set the DM parameter areas (DM area words allocated to the SYSMAC LINK Unit as a CPU Bus Unit) using a Programming Console or the PLC Memory Window in CX-Programmer.

1,2,3...

1. Start CX-Net from the CX-Programmer by selecting ***Tools*** and then ***Network Configuration Tool***.
2. Open the CX-Server file (*.CDM) in CX-Net or create a new file in CX-Net by selecting ***Project*** and then ***Open*** in CX-Net.
3. Start the Data Link Editor to create the data link tables by selecting ***Data Link*** and then ***Editor***.
   - If creating the same data link tables in all nodes, start the Data Link Engineer from the Data Link Editor by selecting ***Table*** and then ***Data Link Engineer***.
   - If creating different data link tables for each node, create data link parameters for each node by editing tables for each node individually.

4. Check the data link tables from the Data Link Editor by selecting ***Table*** and then ***Check***.
5. Save the data link tables from the Data Link Editor by selecting ***File*** and then ***Save*** or ***Save as.***
6. Connect to the network from CX-Net by selecting ***PLC*** and then ***Open***.
7. Read the data link tables and transfer them to the PLC using the Data Link Setup Dialog Box from CX-Net. Select ***Data Links*** and then ***Setup***.
8. Start the data links using the Data Link Status Dialog Box from CX-Net. Select ***Data Link*** and then ***Status***.

Note Data link tables cannot be set for the C200H-SLK21 and C1000H-SLK21. Refer to *9-3 Using the C200H-SLK21 or C1000H-SLK21* for details.

4-12-2 Data Link Settings

System Configuration

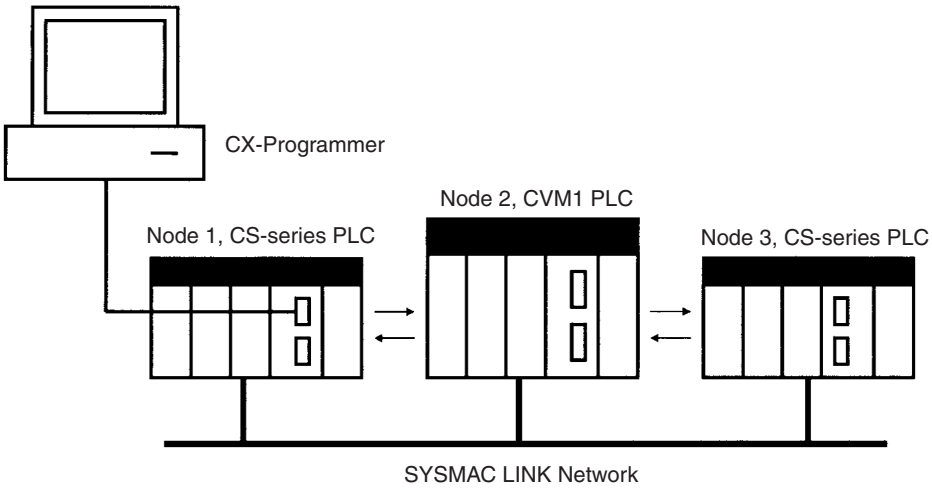

Note The network settings for the three PLCs shown above have already been saved in the CX-Server file (.CDM). For CX-Server file creation, refer to in the *CX-Programmer Operation Manual*.

Opening CX-Server Files (.CDM)

Read the CX-Server file in CX-Net using the following procedure.

1,2,3... 1. Start CX-Net from the CX-Programmer by selecting ***Tools*** and then ***Network Configuration Tool***.

2. Open the CX-Server file (*.CDM) in CX-Net or create a new file in CX-Net by selecting ***Project*** and then ***Open*** in CX-Net. In this example, Sample.cdm is used as the file name. The following dialog box will be displayed.

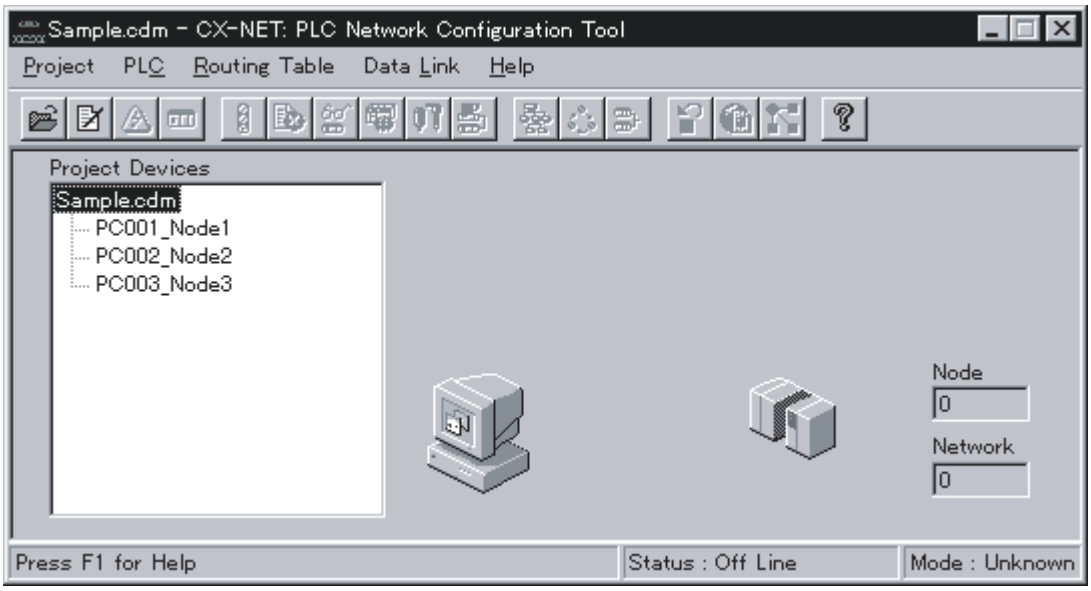

Creating Data Link Tables

Create the data link tables for each node entered in the CX-Server file. In this example, the data link tables are created automatically using the Data Link Table Engineer, then the parameters are changed manually.

Starting the Data Link Editor

1,2,3...

1. Select ***Data Link*** and then ***Editor***. A dialog box for selecting the type of data link will appear.

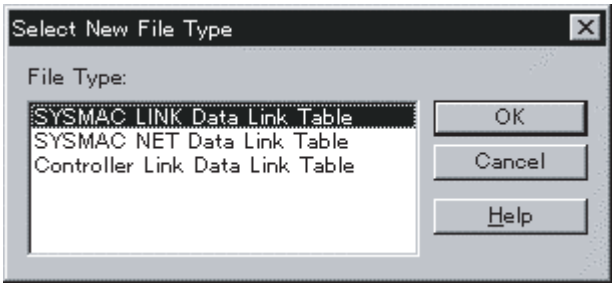

2. Select ***SYSMAC LINK Data Link Table*** and then click the **OK** button. The Data Link Editor [SYSMAC LINK] will start.

Making Manual Settings without Using the Data Link Table Engineer

You can make Manual Settings without using the Data Link Table Engineer. Create data link tables manually in the following cases.

- The send area size is different for each node participating in the data link.
- The send node order is not the same as the order of node addresses.
- There are nodes that are not receiving data.

Refer to the following example for details.

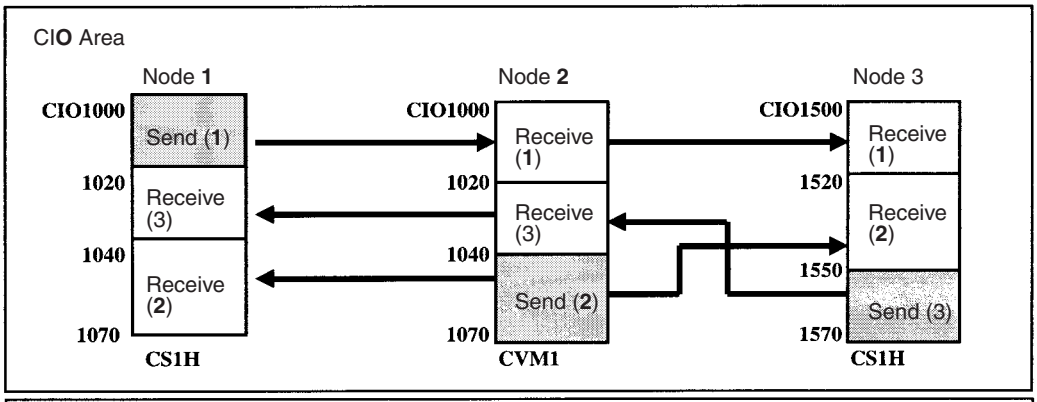

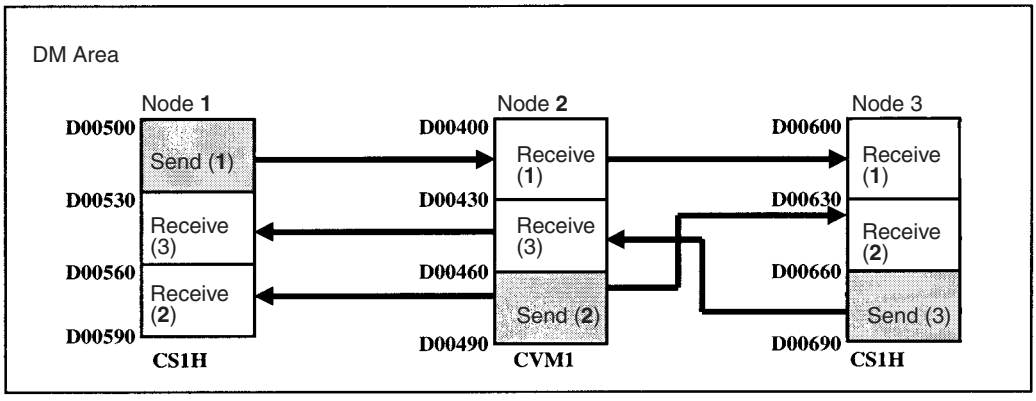

1,2,3... 1. Select ***Data Link*** and then ***Editor***. A dialog box for selecting the type of data link will appear.

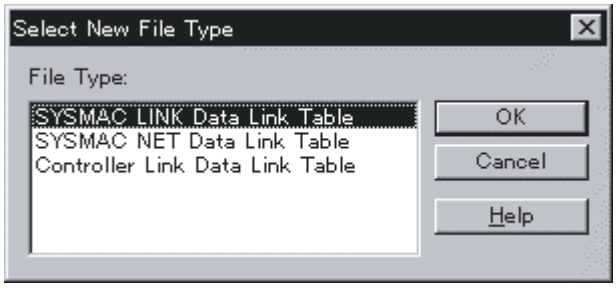

2. Select ***SYSMAC LINK Data Link Table*** and then click the **OK** button. The Data Link Editor [SYSMAC LINK] will start.

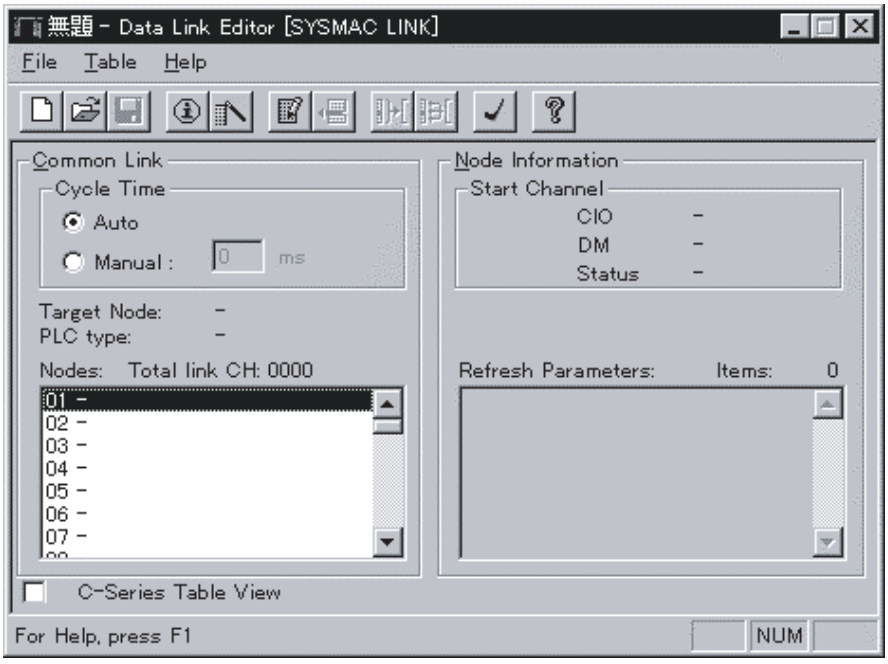

3. Set the data link communications cycle time in the Cycle Time field under *Common Link*. If you select ***Auto***, the optimum communications cycle time will be automatically calculated according to the data link tables. If you select ***Manual***, set the time manually between 5 to 255 ms (refer to *4-11 Data Link Characteristics* for communications cycle time details).
4. Double click a node address in the Nodes field, or select ***Table*** and then ***Edit Table Item***. The Data Link Table Entry Dialog Box will appear.

Note (a) If using CX-Programmer Ver. 1.2 (Service Pack 1), select CV/CVM1 for the PLC type when using a CS-series SYSMAC LINK Unit.

If a CV/CVM1 PLC is set, the manual settings words will be limited to the same words as for CVM1/CV, as follows:
CIO Area: CIO 0000 to CIO 2555
DM Area: D00000 to D24575

(b) CS-series PLC types can be specified with CX-Programmer Ver. 2.0 or later and so the above limitations to manual settings words do not apply.

Set the local node CIO Area send size in words. Setting range: 0 to 254 words. When this setting is 0, the local node will not send CIO data (i.e., will receive only).

Set the local node DM Area send size in words. Settings range: 0 to 254 words. When this setting is 0, the local node will not send DM data (i.e., will receive only).

The node address selected for editing

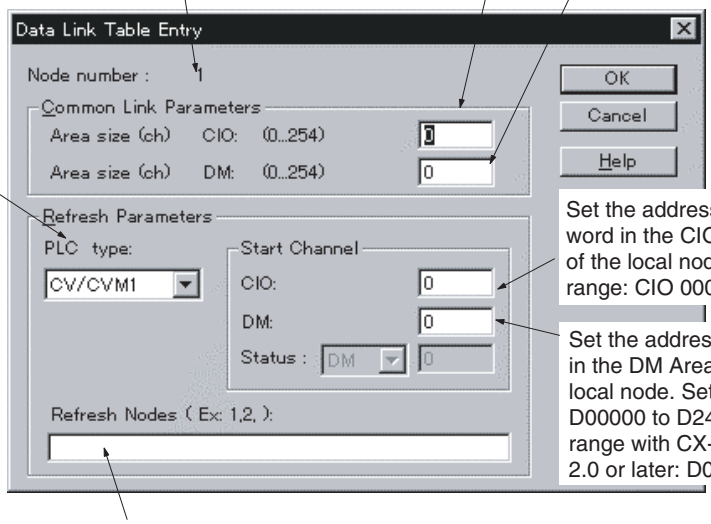

If using CX-Programmer Ver. 1.2 (Service Pack 1), select CV/CVM1 for the PLC type when using a CS-series SYSMAC LINK Unit. The words for manual settings will be limited to the same words as for CVM1 and CV-series PLCs.
If using CX-Programmer Ver. 2.0 or later, CS-series PLC types can be specified and so the above limitations to words for manual settings do not apply.

Set the address of the first word in the CIO Area data link of the local node. Setting range: CIO 0000 to CIO 2555.

Set the address of the first word in the DM Area data link of the local node. Setting range: D00000 to D24575. (Setting range with CX-Programmer Ver. 2.0 or later: D00000 to D32767.)

Set in order the node addresses with which the local node will refresh data, starting with the data link start addresses set above. If the address of the local node is set, it will send the specified word data to other nodes. If the address of another node is set, the local node will receive the data sent by that node. For example, if you enter 3, 2, 1 as the refresh order, the node addresses will be allocated in the order 3, 2, 1, starting from the start address. If the local node address is 1, it will receive data from node 3, then from node 2, and finally, it will send data itself). Always include the local node in the refresh node order. Data will not be received from the local node by another other node if the local node is not specified.

5. Enter the value in each field.
   The following example shows settings for node 1.

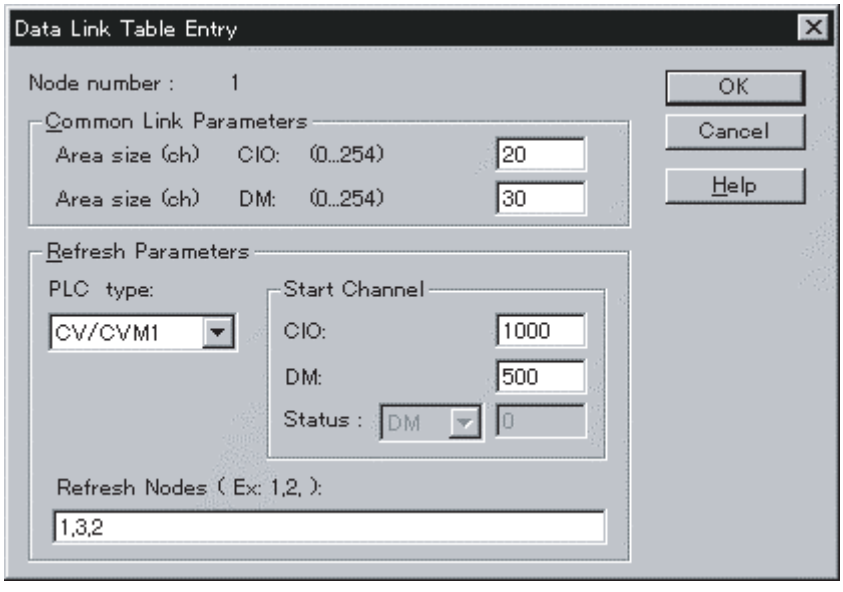

Node address			Local node address: 1
Common link parameters	CIO Area size		CIO Area local node send size: 20 words.
	DM Area size		DM Area local node send size: 30 words.
Refresh parameters	PLC type		Select “CV/CVM1”
	Start word	CIO	CIO Area local node data link start address: CIO 1000.
		DM	DM Area local node data link start address: D00500
	Refresh nodes		Node refresh order: 1, 3, 2 Node addresses are listed in order with the starting node address first. Because here the local node is listed first, node 1 will first send data and then received data in order from nodes 3 and then 2.

6. Set the settings for node 2 and 3 in the same way. The following example shows the settings for node 2.

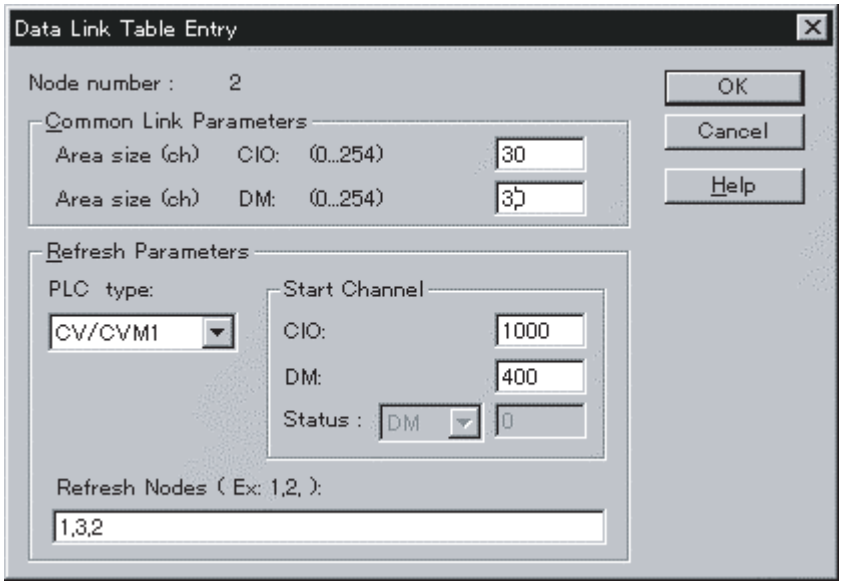

The following example shows the settings for node 3.

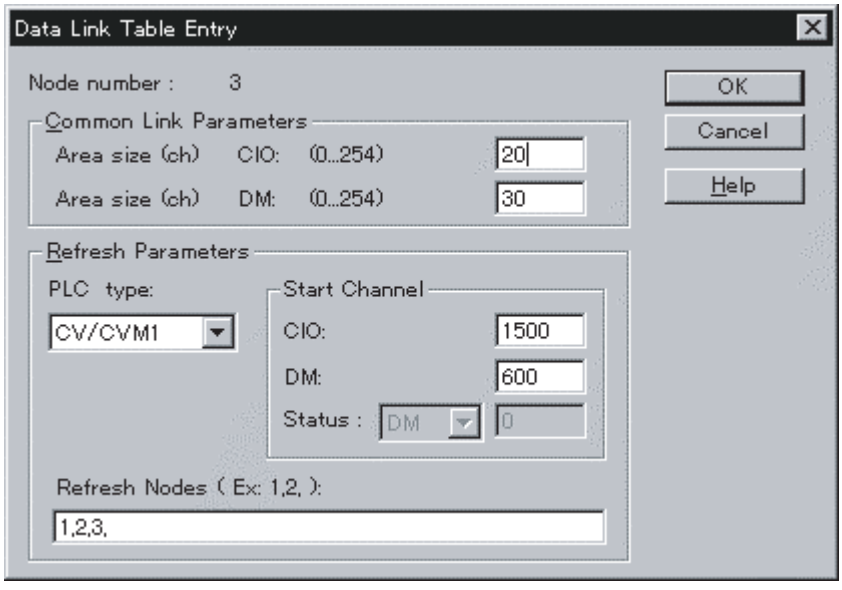

7. The following display will appear when the data link table settings have been made for all nodes. The example shows node 1 selected.

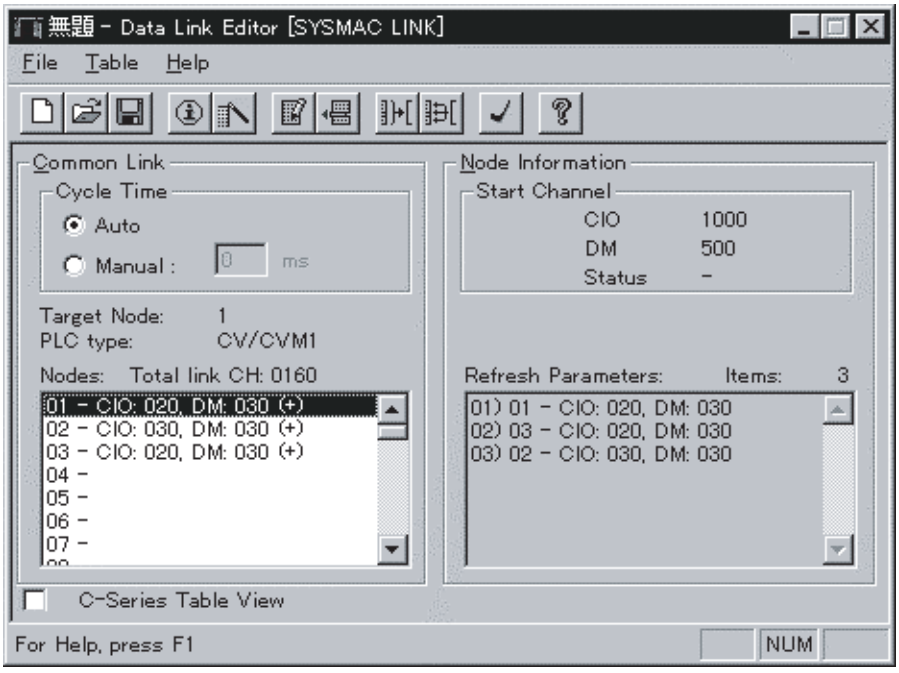

Settings and Display Contents

Item			Contents
Common Link: Common link parameters	*Cycle Time:* Communications cycle time		Data link communications cycle time: Select automatic or manual settings. Manual setting range: 5 to 255 ms.
	Target Node	*Total link CH:* Total number of link words	Displays the total number of data link words (CIO Area + DM Area). In the example, CIO 70 words + DM 90 words = 160 words.
		Nodes	The number of send words is displayed for each node. CIO: Number of CIO Area send words. DM: Number of DM Area send words. In the example, CIO: 20 send words, DM: 30 send words.
Node Information		*Start Channel:* Start words	Displays the words from which data links start in the CIO and DM Areas for the selected node. In the example, CIO 1000 and D00500 are displayed as the start addresses.
		Refresh Parameters	Displays the order in which nodes are refreshed in the second column from the left. The values on the right are the number of words received from the node in the CIO Area and DM Area. In this example, nodes are refreshed in the order 1, 3, 2.

The following example shows the display for node 2.

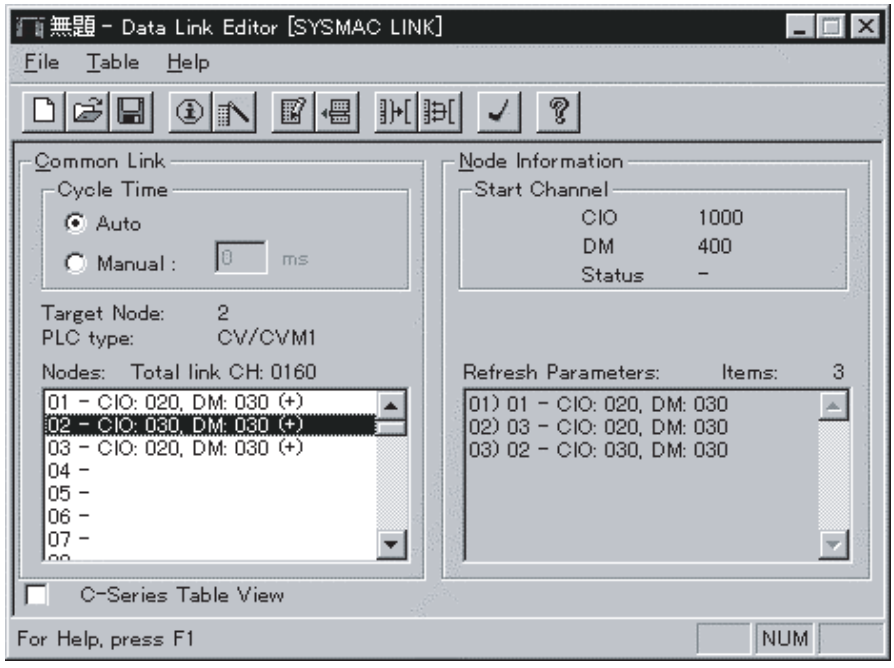

The following example shows the display for node 3.

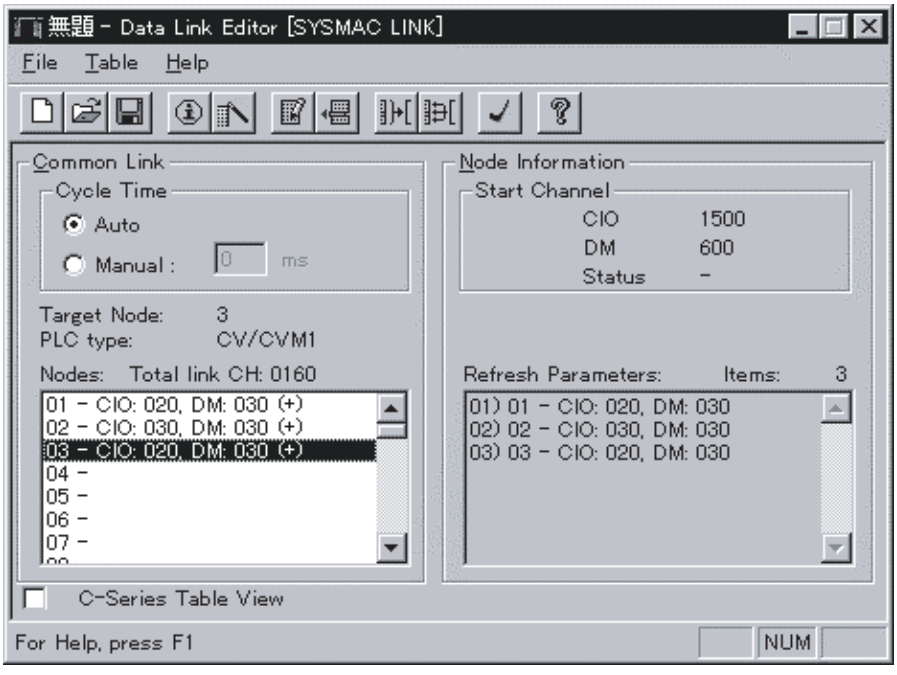

Using the Data Link Table Engineer

Use the Data Link Table Engineer if creating data link tables similar to the automatic settings. The Data Link Table Engineer will automatically create data link tables with the following conditions:

- The PLC type will be the same for all nodes participating in the data links.
- The first word containing the data link status will be the same for all nodes participating in the data links.
- The start word for data link area 1 and the start word for data link area 2 will be the same for all nodes participating in the data links.

- The send area sizes will be the same for all nodes participating in the data links.
- The send node order will be in the order of node addresses
- There will be no nodes that do not receive.

Setting Example

The following example shows the Data Link Table Engineer settings.

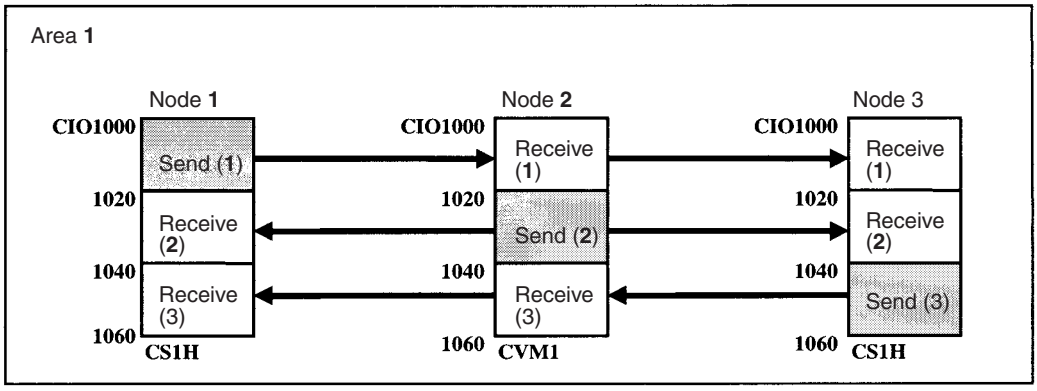

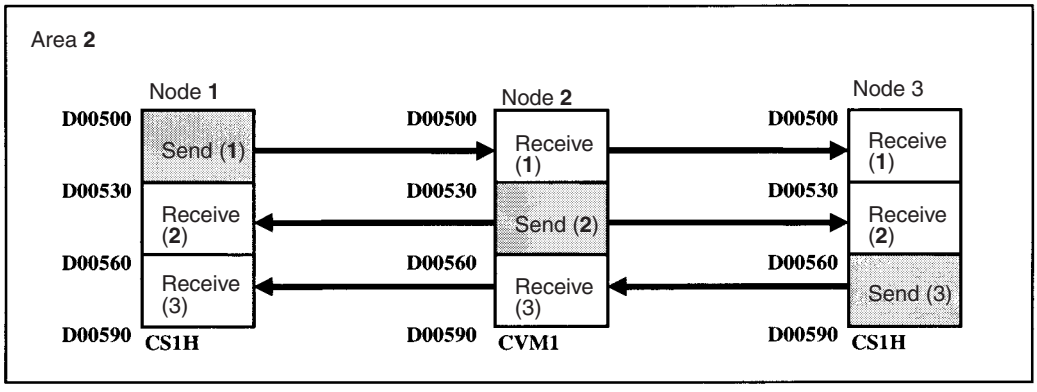

1,2,3...

1. Select ***Table*** and then ***Data Link Engineer***. The Data Link Table Engineer dialog box will be displayed, as shown below.
2. Make the following settings.
   - In the Valid Nodes Field, enter the node addresses for the automatic settings.
   - In the Common Link Parameters Field, set the send size for each node in the CIO Area and in the DM Area. All nodes must have the same send sizes.
   - Set the PLC type in the PLC Type Field under *Refresh Parameters*. Select “CV/CVM1.”
   - In the Start Channel Field, set the first words in the CIO Area and DM Area data links.

Note If using CX-Programmer Ver. 1.2 (Service Pack 1), select “CV/CVM1” for the PLC type when using a CS-series SYSMAC LINK Unit. With CX-Programmer Ver. 2.0 or later, CS-series PLC types can be specified.

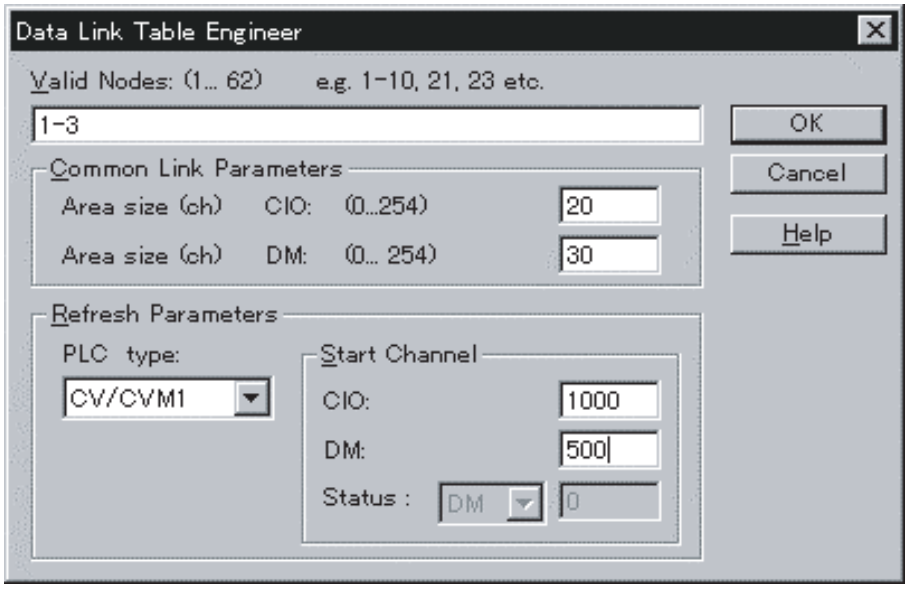

3. Click the **OK** button. As shown below, a data link table will be automatically created for all nodes in the Nodes Valid Field. All nodes will have the same start words and the same send sizes, and the refresh order set in the same order as the node addresses.

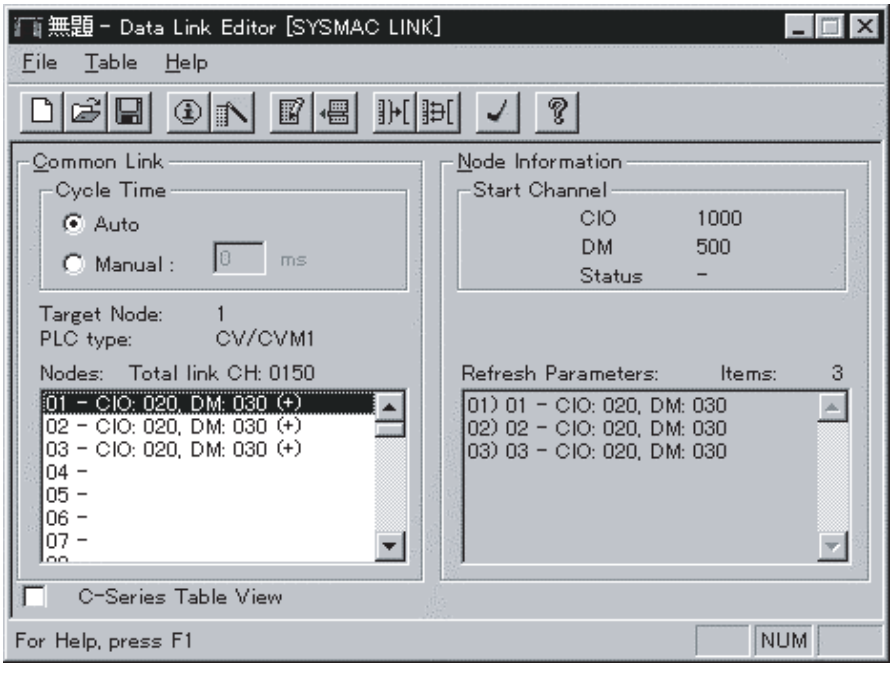

This completes the data link tables creation. Next, check and save the data link tables using the following procedures.

Checking Data Link Tables

Select ***Data Link Editor [SYSMAC LINK], Table***, and then ***Check***. The check results will be displayed as follows:

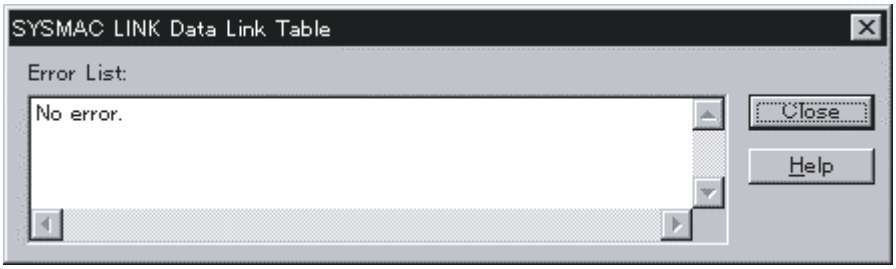

Refer to the *CX-Programmer Operation Manual* (W414) for details on error messages for the check results of data link tables.

Saving Data Link Tables

Save the data link tables. Data link tables are saved with an .sl3 extension.

1,2,3...

1. Select ***Data Link Editor SYSMAC LINK, File***, and then ***Save as***. The Save As Dialog Box will appear.
2. Enter the file name (e.g., “Sample”), specify the directory to which to save, and click the **Save** button. The file will be saved with an .sl3 extension (e.g., “Sample.sl3”).

Connecting to the Network

1,2,3...

1. Select the PLC to connect to the network from the ***PLC Network Configuration Tool*** in CX-Net.

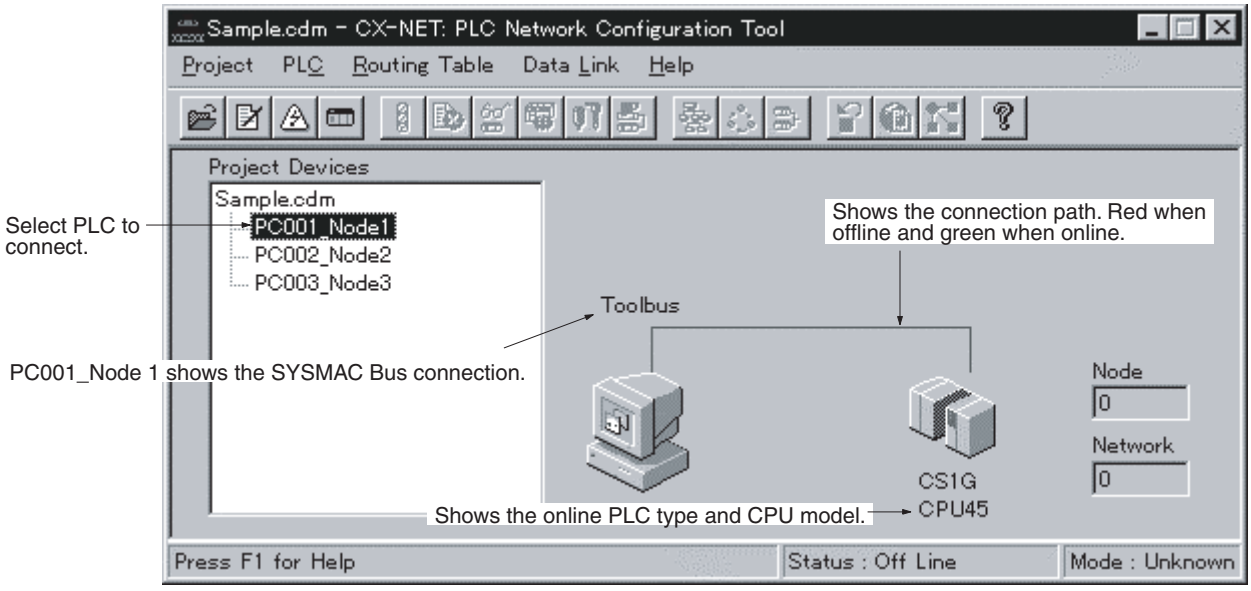

2. Select ***PLC*** and then ***Open***. When connected, the display will change as follows:

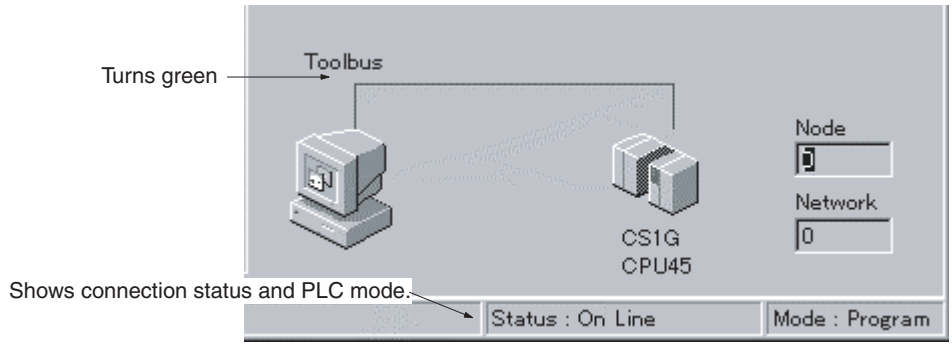

Select ***PLC*** and then ***Open*** to reconnect if disconnected.

Reading and Transferring Data Link Tables

Read the data link tables that have been created and then transfer them to all the nodes participating in the data links.

Reading Data Link Tables

1,2,3...

1. Start the CX-Net and select ***Data Link*** and then ***Setup***. If connected locally (i.e., directly to the PLC), the Data Link Setup (Local) Dialog Box will appear.

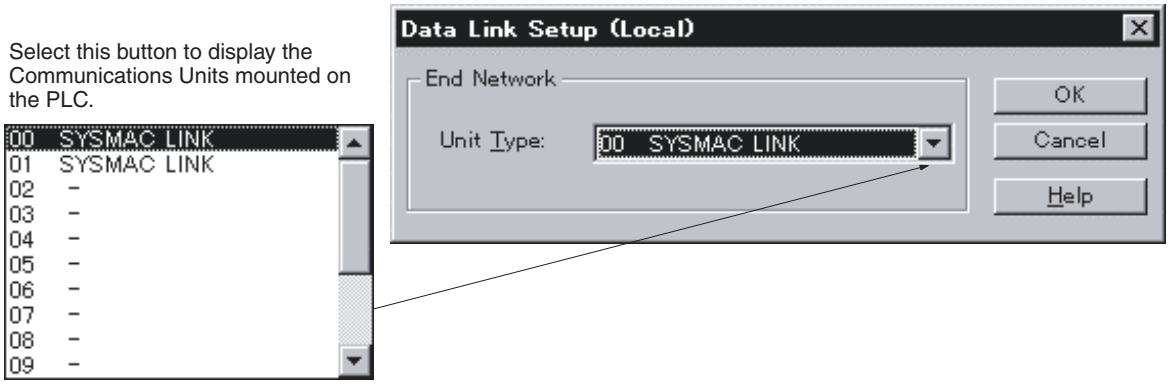

If connected remotely (i.e., through a network), the Data Link Setup (SYSMAC LINK) Dialog Box will appear.

2. Select ***SYSMAC LINK*** and then click the **OK** button. The following dialog box will appear.

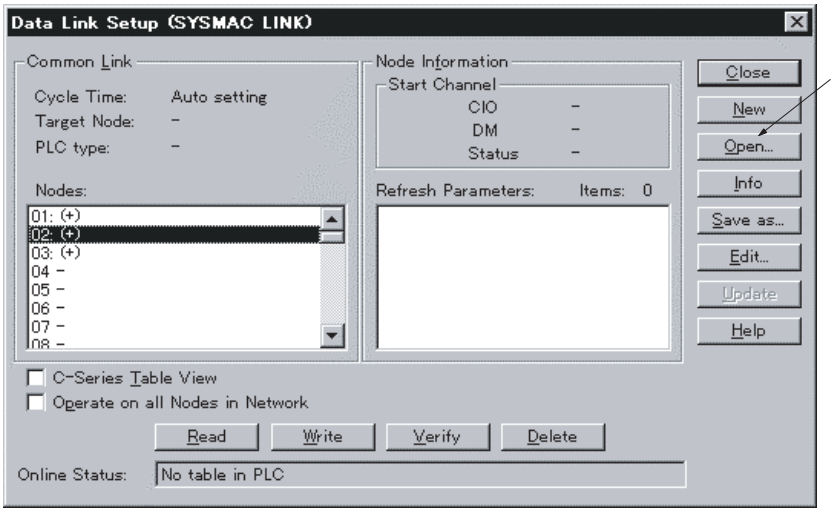

Open the data link table file (*.sl3). Refer to *Data Link Setup (SYSMAC LINK) Dialog Bo**x** Functions* below for other button functions.

3. Click the **Open** button. The Open Dialog Box will appear.
4. Select the data link tables file (Sample.sl3), and then click the **Open** button. The data link tables will be read as follows:

The data link parameters (Common Link Parameters and Refresh Parameters) will be displayed when the data link tables are read.

Click the **Write** button to transfer the data link tables to the PLCs. Refer to *Data Link Setup (SYSMAC LINK) Dialog Box Functions* below for other button functions.

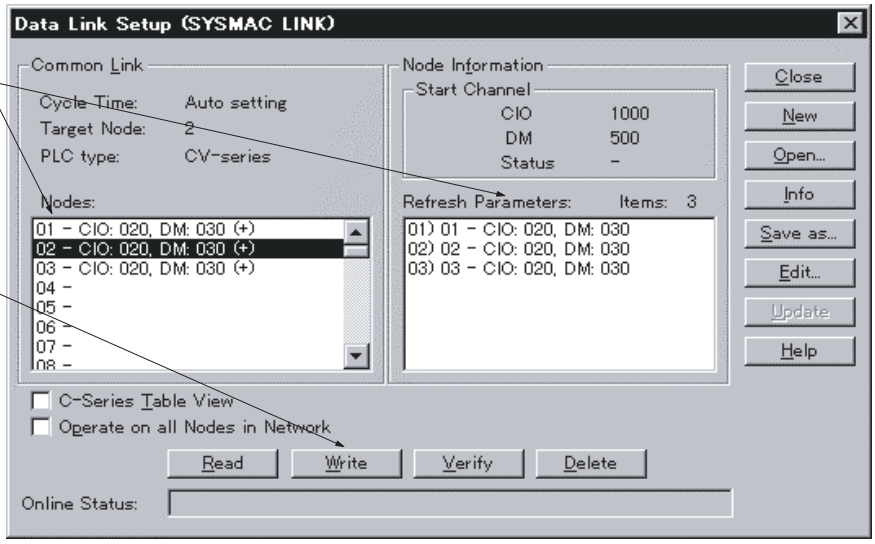

Transferring Data Link Tables

1,2,3...

1. Select the destination PLC node address in the Nodes Field under *Common Link*, or select the ***Operate on all Nodes in Network Checkbox***. If ***Operate on all Nodes in Network*** is selected, you can transfer data link tables simultaneously to all PLCs.
2. Click the ***Write*** button.
   - Data link tables will start to be transferred to the nodes set in the Nodes Field, or to all the nodes on the same network.
   - When the transfer is finished, the bottom of the window will be displayed as follows:

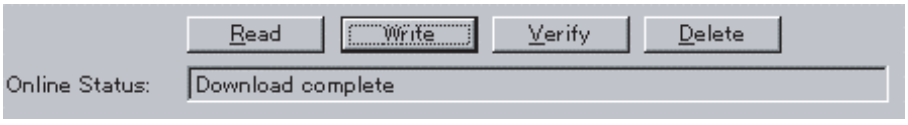

Note If directly connected online with a PLC for which the routing tables have not been set, data link tables cannot be transferred to PLCs that are not directly connected to the network. Perform one of the following to transfer data link tables to PLCs on the network.

- Directly connect to a PLC in which the routing tables have been set and transfer the data link tables.
- Connect online to a PLC on the network, and transfer the data link tables.

Data Link Setup SYSMAC LINK Dialog Box Functions

The following table displays the functions of the Data Link Setup (SYSMAC LINK) Dialog Box.

Button name	Function
Close	Closes the dialog box.
New	Clears the data link table currently in operation.
Open	Reads the data link tables file (*.sl3).
Info	Used to display and enter the name of the creator, file title, comments, etc.
Save as	Used to save the edited data link tables (*.sl3).

Button name	Function
Edit	Used to edit the data link table that has been read.
Update	Transfers the contents of the file edited in the Data Link Editor to the Data Link Setup Dialog Box.
Read	Reads the data link table for a specified node.
Write	Transfers data link tables to the nodes.
Verify	Verifies data link tables between nodes and the Data Link Setup (SYSMAC LINK) Dialog Box.
Delete	Deletes data link tables from the nodes.

Starting and Stopping Data Links (with Status Display)

Connect online to a node to which the data link tables have been transferred before performing the following operations. Data links can be started or stopped from any node if the node has a data link table.

Starting Data Links

1,2,3...

1. Start CX-Net and select ***Data Link*** and then ***Status***. If connected locally (i.e., directly connected to a PLC), the Data Link Status (Local) Dialog Box will be displayed. If connected remotely (i.e., through a network), the Data Link Status Dialog Box will appear.

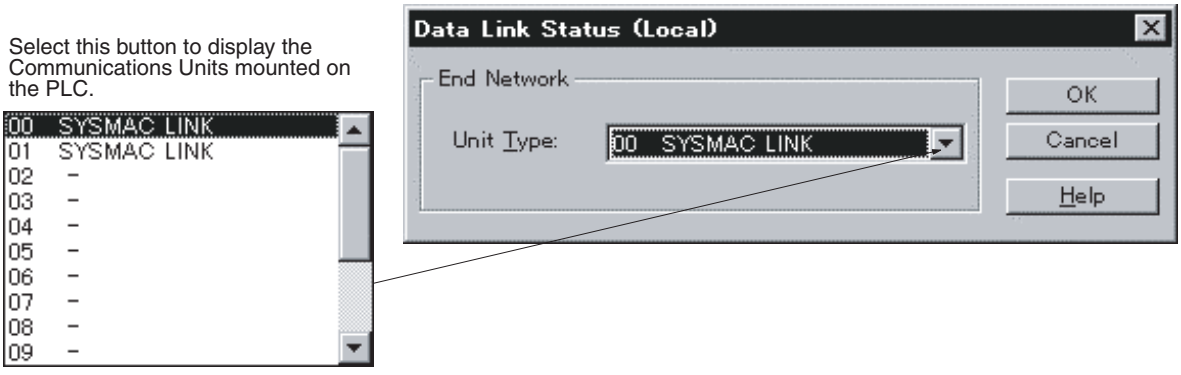

2. Select ***SYSMAC LINK*** and then click the **OK** button.
   - The Data Link Status Dialog Box will be displayed.
   - The status for each of the following will be displayed in the Data Link Status Dialog Box. The communications cycle time and the refresh cycle time can be updated only when this window is open or when the data link has been started or stopped.

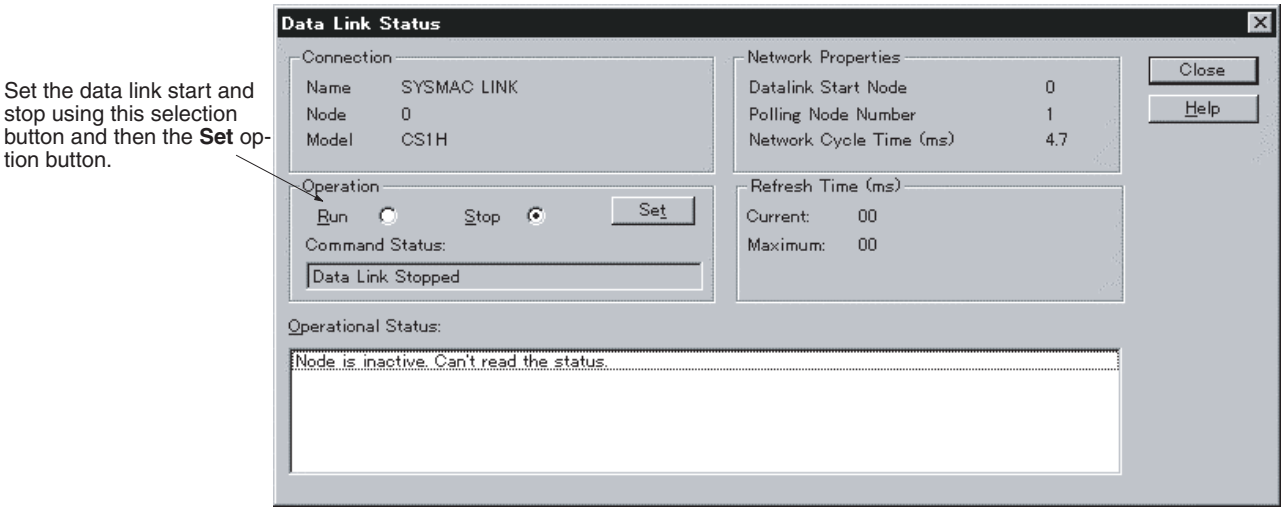

3. Select the ***Run*** option button under *Operation*.
4. Click the **Set** button. The data links will start, and the Operational Status Box will display the operational status.

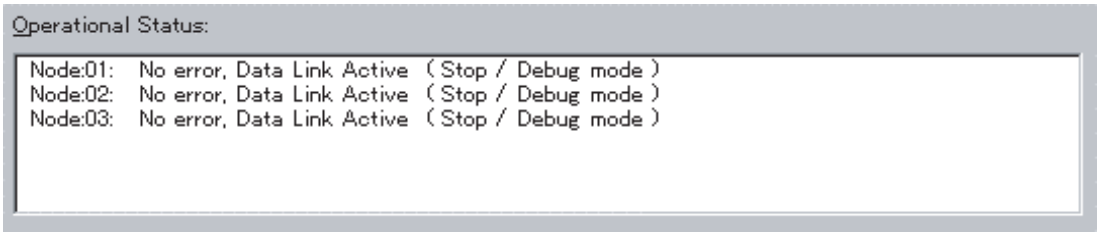

Stopping Data Links

1,2,3...

1. Open the Data Link Status Dialog Box and then select the ***Stop*** option button under *Operation*.
2. Select the ***Set*** button. The data link will stop.

SECTION 5
Network Data Exchange

The CS-series PLCs allow data exchange between networks. This section provides the details of the data exchange functions of the CS-series PLCs via SYSMAC LINK Networks.

5-1 What is Network Interconnection? 84
5-1-1 Interconnecting SYSMAC LINK Networks 84
5-1-2 Interconnecting Different Types of Networks 84
5-2 Routing Tables 86
5-2-1 Routing Table Configuration 86
5-2-2 Local Network Table 86
5-2-3 Relay Network Tables 86
5-3 Routing Table Examples. 87

5-1 What is Network Interconnection?

Network interconnection enables commands and responses for the message service to be sent and received across multiple networks. The four networks listed below can be interconnected to achieve this.

FA Networks

- SYSMAC NET Networks
- SYSMAC LINK Networks
- Controller Link Networks

OA Network

- Ethernet Networks

5-1-1 Interconnecting SYSMAC LINK Networks

SYSMAC LINK Networks can be connected through a CS-series, CVM1, or CV-series PLC.

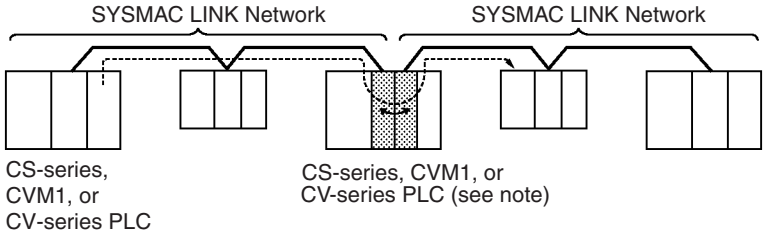

Note A data bridge is created between SYSMAC LINK Units mounted on the same CS-series, CVM1, or CV-series PLC.

5-1-2 Interconnecting Different Types of Networks

A CS-series, CVM1, or CV-series PLC can be used to connect a SYSMAC LINK Network with an Ethernet, SYSMAC NET, or Controller Link Network.

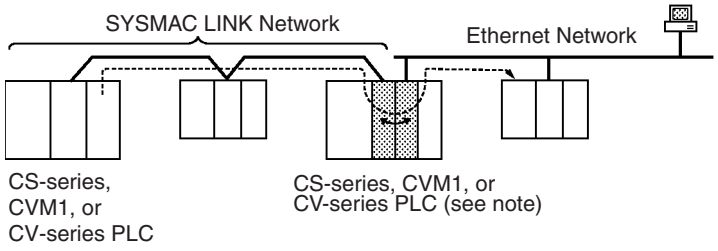

Note A data and communications protocol gateway is created between a SYSMAC LINK Unit and an Ethernet, SYSMAC NET, or SYSMAC LINK Unit mounted to the same CS, CVM1, or CV-series PLC.

Note (1) A bridge is used between Communications Units to connect the same type of networks.

(2) A gateway is used between Communications Units to connect different types of networks.

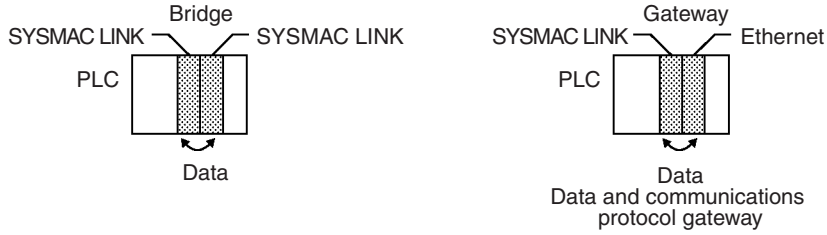

- Although a C200HX/HG/HE PLC supports up to 2 Communications Units, it cannot function as a data bridge or a data and communications protocol gateway.

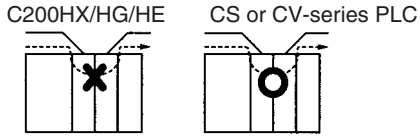

- A CQM1H-series PLC supports only one Communications Unit. It cannot function as a data bridge or a data and communications protocol gateway.
- Communications across bridges or gateways can include up to three networks, including the local network (data generating network).

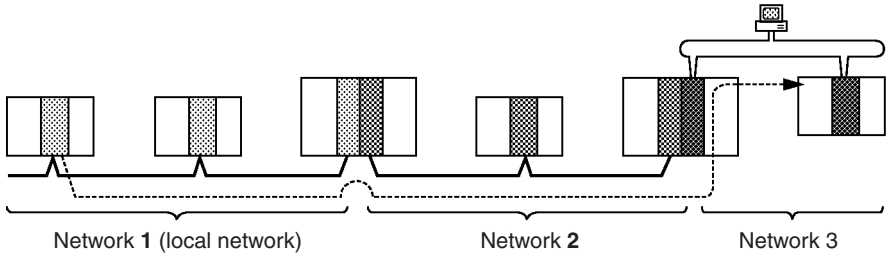

The maximum amount of data that can be sent between networks depends on the type of networks through which data is being sent. The SYSMAC LINK Network is limited a maximum of 552 bytes of data in any one transmission, including the header. If a transmission passes through a SYSMAC LINK Network, as shown in the figure on the preceding page, the amount of data is limited to 552 bytes.

Although 2,012 bytes of data (including the header) can be sent and received with a Controller Link Network, if a transmission between two Controller Link Network passes through a SYSMAC LINK Network, the amount of data would need to be limited to 552 bytes per transmission.

Refer to the manual for the network you are using to determine the maximum amount of data that can be handled.

5-2 Routing Tables

Routing tables are required for data exchange with other networks or when more than one SYSMAC LINK Unit, Controller Link Unit, or Ethernet Unit is mounted on the PLC. For data exchange with other networks, set a routing table on the local node, destination node, and relay node from a host computer or the Support Software. Refer to the Support Software manuals for details.

⚠ **Caution** The CPU Bus Units will be reset if the routing tables are transferred to the CPU Unit from a Programming Device. The reset is required to update the routing table settings. Confirm that the controlled system will not be adversely affected before transferring the routing tables.

5-2-1 Routing Table Configuration

The routing tables consist of a local network table and relay network table and determine the communications path for data exchange between networks.

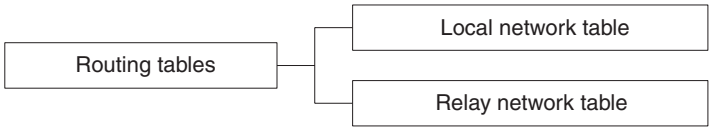

5-2-2 Local Network Table

If more than one Communications Unit (SYSMAC LINK, Controller Link, or Ethernet Unit) is mounted on the PLC, a local network table is required. The local network table has a list of each network and its corresponding Unit.

Two data items are set for each Unit:

Local Network Address:
Network address of the Unit (1 to 127)

CPU Bus Unit Number:
Unit number (0 to 15) of the Communications Unit

5-2-3 Relay Network Tables

To exchange data between two networks, you must set up relay network tables that specify the transmission path to remote destinations.

Data transmission paths include the following settings.

Item	Range	Contents
Destination network	1 to 127	The network address of the designated node.
Relay network	1 to 127	The address of the network through which the destination network can be reached.
Relay node	1 to 62 for SYSMAC LINK 1 to 32 for Controller Link 1 to 126 for Ethernet	The address of the node on the relay network through which the destination network can be reached.

CX-Net Settings Window Example

Create the routing tables using CX-Net in CX-Programmer as shown below. Here, the procedure for CX-Net in CX-Programmer Ver. 1.2 (Service Pack 1) is given as an example.

- Local Network Table
  Local network address is 10 and the SYSMAC LINK Unit's unit number is 5.
- Relay Network Table
  Destination network address is 20, relay network address is 10, and relay node address is four.

The local network table and relay network table are input as follows:

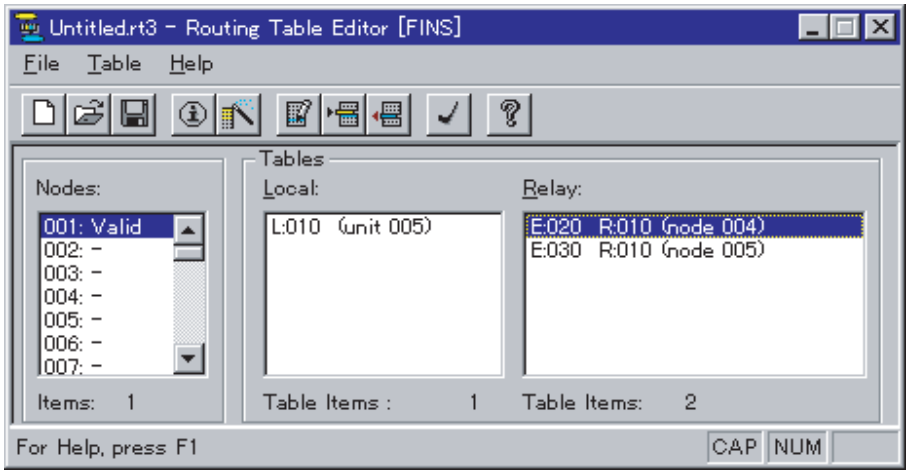

Setting Ranges

Item	Range
Network address	1 to 127
Unit number	0 to 15
Node address	SYSMAC LINK: 1 to 62 Controller Link: 1 to 32 Ethernet: 1 to 126

5-3 Routing Table Examples

Local Network Table

The following illustration shows an example of local network table settings for a single PLC with more than one CPU Bus Unit.

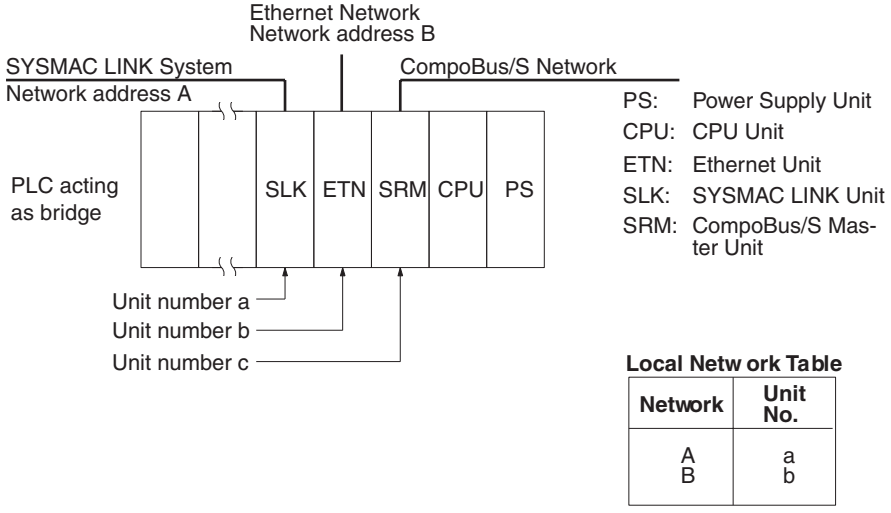

There is no network address for the CompoBus/S Master Unit, so no address is set in the local network table.

Relay Network Tables

The following illustration shows an example of routing table settings with three networks connected to one another. Take a look at the relay network table for PLC 3. When network A is the destination network for PLC 3, B is the relay network and c is the relay node. When network C is the destination network, B is the relay network and e is the relay node.

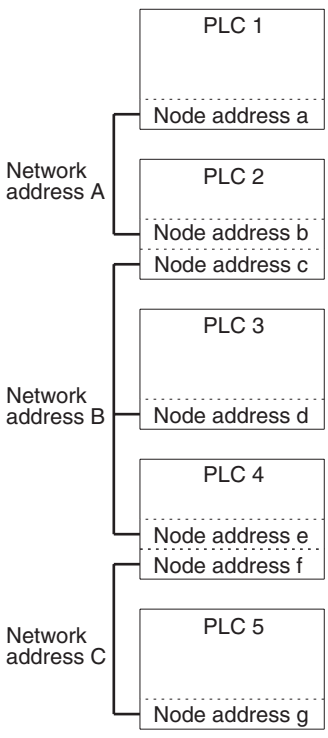

Relay Network Tables

End netwk	Relay netwk	Relay node
B	A	b
C	A	b

End netwk	Relay netwk	Relay node
C	B	e

End netwk	Relay netwk	Relay node
A	B	c
C	B	e

End netwk	Relay netwk	Relay node
A	B	c

End netwk	Relay netwk	Relay node
A	C	f
B	C	f

Actual Example

The routing tables shown below are for the following system.

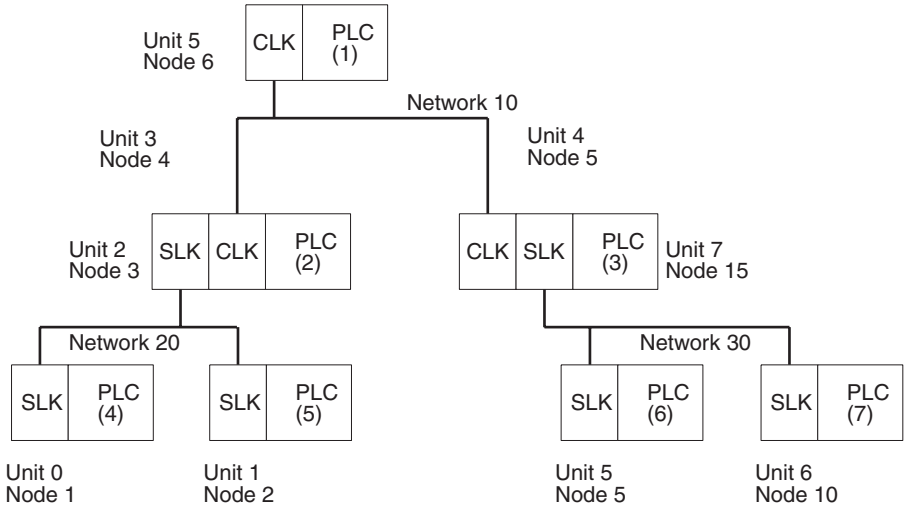

Routing Tables on PLC 1

Local Network Table

Network	Unit No.
10	5

Relay Network Table

End netwk	Relay netwk	Relay node
20	10	4
30	10	5

Routing Tables on PLC 2

Local Network Table

Network	Unit No.
10	3
20	2

Relay Network Table

End netwk	Relay netwk	Relay node
30	10	5

Routing Tables on PLC 3

Local Network Table

Network	Unit No.
10	4
30	7

Relay Network Table

End netwk	Relay netwk	Relay node
20	10	4

Routing Tables on PLC 4

Local Network Table

Network	Unit No.
20	0

Relay Network Table

End netwk	Relay netwk	Relay node
10	20	3
30	20	3

Routing Tables on PLC 5

Local Network Table

Network	Unit No.
20	1

Relay Network Table

End netwk	Relay netwk	Relay node
10	20	3
30	20	3

Routing Tables on PLC 6

Local Network Table

Network	Unit No.
30	5

Relay Network Table

End netwk	Relay netwk	Relay node
10	30	15
20	30	15

Routing Tables on PLC 7

Local Network Table

Network	Unit No.
30	6

Relay Network Table

End netwk	Relay netwk	Relay node
10	30	15
20	30	15

Using Routing Tables

The following descriptions shows how the above routing tables are used for data transmission from PLC 1 to PLC 6 using a SEND(90), RECV(98), or CMND(490) instruction.

1,2,3...

1. PLC 1 checks its relay network table, and sends the data to node 5 (PLC 3) on network 10, to send the data to network 30, on PLC 6.
2. PLC 3 receives the data from PLC 6, checks its local network table, and sends the data to node 5 (PLC 6) via CPU Bus Unit with unit number 7, which is connected to network 30.
3. PLC 6 checks its local network table and confirms that the data transmitted to node 5, network 30, is for PLC 6. Then PLC 6 retrieves the data.

SECTION 6
Message Service

This section describes the PLC ladder network instructions and FINS commands that can be used to transfer data and control operation via a SYSMAC LINK System.

6-1 About Data Read/Write Services 92
6-2 PLC Network Instructions 92
6-2-1 Specifying Destination Nodes 92
6-2-2 Communications Specifications. 93
6-2-3 PLC Memory Areas 93
6-2-4 Communications Ports 94
6-2-5 NETWORK SEND Instruction - SEND(90) 97
6-2-6 NETWORK RECEIVE Instruction - RECV(98). 99
6-2-7 DELIVER COMMAND Instruction - CMND(490) 101
6-2-8 Program Example. 104
6-2-9 Delay Times 105
6-3 FINS Command/Response Format. 108
6-3-1 FINS Commands 108
6-3-2 Command/Response Parameters 109
6-3-3 Communications Data Format 109
6-3-4 FINS Commands for PLCs 110
6-3-5 FINS Commands for SYSMAC LINK Units. 111
6-3-6 Response Codes 111
6-4 FINS Commands for SYSMAC LINK Units 112
6-4-1 DATA LINK START 112
6-4-2 DATA LINK HALT 112
6-4-3 RESET 112
6-4-4 CONTROLLER DATA READ 113
6-4-5 CONTROLLER STATUS READ 113
6-4-6 NETWORK STATUS READ. 115
6-4-7 DATA LINK STATUS READ 117
6-4-8 INTERNODE ECHO TEST 118
6-4-9 BROADCAST TEST RESULTS READ 119
6-4-10 BROADCAST TEST DATA SEND. 119
6-4-11 ERROR LOG READ 120
6-4-12 ERROR LOG CLEAR 121

6-1 About Data Read/Write Services

A SYSMAC LINK Unit provides read/write services that can be used to transfer data and control other nodes on the network or interconnected networks.

The data read/write services use a command/response format. Each time that data or a command from a host computer or CS-series PLC is transmitted, the receiving node returns a response. If responses are not needed, the Unit can be set so that responses are not returned. The same transmission can also be broadcast simultaneously to all nodes on the network.

Data Read/Write Service Transmissions

The data read/write services with the SYSMAC LINK Unit can be divided into four processes, as described below.

Computer-originating Commands

A program is prepared in the computer that transmits commands and receives responses. (When programming in the C code, commands can be transmitted with `slksend` and responses received with `slkrecv` or `slkrcvw`.)

PLC-originating Transfers

Data is transmitted from the PLC using the SEND(90), RECV(98), and CMND(490) instructions. You may need to move data being transferred to/from the locations in memory specified in the instruction, but the actual transmission and reception is handled automatically.

Computer Responses

A program that returns proper responses for received commands must be prepared and loaded in the computer prior to command reception.

PLC Responses

The SYSMAC LINK Unit receives and processes commands and returns the proper responses automatically. Since all of the processing is handled automatically, you do not need to prepare a routine for command reception in the PLC program.

6-2 PLC Network Instructions

Data is sent from the PLC to other nodes (PLCs or computers) using the SEND(90), RECV(98), or CMND(490) instruction in the PLC user program.

6-2-1 Specifying Destination Nodes

The following two types of communication are possible. Messages can be sent to or received from a specific node, or it can be broadcast to all nodes.

Sending and Receiving Data Between Specific Nodes

The PLC's network instructions (SEND(90), RECV(98), and CMND(490)) can be used to transfer data to or from a node specified by network address and node address. The unit address is also specified, enabling communications with a specific Unit at the specified node.

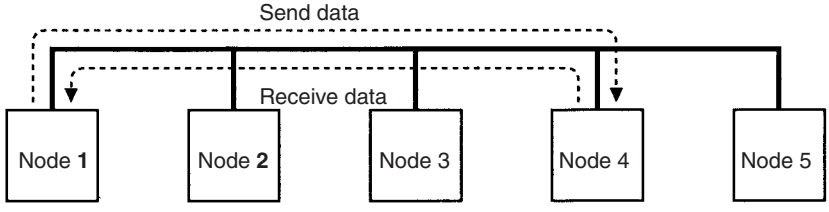

Broadcasting Data

It is possible to transfer the same data to all nodes in a network simultaneously by designating the destination node as FF Hex. This transmission is called broadcasting. No responses are returned to broadcasts.

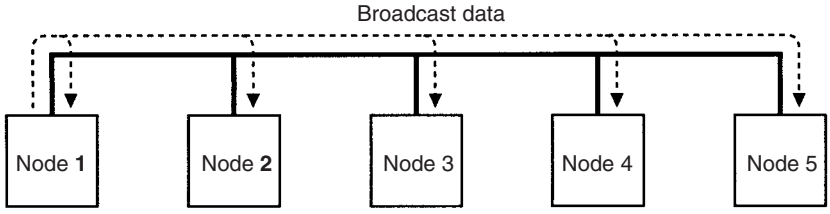

6-2-2 Communications Specifications

The basic specifications of the network instructions are given in the following table.

Transmission format	1:1 (SEND(90), RECV(98), or CMND(490)) 1:N (SEND(90) or CMND(490); data broadcast, no response. Max. number of words: 126 with Ethernet, 62 with SYSMAC LINK, and 32 with Controller Link)
Packet length	SEND(90)/RECV(98): 256 words (512 bytes) max. CMND(490): 542 bytes max.
Data content	SEND(90): Command/response data for data transmission RECV(98): Command/response data for data reception CMND(490):Command/response data for supported functions
Communications ports	Ports 0 to 7 (8 ports can be used at the same time for data exchange)
Response time-out time	0000: 2 s 0001 to FFFF: User settings (in increments of 0.1 s, 0.1 to 6553.5 s)
Number of retries	0 to 15

6-2-3 PLC Memory Areas

The memory areas that can be used for data transfer depend on the model of PLC, as shown in the following table. Be sure not to exceed the end of a memory area when sending or receiving data. Also be sure to set the operands so that the end of the data area is not exceeded.

Area	Range
CIO	CIO 0000 to CIO 6143
Work Area	W000 to W511
Holding Area	H000 to H511
Auxiliary Area	A000 to A959 (See note 1.)
Timer	T0000 to T4095
Counter	C0000 to C4095
Data Memory	D00000 to D32767
Expansion Data Memory	E00000 to E32767 (See note 2.)

Note

(1) Writing is not possible to words A000 through A447 in the Auxiliary Area.

(2) A maximum of thirteen banks can be used for Expansion DM. For details on the EM Area and the number of banks, refer to the operation manual for the PLC model that is being used.

(3) When executing the SEND(90) or RECV(98) instruction on memory in the LR Area, HR Area, or AR Area between a CS-series, CVM1, or CV-series PLC and a C-series PLC (C200HX/HG/HE/HS/H, C1000H, or C2000H), instead of the LR Area, HR Area, or AR Area addresses, use the corresponding addresses given in the following table.

Area in C-series PLC	Corresponding area in CS-series, CVM1, or CV-series PLC
LR00 to LR63	1000 to 1063
HR00 to HR99	1064 to 1163
AR00 to AR27	1164 to 1191

(4) It is not possible to specify the CPU Bus Link Area in a CVM1 or CV-series PLC from a CS-series PLC.

(5) It is not possible to specify the Work Area or Holding Area in a CS-series PLC from a CVM1, CV-series, or C-series PLC.

(6) When executing the SEND(90) or RECV(490) instruction on a CS-series PLC from a CVM1 or CV-series PLC, the areas that can be specified are restricted to the areas of memory built into the CVM1 or CV-series PLC. The SEND(90) and RECV(490) instructions cannot be executed on memory outside these areas.

Specified area in CVM1 or CV-series PLC	Settable range
CIO	0000 to 2555
AR	A000 to A511
TIM	T0000 to T1023
CNT	C0000 to C1023
DM	D00000 to D24575
EM	E00000 to E32765

(7) When executing the SEND(90) or RECV(98) instruction on a CS-series, CVM1, or CV-series PLC from a C-series PLC, the areas that can be specified are restricted to the areas of memory built into the C-series PLC from which the instruction is executed. The SEND(90) and RECV(490) instructions cannot be executed on memory outside these areas. For details on C-series PLC memory areas, refer to the relevant operation manual. When using a C200HW-SLK13/14/23/24 with a C200HX/HG/HE mounted to it, however, the SEND(90) or RECV(490) instructions can be executed for all areas except for the Work Area and Holding Area in CS-series PLCs and the CPU Bus Line Area in CVM1 or CV-series PLCs by using indirect addressing. Refer to the *C-series SYSMAC LINK System Manual* (W174) for details.

(8) Specification of indirect DM Area from a C-series PLC corresponds to the EM Area's current bank. Use indirect addressing to access a specified bank number of the EM Area from a C-series PLC.

6-2-4 Communications Ports

When the SEND(90), RECV(98), or CMND(490) instructions have been executed, the status of the execution will be stored in the Auxiliary Area of the PLC according to the communications port. Using this status information, the PLC can adjust the timing of SEND(90), RECV(98), or CMND(490) execution from the user's program.

Timing Communications Ports

Eight communications ports can be used simultaneously to execute the SEND(90), RECV(98), or CMND(490) instructions, but only one instruction

can be executed at the same time for each port. To execute more than one instructions in sequence at the same port, use the Port Enabled Flags to be sure that a port is not busy before executing a new instruction for it. Port Enabled Flags are contained in the status data provided in PLC memory for network communications.

Name	Address		Contents
	Word	Bit	
Network Instruction Enabled Flag	A202	Port number corresponds to bit number, i.e., port 0: bit 00, port 1, bit 00, etc.	0: Execution not enabled (executing) 1: Execution enabled (not executing)
Network Instruction Error Flag	A219	Port number corresponds to bit number plus 8, i.e., port 0: bit 00, port 1, bit 01, etc.	0: Normal end 1: Abnormal end

Note With CS-series PLCs, ports 0 to 7 are also used for executing the PMCR (PROTOCOL MACRO) instruction, therefore these flags are used for the 4 instructions: SEND(90), RECV(98), CMND(490), and PMCR(260). When the PMCR(260) command is being executed, the same port cannot be used for SEND(90), RECV(98), and CMND(490) instructions.

Communications Instruction Response Codes

The status after a communications instruction has been executed is reflected in the words shown in the following table. During instruction execution, it becomes “00” or “0000,” and it is reflected here after the execution has been completed.

PLC	Word	Bits	Contents
CS Series	A203	---	Port 0 response code
	A204	---	Port 1 response code
	A205	---	Port 2 response code
	A206	---	Port 3 response code
	A207	---	Port 4 response code
	A208	---	Port 5 response code
	A209	---	Port 6 response code
	A210	---	Port 7 response code

Flag Timing

The following timing chart shows the timing of the Port Enabled Flag, Port Execute Error Flag, and response codes. In this example two commands were executed for port 0 but there was an error for command 1.

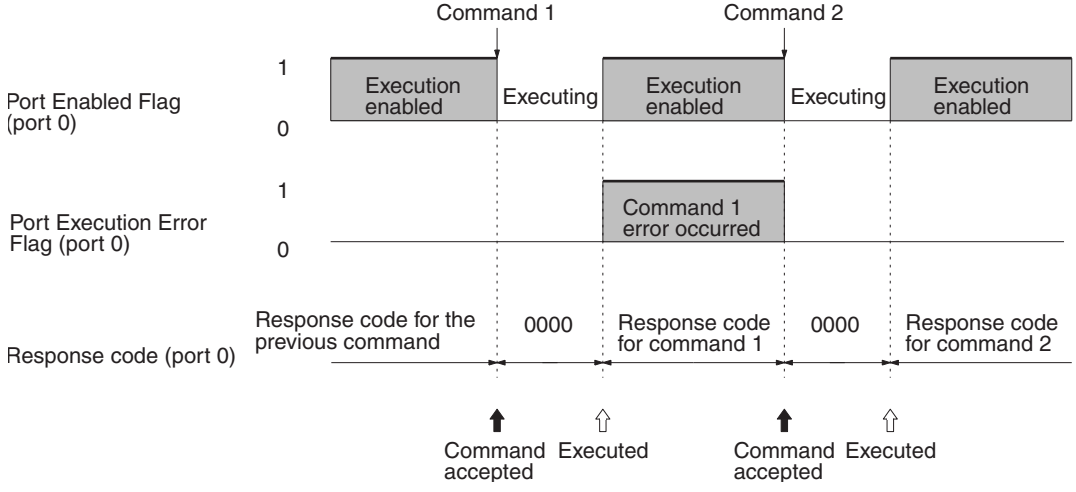

Note The new data will be sent if the data in the transmission area is changed while a command is being executed. Do not change data in the area being transmitted unless the Port Enabled Flag is ON.

CMND(490) Instructions

The following will affect the Port Execute Error Flag and response code when you have executed the CMND(490) instruction.

1,2,3...

1. A response time-out error.
2. The number of transmission data bytes exceeding the maximum permissible range (more than 021E (542) bytes for SYSMAC LINK Units).
3. The number of response data bytes exceeding the number of reception data bytes that was set (in this case, no response will be recorded).

Errors other than the above will be shown in the response code in the response block but will not be shown in the Port Execution Error Flag or response codes.

6-2-5 NETWORK SEND Instruction - SEND(90)

The SEND(90) instruction allows a PLC to write data to the memory of a device located at a node on a local or remote network.

Format

The format of the SEND(90) instruction is as follows:

Ladder Symbol

```
      (90)
——[SEND   S      D      C  ]
```

Variations

@SEND(90)

Operand Data Areas

S: 1st source word	CI**O**, **W**, H, A, T, C, DM, DR*, IR*
D: 1st destination word	CI**O**, **W**, H, A, T, C, DM, DR*, IR*
C: 1st control word	CI**O**, **W**, H, A, T, C, DM, DR*, IR*

*Indirect addressing only

Control Data

Set the destination node address to $FF to broadcast the data to all nodes in the designated network or to $00 to send to a destination within the node of the PLC executing the send.

Word	Bits 00 to 07	Bits 08 to 15
C	Number of words (1 to 256 in 4-digit hexadecimal, i.e., $0001 to $0100)	
C+1	Destination network address (0 to 127, i.e., $00 to $7F)	Bits 08 to 15: Set to 0.
C+2	Destination unit address	Destination node address
C+3	Bits 00 to 03: No. of retries (0 to 15 Hex, i.e., $0 to $F) Bits 04 to 07: Set to 0.	Bits 08 to 11: Port number ($0 to $7) Bit 12 to 14: Set to 0. Bit 15: ON: No response. OFF: Response returned.
C+4	Response monitoring time ($0001 to $FFFF = 0.1 to 6553.5 seconds)	

Note Transmissions cannot be sent to the PLC executing the send.

1,2,3...

1. Number of Words
   Set the total number of words to be transferred.
2. Destination Network Address
   Set the destination network address to 00 if the destination network address is a local network. If more than one SYSMAC LINK Unit, Controller Link Unit, or Ethernet Unit is mounted to the PLC, the network of the Unit with the smallest unit address will be considered to be the local network.
3. Destination Node Address
   Set the destination node address to FF for broadcasting within the local network. Set to 00 (and set the network address to 00) for transmission to a device at the local node.
4. Destination Unit Address
   Set the destination unit to 00 if the destination is a PLC. If the destination is a user's application on a computer (NSB), set the destination unit address to 01 (user application 1).

Destination	Address (hexadecimal)
PLC (CPU)	00
NSB (computer)	01 (user application)
CPU Bus Unit	10 to 1F: Unit No. 0 to F (0 to 15)
Inner Board	E1
Unit connected with the network	FE

5. Response Bit (Bit 15 of C+3)
   Usually set this bit to OFF (0: response required). If you do not need any response, set the bit to ON (1: not required).
6. Port Number
   Set the communications port number that the SEND(90) instruction will be sent from.
7. Number of Retries
   Set the number of retries for unsuccessful transmissions. You can set the number between 1 to 15. If 15 has been set, for example, the SEND(90) instructions will be re-transmitted up to 15 times when the PLC does not receive a response from the destination node.
8. Response Monitor Time (Unit: 0.1 S)
   Designates the length of time that the PLC retries transmission when bit 15 of C+3 is OFF and no response is received. The default value is $0000, which indicates 2 seconds. The response function is not used when the destination node address is set to $FF, broadcasting to all nodes in the network.

Range of Control Data The permissible ranges of control data to be set are as follows:

Item	Value
Number of words	0001 to 0100 (1 to 256 words)
Destination network address	00: Local network 01 to 7F: Destination network address
Destination node address	00: Transmission within local node 01 to 3E: Destination node address (1 to 62) (SYSMAC LINK) 01 to 20: Destination node address (1 to 32) (Controller Link) 01 to 7E: Destination node address (1 to 126) (Ethernet, SYSMAC NET) FF: Broadcasting
Destination unit address	00: PLC (CPU Unit) 01: Computer (NSB) user application 10 to 1F: Unit number 0 to 15 E1: Inner Board FE: Unit connected with the network
Response bit	0 (OFF): Required 1 (ON): Not required
Communications port number	0 to 7 (0 to 7)
Number of retries	0 to F (0 to 15)
Response monitor time	0000: 2 s (default) 0001 to FFFF: 0.1 to 6,553.5 s with 0.1-s increments (set by the user)

Note When broadcasting, there is no response from the nodes.

6-2-6 NETWORK RECEIVE Instruction - RECV(98)

The RECV(98) instruction enables the local node to write to its memory, data sent from a node either on a local or remote network.

Format

The format of the RECV(98) instruction is as follows:

Ladder Symbol

(98)
——[RECV S D C]

Variations

@RECV(98)

Operand Data Areas

S: 1st source word	CI**O**, **W**, H, A, T, C, DM, DR*, IR*
D: 1st destination word	CI**O**, **W**, H, A, T, C, DM, DR*, IR*
C: 1st control word	CI**O**, **W**, H, A, T, C, DM, DR*, IR*

*Indirect addressing only

Control Data

Set the source node address to $00 to send data within the PLC executing the instruction.

Word	Bits 00 to 07	Bits 08 to 15
C	Number of words (1 to 256 in 4-digit hexadecimal, i.e., $0001 to $0100)	
C+1	Source network address (0 to 127, i.e., $00 to $7F)	Bits 08 to 15: Set to 0.
C+2	Source unit address	Source node address
C+3	Bits 00 to 03: No. of retries (0 to 15 Hex, i.e., $0 to $F) Bits 04 to 07: Set to 0.	Bits 08 to 11: Port number ($0 to $7) Bit 12 to 14: Set to 0. Bit 15: ON: No response. OFF: Response returned.
C+4	Response monitoring time ($0001 to $FFFF = 0.1 to 6553.5 seconds)	

Note Transmissions cannot be received from the PLC executing RECV(98).

1,2,3...

1. Number of Words
   Set the total number of words to be transferred.
2. Source Network Address
   Set the Source network address to 00 if you send the data to within the local network. If more than one SYSMAC LINK Unit, Controller Link Unit, or Ethernet Unit is mounted on the PLC, the network of the Unit with the smallest unit address will be considered to the local network.
3. Source Node Address
   Set the source node address to 00 for devices at the local node.
4. Source Unit Address
   Set the source unit address to 00 if the destination is a PLC. If it is a user application on a computer, set the destination unit to 01 (user application 01). For a BASIC Unit, add 10 to the unit number (0 to F) so that the destination unit address is from 10 to 1F.

Destination	Address (hexadecimal)
PLC (CPU)	00
NSB (computer)	01 (user application)
CPU Bus Unit	10 to 1F: Unit Number 0 to F (0 to15)
Inner Board	E1
Unit connected with the network	FE

5. Response Bit (Bit 15 of C+3)
   Always set this bit to OFF (0: response required).

6. Port Number
   Set the communications port number that the RECV(98) instruction will be sent to.
7. Number of Retries
   Set the number of retries for unsuccessful transmissions. You can set the number between 1 to 15. If 15 has been set, for example, the RECV(98) instructions will be re-transmitted up to 15 times when the PLC does not receive a response from the destination node.
8. Response Monitor Time
   Designates the length of time that the PLC retries transmission when bit 15 of C+3 is OFF and no response is received. The default value is $0000, which indicates 2 seconds.

Range of Control Data

The permissible ranges of control data to be set are as follows:

Item	Value
Number of words	0001 to 0100 (1 to 256 words)
Source network address	0: Local network 01 to 7F: Source network address
Source node address	00: Transmission within local PLC 01 to 3E: Source node address (1 to 62) (SYSMAC LINK) 01 to 20: Source node address (1 to 32) (Controller Link) 01 to 7E: Source node address (1 to 126) (Ethernet, SYSMAC NET)
Source unit address	00: PLC (CPU Unit) 01: Computer (NSB), user application 10 to 1F: Unit number 0 to 15 E1: Inner Board FE: Unit connected with the network
Response bit	0 (OFF): Required
Communications port number	0 to 7 (0 to 7)
Number of retries	0 to F (0 to 15)
Response monitor time	0000: 2 s (default) 0001 to FFFF: 0.1 to 6,553.5 s in 0.1-s increments (set by the user)

6-2-7 DELIVER COMMAND Instruction - CMND(490)

The CMND(490) instruction is used to send specific commands to transfer data or to control operation at the destination node. When a command is sent, a response is returned. Specifically, the CMND(490) instruction transmits a command beginning at word S to the designated Unit at the destination node address in the designated network and receives the response beginning at word D. Refer to *6-3-4 FINS Commands for PLCs* and *6-4 FINS Commands for SYSMAC LINK Units* for the commands that can be sent and the responses received.

Format

The format of the CMND(490) instruction is as follows:

Ladder Symbol

(490)
CMND S D C

Variations

@CMND(490)

Operand Data Areas

S: 1st command word	CI**O**, **W**, H, A, T, C, DM, DR*, IR*
D: 1st response word	CI**O**, **W**, H, A, T, C, DM, DR*, IR*
C: 1st control word	CI**O**, **W**, H, A, T, C, DM, DR*, IR*

*Indirect addressing only

Control Data

The control words, beginning with C, specify the number of bytes of control data to be sent, the number of bytes of response data to be received, the destination node, and other parameters.

Word	Bits 00 to 07	Bits 08 to 15
C	Number of bytes to send (2 to 542, i.e., $0002 to $021E)[1]	
C+1	Number of bytes to receive (2 to 542, i.e., $0002 to $021E)[1]	
C+2	Destination network address (0 to 127, i.e., $00 to $7F)[2]	Bits 08 to 15: Set to 0.
C+3	Destination unit address[4]	Destination node address[5]
C+4	Bits 00 to 03: No. of retries (0 to 15 Hex, i.e., $0 to $F) Bits 04 to 07: Set to 0.	Bits 08 to 11: Port number ($0 to $7) Bit 12 to 14: Set to 0. Bit 15: ON: No response. OFF: Response returned.
C+5	Response monitoring time ($0001 to $FFFF = 0.1 to 6553.5 seconds)[6]	

Note Commands cannot be sent to the PLC executing CMND(490).

1,2,3...

1. Number of Bytes to Send
   Set the total number of bytes of command data (including command code) stored at the first command and following words of the command block.
2. Number of Bytes to Receive
   Set the total number of bytes of response data (including response code) to be stored at the first response and following words of the response block.
3. Destination Network Address
   Set the destination network address to 00 if sending the command to a node in the local network. If more than one SYSMAC LINK Unit, Controller Link Unit, or Ethernet Unit is mounted on the PLC, the network of the Unit with the smallest unit address will be considered to be the local network.
4. Destination Node Address
   Set the destination node address to FF for broadcasting within the local network. Set to 00 (and set the network address to 00) for transmission to a device at the local node. The destination node address can have the following values:
5. Destination Unit Address
   Set the network destination address as shown below. If the Destination

Unit Address has been set to FE, commands will be sent to the SYSMAC LINK Unit, Controller Link Unit, or Ethernet Unit with the relevant destination node address.

Destination	Address (hexadecimal)
PLC (CPU)	00
NSB (computer)	01 (user application)
CPU Bus Unit	10 to 1F: Unit Number 0 to F (0 to15)
Inner Board	E1
Unit connected with the network	FE

6. Response Bit
   Usually set this bit to OFF (0: required). If no response is required, set the bit to ON (1: Not required).
7. Communications Port Number
   Set the communications port number that the CMND(490) instruction will be sent to.
8. Number of Retries
   Set the number of retries for unsuccessful transmissions. You can set the number between 1 to 15. If 15 has been set, for example, the CMND(490) instructions will be re-transmitted up to 15 times when the PLC does not receive a response from the destination node.
9. Response Monitor Time (Unit: 0.1 S)
   Designates the length of time that the PLC retries transmission when bit 15 of C+3 is OFF and no response is received. The default value is $0000, which indicates 2 seconds.

Note If more than the *Number of Bytes to Receive* is received, no response will be stored. If fewer bytes are received, the response data will be stored and the unused memory area of the PLC will remain unchanged.

Range of Control Data The permissible ranges of control data are as follows:

Item	Value
Number of bytes to send	0002 to 021E (2 to 542 bytes)
Number of bytes to receive	0002 to 021E (2 to 542 bytes)
Destination network address	00: Local network 01 to 7F: Destination network address
Destination node address	00: Transmission within local PLC 01 to 3E: Destination node address (1 to 62) (SYSMAC LINK) 01 to 20: Destination node address (1 to 32) (Controller Link) 01 to 7E: Destination node address (1 to 126) (Ethernet, SYSMAC NET) FF: Broadcasting
Destination unit address	00: PLC (CPU Unit) 01: Computer (NSB), user application 1 10 to 1F, or FE: CPU Bus Unit (see note 1). E1: Inner board FE: SYSMAC NET Link Unit or SYSMAC LINK Unit
Response Bit	0 (OFF): Required 1 (ON): Not required
Communications port number	0 to 7 (0 to 7)
Number of retries	0 to F (0 to 15)
Response monitor time	0000: 2 s (default) 0001 to FFFF: 0.1 to 6,553.5 s with 0.1-s increments (set by the user)

Note (1) FE, or unit number + 10 (FE can be set when the destination is a SYSMAC NET Link, SYSMAC LINK Unit, Controller Link Unit, or Ethernet Unit.

(2) When broadcasting, there is no response from the nodes. even if the Response Bit has been turned OFF.

6-2-8 Program Example

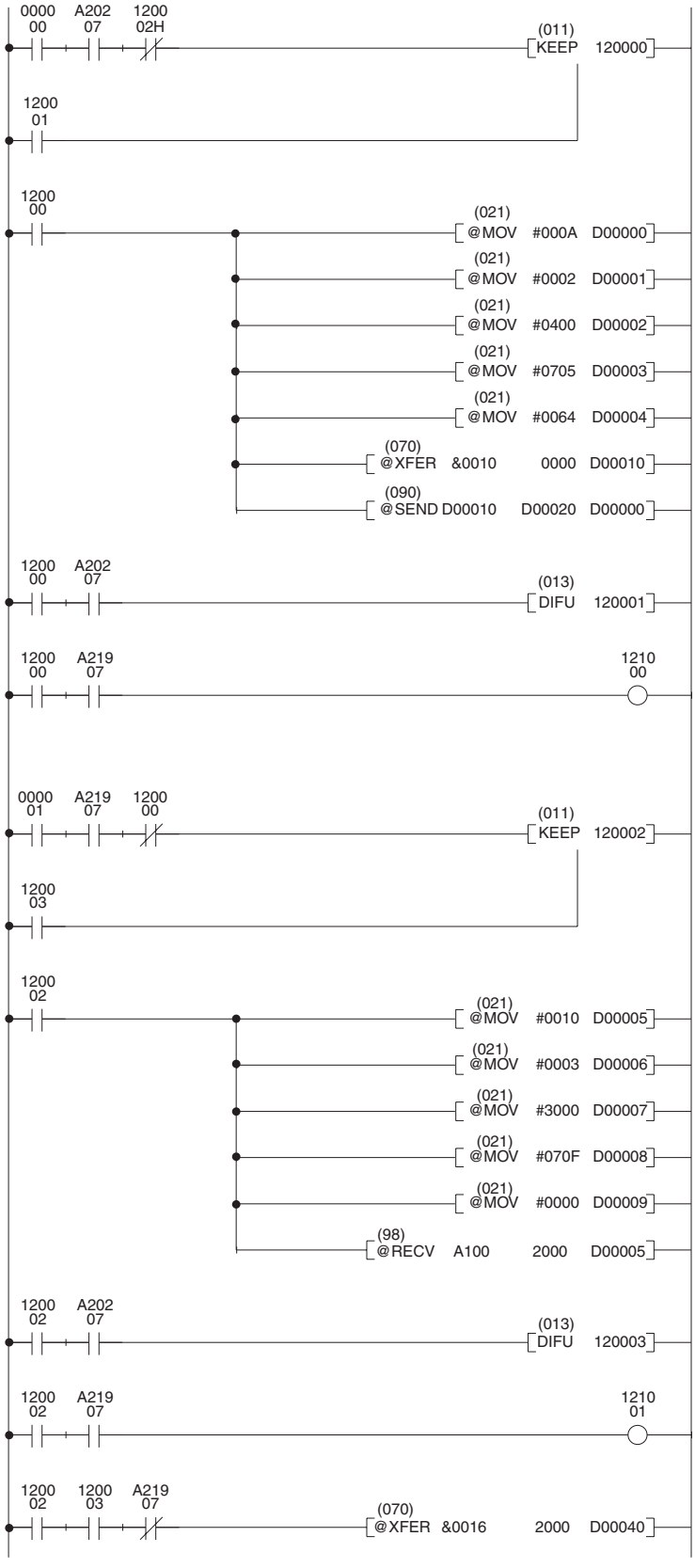

The SEND(90) program section will run when CIO 000000 is ON, provided that the Enabled Flag for port 7 is ON and the RECV(98) instruction has not been executed.

CIO 120000 is ON while the SEND(90) instruction is being executed, and it goes OFF when the execution of the instruction has been completed.

The 10-word data starting from D00010 on the local PLC is sent to D00020 and following words on the PLC with a unit address of 0, node address of 4, and network address of 2.

Word	Content	Meaning
D00000	00 0A	Number of words: 10
D00001	00 02	Destination network address: 2
D00002	04 00	Destination node address: 4 Destination unit address: 0
D00003	07 05	Communications port No.: 7 Number of retries: 5
D00004	00 64	Response monitor time: 10 s

Storing the Send Data
The 10-word data starting from 0000 is stored in D00010 and following words.

Transmission error display

The RECV(98) program will run when CIO 000001 is ON, provided that the Enabled Flag for port 7 is ON and the SEND(90) instruction has not been executed.

CIO 120002 is ON while the RECV(98) instruction is being executed, and it goes OFF when the execution of the instruction has been completed.

The 16-word data starting from A100 on the PLC with a unit address of 0, node address of 48, network address of 3 is stored at CIO 2000 and following words a the local PLC.

Word	Content	Meaning
D00005	00 10	Number of words: 16
D00006	00 03	Destination network address: 3
D00007	30 00	Destination node address: 48 Destination Unit address: 0
D00008	07 0F	Communications port No.: 7 Number of retries: 15
D00009	00 00	Response monitor time: Default

Reception error display

Reception data processing
When the data is received without an error, the 16-word data received at CIO 2000 and following words is stored in D00040 and following words on the same PLC.

Note To execute more than one instruction in sequence at the same port, you must use the Port Enabled Flags to be sure that only one instruction is being executed at the same time for any one port.

6-2-9 Delay Times

The two diagrams that follow indicate the sequence of processing that will enable users to calculate the maximum delay time to be expected between the time SEND(90) or RECV(98) is executed and the time the data is stored in the remote or local node's memory area, ready for use by other instructions in the program.

SEND(90)

The following diagram indicates the data flow that will yield the maximum delay time from the time SEND(90) is executed by the user program to the time the SYSMAC LINK Unit stores the data in the destination Unit's memory.

Note Be sure to take into account the time required for data links and program execution, which are not included in the following example.

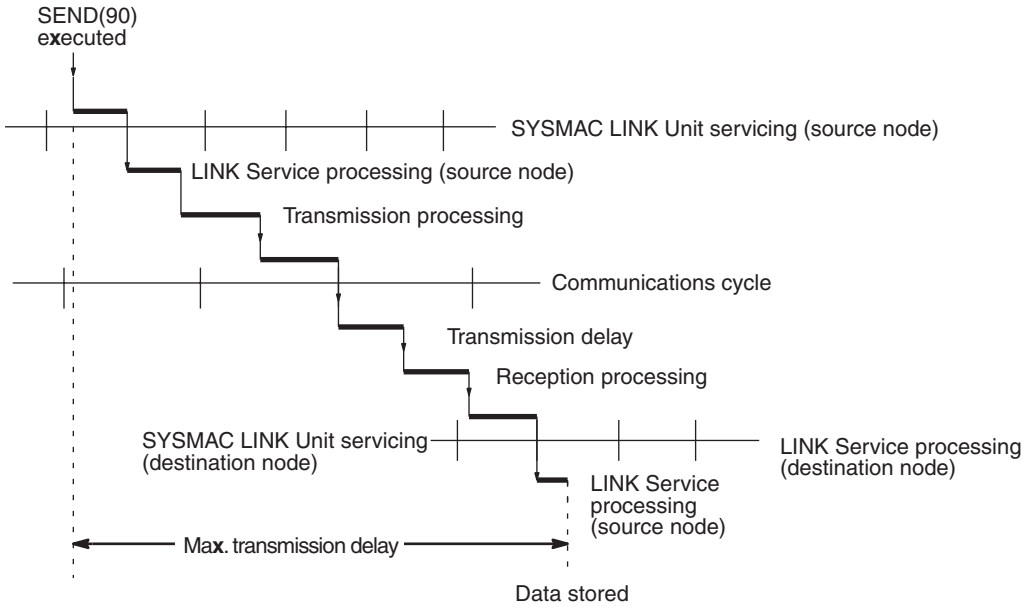

Max. transmission delay = Link servicing interval (source node) + Link service processing (source node) + Transmission processing + Communications cycle time + Transmission delay + Reception processing + LINK Unit servicing interval (destination node) + Link service processing (destination node)

Link Servicing Interval (Source and Destination Nodes)

Links are serviced once per PLC execution cycle. Refer to the *CS-series PLC Operation Manual* for details.

Link Service Processing (Source and Destination Nodes)

Link service processing is the same as the PLC's peripheral servicing and is approximately 1 ms for SYSMAC LINK Units.

Transmission and Reception Processing

Number of words transferred x 0.0045 ms + 4 ms

Communications Cycle Time

Coaxial: Max. node address × 0.01 ms + No. of nodes × 0.075 ms + No. of polled units × 0.75 ms + 1.322 ms
Optical: Max. node address × 0.01 ms + No. of nodes × 0.133 ms + No. of polled units × 0.75 ms + 1.322 ms

Transmission Delay

Number of words transferred × 0.008 ms + 0.204 ms

Note The I/O response time can increase due to noise or restrictions on the number of frames that can be transmitted while the data link is operating.

Example

In this example, the maximum transmission delay is calculated for an instruction sending 256 words of data in a system with 32 nodes. Network specifics are detailed below:

Max. node address: 32
Number of nodes: 32
Number of polled units: 4
Destination node CPU execution processing: Non-synchronous
Number of words: 256
Communications: coaxial cable
Data link: halted

Delay cause	Maximum delay (ms)
Link servicing interval (source node)	PLC cycle time
Link service processing (source node)	1 ms
Communications cycle time	32 × 0.01 + 32 × 0.075 + 4 × 0.75 + 1.322 = 7.042 ms
Transmission processing	256 × 0.0045 + 4 = 5.152 ms
Transmission delay	256 × 0.008 + 0.204 = 2.252 ms
Reception processing	256 × 0.0045 + 4 = 5.152 ms
Link servicing interval (destination node)	CPU Unit cycle time
Link service processing (destination node)	1 ms
Max. transmission delay	**CPU Unit cycle time (source node) + CPU Unit cycle time (destination node) + 21.598 ms**

RECV(98) Instruction Maximum Delay Time

The data flow which will yield the maximum transfer interval from the time the RECV(98) instruction is executed by the user program to the time the SYSMAC LINK Unit stores the data in the local Unit's memory area is described below.

Note Be sure to take into account the time required for data links and program execution, which are not included in the following example.

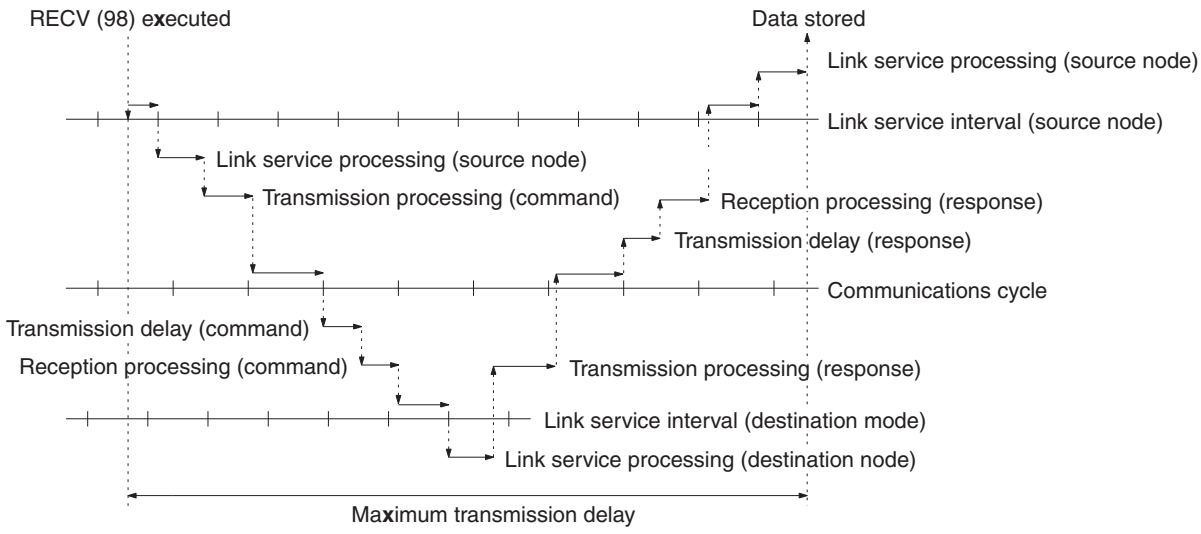

Max. transmission delay = Link servicing interval (source node) + Transmission processing (command) + Communications cycle + Transmission delay (command) + Reception processing (command) + Link servicing interval (destination node) + LINK service processing (destination node) + Transmission processing (response) + Communications cycle + (transmission delay (response) + Reception processing (response) + Link servicing interval (source node) + LINK service processing (source node).

Link Servicing Interval (Source and Destination Nodes)

Links are serviced once per PLC execution cycle. Refer to the *CS-series PLC Operation Manual* for details.

Link Service Processing (Source and Destination Nodes)

Link service processing is the same as the PLC's peripheral servicing and is approximately 1 ms for SYSMAC LINK Units.

Transmission and Reception Processing

Commands: 2 ms
Responses: Number of words transferred x 0.0045 ms + 4 ms

Communications Cycle Time

Coaxial: Max. node address × 0.01 ms + No. of nodes × 0.075 ms + No. of polled units × 0.75 ms + 1.322 ms
Optical: Max. node address × 0.01 ms + No. of nodes × 0.133 ms + No. of polled units × 0.75 ms + 1.322 ms

Transmission Delay

Commands: 0.204 ms
Responses: Number of words transferred x 0.008 ms + 0.204 ms

Note The I/O response time can increase due to noise or restrictions on the number of frames that can be transmitted while the data link is operating.

Example

In this example, the maximum transmission delay is calculated for an instruction receiving 256 words of data in a system with 32 nodes. Network specifics are detailed below:

Max. node address: 32
Number of nodes: 32
Number of polled units: 4
Number of words: 256
Communications: coaxial cable
Data link: halted

Delay cause	Maximum delay (ms)
LINK Unit servicing (source node)	PLC cycle time
LINK service processing (source node)	1 ms
Transmission processing (command)	2 ms
Communications cycle	32 × 0.01 + 32 × 0.075 + 4 × 0.75 + 1.322 = 7.042 ms
Transmission delay (command)	0.204 ms
Reception processing (command)	2 ms
Link servicing interval (destination node)	CPU Unit cycle time
Link service processing (destination node)	1 ms
Transmission processing (response)	256 × 0.0045 + 4 = 5.152 ms
Transmission delay (response)	256 × 0.008 + 0.204 = 2.252 ms

Delay cause	Maximum delay (ms)
Reception processing (response)	256 × 0.0045 + 4 = 5.152 ms
Max. transmission delay	**CPU Unit cycle time (source node) × 2 + CPU Unit cycle time (destination node) + 33.844 ms**

6-3 FINS Command/Response Format

This section describes the format of the commands and responses used with the CMND(490) instruction via a CV-series SYSMAC LINK Unit. SYSMAC LINK Units support only FINS commands.

Unless another format is specifically indicated, all commands and responses are in hexadecimal. Commands that are sent to a PLC CPU differ from those that are sent to a SYSMAC LINK Unit.

Although SYSMAC CS-series PLCs support both C-mode and FINS commands, CS-series SYSMAC LINK Units do not support C-mode commands, which are used for data exchanges with SYSMAC C-series PLCs.

6-3-1 FINS Commands

FINS commands form a command system for message services across different OMRON networks. They can be used for various control operations, such as sending and receiving data, changing operating modes, executing forced set and forced reset operations, performing file operations, and so on. FINS commands make it possible to freely communicate with Units in various networks and on CPU Racks by simply specifying the network, node, and unit.

FINS commands have the following features:

1,2,3...

1. They are defined in the application level and do not depend on lower levels (i.e., the physical and data link levels). This allows them to be used across a variety of networks and CPU buses. Specifically, they can be used with SYSMAC LINK, Controller Link, and Host Link networks, and between CPU Units and CS-series CPU Bus Units.

   Note FINS commands are sent with UDP/IP headers when using Ethernet and with Host Link command headers when using Host Link.

2. FINS commands can be used to access various kinds of devices besides CPU Units. Devices such as CPU Units, CS-series CPU Bus Units, personal computers (boards), and Inner Boards can be identified and specified by their unit addresses.

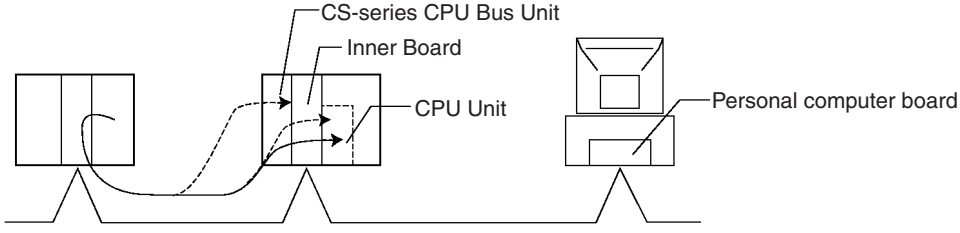

3. FINS commands support network relay operations, so they can pass through a network hierarchy to access devices on up to three network levels (including the local network).

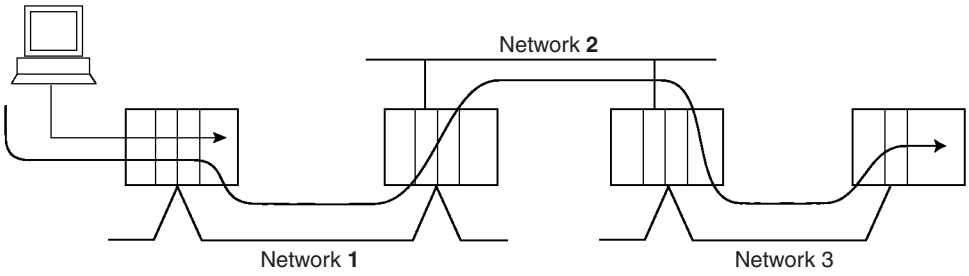

Types of FINS Commands

There are basically two kinds of FINS commands: Those addressed to CPU Units and those addressed to CS-series CPU Bus Units. Among FINS commands for CPU Units, there are commands addressed to the various models of CPU Unit, such as the CS-series CPU Units, CV-series CPU Units, C200HX/HG/HE CPU Units, and so on. The basic code system is the same, but the detailed specifications vary according to the CPU Unit.

Among FINS commands for CS-series CPU Bus Units, there are commands addressed to SYSMAC LINK Units, to the Controller Link Unit, and so on.

6-3-2 Command/Response Parameters

All parameters used in commands and responses are in hexadecimal, unless otherwise specified.

6-3-3 Communications Data Format

Command Format

Commands have the following format. This data must be stored beginning at first command word specified as an operand (S) of the CMND(490) instruction.

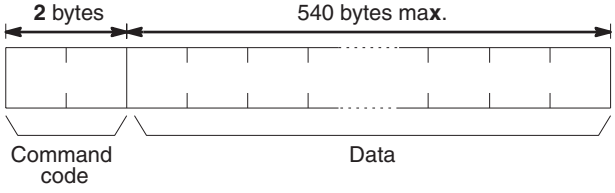

Response Format

Responses have the following format and are stored beginning at the first response word specified as an operand (D) of the CMND(490) instruction.

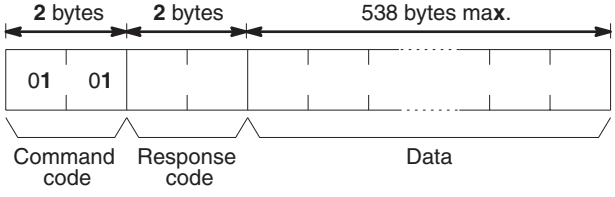

6-3-4 FINS Commands for PLCs

Command code		Name	PLC mode			
			RUN	MONITOR	DEBUG	PROGRAM
01	01	MEMORY AREA READ	Valid	Valid	Valid	Valid
	02	MEMORY AREA WRITE	Valid	Valid	Valid	Valid
	03	MEMORY AREA FILL	Valid	Valid	Valid	Valid
	04	MULTIPLE MEMORY AREA READ	Valid	Valid	Valid	Valid
	05	MEMORY AREA TRANSFER	Valid	Valid	Valid	Valid
02	01	PARAMETER AREA READ	Valid	Valid	Valid	Valid
	02	PARAMETER AREA WRITE	Valid	Valid	Valid	Valid
	03	PARAMETER AREA CLEAR	Valid	Valid	Valid	Valid
03	04	PROGRAM AREA PROTECT	Valid	Valid	Valid	Valid
	05	PROGRAM AREA PROTECT CLEAR	Valid	Valid	Valid	Valid
	06	PROGRAM AREA READ	Valid	Valid	Valid	Valid
	07	PROGRAM AREA WRITE	Not valid	Valid	Valid	Valid
	08	PROGRAM AREA CLEAR	Not valid	Not valid	Not valid	Valid
04	01	RUN	Valid	Valid	Valid	Valid
	02	STOP	Valid	Valid	Valid	Valid
05	01	CONTROLLER DATA READ	Valid	Valid	Valid	Valid
	02	CONNECTION DATA READ	Valid	Valid	Valid	Valid
06	01	CONTROLLER STATUS READ	Valid	Valid	Valid	Valid
	20	CYCLE TIME READ	Valid	Valid	Not valid	Not valid
07	01	CLOCK READ	Valid	Valid	Valid	Valid
	02	CLOCK WRITE	Valid	Valid	Valid	Valid
09	20	MESSAGE READ	Valid	Valid	Valid	Valid
		MESSAGE CLEAR	Valid	Valid	Valid	Valid
		FAL/FALS READ	Valid	Valid	Valid	Valid
0C	01	ACCESS RIGHT ACQUIRE	Valid	Valid	Valid	Valid
	02	ACCESS RIGHT FORCED ACQUIRE	Valid	Valid	Valid	Valid
	03	ACCESS RIGHT RELEASE	Valid	Valid	Valid	Valid
21	01	ERROR CLEAR	Valid	Valid	Valid	Valid
	02	ERROR LOG READ	Valid	Valid	Valid	Valid
	03	ERROR LOG CLEAR	Valid	Valid	Valid	Valid
22	01	FILE NAME READ	Valid	Valid	Valid	Valid
	02	SINGLE FILE READ	Valid	Valid	Valid	Valid
	03	SINGLE FILE WRITE	Valid	Valid	Valid	Valid
	04	MEMORY CARD FORMAT	Valid	Valid	Valid	Valid
	05	FILE DELETE	Valid	Valid	Valid	Valid
	06	VOLUME LABEL CREATE/DELETE	Valid	Valid	Valid	Valid
	07	FILE COPY	Valid	Valid	Valid	Valid
	08	FILE NAME CHANGE	Valid	Valid	Valid	Valid
	09	FILE DATA CHECK	Valid	Valid	Valid	Valid
	0A	MEMORY AREA FILE TRANSFER	Valid	Valid	Valid	Valid
	0B	PARAMETER AREA FILE TRANSFER	Valid	Valid	Valid	Valid
	0C	PROGRAM AREA FILE TRANSFER	(see note)	Valid	Valid	Valid
23	01	FORCED SET/RESET	Not valid	Valid	Valid	Valid
	02	FORCED SET/RESET CANCEL	Not valid	Valid	Valid	Valid

Note When the PLC is in RUN mode, data transfers from files to the program area are not possible, but transfers from the program area to files are possible.

6-3-5 FINS Commands for SYSMAC LINK Units

Command code		Name	Page
04	01	DATA LINK START (see note)	112
	02	DATA LINK HALT (see note)	112
	03	RESET	112
05	01	CONTROLLER DATA READ (see note)	113
06	01	CONTROLLER STATUS READ (see note)	113
	02	NETWORK STATUS READ	115
	03	DATA LINK STATUS READ	117
08	01	INTERNODE ECHO TEST	118
	02	BROADCAST TEST RESULTS READ	119
	03	BROADCAST TEST DATA SEND	119
21	02	ERROR LOG READ (see note)	120
	03	ERROR LOG CLEAR (see note)	121

Note These commands can also be sent to the PLC.

6-3-6 Response Codes

A response code consists of two bytes. If a command is completed normally, a response code of 00 00 will be returned. The first two digits of a response code are called the main response code (MRES) and the last two digits are called the sub-response code (SRES). If command execution results in an error, one of the response codes listed in the following table will be returned. Refer to *8-1-2 Probable Causes and Remedies of Response Code Errors* for details.

MRES	Description
00	Normal completion
01	Local node error
02	Destination node error
03	Controller error
04	Not executable
05	Routing error
10	Command format error
11	Parameter error
20	Read not possible
21	Write not possible
22	Not executable in current PLC mode
23	No Unit
24	Start/Stop not possible
25	Unit error
26	Command error
30	Access right error

6-4 FINS Commands for SYSMAC LINK Units

6-4-1 DATA LINK START

Activates data links in the SYSMAC LINK Network.

This command will be completed normally when link words are allocated automatically or via data link tables only.

Command Block

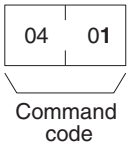

Response Block

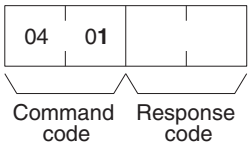

6-4-2 DATA LINK HALT

Stops data links in the SYSMAC LINK Network.

This command will be completed normally when the data link is in operation. If the data link is not in operation, an error will occur.

Command Block

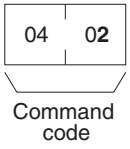

Response Block

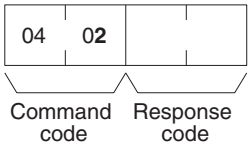

6-4-3 RESET

Resets the SYSMAC LINK Unit.

No response is returned when this command is executed.

Command Block

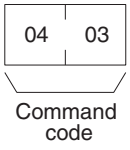

6-4-4 CONTROLLER DATA READ

Reads the following data:

- PLC model and version
- Cable type
- Node address
- Common RAM size

Command Block

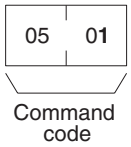

Response Block

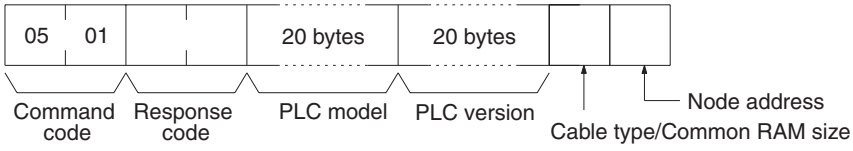

Parameters

PLC model and version (response):
Both are read in ASCII codes (20 bytes (i.e., 20 ASCII characters) max. each). If the model or version requires less than 20 characters, the remaining bytes will be filled with spaces (ASCII code 20).

Cable type and Common RAM Size:

Bit 7 will be ON if the SYSMAC LINK Network is using optical fiber cable; OFF if it is using coaxial cable. Bit 00 to 02 will be 011, indicating that the common RAM is 8 Kbytes. The common RAM is the buffer for the communications controller.

Node Address:

The node address of the SYSMAC LINK Unit from 01 to 3E (1 to 62).

6-4-5 CONTROLLER STATUS READ

Reads the status of the PLC.

Command Block

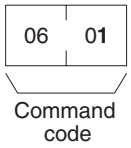

Response Block

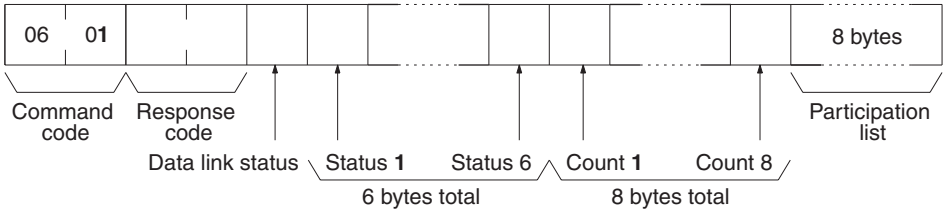

Parameters

Status (response): The operating status of the data links as follows:

00: Stopped

01: Active

Status 1 (response): Communications test status as follows:

Bit	7	6	5	4	3	**2**	**1**	0
	0	0	0	0	0	0	0	

1: Test running; 0: test stopped

Status 2 (response): Line status as follows:

Bit	7	6	5	4	3	**2**	**1**	0
	0	0	0	0		0	0	0

1: Power supplied; 0: power not supplied

Status 3 (response): Error status as follows:

Bit	7	6	5	4	3	**2**	**1**	0
	0	0	0	0	0			

1: Node address setting range error

1: Node address duplication error

1: Network parameter disagreement

Note The registered network parameters are compared to the actually network parameters upon power application the first time a Unit joins the network. If the parameters do not agree, bit 2, above, will be turned ON, but the system will not stop (the actual network parameters will automatically be registered).

Status 4 (response): The cause of communications controller errors as follows:

Bit	7	6	5	4	3	**2**	**1**	0
		0		0	0			

1: **W**atchdog timer error

1: Memory error

1: Chip error

1: Transmitter error

1: Local node echo test error

Status 5 (response): Backup status as follows:

Bit	7	6	5	4	3	2	1	0
		0	0	0				

1: Network parameter error

1: Data link table error

1: Routing table error

1: Software switch error

1: EEPROM error

Status 6 (response): Error log status as follows:

Bit	7	6	5	4	3	2	1	0
			0	0	0	0	0	0

1: Error log records present; 0: No error log records

1: Error log full (64 records)

Counts 1 through 8 (response):
Each of the following bytes provides two hexadecimal digits giving the total number of occurrences of the following items since power was turned ON. These counters will count to 255 and then remain there until power is turned OFF again.

Count 1: Number of CRC errors

Count 2: Number of times token has been resent

Count 3: Number of times token has been passed

Count 4: Number of token time-outs

Count 5: Number of polling time-outs

Count 6: Number of times polling node has changed

Count 7: Number of times participating Units have changed

Count 8: Number of times communications controller transmit/receive operation has stopped.

Participation List (response):
Bits in the last eight bytes of the response are turned ON to indicate when a node is participating in the SYSMAC LINK network. The bit turned ON for each node address is shown in the following illustration. Bits given as "–" are always zero.

Bit	7	6	5	4	3	2	1	0
Byte 1	8	7	6	5	4	3	2	1
Byte 2	16	15	14	13	12	11	10	9
Byte 3	24	23	22	21	20	19	18	17
Byte 4	32	31	30	29	28	27	26	25
Byte 5	40	39	38	37	36	35	34	33
Byte 6	48	47	46	45	44	43	42	41
Byte 7	56	55	54	53	52	51	50	49
Byte 8	–	–	62	61	60	59	58	57

6-4-6 NETWORK STATUS READ

Reads the status of the SYSMAC LINK Network.

Command Block

06	02

Command code

Response Block

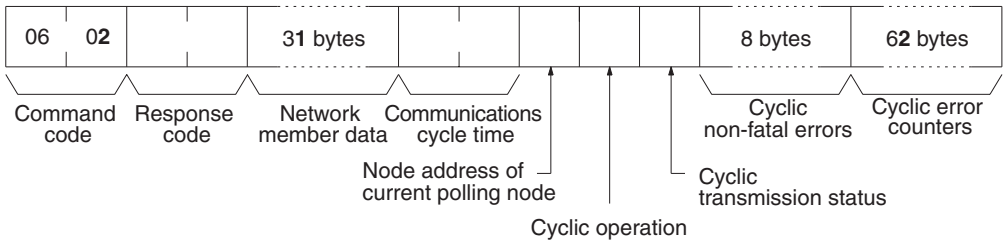

Parameters

Network member data (response): Four bits are allocated to each node address to provide information on the status of nodes in the network as shown below. The function of each of the 4 bits is shown in the diagram following the table.

Byte	Bits 4 to 7	Bits 0 to 3
Byte 1	Node address 2	Node address 1
Byte 2	Node address 4	Node address 3
Byte 3	Node address 6	Node address 5
⋮	⋮	⋮
Byte 31	Node address 62	Node address 61

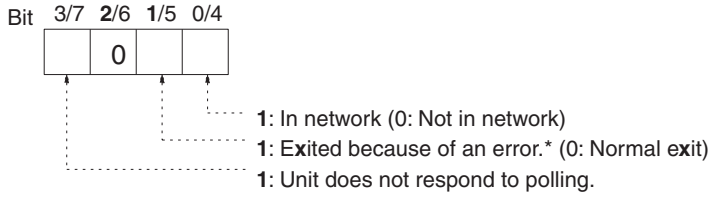

Note *Bit 1/5 is used to indicate why the node is not in the network when bit 0/4 is OFF.

Communications cycle time (response): The actual communications cycle time is provided here in 4-digit hexadecimal in increments of 100 µs.

Node address of current polling node (response): The node address of the Unit that currently is the polling node.

Cyclic operation (response): Indicates the current status of cyclic operation, as follows:

00: Stopped

01: Active

Cyclic transmission status (response): Indicates the current status of cyclic transmission, as follows:

00: No transmission

01: Transmission

Cyclic non-fatal errors (response): These eight bytes indicate nodes in which non-fatal errors occurred in cyclic transmission. When a bit in the following matrix is ON, a non-fatal error occurred in the corresponding node. Bit 0 of the first byte and bit 7 of the eighth byte are always OFF.

Bit	7	6	5	4	3	2	1	0
First byte	7	6	5	4	3	2	1	–
Second byte	15	14	13	12	11	10	9	8
Third byte	23	22	21	20	19	18	17	16
Fourth byte	31	30	29	28	27	26	25	24
Fifth byte	39	38	37	36	35	34	33	32
Sixth byte	47	46	45	44	43	42	41	40
Seventh byte	55	54	53	52	51	50	49	48
Eighth byte	–	62	61	60	59	58	57	56

Cyclic error counters (response): One of these 62 bytes is allocated to each node to indicate how many cyclic errors occurred since startup. The first byte is allocated to node address 1, the second to node address 2, etc. Each number is 2-digit hexadecimal, so 00 to FF (0 to 255 decimal) errors can be recorded for each node. If more than 255 errors occur, the number will remain at 255.

6-4-7 DATA LINK STATUS READ

Reads the status of the data link.

The various data link status information described here will not be refreshed while the data link is halted.

Command Block

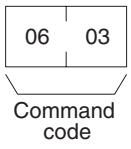

Response Block

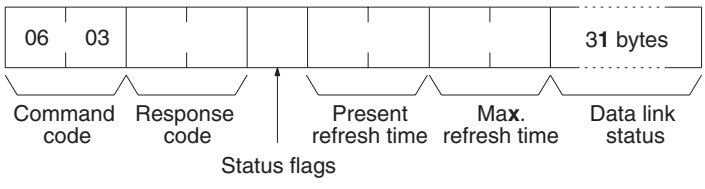

Parameters

Status flags (response): This byte contains flags providing information on overall data link status, as follows:

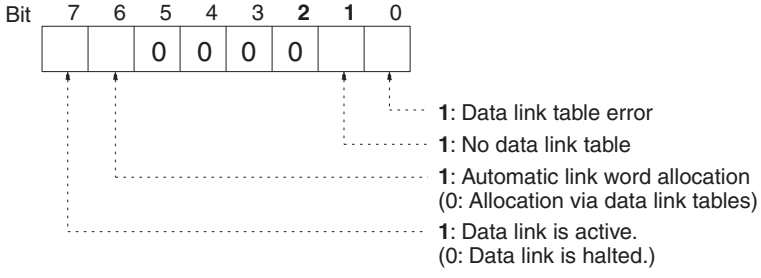

Present and Max. refresh time (response): The present and maximum data link refresh times in 4-digit hexadecimal in increments of 1 ms. The range is 0005 to 00FF (5 to 255 ms, in decimal).

Data link status (response): Four bits are allocated to each node address to provide information on the status of the data links, as shown below. The function of each of the 4 bits is shown in the diagram following the table.

Byte	Bits 4 to 7	Bits 0 to 3
Byte 1	Node address 2	Node address 1
Byte 2	Node address 4	Node address 3
Byte 3	Node address 6	Node address 5
⋮	⋮	⋮
Byte 31	Node address 62	Node address 61

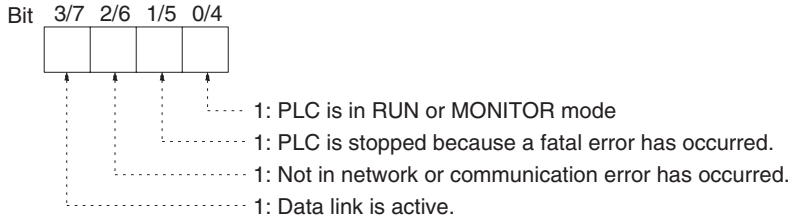

6-4-8 INTERNODE ECHO TEST

Performs an internode echo test with the indicated node.

Command Block

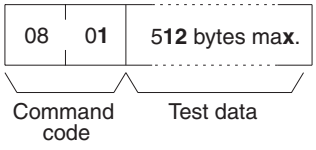

Response Block

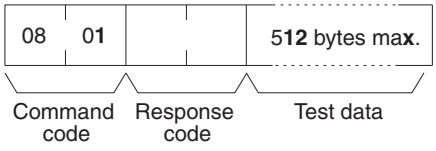

Parameters

Test data (command and response): Up to 512 bytes of test data can be included in the command. This data is transmitted to the indicated node and returned unchanged if communications are normal. If the data returned in the response differs from that transmitted in the command, an error occurred in the internode echo test.

6-4-9 BROADCAST TEST RESULTS READ

Reads the results (number of receptions for each node) of the broadcast tests carried out using the BROADCAST TEST DATA SEND command. Refer to *6-4-10 BROADCAST TEST DATA SEND* for details.

Command Block

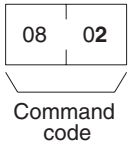

Response Block

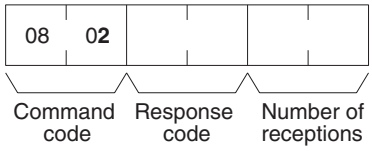

Parameters

Number of receptions (response): The number of times that the BROADCAST TEST DATA SEND command has been executed since the last BROADCAST TEST RESULTS READ command was executed.

When this command is executed, the number of receptions data stored in the destination nodes is cleared. If the number of receptions does not equal the number of times that the BROADCAST TEST DATA SEND command has been executed since the last BROADCAST TEST RESULTS READ command was executed, an error has occurred.

6-4-10 BROADCAST TEST DATA SEND

Sends the test data in the command to all nodes in the specified network. No response will be returned when this command is executed, but reception of the test data can be verified by executing the BROADCAST TEST RESULTS READ command. Refer to *6-4-9 BROADCAST TEST RESULTS READ* for details.

Command Block

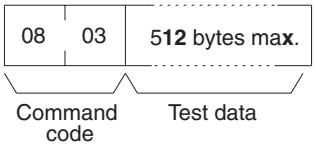

Note Make the following control data settings when executing this command:

a. Destination node address: FF (broadcast transmission)
b. Destination node unit number: FE (to SYSMAC LINK Units)
c. Response Bit (bit 13 of C+1): ON (response not returned)

6-4-11 ERROR LOG READ

Reads the error log.

Note

(1) When the error log does not have the specified number of records, all the records that have been stored will be read and an address range overflow error will result.

(2) If the data is too large and exceeds the permissible length of the response block, the part in excess will not be read and a response length overflow error will result.

Command Block

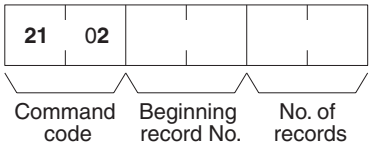

Response Block

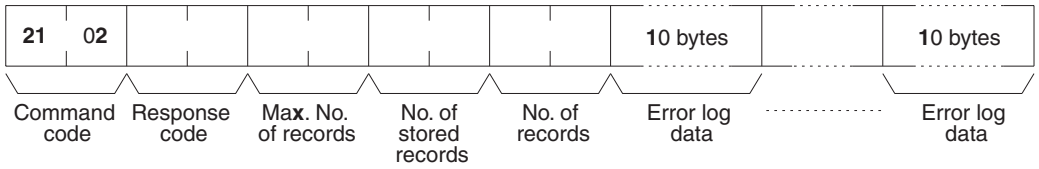

Parameters

Beginning record No. (command): The first record to be read (the first record number is 0000).

Max. No. of records (response): The maximum number of records that can be recorded. (The maximum number of records is different for the CPU Unit and the CPU Bus Units. CS-series SYSMAC LINK Units have 27 Hex (39) records.)

No. of stored records (response): The number of records that have been recorded.

No. of records (command and response): The number of records read. Specify between 0000 to 0027 (0 to 39 records). If the number of records is not specified, all records to present will be read and a normal response code will be returned. If the number of records causes the response to exceed 540 bytes, records through 540 bytes will be returned along with a normal response code.

Error log data (response): The specified error log records will be returned in sequence starting from the beginning record number. The total number of bytes required is calculated as follows:

Number of records × 10 bytes

The configuration of each error record is as follows:

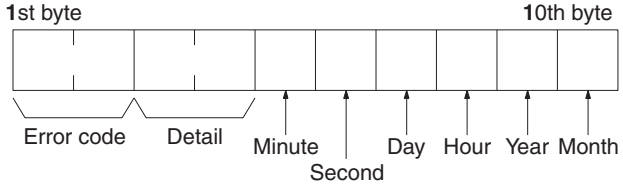

Each data includes the second, minute, hour (0 to 23), date, month, and year (the rightmost two digits) in BCD specifying the time that the error occurred.

6-4-12 ERROR LOG CLEAR

Clears all error log records.

Command Block

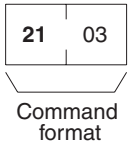

Response Block

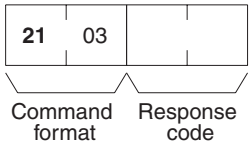

SECTION 7
Remote Monitoring and Programming

Information on remote programming and monitoring is provided in this section.

7-1 Remote Programming and Monitoring 124
7-1-1 Local Networks 124
7-1-2 Remote SYSMAC LINK Networks 124
7-1-3 Remote Programming and Monitoring Different Networks 125

7-1 Remote Programming and Monitoring

A remote PLC can be programmed and monitored across a network from a Programming Device connected to a PLC.

7-1-1 Local Networks

A CX-Programmer connected to a CS-series, CVM1, CV-series, or C200HX/HG/HE CPU Unit can program and monitor a CPU Unit on the same network. Programming and monitoring are possible, including CPU Units that are different from the one to which the Programming Device is connected.

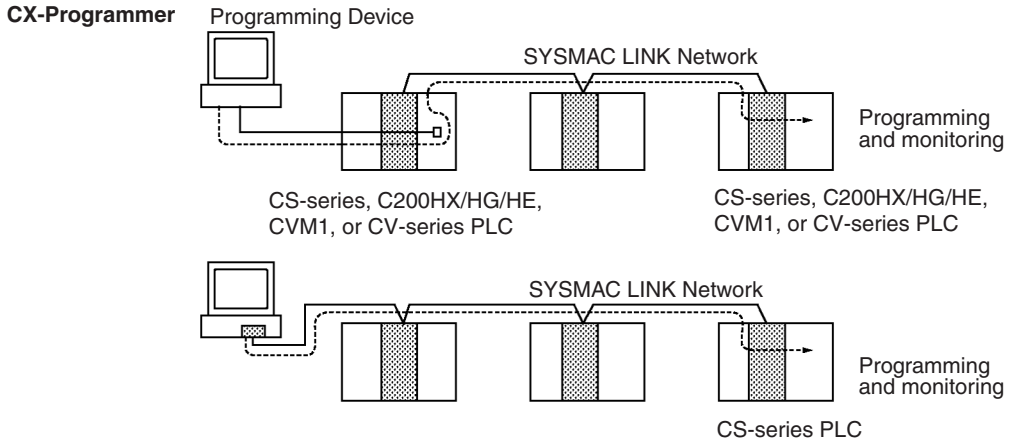

Note Remote programming and monitoring are possible from a computer using the CX-Programmer as a node.

7-1-2 Remote SYSMAC LINK Networks

A CX-Programmer connected to a CS-series, C200HX/HG/HE, or CV-series CPU Unit can program and monitor any other PLC on another SYSMAC LINK Network. Other types of PLC, different from the one to which the CX-Programmer is connected can also be programmed or monitored on remote networks.

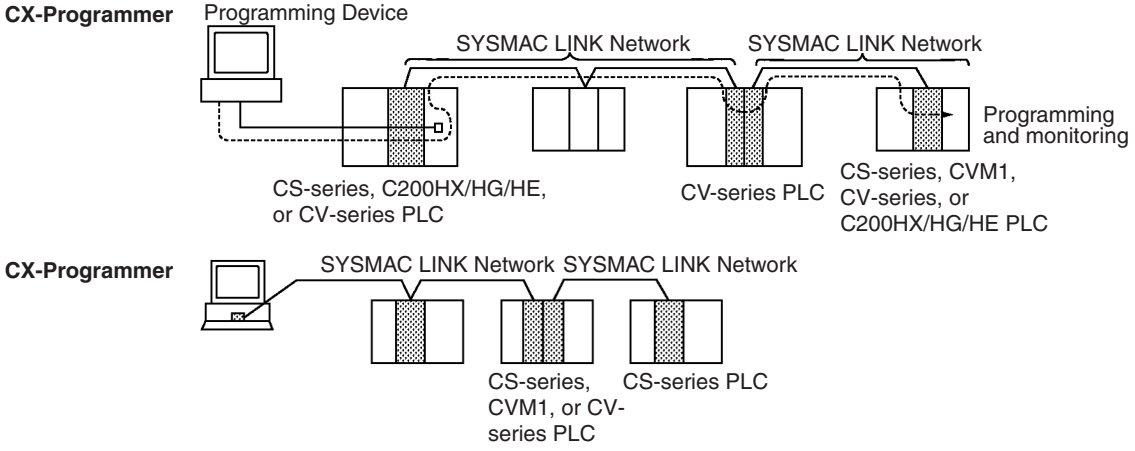

Note Remote programming and monitoring are possible from a computer using the CX-Programmer as a node. With the C200H-SLK21 and C1000H-SLK21, however, remote programming and monitoring are not possible with the CX-Programmer. Refer to *9-3 Using the C200H-SLK21 or C1000H-SLK21* for details.

7-1-3 Remote Programming and Monitoring Different Networks

You can program and monitor CPU Units on different networks (Ethernet, SYSMAC NET, and Controller Link) from a CX-Programmer connected to a CS-series, CVM1/CV-series, or C200HX/HG/HE-series CPU Unit. CS-series, CVM1, and CV-series PLCs must be used as the bridges between the networks.

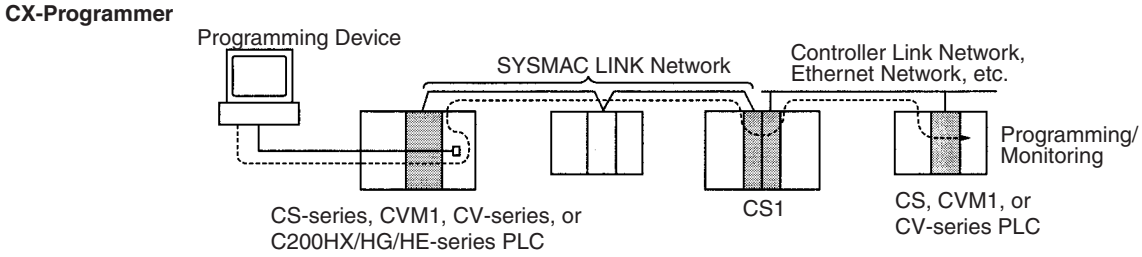

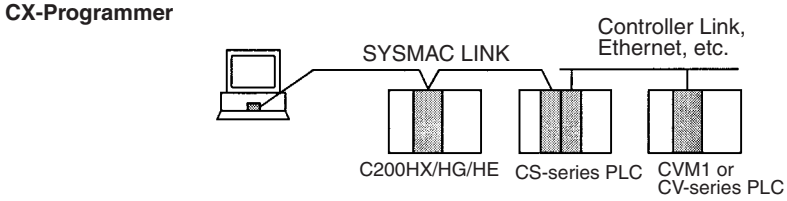

Note Remote programming and monitoring is possible from computer nodes.

Note When performing remote programming or monitoring from CX-Programmer over a SYSMAC LINK Network, set the frame length to a maximum of 542 bytes using the network settings of the PLC connected to CX-Programmer. If the frame length is set to 543 bytes or over, the user program and other data cannot be transferred.

SECTION 8
Troubleshooting

Information to help identify and correct errors that might occur is provided in this section.

8-1 Troubleshooting 128
8-1-1 Error Indications 128
8-1-2 Probable Causes and Remedies of Response Code Errors 131
8-2 Error Log 137
8-2-1 Error Log Table 137
8-2-2 Error Codes 138
8-2-3 Reading and Clearing Error Logs 142
8-3 Polling Node Backup 143
8-4 Node Bypass 143

8-1 Troubleshooting

This section explains errors that may occur and how to solve them.

8-1-1 Error Indications

You can check possible system errors using the indicators on the front panel of the SYSMAC LINK Unit. The tables below list error conditions, their probable cause, and possible remedies.

RUN, ERC, ERH, and INS Indicators

Indicators				CPU Bus Unit CIO Area error information	Error log	Probable cause	Remedy
RUN	ERC	ERH	INS				
Lit	Not lit	Not lit	Lit	---	---	Unit is participating in network normally.	---
Not lit	Not lit	Not lit	Not lit	---	---	Power to PLC is turned OFF.	Check the voltage, and check that power is being supplied normally.
				---	---	SYSMAC LINK Unit mounting is loose.	Firmly fix the SYSMAC LINK Unit to the Backplane.
				---	---	SYSMAC LINK Unit mounting position is incorrect.	Refer to *2-3 Mounting to Backplanes*, then mount the Unit correctly.
				---	---	SYSMAC LINK Unit is faulty.	Replace the SYSMAC LINK Unit if the indicators fail to light even when mounted to another PLC.
Not lit	Lit	Not lit	Not lit	---	---	SYSMAC LINK Unit is broken.	Replace the SYSMAC LINK Unit if the ERC indicator fails to light even when mounted to another PLC.
				Both bit 08 (node address setting error) and bit 15 (error log information) are ON.	0214 Hex	Node address setting is out of range.	Correct the node addresses to within the range of 1 to 62, then turn ON the power again.
---	Lit	Not lit	Not lit	Both bit 01 (data link table error) and bit 15 (error log information) are ON.	0210 Hex	Communications controller error.	Replace the SYSMAC LINK Unit.
Lit	Lit	---	Not lit	Both bit 09 (duplicate node address setting error) and bit 15 (error log information) are ON.	0211 Hex	Table contains duplicate node addresses.	Change the settings so that there are no duplicate node addresses in the same network, then turn ON the power again.
						Wrong connection to network (optical fiber only).	Check the network, and reconnect the cables correctly.
Not lit	Not lit	Lit	Not lit	---	---	The I/O table in the CPU Unit has not been created, or contains an error.	Set the I/O table correctly.
				---	---	Table contains duplicate unit numbers.	Change the settings so that there are no duplicate unit numbers at the same PLC (including any on CS-series Expansion Racks), then turn ON the power again.

Indicators				CPU Bus Unit CIO Area error information	Error log	Probable cause	Remedy
RUN	ERC	ERH	INS				
Lit	---	Lit	---	Bit 15 (error log information) is ON.	0001 Hex	CPU Unit error.	Refer to the PLC operation manual, and clear the error. If the error reoccurs, replace the CPU Unit.
				Both bit 00 (network parameter error) and bit 15 (error log information) are ON.	0012 Hex	CPU Bus Unit settings area network parameters data is corrupted.	Correct the network parameters. If the error reoccurs, replace the PLC CPU Unit.
					021A Hex	Network parameter settings contain an error, or the local node address exceeds the network parameters maximum node address.	Correct the network parameters correctly.
				Both bit 01 (data link table error) and bit 15 (error log information) are ON.	0012 Hex	PLC Bus Unit system settings area data link tables data is corrupted.	Correct the data link tables. If the error reoccurs, replace the PLC CPU Unit.
					021A Hex	The data link table settings contain an error.	Correct the data link tables, or delete the data link tables if not using them.
				Both bit 02 (routing table error) and bit 15 (error log information) are ON.	0012 Hex	PLC parameter area routing tables data is corrupted.	Reset the routing tables. If the error reoccurs, replace the PLC CPU Unit.
					021A Hex	The routing table settings contain an error.	Correct the routing tables, or delete the routing tables if not using them.
Lit	---	---	Not lit	---	---	Terminating resistors are not mounted correctly (coaxial only).	Mount terminating resistors on both end nodes of the SYSMAC LINK network.
				---	---	The cable is not connected correctly.	Connect the cable connections, then reconnect the cable correctly.
				---	---	Node address exceeds network parameters maximum node address.	Either correct the network parameters maximum node address using CX-Net in CX-Programmer, or set the node address to within the maximum node address.
				---	---	No other nodes exist.	Be sure that there are a minimum of two active nodes in the network.
				---	---	No node is set as the polling node.	Set a Unit as the polling node.

Note Calculate the location of the error information in the CPU Bus Unit as follows:

CIO 1500 + unit number x 25 + 1 word.

LNK Indicator

Data Links Won't Start

For the data links to operate, first the SYSMAC LINK Units must be operating and participating in the network. First, check the LNK indicator status by referring to *RUN, ERC, ERH, and INS Indicators* above, and then use the following table.

LNK indicator	Probable cause	Remedy
Lit	Data links operating normally.	---
Not lit	The local node has not been entered in the refresh parameters in the data link tables.	Add the local node to the refresh parameters, then start the data links.
Flashing	An error has occurred in the CPU Unit of the startup node.	Refer to the PLC operation manual, eliminate the error, and start the data links. If the error reoccurs, replace the CPU Unit.
	The data link tables contain an error.	Correct the data link tables, and restart the data links.
Rapid flashing	Communications cycle time in the data link tables is is too short.	Either use the automatic setting or increase the setting manually (see note).

Note In this case, the error log (error code 021D Hex) will be stored. Refer to *8-2 Error Log* for details.

Nodes Not Participate in Data Links

For nodes to participate in the data links, first the SYSMAC LINK Units must be operating and participating in the network. First, check the LNK indicator status by referring to *RUN, ERC, ERH, and INS Indicators* above, and then use the following table.

LNK indicator	Probable cause	Remedy
Lit	Data links operating normally.	---
Not lit	The local node has not been entered in the refresh parameters in the data link tables.	Add the local node to the refresh parameters, then restart the data links.
Flashing	The data link tables contain an error.	Correct the data link tables, and then start the data links.
Rapid flashing	Communications cycle time in the data link tables is is too short.	Either use the automatic setting or increase the setting manually (see note).

Note In this case, the error log (error code 021D Hex) will be stored. Refer to *8-2 Error Log* for details.

8-1-2 Probable Causes and Remedies of Response Code Errors

The table below lists the probable causes of response code errors when using the SEND(90), RECV(98), and CMND(490) instructions. (Refer to *6-2-4 Communications Ports* for details on where the SEND(90), RECV(98), and CMND(490) instructions response codes are stored.)

The 6th, 7th, and 15th bits of the response codes may be ON. When the 15th bit is ON, a network relay error has occurred. Refer to *Network Relay Errors* below for remedies. When the 6th or 7th bit is ON, an error has occurred in the destination CPU Unit. Refer to the CPU Unit operation manual, and clear the error in the destination CPU Unit. The following table gives the meanings of the response codes.

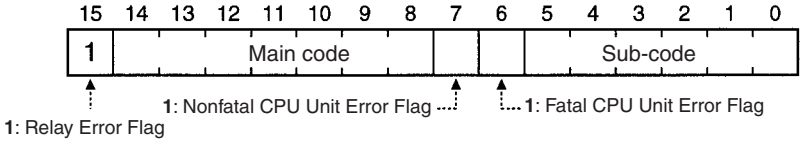

Upon receipt of some commands, the destination node will issue a request to another node; the other node is referred to as the third node.

Main code	Sub-code	Probable cause	Remedy
00: Normal completion	00	---	---
	01	Service was interrupted	Check the contents of the destination transmission area of third node.
01: Local node error	01	Local node not part of Network	Add to Network.
	02	Token time-out, node address too high	Set the local node's node address below the maximum node address
	03	Number of transmit retries exceeded	Check communications with internode echo test. If the test fails, check network.
	04	Maximum number of frames exceeded	Either check the execution of events in the network and reduce the number of events occurring in one cycle, or increase the maximum number of frames.
	05	Node address setting error (range)	Make sure the node address is within the specified range and that there are no duplicate node addresses.
	06	Node address duplication error	Make sure that there are no duplicate node addresses.
02: Destination node error	01	Destination node not part of Network	Add to Network.
	02	No node with the specified node address	Check the destination node's node address.
	03	Third node not part of Network	Check the third node's node address.
	04	Busy error, destination node busy	Increase the number of transmit retry attempts or re-evaluate the system so that the destination node is not so busy receiving data.
	05	Response time-out, message packet was corrupted by noise	Increase the number of transmit retry attempts. Perform an internode echo test to check noise level.
		Response time-out, response watchdog timer interval too short	Increase the value for the response watchdog timer interval.

Main code	Sub-code	Probable cause	Remedy
03: Communications controller error	01	Error occurred in the communications controller, ERC indicator is lit	Take corrective action, referring to communications controller errors and remedies table at end of this section.
	02	CPU error occurred in the PLC at the destination node	Clear the error in the CPU (refer to the PLC's operation manuals).
	04	Node address setting error	Make sure the node address is within specified range and that there are no duplicate node addresses.
04: Not executable	01	An undefined command has been used.	Check the command code.
	02	Cannot process command because the specified unit model or version is wrong.	Check the unit model and version.
05: Routing error	01	Destination node address is not set in the routing table.	Set the destination node address in the routing table.
	02	Routing table is not registered.	Set the source nodes, destination nodes, and relay nodes in the routing table.
	03	Routing table error	Set the routing table correctly.
	04	The maximum number of relay nodes (2) was exceeded in the command.	Redesign the network or reconsider the routing table to reduce the number of relay nodes in the command.
10: Command format error	01	The command is longer than the max. permissible length.	Check the command format of the command and set it correctly.
	02	The command is shorter than min. permissible length.	Check the command format of the command and set it correctly.
	03	The designated number of data items differs from the actual number.	Check the number of items and the data, and make sure that they agree.
	04	An incorrect command format has been used.	Check the command format of the command and set it correctly.
	05	An incorrect header has been used. (The local node's relay table or relay node's local network table is wrong.)	Set the routing table correctly.
11: Parameter error	01	A correct memory area code has not been used or Expansion Data Memory is not available.	Check the command's memory area code and set the appropriate code.
	02	The access size specified in the command is wrong, or the first address is an odd number.	Set the correct access size for the command.
	03	The first address is in an inaccessible area.	Set a first address that is in an accessible area.
	04	The end of specified word range exceeds the acceptable range.	Check the acceptable limits of the data area and set the word range within the limits.
	06	A non-existent program number has been specified.	Check the program number and be sure that it is set correctly.
	09	The sizes of data items in the command block are wrong.	Check the command data and be sure that the sizes of the data items are correct.
	0A	The IOM break function cannot be executed because it is already being executed.	Either abort the current IOM break function processing, or wait until it is completed and execute the command.
	0B	The response block is longer than the max. permissible length.	Check the command format and set the number of items correctly.
	0C	An incorrect parameter code has been specified.	Check the command data and reenter it correctly.

Main code	Sub-code	Probable cause	Remedy
20: Read not possible	02	The program area is protected.	Execute the instruction again after issuing the PROGRAM AREA PROTECT CLEAR command.
	03	The registered table does not exist or is incorrect.	Set or reset the registered table.
	04	The corresponding data does not exist.	---
	05	A non-existing program number has been specified.	Check the program number and be sure that it is set correctly.
	06	A non-existing file has been specified.	Check whether the correct file name was used.
	07	A verification error has occurred.	Check whether the memory contents are correct and replace if incorrect.
21: Write not possible	01	The specified area is read-only or is write-protected.	If the specified area is read-only, the write cannot be performed. If it is write-protected, turn off the write-protect switch and execute the instruction again.
	02	The program area is protected.	Execute the instruction again after issuing the PROGRAM AREA PROTECT CLEAR command.
	03	The number of files exceeds the maximum permissible.	Write the file(s) again after erasing unneeded files, or use a different disk or Memory Card that has free space.
	05	A non-existing program number has been specified.	Check the program number and be sure that it is set correctly.
	06	A non-existent file has been specified.	---
	07	The specified file already exists.	Change the name of the file and execute the instruction again.
22: Not executable in current mode	01	The mode is wrong (executing).	Check the operating mode.
	02	The mode is wrong (stopped).	Check the operating mode.
	03	The PLC is in PROGRAM mode.	Check the PLC's mode.
	04	The PLC is in DEBUG mode.	Check the PLC's mode.
	05	The PLC is in MONITOR mode.	Check the PLC's mode.
	06	The PLC is in RUN mode.	Check the PLC's mode.
	07	The specified node is not the control node.	Check which node is the control node.
	08	The mode is wrong and the step cannot be executed.	Check whether the step has active status or not.
23: No Unit	01	A file device does not exist where specified.	The Memory Card or disk is not installed.
	02	The specified memory does not exist.	Check the specifications of the installed file memory.
	03	No clock exists.	Check the model number.
24: Start/stop not possible	01	The data link table either hasn't been created or is incorrect.	Set the data link table correctly.

Main code	Sub-code	Probable cause	Remedy
25: Unit error	02	Parity/checksum error occurred because of incorrect data.	Transfer correct data into memory.
	03	I/O setting error (The registered I/O configuration differs from the actual.)	Either change the actual configuration to match the registered one, or generate the I/O table again.
	04	Too many I/O points	Redesign the system to remain within permissible limits.
	05	CPU bus error (An error occurred during data transfer between the CPU and a CPU Bus Unit.)	Check the unit and cable connections and issue the ERROR CLEAR command.
	06	I/O duplication error (A rack number, unit number, or I/O word allocation has been duplicated.)	Check the system's settings and eliminate any duplication.
	07	I/O bus error (An error occurred during data transfer between the CPU and an I/O Unit.)	Check the unit and cable connections and issue the ERROR CLEAR command.
	09	SYSMAC BUS/2 error (An error occurred during SYSMAC BUS/2 data transfer.)	Check the unit and cable connections and issue the ERROR CLEAR command.
	0A	Special I/O Unit error (An error occurred during CPU Bus Unit data transfer.)	Check the unit and cable connections and issue the ERROR CLEAR command.
	0D	Duplication in SYSMAC BUS word allocation.	Check and regenerate the I/O table.
	0F	A memory error has occurred in internal memory, in the Memory Card, or in Expansion DM during the error check.	If the error occurred in internal memory or the EM Unit, correct the data in the command an execute it again. If the error occurred in a Memory Card or EM used for file memory, the file data has been corrupted. Execute the MEMORY CARD FORMAT command. If the above remedies do not eliminate the error, replace the faulty memory.
	10	Terminator not connected in SYSMAC BUS System.	Connect the terminator correctly.

Main code	Sub-code	Probable cause	Remedy
26: Command error	01	The specified area is not protected. This response code will be returned if an attempt is made to clear protection on an area that is not protected.	The program area is not protected, so it is not necessary to clear protection.
	02	An incorrect password has been specified.	Specify a password that is registered.
	04	The specified area is protected.	Execute the command again after the PROGRAM AREA PROTECT CLEAR command.
	05	The service is being executed.	Execute the command again after the service has been completed or aborted.
	06	The service is not being executed.	Execute the service if necessary.
	07	Service cannot be executed from local node because the local node is not part of the data link.	Execute the service from a node that is part of the data link.
	08	The communications cycle time in the data link table is too short. (The LNK indicator will be flashing rapidly.)	Either use the automatic setting or increase the setting manually.
	09	Service cannot be executed because the necessary settings have not been made in the command data.	Check the command format and make the necessary settings.
	0A	The specified action or transition number has already been registered.	Execute the command again using an action or transition number that has not been registered.
	0B	Cannot clear error because the cause of the error still exists.	Eliminate the cause of the error and execute the ERROR CLEAR command.
30: Access right error	01	The access right is held by another device.	Execute the command again after the access right has been released. (The command can be executed after the ACCESS RIGHT FORCED ACQUIRE or ACCESS RIGHT RELEASE command is completed. Releasing the access right might affect processes in progress at the node that held the access right.)

Network Relay Errors

For network relay errors using SEND(90) or RECV(98), check the path of the command using the routing tables and the nature of the error using the response code to eliminate the cause of the error.

For network relay errors using CMND(490), the location of the relay error is recorded in the second and third words of the response, as shown below.

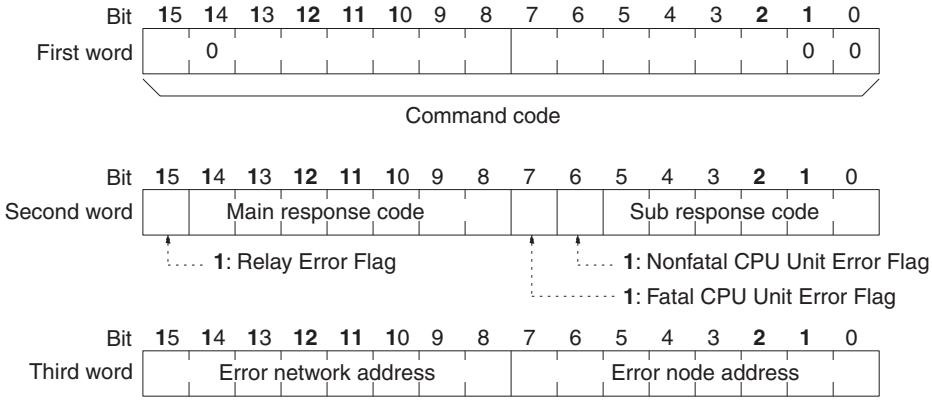

Network error address: 00 to 7F (0 to 127)

Node error address

SYSMAC LINK: 01 to 3E (1 to 62)

Controller Link: 01 to 20 (1 to 32)

Ethernet: 01 to 7E (1 to 126)
SYSMAC NET: 01 to 7E (1 to 126)

Relay Errors

A relay error is caused when a command fails to reach the Unit to which it has been sent. A relay error can be caused either by data failing to be passed between Communications Units connected over a network (see example 1), or by data being passed from a Communications Unit to a Unit that is not a Communications Unit (e.g., to a CPU Unit) (see example 2). A relay error may also occur if the destination node or the next relay node does not exist.

Example 1:
Data fails to be passed between Communications Units due to a routing table error.

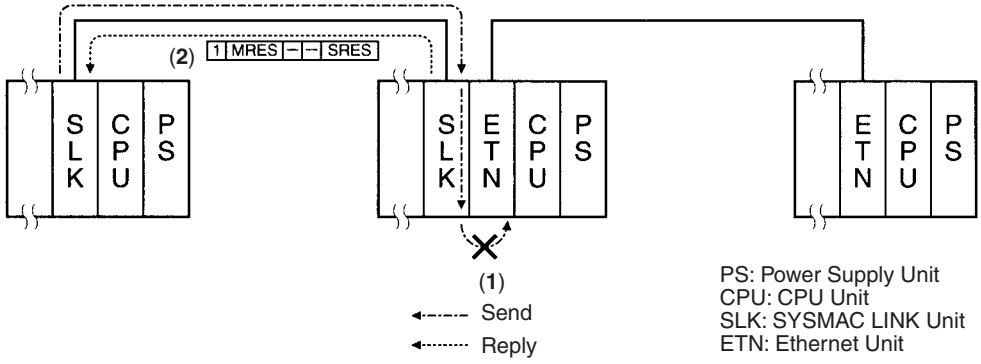

Example 2:
Data fails to be passed from a Communications Unit to the CPU Unit due to the Communications Unit being offline from servicing.

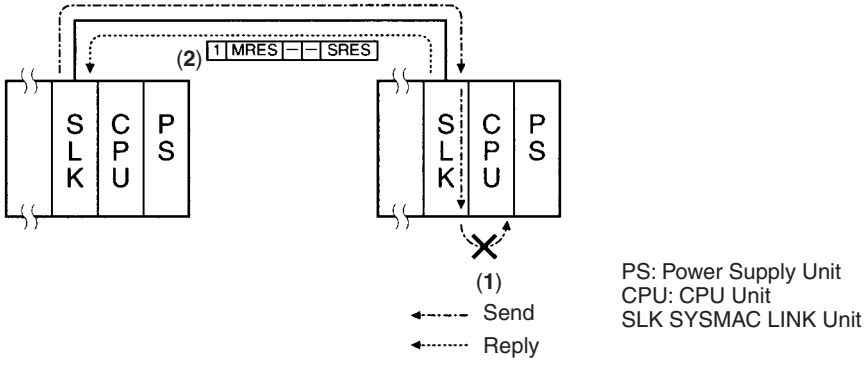

Example 3:
Destination node or relay node does not exist.

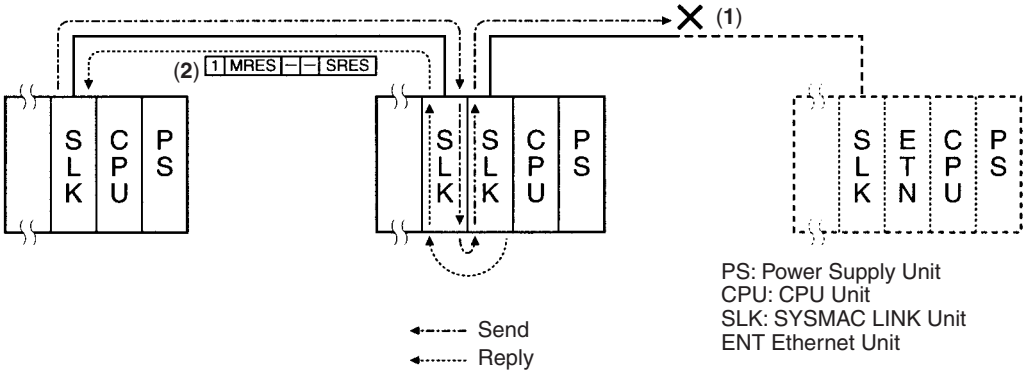

1,2,3... 1. Send data fails to be passed.
2. Relay error and response code returned to source.

Check the node with the error, then examine the error itself using the response code, then remedy the problem.

8-2 Error Log

The error log records errors that occur in the SYSMAC LINK Unit and the time they occur. The error log can be read or cleared using the CX-Net, or the message service (FINS commands for the SYSMAC LINK Unit.)

8-2-1 Error Log Table

Errors are recorded in an error log table in the Unit's RAM, with one record for each error and a maximum of 39 records.

Errors of significance are also recorded in the Unit's EEPROM so that when the power to the Unit is turned OFF or reset, a record of the error will remain. (The error log table in EEPROM automatically reads the Unit's RAM when the power is turned ON again.)

Item	Specification
No. of records	39 max.
Data code	Binary (Times are in BCD)
Length of each record	10 bytes
Configuration of records	Error code: 2 bytes (Refer to page 138) Detail code: 2 bytes (Refer to page 138) Time: 6 bytes (Refer to the following page)
Record order	From the oldest record to the most recent.

If the number of records exceeds 39, the oldest record will be deleted and the most recent error recorded.

Error Log Table Configuration

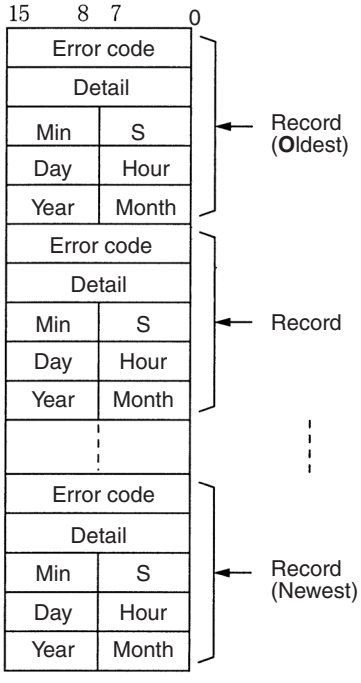

Time Information

The time is recorded in BCD with one byte each for the year (the rightmost two digits), month, day, hour, seconds, and minutes of the time the error occurred.

Note

(1) The PLC's time information can be read and used in the SYSMAC LINK Unit. When the time cannot be read from the PLC, all error log times will be set to 0. This can occur for PLC startup errors, unit number errors, CPU Unit errors, or PLC model errors. When error logs without times are read from the CX-Net, they will be dated 0 s, 0 min, 0 hr, 0 day, 0 month, 2000.

(2) When replacing the battery for CS-series PLCs, it will be necessary to switch the power supply ON and reset the internal clock. If the internal clock is not reset, time information in the error log will not be recorded correctly.

(3) The time information will be all zeros for CQM1H-series PLCs unless a Memory Cassette with a clock is mounted in the CPU Unit. The time information will be all zeros in the year 2000 if it is read from Support Software.

8-2-2 Error Codes

The following table lists the error codes (in 4-digit hexadecimal) and the contents of the errors.

Error code	Contents	Detail code		Correction	Written to EEPROM
		1st byte	2nd byte		
0001 Hex	PLC watchdog timer error	00 Hex	00 Hex	Replace PLC's CPU Unit.	Yes
0002 Hex	PLC service monitor error	Monitor time (unit: ms)		Check operating environment.	Yes
0004 Hex	CPU Bus Unit ID number error	00 Hex	00 Hex	Check I/O Connecting Cables.	Yes
0006 Hex	CPU Unit error	Bit 11: No relevant Unit in I/O table. Bit 12: Hardware test unit number recognized. Bit 13: Incorrect unit number. Bit 14: Duplicated unit number.		Check the Unit number settings. Recreate the I/O table.	Yes
000E Hex	I/O Bus error	00 Hex fixed	00 Hex fixed	Check the operating environment.	Yes
000F Hex	PLC initialization error			Check the operating environment.	Yes
0010 Hex	PLC Setup exceeds capacity			Reduce the number of CPU Bus Units mounted on each CPU Unit by one.	Yes
0011 Hex	PLC initialization error (Time out)			Check the operating environment.	Yes

Error code	Contents	Detail code		Correction	Written to EEPROM
		1st byte	2nd byte		
0012 Hex	CPU Unit memory error	01 Hex: Read error 02 Hex: Write error	01 Hex: Data link table 02 Hex: Network parameters 03 Hex: Routing table 04 Hex: PLC Setup Area	Set the appropriate data.	Yes
0013 Hex	CPU Unit write-protected			Release the CPU Unit write protection.	Yes
0101 Hex	Transmission failed; local node not in Network	**Command block** Bits 0 to 7: Source node address Bits 8 to 14: Source Network address Bit 15: OFF **Response block** Bits 0 to 7: Destination node address Bits 8 to 14: Destination Network address Bit 15: ON (1st byte: bits 8 to 15; 2nd byte, bits 0 to 7)		Refer to page *8-1-1 Error Indications* and place the local node into Network.	No
0103 Hex	Transmission failed; retry count exceeded			Using the CX-Net or FINS commands, run echoback tests and check operating environment if errors occur.	No
0104 Hex	Transmission failed; maximum number of frames exceeded.			Reduce the number of events per communications cycle or increase the maximum number of network parameter frames.	No
0105 Hex	Transmission failed; node address incorrect			Check node address settings to be sure they are within range and unique.	No
0106 Hex	Transmission failed; redundant node address			Correct node addresses so that they are unique within the same Network.	No
0107 Hex	Transmission failed; destination node not in Network			Refer to *8-1-1 Error Indications* and place destination node into Network.	No
0108 Hex	Transmission failed; specified Unit does not exist			Check the unit address and unit number of destination.	No

Error code	Contents	Detail code		Correction	Written to EEPROM
		1st byte	2nd byte		
0109 Hex	Transmission failed; destination busy	**Command block** Bits 0 to 7: Source node address Bits 8 to 14: Source Network address Bit 15: OFF **Response block** Bits 0 to 7: Destination node address Bits 8 to 14: Destination Network address Bit 15: ON (1st byte: bits 8 to 15; 2nd byte, bits 0 to 7)		Set the data link tables communications cycle time automatically, or increase the settings manually.	No
010A Hex	Transmission failed; communications controller error			Conduct an echoback test and if the effects of noise are considerable, reconsider the operating environment. Restart the SYSMAC LINK Unit. If the error occurs again, replace the Unit.	Yes
010B Hex	Transmission failed; PLC error			Refer to the PLC operating manual. If the error occurs again, replace the PLC.	No
010C Hex	Transmission failed; unit number incorrect			Check unit number settings to be sure they are within range and unique.	No
010D Hex	Transmission failed; destination address incorrect			Check routing tables.	No
010E Hex	Transmission failed; routing tables not registered			Check routing tables.	No
010F Hex	Transmission failed; routing table error			Check routing tables.	No
0110 Hex	Transmission failed; too many relay points			Check routing tables and system configuration. Do not try to access Networks separated by more than one other Network.	No
0111 Hex	Transmission failed; command packet too long			Be sure to use the FINS command format.	No
0112 Hex	Transmission failed; header error.			Be sure to use the correct FINS command format.	No
0113 Hex	Transmission failed; I/O setting error			Check I/O table accuracy.	No
0114 Hex	Transmission failed; CPU bus error			Check Unit and cable connections and clear error.	No
0115 Hex	Transmission failed; redundant I/O allocations			Check unit numbers for redundancy within the same PLC.	No
0116 Hex	Transmission failed; CPU Bus Unit error			Check Unit and cable connections and clear error.	No

Error code	Contents	Detail code		Correction	Written to EEPROM
		1st byte	2nd byte		
0117 Hex	Internal buffer full	**Command block** Bits 0 to 7: Source node address Bits 8 to 14: Source Network address Bit 15: OFF **Response block** Bits 0 to 7: Destination node address Bits 8 to 14: Destination Network address Bit 15: ON (1st byte: bits 8 to 15; 2nd byte, bits 0 to 7)		Increase number of retries or reconfigure system to distribute load.	No
0118 Hex	Illegal packet discarded			Check for nodes sending illegal packets.	Yes
0206 Hex	Number of participating nodes decreased (local node still participating)	Network parameters maximum node address	Number of non-participating nodes	Check network parameters, node participation, cables, and terminating resistance.	No
0207 Hex	Number of participating nodes decreased (local node not participating)				No
0208 Hex	Polling node changed	Address of previous polling node	Address of new polling node	Check previous polling node.	No
0209 Hex	Network parameter disagreement error	00 Hex	Address of polling node	Using the CX-Net, check network parameters.	Yes
020C Hex	Time out with token	00 Hex	Error status (see note)	Check network parameters, node participation, cables, and terminating resistance.	No
0210 Hex	Communications controller send error	00 Hex	Error status (see note)	Replace the SYSMAC LINK Unit.	Yes
0211 Hex	Duplicate address error	00 Hex	Local node address	Set so that each node address is used only once within the same Network.	No
0214 Hex	Node address setting error	Not specified		Check the node address settings and correct them.	Yes
0216 Hex	Backup power supply error (Optical Units only)	00 Hex fixed	Backup power supply error distinction: 01 Hex: OFF to ON 02 Hex: ON to OFF	Check the status of the backup power supply and power supply cables.	Yes
021A Hex	Set table logic error	00 Hex	01 Hex: Network parameters 02 Hex: Data link tables 03 Hex: Routing tables	Remake and set the appropriate data.	Yes
021B Hex	Hardware error	00 Hex	Error status (see note)	Replace the SYSMAC LINK Unit.	No

Error code	Contents	Detail code		Correction	Written to EEPROM
		1st byte	2nd byte		
021C Hex	Data link error inactive	Not set		Restart the SYSMAC LINK Unit.	Yes
021D Hex	Data link table communications cycle time setting error	Communications cycle time set in the data link status (Unit: ms, 2-digit hexadecimal)	Minimum possible communications cycle time setting (Unit: ms, 2-digit hexadecimal)	Set the data link tables communications cycle time automatically, or increase the settings manually.	Yes
0220 Hex	Participating nodes reduced (removed node information)	Node 1 to 16 removed (correspond to bits 0 to 15)		Check the network parameters, cables, and terminal resistance settings.	Yes
0221 Hex		Node 17 to 32 removed (correspond to bits 0 to 15)			
0222 Hex		Node 33 to 48 removed (correspond to bits 0 to 15)			
0223 Hex		Node 49 to 62 removed (correspond to bits 0 to 13)			
0300 Hex	Packet discarded	Not set		Conduct an echoback test and find the cause of the error.	No
0601 Hex	Unit error	Not set		Check the operating environment.	Yes

Note

(1) Errors indicated by error codes 0101 to 0116 Hex are logged only when the frame was discarded because transmission was impossible.

(2) Errors indicated by error codes 0220 to 0223 Hex are logged at the same time as error code 0206 or 0207 Hex (participating nodes reduced). You can determine the nodes removed from the network. For example, if node 16 is removed, the following error codes will be generated.

Error code	Information	Meaning
0206 Hex	3E01 Hex	Single node removed from system.
0221 Hex	0001 Hex	Node 16 removed from system.

Error Status

The status of each bit indicates that an error has occurred as given in the diagram below.

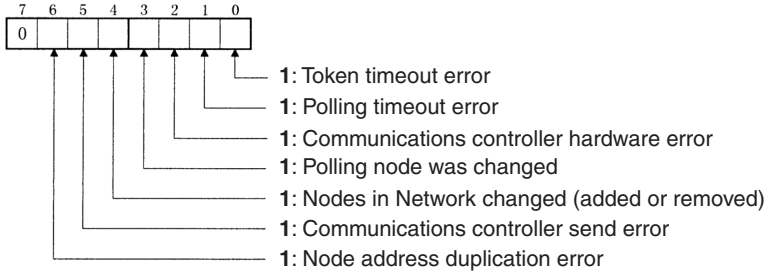

8-2-3 Reading and Clearing Error Logs

Error logs can be read or cleared using the CX-Net, or the message service. The following commands can be used for the message service.

Reading an Error Log

Send the ERROR LOG READ FINS command (command code 2102) to the appropriate node. Refer to *6-4-11 ERROR LOG READ*.

Clearing an Error Log

Send the ERROR LOG CLEAR FINS command (command code 2103) to the appropriate node. Refer to *6-4-12 ERROR LOG CLEAR*.

8-3 Polling Node Backup

If the polling node on the SYSMAC LINK Network has an error, the polling node backup function of the SYSMAC LINK Unit will reconstruct the network so that another Unit takes its place as the polling node. Refer to the following diagram. The initial polling node is the Unit assigned node address 1. If the Unit with node address 1 has an error, the node that has the next smallest node address will automatically become the new polling node.

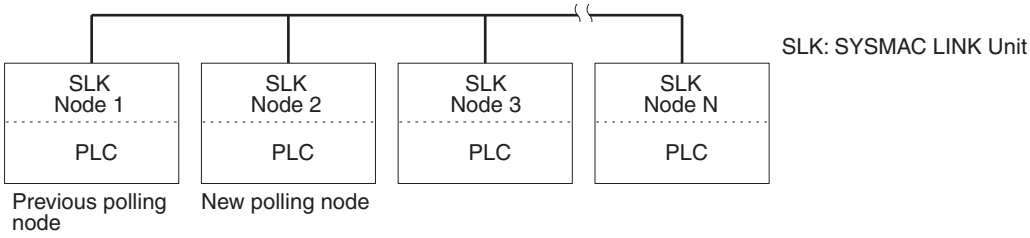

Note While the network is being reconstructed, no communications are possible. If the data link function was active, all data will remain at its present values. When the network has been reconstructed, the data links will be reactivated. The approximate time required for the reconstruction of the network can be computed as follows:
(Address of new polling node + 1) x 20 ms + maximum node address x 1 ms

8-4 Node Bypass

Optical SYSMAC LINK networks can be connected to a backup power supply. If a backup power supply is provided, the node bypass function of the SYSMAC LINK Units will operate whenever a node or node power supply fails. The failing node will be bypassed in the network and the overall network will continue operating, preventing total network shutdown.

In this example, if the Unit assigned node address 3 has an error, the node bypass function will eliminate this node from the network and the remainder of the network will continue functioning.

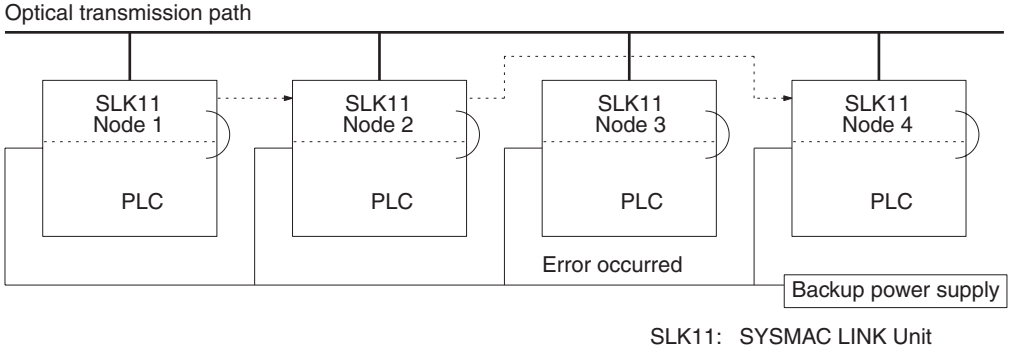

Note (1) With systems using optical transmission paths with a backup power supply, the backup power supply is given priority. Turn ON the backup power supply first, then turn ON the PLC power supply, or turn ON both the backup power supply and the PLC power supply at the same time. Communications data will be corrupted is the backup power supply is turned ON and OFF.

(2) A 24-VDC backup power supply is supplied directly to CS-series SYSMAC LINK Units. With non-CS-series optical fiber SYSMAC LINK Units, a 100-VAC or 200-VAC backup power supply is supplied using an Auxiliary Power Supply Unit mounted on the same Rack.

SECTION 9
Unit Replacement

The SYSMAC LINK Unit is a network device. If the Unit is damaged, it will affect the entire Network, so always ensure repairs are undertaken immediately. We recommend that you have a spare SYSMAC LINK Unit on hand so that repairs may be conducted quickly.

This section describes the replacement procedure and provides cautions for Unit replacement.

9-1 Replacing the Unit 146
9-1-1 Settings after Replacement 146
9-1-2 Resetting Network Parameters 146
9-2 Replacement Procedure. 147
9-3 Using the C200H-SLK21 or C1000H-SLK21 148

9-1 Replacing the Unit

Observe the following precautions when replacing the Unit.

- Always turn OFF the power before replacing the Unit.
- Check that the new Unit is not faulty.
- If you suspect that a poor connection is the cause of a malfunction, clean the connectors using a clean, soft cloth and industrial-grade alcohol. Remove any lint or threads left from the cloth, and remount the Unit.
- When returning a faulty Unit for repairs, always attach a detailed fault report to the Unit and return to you nearest OMRON outlet as listed at the back of this manual.

Note

(1) To prevent faulty operation be sure to turn OFF the power to all nodes before replacing the Unit.

(2) When replacing the Unit, do not reconnect that node to the Network before carrying out the procedures listed below. In particular, a node with a small address will become the polling node and communicate the initial network parameter status to other nodes, so there is the chance that network parameters in the entire Network will be damaged.

9-1-1 Settings after Replacement

After replacing a SYSMAC LINK Unit, reset the hardware switches, software switches, and data link tables, and wire it in the same manner as the previous Unit. This section describes settings that require particular care. Refer to the Unit replacement methods later in this section for details on replacing the Unit.

Note

(1) After replacing the CPU Unit, transfer important data, such as DM and Holding Area contents, to the new CPU Unit before restarting operation. Depending on the program, accidents can occur as a result of incorrect DM or Holding Area contents.

(2) CS-series SYSMAC LINK Units store data such as data link tables, network parameters, and routing tables in the CPU Unit. When replacing the CPU Unit, reset these settings using the CX-Net in CX-Programmer.

9-1-2 Resetting Network Parameters

When a CPU Unit has been replaced in a CS-series SYSMAC LINK Unit, it is necessary to reset the network parameters, data link tables, and routing tables. This section describes the resetting procedure for the network parameters. For details on data link table resetting procedures, refer to *4-5 Creating Data Links* and for routing table resetting procedures, refer to *5-2 Routing Tables*.

1,2,3...

1. Network parameters are read from the polling node when the Network is activated and this information is distributed to all nodes in the Network. For this reason, set the polled/polling node setting in the DM parameter area for the node replaced to a polled node before reconnecting the Unit to the SYSMAC LINK Network.

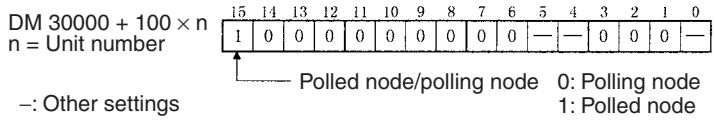

2. Turn the power OFF once, connect the SYSMAC LINK Network and turn the power ON again. Check that the Unit is participating in the Network.

If the INS indicator is lit and the ERC and ERH indicators are OFF, then the Unit is in the Network.

3. Return the Polled node/polling node setting of the node in which the Unit was replaced to “polling node.”

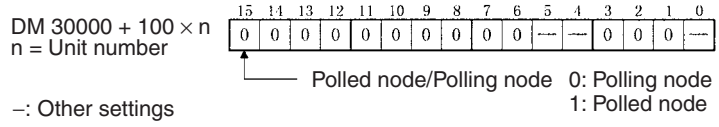

4. Restart the SYSMAC LINK Unit or turn ON the power again. Check that the Unit is participating in the Network.

   If the INS indicator is lit and the ERC and ERH indicators are not lit, then the Unit is in the Network.

Note

(1) Stop the data links before restarting the SYSMAC LINK Unit. Check again that the network parameters for the node that has been replaced are the same as for the other nodes.

(2) When replacing the Unit, do not reconnect that node to the Network before carrying out the procedures listed below. In particular, a node with a small address will become the polling node and communicate the initial network parameter status to other nodes, so there is the chance that network parameters in the entire Network will be damaged.

9-2 Replacement Procedure

Note In CS-series SYSMAC LINK Units, data is stored in the battery-powered backup SRAM in the CPU Unit. Consequently, a SYSMAC LINK Unit will function as before simply by making the appropriate hardware settings, even if it is replaced. The data link tables and routing tables must be reset, however, if the CPU Unit is replaced.

1,2,3...

1. Turn OFF all the nodes in the SYSMAC LINK Network.
2. Disconnect the communications cable from the SYSMAC LINK Unit you wish to replace, and remove the Unit.
3. Mount the new SYSMAC LINK Unit on the CPU Unit, and connect the communications cable (refer to *SECTION 2 Unit Components and Switch Settings*).
4. Set the unit number, node address, and terminating resistance in the new SYSMAC LINK Unit to the same as the previous one (Refer to *SECTION 2 Unit Components and Switch Settings*).
5. Turn ON the power to all nodes in the SYSMAC LINK Network, except to the CPU Unit for the SYSMAC LINK Unit that has been replaced.
6. Check that all other nodes are operating normally.
7. Read the network parameters using CX-Net in CX-Programmer, and check that the network settings are correct.
8. Start the data links from the data link startup node if the data links do not start automatically.
9. Check that the data links are operating normally using the data link status monitor in CX-Net in CX-Programmer.

9-3 Using the C200H-SLK21 or C1000H-SLK21

The CX-Programmer and CX-Net in CX-Programmer cannot perform remote monitoring/programming or create data link tables for the C200H-SLK21 or C1000H-SLK21. Replace the C200H-SLK21 or C1000H-SLK21 with the most recent SYSMAC LINK Unit, as shown in the following table.

Model not compatible with CX-Programmer or CX-Net	Corresponding model compatible with CX-Programmer or CX-Net	Notes
C200H-SLK21	C200H-SLK21-V1	Production stopped in 1992.
	C200HS-SLK22	Production stopped in 1996.
	C200HW-SLK23/24 (See note.)	Currently on sale.
C1000H-SLK21	C1000H-SLK21-V1	Currently on sale.

Note The C200HW-SLK23/24 can be used for C200H and C200HS PLCs.

SECTION 10
Inspection and Maintenance

This section contains information describing peri odic inspections required by the System.

10-1 Periodic Inspections 150
10-2 Handling Precautions 150
10-3 Tools and Equipment Needed for Inspection 150

10-1 Periodic Inspections

SYSMAC LINK Units must be inspected on a regular basis to ensure correct operation. SYSMAC LINK Units are built primarily of solid-state components and contain almost no parts subject to wear. Nevertheless, the life span of some solid-state components can be shortened as a result of adverse environmental conditions.

We recommend that the following points be checked at least once every 6 to 12 months as part of a standard inspection program. Ambient conditions should be checked more frequently. If any of these items deviate from the prescribed standards, take appropriate action to correct the condition.

Inspection item	Inspection contents	Standard operation	Inspection method
Environmental conditions	Check the ambient temperature and the temperature inside the unit.	0 to 55°C	Thermometer
	Check the ambient humidity and the humidity inside the unit.	10 to 90% (Check there is no condensation.)	Hygrometer
	Check there is no dust.	Clean away any dust.	Eyesight
Mounting conditions	Check the SYSMAC LINK Unit is firmly fixed.	Tighten any loose Units.	Eyesight
	Check the cable connectors have been fully inserted.	Tighten any loose cables.	Eyesight
	Check that external wiring screws are not loose.	Tighten any loose screws.	Phillips screwdriver
	Check that external wiring cables are not frayed.	Inspect the wiring externally for any abnormalities.	Eyesight

We recommend that users have backup Units available to make repairs and minimize down-time if a problem occurs in a SYSMAC LINK Unit.

10-2 Handling Precautions

Please observe the following precautions in the event of a problem:

- Always turn OFF the power when replacing a SYSMAC LINK Unit.
- If a SYSMAC LINK Unit fails, replace it with a new one and immediately verify that the new Unit is working properly.
- When returning a malfunctioning SYSMAC LINK Unit for repair, please attach a detailed description of the problem to the Unit and return it to the sales office nearest you (see listing at the end of this manual).
- If you suspect that a poor connection is the cause of a malfunction, clean the connectors using a clean, soft cloth and industrial-grade alcohol. Remove any lint or threads left from the cloth, and re-mount the SYSMAC LINK Unit.

10-3 Tools and Equipment Needed for Inspection

The following tools and equipment will be needed to perform inspection and adjustments.

- Assorted flat-blade and Phillips screwdrivers
- Circuit tester or digital voltmeter
- Industrial-grade alcohol and clean cotton cloth
- Synchroscope
- Pen-chart recording oscilloscope
- Thermometer, hygrometer

Appendix A
Standard Models

SYSMAC LINK Units

Name	Specification	Model	Applicable PLCs
SYSMAC LINK Unit	Optical fiber cable	CS1W-SLK11	CS1H-CPU67H CS1H-CPU66H CS1H-CPU65H CS1H-CPU64H CS1H-CPU63H CS1G-CPU45H CS1G-CPU44H CS1G-CPU43H CS1G-CPU42H CS1H-CPU67(-V1) CS1H-CPU66(-V1) CS1H-CPU65(-V1) CS1H-CPU64(-V1) CS1H-CPU63(-V1) CS1G-CPU45(-V1) CS1G-CPU44(-V1) CS1G-CPU43(-V1) CS1G-CPU42(-V1)
	Coaxial cable	CS1W-SLK21	

Cables

Optical Fiber Cable (for CS1W-SLK11)

Optical fiber cables with connectors. Use the following H-PCF cables:

Name	Specification		Model
H-PCF Cable (2-core optical fiber cable)	Black	10 m	S3200-HCCB101
		50 m	S3200-HCCB501
		100 m	S3200-HCCB102
		500 m	S3200-HCCB502
		1,000 m	S3200-HCCB103
	Orange	10 m	S3200-HCCO101
		50 m	S3200-HCCO501
		100 m	S3200-HCCO102
		500 m	S3200-HCCO502
		1,000 m	S3200-HCCO103
Optical connector	Use when connecting nodes to cables.		S3200-COCF2071 (See note.)
In-line adapter	Use in cable relays.		S3200-COIAT2000

Note Production of the S3200-COCF2011 Connector has been stopped. Use the S3200-COCF2071 as a replacement.

When ordering, specify the optical fiber cable type by adding codes to the model number as shown below.

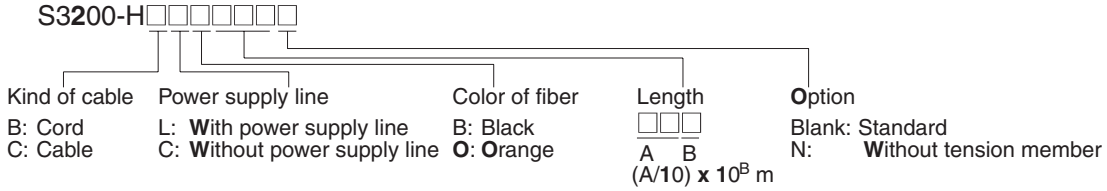

Tools

The following tools are required when preparing the cables yourself.

Name	Model	Model
Optical Fiber Assembly Kit	---	CAK-0057 (See note.)
Optical Power Tester	Tester set	S3200-CAT2700
	Head unit	S3200-CAT2702
Master Fiber	---	S3200-CAT2001H

Note Use the CAK-0057 (made by Sumitomo Electric Industries, Ltd.) to assemble the S3200-COCF2071 Connector. (Production of the S3200-CAK1062 Assembly Tool has been stopped.) The S3200-COCF2071 Connector can be assembled using the S3200-CAK1062 by adding the JRFK-57PLUS (made by Sumitomo Electric Industries, Ltd.).

Coaxial Cable (for CS1W-SLK21)

The following coaxial cables are recommended:

Name	Model	Maker
Coaxial cable	5C-2V	Fujikura Densen
	ECXF5C-2V	Hitachi Densen
F-Adapter	C1000H-CE001	OMRON
Terminal Resistor	C1000H-TER01	

Appendix B
Dimensions

CS1W-SLK11 Optical SYSMAC LINK Unit

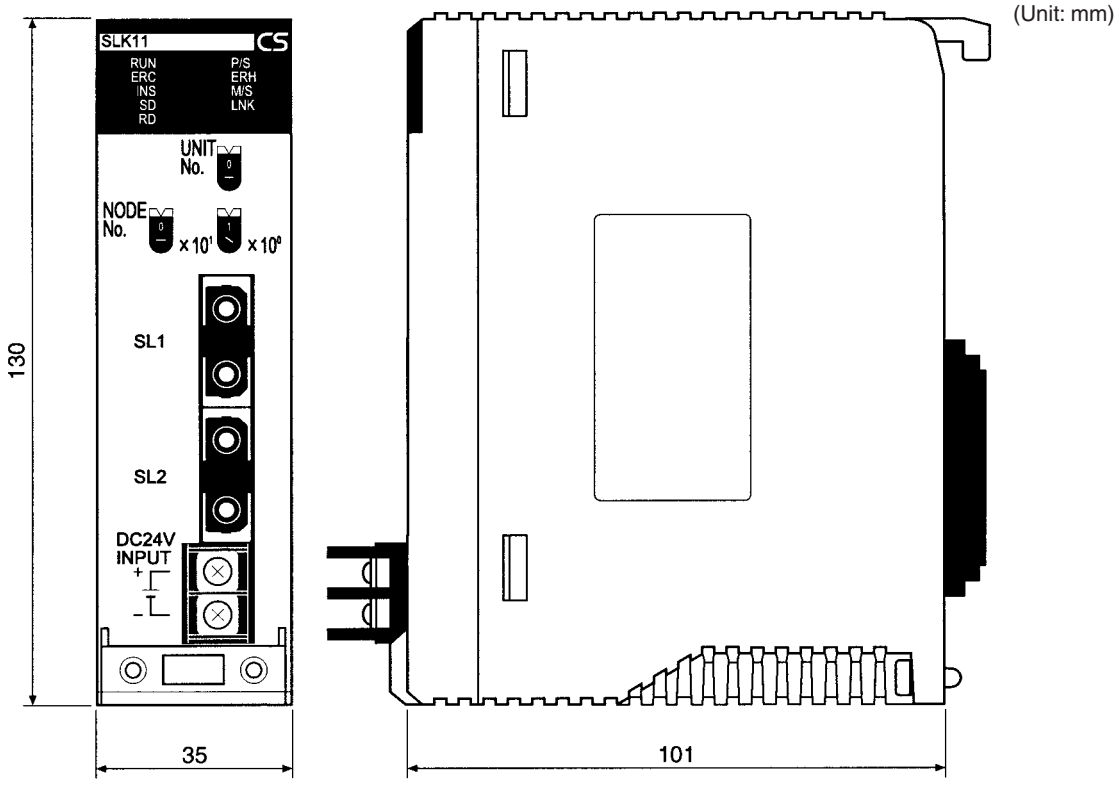

CS1W-SLK21 Coaxial SYSMAC LINK Unit

(Unit: mm)

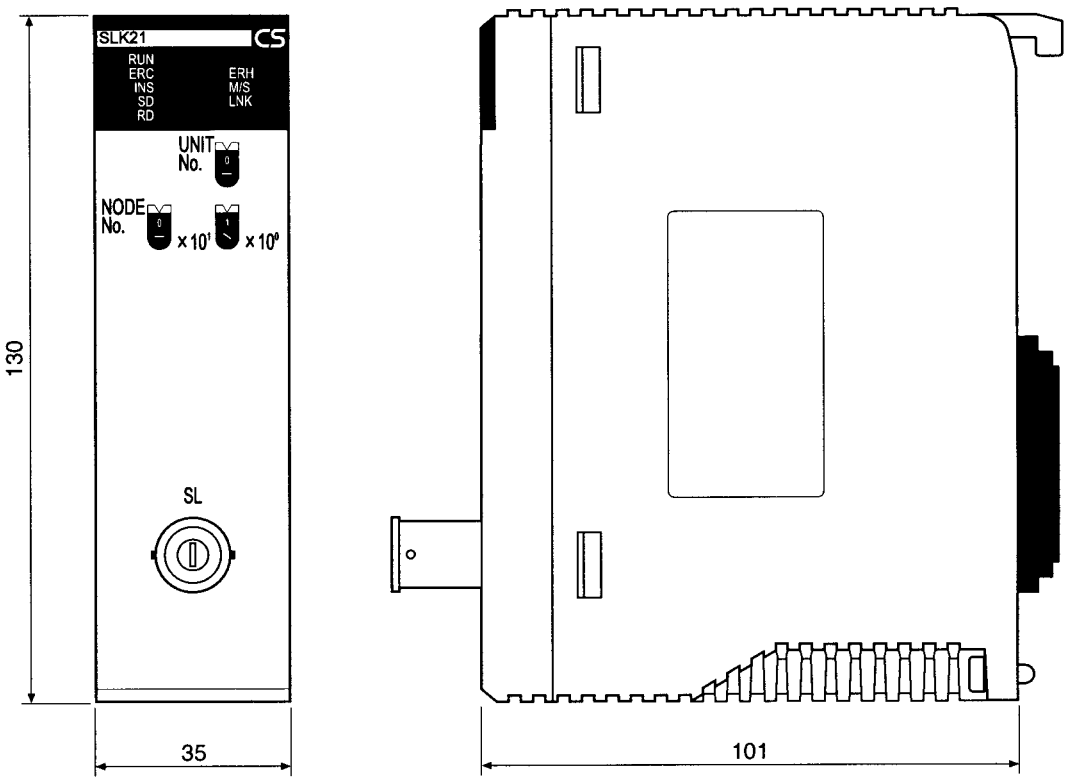

Appendix C
Related Auxiliary Area Information

This appendix lists the functions for the SYSMAC LINK Unit in the Auxiliary Area of the CS-series CPU Units.

Word(s)	Bit(s)	Function
A202	00 to 07	Communications Port Enabled (Network Communications Enabled) Flags
A203 to A210	00 to 15	Port 0 to 7 Completion Codes
A219	00 to 07	Port 0 to 7 Execute Error (Network Communications Execute Error) Flags
A302	00 to 15	CS-series CPU Bus Unit Initializing Flags
A401	13	Duplicate Number Error Flag (fatal error)
A402	03	CS-series CPU Bus Unit Setting Error Flag
	07	CS-series CPU Bus Unit Error Flag
A410	00 to 15	CPU Bus Unit Duplicate Number
A417	00 to 15	CS-series CPU Bus Unit Error, Unit Number Flags
A427	00 to 15	CS-series CPU Bus Unit Setting Error Unit Number
A501	00 to 15	CS-series CPU Bus Unit Restart Bits

Network Status Flags

Bits A20200 through A20207 are turned ON to indicate that the SEND(90), RECV(98), CMND(490) and PMCR(260) instructions and background execution (CS1-H CPU Units only) can be executed for the corresponding port, 0 through 7. Bits A219200 through A219207 are turned ON to indicate that an error has occurred in ports 0 through 7, respectively, during data communications using SEND(90), RECV(98), CMND(490), or PMCR(260).

Port 0 to 7 Response Codes

A203 through A210 contain the response codes for ports 0 through 7, respectively, following data communications using SEND(90), RECV(98), CMND(490), or PMCR.

CS-series CPU Bus Unit Initializing Flags

Bits A30200 through A30215 turn ON while the corresponding CS-series CPU Bus Units (Units #0 through #15, respectively) are initializing.

CS-series CPU Bus Unit Setting Error Flag and Unit Number

Bit A40203 is turned ON when the CS-series CPU Bus Units actually installed differ from the Units registered in the I/O table. The unit number of the CS-series CPU Bus Unit involved is written to word A427.

Bits A42700 through A42715 correspond to CS-series CPU Bus Units 0 through 15, respectively. When an error occurs, the bit corresponding to the unit number of the CS-series CPU Bus Unit involved is turned ON.

CS-series CPU Bus Unit Error Flag

Bit A40207 is turned ON when a parity error occurs during the transmission of data between the CPU Unit and CS-series CPU Bus Units. The unit number of the CS-series CPU Bus Unit involved is written to word A417.

CS-series CPU Bus Unit Numbers

Bits A41000 through A41015 correspond to CS-series CPU Bus Units 0 through 15, respectively. When two CPU Bus Units have the same unit number, the bits corresponding to the unit numbers of the CS-series CPU Bus Units involved are turned ON.

CS-series CPU Bus Unit Duplication Error Flag

Bit A40113 is turned ON when two CS-series CPU Bus Units have been assigned the same unit number. The duplicated unit number is indicated in A410.

CS-series CPU Bus Unit Error, Unit Number Flags

When an error occurs in a data exchange between the CPU Unit and a CS-series CPU Bus Unit, the CS-series CPU Bus Unit Error Flag (A40207) is turned ON and the bit in A417 corresponding to the unit number of the Unit where the error occurred is turned ON.

Bits A42200 through A42215 correspond to CPU Bus Units 0 through 15, respectively. When a CPU Bus Unit Error occurs, the bit corresponding to the unit number of the CPU Bus Unit involved is turned ON.

CS-series CPU Bus Unit Restart Bits

Bits A50100 through A50115 can be turned ON to reset CS-series CPU Bus Units numbers 0 through 15, respectively. The Restart Bits are turned OFF automatically when restarting is completed.

Appendix D
CPU Bus Unit Area Allocations

The CPU Bus Unit Area of the SYSMAC LINK Unit is allocated in the PLC's memory (bit area) according to the unit number as follows (25 words are allocated per Unit):

Unit No.	Words	Unit No.	Words
0	CIO 1500 to CIO 1524	8	CIO 1700 to CIO 1724
1	CIO 1525 to CIO 1549	9	CIO 1725 to CIO 1749
2	CIO 1550 to CIO 1574	10	CIO 1750 to CIO 1774
3	CIO 1575 to CIO 1599	11	CIO 1775 to CIO 1799
4	CIO 1600 to CIO 1624	12	CIO 1800 to CIO 1824
5	CIO 1625 to CIO 1649	13	CIO 1825 to CIO 1849
6	CIO 1650 to CIO 1674	14	CIO 1850 to CIO 1874
7	CIO 1675 to CIO 1699	15	CIO 1875 to CIO 1899

Configuration of CPU Bus Unit Area

The configuration of the CPU Bus Unit Area of the SYSMAC LINK Unit is as follows:

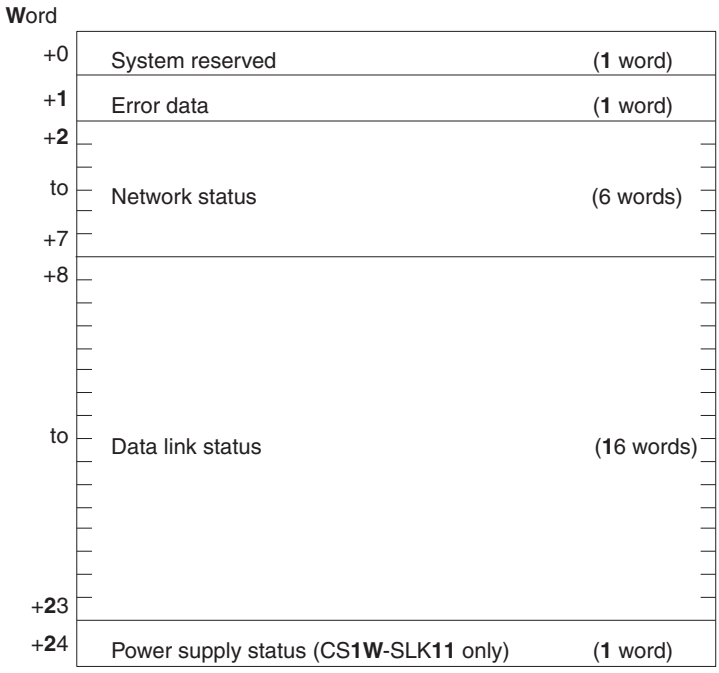

Error Data

Word: CIO 1500 + (25 x unit number) + 1

	15	14	13	12	11	10	9	8	7	6	5	4	3	2	1	0	Bit
+1		0	0	0						0	0	0					

- **1**: Network parameter error
- **1**: Data link table error
- **1**: Routing table error
- **1**: Communications unit setting error
- **1**: EEPROM error
- **1**: Node address setting error
- **1**: Node address duplication error
- **1**: Network parameter disagreement error
- **1**: Communications controller error
  Error log data 0: yes/**1**: no

Network Status (Refer to Section 3)

Words: CIO 1500 + (25 x unit number) + 2 to +7

Word	15	14	13	12	11	10	9	8	7	6	5	4	3	2	1	0	Bit
+2	16	15	14	13	12	11	10	9	8	7	6	5	4	3	2	1	
+3	32	31	30	29	28	27	26	25	24	23	22	21	20	19	18	17	
+4	48	47	46	45	44	43	42	41	40	39	38	37	36	35	34	33	
+5	–	–	62	61	60	59	58	57	56	55	54	53	52	51	50	49	
+6	Local network address								Local node address								
+7	Local unit address								Polling node address								

Each of these numbers stands for the node address corresponding to the bit. When the node belongs to the network, the corresponding bit will be ON. Bits 14 and 15 of word +5 are always OFF.

Note If the local node is disconnected from the network, only the bit corresponding to the local node is turned OFF (i.e., the entire status area is not turned OFF). Also, while the local node is disconnected, the bits corresponding to the other nodes will not be refreshed, even if actual status changes.

Data Link Status

Words: CIO 1500 + (25 x unit number) + 8 to +23

Word	15	14	13	12	11	10	9	8	7	6	5	4	3	2	1	0
+8	4th				3rd				2nd				1st			
+9	8th				7th				6th				5th			
+10	12th				11th				10th				9th			
+11	16th				15th				14th				13th			
+12	20th				19th				18th				17th			
+13	24th				23rd				22nd				21st			
+14	28th				27th				26th				25th			
+15	32nd				31st				30th				29th			
+16	36th				35th				34th				33rd			
+17	40th				39th				38th				37th			
+18	44th				43rd				42nd				41st			
+19	48th				47th				46th				45th			
+20	52nd				51st				50th				49th			
+21	56th				55th				54th				53rd			
+22	60th				59th				58th				57th			
+23		0	Start node address						62nd				61st			

Bit

The configuration of the four-bit data, registered on the data link table (refresh parameters) in order, expresses the status of each node as follows:
Status of each node

CPU Unit running
CPU Unit error
Communications error
Data link active

Local Node Data Link Active Flag
0: Stopped
1: Active

Note If the Local Node Data Link Active Flag (bit 15 of first word +23) is OFF, the data link status will be maintained as it was immediately before operation stopped. This may not be the same as the actual current status. When using the data link status, first check that the Local Node Data Link Active Flag is ON.

Power Supply

Word: CIO 1500 + (25 x unit number) + 24

Word	15	14	13	12	11	10	9	8	7	6	5	4	3	2	1	0
+24	0	0	0	0		0	0	0	0	0	0	0	0	0	0	0

Bit

0: No power supplied
1: Power supplied (CS1W-SLK11 only)

Appendix E
DM Area Allocations

Words in the DM Area are allocated to CS-series CPU Bus Units according to the unit numbers assigned to them, as shown below. Each Unit is allocated 100 words, of which 1 word is used.

Unit No.	Words	Unit No.	Words
0	D30000	8	D30800
1	D30100	9	D30900
2	D30200	10	D31000
3	D30300	11	D31100
4	D30400	12	D31200
5	D30500	13	D31300
6	D30600	14	D31400
7	D30700	15	D31500

Software Switches (D30000 + 100 × Unit Number)

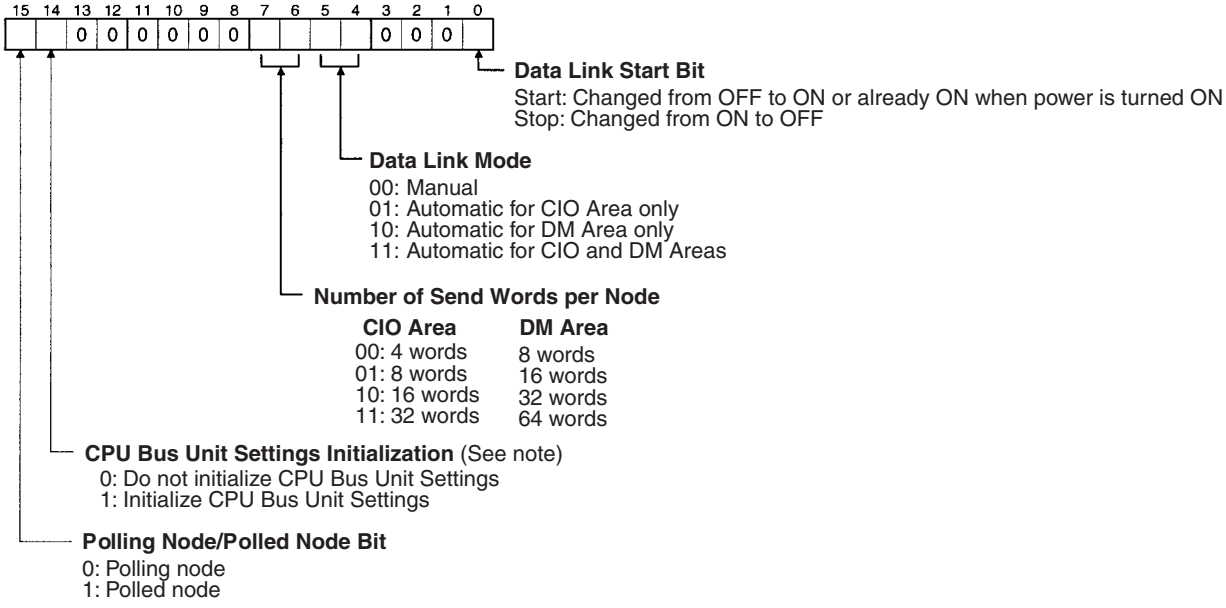

Note Initializes the network parameters registered in the CPU Bus Unit Setting Area in the CPU Unit and clears the data link tables.

Glossary

address A number used to identify the location of data or programming instructions in memory or to identify the location of a network or a unit in a network.

advanced instruction An instruction input with a function code that handles data processing operations within ladder diagrams, as opposed to a basic instruction, which makes up the fundamental portion of a ladder diagram.

allocation The process by which the PLC assigns certain bits or words in memory for various functions. This includes pairing I/O bits to I/O points on Units.

analog Something that represents or can process a continuous range of values as opposed to values that can be represented in distinct increments. Something that represents or can process values represented in distinct increments is called digital.

Analog I/O Unit I/O Units that convert I/O between analog and digital values. An Analog Input Unit converts an analog input to a digital value for processing by the PLC. An Analog Output Unit converts a digital value to an analog output.

AND A logic operation whereby the result is true if and only if both premises are true. In ladder-diagram programming the premises are usually ON/OFF states of bits or the logical combination of such states called execution conditions.

area See *data area* and *memory area*.

area prefix A one or two letter prefix used to identify a memory area in the PLC. All memory areas except the CIO Area require prefixes to identify addresses in them.

ASCII Short for American Standard Code for Information Interchange. ASCII is used to code characters for output to printers and other external devices.

asynchronous execution Execution of programs and servicing operations in which program execution and servicing are not synchronized with each other.

Auxiliary Area A PLC data area allocated to flags and control bits.

auxiliary bit A bit in the Auxiliary Area.

backup A copy made of existing data to ensure that the data will not be lost even if the original data is corrupted or erased.

BASIC A common programming language. BASIC Units are programmed in BASIC.

basic instruction A fundamental instruction used in a ladder diagram. See *advanced instruction*.

BASIC Unit A CPU Bus Unit used to run programs in BASIC.

baud rate The data transmission speed between two devices in a system measured in bits per second.

BCD Short for binary-coded decimal.

binary A number system where all numbers are expressed in base 2, i.e., numbers are written using only 0's and 1's. Each group of four binary bits is equivalent to one hexadecimal digit. Binary data in memory is thus often expressed in hexadecimal for convenience.

binary-coded decimal A system used to represent numbers so that every four binary bits is numerically equivalent to one decimal digit.

bit The smallest piece of information that can be represented on a computer. A bit has the value of either zero or one, corresponding to the electrical signals ON and OFF. A bit represents one binary digit. Some bits at particular addresses are allocated to special purposes, such as holding the status of input from external devices, while other bits are available for general use in programming.

bit address The location in memory where a bit of data is stored. A bit address specifies the data area and word that is being addressed as well as the number of the bit within the word.

Branching Link Adapter A Link Adapter used to branch connections to Units in a Link System used either to prevent the entire System from shutting down for an interruption at only one point in the System, or to enable connecting more than two Units in one System when each Unit provides only one connector.

buffer A temporary storage space for data in a computerized device.

building-block PLC A PLC that is constructed from individual components, or “building blocks.” With building-block PLCs, there is no one Unit that is independently identifiable as a PLC. The PLC is rather a functional assembly of Units.

bus A communications path used to pass data between any of the Units connected to it.

bus link A data link that passed data between two Units across a bus.

byte A unit of data equivalent to 8 bits, i.e., half a word.

central processing unit A device that is capable of storing programs and data, and executing the instructions contained in the programs. In a PLC System, the central processing unit executes the program, processes I/O signals, communicates with external devices, etc.

channel See *word*.

character code A numeric (usually binary) code used to represent an alphanumeric character.

checksum A sum transmitted with a data pack in communications. The checksum can be recalculated from the received data to confirm that the data in the transmission has not been corrupted.

CIM Computer integrated manufacturing; a process where one or more computers are used to control and integrate manufacturing processes.

CIO Area A memory area used to control I/O and to store and manipulate data. CIO Area addresses do not require prefixes.

combined Link System A control system that includes more than one of the following systems: Remote I/O System, SYSMAC Link System, Host Link System, or SYSMAC NET Link System.

common (link) parameter table A table of settings in a SYSMAC LINK System that specifies what words are to be used in the data links for all PLCs in the SYSMAC LINK System. See *refresh parameter table*.

common data Data that is stored in a memory of a PLC and which is shared by other PLCs in the same system. Each PLC has specified section(s) of the area allocated to it. Each PLC writes to the section(s) allocated to it and reads the sections allocated to the other PLCs with which it shares the common data.

constant An input for an operand in which the actual numeric value is specified. Constants can be input for certain operands in place of memory area addresses. Some operands must be input as constants.

control bit A bit in a memory area that is set either through the program or via a Programming Device to achieve a specific purpose, e.g., a Restart Bit is turned ON and OFF to restart a Unit.

control signal A signal sent from the PLC to affect the operation of the controlled system.

Control System All of the hardware and software components used to control other devices. A Control System includes the PLC System, the PLC programs, and all I/O devices that are used to control or obtain feedback from the controlled system.

controlled system The devices that are being controlled by a PLC System.

CPU See *central processing unit*.

CPU Bus Unit A special Unit used with CS-series PLCs that mounts to the CPU bus. This connection to the CPU bus enables special data links, data transfers, and processing.

CPU Rack The main Rack in a building-block PLC, the CPU Rack contains the CPU, a Power Supply, and other Units. The CPU Rack, along with the Expansion CPU Rack, provides both an I/O bus and a CPU bus.

C-series PLC Any of the following PLCs: C2000H, C1000H, C500, C200H, C40H, C28H, C20H, C60K, C60P, C40K, C40P, C28K, C28P, C20K, C20P, C120, or C20.

CTS An acronym for clear-to-send, a signal used in communications between electronic devices to indicate that the receiver is ready to accept incoming data.

CV Support Software A programming package run on an IBM PC/AT or compatible to serve as a Programming Device for CV-series PLCs.

CV-mode A form of communications usable only with CV-series PLCs. See *C-mode*.

CV-series PLC Any of the following PLCs: CV500, CV1000, CV2000, or CVM1

CVSS See *CV Support Software*.

cycle One unit of processing performed by the CPU, including SFC/ladder program execution, peripheral servicing, I/O refreshing, etc. The cycle is called the scan with C-series PLCs.

cycle time The time required to complete one cycle of CPU processing.

data area An area in the PLC's memory that is designed to hold a specific type of data.

data length In communications, the number of bits that is to be treated as one unit in data transmissions.

data link An automatic data transmission operation that allows PLCs or Units within PLCs to pass data back and forth via common data areas.

data link area A common data area established through a data link.

data link table A table of settings kept in memory that specifies what words are to be part of a data link for all PLCs involved in the link.

data register A storage location in memory used to hold data. In CV-series PLCs, data registers are used with or without index registers to hold data used in indirect addressing.

data sharing An aspect of SYSMAC Link Systems and SYSMAC NET Link Systems in which common data areas or common data words are created between two or more PLCs.

data transfer Moving data from one memory location to another, either within the same device or between different devices connected via a communications line or network.

debug A process by which a draft program is corrected until it operates as intended. Debugging includes both the removal of syntax errors, as well as the fine-tuning of timing and coordination of control operations.

decimal A number system where numbers are expressed to the base 10. In a PLC all data is ultimately stored in binary form, four binary bits are often used to represent one decimal digit, via a system called binary-coded decimal.

decrement Decreasing a numeric value, usually by 1.

default A value automatically set by the PLC when the user does not specifically set another value. Many devices will assume such default conditions upon the application of power.

delimiter A code sent during communications between devices to indicate the end of the current transmission, but not the end of the entire transmission. See *terminator*.

destination The location where an instruction places the data on which it is operating, as opposed to the location from which data is taken for use in the instruction. The location from which data is taken is called the source.

digit A unit of storage in memory that consists of four bits.

DIP switch Dual in-line package switch, an array of pins in a signal package that is mounted to a circuit board and is used to set operating parameters.

distributed control A automation concept in which control of each portion of an automated system is located near the devices actually being controlled, i.e., control is decentralized and ‘distributed’ over the system. Distributed control is a concept basic to PLC Systems.

DM Area A data area used to hold only word data. Words in the DM area cannot be accessed bit by bit.

DM word A word in the DM Area.

downloading The process of transferring a program or data from a higher-level or host computer to a lower-level or slave computer. If a Programming Device is involved, the Programming Device is considered the host computer.

EEPROM Electrically erasable programmable read-only memory; a type of ROM in which stored data can be erased and reprogrammed. This is accomplished using a special control lead connected to the EEPROM chip and can be done without having to remove the EEPROM chip from the device in which it is mounted.

electrical noise Random variations of one or more electrical characteristics such as voltage, current, and data, which might interfere with the normal operation of a device.

EM Area Extended Data Memory Area; an area that can be optionally added to certain PLCs to enable greater data storage. Functionally, the EM Area operates like the DM Area. Area addresses are prefixes with E and only words can be accessed. The EM Area is separated into multiple banks.

EPROM Erasable programmable read-only memory; a type of ROM in which stored data can be erased, by ultraviolet light or other means, and reprogrammed.

error code A numeric code generated to indicate that an error exists, and something about the nature of the error. Some error codes are generated by the system; others are defined in the program by the operator.

even parity A communication setting that adjusts the number of ON bits so that it is always even. See *parity*.

event processing Processing that is performed in response to an event, e.g., an interrupt signal.

Expansion CPU Rack A Rack connected to the CPU Rack to increase the virtual size of the CPU Rack. Units that may be mounted to the CPU Backplane may also be mounted to the Expansion CPU Backplane.

Expansion I/O Rack A Rack used to increase the I/O capacity of a PLC. In CV-Series PLCs, either one Expansion I/O Rack can be connected directly to the CPU or Expansion CPU Rack or multiple Expansion I/O Racks can be connected by using an I/O Control and I/O Interface Units.

FA Factory automation.

factory computer A general-purpose computer, usually quite similar to a business computer, that is used in automated factory control.

fatal error An error that stops PLC operation and requires correction before operation can continue.

FCS See *frame checksum*.

FINS See *CV-mode*.

flag A dedicated bit in memory that is set by the system to indicate some type of operating status. Some flags, such as the carry flag, can also be set by the operator or via the program.

force reset The process of forcibly turning OFF a bit via a programming device. Bits are usually turned OFF as a result of program execution.

force set The process of forcibly turning ON a bit via a programming device. Bits are usually turned ON as a result of program execution.

frame checksum The results of exclusive ORing all data within a specified calculation range. The frame checksum can be calculated on both the sending and receiving end of a data transfer to confirm that data was transmitted correctly.

GPC An acronym for Graphic Programming Console.

Graphic Programming Console A programming device with advanced programming and debugging capabilities to facilitate PLC operation. A Graphic Programming Console is provided with a large display onto which ladder-diagram programs can be written directly in ladder-diagram symbols for input into the PLC without conversion to mnemonic form.

handshaking The process whereby two devices exchange basic signals to coordinate communications between them.

header code A code in an instruction that specifies what the instruction is to do.

hexadecimal A number system where all numbers are expressed to the base 16. In a PLC all data is ultimately stored in binary form. Displays and inputs on Programming Devices, however, are often expressed in hexadecimal to simplify operation. Each group of four binary bits is numerically equivalent to one hexadecimal digit.

host interface An interface that allows communications with a host computer.

Host Link System A system with one or more host computers connected to one or more PLCs via Host Link Units or host interfaces so that the host computer can be used to transfer data to and from the PLC(s). Host Link Systems enable centralized management and control of PLC Systems.

Host Link Unit An interface used to connect a C-series PLC to a host computer in a Host Link System.

I/O allocation The process by which the PLC assigns certain bits in memory for various functions. This includes pairing I/O bits to I/O points on Units.

I/O Block Either an Input Block or an Output Block. I/O Blocks provide mounting positions for replaceable relays.

I/O Control Unit A Unit mounted to the CPU Rack to monitor and control I/O points on Expansion CPU Racks or Expansion I/O Racks.

I/O delay The delay in time from when a signal is sent to an output to when the status of the output is actually in effect or the delay in time from when the status of an input changes until the signal indicating the change in the status is received.

I/O device A device connected to the I/O terminals on I/O Units, Special I/O Units, etc. I/O devices may be either part of the Control System, if they function to help control other devices, or they may be part of the controlled system.

I/O Interface Unit A Unit mounted to an Expansion CPU Rack or Expansion I/O Rack to interface the Rack to the CPU Rack.

I/O point The place at which an input signal enters the PLC System, or at which an output signal leaves the PLC System. In physical terms, I/O points correspond to terminals or connector pins on a Unit; in terms of programming, I/O points correspond to I/O bits in the IR area.

I/O refreshing The process of updating output status sent to external devices so that it agrees with the status of output bits held in memory and of updating input bits in memory so that they agree with the status of inputs from external devices.

I/O response time The time required for an output signal to be sent from the PLC in response to an input signal received from an external device.

I/O Terminal A Remote I/O Unit connected in a Wired Remote I/O System to provide a limited number of I/O points at one location. There are several types of I/O Terminals.

I/O Unit The most basic type of Unit mounted to a Backplane. I/O Units include Input Units and Output Units, each of which is available in a range of specifications. I/O Units do not include Special I/O Units, Link Units, etc.

I/O verification error An error generated by a disagreement between the Units registered in the I/O table and the Units actually mounted to the PLC.

I/O word A word in the CIO Area that is allocated to a Unit in the PLC System and is used to hold I/O status for that Unit.

IBM PC/AT or compatible A computer that has similar architecture to, that is logically compatible with, and that can run software designed for an IBM PC/AT computer.

initialize Part of the startup process whereby some memory areas are cleared, system setup is checked, and default values are set.

input The signal coming from an external device into the PLC. The term input is often used abstractly or collectively to refer to incoming signals.

input bit A bit in the CIO Area that is allocated to hold the status of an input.

Input Block A Unit used in combination with a Remote Interface to create an I/O Terminal. An Input Block provides mounting positions for replaceable relays. Each relay can be selected according to specific input requirements.

input device An external device that sends signals into the PLC System.

input point The point at which an input enters the PLC System. Input points correspond physically to terminals or connector pins.

input signal A change in the status of a connection entering the PLC. Generally an input signal is said to exist when, for example, a connection point goes from low to high voltage or from a nonconductive to a conductive state.

Input Terminal An I/O Terminal that provides input points.

instruction A direction given in the program that tells the PLC of the action to be carried out, and the data to be used in carrying out the action. Instructions can be used to simply turn a bit ON or OFF, or they can perform much more complex actions, such as converting and/or transferring large blocks of data.

interface An interface is the conceptual boundary between systems or devices and usually involves changes in the way the communicated data is represented. Interface devices such as NSBs perform operations like changing the coding, format, or speed of the data.

interrupt (signal) A signal that stops normal program execution and causes a subroutine to be run or other processing to take place.

Interrupt Input Unit A Rack-mounting Unit used to input external interrupts into a PLC System.

IOIF An acronym for I/O Interface Unit.

IOM (Area) A collective memory area containing all of the memory areas that can be accessed by bit, including timer and counter Completion Flags. The IOM Area includes all memory area memory addresses between 0000 and 0FFF.

JIS An acronym for Japanese Industrial Standards.

jump A type of programming where execution moves directly from one point in a program to another, without sequentially executing any instructions in between. Jumps in ladder diagrams are usually conditional on an execution condition; jumps in SFC programs are conditional on the step status and transition condition status before the jump.

LAN An acronym for local area network.

least-significant (bit/word) See *rightmost (bit/word)*.

LED Acronym for light-emitting diode; a device used as for indicators or displays.

leftmost (bit/word) The highest numbered bits of a group of bits, generally of an entire word, or the highest numbered words of a group of words. These bits/words are often called most-significant bits/words.

link A hardware or software connection formed between two Units. “Link” can refer either to a part of the physical connection between two Units or a software connection created to data existing at another location (i.e., data links).

link parameter table See *common link parameter table*.

Link System A system used to connect remote I/O or to connect multiple PLCs in a network. Link Systems include the following: SYSMAC BUS Remote I/O Systems, SYSMAC BUS/2 Remote I/O Systems, SYSMAC LINK Systems, Host Link Systems, and SYSMAC NET Link Systems.

Link Unit Any of the Units used to connect a PLC to a Link System. These include Remote I/O Units, SYSMAC LINK Units, and SYSMAC NET Link Units.

load The processes of copying data either from an external device or from a storage area to an active portion of the system such as a display buffer. Also, an output device connected to the PLC is called a load.

local area network A network consisting of nodes or positions in a loop arrangement. Each node can be any one of a number of devices. This kind of network usually operates over a small area such as a group of offices or a factory floor.

local network table A table that specifies all of the networks that a PLC belongs to and the unit numbers of the Units connecting the PLC to each of these networks.

master In a SYSMAC NET Link System, a Unit specified to manage network communications.

master number A number assigned to a master in a SYSMAC NET Link System. This number is different from the unit number.

MCR Unit Magnetic Card Reader Unit.

megabyte A unit of storage equal to one million bytes.

memory area Any of the areas in the PLC used to hold data or programs.

most-significant (bit/word) See *leftmost (bit/word).*

nesting Programming one loop within another loop, programming a call to a subroutine within another subroutine, or programming an IF–ELSE programming section within another IF–ELSE section.

Network Service Board A device with an interface to connect devices other than PLCs to a SYSMAC NET Link System.

Network Service Unit A Unit that provides two interfaces to connect peripheral devices to a SYSMAC NET Link System.

network support table Tables of settings used to establish operating parameters for SYSMAC LINK and SYSMAC NET Link Systems.

node One of the positions in a LAN. Each node incorporates a device that can communicate with the devices at all of the other nodes. The device at a node is identified by the node number.

node number A number used to identify a node on a network. The node number of a CV-series PLC is called the “unit number” in the PLC Setup.

noise interference Disturbances in signals caused by electrical noise.

nonfatal error A hardware or software error that produces a warning but does not stop the PLC from operating.

NOT A logic operation which inverts the status of the operand. For example, AND NOT indicates an AND operation with the opposite of the actual status of the operand bit.

NSB An acronym for Network Service Board.

NSU An acronym for Network Service Unit.

octal A number system where all numbers are expressed in base 8, i.e., numbers are written using only numerals 0 through 7.

odd parity A communications setting that adjusts the number of ON bits so that it is always odd. See *parity*.

OFF The status of an input or output when a signal is said not to be present. The OFF state is generally represented by a low voltage or by non-conductivity, but can be defined as the opposite of either.

OFF delay The delay between the time when a signal is switched OFF (e.g., by an input device or PLC) and the time when the signal reaches a state readable as an OFF signal (i.e., as no signal) by a receiving party (e.g., output device or PLC).

offset A positive or negative value added to a base value such as an address to specify a desired value.

ON The status of an input or output when a signal is said to be present. The ON state is generally represented by a high voltage or by conductivity, but can be defined as the opposite of either.

ON delay The delay between the time when an ON signal is initiated (e.g., by an input device or PLC) and the time when the signal reaches a state readable as an ON signal by a receiving party (e.g., output device or PLC).

operand The values designated as the data to be used for an instruction. An operand can be input as a constant expressing the actual numeric value to be used or as an address to express the location in memory of the data to be used.

operating error An error that occurs during actual PLC operation as opposed to an initialization error, which occurs before actual operations can begin.

optical communications A communications method in which signals are sent over optical fiber cable to prevent noise interference and increase transmission distance.

OR A logic operation whereby the result is true if either of two premises is true, or if both are true. In ladder-diagram programming the premises are usually ON/OFF states of bits or the logical combination of such states called execution conditions.

output The signal sent from the PLC to an external device. The term output is often used abstractly or collectively to refer to outgoing signals.

Output Block A Unit used in combination with a Remote Interface to create an I/O Terminal. An Output Block provides mounting positions for replaceable relays. Each relay can be selected according to specific output requirements.

output device An external device that receives signals from the PLC System.

output point The point at which an output leaves the PLC System. Output points correspond physically to terminals or connector pins.

output signal A signal being sent to an external device. Generally an output signal is said to exist when, for example, a connection point goes from low to high voltage or from a nonconductive to a conductive state.

Output Terminal An I/O Terminal that provides output points.

overflow The state where the capacity of a data storage location has been exceeded.

overwrite Changing the content of a memory location so that the previous content is lost.

parity Adjustment of the number of ON bits in a word or other unit of data so that the total is always an even number or always an odd number. Parity is generally used to check the accuracy of data after being transmitted by confirming that the number of ON bits is still even or still odd.

parity check Checking parity to ensure that transmitted data has not been corrupted.

PLC An acronym for Programmable Controller.

PLC configuration The arrangement and interconnections of the Units that are put together to form a functional PLC.

PLC System With building-block PLCs, all of the Racks and independent Units connected directly to them up to, but not including the I/O devices. The boundaries of a PLC System are the PLC and the program in its CPU at the upper end; and the I/O Units, Special I/O Units, Optical I/O Units, Remote Terminals, etc., at the lower end.

PCB An acronym for printed circuit board.

PLC Setup A group of operating parameters set in the PLC from a Programming Device to control PLC operation.

Peripheral Device Devices connected to a PLC System to aid in system operation. Peripheral devices include printers, programming devices, external storage media, etc.

peripheral servicing Processing signals to and from peripheral devices, including refreshing, communications processing, interrupts, etc.

PID Unit A Unit designed for PID control.

polling The process whereby a device consecutively sends signals to other devices in the same network to pass data back and forth, e.g., as in a data link.

present value The current value registered in a device at any instant during its operation. Present value is abbreviated as PV. The use of this term is generally restricted to timers and counters.

printed circuit board A board onto which electrical circuits are printed for mounting into a computer or electrical device.

Programmable Controller A computerized device that can accept inputs from external devices and generate outputs to external devices according to a program held in memory. Programmable Controllers are used to automate control of external devices. Although single-unit Programmable Controllers are available, building-block Programmable Controllers are constructed from separate components. Such Programmable Controllers are formed only when enough of these separate components are assembled to form a functional assembly, i.e., there is no one individual Unit called a PLC.

Programming Console The simplest form or programming device available for a PLC. Programming Consoles are available both as hand-held models and as CPU-mounting models.

Programming Device A Peripheral Device used to input a program into a PLC or to alter or monitor a program already held in the PLC. There are dedicated programming devices, such as Programming Consoles, and there are non-dedicated devices, such as a host computer.

PROM Programmable read-only memory; a type of ROM into which the program or data may be written after manufacture, by a customer, but which is fixed from that time on.

PROM Writer A peripheral device used to write programs and other data into a ROM for permanent storage and application.

prompt A message or symbol that appears on a display to request input from the operator.

protocol The parameters and procedures that are standardized to enable two devices to communicate or to enable a programmer or operator to communicate with a device.

PV See *present value*.

Rack An assembly that forms a functional unit in a Rack PLC System. A Rack consists of a Backplane and the Units mounted to it. These Units include the Power Supply, CPU, and I/O Units. Racks include CPU Racks, Expansion I/O Racks, and I/O Racks. The CPU Rack is the Rack with the CPU mounted to it. An Expansion I/O Rack is an additional Rack that holds extra I/O Units. An I/O Rack is used in the C2000H Duplex System, because there is no room for any I/O Units on the CPU Rack in this System.

rack number A number assigned to a Rack according to the order that it is connected to the CPU Rack, with the CPU Rack generally being rack number 0.

Rack PLC A PLC that is composed of Units mounted to one or more Racks. This configuration is the most flexible, and most large PLCs are Rack PLCs. A Rack PLC is the opposite of a Package-type PLC, which has all of the basic I/O, storage, and control functions built into a single package.

RAM Random access memory; a data storage media. RAM will not retain data when power is disconnected.

RAS An acronym for reliability, assurance, safety.

refresh The process of updating output status sent to external devices so that it agrees with the status of output bits held in memory and of updating input bits in memory so that they agree with the status of inputs from external devices.

refresh parameter (table) A table of settings that specifies which words in the data links for a System are to be refreshed for a particular PLC. See *common link parameter table*.

relay-based control The forerunner of PLCs. In relay-based control, groups of relays are interconnected to form control circuits. In a PLC, these are replaced by programmable circuits.

reserved bit A bit that is not available for user application.

reserved word A word in memory that is reserved for a special purpose and cannot be accessed by the user.

reset The process of turning a bit or signal OFF or of changing the present value of a timer or counter to its set value or to zero.

response code A code sent with the response to a data transmission that specifies how the transmitted data was processed.

response format A format specifying the data required in a response to a data transmission.

Restart Bit A bit used to restart a Unit mounted to a PLC.

restart continuation A process that allows memory and program execution status to be maintained so that PLC operation can be restarted from the state it was in when operation was stopped by a power interruption.

retrieve The processes of copying data either from an external device or from a storage area to an active portion of the system such as a display buffer. Also, an output device connected to the PLC is called a load.

retry The process whereby a device will re-transmit data which has resulted in an error message from the receiving device.

rightmost (bit/word) The lowest numbered bits of a group of bits, generally of an entire word, or the lowest numbered words of a group of words. These bits/words are often called least-significant bits/words.

rising edge The point where a signal actually changes from an OFF to an ON status.

ROM Read only memory; a type of digital storage that cannot be written to. A ROM chip is manufactured with its program or data already stored in it and can never

be changed. However, the program or data can be read as many times as desired.

routing table Tables of settings that specify what networks a device is a member of and what nodes must be passed through to reach other specific networks. See *local network table* and *relay network table*.

RS-232C interface An industry standard for serial communications.

RS-422 interface An industry standard for serial communications.

scan The process used to execute a ladder-diagram program. The program is examined sequentially from start to finish and each instruction is executed in turn based on execution conditions. The scan also includes peripheral processing, I/O refreshing, etc. The scan is called the cycle with CV-series PLCs.

scan time The time required for a single scan of a ladder-diagram program.

self diagnosis A process whereby the system checks its own operation and generates a warning or error if an abnormality is discovered.

series A wiring method in which Units are wired consecutively in a string. In Link Systems wired through Link Adapters, the Units are still functionally wired in series, even though Units are placed on branch lines.

servicing The process whereby the PLC provides data to or receives data from external devices or remote I/O Units, or otherwise handles data transactions for Link Systems.

set The process of turning a bit or signal ON.

set value The value from which a decrementing counter starts counting down or to which an incrementing counter counts up (i.e., the maximum count), or the time from which or for which a timer starts timing. Set value is abbreviated SV.

software error An error that originates in a software program.

software protect A means of protecting data from being changed that uses software as opposed to a physical switch or other hardware setting.

software switch See *memory switch*.

Special I/O Unit A Unit that is designed for a specific purpose. Special I/O Units include Position Control Units, High-speed Counter Units, Analog I/O Units, etc.

SRAM Static random access memory; a data storage media.

subroutine A group of instructions placed separate from the main program and executed only when called from the main program or activated by an interrupt.

SV Abbreviation for set value.

synchronous execution Execution of programs and servicing operations in which program execution and servicing are synchronized so that all servicing operations are executed each time the programs are executed.

syntax The form of a program statement (as opposed to its meaning). For example, the two statements, `LET A=B+B` and `LET A=B*2` use different syntaxes, but have the same meaning.

syntax error An error in the way in which a program is written. Syntax errors can include 'spelling' mistakes (i.e., a function code that does not exist), mistakes in specifying operands within acceptable parameters (e.g., specifying read-only bits as a destination), and mistakes in actual application of instructions (e.g., a call to a subroutine that does not exist).

SYSMAC LINK System A communications system used to create data links and enable network communications between PLCs.

SYSMAC NET Link System An optical LAN formed from PLCs connected through SYSMAC NET Link Units. A SYSMAC NET Link System also normally contains nodes interfacing computers and other peripheral devices. PLCs in the SYSMAC NET Link System can pass data back and forth, receive commands from any interfaced computer, and share any interfaced peripheral device.

SYSMAC NET Link Unit The Unit used to connect PLCs to a SYSMAC NET Link System.

system configuration The arrangement in which Units in a System are connected. This term refers to the conceptual arrangement and wiring together of all the devices needed to comprise the System. In OMRON terminology, system configuration is used to describe the arrangement and connection of the Units comprising a Control System that includes one or more PLCs.

system error An error generated by the system, as opposed to one resulting from execution of an instruction designed to generate an error.

system error message An error message generated by the system, as opposed to one resulting from execution of an instruction designed to generate a message.

terminator The code comprising an asterisk and a carriage return (* CR) which indicates the end of a block of data in communications between devices. Frames within a multi-frame block are separated by delimiters. Also a Unit in a Link System designated as the last Unit on the communications line.

timer A location in memory accessed through a TC bit and used to time down from the timer's set value. Timers are turned ON and reset according to their execution conditions.

TR Area A data area used to store execution conditions so that they can be reloaded later for use with other instructions.

TR bit A bit in the TR Area.

transfer The process of moving data from one location to another within the PLC, or between the PLC and external devices. When data is transferred, generally a copy of the data is sent to the destination, i.e., the content of the source of the transfer is not changed.

transmission distance The distance that a signal can be transmitted.

UM area The memory area used to hold the active program, i.e., the program that is being currently executed.

Unit In OMRON PLC terminology, the word Unit is capitalized to indicate any product sold for a PLC System. Though most of the names of these products end with the word Unit, not all do, e.g., a Remote Terminal is referred to in a collective sense as a Unit. Context generally makes any limitations of this word clear.

unit address A number used to control network communications. Unit addresses are computed for Units in various ways, e.g., 10 Hex is added to the unit number to determine the unit address for a CPU Bus Unit.

unit number A number assigned to some Link Units, Special I/O Units, and CPU Bus Units to facilitate identification when assigning words or other operating parameters.

uploading The process of transferring a program or data from a lower-level or slave computer to a higher-level or host computer. If a Programming Device is involved, the Programming Device is considered the host computer.

watchdog timer A timer within the system that ensures that the scan time stays within specified limits. When limits are reached, either warnings are given or PLC operation is stopped depending on the particular limit that is reached.

WDT See *watchdog timer*.

wire communications A communications method in which signals are sent over wire cable. Although noise resistance and transmission distance can sometimes be a problem with wire communications, they are still the cheapest and the most common, and perfectly adequate for many applications.

word A unit of data storage in memory that consists of 16 bits. All data areas consists of words. Some data areas can be accessed only by words; others, by either words or bits.

word address The location in memory where a word of data is stored. A word address must specify (sometimes by default) the data area and the number of the word that is being addressed.

word allocation The process of assigning I/O words and bits in memory to I/O Units and terminals in a PLC System to create an I/O Table.

work area A part of memory containing work words/bits.

work bit A bit in a work word.

work word A word that can be used for data calculation or other manipulation in programming, i.e., a ‘work space’ in memory. A large portion of the IR area is always reserved for work words. Parts of other areas not required for special purposes may also be used as work words.

write protect switch A switch used to write-protect the contents of a storage device, e.g., a floppy disk. If the hole on the upper left of a floppy disk is open, the information on this floppy disk cannot be altered.

write-protect A state in which the contents of a storage device can be read but cannot be altered.

Index

A–C

automatic generation of data link tables, 47
broadcast test, 119
cables
  connecting transmission cables, 19
  optical, 25
  Optical Fiber Cables, 27
characteristics
  data link, 62
coaxial cable
  See also cables
communications
  cables
    optical, 25
  data exchange timing, 64
  data processing time, 65
  preparations, 10
  testing
    broadcast test, 119
    internode echo test, 118
  token bus, 34
communications cycle, 34
communications cycle time, 37
  data link, 62
Connectors
  installation, 28
Controller Link
  network
    remote, 124
Controller Link Units
  CS-series PLCs, 16
CS-series PLCs
  installation, 18
CV-mode command set
  DATA LINK START, 112
  ERROR LOG CLEAR, 121
  ERROR LOG READ, 120
  HALT DATA LINK, 112
  RESET, 112
CV-mode commands
  command set
    BROADCAST TEST DATA SEND, 119
    BROADCAST TEST RESULTS READ, 119
    CONTROLLER DATA READ, 113
    CONTROLLER STATUS READ, 113
    DATA LINK STATUS READ, 117
    INTERNODE ECHO TEST, 118
    NETWORK STATUS READ, 115
  errors, 131
  for SYSMAC LINK Units, 112–121
  response codes
    errors, 131
CX-Net, 9
CX-Programmer, 9

D

data link, 42, 86
  characteristics, 62
  communications cycle time, 62
  controlling, 43
  creating, 46
  Data Link Status Flag, 56
  halting, 112
  precautions, 60
  reading data link status, 117
  refreshing, 51
  starting, 112
  status flags, 56
  table back-up, 48
  tables
    automatic generation, 47
    manual generation, 48
data links
  automatic setting, 12
  manual setting, 10
  procedures, 10
data read/write services, 92
delay times, 105
dimensions
  crimp terminals, 30
EC Directives, xvii

E–F

error codes, 138
error log, 137
  reading and clearing, 142
  table, 137
errors
  clearing
    CV-series PLCs
      error log, 121
  CV-mode commands, 131
  LED indications, 128
  reading
    CV-series PLCs
      error log, 120
flags
  Network Instruction Enabled Flag, 95
  Network Instruction Error Flag, 95

frames
maximum number, 37
handling precautions, 150

H–I

I/O tables, 11, 13
indicators
error indications, 128
inspection
tools and equipment needed, 150
installation, 10
communications cables, 27–28
connectors, 28
CS-series PLCs, 18
internode echo test, 118

M

manual generation of data link tables, 48
maximum node address, 37
maximum number of frames, 37
message service
procedure, 14
model numbers
reading PLC model number, 113

N

network
interconnecting Controller Link networks, 84
interconnecting other OMRON networks, 84
reading network status, 115
remote Controller Link networks, 124
network parameters, 35
setting, 36
number of polled units, 37

O

Optical Fiber Cables, 27
accessories, 27
optical fiber cables
See also cables
overview, 2

P

PLC
reading CV-series PLC status, 113
reading various CV-series PLC data, 113
polled units
number, 37
polling cycle
definition, 34
precautions
general, xiii
handling, 150
replacing the Unit, 146
programming
remote, 124

R

refresh of data link area, 51
resetting
SYSMAC LINK Unit, 112
response codes, 95
response times, 65

S

specifications, 4
backup power supply, 29
standard models, 151
status
data link, 56
switches
node address
setting, 35
SYSMAC LINK System
communications, 34
features, 3
SYSMAC LINK Unit
components
C1000H-SLK11/SLK21-V1, 16
replacing, 147

T

test
broadcast, 119
internode echo, 118
token bus communications
definition, 34
token cycle
definition, 34
transmission cycle time
changing, 63
definition, 35

Revision History

A manual revision code appears as a suffix to the catalog number on the front cover of the manual.

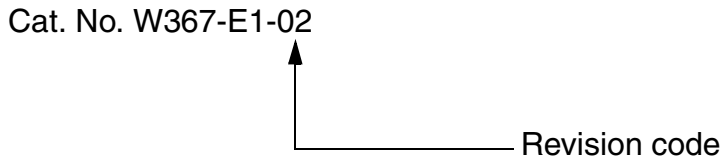

The following table outlines the changes made to the manual during each revision. Page numbers refer to the previous version.

Revision code	Date	Revised content
1	December 1999	Original production
02	June 2004	“CS1 (Series)” was changed to “CS (Series)” throughout the manual where appropriate. “User Manual” was corrected to “Operation Manual” throughout the manual where necessary. “PC” was changed to “PLC” throughout the manual in the sense of Programmable Controller. In addition, the following changes were made. **Page xiii:** EMI standard changed. **Page 5:** Parenthetic information added to first table. **Page 6:** “CS1-series CPU” changed to “SYSMAC LINK” in one place. **Page 7:** Note removed. **Page 11:** Changes made to notes in several places. **Page 12:** Text added to fourth table. **Page 27:** Changes made to model numbers in table. Note added. **Page 28:** Text added to first line. Several changes and additions made to second table and text after table. **Page 32:** Item 4 changed. **Page 43:** Second note removed. **Page 49:** Several changes made to table. **Page 55:** Note changed. **Page 56:** “and stopping” removed from second line of first paragraph. **Page 66:** Changes made to the explanations for input and output response ON time. **Page 67:** Several changes made to table. Text inserted before “Overall Procedure”. **Page 68:** Text added after itemized list. **Page 71:** Several changes made to notes. **Page 72:** Several changes made to captions. **Page 77:** Text added before screen image. **Page 78:** Text added after second screen image. **Page 84:** Model numbers removed from captions in two places. **Page 86:** Text added in middle of page. **Page 93:** Text and tables added at bottom of page. **Page 102:** Numerical changes made in several places. **Page 120:** Model numbers changed in bottom diagram and text added at bottom of page. **Page 143:** Section added at bottom of page. **Page 147:** Model numbers changed or added in several places. Notes added in two places. **Page 151:** Changes made to first paragraph after table.

OMRON CORPORATION
FA Systems Division H.Q.
66 Matsumoto
Mishima-city, Shizuoka 411-8511
Japan
Tel: (81)55-977-9181/Fax: (81)55-977-9045

Regional Headquarters

OMRON EUROPE B.V.
Wegalaan 67-69, NL-2132 JD Hoofddorp
The Netherlands
Tel: (31)2356-81-300/Fax: (31)2356-81-388

OMRON ELECTRONICS LLC
1 East Commerce Drive, Schaumburg, IL 60173
U.S.A.
Tel: (1)847-843-7900/Fax: (1)847-843-8568

OMRON ASIA PACIFIC PTE. LTD.
83 Clemenceau Avenue,
#11-01, UE Square,
Singapore 239920
Tel: (65)6835-3011/Fax: (65)6835-2711

OMRON

Authorized Distributor:

Cat. No. W367-E1-02

Note: Specifications subject to change without notice.

Printed in Japan

Read and Understand this Manual

Please read and understand this manual before using the product. Please consult your OMRON representative if you have any questions or comments.

Warranty and Limitations of Liability

WARRANTY

OMRON's exclusive warranty is that the products are free from defects in materials and workmanship for a period of one year (or other period if specified) from date of sale by OMRON.

OMRON MAKES NO WARRANTY OR REPRESENTATION, EXPRESS OR IMPLIED, REGARDING NON-INFRINGEMENT, MERCHANTABILITY, OR FITNESS FOR PARTICULAR PURPOSE OF THE PRODUCTS. ANY BUYER OR USER ACKNOWLEDGES THAT THE BUYER OR USER ALONE HAS DETERMINED THAT THE PRODUCTS WILL SUITABLY MEET THE REQUIREMENTS OF THEIR INTENDED USE. OMRON DISCLAIMS ALL OTHER WARRANTIES, EXPRESS OR IMPLIED.

LIMITATIONS OF LIABILITY

OMRON SHALL NOT BE RESPONSIBLE FOR SPECIAL, INDIRECT, OR CONSEQUENTIAL DAMAGES, LOSS OF PROFITS OR COMMERCIAL LOSS IN ANY WAY CONNECTED WITH THE PRODUCTS, WHETHER SUCH CLAIM IS BASED ON CONTRACT, WARRANTY, NEGLIGENCE, OR STRICT LIABILITY.

In no event shall the responsibility of OMRON for any act exceed the individual price of the product on which liability is asserted.

IN NO EVENT SHALL OMRON BE RESPONSIBLE FOR WARRANTY, REPAIR, OR OTHER CLAIMS REGARDING THE PRODUCTS UNLESS OMRON'S ANALYSIS CONFIRMS THAT THE PRODUCTS WERE PROPERLY HANDLED, STORED, INSTALLED, AND MAINTAINED AND NOT SUBJECT TO CONTAMINATION, ABUSE, MISUSE, OR INAPPROPRIATE MODIFICATION OR REPAIR.

Application Considerations

SUITABILITY FOR USE

OMRON shall not be responsible for conformity with any standards, codes, or regulations that apply to the combination of products in the customer's application or use of the products.

At the customer's request, OMRON will provide applicable third party certification documents identifying ratings and limitations of use that apply to the products. This information by itself is not sufficient for a complete determination of the suitability of the products in combination with the end product, machine, system, or other application or use.

The following are some examples of applications for which particular attention must be given. This is not intended to be an exhaustive list of all possible uses of the products, nor is it intended to imply that the uses listed may be suitable for the products:

- Outdoor use, uses involving potential chemical contamination or electrical interference, or conditions or uses not described in this manual.
- Nuclear energy control systems, combustion systems, railroad systems, aviation systems, medical equipment, amusement machines, vehicles, safety equipment, and installations subject to separate industry or government regulations.
- Systems, machines, and equipment that could present a risk to life or property.

Please know and observe all prohibitions of use applicable to the products.

NEVER USE THE PRODUCTS FOR AN APPLICATION INVOLVING SERIOUS RISK TO LIFE OR PROPERTY WITHOUT ENSURING THAT THE SYSTEM AS A WHOLE HAS BEEN DESIGNED TO ADDRESS THE RISKS, AND THAT THE OMRON PRODUCTS ARE PROPERLY RATED AND INSTALLED FOR THE INTENDED USE WITHIN THE OVERALL EQUIPMENT OR SYSTEM.

PROGRAMMABLE PRODUCTS

OMRON shall not be responsible for the user's programming of a programmable product, or any consequence thereof.

Disclaimers

CHANGE IN SPECIFICATIONS

Product specifications and accessories may be changed at any time based on improvements and other reasons.

It is our practice to change model numbers when published ratings or features are changed, or when significant construction changes are made. However, some specifications of the products may be changed without any notice. When in doubt, special model numbers may be assigned to fix or establish key specifications for your application on your request. Please consult with your OMRON representative at any time to confirm actual specifications of purchased products.

DIMENSIONS AND WEIGHTS

Dimensions and weights are nominal and are not to be used for manufacturing purposes, even when tolerances are shown.

PERFORMANCE DATA

Performance data given in this manual is provided as a guide for the user in determining suitability and does not constitute a warranty. It may represent the result of OMRON's test conditions, and the users must correlate it to actual application requirements. Actual performance is subject to the OMRON Warranty and Limitations of Liability.

ERRORS AND OMISSIONS

The information in this manual has been carefully checked and is believed to be accurate; however, no responsibility is assumed for clerical, typographical, or proofreading errors, or omissions.