Cat. No. W420-E1-06

生産終了
DISCONTINUED

SYSMAC CS and CJ Series
CS1W-ETN21 (100Base-TX)
CJ1W-ETN21 (100Base-TX)
Ethernet Units
Construction of Networks

OPERATION MANUAL

OMRON

CS1W-ETN21 (100Base-TX)
CJ1W-ETN21 (100Base-TX)
Ethernet Units
Construction of Networks

Operation Manual

Revised April 2009

Notice:

OMRON products are manufactured for use according to proper procedures by a qualified operator and only for the purposes described in this manual.

The following conventions are used to indicate and classify precautions in this manual. Always heed the information provided with them. Failure to heed precautions can result in injury to people or damage to property.

⚠ DANGER Indicates an imminently hazardous situation which, if not avoided, will result in death or serious injury. Additionally, there may be severe property damage.

⚠ WARNING Indicates a potentially hazardous situation which, if not avoided, could result in death or serious injury. Additionally, there may be severe property damage.

⚠ Caution Indicates a potentially hazardous situation which, if not avoided, may result in minor or moderate injury, or property damage.

OMRON Product References

All OMRON products are capitalized in this manual. The word “Unit” is also capitalized when it refers to an OMRON product, regardless of whether or not it appears in the proper name of the product.

The abbreviation “Ch,” which appears in some displays and on some OMRON products, often means “word” and is abbreviated “Wd” in documentation in this sense.

The abbreviation “PLC” means Programmable Controller. “PC” is used, however, in some Programming Device displays to mean Programmable Controller.

Visual Aids

The following headings appear in the left column of the manual to help you locate different types of information.

Note Indicates information of particular interest for efficient and convenient operation of the product.

1,2,3... 1. Indicates lists of one sort or another, such as procedures, checklists, etc.

© OMRON, 2003

All rights reserved. No part of this publication may be reproduced, stored in a retrieval system, or transmitted, in any form, or by any means, mechanical, electronic, photocopying, recording, or otherwise, without the prior written permission of OMRON.

No patent liability is assumed with respect to the use of the information contained herein. Moreover, because OMRON is constantly striving to improve its high-quality products, the information contained in this manual is subject to change without notice. Every precaution has been taken in the preparation of this manual. Nevertheless, OMRON assumes no responsibility for errors or omissions. Neither is any liability assumed for damages resulting from the use of the information contained in this publication.

Unit Versions of CS/CJ-series

Unit Versions

A “unit version” has been introduced to manage Units in the CS/CJ Series according to differences in functionality accompanying Unit upgrades.

Notation of Unit Versions on Products

The unit version is given to the right of the lot number on the nameplate of the products for which unit versions are being managed, as shown below.

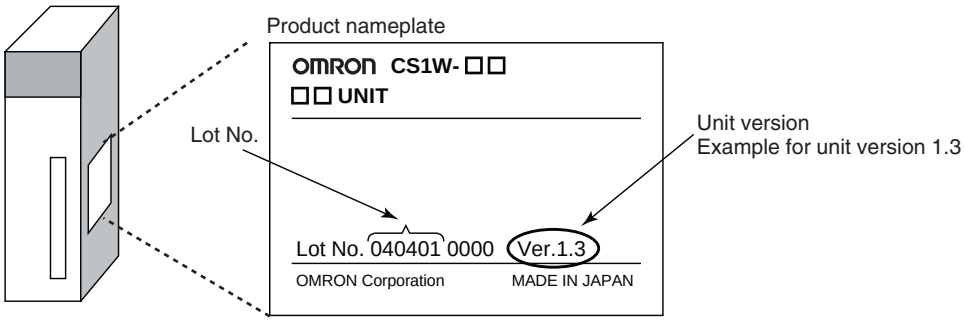

Confirming Unit Versions with Support Software

CX-Programmer version 4.0 can be used to confirm the unit version using the ***Unit Manufacturing Information***.

Note The (unit versions of) Pre-Ver. 2.0 Units cannot be confirmed ***Unit Manufacturing Information***. The following dialog box is displayed.

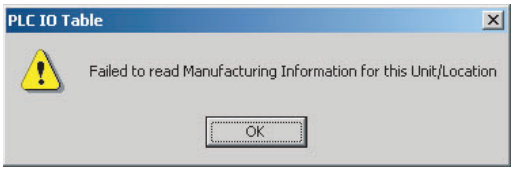

In the *IO Table* Window, right-click and select ***Unit Manufacturing information - CPU Unit.***

The following *Unit Manufacturing information* Dialog Box will be displayed.

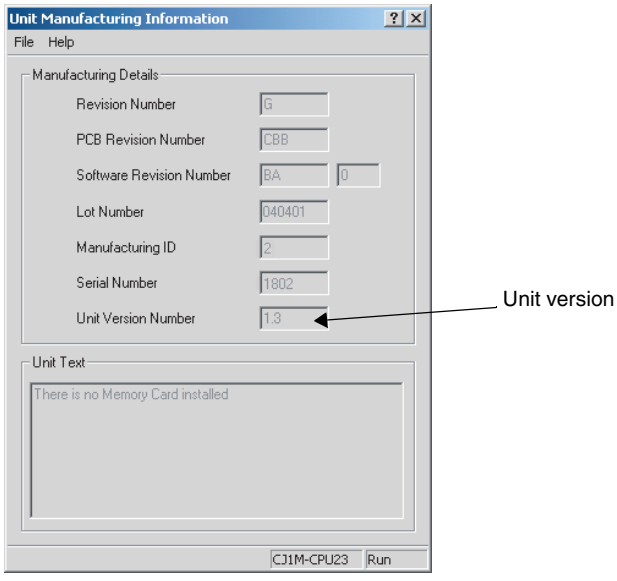

Use the above display to confirm the unit version of the Unit connected online.

Using Unit Version Label

The following unit version label is provided with the Ethernet Unit.

This label can be attached to the front of the Ethernet Unit to differentiate between Ethernet Units with different unit versions.

Unit Version Notation

In this manual, the unit version of a Ethernet Unit is given as shown in the following table.

Product nameplate	Notation used in this manual	Special remarks
Ver. 2.0 or later number shown to right of the lot number	Ethernet Unit Ver. 1.3 or later	Information without reference to specific Unit Versions applies to all versions of the Unit
Blank to the right of lot number	Pre-Ver. 1.3 Ethernet Units	

TABLE OF CONTENTS

PRECAUTIONS xxi

1 Intended Audience xxii
2 General Precautions xxii
3 Safety Precautions xxii
4 Operating Environment Precautions xxiii
5 Application Precautions xxiii
6 Conformance to EC Directives xxv

SECTION 1
Features and System Configuration 1

1-1 Ethernet Unit Function Guide 2
1-2 Features 8
1-3 System Configuration 11
1-4 Specifications 14
1-5 Overview of Communications Functions 17
1-6 Nomenclature and Functions 23
1-7 Comparison with Previous Models 27
1-8 Unit Version Upgrade Information 28

SECTION 2
Installation and Initial Setup 29

2-1 Overview of Startup Procedure 30
2-2 Switch Settings 31
2-3 Mounting to a PLC 33
2-4 Network Installation 34
2-5 Connecting to the Network 38
2-6 Creating I/O Tables 39
2-7 Unit Setup Procedure 41
2-8 Basic Settings 46
2-9 Unit Setup for Particular Applications 50
2-10 Communications Test 52
2-11 Converting from Previous Models 54

SECTION 3
CX-Programmer Unit Setup 61

3-1 Setup 62
3-2 FINS/TCP 64
3-3 DNS 66
3-4 SMTP 67
3-5 POP 68
3-6 Mail Address 69
3-7 Send Mail 70
3-8 Receive Mail 72

TABLE OF CONTENTS

3-9 Auto Adjust Time 74
3-10 HTTP. 75

SECTION 4
Ethernet Unit Memory Allocations. 77

4-1 CIO Area Allocations 78
4-2 DM Area Allocations 86
4-3 Auxiliary Area Data 90

SECTION 5
Determining IP Addresses 93

5-1 IP Addresses 94
5-2 IP Addresses in FINS Communications 96
5-3 Private and Global Addresses 108

SECTION 6
FINS Communications. 115

6-1 Overview of FINS Communications. 116
6-2 FINS/UDP Method 118
6-3 FINS/TCP Method 120
6-4 Creating Routing Tables 124
6-5 Using FINS Applications 128
6-6 Communicating between OMRON PLCs. 137
6-7 Precautions on High Traffic in FINS Communications 155

SECTION 7
FINS Commands Addressed to Ethernet Units. 157

7-1 Command Codes and Response Codes. 158
7-2 Socket Applications 159
7-3 Command/Response Reference 161

SECTION 8
Troubleshooting 203

8-1 Troubleshooting with Indicators 204
8-2 Error Status 205
8-3 Error Log. 206
8-4 Troubleshooting Procedures 213
8-5 Results Storage Area Response Codes 231

TABLE OF CONTENTS

Appendices

A Ethernet Network Parameters 235
B Buffer Configuration 237
C TCP Status Transitions 239
D ASCII Characters 241
E Maintenance 243
F Inspections 245
G Ethernet Unit Web Function 247

Index 253

Revision History 261

About this Manual:

This manual describes the installation and operation of the CS1W-ETN21 and CJ1W-ETN21 Ethernet Units (100Base-TX) and includes the sections described below.

Please read this manual carefully and be sure you understand the information provided before attempting to install or operate the Ethernet Unit. Be sure to read the precautions provided in the following section.

Precautions provides general precautions for using the CS1W-ETN21 and CJ1W-ETN21 Ethernet Units (100Base-TX).

Section 1 introduces the features, describes the system configuration and Unit parts, and provides Unit specifications.

Section 2 explains how to install the Ethernet Unit and make the initial settings required for operation.

Section 3 provides information for setting communications using CX-Programmer.

Section 4 describes the words allocated in the CIO Area and the DM Area for Ethernet Units.

Section 5 explains how to manage and use IP addresses.

Section 6 provides information on communicating on Ethernet Systems and interconnected networks using FINS commands.

Section 7 describes the FINS commands that can be sent to an Ethernet Unit and the responses that are returned by the Ethernet Unit.

Section 8 describes information and procedures that can be used to troubleshoot problems that sometimes occur with Ethernet Unit and Ethernet communications.

Appendices provide information on Ethernet network parameters, the buffer configuration, TCP status transitions, ASCII characters, maintenance, and inspections.

The related *Ethernet Units Operation Manual Construction of Applications* (W421) provides the following information.

Section	Contents
Section 1	Overview of functions for constructing applications.
Section 2	Information on using mail functions to automatically send I/O memory data from OMRON PLCs to personal computers.
Section 3	Information on using mail functions to send commands from OMRON PLCs to personal computers.
Section 4	Information on transferring large files between personal computers and OMRON PLCs.
Section 5	Information on automatically adjusting the OMRON PLC's built-in clock.
Section 6	Information on communicating between general applications (applications not using FINS) and OMRON PLCs.
Section 7	Information on using personal computer and UNIX machine socket interfaces to create applications using FINS communications.

Relevant Manuals

The following table lists CS and CJ-series manuals that contain information relevant to Ethernet Units.

Manual number	Model	Name	Contents
W420	CS1W-ETN21 CJ1W-ETN21	Ethernet Units Operation Manual Construction of Networks (this manual)	Provides information on operating and installing 100Base-TX Ethernet Units, including details on basic settings and FINS communications. Refer to the *Communications Commands Reference Manual* (W342) for details on FINS commands that can be sent to CS-series and CJ-series CPU Units when using the FINS communications service.
W421	CS1W-ETN21 CJ1W-ETN21	Ethernet Units Operation Manual Construction of Applications	Provides information on constructing host applications for 100Base-TX Ethernet Units, including functions for sending/receiving mail, socket service, automatic clock adjustment, FTP server functions, and FINS communications.
W343	CS1W-ETN01 CS1W-ETN11 CJ1W-ETN11	Ethernet Units Operation Manual	Describes the installation and operation of the 10Base-5 and 10Base-T Ethernet Units.
W342	CS1G/H-CPU□□H CS1G/H-CPU-□□EV1 CS1D-CPU□□H CS1D-CPU□□S CJ1M-CPU□□ CS1W-SCU21-V1 CS1W-SCB21-V1/41-V1 CJ1G/H-CPU□□H CJ1G-CPU□□P CJ1G-CPU□□ CJ1W-SCU21-V1/41-V1	Communications Commands Reference Manual	Describes the C-series (Host Link) and FINS communications commands used when sending communications commands to CS-series and CJ-series CPU Units.
W339	CS1G/H-CPU□□H CS1G/H-CPU□□-EV1	Programmable Controllers Operation Manual	Provides an outline of, and describes the design, installation, maintenance, and other basic operations for the CS-series PLCs. Information is also included on features, system configuration, wiring, I/O memory allocations, and troubleshooting. Use together with the *Programmable Controllers Programming Manual* (W394).
W393	CJ1G/H-CPU□□H CJ1G-CPU□□P CJ1M-CPU□□ CJ1G-CPU□□	Programmable Controllers Operation Manual	Provides an outline of, and describes the design, installation, maintenance, and other basic operations for the CJ-series PLCs. Information is also included on features, system configuration, wiring, I/O memory allocations, and troubleshooting. Use together with the *Programmable Controllers Programming Manual* (W394).
W394	CS1G/H-CPU□□H CS1G/H-CPU□□EV1 CS1D-CPU□□H CS1D-CPU□□S CJ1G/H-CPU□□H CJ1G-CPU□□P CJ1G-CPU□□ CJ1M-CPU□□	Programmable Controllers Programming Manual	Describes programming, tasks, file memory, and other functions for the CS-series and CJ-series PLCs. Use together with the *Programmable Controllers Operation Manual* (W339 for CS-series PLCs and W393 for CJ-series PLCs).
W340	CS1G/H-CPU□□H CS1G/H-CPU□□EV1 CS1D-CPU□□H CS1D-CPU□□S CJ1G/H-CPU□□H CJ1G-CPU□□P CJ1G-CPU□□ CJ1M-CPU□□	Programmable Controllers Instructions Reference Manual	Describes the ladder diagram programming instructions supported by CS-series and CJ-series PCs. Use together with the *Programmable Controllers Operation Manual* (W339 for CS-series PLCs and W393 for CJ-series PLCs), and *Programmable Controllers Programming Manual* (W394).

Manual number	Model	Name	Contents
W446	WS02-CXPC□-V8	CX-Programmer Ver. 8.0 Operation Manual	Provides information on how to use the CX-Programmer, a Windows-based programming device, and CX-Net, a Windows-based network configuration tool. Use together with the *Programmable Controllers Operation Manual* (W339 for CS-series PLCs and W393 for CJ-series PLCs), *Programmable Controllers Programming Manual* (W394) and the *Programmable Controllers Instructions Reference Manual* (W340) to perform programming.
W444	CXONE-AL□□C-E	CX-One Setup Manual	Describes operating procedures for the CX-One FA Integrated Tool Package. Refer to this manual for operating procedures for the CX-One FA Integrated Tool Package.
W445	CXONE-AL□□C-E	CX-Integrator Operation Manual	Describes operating procedures for the CX-Integrator network configuration support software for CS/CJ-series PLCs. Refer to this manual for operating procedures for the CX-Integrator network configuration support software for CS/CJ-series PLCs.
W341	CQM1H-PRO01-E CQM1-PRO01-E C200H-PRO27-E	Programming Consoles Operation Manual	Provides information on how to operate the Programming Console. Use together with the *Programmable Controllers Operation Manual* (W339 for CS-series PLCs and W393 for CJ-series PLCs), *Programmable Controllers Programming Manual* (W394) and the *Programmable Controllers Instructions Reference Manual* (W340) to perform programming.
W336	CS1W-SCB21-V1/41-V1 CS1W-SCU21-V1 CJ1W-SCU21-V1/41-V1	Serial Communications Boards and Serial Communications Units Operation Manual	Accessing the PLC connected to the CX-Programmer via Ethernet or the host computer or other device connected to the Serial Communications Board or Unit. Describes the use of Serial Communications Units and Boards, including details on hardware, software, and standard system protocols.

⚠ WARNING Failure to read and understand the information provided in this manual may result in personal injury or death, damage to the product, or product failure. Please read each section in its entirety and be sure you understand the information provided in the section and related sections before attempting any of the procedures or operations given.

Read and Understand this Manual

Please read and understand this manual before using the product. Please consult your OMRON representative if you have any questions or comments.

Warranty and Limitations of Liability

WARRANTY
OMRON's exclusive warranty is that the products are free from defects in materials and workmanship for a period of one year (or other period if specified) from date of sale by OMRON. OMRON MAKES NO WARRANTY OR REPRESENTATION, EXPRESS OR IMPLIED, REGARDING NON-INFRINGEMENT, MERCHANTABILITY, OR FITNESS FOR PARTICULAR PURPOSE OF THE PRODUCTS. ANY BUYER OR USER ACKNOWLEDGES THAT THE BUYER OR USER ALONE HAS DETERMINED THAT THE PRODUCTS WILL SUITABLY MEET THE REQUIREMENTS OF THEIR INTENDED USE. OMRON DISCLAIMS ALL OTHER WARRANTIES, EXPRESS OR IMPLIED.

LIMITATIONS OF LIABILITY
OMRON SHALL NOT BE RESPONSIBLE FOR SPECIAL, INDIRECT, OR CONSEQUENTIAL DAMAGES, LOSS OF PROFITS OR COMMERCIAL LOSS IN ANY WAY CONNECTED WITH THE PRODUCTS, WHETHER SUCH CLAIM IS BASED ON CONTRACT, WARRANTY, NEGLIGENCE, OR STRICT LIABILITY. In no event shall the responsibility of OMRON for any act exceed the individual price of the product on which liability is asserted. IN NO EVENT SHALL OMRON BE RESPONSIBLE FOR WARRANTY, REPAIR, OR OTHER CLAIMS REGARDING THE PRODUCTS UNLESS OMRON'S ANALYSIS CONFIRMS THAT THE PRODUCTS WERE PROPERLY HANDLED, STORED, INSTALLED, AND MAINTAINED AND NOT SUBJECT TO CONTAMINATION, ABUSE, MISUSE, OR INAPPROPRIATE MODIFICATION OR REPAIR.

Application Considerations

SUITABILITY FOR USE

OMRON shall not be responsible for conformity with any standards, codes, or regulations that apply to the combination of products in the customer's application or use of the products.

At the customer's request, OMRON will provide applicable third party certification documents identifying ratings and limitations of use that apply to the products. This information by itself is not sufficient for a complete determination of the suitability of the products in combination with the end product, machine, system, or other application or use.

The following are some examples of applications for which particular attention must be given. This is not intended to be an exhaustive list of all possible uses of the products, nor is it intended to imply that the uses listed may be suitable for the products:

- Outdoor use, uses involving potential chemical contamination or electrical interference, or conditions or uses not described in this manual.
- Nuclear energy control systems, combustion systems, railroad systems, aviation systems, medical equipment, amusement machines, vehicles, safety equipment, and installations subject to separate industry or government regulations.
- Systems, machines, and equipment that could present a risk to life or property.

Please know and observe all prohibitions of use applicable to the products.

NEVER USE THE PRODUCTS FOR AN APPLICATION INVOLVING SERIOUS RISK TO LIFE OR PROPERTY WITHOUT ENSURING THAT THE SYSTEM AS A WHOLE HAS BEEN DESIGNED TO ADDRESS THE RISKS, AND THAT THE OMRON PRODUCTS ARE PROPERLY RATED AND INSTALLED FOR THE INTENDED USE WITHIN THE OVERALL EQUIPMENT OR SYSTEM.

PROGRAMMABLE PRODUCTS

OMRON shall not be responsible for the user's programming of a programmable product, or any consequence thereof.

Disclaimers

CHANGE IN SPECIFICATIONS

Product specifications and accessories may be changed at any time based on improvements and other reasons.

It is our practice to change model numbers when published ratings or features are changed, or when significant construction changes are made. However, some specifications of the products may be changed without any notice. When in doubt, special model numbers may be assigned to fix or establish key specifications for your application on your request. Please consult with your OMRON representative at any time to confirm actual specifications of purchased products.

DIMENSIONS AND WEIGHTS

Dimensions and weights are nominal and are not to be used for manufacturing purposes, even when tolerances are shown.

PERFORMANCE DATA

Performance data given in this manual is provided as a guide for the user in determining suitability and does not constitute a warranty. It may represent the result of OMRON's test conditions, and the users must correlate it to actual application requirements. Actual performance is subject to the OMRON Warranty and Limitations of Liability.

ERRORS AND OMISSIONS

The information in this manual has been carefully checked and is believed to be accurate; however, no responsibility is assumed for clerical, typographical, or proofreading errors, or omissions.

PRECAUTIONS

This section provides general precautions for using the CS1W-ETN21 and CJ1W-ETN21 Ethernet Units (100Base-TX).

The information contained in this section is important for the safe and reliable application of Ethernet Units. You must read this section and understand the information contained before attempting to set up or operate an Ethernet Unit.

1 Intended Audience xxii
2 General Precautions xxii
3 Safety Precautions xxii
4 Operating Environment Precautions xxiii
5 Application Precautions xxiii
6 Conformance to EC Directives xxv
6-1 Applicable Directives xxv
6-2 Concepts xxv

1 Intended Audience

This manual is intended for the following personnel, who must also have knowledge of electrical systems (an electrical engineer or the equivalent).

- Personnel in charge of installing FA systems.
- Personnel in charge of designing FA systems.
- Personnel in charge of managing FA systems and facilities.

2 General Precautions

The user must operate the product according to the performance specifications described in the operation manuals.

Before using the product under conditions which are not described in the manual or applying the product to nuclear control systems, railroad systems, aviation systems, vehicles, combustion systems, medical equipment, amusement machines, safety equipment, and other systems, machines, and equipment that may have a serious influence on lives and property if used improperly, consult your OMRON representative.

Make sure that the ratings and performance characteristics of the product are sufficient for the systems, machines, and equipment, and be sure to provide the systems, machines, and equipment with double safety mechanisms.

This manual provides information for programming and operating the Unit. Be sure to read this manual before attempting to use the Unit and keep this manual close at hand for reference during operation.

⚠ WARNING It is extremely important that a PLC and all PLC Units be used for the specified purpose and under the specified conditions, especially in applications that can directly or indirectly affect human life. You must consult with your OMRON representative before applying a PLC System to the above-mentioned applications.

3 Safety Precautions

⚠ WARNING Do not attempt to take any Unit apart while the power is being supplied. Doing so may result in electric shock.

⚠ WARNING Do not touch any of the terminals or terminal blocks while the power is being supplied. Doing so may result in electric shock.

⚠ WARNING Do not attempt to disassemble, repair, or modify any Units. Any attempt to do so may result in malfunction, fire, or electric shock.

⚠ Caution Execute online editing only after confirming that no adverse effects will be caused by extending the cycle time. Otherwise, the input signals may not be readable.

- Emergency stop circuits, interlock circuits, limit circuits, and similar safety measures must be provided in external control circuits.

⚠ **Caution** Tighten the screws on the terminal block of the AC Power Supply Unit to the torque specified in the operation manual. The loose screws may result in burning or malfunction.

4 Operating Environment Precautions

⚠ **Caution** Do not operate the control system in the following locations:

- Locations subject to direct sunlight.
- Locations subject to temperatures or humidity outside the range specified in the specifications.
- Locations subject to condensation as the result of severe changes in temperature.
- Locations subject to corrosive or flammable gases.
- Locations subject to dust (especially iron dust) or salts.
- Locations subject to exposure to water, oil, or chemicals.
- Locations subject to shock or vibration.

⚠ **Caution** Take appropriate and sufficient countermeasures when installing systems in the following locations:

- Locations subject to static electricity or other forms of noise.
- Locations subject to strong electromagnetic fields.
- Locations subject to possible exposure to radioactivity.
- Locations close to power supplies.

5 Application Precautions

Observe the following precautions when using the Ethernet Unit.

⚠ **WARNING** Always heed these precautions. Failure to abide by the following precautions could lead to serious or possibly fatal injury.

- Always connect to a ground of 100 Ω or less when installing the Units. Not connecting to a ground of 100 Ω or less may result in electric shock.

- Always turn OFF the power supply to the CPU Unit, Slaves, and Communications Units before attempting any of the following. Not turning OFF the power supply may result in malfunction or electric shock.
  - Mounting or dismounting I/O Units, CPU Units, Memory Packs, or Master Units.
  - Assembling the Units.
  - Setting DIP switches or rotary switches.
  - Connecting cables or wiring the system.

⚠ **Caution** Failure to abide by the following precautions could lead to faulty operation of the Ethernet Unit or the system, or could damage the Ethernet Unit. Always heed these precautions.

- Fail-safe measures must be taken by the customer to ensure safety in the event of incorrect, missing, or abnormal signals caused by broken signal lines, momentary power interruptions, or other causes.
- Interlock circuits, limit circuits, and similar safety measures in external circuits (i.e., not in the Programmable Controller) must be provided by the customer.
- Always use the power supply voltages specified in the operation manuals. An incorrect voltage may result in malfunction or burning.
- Take appropriate measures to ensure that the specified power with the rated voltage and frequency is supplied. Be particularly careful in places where the power supply is unstable. An incorrect power supply may result in malfunction.
- Install external breakers and take other safety measures against short-circuiting in external wiring. Insufficient safety measures against short-circuiting may result in burning.
- Do not install the Unit near devices that generate strong high-frequency noise.
- Do not drop the Unit or subject it to excessive vibration or shock.
- Make sure that all the Backplane mounting screws, terminal block screws, and cable connector screws are tightened to the torque specified in the relevant manuals. Incorrect tightening torque may result in malfunction.
- Leave the label attached to the Unit when wiring. Removing the label may result in malfunction if foreign matter enters the Unit.
- Remove the label after the completion of wiring to ensure proper heat dissipation. Leaving the label attached may result in malfunction.
- Use crimp terminals for wiring. Do not connect bare stranded wires directly to terminals. Connection of bare stranded wires may result in burning.
- Double-check all wiring and switch settings before turning ON the power supply. Incorrect wiring may result in burning.
- Wire all connections correctly.
- Mount Units only after checking terminal blocks and connectors completely.
- Make sure that the terminal blocks, expansion cables, and other items with locking devices are locked in place.
- When transporting the Unit, use special packing boxes and protect it from being exposed to excessive vibration or impacts during transportation.

- Check the user program for proper execution before actually running it on the Unit. Not checking the program may result in unexpected operation.
- Observe the following precautions when wiring the communications cable.
  - Separate the communications cables from the power lines or high-tension lines.
  - Do not bend the communications cables past their natural bending radius.
  - Do not pull on the communications cables.
  - Do not place heavy objects on top of the communications cables.
  - Always lay communications cable inside ducts.
  - Use appropriate communications cables.
- Before touching a Unit, be sure to first touch a grounded metallic object in order to discharge any static build-up. Not doing so may result in malfunction or damage.
- Confirm that no adverse effect will occur in the system before attempting any of the following. Not doing so may result in an unexpected operation.
  - Changing the operating mode of the PLC (including the setting of the startup operation mode).
  - Force-setting/force-resetting any bit in memory.
  - Changing the present value of any word or any set value in memory.

6 Conformance to EC Directives

6-1 Applicable Directives

- EMC Directives
- Low Voltage Directive

6-2 Concepts

EMC Directives

OMRON devices that comply with EC Directives also conform to the related EMC standards so that they can be more easily built into other devices or the overall machine. The actual products have been checked for conformity to EMC standards (see the following note). Whether the products conform to the standards in the system used by the customer, however, must be checked by the customer.

EMC-related performance of the OMRON devices that comply with EC Directives will vary depending on the configuration, wiring, and other conditions of the equipment or control panel on which the OMRON devices are installed. The customer must, therefore, perform the final check to confirm that devices and the overall machine conform to EMC standards.

Note Applicable EMS (Electromagnetic Susceptibility) and EMI (Electromagnetic Interference) Standards in the EMC (Electromagnetic Compatibility) standards are as follows:

Unit/Board	EMS	EMI
CS1W-ETN21	EN61000-6-2	EN61000-6-4 (Radiated emission: 10-m regulations)
CJ1W-ETN21		

Low Voltage Directive

Always ensure that devices operating at voltages of 50 to 1,000 V AC and 75 to 1,500 V DC meet the required safety standards for the PLC (EN61131-2).

SECTION 1
Features and System Configuration

This section introduces the features, describes the system configuration and Unit parts, and provides Unit specifications.

1-1 Ethernet Unit Function Guide 2
1-1-1 Overall System Configuration Example 2
1-1-2 Determining the Objectives 2
1-2 Features 8
1-3 System Configuration 11
1-3-1 System Configuration 11
1-3-2 Devices Required for Constructing a Network 11
1-3-3 Setup Area and Related Peripheral Devices 12
1-4 Specifications 14
1-4-1 General Specifications 14
1-4-2 Dimensions 15
1-4-3 Software Configuration. 16
1-5 Overview of Communications Functions 17
1-5-1 FINS Communications Service 17
1-5-2 Socket Services 18
1-5-3 FTP Server Function 20
1-5-4 Mail Send Function. 20
1-5-5 Mail Receive Function 21
1-5-6 Automatic Clock Adjustment Function 22
1-5-7 Specifying Servers by Host Name 22
1-6 Nomenclature and Functions 23
1-6-1 Component Names 23
1-6-2 Indicators 25
1-7 Comparison with Previous Models 27
1-8 Unit Version Upgrade Information 28

1-1 Ethernet Unit Function Guide

1-1-1 Overall System Configuration Example

The following diagram shows an example of an overall system configuration using Ethernet Units.

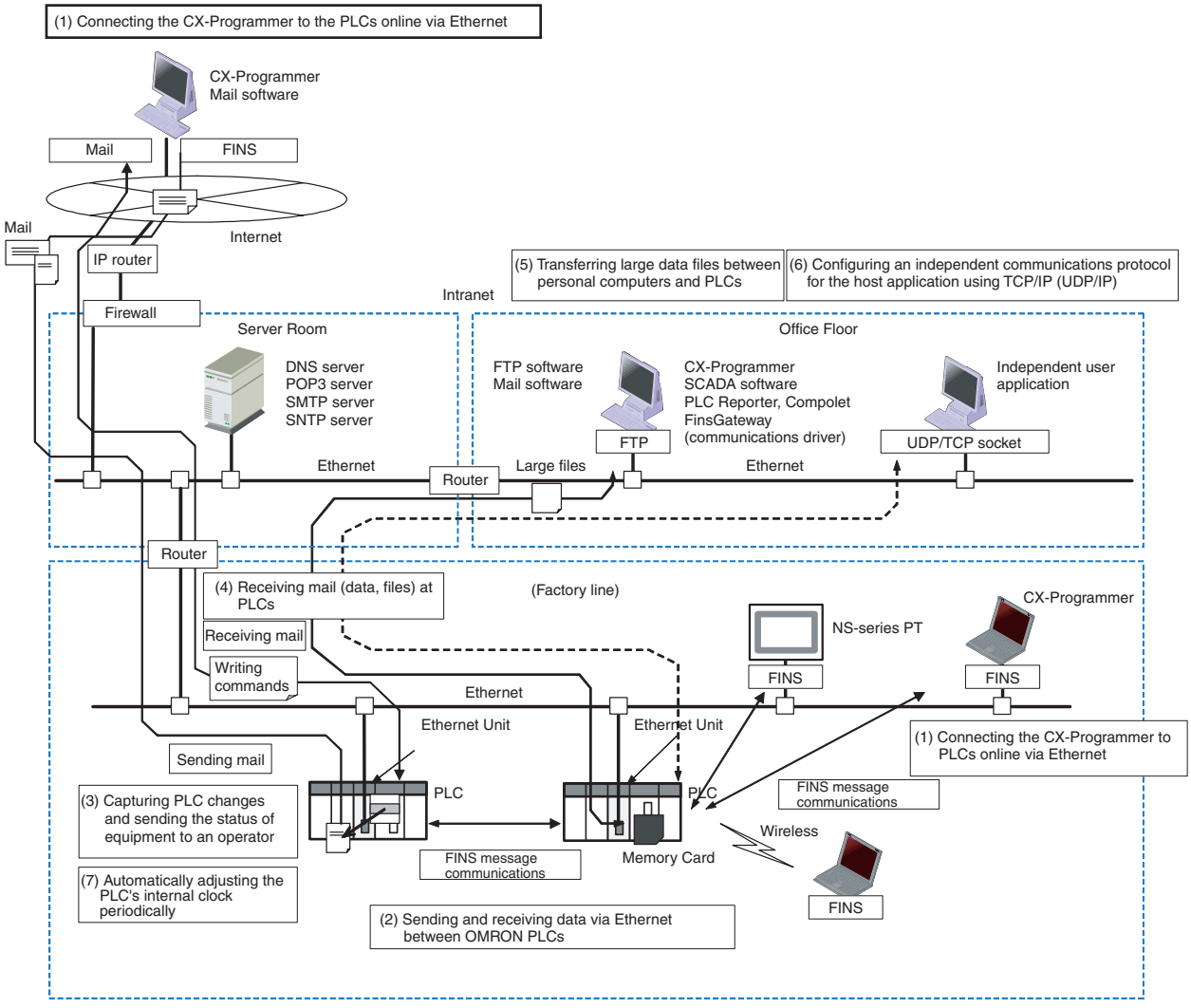

1-1-2 Determining the Objectives

Connecting the CX-Programmer to PLCs Online via Ethernet

Connecting within the Same Segment

Use the UDP/IP version of the FINS communications service (i.e., FINS/UDP). FINS/UDP is supported by many OMRON products and is compatible with earlier Ethernet Units (CS1W-ETN01/ETN11 and CJ1W-ETN11). The CX-Programmer can be connected and used with FINS/UDP even if personal computer middleware (FinsGateway) is not used. FinsGateway (any version) can also be used together with the CX-Programmer.

Connecting through Multiple Segments

Use the TCP/IP version of the FINS communications service (i.e., FINS/TCP). FINS/TCP is a new function supported by these Ethernet Units (CS1W-ETN21 and CJ1W-ETN21). It provides automatic recovery at the TCP/IP layer from communications errors (such as packet loss) that occur during multilevel routing. For CX-Programmer (version 4.0 or higher), FINS/TCP can be used to directly connect to the PLC online. To use lower versions of the CX-Programmer with FINS/TCP, use FinsGateway (version 2003 or higher) as personal computer middleware.

Using Media with Unreliable Connections, Such as a Wireless LAN

Use the TCP/IP version of the FINS communications service (i.e., FINS/TCP). FINS/TCP is a new function supported by these Ethernet Units (CS1W-ETN21 and CJ1W-ETN21). It provides automatic recovery at the TCP/IP layer from communications errors (such as packet loss) resulting from unreliable connections. For CX-Programmer (version 4.0 or higher), FINS/TCP can be used to directly connect to the PLC online. To use lower versions of the CX-Programmer with FINS/TCP, use FinsGateway (version 2003 or higher) as personal computer middleware.

Connecting from a Personal Computer with a Dynamic Private IP Address

Depending on whether or not the connection will be within the same segment, either use an IP address conversion method for dynamic IP addresses in the UDP/IP version of the FINS communications service or use the TCP/IP version of the FINS communications service.

It is possible to connect online to a PLC using the CX-Programmer from a computer serving as a temporarily connected node or a permanent DHCP client.

For CX-Programmer (version 4.0 or higher), FINS/TCP can be used to directly connect to the PLC online. To use lower versions of the CX-Programmer with FINS/TCP, use FinsGateway (version 2003 or higher) as personal computer middleware.

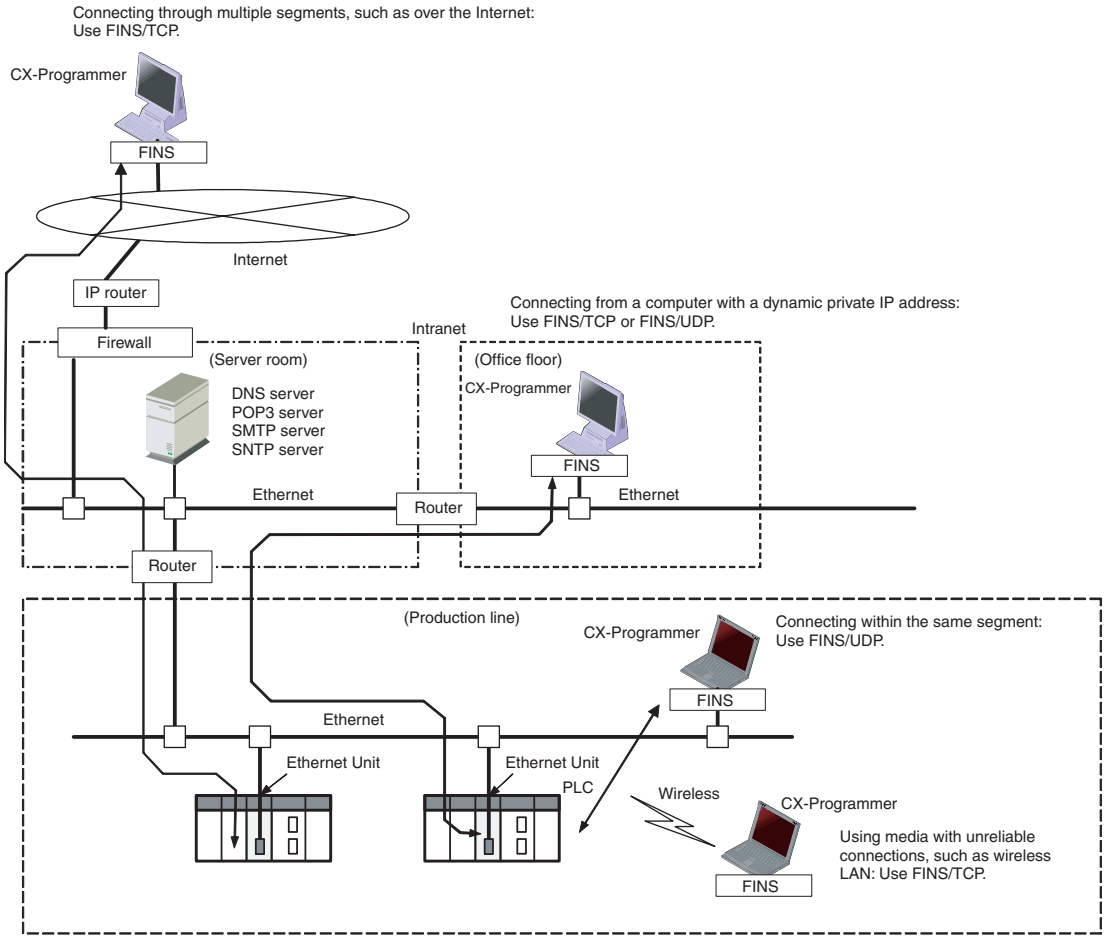

Reference *SECTION 6 FINS Communications*

Exchanging Data between OMRON PLCs using Ethernet

Connecting within the Same Segment

Use the UDP/IP version of the FINS communications service (i.e., FINS/UDP), and construct applications using the SEND(090), RECV(098), and CMND(490) instructions in the ladder program. FINS/UDP is supported by many OMRON products, and is compatible with earlier Ethernet Units (CS1W-ETN01/ETN11 and CJ1W-ETN11). The protocol processing for FINS/UDP is simpler than for FINS/TCP, giving FINS/UDP certain advantages in terms of performance. Another feature of FINS/UDP is that it can be used for broadcasting.

On the other hand, with FINS/UDP it is necessary to provide measures, such as retries, for handling communications errors.

Connecting through Multiple Segments

Use the TCP/IP version of the FINS communications service (i.e., FINS/TCP), and construct applications using the SEND(090), RECV(098), and CMND(490) instructions in the ladder program. FINS/TCP is the initial function supported by this Ethernet Unit (CS1W-ETN21 and CJ1W-ETN21). It provides automatic recovery at the TCP/IP layer from communications errors (such as packet loss) that occur during multilevel routing.

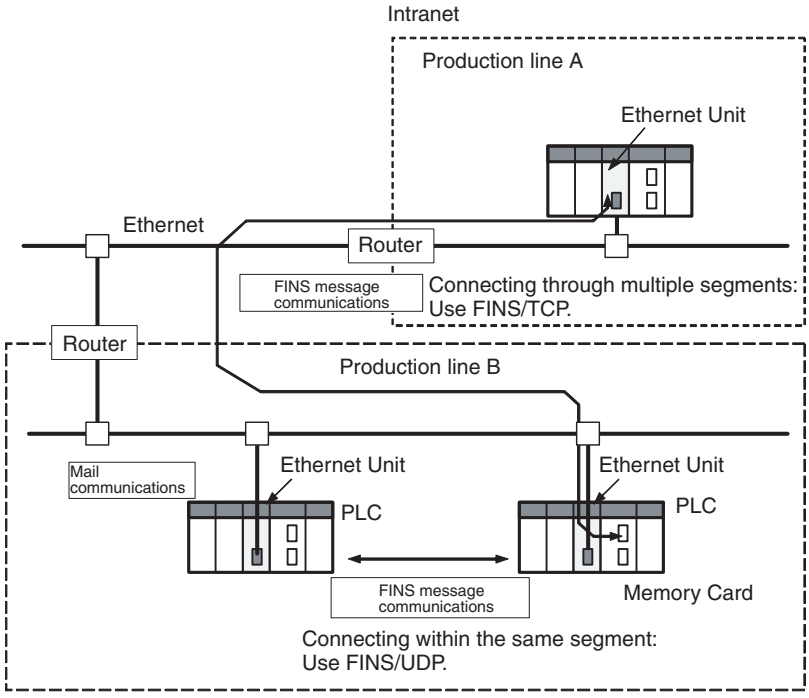

Reference *SECTION 6 FINS Communications*

Monitoring PLC Changes and Sending Equipment Status to the Operator by E-mail

Operation

When the mail send function is used, automatic communications applications via the Internet can be constructed relatively easily. With this Ethernet Unit, the following mail triggers can be set as PLC changes. When these settings can be used, no special ladder program is required for sending e-mail.

- When a particular bit (the Mail Send Switch) turns ON
- When values change in particular words (=, <>, <, <=, >=, >)
- When a particular bit changes (either OFF to ON or ON to OFF)
- When a change occurs at the Ethernet Unit (stored in error log)
- When a change occurs at the CPU Unit (e.g., a non-fatal error, a fatal error, or a mode change)
- At regular intervals

The following data can be sent by e-mail:

- Text (user-created text strings (ASCII data), Ethernet Unit error log data, and status data)
- Attached files (IOM data created automatically by the Ethernet Unit, data tables, and files in File Memory)

To use the mail send function, there must be a separate SMTP server on the network. When using the SMTP server of an Internet Service Provider (ISP), security measures, such as POP before or SMTP, may be required. (This Unit handles POP before SMTP.) In addition to the IP address, the host name used for the DNS service can be specified for the SMTP/POP3 server.

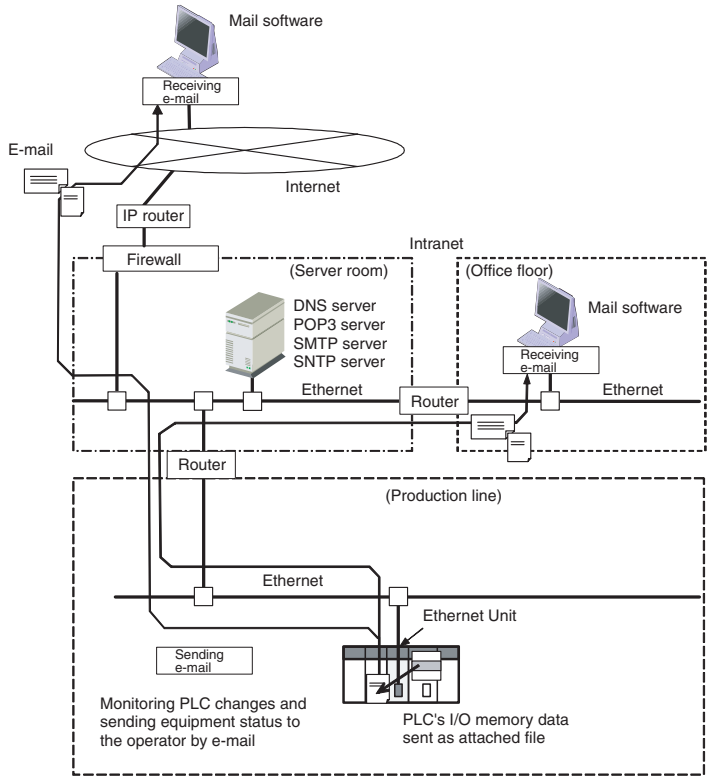

Reference *SECTION 2 Mail Send Function* in the *Operation Manual Construction of Applications*

Receiving E-mail (Data and Files) at the PLC

Operation Use the mail receive function.

When the mail receive function is used, the PLC can be accessed through a mail address, enabling remote applications via the Internet to be constructed relatively easily. With the mail receive function, any of the following remote commands can be specified as e-mail subjects.

- FileWrite (File Write)
- FileRead (File Read)
- FileDelete (File Delete)
- FileList (File List Read)
- UMBackup (User Memory Backup)
- PARAMBackup (Parameter Area Backup)
- IOMWrite (I/O Memory Write)
- IOMRead (I/O Memory Read)
- ChangeMode (Operating Mode Change)
- ErrorLogRead (Error Log Read)
- ErrorLogClear (Error Log Clear)
- MailLogRead (Mail Log Read)
- MailLogClear (Mail Log Clear)
- Test (Mail Test)
- FinsSend (FINS Command Send)

To use the mail receive function, there must be a separate POP3 server on the network. Aside from the IP address, the host name used for DNS service can be specified for the POP3 server.

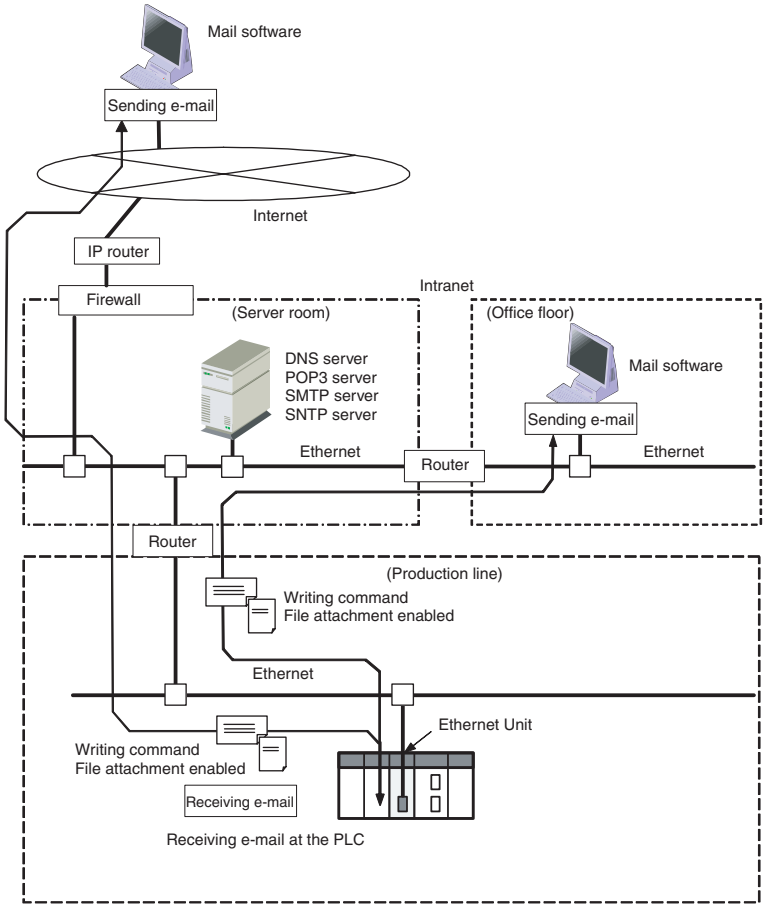

Reference *SECTION 3 Mail Receive Function* in the *Operation Manual Construction of Applications*

Exchanging Large Files between a Personal Computer and PLC

Operation Use the FTP server function.

The FTP server function makes it possible to log in to the Ethernet Unit from a computer (FTP client) as required, and to specify folders and files to be transferred. The following items can be used as PLC File Memory.

- A Memory Card (mounted to the CPU Unit)
- EM File Memory (The portion of the EM Area in the CPU Unit's I/O memory used by the CX-Programmer as File Memory)

Reference *SECTION 4 FTP Server Function* in the *Operation Manual Construction of Applications*

Creating an Original Communications Procedure Using TCP/IP (UDP/IP) for the Host Application or Communicating with PLCs from Another Manufacturer

Operation Using the socket services function, create a communications application in the ladder program.

With the socket services function, TCP/IP or UDP/IP can be used directly to receive data. Use the socket services to create applications based on manipulating control bits or the CMND(490) instruction.

Reference *SECTION 4 Socket Service Function* in the *Operation Manual Construction of Applications*

Automatically Adjusting the PLC's Internal Clock at Regular Intervals

Operation

Use the automatic clock adjustment function.

With the automatic clock adjustment function, the SNTP server's clock is taken as the standard for automatically adjusting the built-in clock of the PLC connected to the Ethernet Unit. The adjustment can be regularly executed at a specified time (once a day) and it can be executed each time by the ladder program.

To use the automatic clock adjustment function, there must be a separate SNTP server on the network. Aside from the IP address, the host name used for DNS service can be specified for the SNTP server.

Reference

SECTION 5 Automatic Clock Adjustment Function in the *Operation Manual Construction of Applications*

1-2 Features

Compatibility and Speed

The transmission medium has been upgraded to 100Base-TX, while compatibility with the functions and application interfaces of the existing Ethernet Unit models (CS1W-ETN01, CS1W-ETN11, and CJ1W-ETN11) has been maintained. Moreover, processing speed has been improved so that the system response performance for the same FINS message applications is now up to four times faster.

Various Protocols Available on Ethernet

A variety of protocols makes available a wide range of applications for use on an Ethernet network. The protocols that can be selected include sending and receiving data by TCP/IP or UDP/IP (socket services), sending and receiving commands by OMRON's standard protocol FINS, transferring files by FTP, sending and receiving e-mail by SMTP/POP3, and automatically adjusting the PLC's internal clock by SNTP.

A communications service can be selected according to need, allowing the PLC to be flexibly integrated with the Ethernet information network.

Communications by UDP/IP and TCP/IP (Socket Services Function)

The standard Ethernet protocols, UDP/IP and TCP/IP, are supported, making it possible to communicate with a wide range of devices, workstations, computers, and Ethernet Units from other manufacturers.

Up to eight ports can be used for various protocols, enabling the use of various applications.

Simplified Socket Services

Without using the CMND(490) instruction, the socket services function for TCP or UDP can be simplified by presetting parameters and using dedicated bits. In addition, the size of received data accumulated in the reception buffer is now stored, and a Data Received Flag has been added. These new features eliminate the need for ladder programs to monitor the timing for completion of instructions and socket service processing, and thus reduce the amount of labor required for program development.

Starting with unit version 1.5, the performance of sending and receiving has been improved using optional settings for the TCP or UDP socket services using specific bits in memory. Also, a linger socket option has been added to the TCP socket services. Specifying this option enables open processing immediately with the same port number without having to wait (approximately 1 min.) until the port number opens after the socket closes.

Improved FINS Message Communications

The following functions have been improved over previous Ethernet Unit models. They allow the scale of the system to be increased, and can give greater flexibility to the system configuration including the host computer.

- Expanded number of nodes (to 254 max., from 126 max.)
- Communications are now enabled even if the host computer's IP address is dynamic. (DHCP client computers can be handled, including TCP/IP and UDP/IP.)
  → Previously IP addresses for host computers could be fixed only.
  → For Ethernet Units with Unit Ver. 1.3 or later, the Unit can be protected against access from nodes with dynamically changed IP addresses (set to be fixed only).
- An automatic client FINS node address allocation function now makes it possible to connect online to the PLC even if no FINS node address has been set for the host computer.
  → Previously online connection to the PLC was possible only after a FINS node address was set for the host computer.
- FINS message communications are now enabled in TCP/IP (with up to 16 simultaneous connections), so a system can now utilize FINS message communications in both UDP/IP and TCP/IP.
  → Previously only UDP/IP could be used.
- Multiple FINS applications (such as the CX-Programmer) on the same computer can now be connected online to the PLC via Ethernet (in either TCP/IP or UDP/IP).
  → Previously when one FINS application on a computer was connected online to the PLC, it was impossible to connect any other at the same time.

Transferring Data Files between Host Computers (FTP Server Function)

A built-in FTP server function enables data files in the PLC to be read from a workstation or computer with an FTP client function, and for data to be written to the PLC. Large amounts of data can be transferred at a time from clients, without requiring ladder programming.

Additional E-mail Functions

With previous Ethernet Unit models (CS1W-ETN01/CS1W-ETN11/CJ1W-ETN11), e-mail could sent only from the Ethernet Unit, and the data that could be sent was limited to user-created ASCII text data and system data. Now the following e-mail functions have been added.

Mail Receive Function (Receiving Commands for the PLC by E-mail)

Commands for the PLC (mail remote commands) can be written into e-mail, and the Ethernet Unit can receive them, execute them, and send responses by e-mail.

E-mail File Attachment Function

This function can be linked to the CS/CJ File Memory function.

- The Ethernet Unit can automatically generate data files (6,000 words maximum per file) from the CPU Unit's I/O memory status, and send them to specified e-mail addresses as e-mail attachments. It can also send program files from the Memory Card (up to 1 MB) to specified e-mail addresses as e-mail attachments.
- In addition to using the existing Mail Send Switch, or having e-mail sent at regular intervals, it is possible to set triggers for sending e-mail (for example, by having e-mail sent when a PV in the CPU Unit's I/O memory reaches a certain value (size comparison), or when the bit at a specified address turns ON).
- Up to eight of these e-mail send conditions (destination, trigger type, etc.) can be preregistered so that e-mail will be sent automatically whenever the conditions are met.

Note The e-mail functions require a separate mail server (SMTP/POP3).

Automatic PLC Internal Clock Adjustment

The built-in clock of the PLC connected to the Ethernet can be automatically adjusted, with the SNTP server clock taken as the standard. Automatic adjustments through the entire system enable the various records generated by production equipment to be managed according to clock information and analyzed.

Note The automatic clock adjustment requires a separate SNTP server.

Specification of Servers by Host Name

In addition to directly specifying the IP address for a SMTP, POP3, or SNTP server, it is also possible (by means of the Ethernet Unit's DNS client function) to specify the server by host name. This enables automatic searches for IP addresses for purposes such as system checking, even when the IP addresses for servers have been changed.

Note
(1) A separate DNS server is required to specify servers by host name using DNS.
(2) The IP address is specified directly for the DNS server.

Classless IP Address Settings Using CIDR

Starting from unit version 1.5, it is possible to use classless inter-domain routing (CIDR) by specifying the subnet class using an option setting. This enables greater flexibility in specification by eliminating the need to have the network ID component of the IP address be dependent on the class.

Use Web Function to Read Ethernet Unit Settings and Status

A Web function is provided in Ethernet Units with Unit Ver. 1.3 or later. This enables use of a Web browser to read the Ethernet Unit’s system settings and statuses.

Network Connection with Controller Link

The Ethernet information network can be connected to the Controller Link control system network by using the FINS communications service function. This enables a PLC on a Controller Link network to be monitored from a PLC on an Ethernet network, and it allows data to be exchanged between them.

Full Range of Functions for Handling Troubles

A full range of functions is provided for promptly handling any troubles that may arise.

- Self-diagnostic function when power is turned ON
- Remote node connection check by PING command
- Remote node connection check by internode test
- Error log for recording error information when an error occurs
- Notification by e-mail when an error occurs

1-3 System Configuration

1-3-1 System Configuration

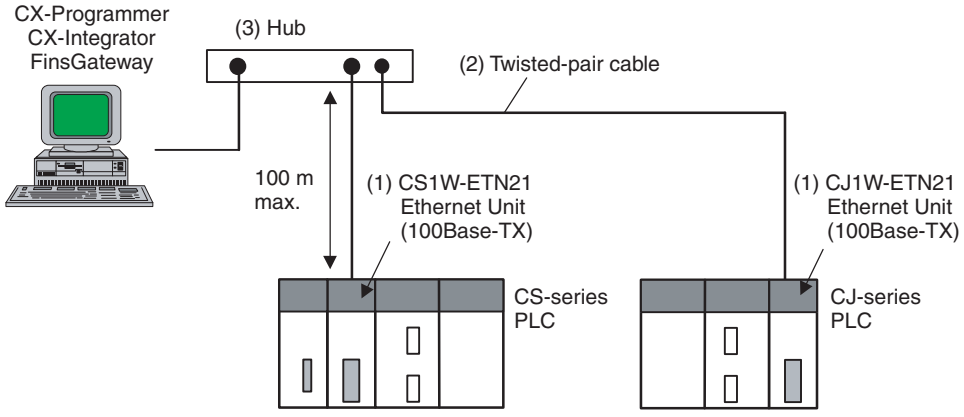

1-3-2 Devices Required for Constructing a Network

The basic configuration for a 100Base-TX Ethernet System consists of one hub to which nodes are attached in star form using twisted-pair cable.

The devices shown in the following table are required to configure a network with 100Base-TX-type CS1W-ETN21 and CJ1W-ETN21 Ethernet Units, so prepare them in advance.

Network device	Contents
(1) CS-series Ethernet Units (CS1W-ETN21) or CJ-series Ethernet Units (CJ1W-ETN21)	These Ethernet Units are Communications Units that connect a CS-series or CJ-series PLC to 100Base-TX Ethernet networks. (They can also be used as 10Base-T.)
(2) Twisted-pair cable	This is twisted-pair cable for connecting 100Base-TX-type Ethernet Units to the hub, with an RJ45 Modular Connector at each end. Use a category 3, 4, 5, or 5e UTP (unshielded twisted-pair) or STP (shielded twisted-pair) cable.
(3) Hub	This is a relay device for connecting multiple nodes in a star LAN.

Recommended Hubs

For details on recommended devices for constructing a network, refer to *2-4 Network Installation*.

1-3-3 Setup Area and Related Peripheral Devices

Making Settings in the CPU Bus Unit System Setup Area (with the CX-Programmer)

For the Ethernet Unit to function as a node on an Ethernet network, make the settings, as required, in the CPU Bus Unit System Setup Area allocated in non-volatile memory in the CPU Unit.

Use the CX-Programmer to make the settings (by connecting online from the I/O Table Window, selecting the Ethernet Unit, and then selecting *Unit Setup*). Each time the Ethernet Unit is turned ON or restarted, it reads and uses the contents of the CPU Bus Unit System Setup Area as the settings for the communications services.

If setting items for expanded functionality of the Ethernet Unit are not displayed, make the settings after updating the Support Software using an auto update or by using the Web function of the Ethernet Unit.

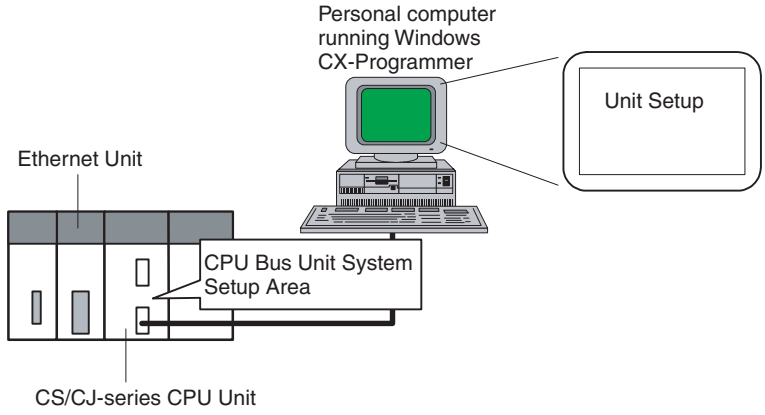

Making Settings in the Routing Table Area (with CX-Integrator)

OMRON Communications Units use OMRON's original FINS network system. Make the settings for the FINS network and the relay path, as required, in the Routing Table Area allocated to the non-volatile memory in the CPU Unit.

Use CX-Integrator to make the settings. (CX-Integrator is software that comes with the CX-One and is automatically installed when the CX-One is installed.) Each time the Ethernet Unit is turned ON or restarted, it reads the contents of the Routing Table Area as the settings for FINS network.

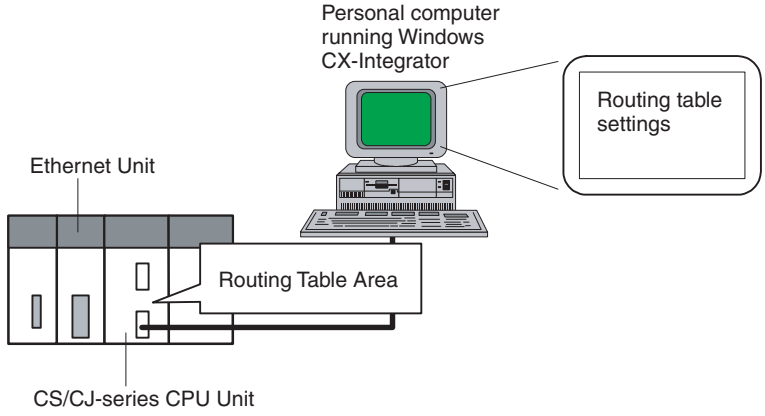

Middleware for FINS Communications Applications on a Personal Computer (FinsGateway)

FinsGateway can be used as middleware when constructing communications applications on a personal computer for a FINS network, using Visual C++ or Visual BASIC. The CX-Programmer and CX-Integrator can also be connected online through FinsGateway. When FINS/UDP is used in the FINS communications service, all versions of FinsGateway can be used.

When FINS/TCP is used in the FINS communications service, only FinsGateway Version 2003 or higher can be used.

When the CX-Programmer and CX-Integrator are connected online by FINS/TCP, FinsGateway Version 2003 or higher must be used.

For CX-Programmer Ver. 4.0 or higher, FINS/TCP can be used to directly connect to the PLC online.

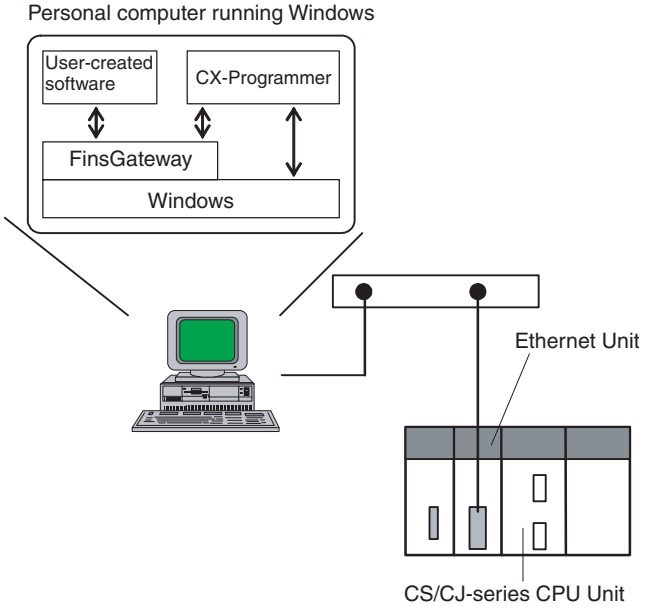

1-4 Specifications

1-4-1 General Specifications

CS-series Ethernet Unit

Item		Specifications	
Model number		CS1W-ETN21	
Type		100Base-TX (Can be used as 10Base-T)	
Applicable PLCs		CS-series PLCs	
Unit classification		CS-series CPU Bus Unit	
Mounting location		CPU Rack or Expansion Rack	
Number of Units that can be mounted		4 max. (including Expansion Racks)	
Transfer specifications	Media access method	CSMA/CD	
	Modulation method	Baseband	
	Transmission paths	Star form	
	Baud rate	100 Mbit/s (100Base-TX)	10 Mbit/s (10Base-T)
	Transmission media	Unshielded twisted-pair (UDP) cable Categories: 5, 5e Shielded twisted-pair (STP) cable Categories: 100 Ω at 5, 5e	Unshielded twisted-pair (UDP) cable Categories: 3, 4, 5, 5e Shielded twisted-pair (STP) cable Categories: 100 Ω at 3, 4, 5, 5e
	Transmission distance	100 m (distance between hub and node)	
	Number of cascade connections	No restrictions if switching hubs are used.	
Current consumption (Unit)		380 mA max. at 5 V DC	
Weight		200 g max.	
Dimensions		35 × 130 × 101 mm (W × H × D)	
Other general specifications		Conform to general specifications for the SYSMAC CS Series.	

CJ-series Ethernet Unit

Item		Specifications	
Model number		CJ1W-ETN21	
Type		100Base-TX (Can be used as 10Base-T)	
Applicable PLCs		CJ-series PLCs	
Unit classification		CJ-series CPU Bus Unit	
Mounting location		CPU Rack or Expansion Rack	
Number of Units that can be mounted		4 max. (including Expansion Racks)	
Transfer specifications	Media access method	CSMA/CD	
	Modulation method	Baseband	
	Transmission paths	Star form	
	Baud rate	100 Mbit/s (100Base-TX)	10 Mbit/s (10Base-TX)
	Transmission media	Unshielded twisted-pair (UDP) cable Categories: 5, 5e Shielded twisted-pair (STP) cable Categories: 100 Ω at 5, 5e	Unshielded twisted-pair (UDP) cable Categories: 3, 4, 5, 5e Shielded twisted-pair (STP) cable Categories: 100 Ω at 3, 4, 5, 5e
	Transmission distance	100 m (distance between hub and node)	
	Number of cascade connections	No restrictions if switching hubs are used.	
Current consumption (Unit)		370 mA max. at 5 V DC	
Weight		100 g max.	
Dimensions		31 × 90 × 65 mm (W × H × D)	
Other general specifications		Conform to general specifications for the SYSMAC CJ Series.	

1-4-2 Dimensions

CS1W-ETN21

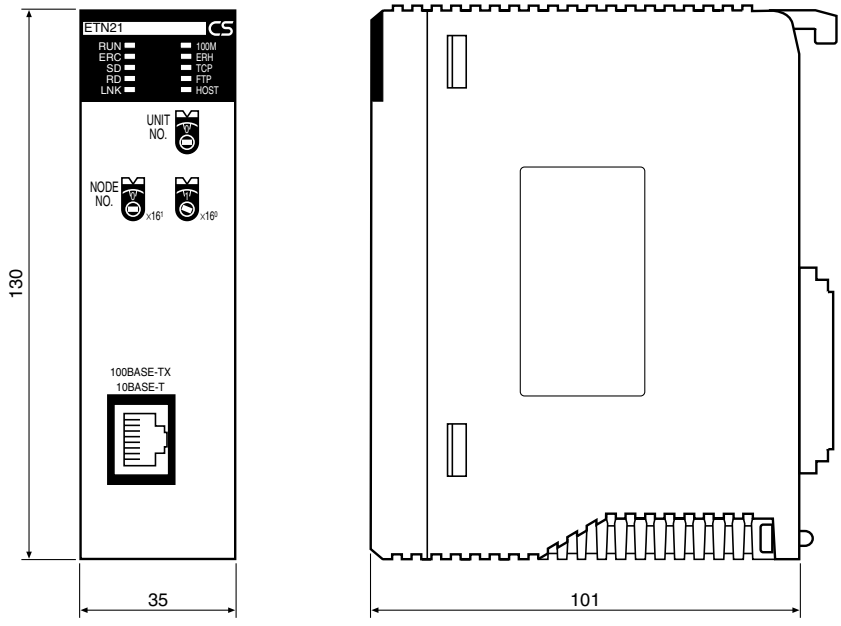

(Unit: mm)

CJ1W-ETN21

Front **Back**

- Unit Version 1.5 or Later
- Unit Version 1.4 or Earlier

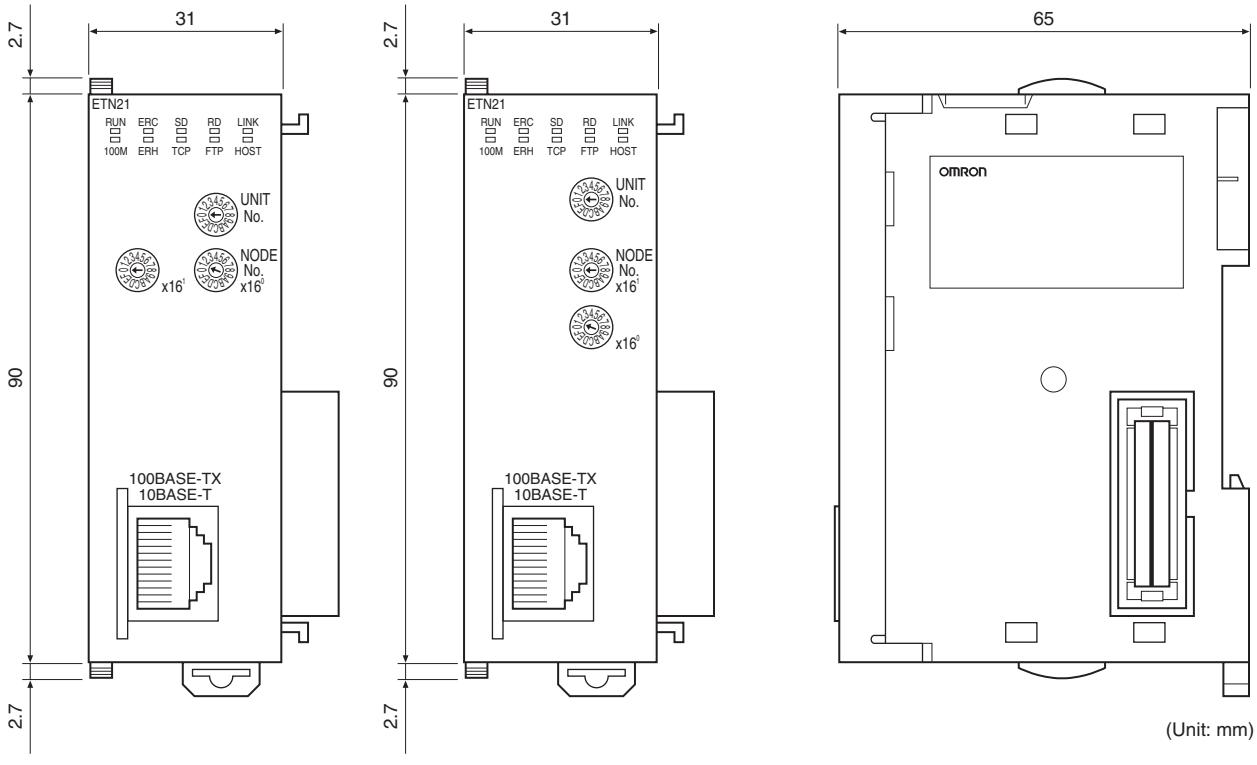

(Unit: mm)

1-4-3 Software Configuration

The software supported by the Ethernet Unit runs in the layers shown in the following diagram. The components that form the various layers are defined below the diagram.

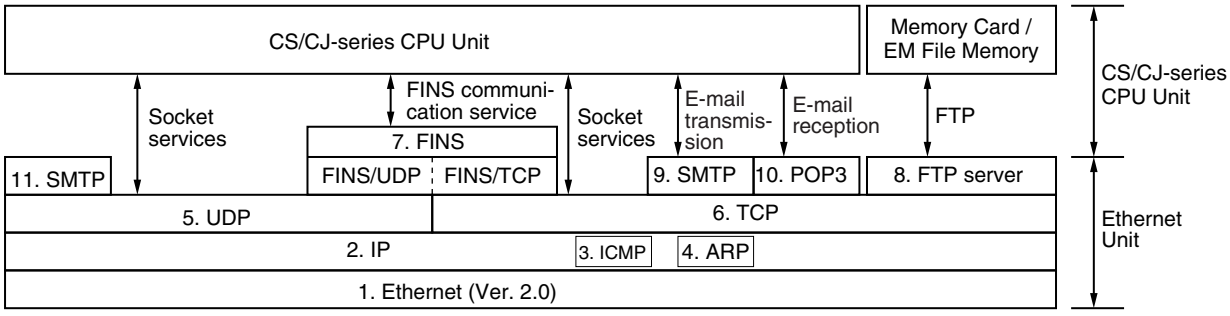

1,2,3...

1. Ethernet (Ver. 2.0)
   The Version 2.0 Ethernet frame format is used for communications.
2. IP (Internet Protocol)
   Transfers datagrams to destination nodes using IP addresses.
3. ICMP (Internet Control Message Protocol)
   Supports IP communications by signalling errors in data transfers.
4. ARP (Address Resolution Protocol)
   Determines the Ethernet address (i.e., physical address) by broadcasting based on the target IP address.
5. UDP (User Datagram Protocol)
   Performs data communications. Data resends, priority control, flow control, and other measures to ensure communications reliability are not performed for UDP communications, so the transmitted data may not arrive at the destination node. To increase reliability, it is necessary to program special measures into the user applications.
6. TCP (Transmission Control Protocol)
   Performs communications after establishing a connection (i.e., a virtual circuit) with the destination node, providing a highly reliable communications service.
7. FINS (Factory Interface Network Service)
   A protocol that sends messages between PLCs on any of various OMRON FA networks. To ensure that transmitted messages arrive at the destination node, it is necessary to program special measures such as retry processing into the user's applications.
8. FTP (File Transfer Protocol)
   Transfers data files.
9. SMTP (Simple Mail Transfer Protocol)
   A communications protocol for sending e-mail by TCP/IP.
10. POP3 (Post Office Protocol Ver. 3.0)
    A communications protocol for receiving e-mail by TCP/IP.
11. SNTP (Simple Network Time Protocol)
    A communications protocol for automatic clock adjustment by UDP/IP.
12. DNS (Domain Name System)
    A communications protocol for determining IP address names according to UDP/IP and TCP/IP.

1-5 Overview of Communications Functions

1-5-1 FINS Communications Service

Basic Functions

FINS commands can be sent to or received from other PLCs or computers on the same Ethernet network by executing SEND(090), RECV(098), or CMND(490) instructions in the ladder diagram program. This enables various control operations such as the reading and writing of I/O memory between PLCs, mode changes, and file memory operations.

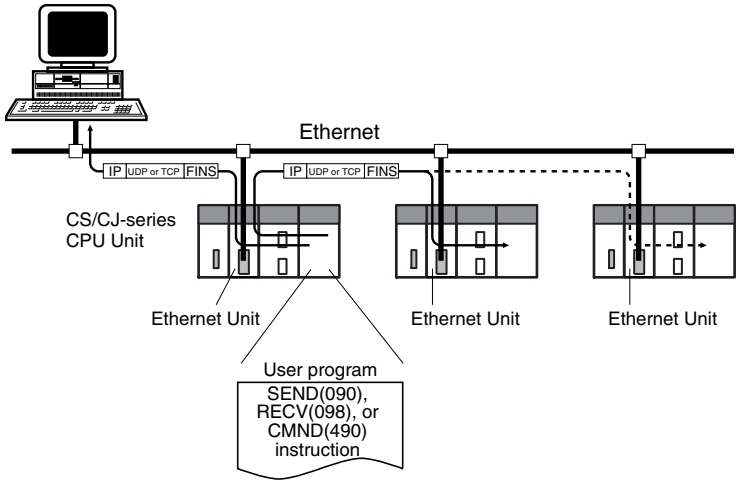

Executing, from the host computer, FINS commands with UDP/IP or TCP/IP headers enables various control operations, such as the reading and writing of I/O memory between PLCs, mode changes, and file memory operations.

For example, it is possible to connect online via Ethernet from FINS communications applications such as the CX-Programmer, and to perform remote programming and monitoring. (See note.)

Note Use CX-Programmer version 4.0 to use TCP/IP. For lower versions of CX-Programmer, FinsGateway Version 2003 or higher is required to use TCP/IP.

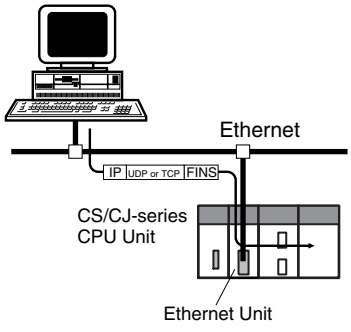

The FINS gateway function enables access to PLCs on not only the same Ethernet network but on various other networks, including SYSMAC LINK and Controller Link.

Upgraded Functions

With the CS1W-ETN21 and CJ1W-ETN21, the following functions have been upgraded.

- The FINS communications service can be executed not only with UDP/IP but also with TCP/IP, and it is even possible to use FINS communications with both UDP/IP and TCP/IP together on the same network. Using TCP/IP makes FINS communications highly reliable.

- Even if the IP address and UDP port number of the host computer (a DHCP client computer) are changed, it is still possible for the host computer to send FINS commands to PLCs on the Ethernet network and to receive responses. When UDP is used, either the automatic generation (dynamic) method or the IP address table method must be selected for IP address conversion. When TCP is used, changes in IP address and TCP port numbers are handled automatically.
- Multiple FINS applications (CX-Programmer and user-created application programs) at the same computer can be connected online to a PLC via Ethernet (using either TCP/IP or UDP/IP).

1-5-2 Socket Services

The socket services allow devices on the Ethernet to send and receive various data using either the UDP or TCP protocol.

Manipulating Dedicated Control Bits

One way to use socket services is to set the required parameters in the parameter area allocated in the DM Area, and then to request particular UDP or TCP socket services by turning ON dedicated control bits in memory. When the Ethernet Unit has completed the requested process, the same bit is turned OFF to provide notification. Data that is sent or received is automatically handled according to the I/O memory locations specified in the parameter area.

There is no need to execute the CMND(490) instruction or to monitor the completion timing and actual processing of the instruction, so this helps to simplify ladder programming.

A total of eight ports (UDP and TCP combined) can be used for socket services.

Starting with unit version 1.5, the performance of sending and receiving has been improved by using the option settings.

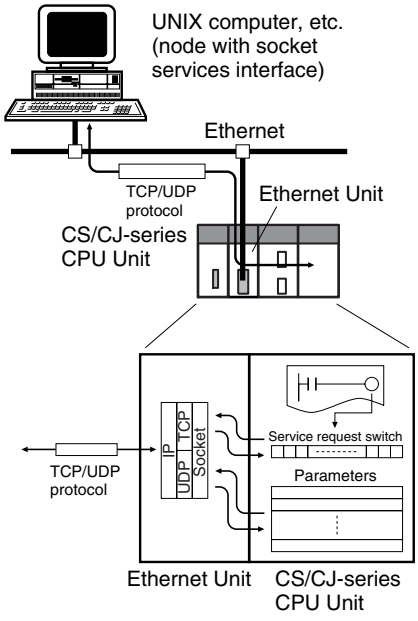

Executing CMND(490)

Another way to use socket services is to request a UDP or TCP socket service by sending a FINS command to the Ethernet Unit by executing CMND(490) from the CPU Unit. When the Ethernet Unit receives the socket service request, it returns a response to the CPU Unit to confirm that it received the request, and then begins the requested processing. When the processing is completed, the results are stored in the Results Storage Area in the CPU Unit.

Eight TCP ports and eight UDP ports can be used.

Improved TCP Socket Interface

The TCP socket interface has been improved. The size of received data accumulated in the reception buffer is now stored, and a Data Received Flag has been added, enabling the TCP socket's receive program to be executed after the required data has been accumulated in the Ethernet Unit's reception buffer. The keep-alive setting has also been enabled for TCP socket services.

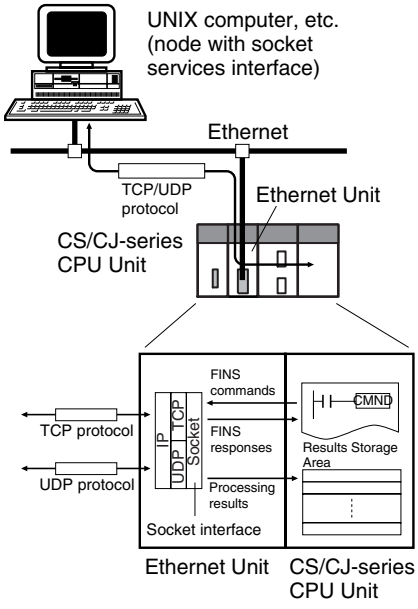

1-5-3 FTP Server Function

The Ethernet Unit has a built-in FTP server, so other computers on the Ethernet can read or write individual files on a Memory Card mounted to the CPU Unit or in EM File Memory. This allows files to be exchanged between the host computer and the PLC, with the host computer functioning as an FTP client and the PLC as an FTP server.

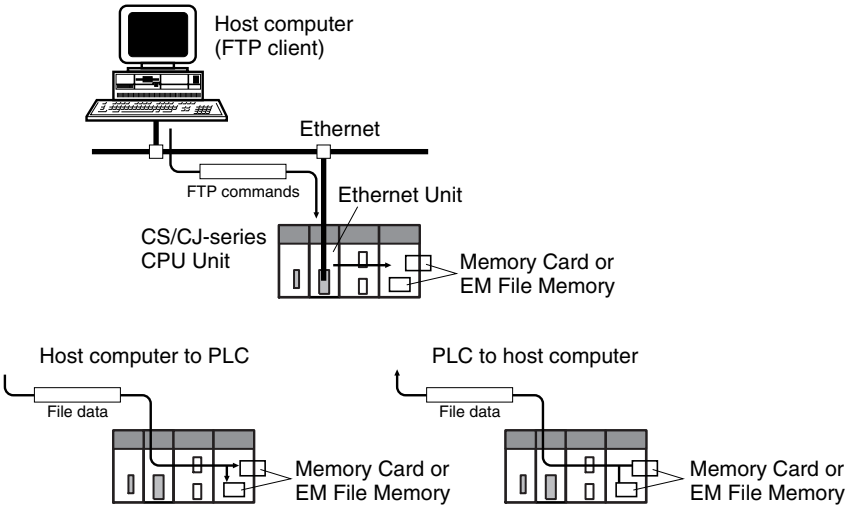

1-5-4 Mail Send Function

This function automatically sends data in the CPU Unit's I/O memory (or a file on a Memory Card) as an e-mail attachment from the Ethernet Unit to specified e-mail addresses when a pre-specified PLC condition is met. User-created data (in ASCII), error log data, and status data in the CPU Unit can all be sent as text.

E-mail can be sent over the Internet, and not just within the intranet.

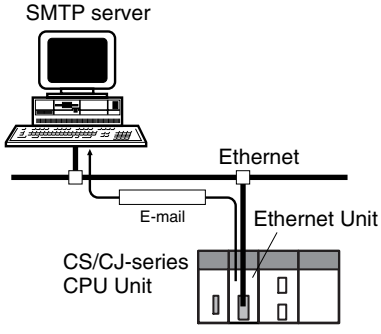

The e-mail can be sent on any of the following types of timing:

- When the Mail Send Switch turns ON
- When the value of a specified word meets a condition
- When the value of a specified bit meets a condition
- When an error is recorded in the Ethernet Unit's error log
- When the CPU Unit's operating mode is changed
- At regular intervals

Note (1) Depending on the Internet service provider (ISP), the use of POP before SMTP may be defined from the standpoint of security considerations. (This Unit handles POP before SMTP.)

(2) An SMTP server is required to use the mail send function.

(3) Mail server settings require specialized knowledge, so they should always be handled by the network administrator.

(4) Be sure that you have a clear understanding of the mail system before using this function.

(5) Mail my not always be delivered. Depending on factors such as the condition of the network, mail that has been sent may not arrive at its destination.

1-5-5 Mail Receive Function

With the mail receive function, the user writes a command into the e-mail and then sends the e-mail to the Ethernet Unit. The Ethernet Unit receives e-mail at regular intervals, executes the commands, and sends back responses by e-mail.

E-mail can be received over the Internet, and not just from within the intranet.

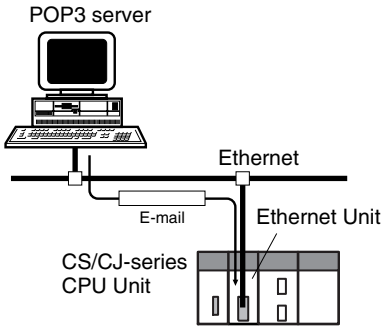

The following types of commands can be sent to the PLC: I/O memory read and write, backup, operating mode changes, and file transfers (of 1 Mbyte or less).

Note

(1) A POP3 server is required to use the mail receive function.

(2) Mail server settings require specialized knowledge, so they should always be handled by the network administrator.

(3) Be sure that you have a clear understanding of the mail system before using this function.

(4) Mail may not always be delivered. Depending on factors such as the condition of the network, mail that has been sent may not arrive at its destination.

1-5-6 Automatic Clock Adjustment Function

The Ethernet Unit can acquire clock information from the SNTP server at a particular time or when a dedicated bit turns ON, and it can refresh the internal clock information of the CPU Unit to which it is mounted.

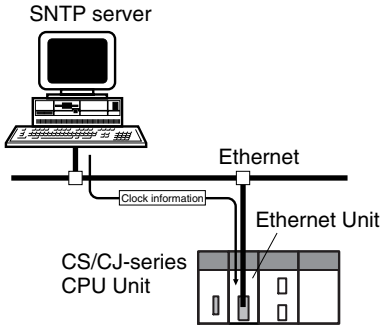

Note
(1) An SNTP server is required to use this function.
(2) SNTP server settings require specialized knowledge, so they should always be handled by the network administrator.
(3) Be sure that you have a clear understanding of the mail system before using.
(4) When using the Internet, depending on the condition of the network it may not be possible to acquire the clock information.

1-5-7 Specifying Servers by Host Name

POP servers, SMTP servers, and SNTP servers can be specified by host name rather than by IP address by using of the DNS client function.

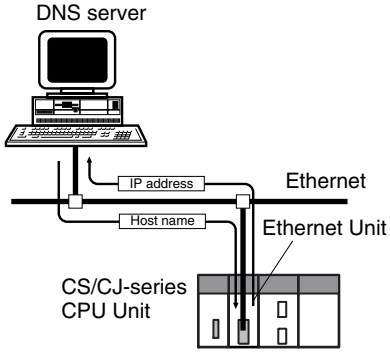

Note A DNS server is required to specify servers by host name.

1-6 Nomenclature and Functions

This section describes Ethernet Unit component names, settings, and LED indicators.

1-6-1 Component Names

CS-series Ethernet Units

CS1W-ETN21 (100Base-TX)

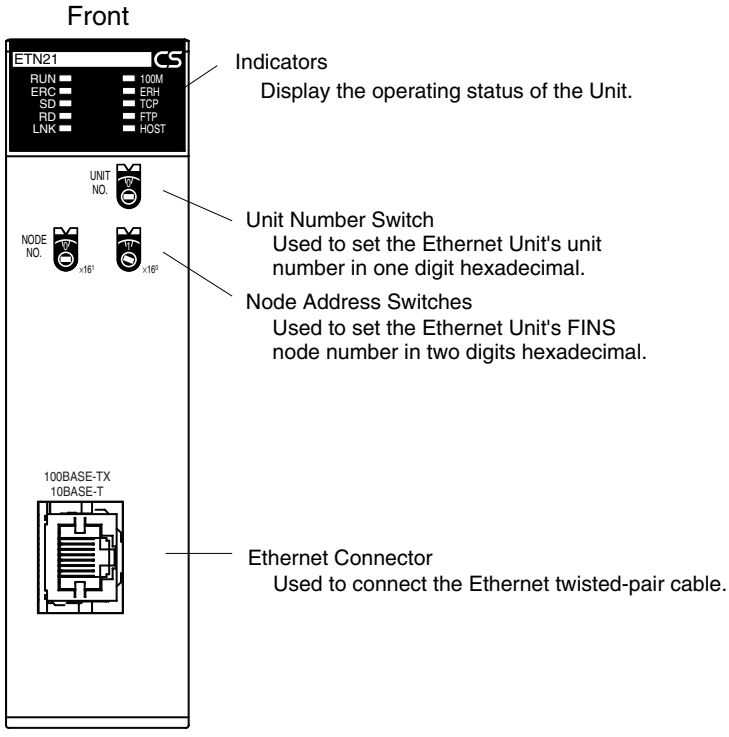

Each communications device connected to the Ethernet network is allocated a unique Ethernet address. For the Ethernet Unit, this Ethernet address is shown on the right side of the Unit as a 12-digit hexadecimal number.

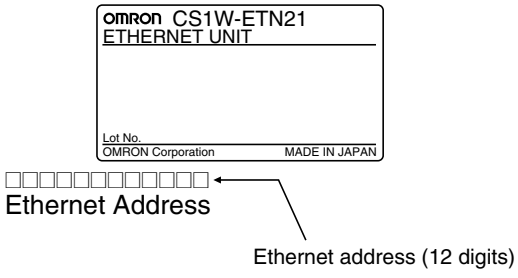

Note The Ethernet address can also be checked using the FINS command, CONTROLLER DATA READ. For details, refer to *7-3-2 CONTROLLER DATA READ* on page 162.

CJ-series Ethernet Units

CJ1W-ETN21 (100Base-TX)

Front

• Unit Version 1.5 or Later • Unit Version 1.4 or Earlier

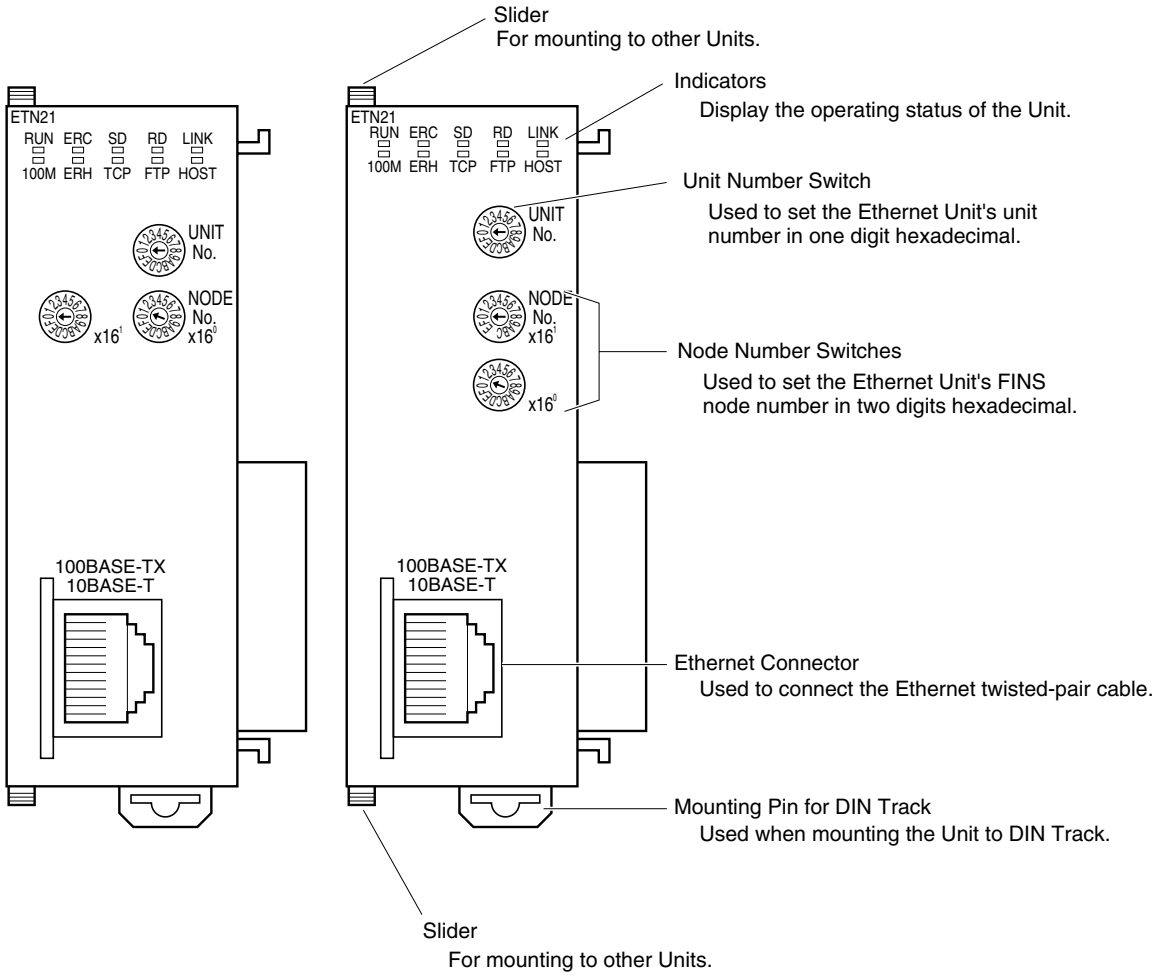

Note An IP address label is provided with the Unit. Writing the IP address and the subnet mask on this label and then attaching it to the front of the Unit allows the IP address and subnet mask to be easily confirmed.

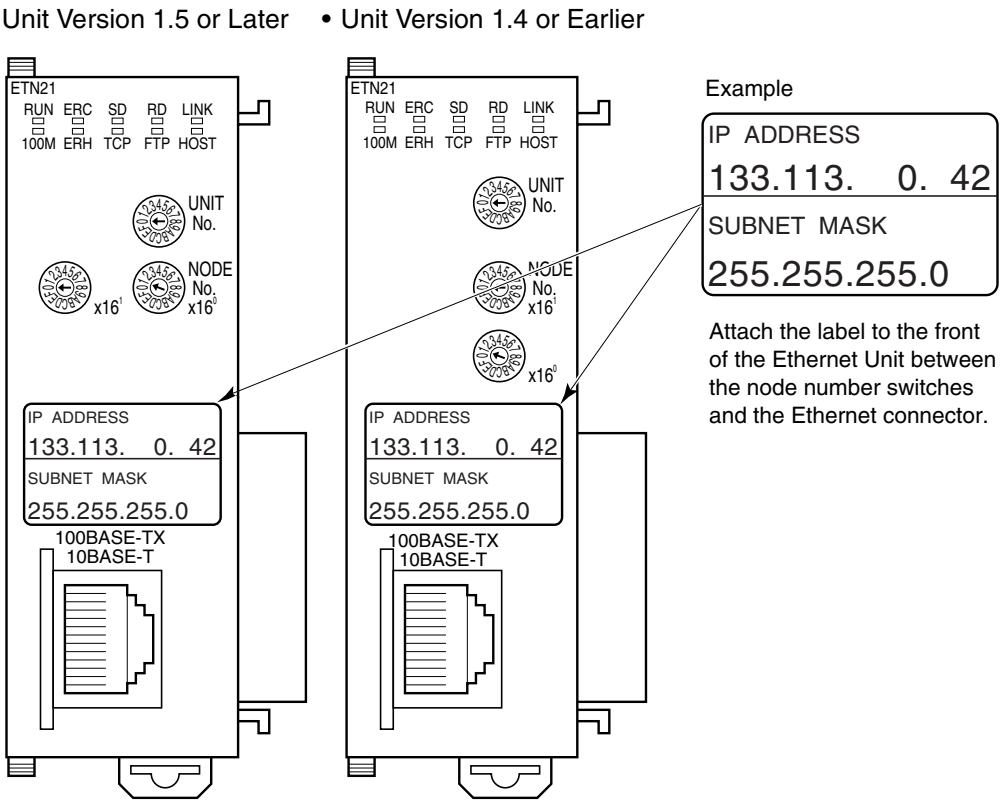

Each communications device connected to the Ethernet network is allocated a unique Ethernet address. For the Ethernet Unit, this Ethernet address is shown on the right side of the Unit as a 12-digit hexadecimal number.

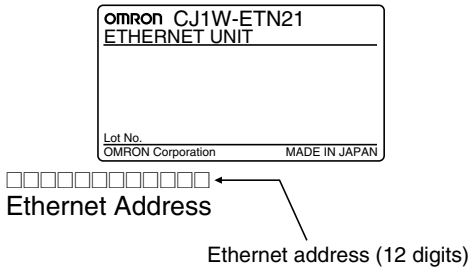

Note The Ethernet address can also be checked using the FINS command, CONTROLLER DATA READ. For details, refer to *7-3-2 CONTROLLER DATA READ* on page 162.

1-6-2 Indicators

The status of the indicators show the operating status of the Ethernet Unit, as shown below.

CS1W-ETN21
(100Base-TX)

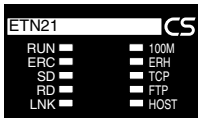

CJ1W-ETN21
(100Base-TX)

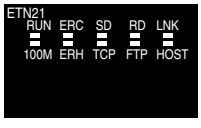

Indicator	Color	Status	Meaning
RUN	Green	Not lit	Operation stopped Hardware error
		Lit	Normal operation
100M (Transfer speed)	Green	Not lit	10 Mbps (10Base-T)
		Lit	100 Mbps (100Base-TX)
ERC (Ethernet Unit error)	Red	Not lit	Unit normal
		Lit	Node address not between 1 and 254 A hardware (e.g., internal memory) error has occurred.
ERH (CPU Unit error)	Red	Not lit	CPU Unit normal
		Lit	An error has occurred at the CPU Unit. There is an error in the I/O table, unit number, unit setup, or routing table settings.
		Flashing	An illegal IP address has been set. With automatic address generation, the rightmost two digits of the IP address do not match the node address.
SD (Send Data)	Yellow	Not lit	Not sending data (ready to send)
		Lit	Sending data
RD (Receive Data)	Yellow	Not lit	Not receiving data (ready to receive)
		Lit	Receiving data
LNK (Link status)	Yellow	Not lit	Link not established between hubs.
		Lit	Link established between hubs.
TCP (TCP socket in use)	Yellow	Not lit	None of the eight TCP sockets provided for socket services is in use.
		Lit	At least one of the eight TCP sockets provided for socket services is in use.
FTP (FTP Server Service)	Yellow	Not lit	FTP server on standby.
		Lit	FTP server operating (one user connected).
HOST (Server connection status)	Yellow	Not lit	Server (DNS, SMTP, POP3, or SNTP) not being used.
		Flashing	An error has occurred in the server connection.
		Lit	The server connection is normal.

1-7 Comparison with Previous Models

Item			Previous models	New models
Model number			CS1W-ETN11 CJ1W-ETN11	CS1W-ETN21 CJ1W-ETN21
Physical layer			10Base-T	100Base-TX, 10Base-T
Number of nodes			126	254
PLC maintenance via the Internet			Not possible to send FINS commands from a personal computer to the PLC via the Internet.	Can send commands (including FINS commands) by e-mail over the Internet from a personal computer to the PLC (using the mail receive function).
Server specification			Specification by IP address only	Specification by IP address or by host name (using the DNS client function)
Communications service	FINS communications service	Automatic IP address acquisition (DHCP client) by personal computer	Not possible for a computer automatically acquiring IP addresses to send commands to the PLC and receive responses.	A computer automatically acquiring IP addresses can send commands to the PLC and receive responses. (UDP/IP: By automatic generation (dynamic) IP address conversion method; TCP/IP: Automatic)
		FINS communications with personal computers without fixed node addresses	Not possible	Possible (with Automatic allocation by Ethernet Unit) (Client FINS automatic node address allocation function, TCP/IP only)
		Handling TCP/IP	With FINS communications, only UDP/IP possible.	With FINS communications, both UDP/IP and TCP/IP possible.
		Simultaneous connection of multiple applications in a personal computer	Not possible	Possible (with both UDP/IP and TCP/IP)
	Mail functions		Mail send function only	E-mail attachments with I/O memory data are now possible for the mail send function. (SMTP client function, file attachment function) With the mail receive function, commands can be received from the PLC. (POP3 client function, mail receive function)
	FTP server function		Same	
	Socket services function		---	The following features have been added to the TCP socket services function: • Use of keep-alive • Number of bytes of data received for TCP socket Nos. 1 to 8 • Status of TCP socket Nos. 1 to 8: Data Received Flag
	Automatic clock information adjustment		Not possible	CPU Unit built-in clock can be adjusted from SNTP server. (SNTP client function)

1-8 Unit Version Upgrade Information

The details of the upgrade to the Ethernet Unit version are as follows:

■ Unit Version 1.3

Upgrade	Details
Web function added	The unit settings and status monitoring for the Ethernet Unit can be easily performed from a Web browser.
Function prohibiting access using FINS/UDP from nodes with dynamically changed IP addresses	Access to change the remote IP address from a node using FINS/UDP can be prohibited (IP address protection).

■ Unit Version 1.4

Upgrade	Details
ETN11-compatible mode added to the ETN21 settings for FINS/UDP.	A mode compatible with the CS1W-ETN11/CJ1W-ETN11 was added in the operating specifications for FINS/UDP messages sent from a different UDP port number than the FINS/UDP port number set in the Ethernet Unit.

■ Unit Version 1.5

Upgrade	Details
Added CIDR function to subnet mask settings.	An option setting has been added to the subnet mask settings to enable CIDR. Enabling CIDR enables using the IP address with classless subnet mask settings.
Added option for high-speed socket services.	Enabling high-speed socket services improves the performance of sending and receiving for socket services using specific bits. If high-speed socket services are disabled, performance is the same as previously.
Added linger option to socket options for TCP open request.	It is possible to specify the linger option in the option settings for the TCP open request (both passive and active).
Changed position of node address setting switches (CJ1W-ETN21 only)	The position of the node address setting switches was changed. The setting method and setting range are the same as previously.

SECTION 2
Installation and Initial Setup

This section explains how to install the Ethernet Unit and make the initial settings required for operation.

2-1 Overview of Startup Procedure 30
2-2 Switch Settings 31
2-2-1 CS-series Ethernet Units 31
2-2-2 CJ-series Ethernet Units 32
2-3 Mounting to a PLC 33
2-3-1 Mounting to a CS-series PLC 33
2-3-2 Mounting to a CJ-series PLC 33
2-4 Network Installation 34
2-4-1 Basic Installation Precautions 34
2-4-2 Recommended Products 35
2-4-3 Precautions 35
2-4-4 Using Contact Outputs (Common to All Units) 37
2-5 Connecting to the Network 38
2-5-1 Ethernet Connectors 38
2-5-2 Connecting the Cable 38
2-6 Creating I/O Tables 39
2-6-1 I/O Table Overview 39
2-6-2 Connecting Programming Devices to the PLC 39
2-6-3 Procedure for Creating I/O Tables 40
2-7 Unit Setup Procedure 41
2-7-1 Using the CX-Programmer 41
2-7-2 Using the Web Browser Setting Function 43
2-8 Basic Settings 46
2-9 Unit Setup for Particular Applications 50
2-10 Communications Test 52
2-10-1 PING Command 52
2-10-2 Ethernet Unit 53
2-10-3 Host Computer 53
2-11 Converting from Previous Models 54

2-1 Overview of Startup Procedure

The following procedure is the same for the CS Series and CJ Series.

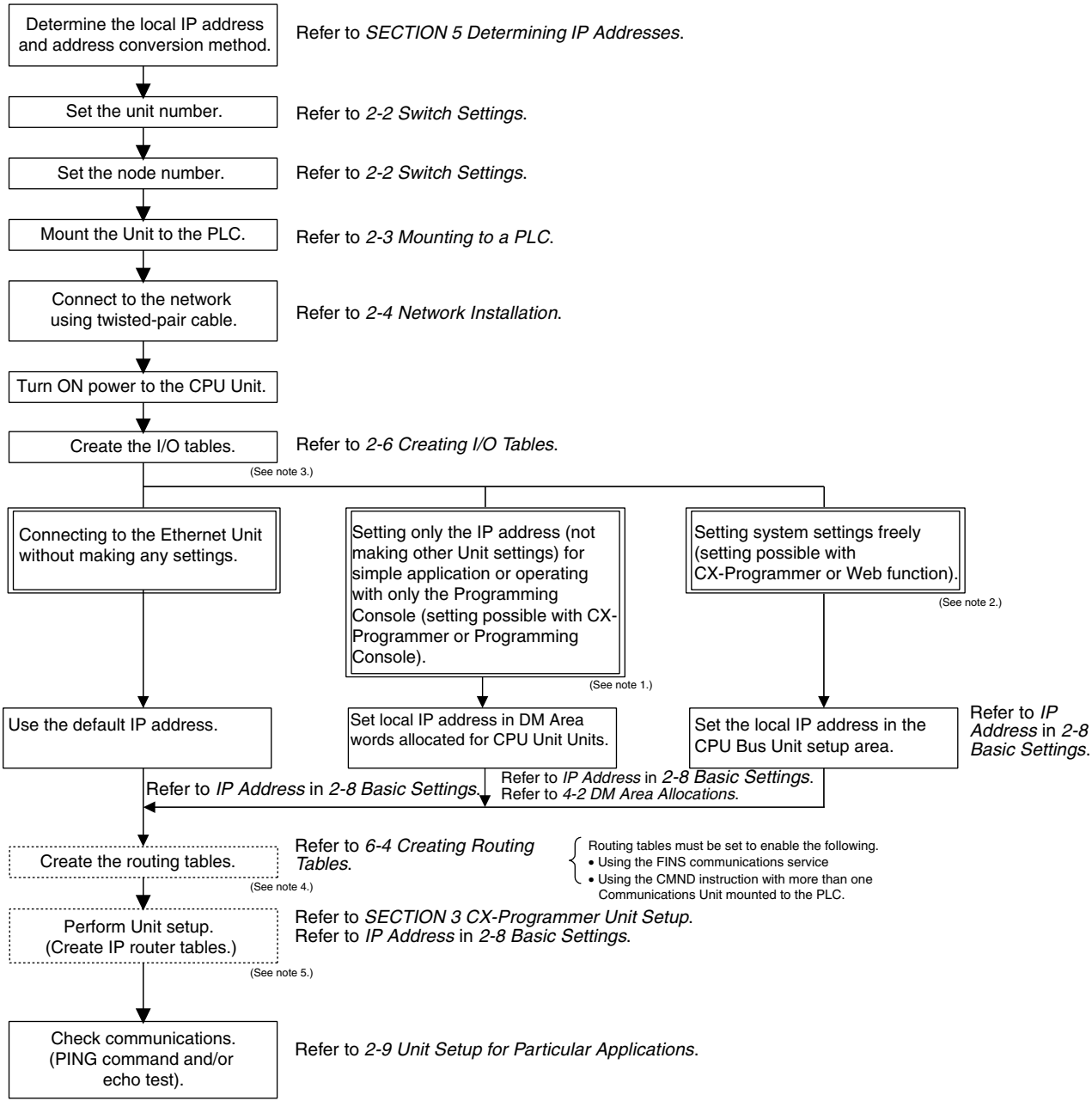

Note 1: Used mainly when a Programming Console is used to set only the local IP address (set in allocated DM words). When using this method, always leave the local IP address in the CPU Bus Unit Setup Area set to the default value of 0.0.0.0 If the CPU Bus Unit Setup Area contains any other value, any setting made in the allocated DM words will be overwritten with it.

2: The local IP address and other parameters can be set with the CX-Programmer.

3: A PLC Programming Device is required: CX-Programmer, CX-Integrator, Programming Console, etc.

4: The CX-Integrator is required.

5: The CX-Programmer is required.

2-2 Switch Settings

2-2-1 CS-series Ethernet Units

Setting the Unit Number

The unit number is used to identify individual CPU Bus Units when more than one CPU Bus Unit is mounted to the same PLC. Use a small screwdriver to make the setting, taking care not to damage the rotary switch. The unit number is factory-set to 0.

Setting range:
0 to F

Note

(1) Turn OFF the power supply before setting the unit number.

(2) If the unit number is being set for the first time or changed, then I/O tables must be created for the PLC.

(3) With CS-series and CJ-series PLCs, words are automatically allocated in the CIO Area and DM Area according to the unit numbers that are set. For details, refer to *SECTION 4 Ethernet Unit Memory Allocations*.

Setting the Node Address

With the FINS communications service, when there are multiple Ethernet Units connected to the Ethernet network, the Ethernet Units are identified by node addresses. Use the node address switches (NODE NO.) to set the node address between 01 and FE hexadecimal (1 to 254 decimal). Do not set a number that has already been set for another node on the same network.

Setting range:
01 to FE (1 to 254 decimal)

The left switch sets the sixteens digit (most significant digit) and the right switch sets the ones digit (least significant digit). The node address is factory-set to 01.

Note Turn OFF the power supply before setting the node address.

Relation to IP Addresses

When using the automatic generation method (either dynamic or passive) for address conversion, set the rightmost byte of the IP address set for the Ethernet Unit to the same value as the node address. If this is not possible, either the IP address table method or the combined method must be used for address conversion. (For details, refer to *5-2 IP Addresses in FINS Communications*.) If the FINS communications service is not used on the Ethernet network, then it is all right to overlap with other Ethernet Units. The setting, however, must be made within a range of 01 to FE. If a value outside of this range is set, the ERC indicator will light.

Unit Operating Mode Change Function

If the node address is set to 00, the Unit operating mode change function will start.

This function changes the format for the Unit Setup (in the CPU Bus Unit System Setup Area) when converting to a CS1W-ETN21 or CJ1W-ETN21 Ethernet Unit from one of the previous models (CS1W-ETN01/11 or CJ1W-ET11). For details, refer to *2-11 Converting from Previous Models*.

2-2-2 CJ-series Ethernet Units

Setting the Unit Number

The unit number is used to identify individual CPU Bus Units when more than one CPU Bus Unit is mounted to the same PLC. Use a small screwdriver to make the setting, taking care not to damage the rotary switch. The unit number is factory-set to 0.

Setting range:
0 to F

Note

(1) Turn OFF the power supply before setting the unit number.

(2) If the unit number is being set for the first time or changed, then I/O tables must be created for the PLC.

(3) With CS-series and CJ-series PLCs, dedicated areas are automatically allocated in the CIO Area and DM Area according to the unit numbers that are set. For details, refer to *SECTION 4 Ethernet Unit Memory Allocations*.

Setting the Node Address

With the FINS communications service, when there are multiple Ethernet Units connected to the Ethernet network, the Ethernet Units are identified by node addresses. Use the node address switches to set the node address between 01 and FE hexadecimal (1 to 254 decimal). Do not set a number that has already been set for another node on the same network.

- Unit Version 1.5 or Later

- Unit Version 1.4 or Earlier

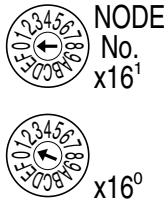

Setting range
01 to FE (1 to 254 decimal)

The left switch sets the sixteens digit (most significant digit) and the right switch sets the ones digit (least significant digit). The node address is factory-set to 01.

Note Turn OFF the power supply before setting the node address.

Relation to IP Addresses

When using the automatic generation method (either dynamic or passive) for address conversion, set the rightmost byte of the IP address set for the Ethernet Unit to the same value as the node address. If this is not possible, either the IP address table method or the combined method must be used for address conversion. (For details, refer to *5-2 IP Addresses in FINS Communications*.) If the FINS communications service is not used on the Ethernet network, then it is all right to overlap with other Ethernet Units. The setting, however, must be made within a range of 01 to FE. If a value outside of this range is set, the ERC indicator will light.

Unit Operating Mode Change Function

If the node address is set to 00, the Unit operating mode change function will start.

This function changes the format for the Unit Setup (in the CPU Bus Unit System Setup Area) when converting to a CS1W-ETN21 or CJ1W-ETN21 Ethernet Unit from one of the previous models (CS1W-ETN01/11 or CJ1W-ET11). For details, refer to *2-11 Converting from Previous Models*.

2-3 Mounting to a PLC

2-3-1 Mounting to a CS-series PLC

Ethernet Units can be mounted to any slots in either a CS-series CPU Rack or a CS-series Expansion CPU Rack, but the number of slots to which they can be mounted depends on the Backplane. Up to four Ethernet Units can be mounted to a single PLC. If it is mounted in combination with other CPU Bus Units (e.g., Controller Link Units), the maximum total number of CPU Bus Units that can be mounted is 16.

Note Tighten PLC Backplane mounting screws to a torque of 0.9 N·m, and the Unit's screws to a torque of 0.4 N·m.

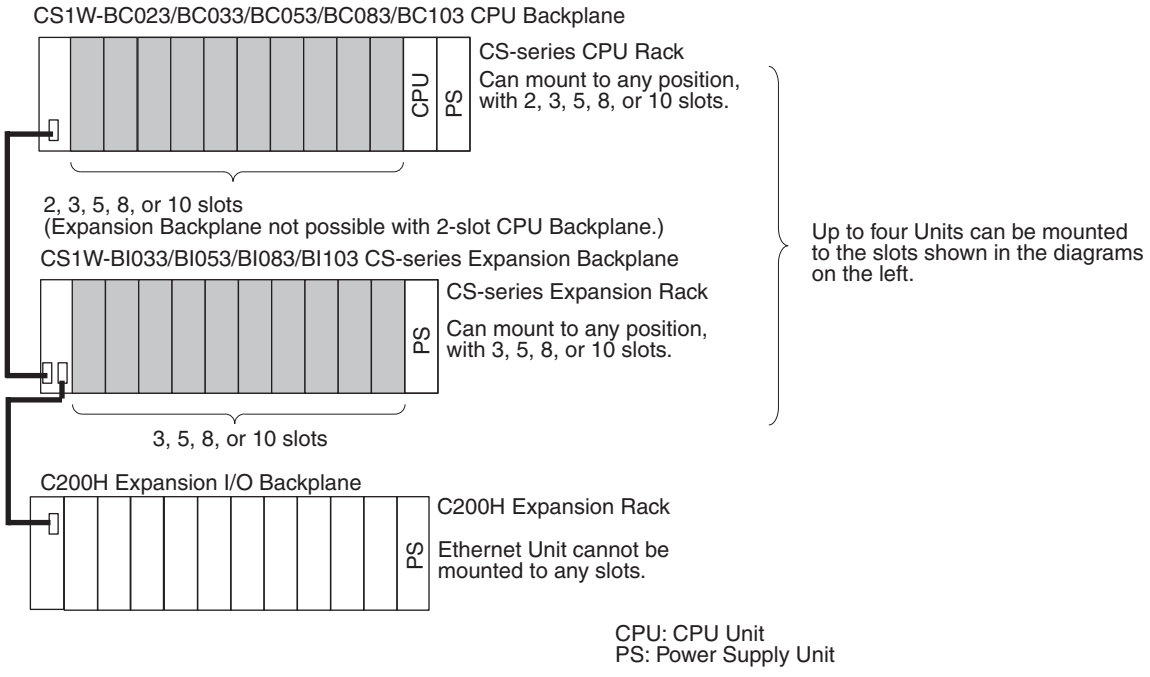

Note The CS1W-ETN21 Ethernet Unit's maximum current consumption is 380 mA. Make sure that the total current consumption of all the Units connected to the same CPU Backplane or Expansion Backplane does not exceed the output capacity of the Power Supply Unit.

2-3-2 Mounting to a CJ-series PLC

Ethernet Units can be connected to either a CJ-series CPU Rack or a CJ-series Expansion CPU Rack. Connect the Ethernet Unit in any of the positions shown below using the sliders on the top and bottom of the Unit. Up to four Ethernet Units can be mounted to a single PLC. If it is mounted in combination with other CPU Bus Units (e.g., Controller Link Units), the maximum total number of CPU Bus Units that can be mounted is 16.

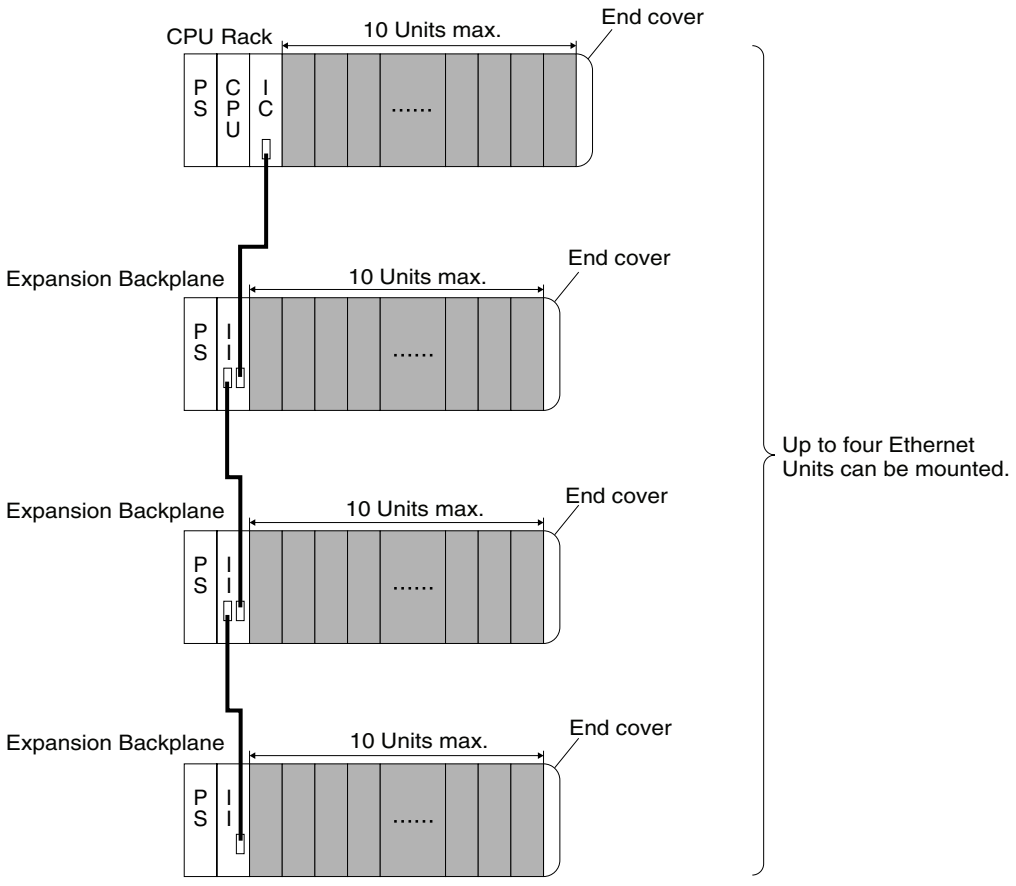

PS: Power Supply Unit
CPU: CPU Unit
IC: I/O Control Unit
II: I/O Interface Unit

The CJ1W-ETN21 Ethernet Unit's maximum current consumption is 370 mA. Make sure that the total current consumption of all the Units connected to the same CPU Backplane or Expansion Backplane does not exceed the output capacity of the Power Supply Unit.

2-4 Network Installation

2-4-1 Basic Installation Precautions

- Take the greatest care when installing the Ethernet System, being sure to follow ISO 8802-3 specifications. You must obtain a copy of these specifications and be sure you understand them before attempting to install an Ethernet System. Unless you are already experienced in installing communications systems, we strongly recommend that you employ a professional to install your system.
- Do not install Ethernet equipment near sources of noise. If noise-prone environments are unavoidable, be sure to take adequate measures against noise interference, such as installing network components in grounded metal cases, using optical links in the system, etc.

2-4-2 Recommended Products

The following products are recommended for use with the CS1W-ETN21 Ethernet Unit.

Part	Maker	Model number	Specifications	Inquires
Hub	100BASE-TX			
	PHOENIX CONTACT	SWITCH 5TX	10/100 Mbit/s 5-port hub	
	10BASE-T			
	Allied Telesis	MR820TLX	9-port hub with 10Base-5 backbone port	Allied Telesis (0120) 86-0442 (in Japan only)
Twisted-pair cable	100BASE-TX			
	Fujikura	F-LINK-E 0.5mm x 4P	STP (shielded twisted-pair) cable: Category 5, 5e **Note:** Impedance is limited to 100 Ω.	---
	Fujikura	CTP-LAN5 0.5mm x 4P	UTP (unshielded twisted-pair) cable: Category 5, 5e	
	10BASE-T			
	Fujikura	F-LINK-E 0.5mm x 4P	STP (shielded twisted-pair) cable: Category 3, 4, 5, 5e **Note:** Impedance is limited to 100 Ω.	
	Fujikura	CTP-LAN5 0.5mm x 4P	UTP (unshielded twisted-pair) cable: Category 3, 4, 5, 5e	
Connectors (Modular plug)	STP Plug			
	Panduit Corp	MPS588	---	
	UTP Plug			
	Panduit Corp	MP588-C	---	

2-4-3 Precautions

Precautions on Laying Twisted-pair Cable

Basic Precautions

- Press the cable connector in firmly until it locks into place at both the hub and the Ethernet Unit.
- After laying the twisted-pair cable, check the connection with a 10Base-T cable tester.

Environment Precautions

- The UTP cable is not shielded, and the hub is designed for use in OA environments. In environments subject to noise, construct a system with shielded twisted-pair (STP) cable and hubs suitable for an FA environment.
- Do not lay the twisted-pair cable together with high-voltage lines.
- Do not lay the twisted-pair cable near devices that generate noise.

- Do not lay the twisted-pair cable in locations subject to high temperatures or high humidity.
- Do not lay the twisted-pair cable in locations subject to excessive dirt and dust or to oil mist or other contaminants.

Hub Installation Environment Precautions

- Do not install the hub near devices that generate noise.
- Do not install the hub in locations subject to high temperatures or high humidity.
- Do not install the hub in locations subject to excessive dirt and dust or to oil mist or other contaminants.

Hub Connection Methods

If more hub ports are required, they can be added by connecting more than one hub. There are two possible connection methods for hubs: Cascade and stacked.

Cascade Connections

- Connect two hubs to each other as follows: Connect an MDI port to an MDI-X port with a straight cable; connect two MDI ports with a cross cable; and connect two MDI-X ports with a cross cable.

Note It is very difficult to distinguish cross cables and straight cables by appearance. Incorrect cables will cause communications to fail. We recommend using cascade connections with straight cables whenever possible.

- With cascade connections, up to 5 segments can be connected using up to 4 repeaters (i.e., 4 hubs).

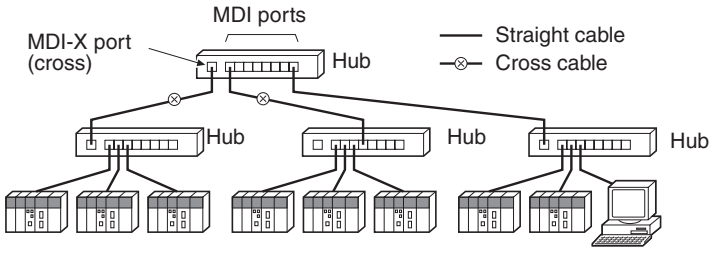

Stack Connections

- Connect the hubs using special cables or special racks.
- Normally there is no limit to the number of hubs in a stack, and each stack is treated as one hub. Some hubs, however, are limited in the number of hubs per stack.

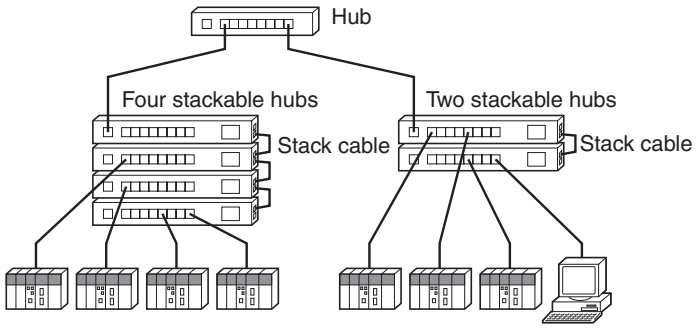

2-4-4 Using Contact Outputs (Common to All Units)

Communications errors can occur when Contact Output Units are mounted to the same Rack or connected to the same PLC as an Ethernet Unit due to noise generated by the contact outputs. Use one or more of the following measures when installing Contact Output Units and Ethernet Units on the same Rack.

Mounting Location

Mount (or connect) any Contact Output Units as far away from the Ethernet Unit as possible.

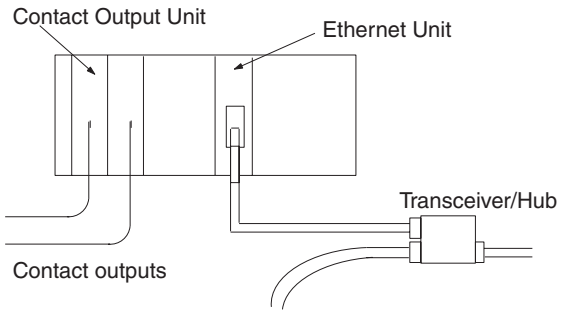

Cable Location

Separate the transceiver cable or twisted-pair cable connecting the Ethernet Unit as far from the wiring to the Contact Output Units as possible. The coaxial cable must also be placed as far away from the Contact Output Units and their wiring as possible.

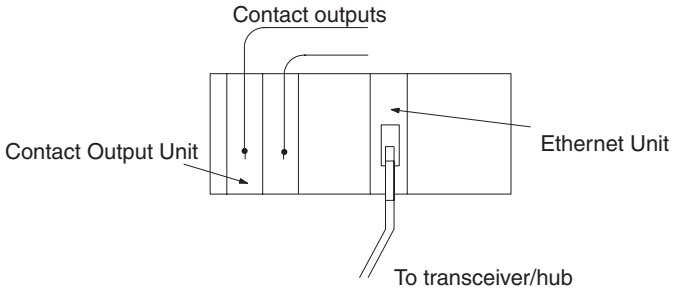

2-5 Connecting to the Network

2-5-1 Ethernet Connectors

The following standards and specifications apply to the connectors for the Ethernet twisted-pair cable.

- Electrical specifications: Conforming to IEEE802.3 standards.
- Connector structure: RJ45 8-pin Modular Connector (conforming to ISO 8877)

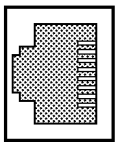

Connector pin	Signal name	Abbr.	Signal direction
1	Transmission data +	TD+	Output
2	Transmission data –	TD–	Output
3	Reception data +	RD+	Input
4	Not used.	---	---
5	Not used.	---	---
6	Reception data –	RD–	Input
7	Not used.	---	---
8	Not used.	---	---
Hood	Frame ground	FG	---

2-5-2 Connecting the Cable

⚠ **Caution** Turn OFF the PLC's power supply before connecting or disconnecting twisted-pair cable.

⚠ **Caution** Allow enough space for the bending radius of the twisted-pair cable as shown in below.

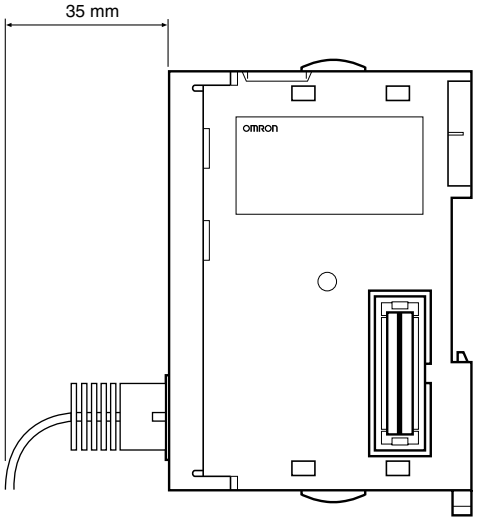

1,2,3...

1. Lay the twisted-pair cable.
2. Connect the cable to the hub. Be sure to press in the cable until it locks into place.

   Request cable installation from a qualified professional.

3. Connect the cable to the connector on the Ethernet Unit. Be sure to press in the cable until it locks into place.

Example: CS1W-ETN21

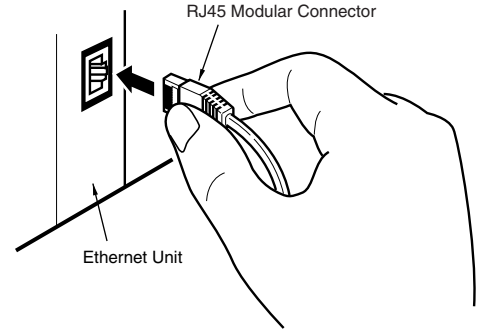

2-6 Creating I/O Tables

2-6-1 I/O Table Overview

I/O tables are used to identify Units mounted to the PLC, and to allocate I/O to them. With CS-series and CJ-series PLCs, whenever there is a change to the Unit configuration it is necessary to create I/O tables and register the Units to the CPU Unit.

The I/O tables can be created in the following ways.

- Using the CX-Programmer offline.
- Using the CX-Programmer online, with the Units mounted to the PLC.
- Using the Programming Console, with the Units mounted to the PLC.
- Using the CPU Unit's automatic I/O allocation at startup. (This method is available for the CJ Series only.)
  From here on, operations involving the Programming Console are described.

2-6-2 Connecting Programming Devices to the PLC

To create the I/O tables, connect a Programming Device (such as a CX-Programmer or Programming Console) to the PLC.

Applicable Programming Devices

The following Programming Devices can be used with CS/CJ-series PLCs.

Programming Console

Model number	Key Sheet (required)	Recommended cable (required)
C200H-PRO27-E	CS1W-KS001-E	CS1W-CN224 (cable length: 2.0 m) CS1W-CN624 (cable length: 6.0 m)
CQM1-PRO01-E		CS1W-CN114 (cable length: 0.1 m)

CX-Programmer (Version 3.20 or Higher) and CX-Integrator

The operations are explained here using a Programming Console. For details regarding the CX-Programmer and the CX-Integrator, refer to the *CX-Programmer User's Manual*. Refer to the *CX-Integrator Operation Manual* (W445) for connection procedures and operating procedures for the CX-Integrator.

CX-Integrator is software that comes with CX-One and is automatically installed when CX-One is installed.

Connecting Programming Devices

To connect a Programming Console, attach a CS/CJ-series Key Sheet and then connect the Console to the CPU Unit's peripheral port. (It cannot be connected to the RS-232C port.)

2-6-3 Procedure for Creating I/O Tables

The procedure for creating I/O tables is shown here, taking as an example I/O tables that is generated automatically for a PLC connected online. In this example, a Programming Console is used for creating the I/O tables. For an explanation of how to create I/O tables using a CX-Programmer, refer to the *CX-Programmer User's Manual*.

Use the following procedure to create the I/O tables.

Note With the CJ Series, it is necessary to create I/O tables only when I/O allocation is performed by the user. With the CS Series, it is always necessary to create I/O tables.

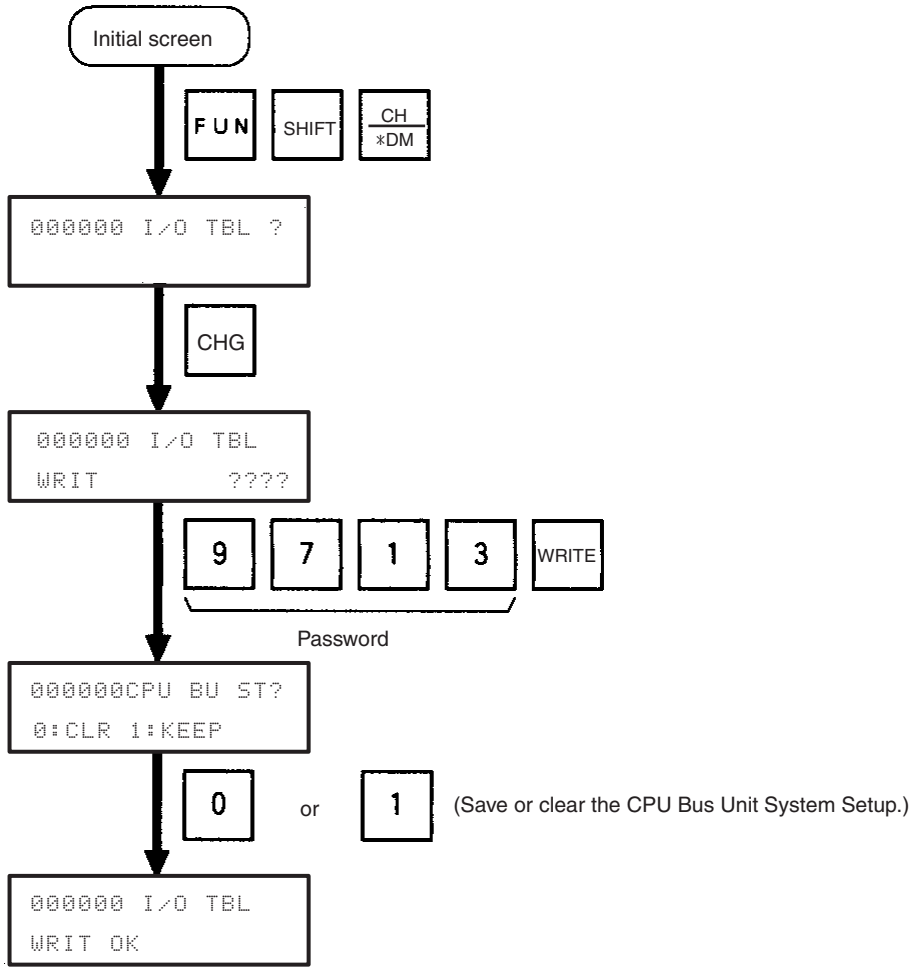

2-7 Unit Setup Procedure

2-7-1 Using the CX-Programmer

Use the CX-Programmer (Ver. 3.20 or higher) for the Ethernet Unit Setup, and follow the procedure described below. Some functions added with unit version 1.3 require CX-Programmer version 5.0 or higher for setting.

1,2,3...

1. Connect the CX-Programmer online.

   The CX-Programmer can be connected to the PLC in either of the following ways:

   a. Connect the personal computer to the PLC by serial cable, through either a peripheral port or RS-232C port.

   b. Connect the personal computer to the PLC by Ethernet.

   When Ethernet Unit is registered in the I/O tables in the CPU Unit, the Ethernet Unit will operate using the default IP address (192.168.250.*node_number*). This default IP address can be used initially to connect online.

   For details on connecting the CX-Programmer to the PLC by serial cable, refer to the CX-Programmer operation manual.

   For details on connecting the CX-Programmer to the PLC by Ethernet, refer to *6-5 Using FINS Applications*.

2. Use the mouse to select *I/O table* in the Project Window. Either double-click or right-click to display the Properties Menu, and select *Open*. The I/O Table Window will then be displayed.

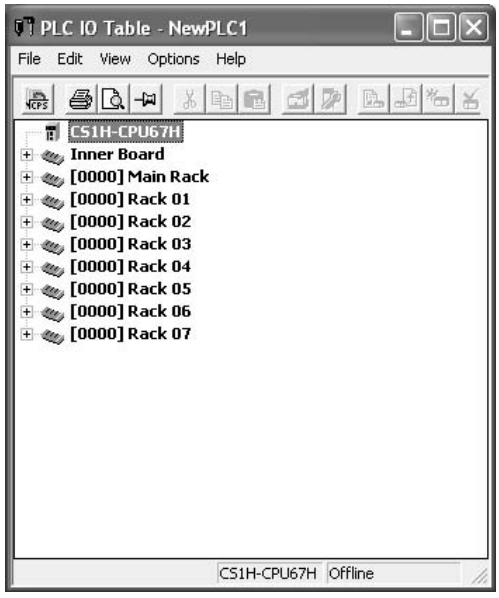

3. Read the I/O tables from the PLC and select the Rack to which the Ethernet Unit is mounted.

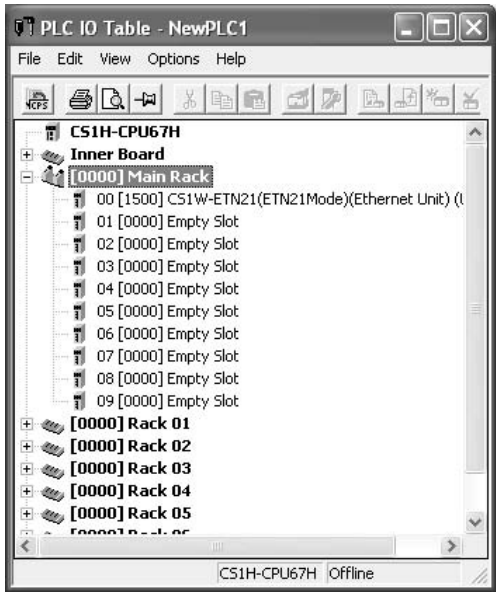

4. Move the cursor to the Ethernet Unit and right-click. Select *Unit Setup* from the popup menu to display the window for making the Ethernet Unit Setup. The default settings are shown below.

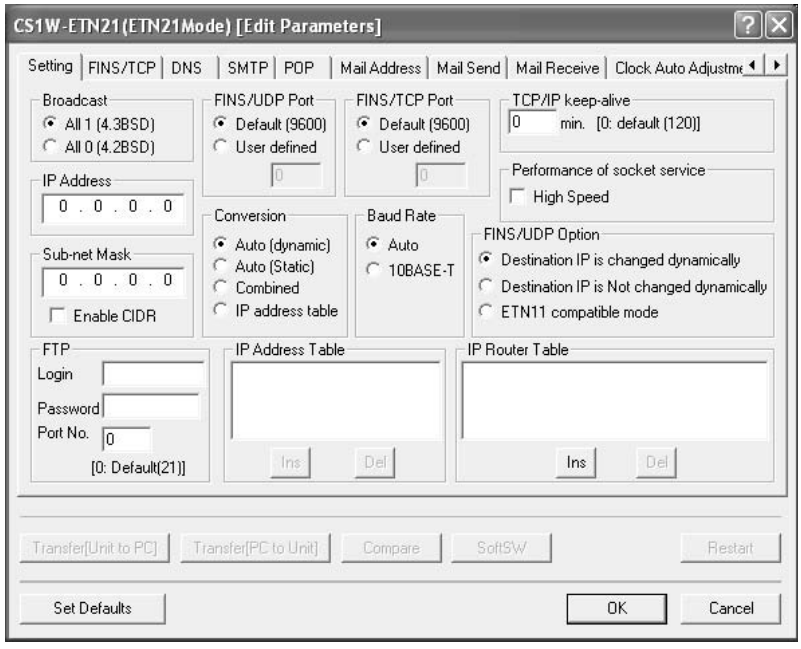

At the point where the Ethernet Unit is mounted and the I/O tables has just been created, the default values are in effect for all of the settings.

5. Make the required settings (i.e., the IP address in this case).

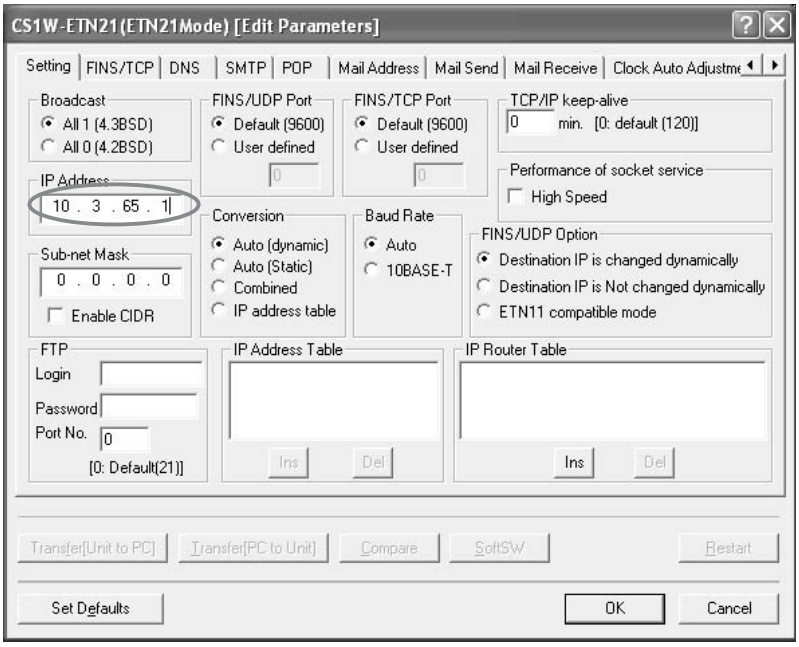

6. Transfer the settings to the PLC.

   Click on **Yes** in the following dialog box.

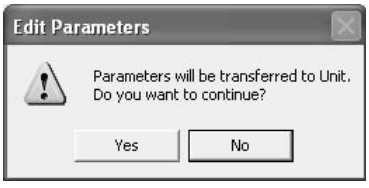

7. In order for the Ethernet Unit Setup to go into effect, the Unit must be restarted.

   Click on **Yes** in the following dialog box.

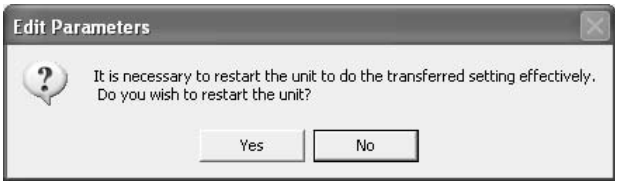

8. Check the Ethernet Unit's LED indicators.

   After the RUN indicator has turned OFF and then turned ON again, the Ethernet will recognize the new settings (i.e., the IP address in this case).

2-7-2 Using the Web Browser Setting Function

For Ethernet Units with Unit Ver. 1.3 or later, the Ethernet Unit's system settings can be set using the Web browser of a personal computer or other device. The Ethernet Unit's Web window is displayed by accessing the following URL from the Web browser.

URL: http://(Ethernet Unit's IP address)/0

Use the following procedure to set the Unit's system settings (IP address in this example) using Internet Explorer version 6.0 and the Ethernet Unit's Web function.

1,2,3... 1. Connect to the Ethernet Unit from the Web browser.
In this example, the URL is specified as http://192.168.250.1/0 using the Ethernet Unit's default IP address.

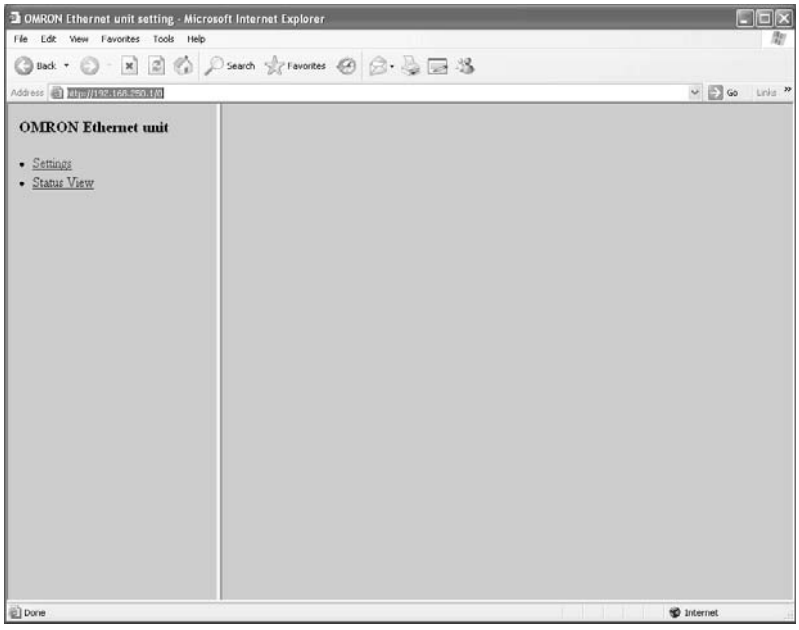

2. Select ***Settings*** from the menu on the left side of the window to display the *Settings Menu*.

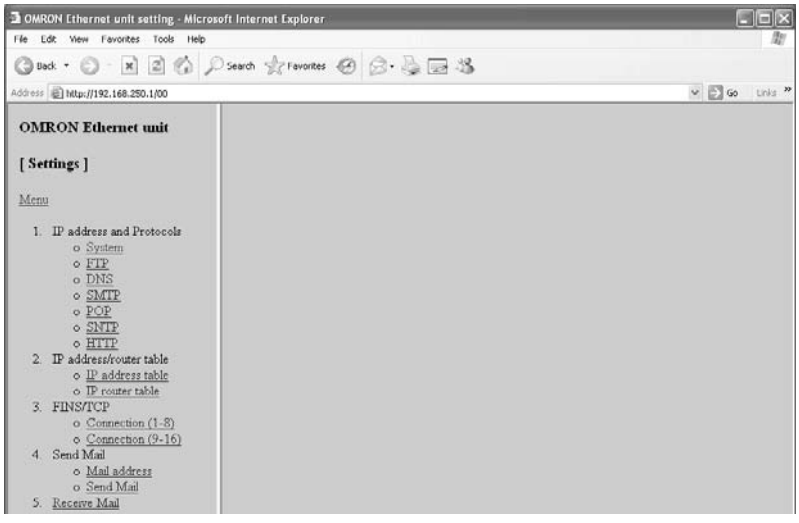

3. Select ***1. IP address and Protocols - System*** to display the *Login Password* field on the right of the window.

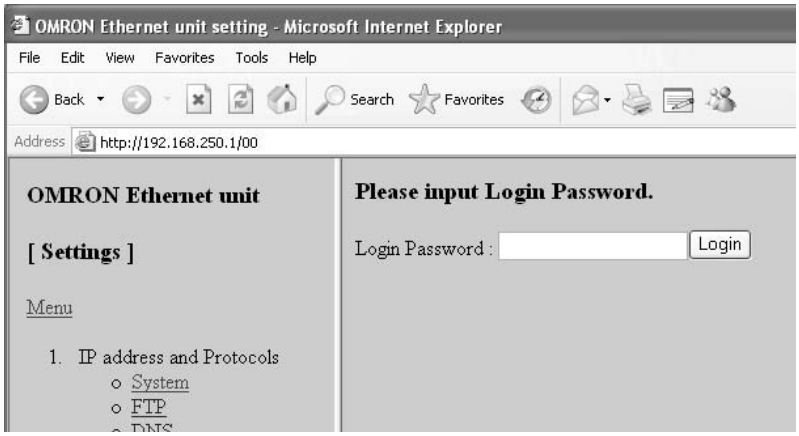

4. Input the default password (“ETHERNET” all in upper case) and click the **Login** Button.

5. The settings in the *System* menu will be displayed.
The following window shows the default system settings.

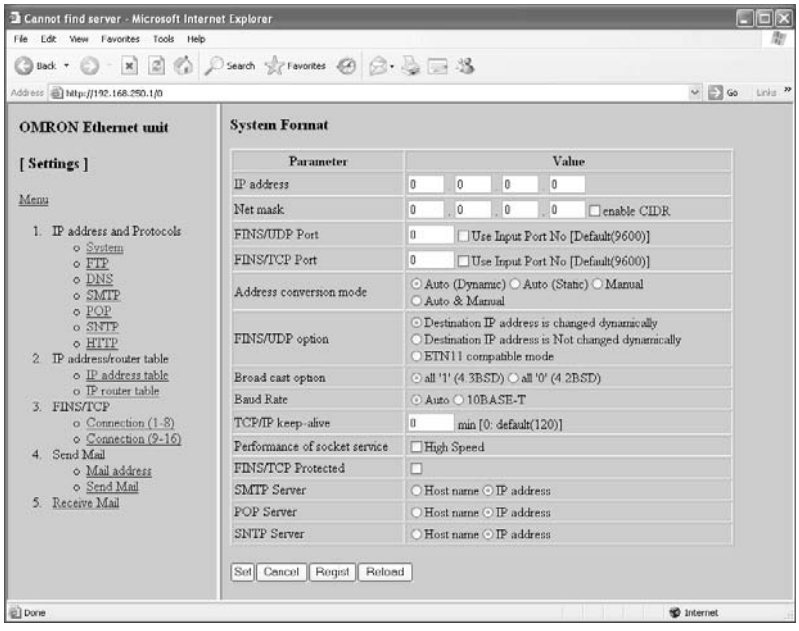

6. Make the required settings (i.e., the IP address in this example).

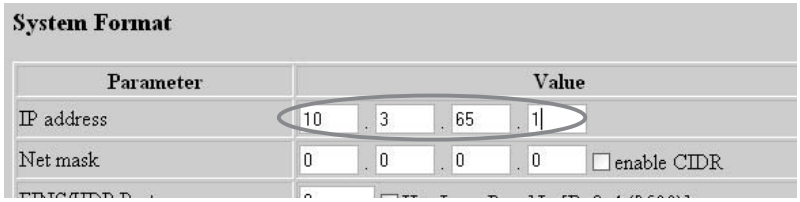

7. After entering the correct values, click the **Set** Button followed by the **Regist** Button to register them.

The Set Button is used to transfer the entered values from the personal computer, and temporarily register them in the Ethernet Unit.

The Regist Button stores the set values that have been temporarily registered in the Ethernet to the flash memory (non-volatile memory) of the CPU Unit. The Ethernet Unit reads the unit settings from flash memory (non-volatile memory) when the power is turned ON or the Unit is restarted. Therefore, when making the unit settings using the Web function, always click the Set Button before the Regist Button. Otherwise the entered set values will not be used. The Set Button and Regist Button are provided on the window for each setting item.

The functions of the other buttons are as follows:

- Cancel Button
  Use this button to cancel the entered value and display the value that was previously set with the Set Button again. If the Set Button has not been clicked, the value that was read from the CPU Unit's flash memory (non-volatile memory) when the Ethernet Unit was started will be displayed.
- Reload Button
  Use this button read and display the values saved in the CPU Unit's flash memory (non-volatile memory).

8. To enable the unit settings that have been registered in the CPU Unit's flash memory (non-volatile memory, turn the power to the PLC OFF and ON again, or restart the Ethernet Unit.

2-8 Basic Settings

The following items comprise the basic settings in the Ethernet Unit (100Base-TX) setup. Each item is described in detail below.

- IP address
- Subnet mask
- Broadcast settings
- Baud rate
- TCP/IP keep-alive
- IP router table

■ IP Address

For the IP address, set the Ethernet Unit's local IP address.

Depending on the value that is set, the IP address has a great influence on the connectability of the Ethernet Unit. To make full use of the Ethernet functions, it is necessary to study the applications and network system design when determining IP address allocations. Before setting the IP address, refer to *SECTION 5 Determining IP Addresses*.

There are several ways to set IP addresses.

Default Setting

The Ethernet Unit operates using the default IP address when the Unit is mounted to the PLC and initially registered in the I/O tables (i.e., when the Unit settings have not been made and the IP Address Display/Setting in the CPU Bus Unit Words Allocated in the DM Area is still all zeros).

The default IP address is determined as follows:

Default IP address = 192.168.250.FINS node address

The FINS node address is set by the rotary switch on the front of the Ethernet Unit. If the defaults are used for the IP address and the Unit settings, the settings will be as shown below.

Item	Operation status
IP address	192.168.250.FINS node address
Subnet mask	255.255.255.0 (Class C mask)
Broadcast settings	4.3BSD
Baud rate	Auto
TCP/IP keep-alive	120 min.
IP router table	None (IP router not enabled)

Setting the IP Address in the CPU Bus Unit Words Allocated in the DM Area

This method sets the IP address in the IP Address Display/Setting Area in the CPU Bus Unit Words Allocated in the DM Area, when the IP address is not set in the Unit Setup. When the IP address is set in the Unit Setup, the IP Address Display/Setting Area becomes the area for displaying the settings.

To make settings in the IP Address Display/Setting Area, use the CX-Programmer or Programming Console to write the values. In order for the new settings to go into effect, either the Ethernet Unit must be restarted or the power must be turned ON again to the PLC.

	15	14	13	12	11	10	09	08	07	06	05	04	03	02	01	00
m+98	(1)				(2)				(3)				(4)			
m+99	(5)				(6)				(7)				(8)			

IP address: (1)(2).(3)(4).(5)(6).(7)(8) (hexadecimal)

If only the IP address is set, according to the IP Address Display/Setting Area, and the defaults are used for all other Unit settings, the settings will be as shown below.

Item	Status
IP address	Words allocated for CPU Bus Unit (m+98 to m+99)
Subnet mask	Uses value corresponding to IP address class.
Broadcast settings	4.3BSD specifications
Baud rate	Auto
TCP/IP keep-alive	120 minutes
IP router table	Not set. (IP routing not supported.)

Unit Setup

This method sets the IP address by first selecting the Ethernet Unit from the CX-Programmer's I/O Table Window while connected online, and then setting the IP address from the Unit Setup.

Example: Using the CX-Programmer to Set the IP Address to 10.3.65.1

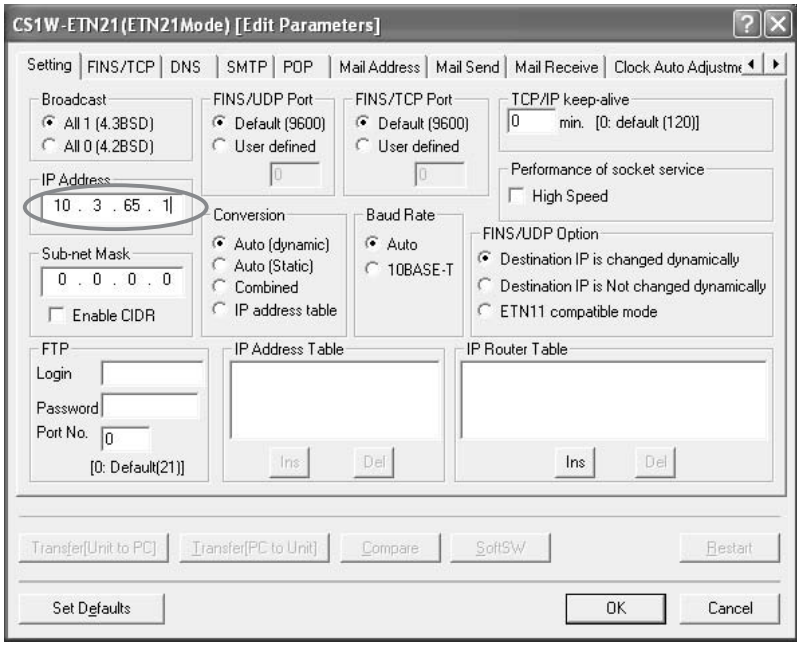

When an IP address is set in the Unit Setup, that value is displayed in the IP Address Display/Setting Area in the DM Area words allocated for CPU Bus Units.

When the IP address is set by the CX-Programmer, and the defaults are used for all other Unit settings, the settings will be as shown below.

Item	Status
IP address	Set by CX-Programmer.
Subnet mask	Uses value corresponding to IP address class when not using CIDR.
Broadcast settings	4.3BSD specifications
Baud rate	Auto
TCP/IP keep-alive	120 minutes
IP router table	Not set. (IP routing not supported.)

■ Subnet Mask

For the subnet mask, all bits corresponding to the bits in the IP address used as either the net number or the subnet number are set to 1, and the bits corresponding to the host number are set to 0. These settings must be made when using an address conversion method other than the IP address table method.

Starting from unit version 1.5, it is possible to use classless inter-domain routing by enabling CIDR. Enabling CIDR enables setting 192.0.0.0 to 255.255.255.252 for the subnet mask regardless of the IP address class.

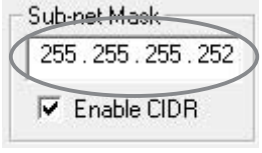

If CIDR is not enabled and a subnet mask is not set (i.e., the default of 0.0.0.0 is set) or an illegal value is set, one of the following values will be set as the network mask according to the class of the local IP address.

Class	Subnet mask
Class A	255.0.0.0
Class B	255.255.0.0
Class C	255.255.255.0

If classes are normally used, it is recommended to set a subnet mask values corresponding to the class.

■ Broadcast Settings

Set the method for specifying IP addresses when broadcasting.

Setting	Contents
All 1 (4.3BSD) (Default)	Broadcast with all ones for Host ID (4.3BSD specifications).
All 0 (4.2BSD)	Broadcast with Host ID all zeros (4.2BSD specifications).

■ Baud Rate

Set the baud rate.

Setting	Contents
Auto (Default)	Automatically detects the baud rate between hubs. Operates with 100Base-TX (full duplex) whenever possible.
10Base-T	Operates with 10Base-T (half duplex).

■ TCP/IP Keep-alive Setting

Set the Liveness-Checking Interval. (This setting is enabled only when FINS/TCP or TCP/IP socket services are used.)

When the keep-alive function is used with FINS/TCP or TCP/IP socket services, the keep-alive communications frame is used to check the status of the connection with the remote node (either a server or client) if there are no communications during the time interval set here. Up to nine checks are executed at 75-second intervals. and if there is no response to any of them then the connection is terminated.

The default setting (0) is for a specified value of 120 minutes for the Liveness-Checking Interval. When the prescribed value is used as is, it may not be suitable for control system applications. Set the checking time as required for the system. The setting range is 0 to 65,535 minutes.

■ IP Router Table

An IP router table is a table of correspondences for finding IP addresses for the IP routers that relay target segments when the Unit communicates via IP routers with nodes on other IP network segments.

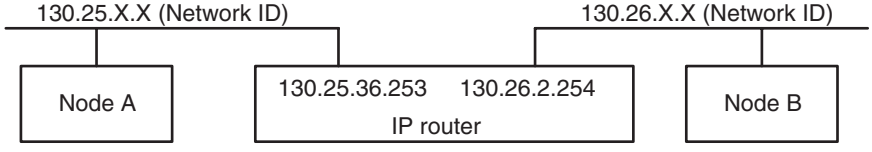

For the IP network address, set the network number (i.e., the net ID) of the other IP network segment with which communications are to be executed. The length of the network number (i.e., the number of bytes) will vary depending on the IP address class. Four bytes are reserved for setting the IP network address, so set the network number from the beginning and then set 00 in the remaining space.

A maximum of eight settings can be registered. The default is for nothing to be set.

Settings

In this example setting for Node A (refer to the diagram above), a node with an IP address of 130.26.1.1 is connected to an IP router with an IP address of 130.25.36.253.

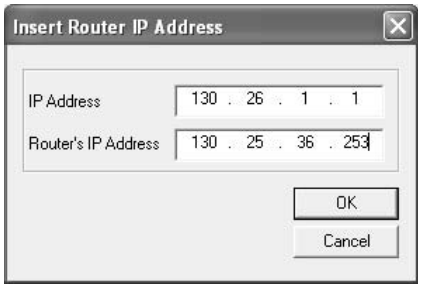

Only one default IP router can be set.

The default IP router is selected when no Network ID exists in the IP router table for the destination network number. To set the default IP router, set 0.0.0.0 for the IP address and set the default IP router's IP address for the router address.

2-9 Unit Setup for Particular Applications

Aside from the basic settings, the required settings vary depending on the particular communications applications that are used.

For details on settings, refer to *SECTION 3 CX-Programmer Unit Setup*.

FINS/UDP

CX-Programmer tab	Settings
Setup	Conversion
	FINS/UDP Port No.
	IP Address Table
	Destination IP Address Change Dynamically

For details, refer to *SECTION 6 FINS Communications Service* in the *Operation Manual Construction of Networks*.

Use CX-Integrator to make routing table settings as required.

FINS/TCP

CX-Programmer tab	Settings
Setup	FINS/TCP Port No.
FINS/TCP	FINS/TCP Connection Setup

For details, refer to *SECTION 6 FINS Communications Service* in the *Operation Manual Construction of Networks*.

Use CX-Integrator to make routing table settings as required.

Socket Services

CX-Programmer tab	Setting
Setup	Keep-alive

FTP

CX-Programmer tab	Settings
Setup	Login
	Password
	Port No

For details, refer to *SECTION 4 FTP Server Function* in the *Operation Manual Construction of Applications*.

Mail

CX-Programmer tab	Settings
DNS	IP Address
	Port No.
	Retry timer
SMTP	Server specification type
	IP Address
	Host name
	Port No.
	Local mail address
	Use POP before SMTP
Mail Address	Mail address 1
	Mail address 2
Send Mail	Transmission trigger setting
	Trigger classification
	Interval time
	Mail address
	Transmission data classification

For details, refer to *SECTION 2 Mail Send Function* in the *Operation Manual Construction of Applications*.

Mail Reception

CX-Programmer tab	Settings
DNS	IP Address
	Port No.
	Retry timer
POP	Server specification type
	IP Address
	Host name
	Port No.
	Account Name
	Mail password
	Server access interval time

CX-Programmer tab	Settings
Receive Mail	Posting Mail Address Protection Setting
	Receive Attached File Setting
	Receive Command Setting

For details, refer to *SECTION 3 Mail Receive Function* in the *Operation Manual Construction of Applications*.

Automatic Clock Adjustment

CX-Programmer tab	Settings
DNS	IP Address
	Port No.
	Retry timer
Auto Adjust Time	SNTP Server Setup
	Auto Adjust Time
	Server specification type
	IP Address
	Host name
	Port No.
	Retry timer
	Adjust Time

For details, refer to *SECTION 5 Automatic Clock Adjustment Function* in the *Operation Manual Construction of Applications*.

Web Functions

CX-Programmer tab	Setting item
HTTP	Use Web function
	Password
	Port No.

For details, refer to *Appendix G Ethernet Unit Web Function*.

2-10 Communications Test

If the basic settings (in particular the IP address and subnet mask) have been made correctly for the Ethernet Unit, then it should be possible to communicate with nodes on the Ethernet.

This section describes how to use the PING command to perform communications testing between Ethernet Units.

2-10-1 PING Command

The PING command sends an echo request packet to a remote node and receives an echo response packet to confirm that the remote node is communicating correctly. The PING command uses the ICMP echo request and responses. The echo response packet is automatically returned by the ICMP.

The PING command is normally used to check the connections of remote nodes when configuring a network. The Ethernet Unit supports both the ICMP echo request and reply functions.

If the remote node returns a normal response to the PING command, then the nodes are physically connected correctly and Ethernet node settings are correct.

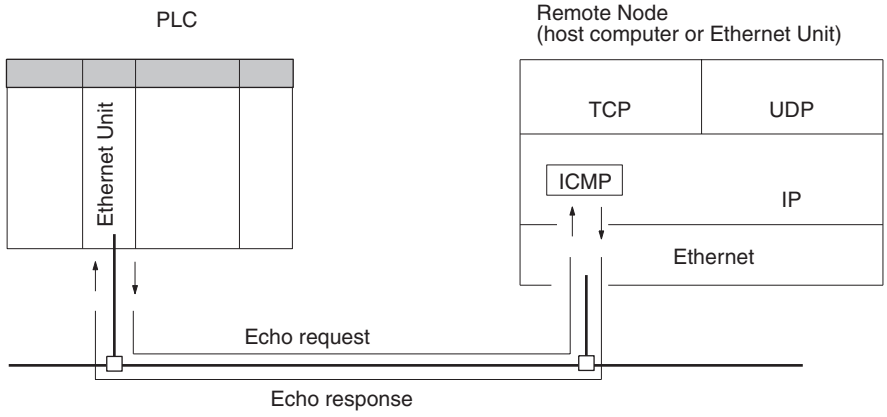

2-10-2 Ethernet Unit

The Ethernet Unit automatically returns the echo response packet in response to an echo request packet sent by another node (host computer or other Ethernet Unit). An echo request packet can be sent to another node by issuing the FINS command to execute the PING command from the PLC. Refer to page 184 for details on the PING command.

2-10-3 Host Computer

The PING command can be executed from the host computer to send an echo request packet to an Ethernet Unit. The method for using the PING command from a UNIX computer is given next.

Method

Input the following at the host computer prompt ($):

`$ ping` *IP_address(host_name)*

The destination is specified by its IP address or host name. If the host name is used, the host name must be defined in file /etc/hosts.

Note The PING command is not supported by some host computers.

Application Examples

These examples show sending the PING command to the node at IP address 130.25.36.8. The "$" in the example represents the host computer prompt. User inputs are underlined. Comments are placed after semicolons.

Normal Execution

```
$ ping 130.25.36.8                    ; Executes PING command
PING 130.25.36.8: 56 data bytes
64 bytes from 130.25.36.8: icmp_seq=0. time=0.ms
64 bytes from 130.25.36.8: icmp_seq=0. time=0.ms
       .            .            .
       .            .            .
       .            .            .
64 bytes from 130.25.36.8: icmp_seq=0. time=0.ms
←Enter Ctrl+C Key to cancel.
----130.25.36.8 PING Statistics----
9 packets transmitted, 9 packets received, 0% packets loss
round-trip (ms) min/avg/max = 0/1/16
$
```

Abnormal Execution

```
$ ping 130.25.36.8                    ; Executes PING command
PING 130.25.36.8: 56 data bytes
←Enter Ctrl+C Key to cancel.
----130.25.36.8 PING Statistics----
9 packets transmitted, 0 packets received, 100% packets loss
$
```

Refer to operating system documentation for your host computer for details about using the host computer's PING command.

2-11 Converting from Previous Models

The specifications for these Ethernet Units (CS1W-ETN21 and CJ1W-ETN21) are compatible with those for previous models (CS1W-ETN01/ETN11 and CJ1W-ETN11), so previous models being used with existing equipment can be easily replaced by the new models. Many of the specifications for the new Ethernet Units have been expanded, however, so there will be a number of limitations if the Unit is simply replaced.

In particular, the CPU Bus Unit System Setup Area is formatted for the previous models, so there is no way to make the settings for the expanded specifications.

To remove these limitations, it is necessary to change the CPU Bus Unit System Setup format from "ETN11 mode" to "ETN21 mode." Refer to *Changing the CPU Bus Unit System Setup Area Format* below for instructions on how to make the change.

If the format change is from ETN11 mode to ETN21 mode, then there will be no effect on previous applications. If the change is from ETN21 mode to ETN11 mode, however, then certain limitations will go into effect.

The following table shows the limitations that apply when operating in ETN11 mode.

Item	Specifications in ETN11 mode
Baud rate	• Automatic detection (100Base-TX or 10Base-T)
Subnet mask	• CIDR is not used. • Operation is performed with the default network mask if the subnet mask specification is less than the network mask for each class.
FINS node address setting range	• 1 to 254
IP address conversion: Automatic generation method	• Dynamic only
TCP keep-alive	• No time setting (Uses default setting)
FINS/TCP	• Server only for all connections (Uses default setting)
TCP socket services	• Socket option (keep-alive setting): Yes • Number of Bytes Received at TCP Socket Nos. 1 to 8: Yes • Data Received Flag: Yes • Socket high-speed option: No
FTP server function	• Port No. setting: No (Uses default setting)

Item	Specifications in ETN11 mode

Mail send function	• The specifications for previous Units apply.
	• The mail transmission status is as follows:
	  • Status of user mail transmission → Status of transmission condition setting 5
	  • Status of periodic mail transmission → Status of transmission condition setting 6
	  • Status of mail transmission when error occurs → Status of transmission condition setting 7

Mail receive function	• Cannot be used
Automatic clock adjustment function	• Cannot be used
DNS server host name	• Cannot be used

Note (1) These limitations do not apply when the CPU Bus Unit System Setup Area format is in ETN21 mode.

(2) When I/O tables are created using one of the new Ethernet Unit models, the CPU Bus Unit System Setup Area format is in ETN21 mode from the beginning.

Checking the CPU Bus Unit System Setup Area Format

Checking with the CX-Programmer's Software Switch Monitor - Status Tab Page

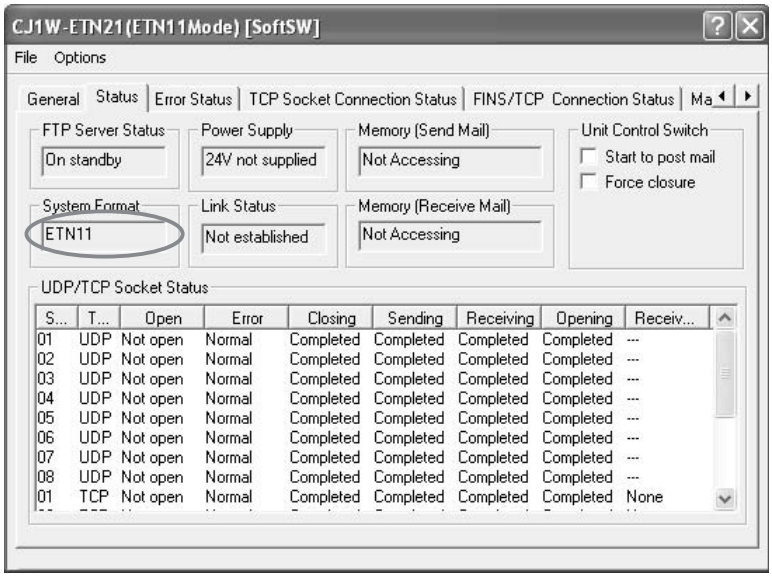

Checking with the CX-Programmer's Unit Setup Window

■ **Window Display in ETN21 Mode**

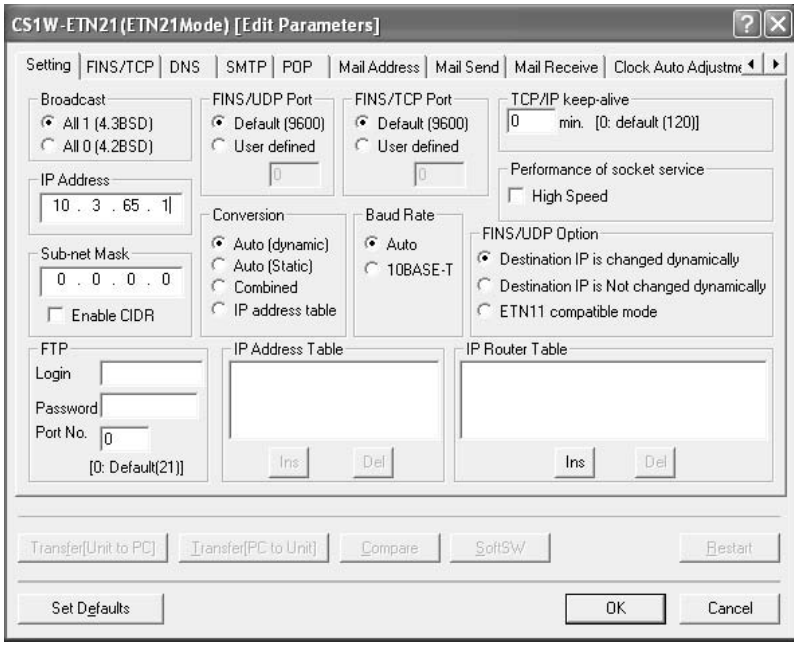

■ **Window Display in ETN11 Mode**

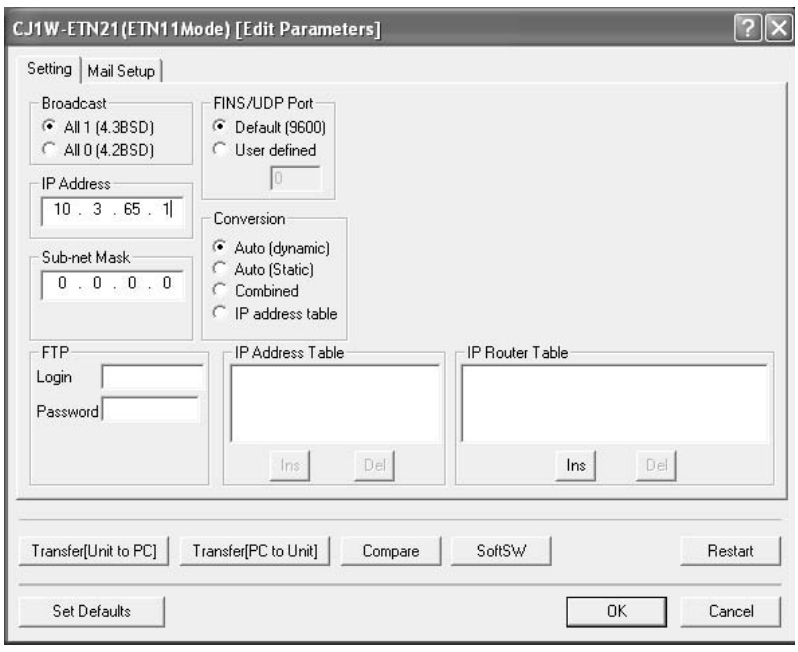

■ **Checking by Reading Words Allocated in the CIO Area**

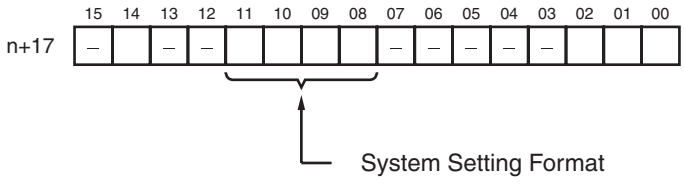

Bit address				Format classification
11	10	09	08	
0	0	0	0	ETN11 mode
0	0	0	1	ETN21 mode
Other				Reserved

Changing the CPU Bus Unit System Setup Area Format

The CPU Bus Unit System Setup Area format can be changed in either of the following two ways. Select the method that can be used in the system in which the Unit is to be replaced.

- By means of the CX-Programmer's Unit Setup
- By manipulating the rotary switches for the node address with a precision screwdriver

■ **Using the *Change ETN21 Mode* Command from the Options Menu in the I/O Table Window of the CX-Programmer**

1. Select ***Change ETN21 Mode*** from the Options Menu in the I/O Table Window.

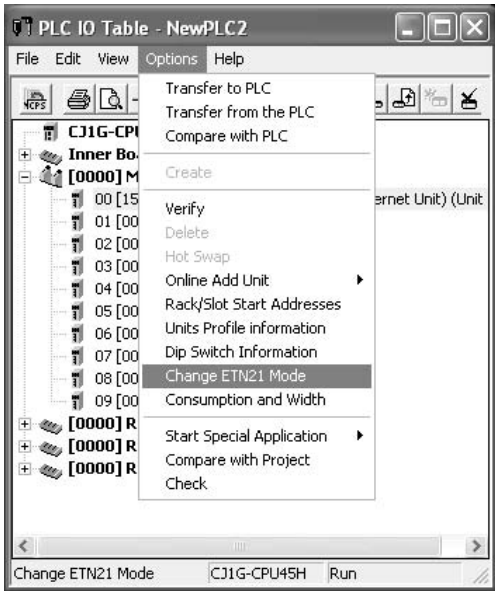

2. The following confirmation message will be displayed. To change the mode, click **Yes**.

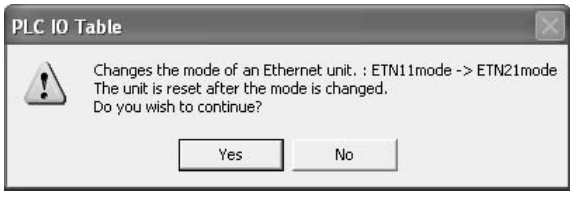

3. After the mode has been changed, the following confirmation message will be displayed. Click **OK** to restart the Ethernet Unit.

   After the Unit has been restarted, it will begin to operate in ETN21 mode.

■ Manipulating the Rotary Switches for the Node Address with a Precision Screwdriver

Converting from ETN11 Mode to ETN21 Mode

1. Turn OFF the power to the PLC, and set the Ethernet Unit's rotary switches for the node address as follows:

Node address		Indicators		
$\times 16^1$	$\times 6^0$	RUN	ERC	ERH
0	0	Not lit	Not lit	Not lit

2. Turn ON the power to the PLC. The Unit's indicators will change as follows:

Node address		Indicators		
$\times 16^1$	$\times 16^0$	RUN	ERC	ERH
0	0	Not lit	Lit	Not lit

3. Set the rotary switches for the node address to 01. There will be no change to the indicators.

Node address		Indicators		
$\times 6^1$	$\times 16^0$	RUN	ERC	ERH
0	1	Not lit	Lit	Not lit

4. Set the rotary switches for the node address to F1. The RUN indicator will begin to flash.

Node address		Indicators		
$\times 16^1$	$\times 16^0$	RUN	ERC	ERH
F	1	Flashing	Lit	Not lit

5. Set the rotary switches for the node address to 01. The Unit mode change function will start, and the ERH indicator will flash for approximately five seconds.

Node address		Indicators		
$\times 16^1$	$\times 16^0$	RUN	ERC	ERH
0	1	Flashing	Lit	Flashing

6. After the mode has been changed, the indicators will appear as shown below, depending on whether the change was completed normally or if an error occurred.
   - If the Mode Change was Completed Normally

Node address		Indicators		
$\times 16^1$	$\times 16^0$	RUN	ERC	ERH
0	1	Flashing	Lit	Lit

- If an Error Occurred in the Mode Change

Node address		Indicators		
$\times 16^1$	$\times 16^0$	RUN	ERC	ERH
0	1	Flashing	Lit	Not lit

Note If an error occurs in the mode change, remove the Ethernet Unit, create the I/O tables, and correct the settings using the procedures described in this section.

7. Turn OFF the power to the PLC and return the Ethernet Unit's rotary switches for the node address to its original setting.
8. Turn ON the power to the PLC.

Node address		Indicators		
$\times 16^1$	$\times 16^0$	RUN	ERC	ERH
-	-	Lit	Not lit	Not lit

Converting from ETN21 Mode to ETN11 Mode

1. Turn OFF the power to the PLC, and set the Ethernet Unit's rotary switches for the node address as follows:

Node address		Indicators		
$\times 16^1$	$\times 16^0$	RUN	ERC	ERH
0	0	Not lit	Not lit	Not lit

2. Turn ON the power to the PLC. The Unit's indicators will change as follows:

Node address		Indicators		
$\times 16^1$	$\times 16^0$	RUN	ERC	ERH
0	0	Not lit	Lit	Not lit

3. Set the rotary switches for the node address to 0F. There will be no change to the indicators.

Node address		Indicators		
$\times 16^1$	$\times 16^0$	RUN	ERC	ERH
0	F	Not lit	Lit	Not lit

4. Set the rotary switches for the node address to FF. The RUN indicator will begin to flash.

Node address		Indicators		
$\times 16^1$	$\times 16^0$	RUN	ERC	ERH
F	F	Flashing	Lit	Not lit

5. Set the rotary switches for the node address to 0F. The Unit mode change function will start, and the ERH indicator will flash for approximately five seconds.

Node address		Indicators		
$\times 16^1$	$\times 16^0$	RUN	ERC	ERH
0	F	Flashing	Lit	Flashing

6. After the mode has been changed, the indicators will appear as shown below, depending on whether the change was completed normally or if an error occurred.

- If the Mode Change was Completed Normally

Node address		Indicators		
$\times 16^1$	$\times 16^0$	RUN	ERC	ERH
0	F	Flashing	Lit	Lit

- If an Error Occurred in the Mode Change

Node address		Indicators		
$\times 16^1$	$\times 16^0$	RUN	ERC	ERH
0	F	Flashing	Lit	Not lit

Note If an error occurs in the mode change, remove the Ethernet Unit, create the I/O tables, and correct the settings using the procedures described in this section.

7. Turn OFF the power to the PLC and return the Ethernet Unit's rotary switches for the node address to its original setting.
8. Turn ON the power to the PLC.

Node address		Indicators		
$\times 16^1$	$\times 16^0$	RUN	ERC	ERH
-	-	Lit	Not lit	Not lit

SECTION 3
CX-Programmer Unit Setup

This section describes how to install the Ethernet Unit and make the initial settings required for operation.

3-1 Setup 62
3-2 FINS/TCP 64
3-3 DNS. 66
3-4 SMTP 67
3-5 POP 68
3-6 Mail Address 69
3-7 Send Mail 70
3-8 Receive Mail 72
3-9 Auto Adjust Time 74
3-10 HTTP. 75

3-1 Setup

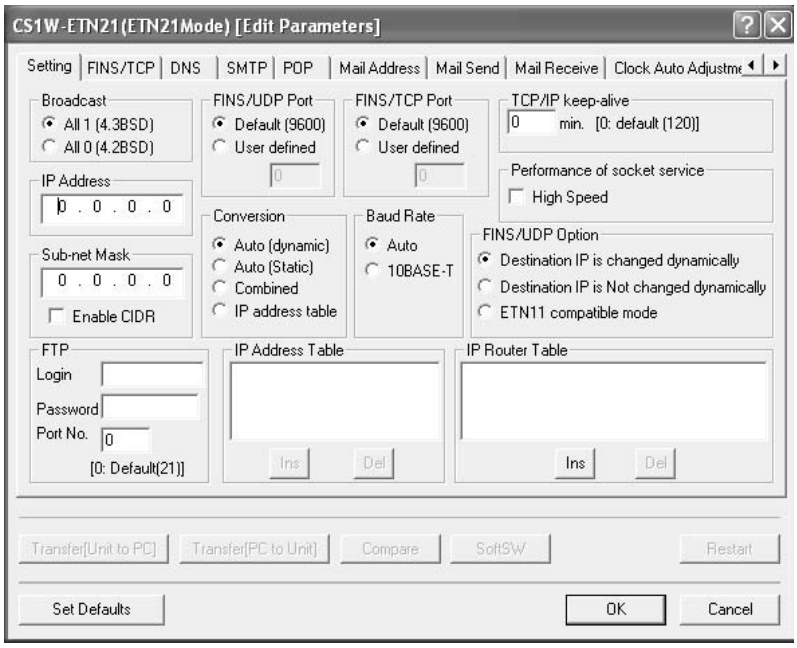

Item	Contents	Default
Broadcast	Set the method for specifying IP addresses for broadcasting in FINS/UDP. • All 1 (4.3BSD): Broadcast with host number set to all ones. • All 0 (4.2BSD): Broadcast with host number set to all zeros. Normally the default setting should be used.	All 1 (4.3BSD)
IP Address	Set the local IP address for the Ethernet Unit.	0.0.0.0 (FINS node address 192.168.250.)
Sub-net Mask	Set the subnet mask for the Ethernet Unit. This is required if a method other than the IP address table method is used for address conversion.	0.0.0.0 (default subnet mask for IP address setting)
Enable CIDR	Set the specifications for the subnet mask. • Disabled: Set for the range of class A, class B, and class C. • Enabled: Classless setting range (192.0.0.0 to 255.255.255.252)	Disabled
FINS/UDP Port	Specify the local UDP port number to be used for the FINS communications service. The UDP port number is the number used for UDP identification of the application layer (i.e., the FINS communications service in this case). • Default (9,600) • User defined (Setting range: 1 to 65,535) **Note:** Make the settings so that UDP port number 123 for SNTP does not overlap with UDP port number 53 for DNS.	9,600
FINS/TCP Port	Specify the local TCP port number to be used for the FINS communications service. The TCP port number is the number used for TCP identification of the application layer (i.e., the FINS communications service in this case). • Default (9,600) • User defined (Setting range: 1 to 65,535) **Note:** Make the settings so that TCP port numbers 20 and 21 for the FTP server, TCP port number 25 for SMTP, TCP port number 110 for POP3, and TCP port number 53 for DNS do not overlap.	9,600

Item		Contents	Default
Conversion		Select any of the following as the method for finding and converting IP addresses from FINS node addresses. (Enabled for FINS/UDP only.) • Automatic generation (dynamic): Auto (dynamic) • Automatic generation (static): Auto (Static) • IP address table method: Table used • Combined method: Mixed	Auto (dynamic)
Destination IP Address (Change Dynamically)		Select to dynamically change the remote (destination) IP address for FINS/UDP. To prohibit dynamic changes, deselect this box.	Checked (Change Dynamically)
Baud Rate		Select the Ethernet baud rate for the Ethernet Unit. Select either automatic detection or 10Base-T. (For 100Base-TX, select automatic detection.)	Auto
TCP/IP keep-alive		Set the liveness-checking interval. When socket services using either FINS/TCP or TCP/IP are used, the connection will be terminated if there is no response from the remote node (either a server or client) within the time set here. (Enabled for socket services using FINS/TCP or TCP/IP only.) Setting range: 0 to 65,535 minutes This setting applies to the keep-alive setting for each connection set with the FINS/TCP tab.	0 (120 minutes)
IP Address Table		Set the IP address table that defines the relationship between FINS node addresses and IP addresses. With FINS/UDP, this is enabled only when the IP address table method is set as the IP address conversion method.	None
IP Router Table		Set when the Ethernet Unit is to communicate through the IP router with nodes on another IP network segment.	None
FTP	Login	Sets the login name for connecting to the Ethernet Unit by FTP.	None
	Password	Sets the password for connecting to the Ethernet Unit by FTP.	None (“CONFIDENTIAL”)
	Port No.	Set the FTP port number for the Ethernet Unit. There is normally no need to change this number. Two ports are used for FTP: a control port and a data transfer port. This setting sets only the control port, and then the data transfer port uses the number that is one less than the control port.	0 (Number 21 is used.)
High-speed Socket Services		Selecting this option improves the performance of processing for sending and receiving using specific bits for socket services. For information on communications performance, refer to *6-9-5 Times Required for Sending and Receiving for Socket Services* in the *Ethernet Units Construction of Applications Operation Manual.* When the *High Speed* Option is selected, socket services that are implemented using a CMND(490) instruction will cause an error.	Disabled

Note

(1) The setting to enable or disable dynamic changing of remote IP addresses is available for Ethernet Units with Unit Ver. 1.3 or later.

(2) Make settings using the unit settings function in the CX-Programmer (to be included in version 5.0 and higher) or using the Web function (refer to *Appendix G Ethernet Unit Web Function*).

(3) The *Enable CIDR* Option and *High Speed* Option for performance of socket service are supported starting with unit version 1.5.

3-2 FINS/TCP

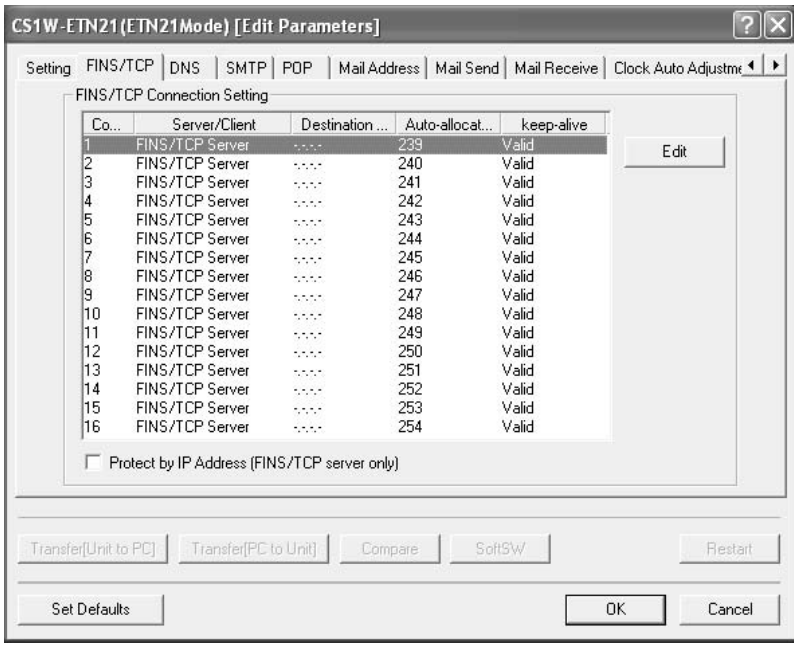

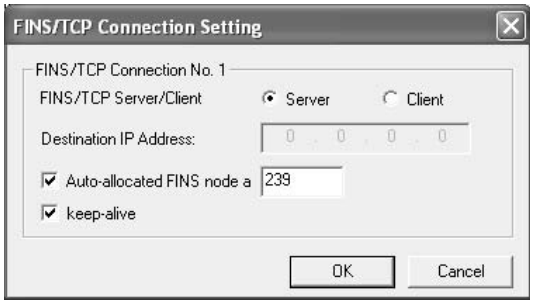

FINS/TCP Connection Setup

Item	Contents	Default
No.	Shows the connection number. This is a network API used when TCP is used for the FINS communications service. It corresponds to a socket in the socket services. Up to 16 can be used at a time, and they are identified by connection numbers 1 to 16. The Ethernet Unit can thus simultaneously execute the FINS communications service by TCP with up to 16 remote nodes.	
Use IP address to protect	When this option is selected, if the Ethernet Unit is set for use as a server, and if a connection number other than 0.0.0.0 is set for a destination IP address, any connection request from other than the number set for that IP address will be denied. Select this option to prevent faulty operation (by FINS commands) from specific nodes from affecting the PLC.	Not protected

The following settings can be made for each connection number.

Item	Contents	Default
FINS/TCP Mode	For each connection number, this setting specifies the Ethernet Unit for use as either a server or a client. • When the Ethernet Unit is used as a server: The Ethernet Unit opens a connection with that connection number and waits for service requests (FINS commands) from clients. Connection numbers are used in ascending order and allocated to clients in the order connections are made. • When the Ethernet Unit is used as a client: The Ethernet Unit establishes a connection with the server set as the destination IP address. Once the connection has been established, FINS/TCP is used for FINS communications.	Server
IP Address	• When the Ethernet Unit is used as a server: If the option is selected to use IP addresses to protect, set the IP addresses as required at clients from which connection is permitted. If not set for those connections, the default setting of 0.0.0.0 can be used. • When the Ethernet Unit is used as a client: Set the IP address for the remote Ethernet Unit (i.e., the server) that is to be connected by FINS/TCP. It is required that an IP address be set for the remote Ethernet Unit.	0.0.0.0
Auto allocated FINS node	If the client (normally a personal computer) application supports FINS/TCP, and if FINS node addresses are not fixed, the client will take 0 as its node address. Then, when a FINS command arrives, the number set here (from 239 to 254) will automatically be allocated as the client's FINS node address. For details on automatic allocation of FINS node addresses, refer to the *Operation Manual Construction of Applications.*	From 239 to 254, for connection Nos. 1 to 16
keep-alive	For each connection number, set whether or not the remote node connection check function is to be used for the FINS/TCP server and client. If the keep-alive box is checked here, then, when the remote node goes without responding for longer than the monitor time set in the Setup, the connection will be terminated. If a remote node turns OFF without warning, the connection will remain open indefinitely, so this option should be used whenever possible.	Use

For details, refer to *SECTION 6 FINS Communications Service* in the *Operation Manual Construction of Network*s.

3-3 DNS

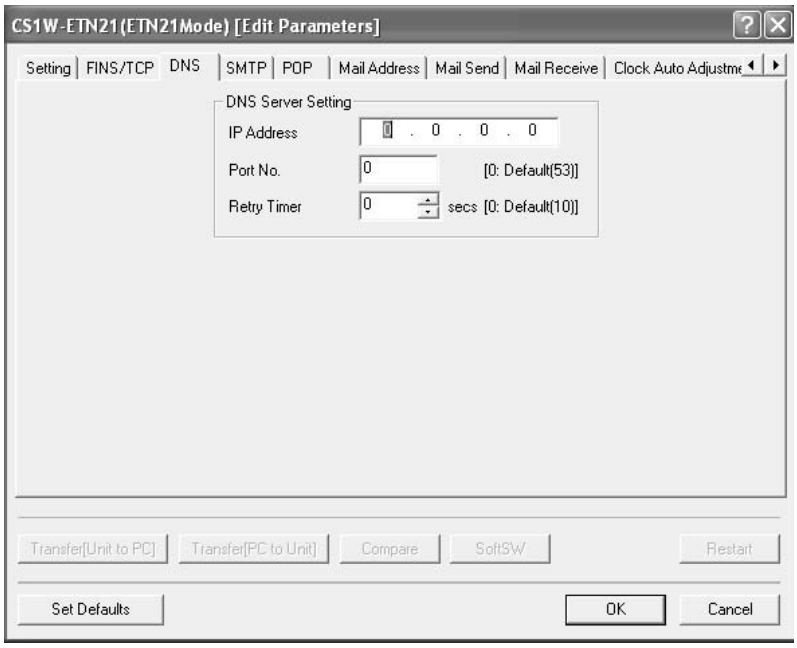

DNS Server Setup

Item	Contents	Default
IP Address	Set the IP address for the DNS server. The DNS server is required when specifying the POP3, SMTP, or SNTP servers by host name for the mail send function or mail receive function.	None
Port No.	Set the port to be used for connecting to the DNS server. This setting does not normally need to be changed.	0 (Number 53 is used.)
Retry Timer	Set the time to elapse before retrying when a connection to the DNS server fails. This setting does not normally need to be changed.	0 (10 s)

3-4 SMTP

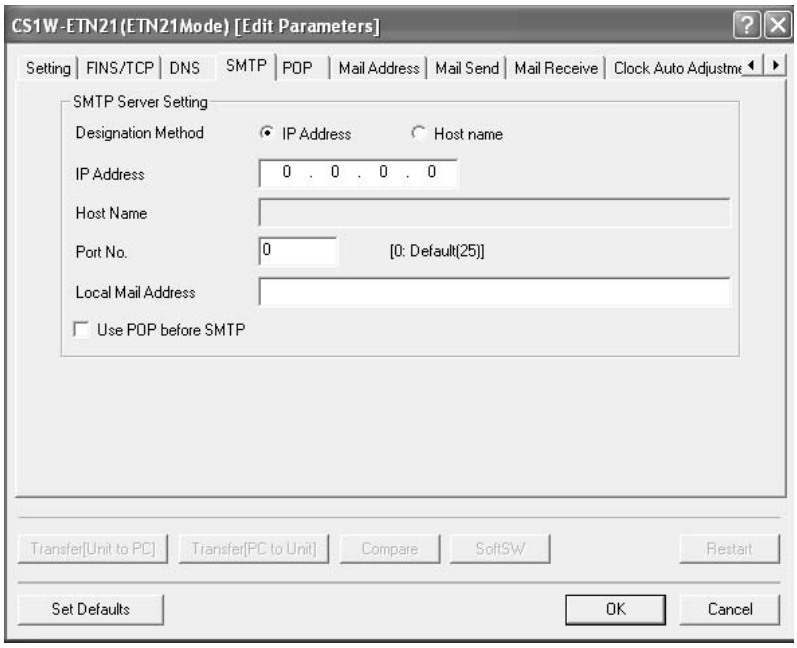

SMTP Server Setup

Item	Contents	Default
Designation Method	Select whether the SMTP server used for sending mail is to be specified by IP address or the host's domain name (i.e., host name).	IP Address
IP Address	Set the IP address for the SMTP server used for sending mail. This setting is enabled only when “IP address” is selected as the method for specifying the server.	0.0.0.0
Host Name	Set the host domain name (i.e., the host name) for the SMTP server that is to be used for sending mail. This setting is enabled only when “host name” is selected as the method for specifying the server.	None
Port No.	Set the port to be used for connecting to the SMTP server that is to be used for sending mail. This setting does not normally need to be changed.	0 (No. 25 is used.)
Local Mail Address	Set the mail address for the Ethernet Unit.	None
Use POP before SMTP	Select whether or not to use the mail receiving method (POP before SMTP) in which the POP server must be accessed (to receive mail) before the SMTP server is accessed (to send mail).	Not checked

For details, refer to *SECTION 2 Mail Send Function* in the *Operation Manual Construction of Applications*.

3-5 POP

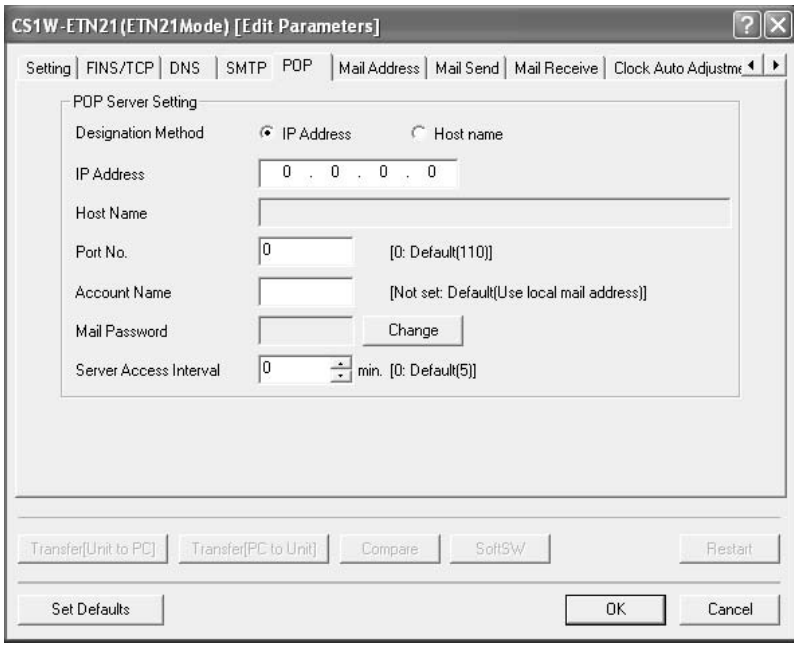

POP Server Setup

Item	Contents	Default
Designation Method	Select whether the POP3 server used for receiving mail is to be specified by IP address or the host's domain name (i.e., host name).	IP Address
IP Address	Set the IP address for the POP3 server used for receiving mail. This setting is enabled only when “IP address” is selected as the method for specifying the server.	0.0.0.0
Host Name	Set the host domain name (i.e., the host name) for the POP3 server that is to be used for receiving mail. This setting is enabled only when “host name” is selected as the method for specifying the server.	None
Port No.	Set the port to be used for connecting to the POP3 server that is to be used for receiving mail. This setting does not normally need to be changed.	0 (Number 110 is used.)
Account Name	Set the account name to be used for sending and receiving mail. Only alphanumeric characters can be used. If no account name is set, the portion of the local e-mail address to the left of the @ will be used.	None
Mail Password	Set a password for the account that is to be used for sending and receiving mail.	None
Server Access Interval	Set the interval for sending and receiving mail. Mail will be automatically sent and received at the interval set here.	0 (5 minutes)

For details, refer to *SECTION 3 Mail Receive Function* in the *Operation Manual Construction of Applications*.

3-6 Mail Address

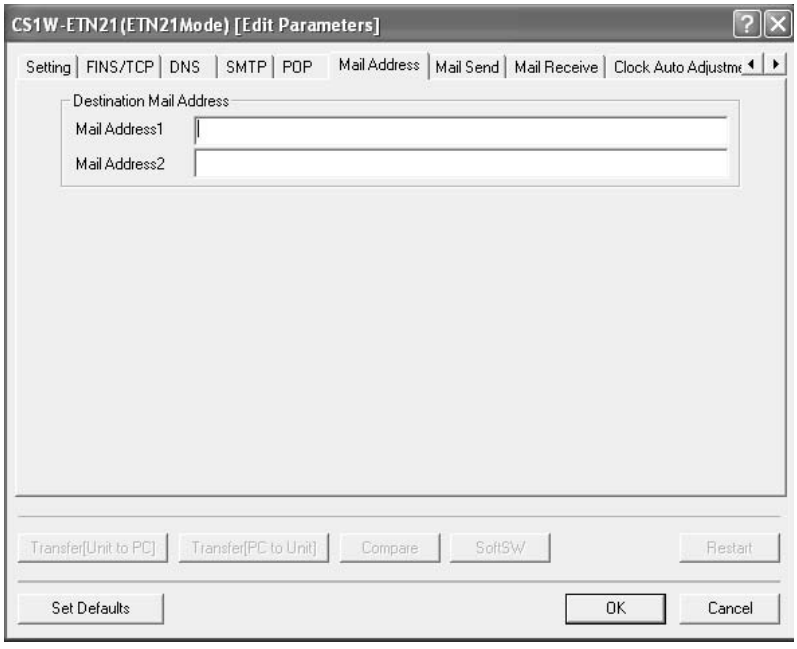

Destination Mail Address Setup

Item	Contents	Default
Mail Address 1	Set one of the addresses to which the Ethernet Unit is to send mail. (Up to two address can be set.) **Note:** Mail can be sent to multiple addresses by punctuating the mail address with commas.	None
Mail Address 2	Set one of the addresses to which the Ethernet Unit is to send mail. (Up to two address can be set.) **Note:** Mail can be sent to multiple addresses by punctuating the mail address with commas.	None

For details, refer to *SECTION 2 Mail Send Function* in the *Operation Manual Construction of Applications*.

3-7 Send Mail

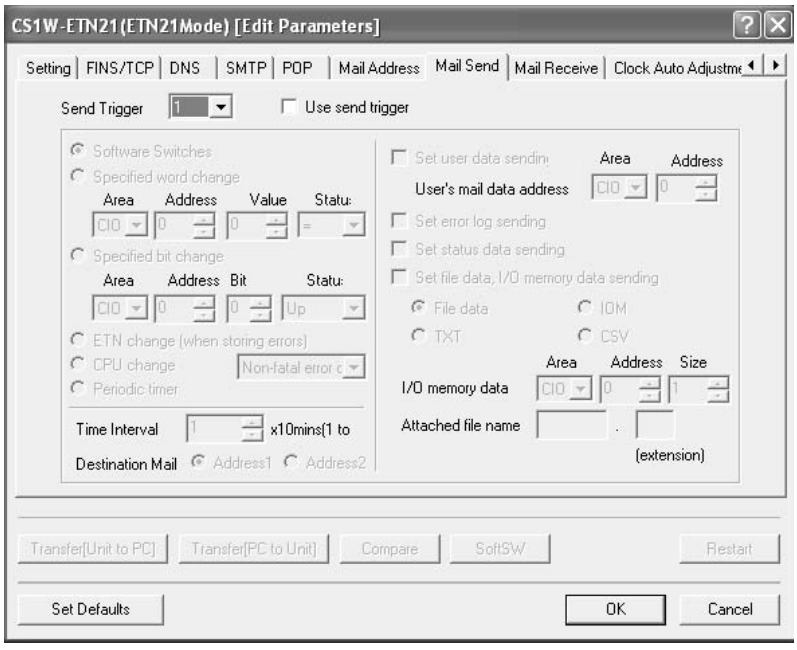

Item	Contents	Default
Send Trigger	Select a number as the trigger condition for sending mail. Up to eight trigger numbers can be registered.	---
Use send trigger	Sets whether or not the selected mail trigger is to be enabled.	Not checked

Item		Contents	Default
Mail trigger type (Select only one.)	Software switch	If this option is selected, mail is sent whenever the Mail Send Switch turns ON. The Mail Send Switch is bit 03 of word n in the words allocated for CPU Bus Units. (n = 1500 + 25 x unit number)	Checked
	Word value change	If this option is selected, the value of a specified address is compared with a standard comparison value using one of the following comparison functions, and mail is sent whenever the condition is satisfied. =, <>, <, <=, >=, > Select the address for storing the comparison value from the drop-down list.	Not checked
	Bit value change	If this option is selected, mail is sent whenever a specified bit turns ON or whenever it turns OFF. Select the bit address from the drop-down list below.	Not checked
	ETN condition	If this option is selected, mail is sent whenever a new error is stored in the Ethernet Unit's error log.	Not checked
	CPU condition	If this option is selected, mail is sent whenever any of the following conditions occur at the CPU Unit. The drop-down list at the right can be used to select which of these three are to serve as mail triggers. • When a non-fatal error occurs • When a fatal error occurs • When the operating mode is changed	Not checked
	Interval time (Periodic timer)	If this option is selected, mail is sent at fixed time intervals. The time interval (in minutes) can be set in the interval time box.	Not checked
Mail address		Select the destination mail address. The mail destination is the one set under the Mail Address tab.	Address 1
Send user data		If this option is selected, user-created data is sent in the body of the mail. The location for storing the user-created data is set by the user-defined mail address setting below.	Not checked
Send Error Log information		If this option is selected, the error log is included in the body of the mail.	Not checked
Send status information		If this option is selected, status information is included in the body of the mail.	Not checked
Send file data/I/O memory data		If this option is selected, any of the following types of data can be sent as file attachments to e-mail. • I/O memory data (.IOM) • I/O memory data (.TXT) • I/O memory data (.CSV) • File data (any file) Select the type of data to be attached from the checkboxes below. If I/O memory data is selected, then also select, in “I/O memory data” below, the address and range of data to be sent.	Not checked
Attached file name		If the above setting is checked so that files can be sent as attachments, then specify the name of the file that is to be sent.	None

Item	Contents		Default
Interval time	When “Periodic timer” is set as the mail trigger type	Set the time interval for sending mail. 1 to 1,440 (10 to 14,400 min), in units of 10 min	0 (10 minutes)
	When “Bit value change” or “Word value change” is set as the mail trigger type	Set the time interval for monitoring the value at a specified address. 1 to 1,000 (1 to 1,000 s), in units of 1 s Default: 0000	0 (1 second)

For details, refer to *SECTION 2 Mail Send Function* in the *Operation Manual Construction of Applications*.

3-8 Receive Mail

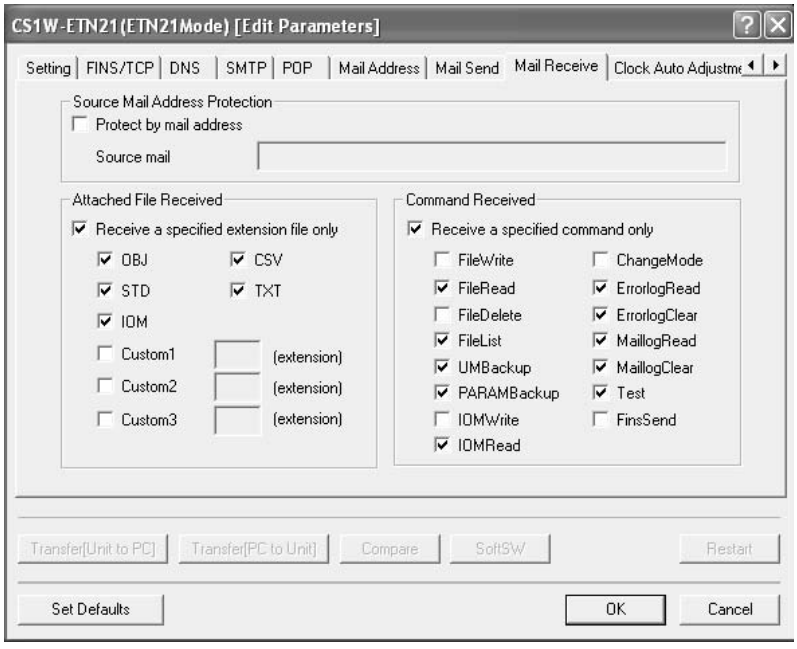

Posting Mail Address Protection Setting

Item	Contents	Default
Protect by mail address	If this option is selected, mail from sources other than specified addresses is denied. Use the “Mail address” text box below to specify the sources from which to receive mail.	Not checked
Source mail	Set the mail address if the option has been checked to protect using mail address. Mail will not be accepted from sources other than the mail address set here.	None

Receive Attached File Setting

Item	Contents	Default
Receive a specified extension file only	If this option is selected, only file attachments with specified extensions is accepted with mail. Use the checkboxes below to select which file extensions are to be accepted. Multiple extensions can be selected.	Not checked
OBJ	If this option is selected, an OBJ file (which can be created using the CX-Programmer) containing all cyclic task and interrupt task programs in the CPU Unit will be received.	Checked
STD	If this option is selected, an STD file containing the PLC Setup, registered I/O tables, routing tables, Unit Setups, etc. (which can be read from the CPU Unit using the CX-Programmer) will be received.	
IOM	If this option is selected, an IOM file containing bit data from beginning to end of a memory area (which can be created using the CX-Programmer) will be received.	
CSV	If this option is selected, CSV files (created by programs such as Excel) can be received.	
TXT	If this option is selected, text files can be received.	
Custom 1 to 3	If this option is selected, files with extensions specified by the user can be received.	

Receive Command Setting

Item	Contents	Default
Receive a specified command only	If this option is selected, only specified remote mail commands are executed. The commands to be received can be specified in the checkboxes below.	Checked
FileWrite	If checked, files can be written.	Not checked
FileRead	If checked, files can be read.	Checked
FileDelete	If checked, files can be deleted.	Not checked
FileList	If checked, files can be listed.	Checked
UMBackup	If checked, the user program can be backed up.	Checked
PARAMBackup	If checked, the parameter area can be backed up.	Checked
IOMWrite	If checked, writing to the I/O memory area is permitted.	Not checked
IOMRead	If checked, the I/O memory area can be read.	Checked
ChangeMode	If checked, the operating mode can be changed.	Not checked
ErrorLogRead	If checked, the error log can be read.	Checked
ErrorLogClear	If checked, the error log can be cleared.	Checked
MailLogRead	If checked, the mail log can be read.	Checked
MailLogClear	If checked, the mail log can be cleared.	Checked
Test	If checked, the mail receive test can be executed.	Checked
FinsSend	If checked, FINS commands can be executed.	Not checked

For details, refer to *SECTION 3 Mail Receive Function* in the *Operation Manual Construction of Applications*.

3-9 Auto Adjust Time

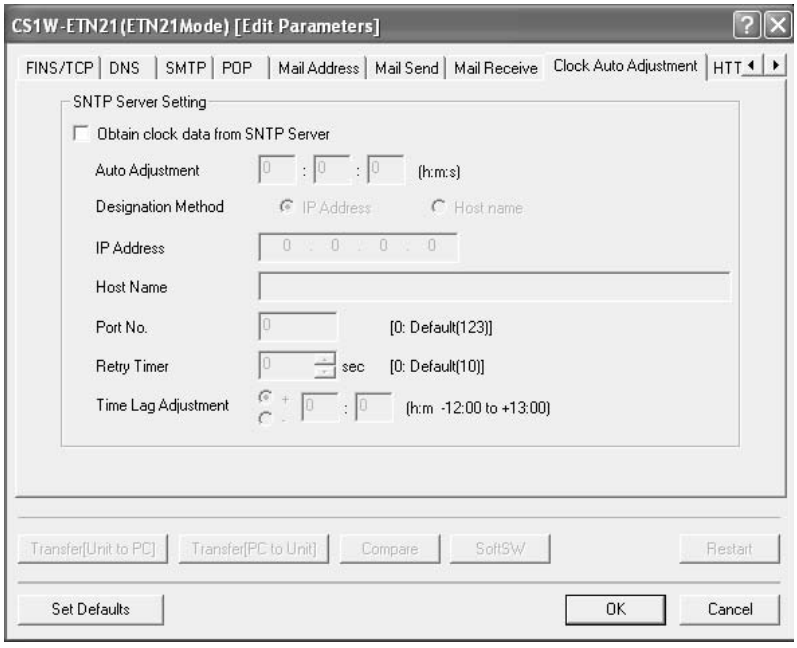

SNTP Server Setup

Item	Contents	Default
Obtain clock data from SNTP server	If this option is selected, the CPU Unit's clock is set to the time at the SNTP server's clock. The clock can be changed only for the CPU Unit to which the Ethernet Unit is mounted.	Not checked
Auto Adjustment	Set the time at which the SNTP server is to be accessed to synchronize the clocks. When the time that is set here arrives, the SNTP server is accessed and the CPU Unit clock is adjusted to match the SNTP server clock.	0:0:0
Designation Method	Select whether the SNTP server used for automatic clock adjustment is to be specified by IP address or by host domain name (i.e., by host name).	IP Address
IP Address	Set the IP address for the SNTP server that is to be used for automatic clock adjustment. This setting is enabled only when server specification by IP address has been selected.	0.0.0.0
Host Name	Set the host domain name (i.e., the host name) for the SNTP server that is to be used for automatic clock adjustment. This setting is enabled only when server specification by host name has been selected.	None
Port No.	Set the port number for connecting to the SNTP server that is to be used for automatic clock adjustment. This setting does not normally need to be changed.	0 (Number 123 is used.)

Item	Contents	Default
Retry Timer	Set the time to elapse before retrying when a connection to the SNTP server fails. This setting does not normally need to be changed.	0 (10 s)
Time Lag Adjustment	This sets in the CPU Unit's clock data the time difference made up from the SNTP server's clock data. To use the clock data from the SNTP server just as it is, input 0.	+0:0

For details, refer to SECTION 5 Automatic Clock Adjustment Function in the *Operation Manual Construction of Applications*.

3-10 HTTP

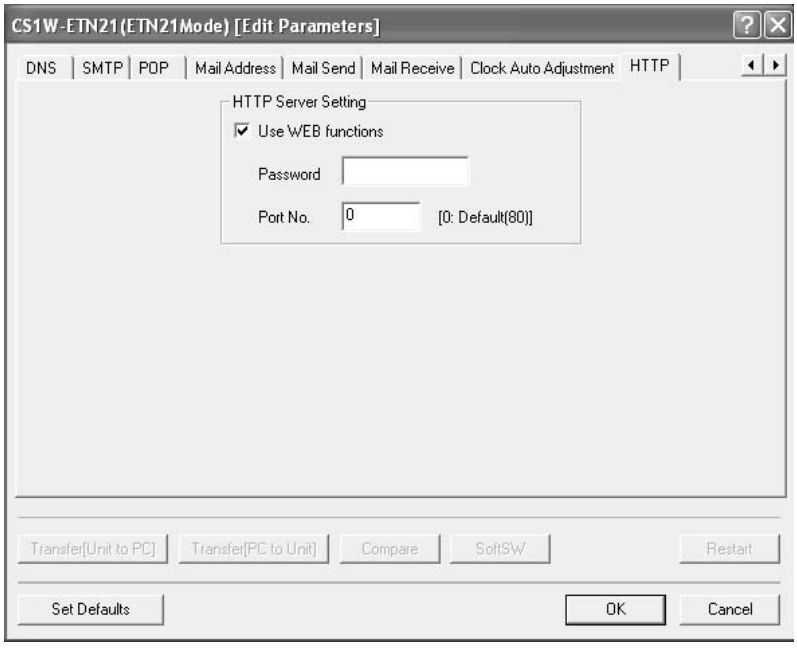

HTTP Server Setup

Item	Contents	Default
Use WEB functions	Select to use or prohibit the Web function. Deselect this option to prohibit use of the Web function.	Checked (Web function is used.)
Password	Sets the password for accessing the Ethernet Unit's settings and status monitoring information using a Web browser.	None ("ETHERNET" is used.)
Port No.	Sets the port No. used to connect to the Web browser.	0 (80 is used.)

For details, refer to *Appendix G Ethernet Unit Web Function*.

Note

(1) The HTTP Server Setup is supported by Ethernet Units with Unit Ver. 1.3 or later.

(2) Make settings using the unit settings function in the CX-Programmer (to be included in version 5.0 and higher) or using the Web function (refer to *Appendix G Ethernet Unit Web Function*).

SECTION 4
Ethernet Unit Memory Allocations

This section describes the words allocated in the CIO Area and the DM Area for Ethernet Units.

4-1 CIO Area Allocations 78
4-2 DM Area Allocations 86
4-3 Auxiliary Area Data 90

4-1 CIO Area Allocations

The various kinds of data are stored in the offset positions shown in the following diagram, from the beginning word in the area for each Unit.

The beginning word n is calculated by the following equation:

Beginning word n = CIO 1500 + (25 × unit number)

Offset	Bit 15 – 08	Bit 07 – 00	Data direction	Related communications services
n	Unit Control Switch		CPU Unit to Ethernet Unit	Socket Services (Refer to *Operation Manual, Construction of Applications, SECTION 6.*)
n+1	UDP Socket No. 1 Status		Ethernet Unit to CPU Unit	
n+2	UDP Socket No. 2 Status			
n+3	UDP Socket No. 3 Status			
n+4	UDP Socket No. 4 Status			Mail Function (Refer to *Operation Manual, Construction of Applications, SECTION 2.*)
n+5	UDP Socket No. 5 Status			
n+6	UDP Socket No. 6 Status			
n+7	UDP Socket No. 7 Status			
n+8	UDP Socket No. 8 Status			
n+9	TCP Socket No. 1 Status			Socket Services (Refer to *Operation Manual, Construction of Applications, SECTION 6.*)
n+10	TCP Socket No. 2 Status			
n+11	TCP Socket No. 3 Status			
n+12	TCP Socket No. 4 Status			
n+13	TCP Socket No. 5 Status			
n+14	TCP Socket No. 6 Status			
n+15	TCP Socket No. 7 Status			
n+16	TCP Socket No. 8 Status			
n+17	Service Status			FTP Service, etc.
n+18	Error Status			All error conditions
n+19	Socket Service Request Switches 2	Socket Service Request Switches 1	CPU Unit to Ethernet Unit	Socket Services (Refer to *Operation Manual, Construction of Applications, SECTION 6.*)
n+20	Socket Service Request Switches 4	Socket Service Request Switches 3		
n+21	Socket Service Request Switches 6	Socket Service Request Switches 5		
n+22	Socket Service Request Switches 8	Socket Service Request Switches 7		
n+23	FINS/TCP Connection Status		Ethernet Unit to CPU Unit	FINS Communications
n+24	(Not used.)			(Refer to *SECTION 6 FINS Communications.*)

The following items in the diagram can also be checked using software switch settings on the CX-Programmer.

- The status of UDP/TCP sockets 1 to 8 (Opening Flag, Receiving Flag, Sending Flag, Closing Flag, Results Storage Error Flag, Socket Open Flag)
- Service status (FTP status)
- FINS/TCP Connection Status

For explanations of how to use the related communications services listed in the above diagram, refer to the indicated sections.

Unit Control Bits (CPU Unit to Ethernet Unit)

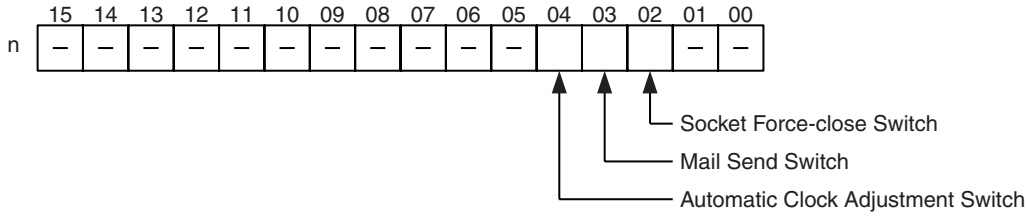

Bit	Switch	Status	Manipulated by	Unit operation	Reference
00 to 01	(Not used.)	---	---	---	---
02	Socket Force-close Switch	ON	User	All sockets are forcibly closed when this bit turns ON.	*Operation Manual, Construction of Applications, SECTION 6*
		OFF	Unit	Turned OFF by Unit after sockets are closed.	
03	Mail Send Switch	ON	User	User mail is sent when this bit turns ON.	*Operation Manual, Construction of Applications, SECTION 2*
		OFF	Unit	Turned OFF by Unit after user mail has been sent.	
04	Automatic Clock Adjustment Switch	ON	User	The automatic clock adjustment is executed when this bit turns ON.	*Operation Manual, Construction of Applications, SECTION 5*
		OFF	Unit	Turned OFF by Unit after automatic clock adjustment has been completed.	
05 to 15	(Not used.)	---	---	---	---

Socket Force-close Switch (Bit 02)

All UDP and TCP sockets used for socket services can be force-closed by turning ON this switch. This can be used for operations such as error processing.

Be careful not to force-close sockets during communications, or an error will occur. After all sockets have been force-closed, the Ethernet Unit will turn the switch OFF again. Do not attempt to forcibly manipulate this switch before it is automatically turned OFF by the Unit.

Ports used exclusively by the Ethernet Unit will not be closed.

Mail Send Switch (Bit 03)

User mail can be sent by turning ON this switch. The contents of the user mail are set in the CPU Bus Unit System Setup.

After the user mail has been sent, the Ethernet Unit will turn this switch OFF again. Do not attempt to forcibly manipulate this switch before it is automatically turned OFF by the Unit.

Automatic Clock Adjustment Switch (Bit 04)

The automatic clock adjustment can be executed by turning this switch ON. The SNTP server required for the automatic clock adjustment is set in the Unit Setup.

After the automatic clock adjustment has been completed, the Ethernet Unit will automatically turn this switch OFF. Until then, do not forcibly manipulate the switch.

Status of UDP/TCP Sockets 1 to 8 (Ethernet Unit to CPU Unit)

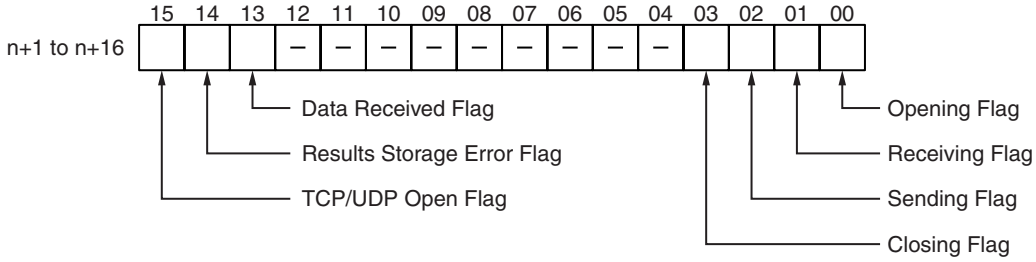

Bit	Flag	Status	Manipulated by	Unit operation	Reference
00	Opening Flag	ON	Unit	ON during open processing. (Turns ON when open request is received.)	*Operation Manual, Construction of Applications, SECTION 6*
		OFF	Unit	OFF when open processing has been completed.	
01	Receiving Flag	ON	Unit	ON during receive processing. (Turns ON when receive request is received if high-speed option is disabled and remains OFF when high-speed processing is enabled.)	
		OFF	Unit	OFF when receive processing has been completed.	
02	Sending Flag	ON	Unit	ON during send processing. (Turns ON when receive request is received if high-speed option is disabled and remains OFF when high-speed processing is enabled.)	
		OFF	Unit	OFF when send processing has been completed.	
03	Closing Flag	ON	Unit	ON during close processing. (Turns ON when close request is received.)	
		OFF	Unit	OFF when close processing has been completed.	
04 to 12	(Not used.)	---	---	---	---
13	Data Received Flag	ON	Unit	ON when data from a remote node has been received at an open TCP socket.	*Operation Manual, Construction of Applications, SECTION 6*
		OFF	Unit	OFF when receive processing has been requested for an open TCP socket.	
14	Results Storage Error Flag	ON	Unit	ON if there is an error in storing the results when socket services are used by means of the CMND(490) instruction.	
		OFF	Unit	Turns OFF when the next request is received. (Connected by TCP.)	
15	TCP/UDP Open Flag	ON	Unit	ON when open processing has been completed.	
		OFF	Unit	OFF when close processing has been completed. (Stays OFF for abnormal open processing completion.)	

Note The status of these flags can also be checked using the software switch settings on the CX-Programmer.

Opening Flag (Bit 00)

Turns ON when an open request is received either by control bit manipulation or the CMND(490) instruction, and turns OFF again when the open processing has been completed. When CMND(490) is used, the Results Storage Error Flag (bit 14) will turn ON at the same time as the Opening Flag turns OFF if there is an error in the Results Storage Area designation.

Receiving Flag (Bit 01)

Turns ON if the High-Speed Option is not selected when a receive request is received either by control bit manipulation or the CMND(490) instruction. Remains OFF if the High-Speed Option is selected. Turns OFF again when the receive processing has been completed. When CMND(490) is used, the Results Storage Error Flag (bit 14) will turn ON at the same time as the Receiving Flag turns OFF if there is an error in the Results Storage Area designation.

Sending Flag (Bit 02)

Turns ON if the High-Speed Option is not selected when a send request is received either by control bit manipulation or the CMND(490) instruction and turns OFF again when the send processing has been completed. Remains OFF if the High-Speed Option is selected. When CMND(490) is used, the Results Storage Error Flag (bit 14) will turn ON at the same time as the Sending Flag turns OFF if there is an error in the Results Storage Area designation.

Closing Flag (Bit 03)

Turns ON when a close request is received either by control bit manipulation or the CMND(490) instruction, and turns OFF again when the close processing has been completed. When CMND(490) is used, the Results Storage Error Flag (bit 14) will turn ON at the same time as the Closing Flag turns OFF if there is an error in the Results Storage Area designation.

Data Received Flag (Bit 13)

This bit turns ON when data is received from a remote node at an open TCP socket. Linked to this flag, the number of bytes of data saved in the reception buffer is stored in Number of Bytes Received at TCP Socket in the words allocated in the DM Area. The bit is turned OFF when a receive request is made by either bit manipulation or the CMND(490) instruction. If any data remains in the reception buffer after the receive request processing is complete, the number of bytes is stored in Number of Bytes Received at TCP Socket and the Data Received Flag turns ON again.

The status of this flag is checked before a receive request is executed.

Results Storage Error Flag (Bit 14)

Turns ON if there is an error in the Results Storage Area for a socket service request (open, receive, send, close) made using CMND(490). This flag turns ON at the same time as the services request processing flags (bits 0 to 3) turn OFF. It remains ON until the next services request is received, and then it turns OFF again. When this flag turns ON, check the set values in the Results Storage Area.

The Results Storage Error Flag does not operate when socket services are requested by control bit manipulation.

TCP/UDP Open Flag (Bit 15)

Remains ON while a socket is open by means of control bit manipulation or the CMND(490) instruction. In the case of TCP, it indicates a connection. When the socket is closed, this flag turns OFF again. (If the socket did not close properly, the flag remains ON.)

Check to be sure that this flag is ON before executing a send or receive request.

Service Status (Ethernet Unit to CPU Unit)

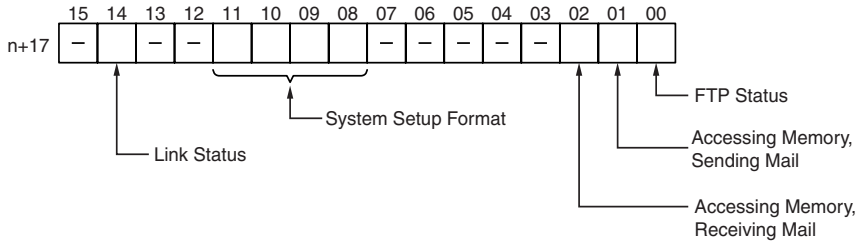

Bit	Name	Status	Manipulated by	Unit operation	Reference
00	FTP Status Flag	ON	Unit	FTP server operating. (FTP client connected.)	*Operation Manual, Construction of Applications, SECTION 4*
		OFF	Unit	FTP server on standby. (FTP client not connect.)	
01	Accessing Memory, Sending Mail	ON	Unit	ON while CPU Unit memory is being accessed to create a file to be attached using the mail send function.	*Operation Manual, Construction of Applications, SECTION 2*
		OFF	Unit	OFF when the file to be attached has been created.	
02	Accessing Memory, Receiving Mail	ON	Unit	ON while CPU Unit memory is being accessed to store an attached file using the mail receive function.	*Operation Manual, Construction of Applications, SECTION 3*
		OFF	Unit	OFF when the attached file has been stored.	
03 to 07	(Not used.)	---	---	---	---
08 to 11	System Setup Format	ON	Unit	Shows the current format in the CPU Bus Unit System Setup Area by the ON/OFF status of a combination of bits.	*SECTION 2 Installation and Initial Setup*
		OFF	Unit		
12 to 13	(Not used.)	---	---	---	---
14	Link Status	ON	Unit	ON while a link is established between hubs.	---
		OFF	Unit	OFF when the link between hubs is terminated.	
15	(Not used.)	---	---	---	---

FTP Status (Bit 00)

Turns ON while connected to an FTP client, and OFF while not connected. With the FTP server function only one FTP client can be connected at a time, so while this bit is ON no other clients can connect to the server.

The FTP status is also shown by the Ethernet Unit's FTP indicator, as follows:

Not lit: FTP server on standby. (FTP status: OFF)
Lit: FTP server operating. (FTP status: ON)

Accessing Memory (Sending Mail) (Bit 01)

This bit turns ON while CPU Unit memory is being accessed to create a file to be attached using the mail send function, and it turns OFF when the file has been created.

ON while CPU Unit memory is being accessed to store an attached file using the mail receive function.

Accessing Memory (Receiving Mail) (Bit 02)

This bit turns ON while CPU Unit memory is being accessed to store an attached file using the mail receive function, and it turns OFF after the file has been stored.

System Setup Format (Bits 08 to 11)

These bits show the format classification in the CPU Bus Unit System Setup Area.

Bit address				Format classification
11	10	09	08	
0	0	0	0	ETN11 mode
0	0	0	1	ETN21 mode
Other				Reserve

Error Status (Ethernet Unit to CPU Unit)

The status of errors that occur at the Ethernet Unit is reflected as shown in the following diagram.

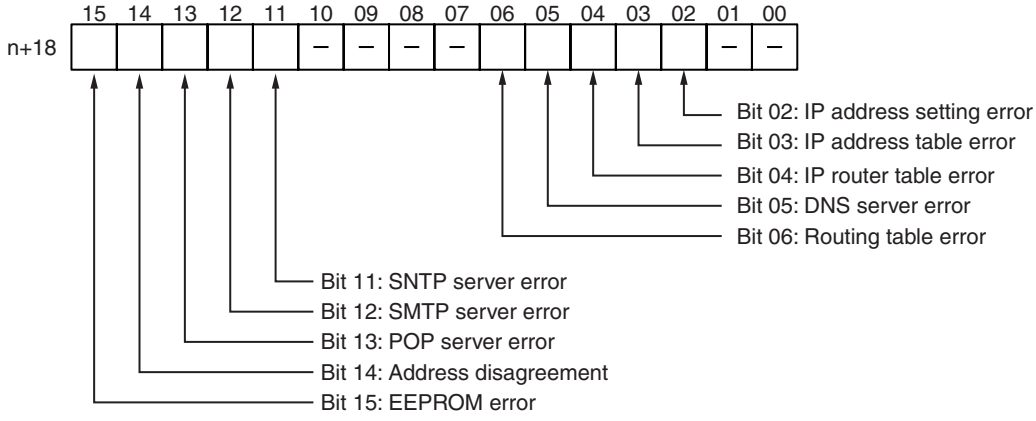

Bit	Error	Status	Manipulated by	Unit operation
00 to 01	(Not used.)	---	---	---
02	IP address setting error	ON	Unit	ON if any of the following conditions apply to the IP address. • All bits in the host ID are 0 or 1. • All bits in the network ID are 0 or 1. • All bits in the subnet ID are 1. • The IP address begins with 127 (0x7F)
		OFF	Unit	OFF when the IP address is normal.
03	IP address table error	ON	Unit	On if the IP address table information is incorrect.
		OFF	Unit	OFF when the IP address table is normal.
04	IP router table error	ON	Unit	ON if the IP router table information is incorrect.
		OFF	Unit	OFF when the IP address table is normal.

Bit	Error	Status	Manipulated by	Unit operation
05	DNS server error	ON	Unit	ON when the following errors occur during DNS server operation: • An illegal server IP address is set. • A timeout occurs during communications with the server.
		OFF	Unit	OFF when DNS server operation is normal.
06	Routing table error	ON	Unit	ON if the routing table information is incorrect.
		OFF	Unit	OFF when the routing table is normal.
07 to 10	(Not used.)	---	---	---
11	SNTP server error	ON	Unit	ON when the following errors occur during SNTP server operation: • An illegal server IP address or host name is set. • A timeout occurs during communications with the server.
		OFF	Unit	OFF when SNTP server operation is normal.
12	SMTP server error	ON	Unit	ON when the following errors occur during SMTP server operation: • An illegal server IP address or host name is set. • A timeout occurs during communications with the server. • The verification time from the server has expired (when POP before SMTP is set).
		OFF	Unit	OFF when SMTP server operation is normal.
13	POP server error	ON	Unit	ON when the following errors occur during POP server operation: • An illegal server IP address or host name is set. • A server verification error (user name or password) occurs. • A timeout occurs during communications with the server.
		OFF	Unit	OFF when use of the POP server is normal.
14	Address disagreement	ON	Unit	ON if the remote IP address is set to automatic generation but the local IP address host number and FINS node address do not agree.
		OFF	Unit	OFF under all other circumstances.
15	EEPROM error	ON	Unit	ON if an error has occurred in the EEPROM memory.
		OFF	Unit	OFF when the EEPROM memory is normal.

Socket Service Request Switches 1 to 8 (CPU Unit to Ethernet Unit)

When a socket service request is executed by control bit manipulation, it is the following bits that are manipulated. For details, refer to *Operation Manual, Construction of Applications, SECTION 6*.

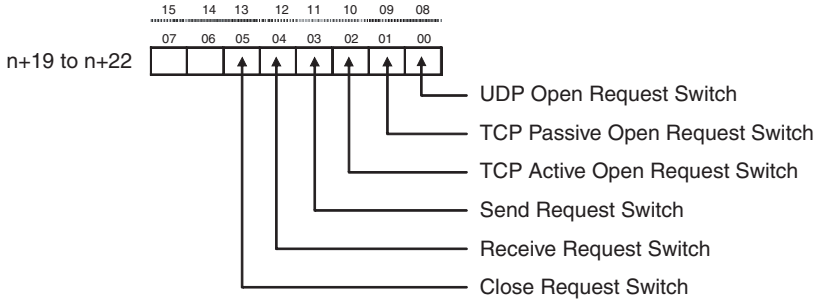

Bit		Switch	Status	Manipulated by	Unit operation	Reference
08	00	UDP Open Request Switch	ON	User	UDP socket opened when switch is turned ON.	*Operation Manual, Construction of Applications, SECTION 6*
			OFF	Unit	Unit turns OFF switch when open processing has been completed (i.e., when a connection has been made).	
09	01	TCP Passive Open Request Switch	ON	User	Passive TCP socket opened when switch is turned ON.	
			OFF	Unit	Unit turns OFF switch when open processing has been completed (i.e., when a connection has been made).	
10	02	TCP Active Open Request Switch	ON	User	Active TCP socket opened when switch is turned ON.	
			OFF	Unit	Unit turns OFF switch when open processing has been completed (i.e., when a connection has been made).	
11	03	Send Request Switch	ON	User	Send processing executed when switch is turned ON. (The protocol (TCP/UDP) is determined when the socket is opened.)	
			OFF	Unit	Unit turns OFF switch when send processing has been completed.	
12	04	Receive Request Switch	ON	User	Receive processing executed when switch is turned ON. (The protocol (TCP/UDP) is determined when the socket is opened.)	
			OFF	Unit	Unit turns OFF switch when receive processing has been completed.	
13	05	Close Request Switch	ON	User	Close processing executed when switch is turned ON. (The protocol (TCP/UDP) is determined when the socket is opened.)	
			OFF	Unit	Unit turns OFF switch when close processing has been completed.	
14	06	(Not used.)	---	---	---	---
15	07	(Not used.)	---	---	---	---

FINS/TCP Connection Status

	15	14	13	12	11	10	09	08	07	06	05	04	03	02	01	00
n+23																

These bits show the status of FINS/TCP connections.

Bit	Switch	Status	Manipulated by	Unit operation	Reference
00	FINS/TCP Connection No.1	ON	Unit	Turned ON by the Unit when a connection is established.	*SECTION 6 FINS Communications Service*
		OFF	Unit	Turned OFF by the Unit when the connection is terminated.	
01	FINS/TCP Connection No.2	ON	Unit	Turned ON by the Unit when a connection is established.	
		OFF	Unit	Turned OFF by the Unit when the connection is terminated.	
to	to	to	to	to	
14	FINS/TCP Connection No.15	ON	Unit	Turned ON by the Unit when a connection is established.	
		OFF	Unit	Turned OFF by the Unit when the connection is terminated.	
15	FINS/TCP Connection No.16	ON	Unit	Turned ON by the Unit when a connection is established.	
		OFF	Unit	Turned OFF by the Unit when the connection is terminated.	

4-2 DM Area Allocations

The various kinds of data are stored in the offset positions shown in the following diagram, from the beginning word in the area for each Unit.

The beginning word m is calculated by the following equation:

Beginning word m = D30000 + (100 x unit number)

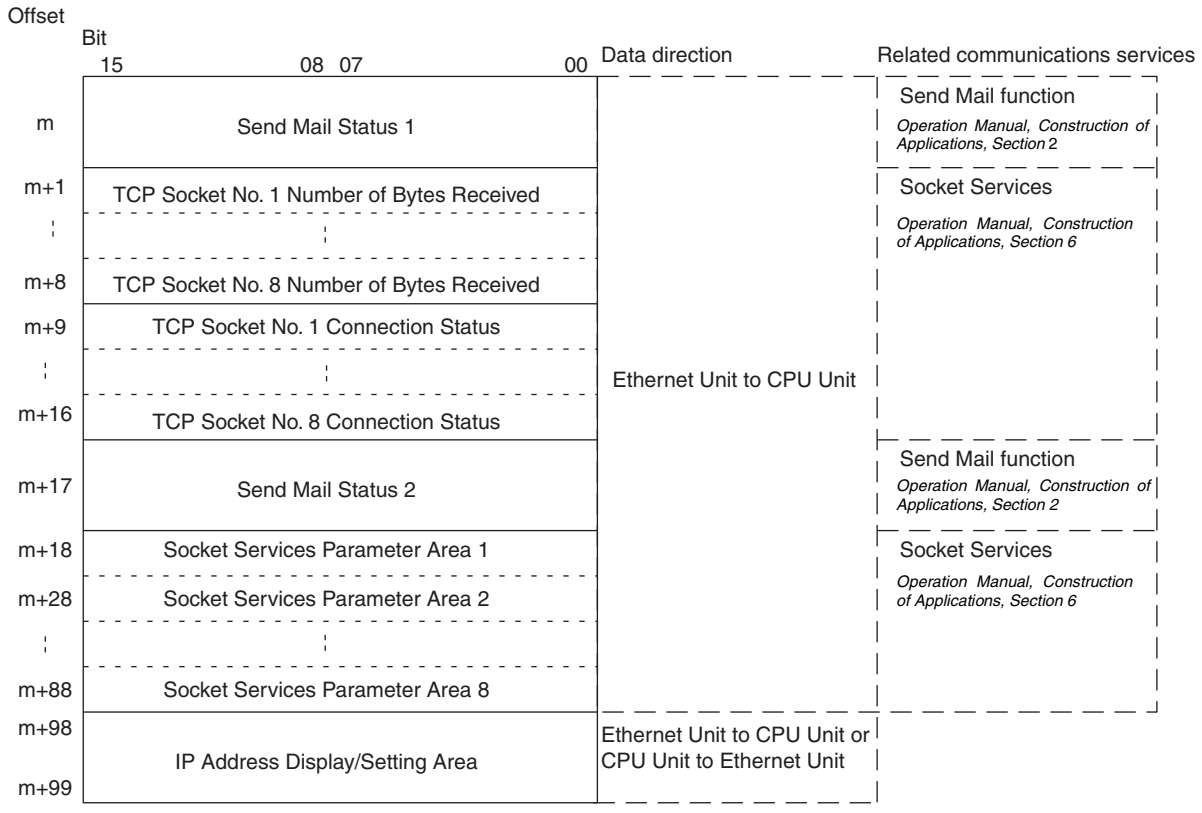

The meanings of the items shown in the above diagram are explained on the following pages. For details regarding the related communications services shown in the diagram, refer to the indicated sections.

Send Mail Status 1, 2 (Ethernet Unit to CPU Unit)

Send Mail Status 1

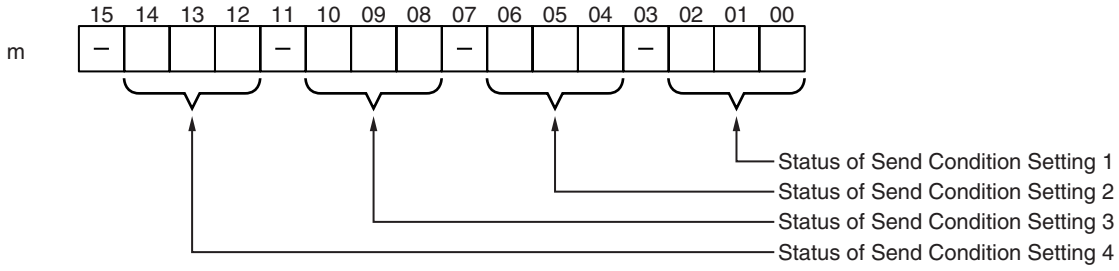

Send Mail Status 2

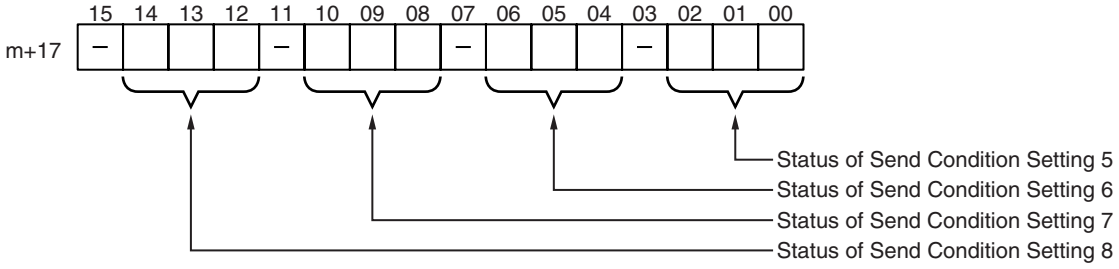

The transmission status of user mail, periodic mail, and error log mail are stored in this word as shown in the following table.

Bits			Status
02	**01**	**00**	
06	**05**	**04**	
10	**09**	**08**	
14	**13**	**12**	
OFF	OFF	OFF	Mail is either waiting to be sent or can be sent using the Mail Send Switch. No mail is being sent.
OFF	OFF	ON	Mail is being sent.
OFF	ON	OFF	Mail is either waiting to be sent or can be sent using the Mail Send Switch. The previous mail transmission was completed normally.
ON	ON	OFF	Mail is either waiting to be sent or can be sent using the Mail Send Switch. An error occurred in the previous mail transmission.
ON	ON	ON	Mail cannot be sent (system setting error).

While mail is being sent, the transmission status of the three bits each for send condition settings 1 to 8, i.e., bits 02, 01, and 00; bits 06, 05, and 04; or bits 10, 09, an 08 are 0, 0, and 1 respectively. After the transmission has been completed normally, they become 0, 1, and 0. If the transmission is ended with an error, they become 1, 1, and 0.

Check this transmission status in the ladder program as required.

TCP Socket No. (1 to 8): Number of Bytes Received (Ethernet Unit to CPU Unit)

	15	14	13	12	11	10	09	08	07	06	05	04	03	02	01	00
m+1 to m+8	Number of Bytes Received (0000 to 07C0 hex)															

For each TCP socket, the number of bytes of data in the reception buffer is stored in one word. A maximum of 4,096 bytes of data can be held in the reception buffer, but a value of only up to the maximum value (1,984 bytes) that can be set for receive requests by manipulating control bits or using CMND(490) is stored.

0000 hex: 0 bytes

07C0 hex: 1,984 bytes

The Data Received Flag in the CIO Area turns ON and OFF linked to this word. This area is given a value of 0000 hex when a receive request is executed by manipulating control bits or using the CMND(490) instruction. If any data remains in the reception buffer after the receive request processing is completed, the remaining number of bytes is stored and the Data Received Flag turns ON again.

Before a receive request is executed, a check is performed to confirm that the required data is available.

TCP Socket No. (1 to 8): Connection Status (Ethernet Unit to CPU Unit)

	15	14	13	12	11	10	09	08	07	06	05	04	03	02	01	00
m+9 to m+16	—	—	—	—	—	—	—	—	—	—	—	—	TCP connection status			

The connection status for each TCP socket is stored by code in this word. For details, refer to *Appendix C TCP Status Transitions*.

Socket Services Parameter Area 1 to 8 (Ethernet Unit to CPU Unit)

Offset	Socket No. 1	...	Socket No. 8	15 14 13 12 11 10 09 08	07 06 05 04 03 02 01 00
+0	m+18	···	m+88	Socket option	UDP/TCP socket number (1 to 8)
+1	m+19		m+89	Local UDP/TCP port number (0000 to FFFF Hex)	
+2	m+20		m+90	Remote IP address (00000000 to FFFFFFFF Hex)	
	m+21		m+91		
+4	m+22	···	m+92	Remote UDP/TCP port number (0000 to FFFF Hex)	
+5	m+23		m+93	Number of send/receive bytes (0000 to 07C0 Hex (1984))	
+6	m+24		m+94	Send/receive data address (Same as FINS variable area designation method.)	
	m+25		m+95		
+8	m+26		m+96	Timeout value (0000 to FFFF Hex)	
+9	m+27	···	m+97	Response code	

When socket services are requested by control bit manipulation, the settings must be made in advance in a Socket Service Parameter Area. The parameters used will vary depending on the service requested. For details, refer to *Operation Manual, Construction of Applications, SECTION 6*.

IP Address Display/Setting Area

	15 14 13 12	11 10 09 08	07 06 05 04	03 02 01 00
m+98	(1)	(2)	(3)	(4)
m+99	(5)	(6)	(7)	(8)

IP address: (1)(2).(3)(4).(5)(6).(7)(8) (Hex)

If the local IP address in the CPU Bus Unit System Setup is set to a value other than 0.0.0.0, this area (words m+98 and m+99) will act as an IP Address Display Area and the local IP address set in the CPU Bus Unit System Setup will be read and stored here when the power is turned ON or the Unit restarted. If the local IP address in the CPU Bus Unit System Setup is set to 0.0.0.0 (the default setting), this value is read by the Ethernet Unit when the power is turned ON or the Unit restarted and is used as the local IP address.

Note Choose the method used to set the local IP address as follows:

Set the local IP address in the CPU Bus Unit System Setup when making other settings in the CPU Bus Unit System Setup. The settings are made with CX-Programmer.

Set the local IP address in the allocated words in the DM Area when using the CPU Bus Unit System Setup at its default settings (i.e., for simple operation). The setting is usually made with a Programming Console.

Application	Setting device	Setting area	Remarks
Simple operation (i.e., The CPU Unit Bus System Setup is used at its default settings. Only the IP address is set.)	Programming Console (CX-Programmer can also be used.)	Allocated words in the DM Area	The setting in the allocated words in the DM Area is enabled only when the IP address in the CPU Unit Bus System Setup is set to 0.0.0.0. If the IP address in the CPU Unit Bus System Setup is set to a value other than 00.00.00.00, this value is stored in the allocated words in the DM Area.
Operation with the CPU Unit Bus System Setup set as desired (i.e., The default settings are not used.)	CX-Programmer	CPU Unit Bus System Setup	The IP address set in the CPU Unit Bus System Setup is stored in the allocated words in the DM Area.
Replacing the previous CS1W-ETN01/CS1W-ETN11 and using the previous settings.	---	---	The IP address is set using a rotary switch in the previous CS1W-ETN01/CS1W-ETN11 Ethernet Units. In the new Ethernet Units, the IP address set with the rotary switch is displayed in the DM Area. This area is backed up by the battery, so the IP address can be used without resetting.

Note

(1) If a value other than 00.00.00.00 is set as the local IP address in the CPU Bus Unit System Setup, even if an IP address is set in the allocated words in the DM Area, it will be overwritten with the setting in the CPU Bus Unit System Setup.

(2) It is not possible to set the following IP addresses. If any of these values are set, the ERH indicator will flash.

- IP addresses where all network number bits are 0 or 1.
- IP addresses where all host number bits are 0 or 1.
- IP addresses where all subnet number bits are 1.
- IP addresses that start with 127 (7F hexadecimal, e.g., 127.35.21.16).

4-3 Auxiliary Area Data

The following table and descriptions cover the words and bits in the Auxiliary Area of PLC memory that are related to the Ethernet Unit.

Read-only Bits/Words

Word(s)	Bit(s)	Name	Function	Settings
A202	A202.00 to A202.07	Communications Port Enabled Flags	Bits A202.00 to A202.07 turn ON when a network instruction (SEND, RECV, CMND, or PMCR) can be executed with the corresponding port number. Bits 00 to 07 correspond to communications ports 0 to 7.	0: Network communications running 1: No network communications running
A203 to A210	---	Communications Port Completion Codes	These words contain the completion codes for the corresponding port numbers when network instructions (SEND, RECV, CMND, or PMCR) have been executed. Words A203 to A210 correspond to communications ports 0 to 7.	0000: No error Not 0000: Error code
A219	A219.00 to A219.07	Communications Port Error Flags	Bits A219.00 to A219.07 turn ON when an error occurred during execution of a network instruction (SEND, RECV, CMND, or PMCR). Bits 00 to 07 correspond to communications ports 0 to 7.	0: Normal end 1: Error end
A302	A302.00 to A302.15	CPU Bus Unit Initializing Flags	Bits A302.00 through A302.15 turn ON while the corresponding CPU Bus Units (Units #0 through #15, respectively) are initializing. The bits will turn ON either when power is turned ON or when a CPU Bus Unit Restart Bit (A501.00 to A501.15) is turned ON.	0: Not initializing 1: Initializing (System will automatically turn the flag OFF when initialization has been completed.)
A402	A402.03	CPU Bus Unit Setting Error Flag (Non-fatal error)	Bit A402.03 is turned ON when the CPU Bus Units actually installed differ from the Units registered in the I/O tables. The ERR/ALM indicator on the front of the CPU Unit will flash, but CPU operation will continue. The unit number of the CPU Bus Unit involved is stored in word A427.	0: No setting error 1: Setting error
	A402.07	CPU Bus Unit Error Flag (Non-fatal error)	Bit A402.07 is turned ON when an error occurs during the transmission of data between the CPU and CPU Bus Units. The ERR/ALM indicator on the front of the CPU Unit will flash, but CPU operation will continue. The Unit where the error occurred will stop. The unit number of the CPU Bus Unit involved is stored in word A422.	0: No unit number error 1: Unit number error
A403	A403.00 to A403.08	Memory Error Location	When a memory error occurs, the Memory Error Flag (A401.15) is turned ON and one of the following flags is turned ON to indicate the memory area where the error occurred. A403.00: User program A403.04: PLC Setup A403.05: Registered I/O Tables A403.07: Routing Table A403.08: CPU Bus Unit Settings The ERR/ALM indicator on the front of the CPU Unit will light and CPU operation will stop.	0: Normal 1: Error
A410	A410.00 to A410.15	CPU Bus Unit Number Duplication Flags	The Duplication Error Flag (A401.13) and the corresponding flag in A410 will be turned ON when a CPU Bus Unit's unit number has been duplicated. Bits 00 to 15 correspond to unit numbers 0 to F. The ERR/ALM indicator on the front of the CPU Unit will light and CPU operation will stop.	0: No duplication 1: Duplication

Word(s)	Bit(s)	Name	Function	Settings
A417	A417.00 to A417.15	CPU Bus Unit Error, Unit Number Flags	When an error occurs in a data exchange between the CPU Unit and a CPU Bus Unit, the CPU Bus Unit Error Flag (A402.07) and the corresponding flag in A417 are turned ON. Bits 00 to 15 correspond to unit numbers 0 to F. The ERR/ALM indicator on the front of the CPU Unit will flash, but CPU operation will continue.	0: No error 1: Error
A427	A427.00 to A427.15	CPU Bus Unit Setting Error, Unit Number Flags	When a CPU Bus Unit Setting Error occurs, A402.03 and the corresponding flag in A27 are turned ON. Bits 00 to 15 correspond to unit numbers 0 to F. The ERR/ALM indicator on the front of the CPU Unit will flash, but CPU operation will continue.	0: No setting error 1: Setting error

Read/Write Bits (User Settings)

Word	Bits	Name	Description	Settings
A501	A501.00 to A501.15	CPU Bus Unit Restart Bits	Bits A501.00 through A501.15 can be turned ON to reset CPU Bus Units number #0 through #15, respectively. The Restart Bits are turned OFF automatically when restarting is completed. The CPU Bus Unit Initializing Flags (A302.00 to A302.15) will turn ON when initialization of the Units begins and turn OFF when it is completed.	OFF to ON: Unit restarted. Automatically turned OFF by system after restart processing has been completed.

SECTION 5
Determining IP Addresses

This section explains how to manage and use IP addresses.

5-1 IP Addresses 94
- 5-1-1 IP Address Configuration 94
- 5-1-2 Allocating IP Addresses 94
- 5-1-3 Ethernet Unit IP Address Settings 95
- 5-1-4 Subnet Masks 95

5-2 IP Addresses in FINS Communications 96
- 5-2-1 Specifying Nodes in FINS Communications Services 96
- 5-2-2 Pairing Addresses in Internal Tables 98
- 5-2-3 Application Examples. 105
- 5-2-4 Related Products and Communications/Setting Methods. 106
- 5-2-5 Pairing IP Addresses and FINS Node Addresses 108

5-3 Private and Global Addresses 108
- 5-3-1 Private and Global Addresses 108
- 5-3-2 Using a Private Address for the Ethernet Unit 110
- 5-3-3 Ethernet Unit with a Global Address 112

5-1 IP Addresses

Ethernet networks use IP addresses for communications. IP addresses identify both the Ethernet network and the node (host computer, Ethernet Unit, etc.). IP addresses must be set and controlled so that they are not duplicated.

5-1-1 IP Address Configuration

IP addresses are made up of 32 bits of binary data divided into four 8-bit fields called octets. These four octets provide the network number (net ID) and host number (host ID). The network number identifies the network, and the host number identifies the node (or host) on the network.

The network numbers in an IP address are divided into three classes, A, B, and C, so that the address system can be selected according to the scale of the network. (Classes D and E are not used.) The configuration of the IP address for each of these classes is shown in the following diagram.

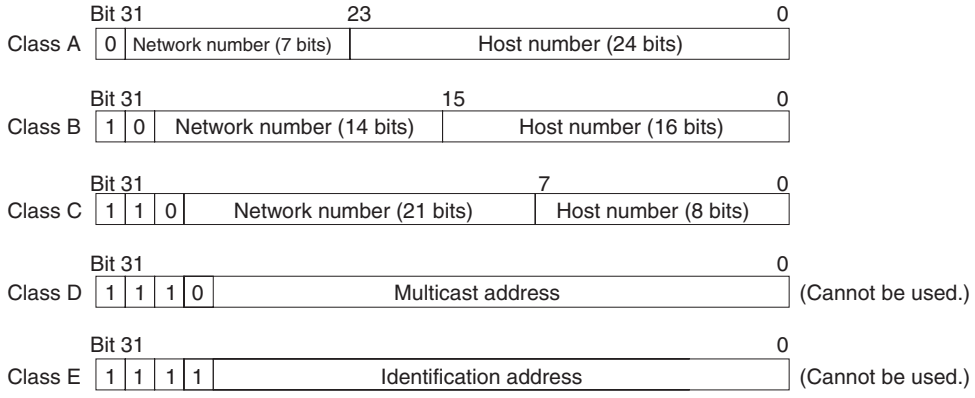

The number of networks in each class and the number of nodes possible on the network differ according to the class.

Class	Number of networks	Number of hosts
Class A	Small	2^{24}–2 max. (16,777,214 max.)
Class B	Medium	2^{16}–2 max. (65,534 max.)
Class C	Large	2^{8}–2 max. (254 max.)

The 32 bits of an IP address are divided into four sections of eight bits each, and expressed as a punctuated number. IP addresses are represented by the decimal equivalent of each of the four octets in the 32-bit address, each separated by a period. For example, the binary address 10000010 00111010 00010001 00100000 would be represented as 130.58.17.32.

Note The same network number must be set for every node on the same Ethernet network.

5-1-2 Allocating IP Addresses

IP (Internet Protocol) is a standard communications protocol used throughout the world, and is designed to enable communications between any Ethernet nodes regardless of the networks on which they exist. To achieve this, network numbers are allocated by the Network Solutions, InterNIC Registration Services, to ensure that all Ethernet networks have unique numbers regardless of where they exist. The local system administrator is left the responsibility of allocating unique host numbers locally. You therefore should obtain a network number from the InterNIC Registration Services to ensure uniqueness and allow for future network expansions if required.

5-1-3 Ethernet Unit IP Address Settings

An IP address must be set even for the Ethernet Unit before Ethernet communications can proceed. Either use the default for the Ethernet Unit's IP address, or else use a peripheral device to set it in the DM Area words allocated to the Unit as a CPU Bus Unit or in the CPU Bus Unit System Setup. For details, refer to *2-7 Unit Setup Procedure*.

5-1-4 Subnet Masks

Operation and management of a network can become very difficult if too many nodes are connected on a single network. In such a case it can be helpful to configure the system so that a single network is divided up into several subnetworks. This can be done by using part of the host number as a subnet number. Internally the network can be treated as a number of subnetworks, but from the outside it acts as a single network and uses only a single network ID.

To establish subnetworks, the host ID in the IP address is divided into a subnet ID and a host ID by using a setting called the subnet mask. The subnet mask indicates which part of the host ID is to be used as the subnet ID. All bits in the subnet mask that correspond to the bits in the IP address used either as the network ID or subnet ID are set to “1,” and the remaining bits, which correspond to the bits in the IP address actually used for the host ID, are set to “0.”

The following example shows the subnet mask for an 8-bit subnet ID used in a class-B IP address.

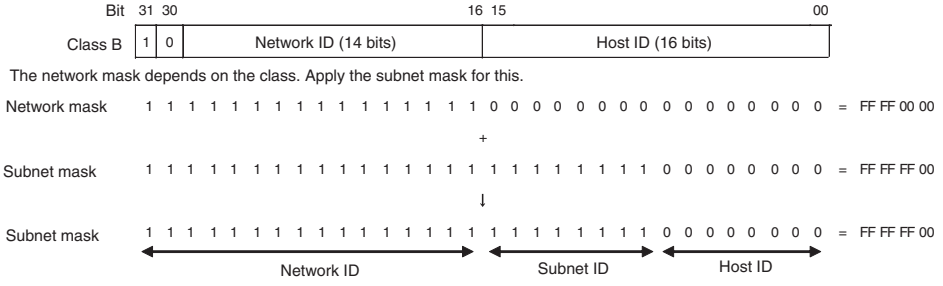

Set the same subnet mask value for all of the nodes on that subnetwork.
If a subnet mask is not set (default setting of 0.0.0.0) or if an illegal value is set, the following subnet mask values will be used depending on the class of the local IP address.

Class	Subnet mask value
Class A	255.0.0.0
Class B	255.255.0.0
Class C	255.255.255.0

If classes are normally used, it is recommended to set subnet mask values corresponding to the class.

5-1-5 CIDR

Starting with unit version 1.5, it is possible to use CIDR by selecting the CIDR option. CIDR stands for “classless inter-domain routing,” which allows allocating IP addresses without using classes. An IP address that uses a class has the disadvantage of inefficient allocation of IP address space (i.e., number of hosts) because the IP address is divided into block units with a network ID

component and host ID component. Because CIDR does not use a class, it is possible to divide the IP address space as desired, which enables efficient use of IP address space (i.e., number of hosts). For example, it is possible to build a horizontally distributed network exceeding 254 nodes by setting a network mask using CIDR even if class C (192.168, . . .) is used.

Subnet mask range
192.0.0.0 to 255.255.255.252

5-2 IP Addresses in FINS Communications

5-2-1 Specifying Nodes in FINS Communications Services

With FINS communications services on an Ethernet network, IP addresses, UDP port numbers, and TCP port numbers are paired with FINS node addresses to specify nodes on the network.

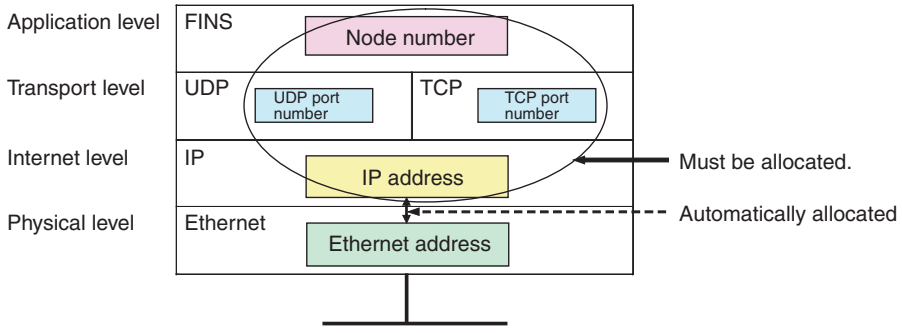

Note Use the “Node No.” rotary switch on the front of the Ethernet Unit to set the FINS node address.

Allocating Addresses to Ethernet Units

Ethernet Unit FINS Message Reception

The IP address, FINS/UDP port number, and FINS/TCP port number set for the Ethernet Unit are mainly used when receiving FINS communications messages.

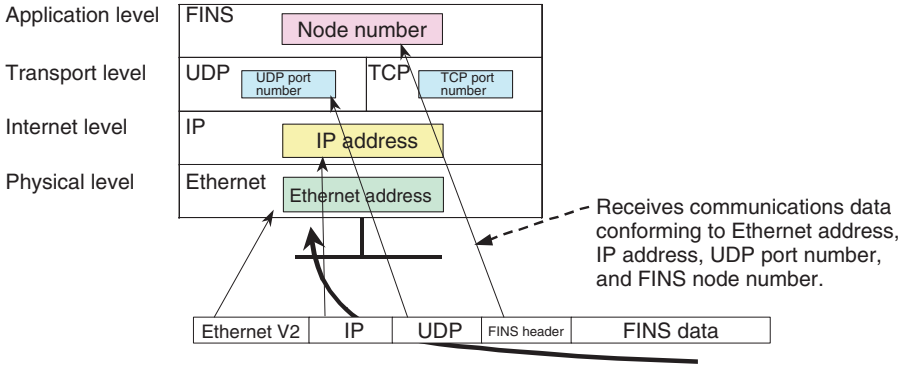

- Ethernet address: A fixed number is assigned to each Ethernet Unit and it cannot be changed.
- IP address: Either use the default IP address (192.168.250.*FINS_node number*), or set the address in the word allocated in the DM Area or in the Unit Setup from the CX-Programmer.

- FINS/UDP port number: Either use the default FINS/UDP port number (9600) or set the number using the CX-Programmer's Unit Setup.
- FINS/TCP port number: Either use the default FINS/TCP port number (9600) or set the number using the CX-Programmer's Unit Setup.
- FINS node address: Set the number using the NODE NO. rotary switch on the front of the Ethernet Unit.

Pairing IP Addresses with FINS Node Addresses at Local Nodes

A particular IP address is allocated to each communications node, including Ethernet Units. The IP address must be paired with the FINS node address (1 to 254) by one of the following methods.

Automatic Generation Method (Dynamic/Static)

Set the relation between the IP address and the FINS node address for the Ethernet Unit according to the following equation. If the setting does not conform to this equation, a setting error will be generated and the ERH indicator will flash.

FINS node address = IP address host number

IP Address Table Method and Combined Method

With these methods, the IP address and the FINS node address for the Ethernet Unit have no particular relationship. Set both the FINS node address and the IP address so that they are not duplicated in the network.

Sending Ethernet Unit FINS Messages

When the Ethernet Unit sends a FINS message, it must determine the remote node's IP address, UDP port number, and TCP port number. The relationships between all addresses, such as remote FINS node addresses and IP addresses, are managed by an internal table at the Ethernet Unit.

Remote FINS node address	Remote IP address (Example)	Connection	Remote port number (Example)
1	192.168.250.1	UDP	9600
2	192.168.250.2	UDP	9600
to			
254	192.168.250.254	UDP	9600

When the Ethernet Unit is turned ON or restarted, the internal table is generated automatically from the various settings that have been made. Depending on the setting method used, data such as remote IP addresses are changed dynamically. (Dynamic changes can be prohibited.)

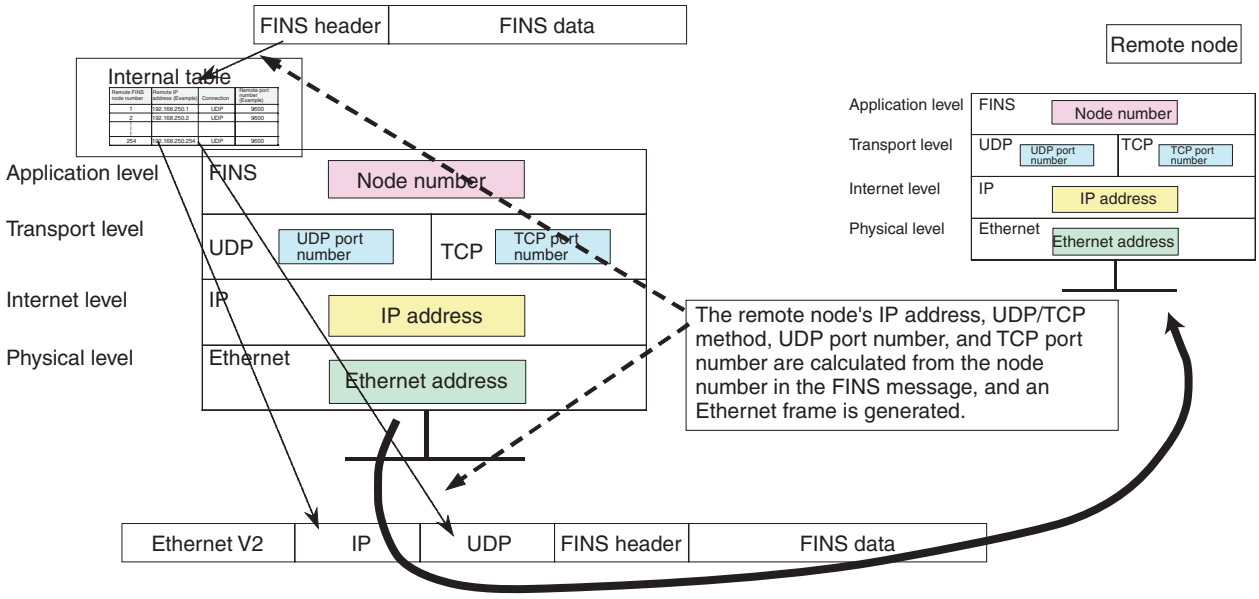

5-2-2 Pairing Addresses in Internal Tables

FINS/UDP Communications Methods

Automatic Generation (Dynamic)

When the Ethernet Unit is turned ON or restarted, the following values are set for addresses in the internal table.

- Remote IP address: Local IP address network number + remote FINS node address
- Remote UDP port number: UDP port number set for local Unit
- Connection method: FINS/UDP

With the dynamic method, data in an internal table that has been generated can be dynamically converted according to FINS messages received from remote nodes. This is enabled when the remote node is a device such as a personal computer and IP addresses are dynamically changed by a method such as DHCP.

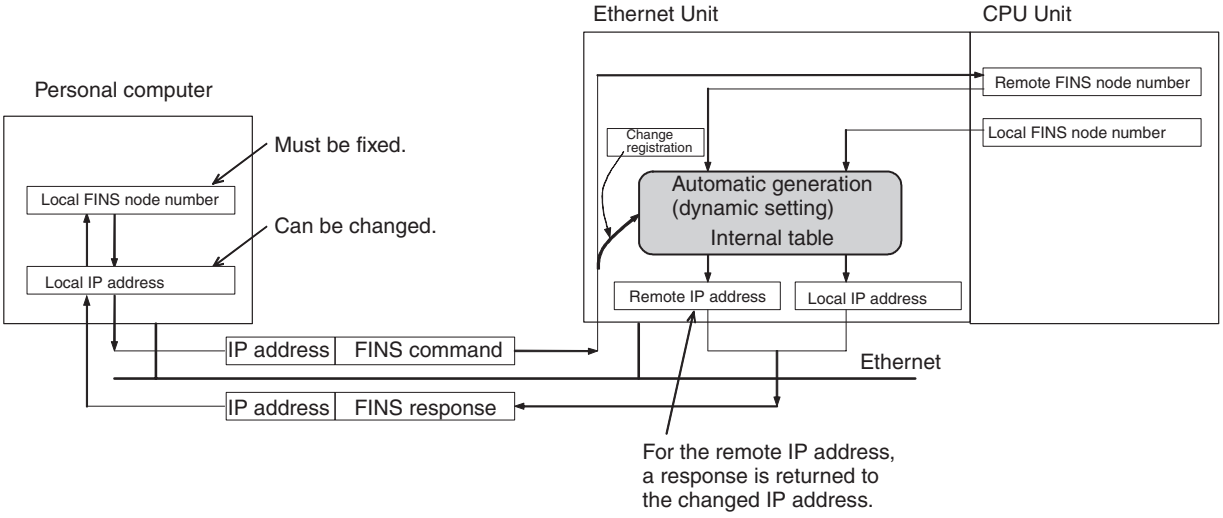

Automatic Generation (Static)

With the static method as well, the following values are set for addresses in the internal table when the Ethernet Unit is turned ON or restarted.

- Remote IP address: Local IP address network number + remote FINS node address
- Remote UDP port number: UDP port number set for local Unit
- Connection method: FINS/UDP

With the static method, however, data in an internal table that has been generated is not freely changed.

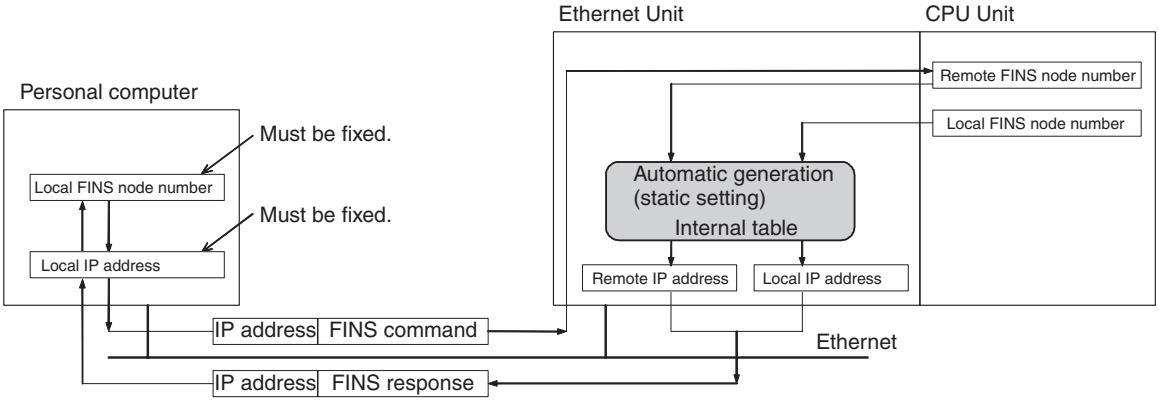

IP Address Table Method

With this method, FINS node addresses are converted to IP addresses based on a correspondence table (IP address table) that is preset in the Unit setup.

The IP address table is set using the CX-Programmer in *IP Address Table* under *Settings* in the Unit Setup. It can be registered for nodes in different segments and with different network numbers.

The internal table will be as follows:

- FINS Node Address Registered to IP Address Table
  The following address is registered to the internal table.
  - Remote IP address: IP address registered to IP address table
  - Remote UDP port number: UDP port number set for local Unit
  - Connection method: FINS/UDP
- FINS Node Address Not Registered to IP Address Table
  The following address is registered to the internal table.
  - Remote IP address: 0.0.0.0
  - Remote UDP port number: UDP port number set for local Unit
  - Connection method: FINS/UDP

With the IP address table method, records of FINS nodes registered to the IP address table are not changed dynamically. For all others node, the data from FINS nodes registered with a remote IP address of 0.0.0.0 can be dynamically changed when the Unit is turned ON or restarted, according to FINS messages received from remote nodes. This can be used effectively when the remote node is a device such as a personal computer and IP addresses are dynamically changed by a method such as DHCP.

Example

When FINS Command is Sent

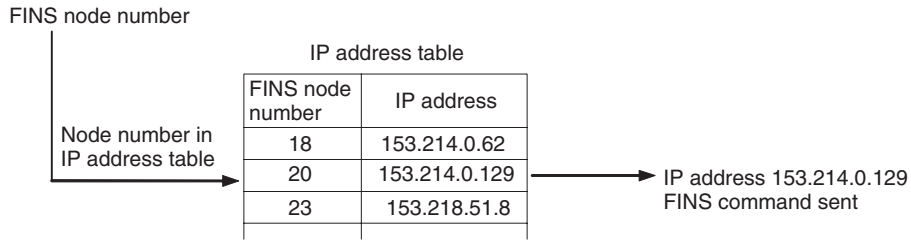

When FINS Command is Received

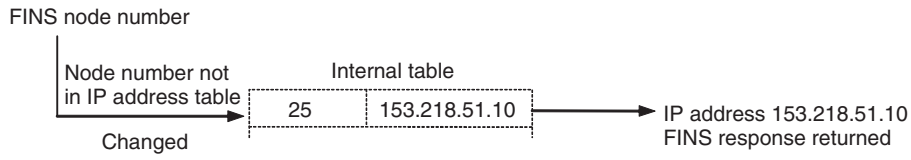

Combined Method

The combined method combines the IP address table method and the automatic generation method (dynamic).

First the IP address table is referenced. Then, if the applicable FINS node address is found, the corresponding IP address is read. If the FINS node address is not found, the IP address is calculated using the automatic generation method (dynamic).

The internal table will be as follows:

- FINS Node Address Registered to IP Address Table
  The following address is registered to the internal table.
  - Remote IP address: IP address registered to IP address table
  - Remote UDP port number: UDP port number set for local Unit
  - Connection method: FINS/UDP
- FINS Node Address Not Registered to IP Address Table
  The following address is registered to the internal table.
  - Remote IP address: Local IP address network number + FINS node address
  - Remote UDP port number: UDP port number set for local Unit
  - Connection method: FINS/UDP

With the combined method, records of FINS nodes registered to the IP address table are not dynamically changed. For all others nodes, the data from FINS nodes registered with a remote IP address of 0.0.0.0 can be dynamically changed when the Unit is turned ON or restarted, according to FINS messages received from remote nodes. This can be used effectively when the remote node is a device such as a personal computer and IP addresses are dynamically changed by a method such as DHCP.

Example

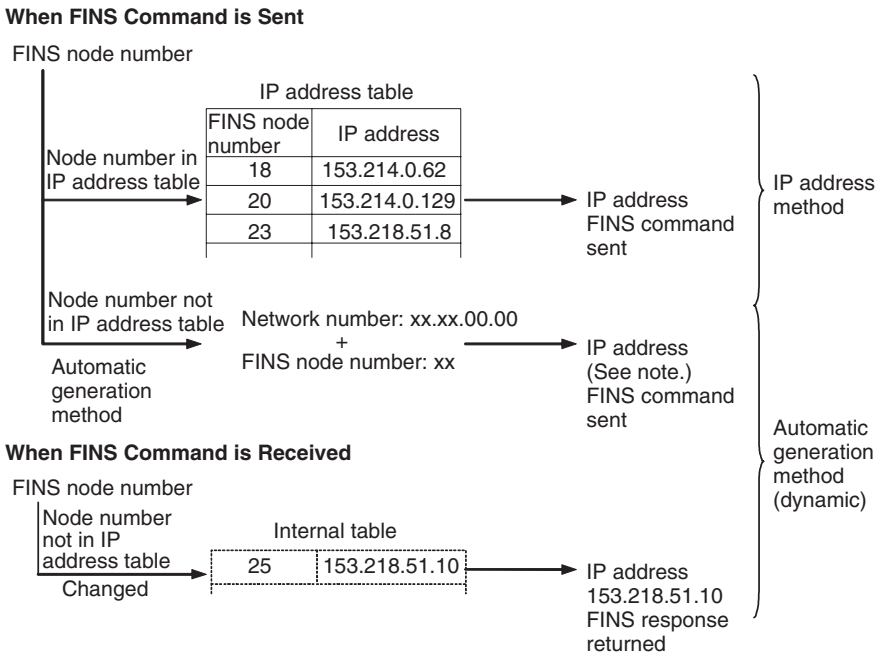

Note When an internal table IP address has been changed with the reception of a FINS command, this is sent to the IP address in the internal table.

Prohibiting Dynamically Changing Remote IP Addresses

For Ethernet Units with Unit Ver. 1.3 or later, methods used to dynamically change remote IP addresses (automatic generation, IP address table, or combined (mixed) method) can be prohibited (protected against). Use the CX-Programmer unit setting function (version 5.0 and higher) or Web function setting window to make this setting.

When dynamically changing remote (destination) IP addresses is prohibited, the internal table for each method is maintained in the state when the power was turned ON or restarted. Therefore, protection can be provided against access using FINS/UDP from personal computers or other devices that have dynamically changing IP addresses. To prohibit (protect from) dynamic changes, deselect the *Change Dynamically* option in the Setup Tab of the Unit Setup.

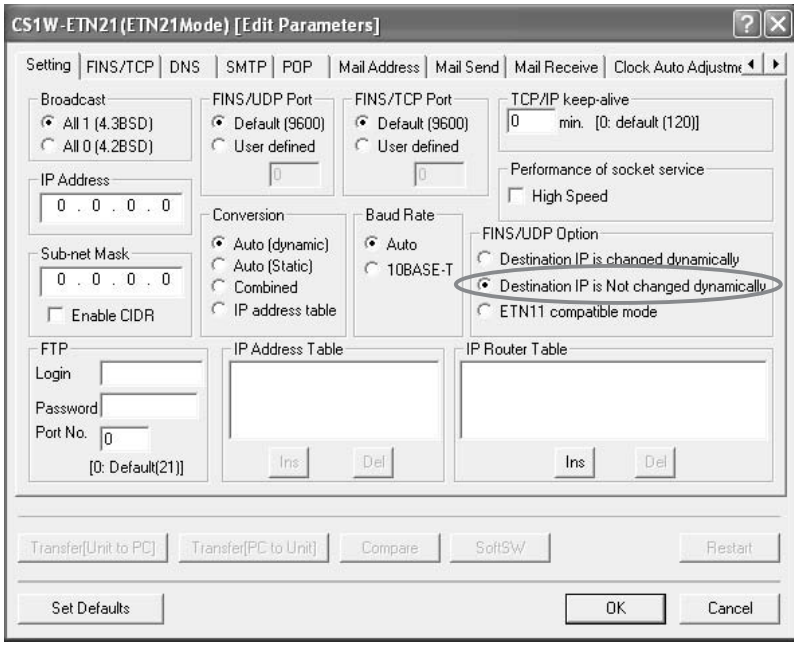

Using the ETN11-compatible Mode

For Ethernet Unit with unit version 1.4 or later, operating specifications can be made compatible with the CS1W-ETN11/CJ1W-ETN11 for all methods (automatic generation (dynamic), I/O address table, or combined). (Dynamic changes, however, are prohibited for the destination IP address in ETN11-compatible mode.) While in ETN11-compatible mode, the following operations will be performed the same as they are for the CS1W-ETN11/CJ1W-ETN11 for FINS/UDP command data sent from a UDP port number other than the local FINS/UDP port number (default: 9600) set in the Unit Setup Tab Page.

- If the command data is for the Ethernet Unit, a FINS response will be sent to the source UDP port number.
- If the command data is for any other Unit, such as the CPU Unit, a FINS response will be sent to the UDP port number set as the FINS/UDP port number.

The ETN11-compatible mode is set as follows using the Web function setting window.

1,2,3...

1. Connect to the Ethernet Unit from a Web browser and select Settings - 1. IP address and Protocols - System. The System Format will be displayed.
2. Select ETN11 compatible mode from the FINS/UDP option in the System Format, click the Set Button, click the Regist Button, and then turn the power supply OFF and ON or restart the Unit using a software restart.

Note

(1) If the ETN11-compatible mode is used, internal method tables will not be changed when the power supply is turned OFF and ON or software resets are executed. This provides protection from access via FINS/UDP from computers that dynamically change their IP address.

(2) The ETN11-compatible mode is not used for normal applications and should not be used in most cases.

FINS/TCP Communications Method

Pairing in the FINS/TCP Method

With the FINS/TCP method, communications are first established for each connection, and then remote FINS node addresses are mutually converted. (See note.) Then FINS message communications are executed. In this way, remote FINS node addresses and remote IP addresses are paired for each connection. Therefore, with the FINS/TCP method, there is no need to set IP address conversions (i.e., pairing FINS node addresses with IP addresses) as with FINS/UDP. All that is required is to use the CX-Programmer's Unit setup to set the remote IP address for each connection.

Note The internal table is changed after connections are established.

Internal Processing

The Ethernet Unit executes the following processing when the FINS/TCP method is used.

Local Device Is FINS/TCP Client

1,2,3...

1. Connections are established in TCP/IP protocol with the IP addresses set at the Unit (i.e., the IP address for each connection No.).
2. The remote node (i.e., the server) is notified of the FINS node address for the local device.
3. Notification is received from the remote node (i.e., the server) of the remote node's FINS node address.
4. The Ethernet Unit changes the internal table (FINS node address, IP address, and TCP port number).
5. FINS messages can then be sent and received.

Local Device Is a FINS/TCP Server

1,2,3...

1. A request to open a connection is received in TCP/IP protocol from the remote device (i.e., the client, either a personal computer or an Ethernet Unit), and the connection is established.
2. Notification is received from the remote node (i.e., the client) of the remote node's FINS node address.
3. The local device provides notification of the local FINS node address.
4. The Ethernet Unit changes the internal node correspondence table (FINS node address, IP address, and TCP port number).
5. FINS messages can then be sent and received.

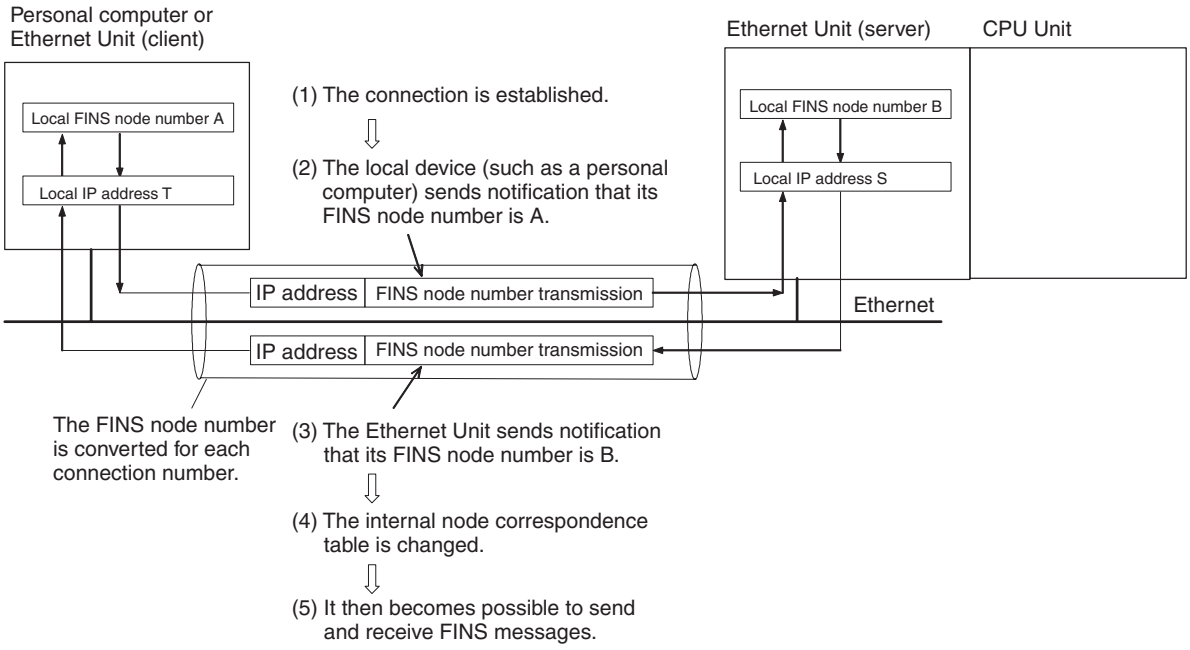

Setting FINS/TCP Connections

The procedure for setting FINS/TCP connections involves the items described below. The settings are made individually for each connection (numbers 1 to 16) under *FINS/TCP settings* in the Unit Setup.

Local Device Is Server

1,2,3...

1. Set the server.
2. Set IP addresses for connected devices.
   If the option for protection by IP addresses is checked, set the IP addresses for clients where connections are permitted. (This can be omitted.)
3. Automatic FINS node address allocation:
   If the client (generally a personal computer) supports FINS/TCP, and if it is to be used without setting a FINS node address, the value set here (from 239 to 254) can be allocated to the client.
   Functions related to these settings are explained in detail in the *Operation Manual Construction of Applications*, *SECTION 7 Using FINS Communications to Create Host Applications*. The default settings should normally be used.

Local Device Is a Client

1,2,3...

1. Set the client.
2. Set the IP addresses for the connection destination.
   Set the IP address for the remote Ethernet Unit (i.e., the server) connected by FINS/TCP.
   This setting must be made if this Ethernet Unit is to be used as a FINS/TCP client.

5-2-3 Application Examples

Responding to Computers with Changed IP Addresses

FINS/UDP Communications Method

With FINS/UDP, whether using the automatic conversion method (dynamic), the IP address table method, or the combined method, remote FINS node addresses and remote IP addresses in the internal table are changed after FINS messages are received. Therefore, even when a FINS command has been received from a personal computer (a DHCP client computer) for which the IP address is dynamically changed, a response can still be sent back to the computer (the DHCP client computer) from which the command originated.

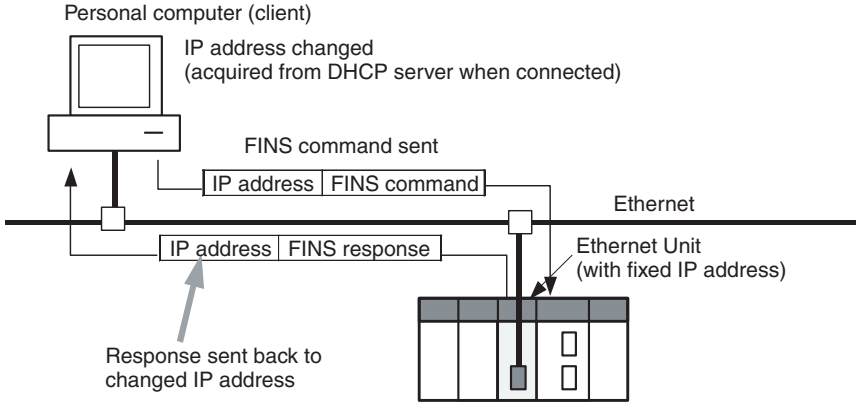

FINS/TCP Communications Method

With FINS/TCP, FINS node addresses and IP addresses in the internal table are changed with each connection that is established. Therefore, even when a FINS command has been received from a personal computer (a DHCP client computer) for which the IP address is dynamically changed, a response can still be sent back to the computer (the DHCP client computer) from which the command originated.

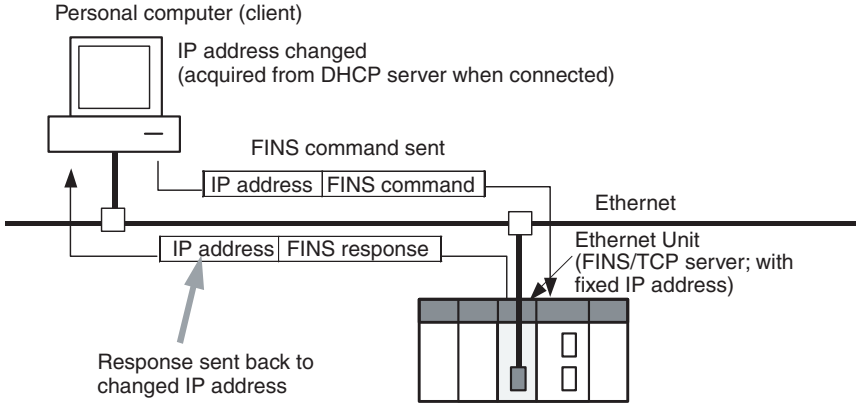

Note **Automatic IP Address Setting by DHCP Service**

DHCP service is a method whereby a DHCP server collectively manages all of the IP address in a network.

Nodes that are functioning as clients acquire IP addresses from the DHCP server whenever the system is started. Therefore, at a personal computer using the DHCP service, IP addresses may be different with each system startup.

DHCP service is mainly used for automatic settings in devices such as personal computers that are used for client applications. Nodes used for server

applications, such as mail servers, are normally allocated fixed IP addresses. Ethernet Units in PLC systems are also allocated fixed IP addresses.

Simultaneously Running Multiple Applications on a Personal Computer

In communications involving previous models, multiple communications applications were configured on personal computers according to data accessing uses, and the fact that no more than one UDP port number for FINS communications could be used on any given computer created a problem. This Ethernet Unit provides a practical solution with an internal table that pairs remote nodes (applications) with FINS node addresses, enabling dynamic changes.

FINS/UDP Communications Method

FINS nodes are allocated individually for each application on the computer, and the respective FINS/UDP port numbers that are used are also allocated individually. When FINS/UDP FINS commands are sent from individual applications to the Ethernet Unit, the respective remote IP addresses and remote port numbers in the internal table are dynamically changed.

FINS/TCP Communications Method

With this method as well, FINS nodes are allocated individually for each application on the computer, and the respective FINS/TCP port numbers that are used are also allocated individually. Each application is positioned with a FINS/TCP client, and requests the opening of a connection with the Ethernet Unit's FINS/TCP server. When the connection is established, the respective remote IP address and remote port number in the internal table are dynamically changed.

5-2-4 Related Products and Communications/Setting Methods

Models Supporting Automatic Generation Method (Dynamic)

Product		Model/Series/ Version	Supports automatic generation method (dynamic)?
CS-series Ethernet Unit	100BASE-TX	CS1W-ETN21	Yes
	10BASE-5	CS1W-ETN01	No: Set by automatic generation method or combined method. Communications are not possible with personal computers with variable IP addresses.
	10BASE-T	CS1W-ETN11	
CJ-series Ethernet Unit	100BASE-TX	CJ1W-ETN21	Yes
	10BASE-T	CJ1W-ETN11	No: Set by automatic generation method or combined method. Communications are not possible with personal computers with variable IP addresses.
CV/CVM1-series Ethernet Unit	10BASE-5	CV500-ETN01	
FinsGateway		Version 4.xx or lower	
		Version 2003 or higher	Yes
Programmable Terminal		NS Series	No: Set manually so that automatic settings can be used with the automatic generation method.
Open Network Controller (ONC)		---	

Models Supporting Automatic Generation Method (Static)

Product		Model/Series/ Version	Supports automatic generation method (static)?
CS-series Ethernet Unit	100BASE-TX	CS1W-ETN21	Yes
	10BASE-5	CS1W-ETN01	Yes: Simply called “automatic generation method.”
	10BASE-T	CS1W-ETN11	
CJ-series Ethernet Unit	100BASE-TX	CJ1W-ETN21	Yes
	10BASE-T	CJ1W-ETN11	Yes: Simply called “automatic generation method.”
CV/CVM1-series Ethernet Unit	10BASE-5	CV500-ETN01	
FinsGateway		Version 4.xx or lower	
		Version 2003 or higher	Yes
Programmable Terminal		NS Series	No: Set manually so that automatic settings can be used with the automatic generation method.
Open Network Controller (ONC)		---	

Models Supporting IP Address Table Method

Product		Model/Series/ Version	Supports IP address table method?
CS-series Ethernet Unit	100BASE-TX	CS1W-ETN21	Yes
	10BASE-5	CS1W-ETN01	
	10BASE-T	CS1W-ETN11	
CJ-series Ethernet Unit	100BASE-TX	CJ1W-ETN21	
	10BASE-T	CJ1W-ETN11	
CV/CVM1-series Ethernet Unit	10BASE-5	CV500-ETN01	
FinsGateway		Version 4.xx or lower	
		Version 2003 or higher	
Programmable Terminal		NS Series	No: Set manually. FINS communications are not possible with personal computers set automatically by DHCP.
Open Network Controller (ONC)		---	

Models that Can Use the Combined Method

Product		Model/Series/ Version	Supports combined method?
CS-series Ethernet Unit	100BASE-TX	CS1W-ETN21	Yes
	10BASE-5	CS1W-ETN01	No
	10BASE-T	CS1W-ETN11	No
CJ-series Ethernet Unit	100BASE-TX	CJ1W-ETN21	Yes
	10BASE-T	CJ1W-ETN11	No
CV/CVM1-series Ethernet Unit	10BASE-5	CV500-ETN01	No
FinsGateway		Version 4.xx or lower	No
		Version 2003 or higher	Yes

Product	Model/Series/ Version	Supports combined method?
Programmable Terminal	NS Series	No: Set manually. FINS communications are not possible with personal computers set automatically by DHCP.
Open Network Controller (ONC)	---	

5-2-5 Pairing IP Addresses and FINS Node Addresses

The following table shows the methods for pairing IP address and FINS node addresses, and the relation between fixed and variable address, for both FINS/UDP and FINS/TCP.

Communications method	Method of pairing of IP addresses and FINS node addresses	IP address determination		Client (personal computer of PLC)		Server (PLC)	
				FINS node address	IP address	FINS node address	IP address
FINS/UDP	By pairing FINS node addresses with IP addresses in Ethernet	IP address conversion	Automatic generation method (static)	Fixed	Fixed	Fixed	Fixed
			Automatic generation method (dynamic)	Fixed	Fixed or variable	Fixed	Fixed
			IP address table method	Fixed	Fixed or variable	Fixed	Fixed
			Combined method	Fixed	Fixed or variable	Fixed	Fixed
FINS/TCP	By automatic conversion of FINS node addresses at Ethernet Unit and remote node (and then sending and receiving data)	Automatic	Connection method (automatic FINS node address conversion)	Fixed or can be allocated automatically when not determined.	Fixed or variable	Fixed	Fixed

5-3 Private and Global Addresses

5-3-1 Private and Global Addresses

There are two kinds of IP addresses, private and global.

- Global addresses: These are IP addresses that connect directly to the Internet. Allocated by application to NIC, each address is unique in the world, and as many as 4.3 million can be allocated worldwide.
- Private addresses: These are IP addresses for Intranet (LAN) use, and cannot connect directly to the Internet. Frames that include private IP addresses are restricted by the router from being sent outside the LAN.

Generally, as shown below, global addresses in the intranet are allocated only to IP routers (such as broadband routers) interfacing with the Internet. All other nodes in the intranet, including the Ethernet Unit, are allocated private addresses.

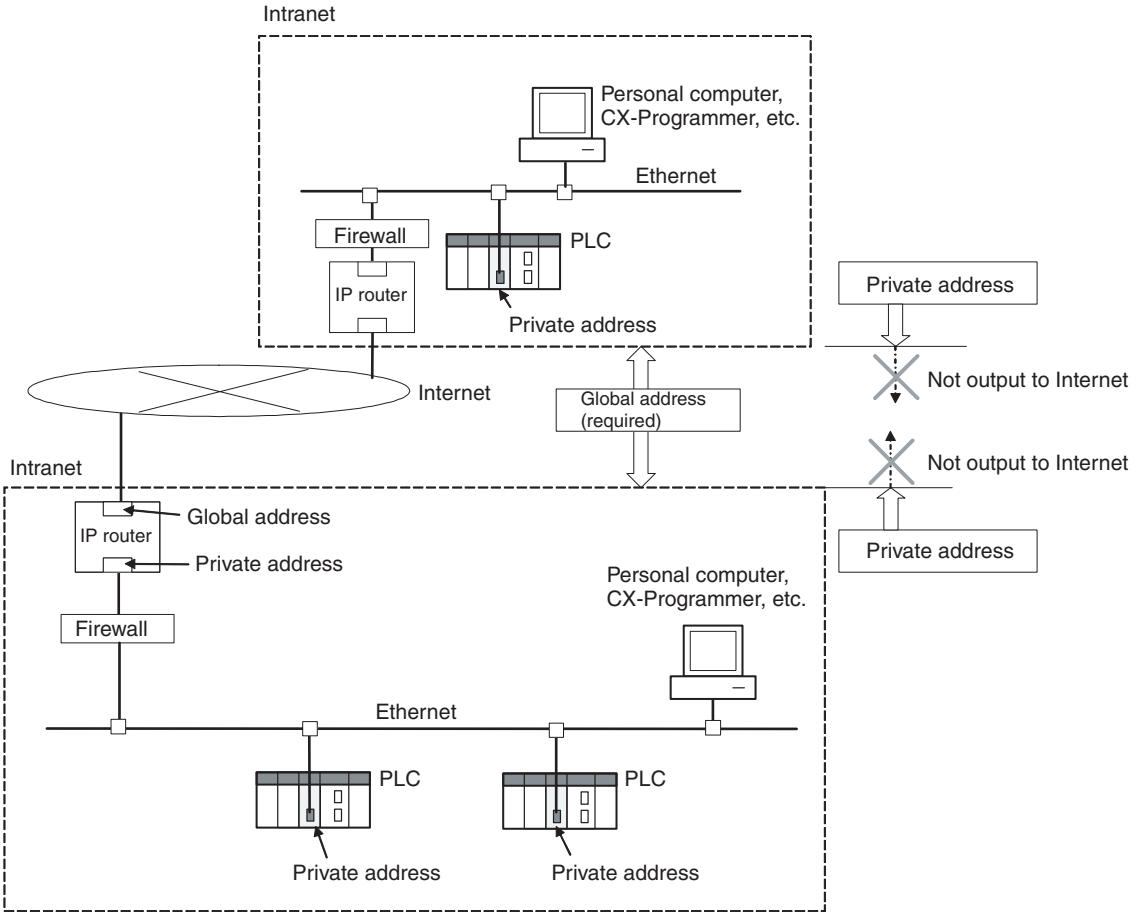

Communications Services That Require Global Addresses for Ethernet Units

A global address is required for the Ethernet Unit's IP address when the following communications services are used over the Internet.

- FINS communications services
- File transfers
- Socket services

When mail is sent or received over the Internet, the Unit's IP address can be a private address.

5-3-2 Using a Private Address for the Ethernet Unit

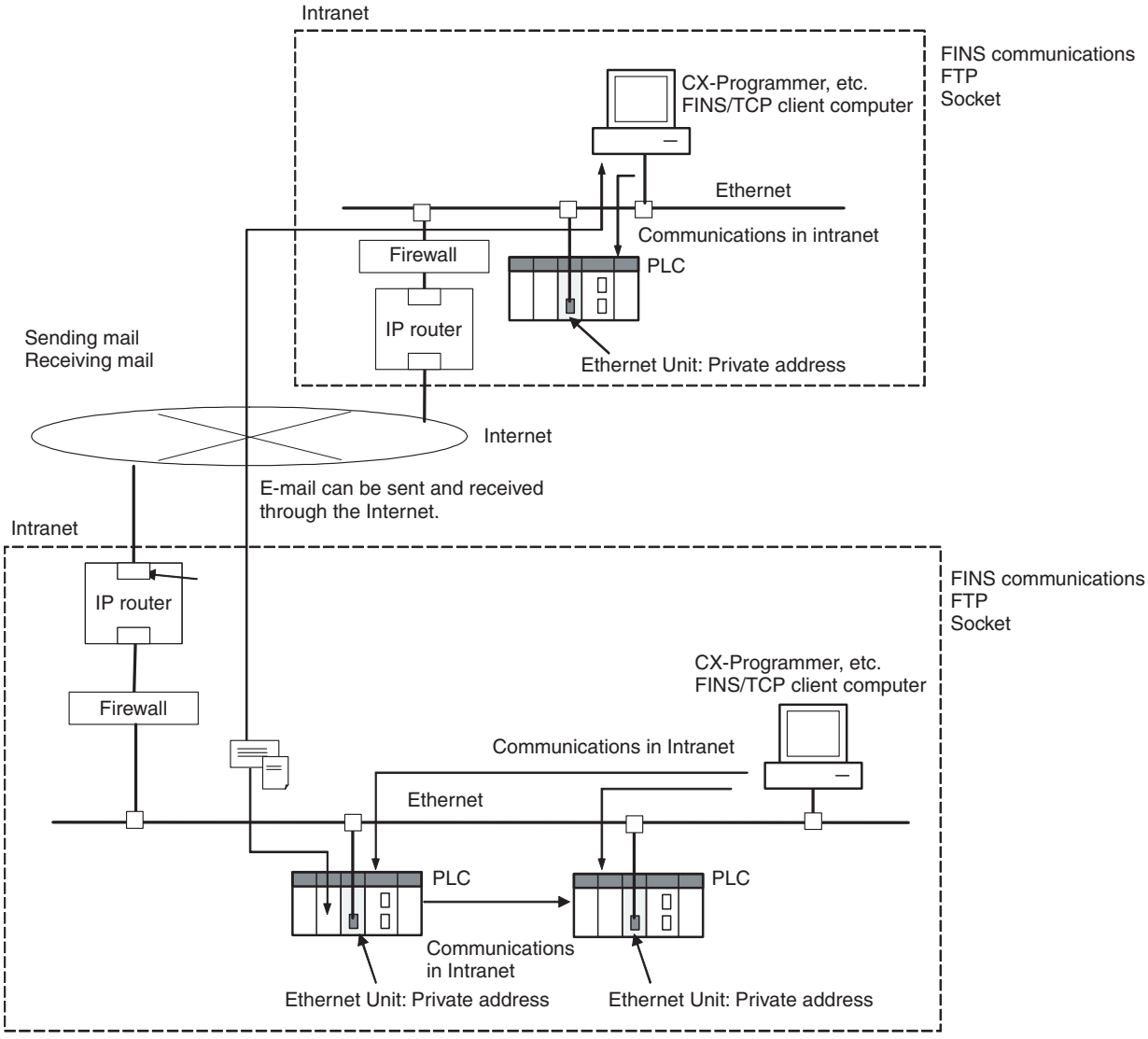

Conditions for Using Communications Applications

When the Ethernet Unit has a private address, communications applications can be used under the following conditions:

1,2,3... **1. FINS Communications Service**

- FINS communications service is enabled only between Ethernet Units with private addresses on the intranet.
  A device such as a personal computer (with a FINS application including a CX-Programmer) cannot connect online and communicate over the Internet with an Ethernet Unit that has a private address. FINS communications over the Internet are also not possible between Ethernet Units with private addresses.
- Either FINS/TCP or FINS/UDP can be used for the FINS communications service.
- With FINS/UDP, all of the Ethernet Unit IP address conversion methods can be used.

- With FINS/UDP, when the IP address (private address) of a computer serving as a DHCP client is changed, the Ethernet Unit's IP address conversion method will be the automatic generation method (dynamic), the combined method, or the IP address table method. When FINS/TCP is used, IP addresses can be changed automatically.

2. **Transferring Files**
   - Files can be transferred, using FTP protocol, between the PLC and a device such as a personal computer (i.e., an FTP client) with a private address on the intranet.
   - The TCP port number to be used for FTP cannot be used if prohibited by a firewall in the communications path.
3. **Sending Mail**

   The PLC can send the Ethernet Unit's IP address to the SMTP server by mail via the intranet.
4. **Receiving Mail**

   The PLC can receive the Ethernet Unit's IP address from the POP3 server by mail via the intranet.
5. **Automatic Clock Adjustment**

   The PLC can acquire clock data through the Ethernet Unit's IP address from the SNTP server via the intranet.
6. **Host Name Designation**

   The PLC can acquire the server IP address for the Ethernet Unit's IP address from the DNS server via the intranet.

Note **Network Security and Firewalls**

Setting up an intranet through a global address involves network security considerations. Before doing so, be sure to consult with a network specialist and consider installing a firewall.

Once a firewall has been set up by a communications company, on the other hand, there may be some applications that cannot be used. Be sure to check first with the communications company.

5-3-3 Ethernet Unit with a Global Address

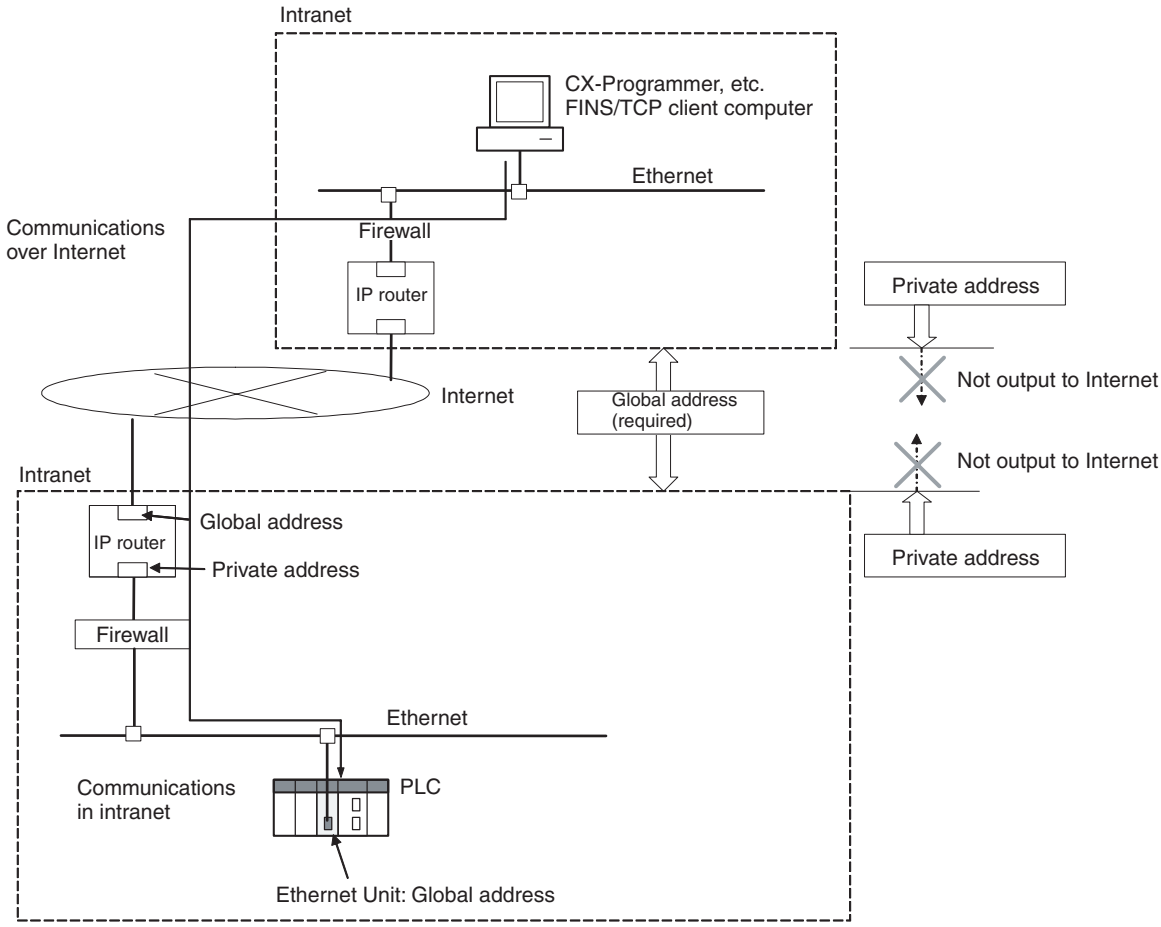

Conditions for Using Communications Applications

Communications applications can be used over the Internet under the following conditions:

1,2,3...

1. **FINS Communications Service**
   - A device such as a personal computer (with a FINS application including a CX-Programmer) can connect online and communicate over the Internet with an Ethernet Unit that has a global address.
   - FINS/TCP is recommended as the FINS communications service method.
     FINS/TCP is more reliable than FINS/UDP in terms of communications errors involving IP routers.
   - The IP address table method is used as the Ethernet Unit's IP address conversion method.
   - The TCP port number to be used for FINS/TCP cannot be used if prohibited by a firewall in the communications path.
2. **Transferring Files**
   - Files can be transferred over the Internet between a device such as a personal computer (i.e., an FTP client) and a PLC with an Ethernet Unit that has a global address.
   - The TCP port number to be used for FTP cannot be used if prohibited by a firewall in the communications path.

3. **Sending Mail**
   - The PLC can send the Ethernet Unit's IP address to the SMTP server by mail via the intranet, even if it as a private address.
   - The TCP port number (default: 25) to be used for SMTP cannot be used if prohibited by a firewall in the communications path. Also, with some communications companies, there may be restrictions, based on mail security considerations, on using POP before SMTP.
4. **Receiving Mail**
   - The PLC can receive the Ethernet Unit's IP address from the POP3 server by mail via the intranet, even if it as a private address.
   - The TCP port number (default: 110) to be used for POP3 cannot be used if prohibited by a firewall in the communications path.
5. **Automatic Clock Adjustment**
   - The PLC can acquire clock data through the Ethernet Unit's IP address from the SNTP server via the intranet, even if it is a private address.
   - The TCP port number (default: 123) to be used for SNTP cannot be used if prohibited by a firewall in the communications path.
6. **Host Name Designation**
   - The PLC can acquire the server IP address for the Ethernet Unit's IP address from the DNS server via the intranet, even if Ethernet Unit's IP address is a private address.
   - The UDP/TCP port number (default: 53) to be used for DNS cannot be used if prohibited by a firewall in the communications path.

Note **Network Security and Firewalls**

Setting a global IP address for an Ethernet Unit involves network security considerations. It is recommended that the user contract with a communications company for a dedicated line, rather than using a general line such as a blue band. Also, be sure to consult with a network specialist and consider security measures such as a firewall.

Once a firewall has been set up by a communications company, on the other hand, there may be some applications that cannot be used. Be sure to check first with the communications company.

SECTION 6
FINS Communications

This section provides information on communicating on Ethernet Systems and interconnected networks using FINS commands. The information provided in the section deals only with FINS communications in reference to Ethernet Units.

FINS commands issued from a PLC are sent via the SEND(090), RECV(098), and CMND(490) instructions programmed into the user ladder-diagram program. Although an outline of these instructions is provided in this section, refer to the *CS/CJ-series Programmable Controllers Programming Manual* (W340) for further details on programming these instructions.

6-1 Overview of FINS Communications 116
- 6-1-1 Communications On an Ethernet Network 116
- 6-1-2 Using the FINS/UDP and FINS/TCP Methods 116
- 6-1-3 FINS Communications Service Specifications for Ethernet 117

6-2 FINS/UDP Method 118
- 6-2-1 Overview 118

6-3 FINS/TCP Method 120
- 6-3-1 Overview 120

6-4 Creating Routing Tables 124
- 6-4-1 Routing Table Overview 124
- 6-4-2 Connecting and Using a Peripheral Device for the PLC 125
- 6-4-3 Routing Table Setting Examples 126

6-5 Using FINS Applications 128
- 6-5-1 CX-Programmer (CX-Server) 128
- 6-5-2 FinsGateway 132

6-6 Communicating between OMRON PLCs 137
- 6-6-1 Communications Specifications 137
- 6-6-2 PLC Communications Data Areas 138
- 6-6-3 Using SEND(090), RECV(098), and CMND(490) 139
- 6-6-4 Writing Programs 143
- 6-6-5 Program Example 147
- 6-6-6 Transmission Delays 149

6-7 Precautions on High Traffic in FINS Communications 155

6-1 Overview of FINS Communications

6-1-1 Communications On an Ethernet Network

Data is sent and received as UDP/IP packets or TCP/IP packets on an Ethernet network.

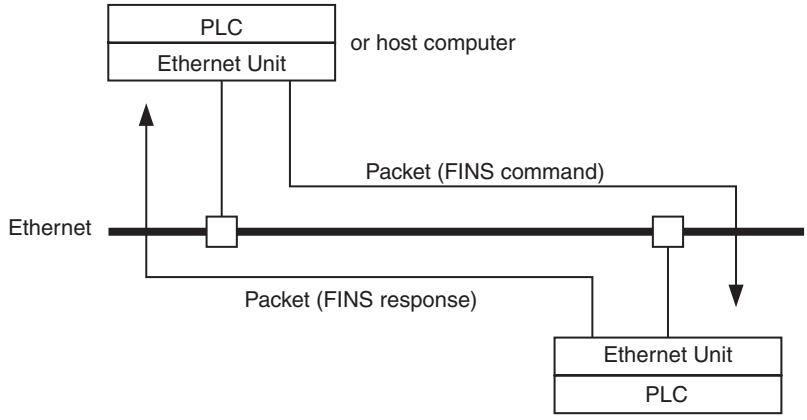

In the FINS communications service, both an IP address for IP (the Internet layer) and a FINS node address for FINS (the application layer) are used for the remote device. Also, 9600 is used as the default setting for the local UDP or TCP port number (i.e., the transport layer) for identifying the application layer, i.e., the FINS communications service. (Another number can be set for the FINS/UDP port from the Setup Tab in the Unit Setup.)

For details on pairing FINS node addresses with IP addresses and UDP/TCP port numbers, refer to *5-2 IP Addresses in FINS Communications*.

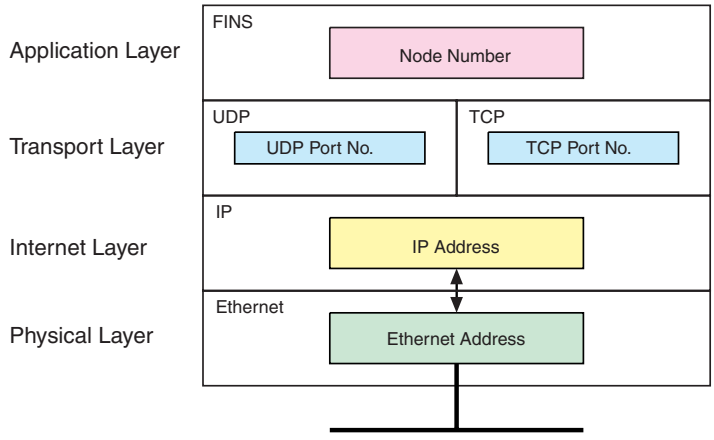

The FINS communications service is a communications method based on UDP/IP, and it is supported by most OMRON Ethernet-related products. (In this manual it is called the FINS/UDP method.) In addition to supporting the FINS/UDP method, the CS1W-ETN21 and CJ1W-ETN21 support FINS communications using TCP/IP. (In this manual, this is called the FINS/TCP method.)

6-1-2 Using the FINS/UDP and FINS/TCP Methods

It is recommended that FINS/UDP and FINS/TCP be used as follows:

- When remote devices do not support the FINS/TCP method:
  Use the FINS/UDP method for FINS communications with those devices.

- When FINS nodes are connected on the same Ethernet segment:
  Use the FINS/UDP method between those nodes.

  Note FINS/UDP offers a slight advantage in performance.
- When FINS nodes are connected over multiple IP network layers:
  Use the FINS/TCP method between those nodes.

  Note FINS/TCP offers superior communications quality.
- When the quality of connections is unreliable, as with wireless LAN:
  Use the FINS/TCP method between those nodes.

  Note FINS/TCP offers superior communications quality.

6-1-3 FINS Communications Service Specifications for Ethernet

Item	Specifications	
Number of nodes	254	
Message length	2,012 bytes max.	
Number of buffers	192	
Protocol name	FINS/UDP method	FINS/TCP method
Protocol used	UDP/IP	TCP/IP
	The selection of UDP/IP or TCP/IP is made by means of the FINS/TCP Tab in the CX-Programmer's Unit Setup.	
Number of connections	---	16
Port number	9600 (default) Can be changed.	9600 (default) Can be changed.
Protection	No	Yes (Specification of client IP addresses when Unit is used as a server)
Other	Items set for each UDP port • Broadcast • IP address conversion	Items set for each connection • Server/client specification • Remote IP address specification When client: Specify remote Ethernet Unit (server) IP address. When server: Specify IP addresses of clients permitted to connect. • Automatic FINS node address allocation: Specify automatic allocation of client FINS node addresses. • Keep-alive: Specify whether remote node keep-alive is to be used. TCP/IP Setting • Remote node keep-alive time
Internal table	This a table of correspondences for remote FINS node addresses, remote IP addresses, TCP/UDP, and remote port numbers. It is created automatically when power is turned ON to the PLC or when the Ethernet Unit is restarted, and it is automatically changed when a connection is established by means of the FINS/TCP method or when a FINS command received. The following functions are enabled by using this table. • IP address conversion using the FINS/UDP method • Automatic FINS node address conversion after a connection is established using the FINS/TCP method • Automatic client FINS node address allocation using the FINS/TCP method • Simultaneous connection of multiple FINS applications	

6-2 FINS/UDP Method

6-2-1 Overview

FINS/UDP Features

The FINS/UDP method is a FINS communications method that uses the UDP/IP protocol. UDP/IP is a connectionless communications protocol. When a message is sent from one node to another, the two nodes have an equal relationship and there is no clear connection. If using TCP is like making a telephone call, then UDP is more like delivering a memo by hand. Although the UDP protocol is fast, data communications are less reliable than with TCP.

In particular, when sending large amounts of data involving significant routing, the user must program measures, such as retries, into applications in order to improve reliability.

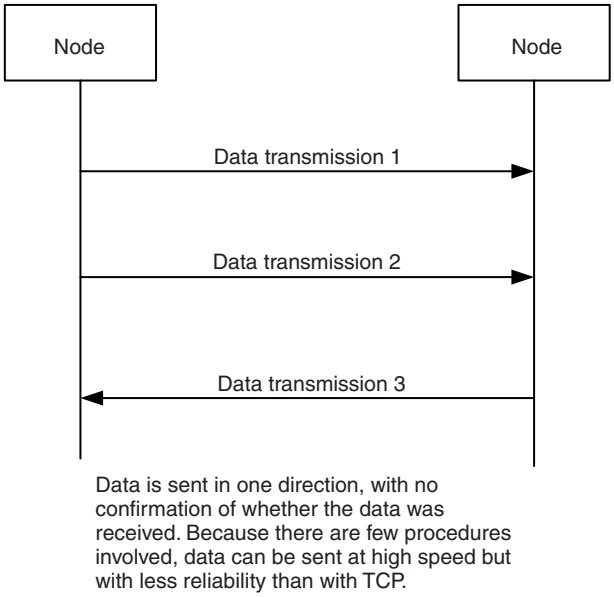

The FINS/UDP method has the following features:

- Because FINS/UDP is a connectionless protocol, there is no limit to the number of corrections.
- FINS/UDP can be used for broadcasting.
- When data is sent via an IP network with multiple layers (such as the Internet), communications reliability drops.

FINS/UDP Frame Format

The following diagram shows the structure of a UDP packet used for sending and receiving data on an Ethernet network.

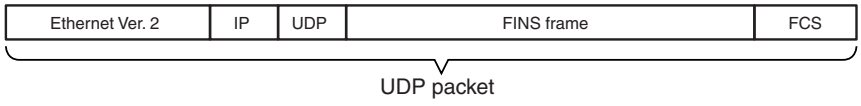

As the diagram shows, a nested structure is used with the FINS/UDP method, i.e., Ethernet Ver. 2, IP frame, UDP frame, and FINS frame. A UDP data section (FINS frame) that exceeds 1,472 bytes is split into packets for transmission. The split UDP data is then joined automatically at the UDP/IP protocol layer. There is normally no need to pay attention at the application layer to this split, but it may not be possible to send 1,472-byte UDP packets over an IP network with multiple layers. When using the FINS communications service in a system such as this, select the FINS/TCP method.

UDP Port Numbers for FINS/UDP

The UDP port number is the number for UDP to identify the application layer (i.e., the FINS communications service in this case). When communications are executed by UDP/IP, this port number must be allocated to the communications service.

The default setting for the FINS/UDP local UDP port number (i.e., the Ethernet Unit's UDP port number) is 9600. To set another number, make the setting for the FINS/UDP port using the Setup Tab in the Unit Setup.

At the Ethernet Unit, a UDP/IP frame received with a FINS/UDP port number is recognized as a FINS frame.

Procedure for Using FINS/UDP

1. Make the basic settings.
   Refer to *SECTION 2 Startup Procedure* in the *Operation Manual Construction of Networks*.

↓

2. Make the settings in the Unit Setup.
   With the CX-Programmer connected online, select the Ethernet Unit in the CX-Programmer's I/O Table Window. Right-click, and select Unit Setup. Then make the following settings in the Unit Setup Window.
   Setup Tab
   - Broadcast
   - FINS/UDP port (Default: 9600)
   - IP address table (for the IP address table method only)

↓

3. Make the routing table settings and transfer them to each PLC. (See note.)
   Set the routing tables with CX-Integrator, and transfer it to each PLC.

↓

4. Create a ladder program that includes the SEND(090), RECV(098), and CMND(490) instructions.

Note Routing tables are required in the following situations:

- When communicating with a PLC or computer on another network (e.g., remote programming or monitoring using FINS messages or a CX-Programmer).
- When multiple Communications Units are mounted to a single PLC (i.e., CPU Unit).
- When routing tables are used for one or more other nodes on the same network.

It is not necessary to set routing tables if one Communications Unit is mounted to the PLC and the nodes are connected as one network.

6-3 FINS/TCP Method

6-3-1 Overview

FINS/TCP Features

The FINS/TCP method is a FINS communications method that uses the TCP/IP protocol. TCP/IP is a connection-type communications protocol. Before a message is sent from one node to another, it is necessary to establish a virtual circuit, i.e., a connection. Once a connection has been established, communications are quite reliable. The arrival of data that is sent via the connection is confirmed by an acknowledgement (ACK) response, and retries are executed automatically as required.

The FINS/TCP method has been newly added to the CS1W-ETN21 and CJ1W-ETN21 Ethernet Units. When FINS/TCP is used, it must be determined which node is the server and which is the client.

For communications between a personal computer and a PLC, the computer should normally be set as the client and the PLC as the server. For communications between two PLCs, either one can be set as the client and the other as the server.

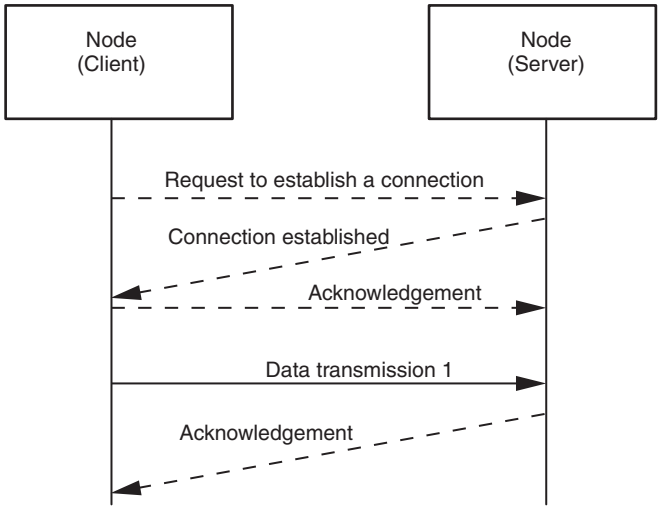

An acknowledgement is received whenever a connection is established or data is sent, so transmissions are more reliable but somewhat slower.

Compared to the FINS/UDP method, the FINS/TCP method has the following characteristics.

- Data transmission is more reliable, due to factors such as retry processing at the TCP/IP layer. The FINS/TCP method is thus better suited to dealing with communications errors in an IP network that spans several layers.
- Remote clients can be restricted by means of settings at the server (i.e., the server can be protected from access by non-specified IP addresses).
- Broadcasting cannot be used.
- TCP/IP has various retry procedures, and this tends to lower its performance in comparison with UDP/IP.
- There is a limit to the number of connections that can be made (i.e., 16 connections maximum), and any given node can communicate only with up to 16 other nodes at a time.

- Once a FINS/TCP connection (connection number, remote IP address) has been set in the Unit Setup, it can be dynamically changed from the ladder program using a FINS command (i.e., FINS/TCP CONNECTION REMOTE NODE CHANGE REQUEST).

FINS/TCP Frame Format

The following diagram shows the structure of a TCP packet sent over an Ethernet network.

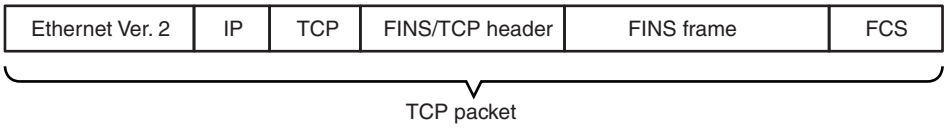

As the diagram shows, a nested structure is used with the FINS/TCP method, i.e., Ethernet Ver. 2, IP frame, TCP frame, FINS/TCP header frame, and FINS frame. A TCP data section (FINS/TCP header + FINS frame) that exceeds the segment size (default: 1,024 bytes, with automatic adjustment for optimum values between the nodes) is split into TCP packets for transmission. The split TCP data is then joined automatically at the remote node's TCP/IP protocol layer. The TCP/IP protocol layer, however, cannot determine where the data has been split, so the TCP data sections from multiple packets are all joined together. Therefore, when using the FINS/TCP method, FINS/TCP headers must be added at the beginning of FINS frames in order to serve as FINS frame delimiters. The length of the data in the following FINS frame is stored in the header, allowing the frame to be separated out by the remote node. With the Ethernet Unit and FinsGateway Ver. 2003 the appropriate frames are separated out automatically, so there is normally no need to be pay attention to it at the application layer.

TCP Port Number for FINS/TCP

The TCP port number is the number for TCP to identify the application layer (i.e., the FINS communications service in this case). When communications are executed using TCP/IP, this port number must be allocated for the communications service.

The default setting for the FINS/TCP local TCP port number (i.e., the Ethernet Unit's TCP port number) is 9600. To set another number, make the setting for the FINS/TCP port using the Setup Tab in the Unit Setup.

The FINS/TCP port number set in the Unit Setup is used by the FINS/TCP server's TCP socket. The FINS/TCP client's TCP socket uses any TCP port number that can be used at that node. (With the Ethernet Unit and FinsGateway Ver. 2003, an unused TCP port is automatically detected and utilized.)

At the Ethernet Unit, a TCP/IP frame that is received is recognized as a FINS frame, according to the remote TCP port number in the frame.

FINS/TCP Connection Numbers

FINS/TCP allows up to 16 FINS/TCP connections to be established simultaneously, and these 16 connections are managed at the Ethernet Unit by connection numbers. When setting connections by means of the FINS/TCP settings in the CX-Programmer's Unit Setup, set them individually using these connection numbers.

FINS/TCP Connection Status (Word n+23)

While a connection with a remote node is established, the bit corresponding to the FINS/TCP connection status turns ON in the section of the CPU Bus Unit words allocated in the CIO Area. The bit turns OFF if the connection is terminated by a communications error or a FINS command (i.e., FINS/TCP CONNECTION REMOTE NODE CHANGE REQUEST).

	15	14	13	12	11	10	09	08	07	06	05	04	03	02	01	00
n+23																

*: Bit 15 corresponds to connection No. 16, bit 00 to connection No. 1, etc.

FINS/TCP Communications Procedure

With FINS/TCP, FINS node addresses are exchanged immediately after a connection is established. This makes it possible to determine the FINS node addresses to which the 16 connection numbers, and to manage them in an internal table.

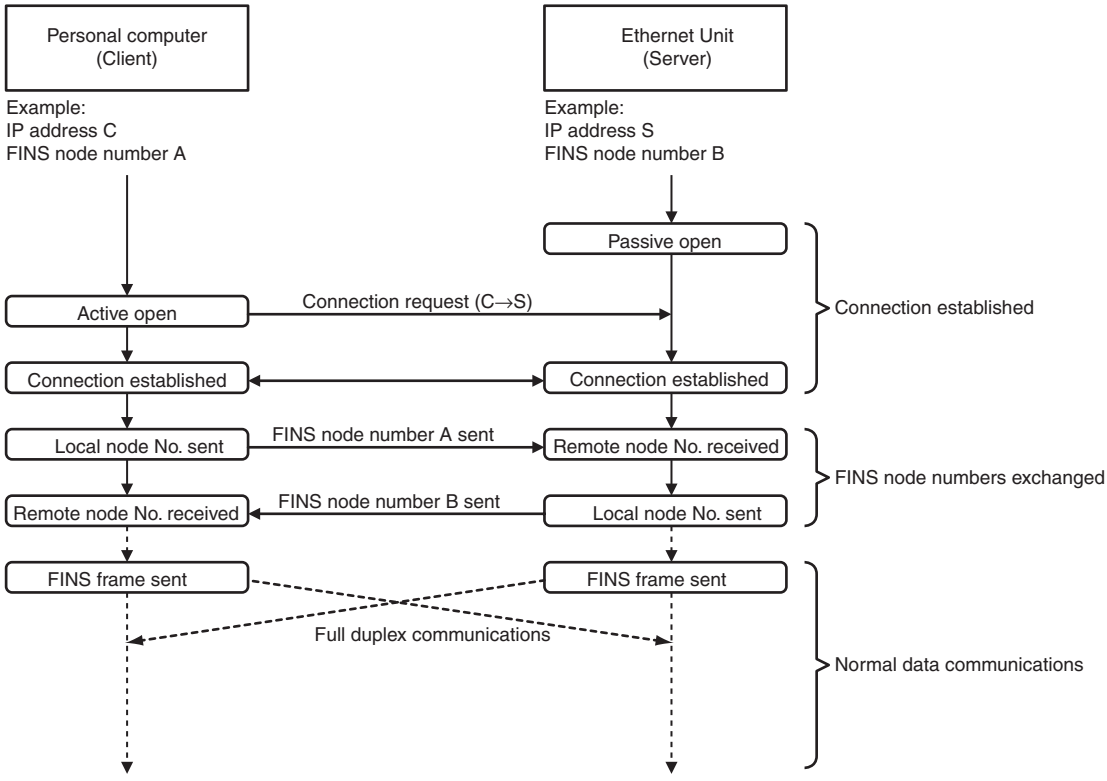

After a connection has been established as a FINS/TCP server, it is terminated in the following ways.

- When the connection is closed by the client.
- When a FINS command to close the connection (FINS/TCP CONNECTION REMOTE NODE CHANGE REQUEST) is sent by the client.
- When there is no response from the client when the keep-alive function is in effect.

After a connection has been established as a FINS/TCP client, it can be terminated in the following ways.

- If the connection is closed by the server.
- If there is no response from the client when the keep-alive function is in effect.

Even if the connection is closed at the FINS/TCP client, requests continue to be made to the FINS/TCP server every few seconds to open a connection.

Note After the Ethernet Unit is powered up or restarted, the IP address for the connection used as the FINS/TCP client is the remote IP address set under the FINS/TCP Tab in the Unit Setup.
To dynamically change the remote IP address (i.e., during CPU Unit operation), execute the CMND(490) instruction in the ladder program and send a FINS command (FINS/TCP CONNECTION REMOTE NODE CHANGE REQUEST; command code: 27 30 hexadecimal) to the Ethernet Unit.

Procedure for Using FINS/TCP

1. Make the basic settings.

   Refer to *Section 2 Startup Procedure* in the *Operation Manual Construction of Networks*.

   ↓

2. Make the settings in the Unit Setup.
   With the CX-Programmer connected online, select the Ethernet Unit in the CX-Programmer's I/O Table Window. Right-click, and select Unit Setup. Then make the following settings in the Unit Setup Window.

   Setup Tab

   • FINS/TCP port (Default: 9600)

   FINS/TCP Tab

   • Remote IP addresses (when client)

   Note: When functioning as a server, set the permitted client IP addresses only when protection is in effect.

   • Automatically allocated FINS node addresses

   Note: The functions of these items are described in detail in the *Operation Manual Construction of Applications, SECTION 7 Using FINS Communications to Create Host Applications.* Normally the defaults should be used.

   • Keep-alive setting

   Note: Normally this should be selected to be used.

   • IP addresses protection setting

   Note: Check this only for protection as the server.

   ↓

3. Make the routing table settings and transfer them to each PLC. (See note.)
   Set the routing tables with CX-Integrator, and transfer it to each PLC.

   ↓

4. Create a ladder program that includes the SEND(090), RECV(098), and CMND(490) instructions.

Note Routing tables are required in the following situations:

- When communicating with a PLC or computer on another network (e.g., remote programming or monitoring using FINS messages or a CX-Programmer)
- When multiple Communications Units are mounted to a single PLC (i.e., CPU Unit)
- When routing tables are used for one or more other nodes on the same network

It is not necessary to set routing tables if one Communications Unit is mounted to the PLC and the nodes are connected as one network.

6-4 Creating Routing Tables

When the FINS communications service is used, routing tables must be created in advance. Routing tables are required in the following circumstances.

- When communicating with a PLC or computer on another network (e.g., remote programming or monitoring using FINS messages or a CX-Programmer)
- When multiple Communications Units are mounted to a single PLC (i.e., CPU Unit).
- When routing tables are used for one or more other nodes on the same network.

It is not necessary to set routing tables if one Communications Unit is mounted to the PLC and the nodes are connected as one network. The routing tables are required not only for nodes communicating via the FINS communications service but also for all relay nodes on the network.

6-4-1 Routing Table Overview

The routing tables describe the transmission path for FINS messages when the FINS communications are used. It consists of two tables: A local network table and a relay network table.

Local Network Table

The local network table is a table describing the correspondences among unit numbers of the Communications Units and Boards mounted to each node.

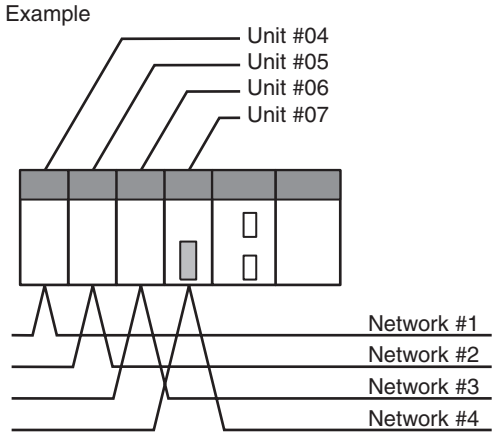

Local Network Table

Local network address	Unit number
1	04
2	05
3	06
4	07

Note

1. The unit number is set (0 to F: 1 to 15) by the rotary switch on the front of the Ethernet Unit.
2. The network address is the number of the network (1 to 127) to which the Communications Unit or Board is connected. It is set when the local network table is created.

Relay Network Table

A relay table is a table that shows the nodes to which data should be sent first in order to send data to a network that is not connected to the local node. It shows the correspondence between the address of the final destination network, and the network address and node address of the first relay point of the path to reach there. When internetwork communications are carried out, the end network can be reached by following the relay points.

The following example shows routing tables for sending data from PLC #1 (the local node: network address 1, node address 1) to PLC #4 (the destination node: network address 3, node address 2).

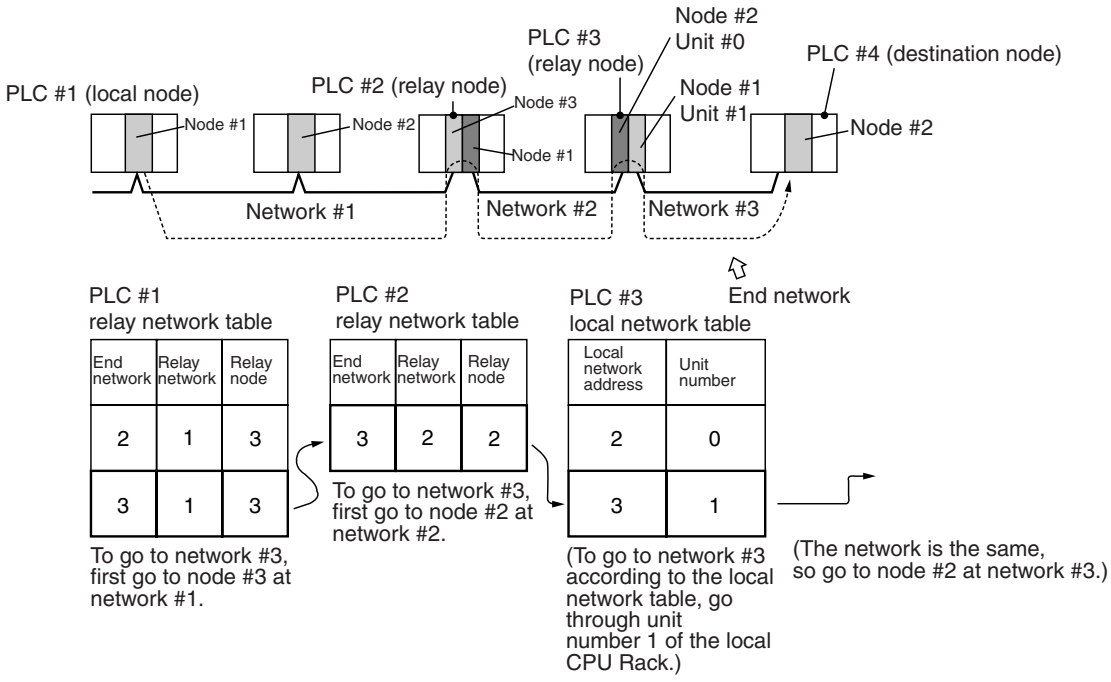

Note In the above example, the routing tables required for a message to reach PLC #4 from PLC #1 are shown. Additional settings would be required in the routing tables for a message to reach PLC #1 from PLC #4. Refer to *6-4-3 Routing Table Setting Examples* for routing table setting examples.

6-4-2 Connecting and Using a Peripheral Device for the PLC

Routing tables must be created by a CX-Integrator connected to the PLC. (They cannot be created using a Programming Console.) For details on how to connect and use the CX-Integrator, refer to the *CX-Integrator Operation Manual* (W445). (CX-Integrator is automatically installed when CX-One is installed.)

Note

1. When routing tables are transferred from the CX-Integrator to the PLC, the CPU Bus Unit is reset so that the routing tables that have been created can be read and enabled. Before transferring the routing tables, make sure that the devices in the system will not be adversely affected by resetting the CPU Bus Unit.
2. To transfer routing tables for multiple nodes to a PLC in one batch, connect the CX-Integrator to a PLC with only one Communications Unit mounted. Routing tables cannot be transferred to other nodes from a PLC with multiple Communications Units mounted.
3. Routing tables can only be transferred as a batch to multiple nodes within the same network as the PLC to which the CX-Integrator is connected.

6-4-3 Routing Table Setting Examples

■ Example 1: Local Network Table for a PLC With Multiple Units Mounted

This example shows the local network table settings for a PLC to which multiple CPU Bus Units are mounted.

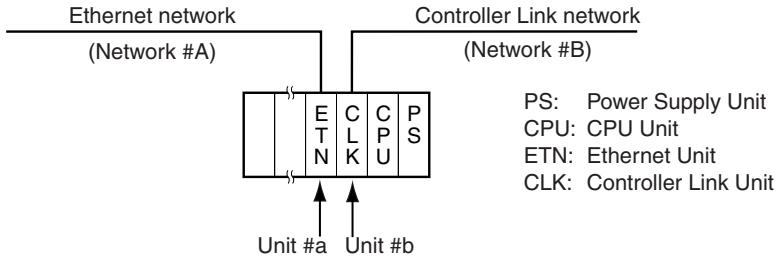

Local Network Table

No.	Local network	CPU Bus Unit
1	A	a
2	B	b

■ Example 2: Three Interconnected Networks

This example shows the relay network table settings for three different interconnected networks.

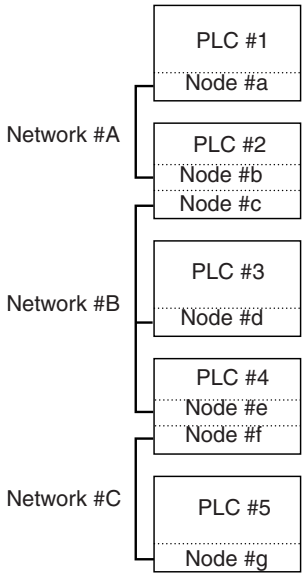

Relay Network Table

No.	End network	Relay network	Node
1	B	A	b
2	C	A	b
1	C	B	e
1	A	B	c
2	C	B	e
1	A	B	c
1	A	C	f
2	B	C	f

In the table for PLC #3, for example, if network #A is taken as the end network, then network #B becomes the relay network and node #c becomes the relay node. If network #C is taken as the end network, then network #B still becomes the relay network and node #e becomes the relay node.

■ Example 3: All Nodes

This example uses the following configuration to show the routing tables for all nodes.

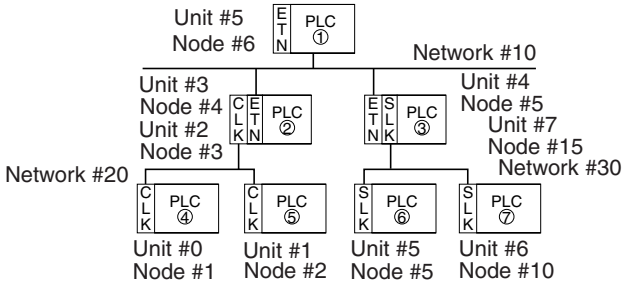

PLC #1 Routing Table

(Local network table)

No.	Local network	CPU Bus Unit No.
1	010	05
2		
3		

(Relay network table)

No	End network	Relay network	Relay node
1	020	010	004
2	030	010	005
3			

PLC #2 Routing Table

(Local network table)

No.	Local network	CPU Bus Unit No.
1	010	03
2	020	02
3		

(Relay network table)

No	End network	Relay network	Relay node
1	030	010	005
2			
3			

PLC #3 Routing Table

(Local network table)

No.	Local network	CPU Bus Unit No.
1	010	04
2	030	07
3		

(Relay network table)

No.	End network	Relay network	Relay node
1	020	010	004
2			
3			

PLC #4 Routing Table

(Local network table)

No.	Local network	CPU Bus Unit No.
1	020	00
2		
3		

(Relay network table)

No.	End network	Relay network	Relay node
1	010	020	003
2	030	020	003
3			

PLC #5 Routing Table

(Local network table)

No.	Local network	CPU Bus Unit No.
1	020	01
2		
3		

(Relay network table)

No.	End network	Relay network	Relay node
1	010	020	003
2	030	020	003
3			

PLC #6 Routing Table

(Local network table)

No.	Local network	CPU Bus Unit No.
1	030	05
2		
3		

(Relay network table)

No.	End network	Relay network	Relay node
1	010	030	015
2	020	030	015
3			

PLC #7 Routing Table

(Local network table)

No.	Local network	CPU Bus Unit No.
1	030	06
2		
3		

(Relay network table)

No.	End network	Relay network	Relay node
1	010	030	015
2	020	030	015
3			

6-5 Using FINS Applications

6-5-1 CX-Programmer (CX-Server)

The following examples show how to connect online from a CX-Programmer on an Ethernet network to a PLC on the Ethernet network.

■ System Configuration Example 1: No Routing

In this example, an online connection is made by FINS/UDP to a PLC on an Ethernet network (PLC1 in the diagram below) from a CX-Programmer or CX-Integrator connected to the Ethernet network.

Conditions

- FINS/UDP method
- IP address conversion: Automatic generation method (dynamic)

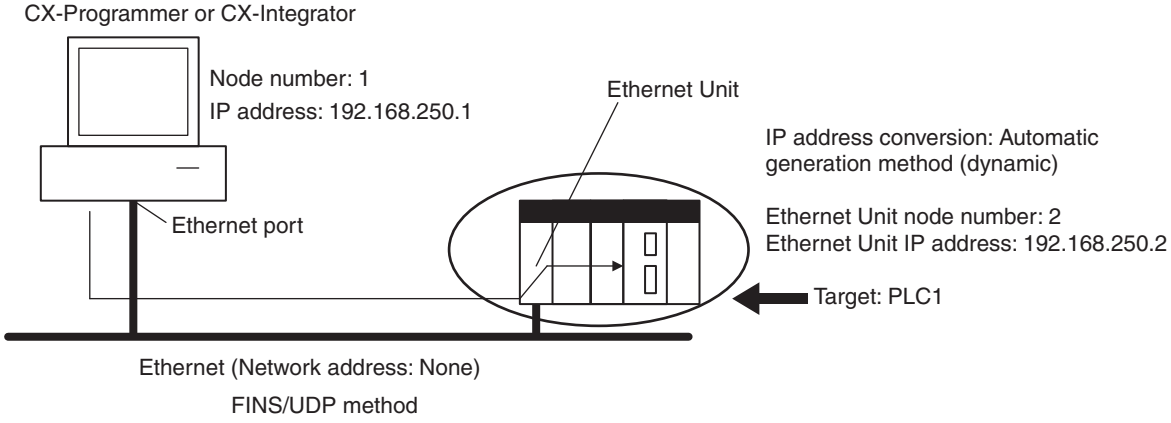

CX-Programmer's Change PLC Dialog Box

Settings for target PLC (PLC1)'s Change PLC Dialog Box			Setting
PLC name			PLC1
Network classification			Ethernet
Network Tab	FINS transmission source address		0
	FINS destination	Network number	0
		Node address	2
	Frame length		2,000 bytes
	Response monitor time		2 seconds
Driver Tab	Workstation node address		1
	Automatic generation method		Not selected
	IP address		192.168.250.2 (Ethernet Unit IP address)
	Port number		9600

CX-Programmer's Unit Setup

Setup Tab

Item	Setting
Broadcast	All ones (4.3BSD)
FINS/UDP port	Default (9600)
IP address	0.0.0.0 (Use default IP address.)
Subnet mask	0.0.0.0
IP address conversion	Automatic generation method (dynamic)
Baud rate	Automatic detection
IP router table	None

Example: Inputs to the CX-Programmer's Setup Window

Example: Change PLC Settings

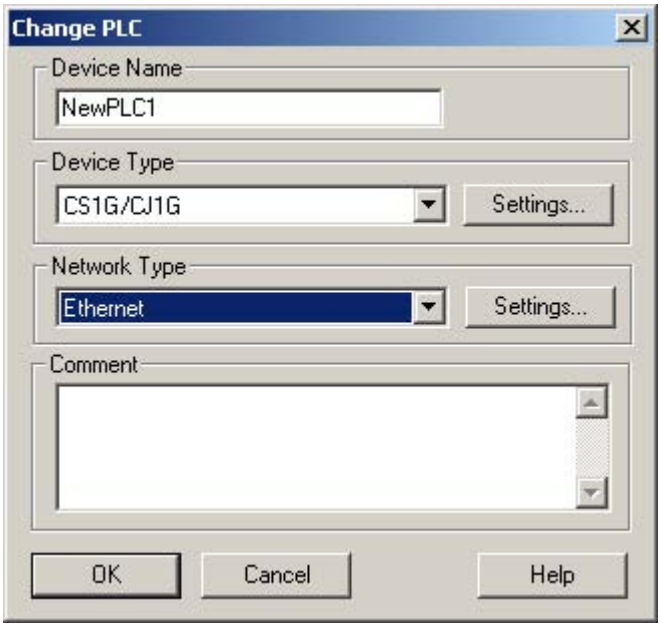

Example: Network Settings (Network Tab)

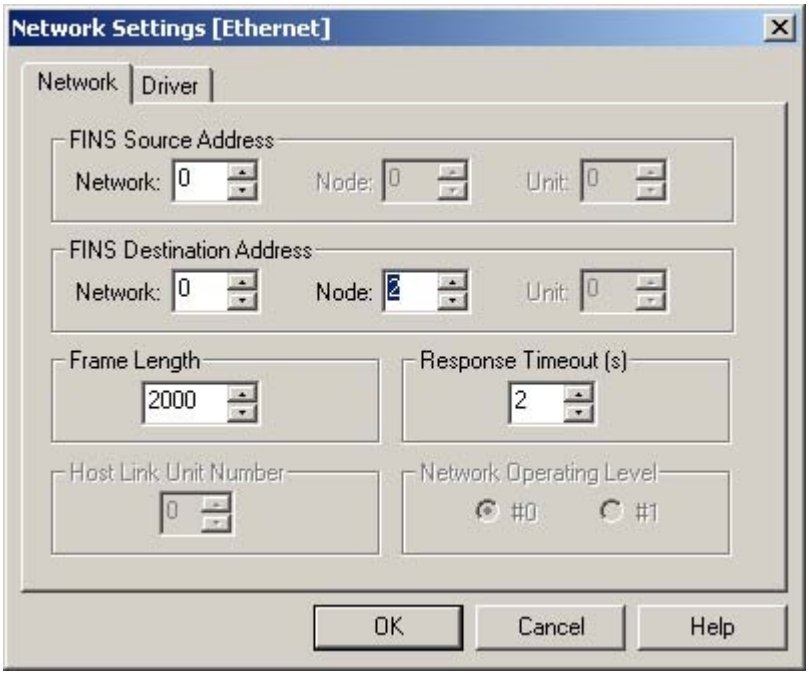

Note When FinsGateway is selected as the network type, make sure that the frame length is set to 2,000 bytes max.

Example: Network Settings (Driver Tab)

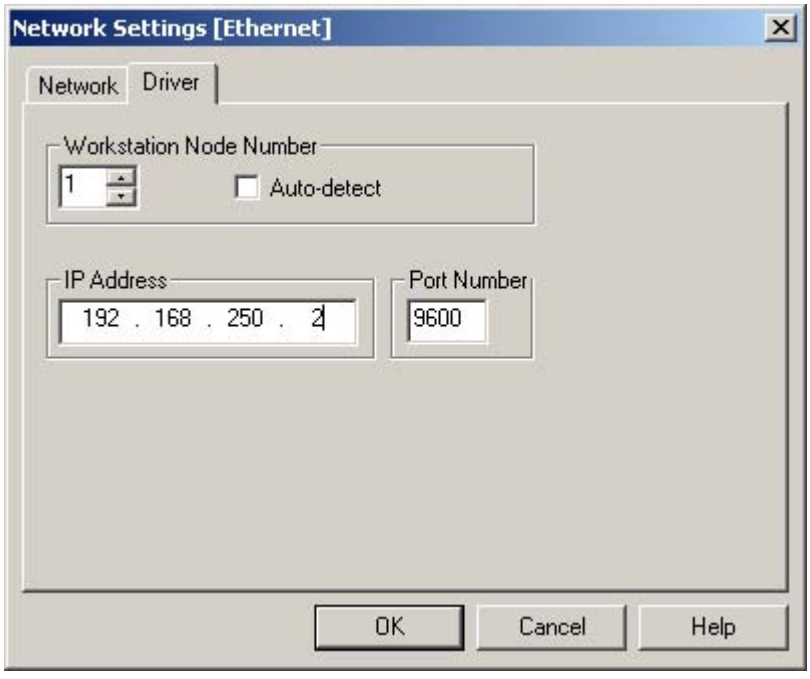

■ System Configuration Example 2: Using Routing Tables

In this example, an online connection is made via the Ethernet to a PLC on a Controller Link network (PLC 3 below) from a CX-Programmer or CX-Integrator connected to the Ethernet network.

Conditions

- FINS/UDP method
- IP address conversion: Automatic generation method (dynamic)

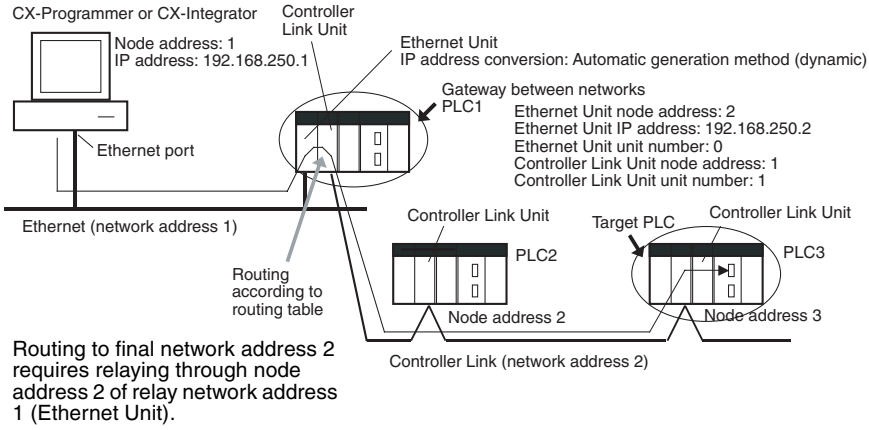

CX-Programmer's Change PLC Dialog Box

Settings for target PLC (PLC3)'s Change PLC Dialog Box			Setting
PLC name			PLC3
Network classification			Ethernet
Network Tab	FINS destination	FINS transmission source address	1
		Network number	2
		Node address	3
	Frame length		2,000 bytes
	Response monitor time		2 seconds
Driver Tab	Workstation node address		1
	Automatic generation method		Not selected
	IP address		192.168.250.2 (Ethernet Unit IP address)
	Port number		9600

CX-Programmer's Unit Setup

Setup Tab

Same as for *System Configuration Example 1*.

Routing Table Settings and Transfer to Each PLC

Set the routing tables with CX-Integrator, and transfer them.

1. Using CX-Integrator, connect online, and select ***Routing table*** – ***Settings***. Then create FINS local routing tables (a local network table and a relay network table).

   Example: PLC 1 Routing Table Settings

- Local Network Table

Unit number	Local network number
0	1
1	2

- Relay Network Table

  None

  Example: PLC 2 and PLC 3 Routing Table Settings

- Local Network Table

Unit number	Local network number
0	2

- Relay Network Table

  In order to relay from PLC2/3 to the final network number 1, it is necessary to relay via node address 1 (i.e., the Controller Link Unit) on relay network number 2.

Final network number	Relay network number	Relay node address
1	2	1

2. Save the routing table file (File - Save local routing table file).
3. Select ***New*** from the Project Menu, and save with a file name. Then select ***Add Device*** from the Project Menu. For each PLC, register a PLC with a direct serial connection (node address: 0), and select it.
4. With CX-Integrator, select ***Open*** from the PLC Menu.
5. Select ***Routing table*** – ***Setup***, read the saved file, and select ***Options*** – ***Transfer to PLC***. Click **Yes** to transfer the routing tables to the connected PLCs.

6-5-2 FinsGateway

FinsGateway Ver. 2003 must be used to communicate using FINS/TCP between applications serving as communications drivers and CS1W-ETN21 or CJ1W-ETN21 Ethernet Units.

FinsGateway Ver. 3.□ or lower versions can be used, however, when communicating by the FINS/UDP method only.

■ Overview of Setup Methods

1. Starting FinsGateway Settings

Select ***FinsGateway*** – ***FinsGateway Setup*** to start the FinsGateway Setup.

2. ETN_UNIT Driver Setup

1. Double-click on **ETN_UNIT** in the settings for the network and Unit. The following ETN_UNIT Properties Window will be displayed.

• Network Tab

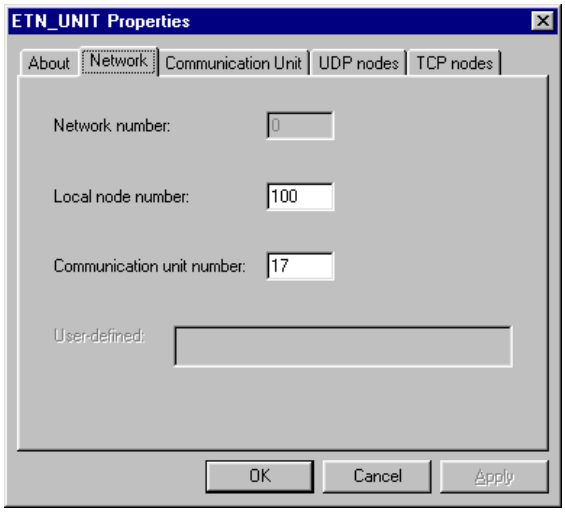

• Network number	Set the network number for the personal computer (Ethernet port).
• Local node address	Set the personal computer (Ethernet port) node address (1 to 254) on the Ethernet network.
• Communication unit number	Set the unit number in decimal (16 to 31) for the personal computer (Ethernet port).

• Communication Unit Tab

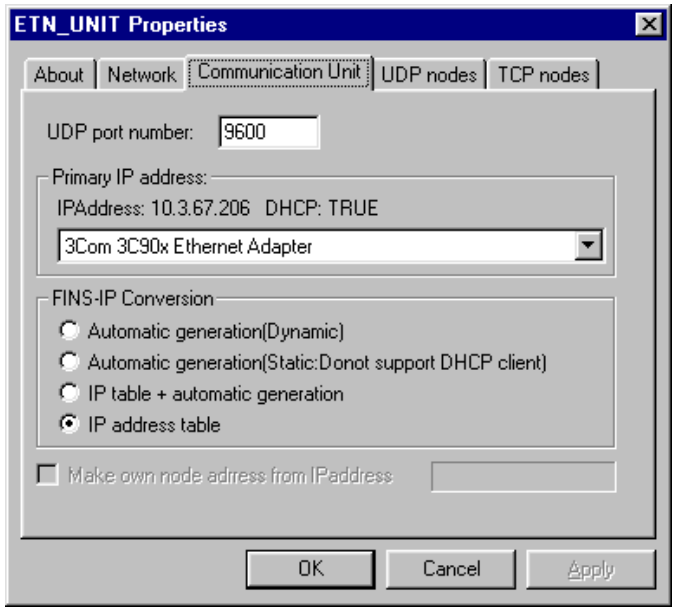

• UDP port number	Set the local UDP port number for the personal computer (Ethernet port). The default is 9600.
• Priority Network Card	If multiple Network Cards are mounted at the personal computer, select the Network Card that is to be given priority.
• FINS - IP address conversion	Set the IP address conversion method.

• UDP Nodes Tab: Automatic Generation Method (Dynamic or Passive)

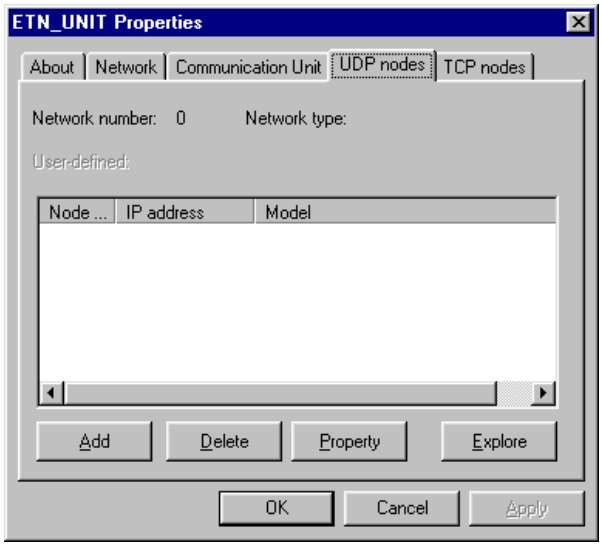

• UDP Nodes Tab: IP Address Table Method or Combined Method

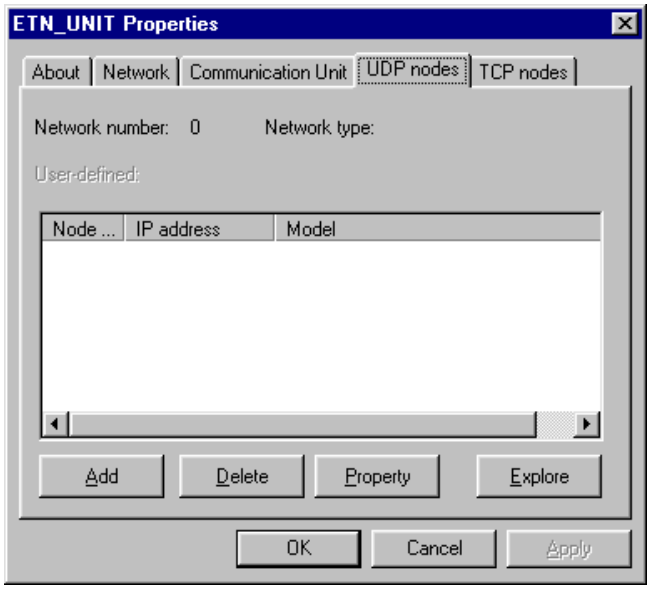

Click the **Add** Button, and then set the IP address table in the following Ethernet Node Definition Dialog Box.

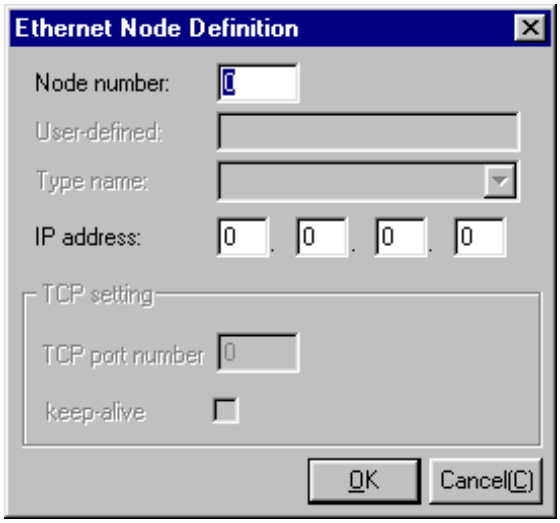

- Node address: Set the remote FINS node address.
- IP address: Set the remote IP address.

- TCP Nodes Tab

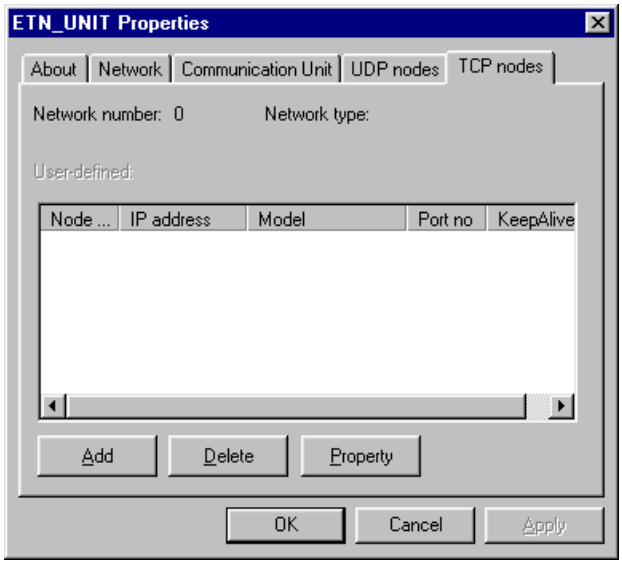

Click the **Add** Button, and then set the IP address table in the following Ethernet Node Definition Dialog Box.

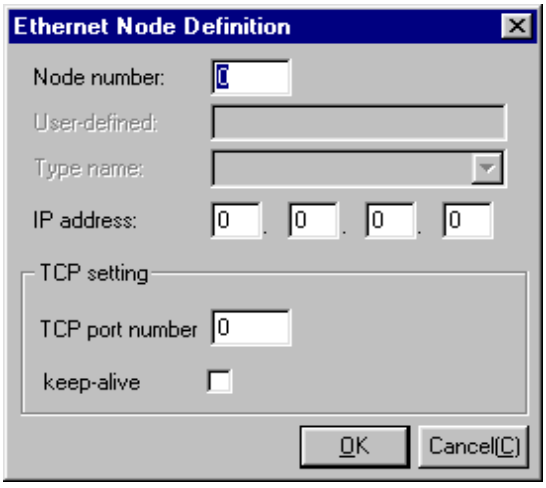

- Node address: Set the remote FINS node address.
- IP address: Set the remote IP address.
- Destination port number: Set the FINS/TCP port number for the remote node. Normally the PLC's default setting of 9600 should be specified.
- Keep-alive setting: Sets the keep-alive function. Normally this should be selected.

3. Starting FinsGateway ETN_UNIT Service

Select ETN_UNIT from Services under the Basic Tab in the FinsGateway Setup Window, and then click the **Start** Button.

■ System Configuration Example 3: Connecting the CX-Programmer Online Using the FINS/TCP Method

In this example, an online connection is made by FINS/TCP to a PLC on an Ethernet network (PLC1 in the diagram below) from a CX-Programmer/CX-Integrator connected to the Ethernet network.

Conditions

- FINS/TCP method

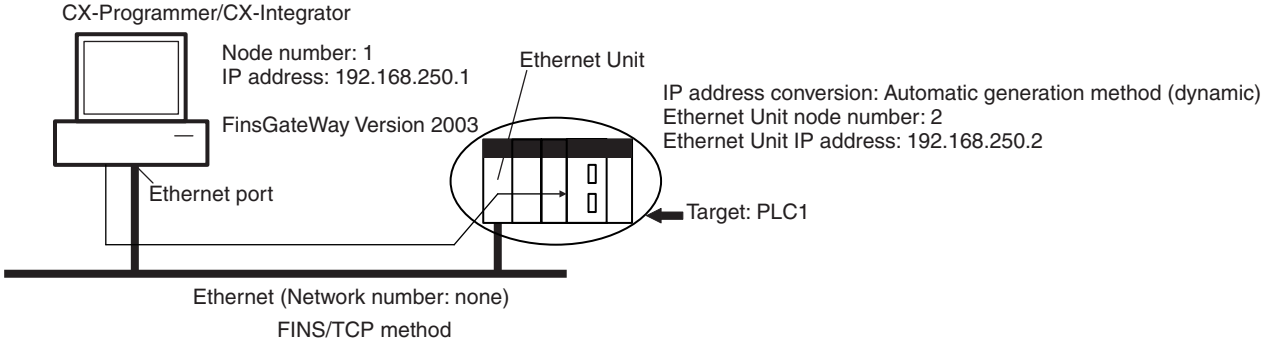

CX-Programmer's Change PLC Dialog Box

Settings for target PLC (PLC1)'s Change PLC Dialog Box			Setting
PLC name			PLC1
Network classification			FinsGateway
Network Tab	FINS destination	Network number	0
		Node address	2
	Frame length		2,000 bytes
	Response monitor time		2 seconds

CX-Programmer's Unit Setup

Setup Tab

Item	Setting
Broadcast	All ones (4.3BSD)
FINS/TCP port	Default (9600)
IP address	0.0.0.0 (Use default IP address.)
Subnet mask	0.0.0.0
Baud rate	Automatic detection
IP router tables	None

FINS/TCP Tab

Not set. (All defaults are used.)

FinsGateway ETN_UNIT Setup

TCP Nodes Tab: Ethernet Node Definition Dialog Box

Item	Setting
Node address	2
IP address	192.168.250.2
Destination port number	9600
Keep-alive setting	Selected (yes)

6-6 Communicating between OMRON PLCs

FINS commands can be sent from the user's ladder-diagram program in the PLC by using the SEND(090), RECV(098), and CMND(490) instructions.

SEND(090): Writes I/O data from the local node to another node.
RECV(098): Reads I/O data from another node to the local node.
CMND(490): Issues FINS commands for controlling operations such as sending and receiving I/O memory data to and from other nodes, reading information regarding other nodes, and so on.

6-6-1 Communications Specifications

The following table shows the specifications for PLC communications using the SEND(090), RECV(098), and CMND(490) instructions.

Item	Specifications
Destination	1:1 SEND(090), RECV(098), CMND(490) instructions 1:N SEND(090), CMND(490) instructions (broadcasting)
Data length	SEND(090): 990 words (1,980 bytes) max.; broadcasting: 727 words (1,454 bytes) RECV(098): 990 words (1,980 bytes) max. CMND(490): 1,990 bytes max.; broadcasting: 1,462 bytes (after FINS command code)

Item	Specifications
Data contents	The following data is sent and received with the execution of each instruction. SEND(090): Sends request for remote node to receive data, and receives response data. RECV(098): Sends request for remote node to send data, and receives response data. CMND(490): Sends any FINS command and receives response data.
Communications port number	Ports 0 to 7 (Eight transmissions can occur simultaneously.)
Response monitor time	0000: 2 s (default) 0001 to FFFF: 0.1 to 6,553.5 s in 0.1-s increments (specified by user)
Number of retries	0 to 15 retries

Note
1. The maximum data length is limited to 512 bytes for data exchange between the PLC and SYSMAC LINK Systems or the PLC and SYSMAC BUS/2 Remote I/O Systems.
2. When broadcasting, do not require a response.
   Use the FINS/UDP method for broadcasting.

6-6-2 PLC Communications Data Areas

The following table shows the I/O data areas involved when SEND(090) and RECV(098) are used.

Area	Range
CIO Area	CIO 0000 to CIO 6143
Work Area	W000 to W511
Holding Area	H000 to H511
Auxiliary Area	A000 to A959 (See note 1.)
Timer Area	T0000 to T4095
Counter Area	C0000 to C4095
DM Area	D00000 to D32767
EM Area	E00000 to E32767 (See note 2.)

Note
1. Data cannot be written to words A000 to A447 in the Auxiliary Area.
2. A maximum of 13 banks in the EM Area can be used. For details regarding the EM Area, refer to the operation manual for the PLC that is used.

6-6-3 Using SEND(090), RECV(098), and CMND(490)

Make the settings shown below when using the SEND(090), RECV(098), and CMND(490) instructions in the user's ladder-diagram program in the PC.

SEND(090)

The SEND(090) instruction sends the data in n number of words, starting from the beginning word S at the local node, to the words starting from the beginning word D at the remote destination node (node address N).

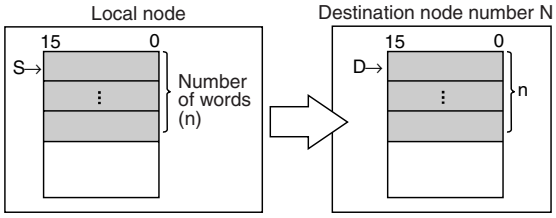

(@)SEND(90)
S
D
C

S: Local node beginning word
D: Destination beginning word
C: First word of control data (below)

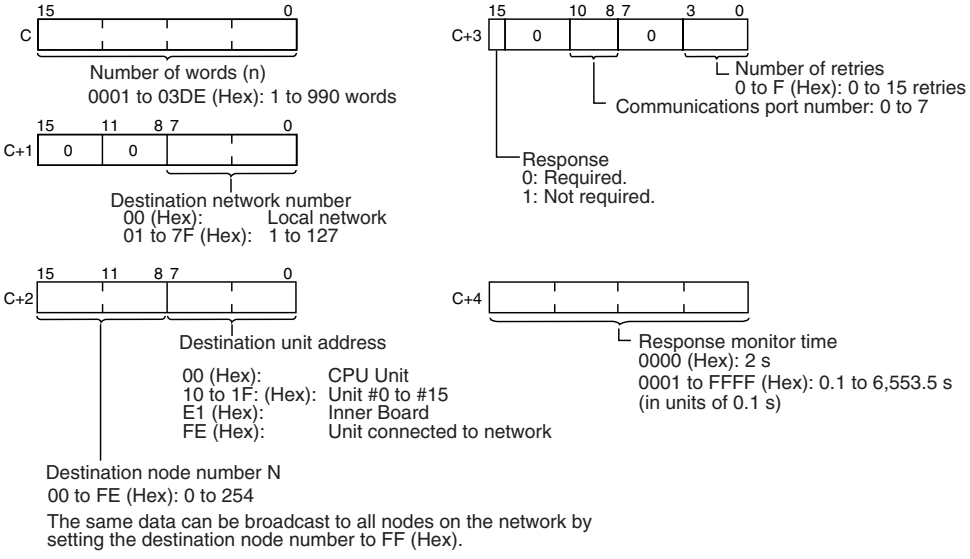

Note The message service does not guarantee that a message will reach the destination node. A message may be lost during transmission due to factors such as noise. To prevent this from occurring when using message services, it is common to set up retry processing at the node from which instructions are issued. With the SEND(090), RECV(098), and CMND(490) instructions, retry processing is executed automatically by specifying the number of retries, so specify a number other than 0.

RECV(098)

With the RECV(098) instruction, the data in m number of words, starting from the beginning word S at the remote node (node address M) is received at the words starting from the beginning word D at the local node.

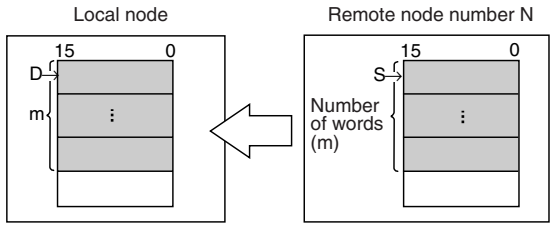

(@)RECV(98)	
S	S: Remote node beginning word
D	D: Local beginning word
C	C: First word of control data (below)

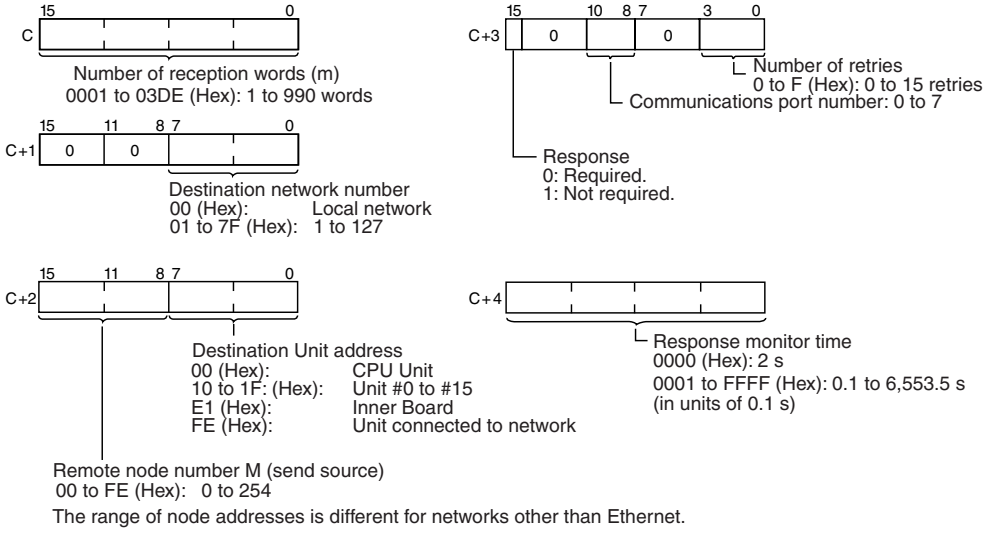

Note The message services function does not guarantee that a message will reach the destination node. A message may be lost during transmission due to factors such as noise. In order to prevent this from occurring when using message services, it is common to set up retry processing at the node from which instructions are issued. With the SEND(090), RECV(098), and CMND(490) instructions, retry processing is executed automatically by specifying the number of retries, so specify a number other than 0.

CMND(490)

The CMND(490) instruction sends n bytes of command data, starting from the beginning word S at the local node, to the node at node address N. the data in m number of words, starting from the beginning word S at the remote node (node address M) is received at the words starting from the beginning word D at the local node.

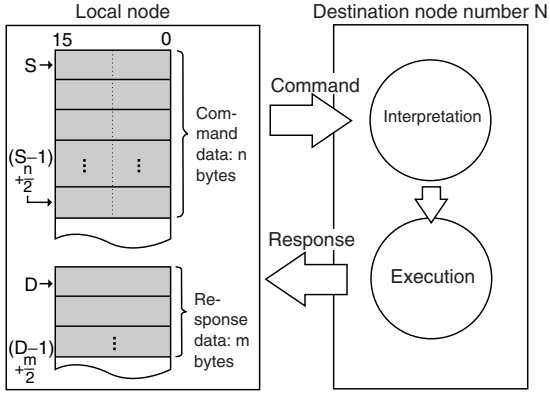

(@)CMND(490)
S
D
C

S: Beginning command storage word
D: Beginning response storage word
C: First word of control data (below)

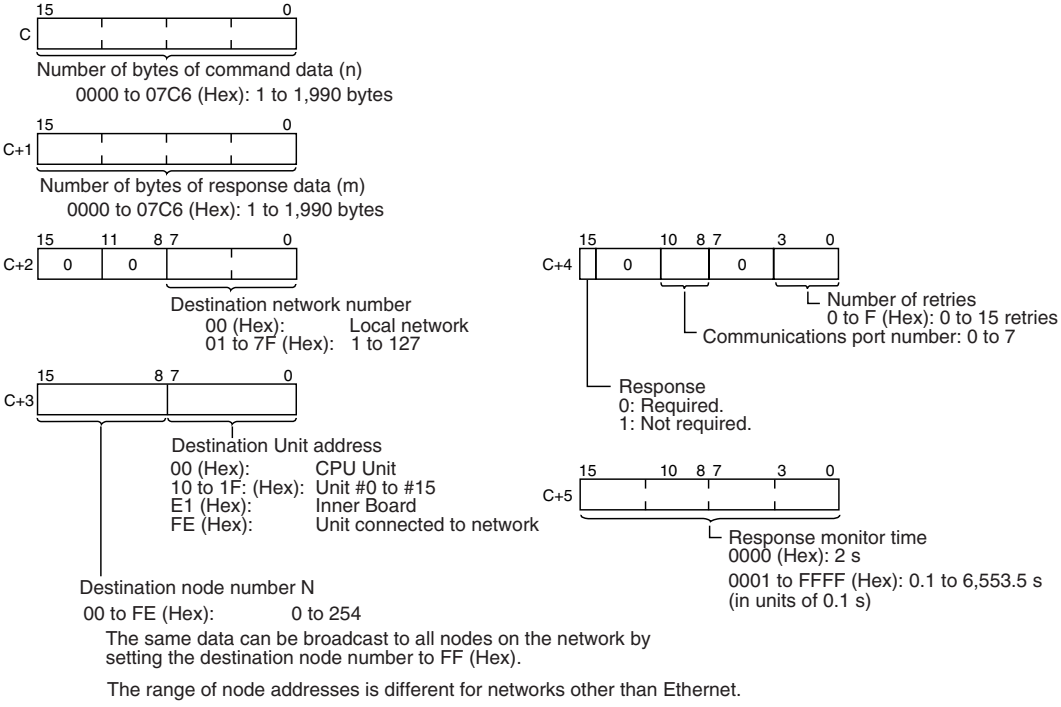

Note The message services function does not guarantee that a message will reach the destination node. A message may be lost during transmission due to factors such as noise. In order to prevent this from occurring when using message services, it is common to set up retry processing at the node from which instructions are issued. With the SEND(090), RECV(098), and CMND(490) instructions, retry processing is executed automatically by specifying the number of retries, so specify a number other than 0.

Commands Addressed to CS/CJ-series CPU Units

The following table provides a list of FINS commands that can be processed by a CS/CJ-series CPU Unit. For details, refer to the *CS/CJ-series Programmable Controllers Communications Commands Reference Manual* (W342).

For details on FINS commands that can be processed by the Ethernet Unit, refer to *SECTION 7 FINS Commands Addressed to Ethernet Units*.

Usage	Command code		Name	Function
	MR	SR		
I/O memory area access	01	01	MEMORY AREA READ	Reads the contents of consecutive I/O memory area words.
	01	02	MEMORY AREA WRITE	Writes the contents of consecutive I/O memory area words.
	01	03	MEMORY AREA FILL	Writes the same data to the specified range of I/O memory area words.
	01	04	MULTIPLE MEMORY AREA READ	Reads the contents of specified non-consecutive I/O memory area words.
	01	05	MEMORY AREA TRANSFER	Copies the contents of consecutive I/O memory area words to another I/O memory area.
Parameter area access	02	01	PARAMETER AREA READ	Reads the contents of consecutive parameter area words.
	02	02	PARAMETER AREA WRITE	Writes the contents of consecutive parameter area words.
	02	03	PARAMETER AREA FILL (CLEAR)	Writes the same data to the specified range of parameter area words.
Program area access	03	06	PROGRAM AREA READ	Reads the UM (User Memory) area.
	03	07	PROGRAM AREA WRITE	Writes to the UM (User Memory) area.
	03	08	PROGRAM AREA CLEAR	Clears the UM (User Memory) area.
Operating mode changes	04	01	RUN	Changes the CPU Unit's operating mode to RUN or MONITOR.
	04	02	STOP	Changes the CPU Unit's operating mode to PROGRAM.
Machine configuration reading	05	01	CPU UNIT DATA READ	Reads CPU Unit data.
	05	02	CONNECTION DATA READ	Reads the model numbers of the device corresponding to addresses.
Status reading	06	01	CPU UNIT STATUS READ	Reads the status of the CPU Unit.
	06	20	CYCLE TIME READ	Reads the maximum, minimum, and average cycle time.
Time data access	07	01	CLOCK READ	Reads the present year, month, date, minute, second, and day of the week.
	07	02	CLOCK WRITE	Changes the present year, month, date, minute, second, or day of the week.
Message display	09	20	MESSAGE READ/CLEAR	Reads and clears messages, and reads FAL/FALS messages.
Access rights	0C	01	ACCESS RIGHT ACQUIRE	Acquires the access right as long as no other device holds it.
	0C	02	ACCESS RIGHT FORCED ACQUIRE	Acquires the access right even if another device already holds it.
	0C	03	ACCESS RIGHT RELEASE	Releases the access right that has been acquired.
Error log	21	01	ERROR CLEAR	Clears errors or error messages.
	21	02	ERROR LOG READ	Reads the error log.
	21	03	ERROR LOG POINTER CLEAR	Clears the error log pointer.

Usage	Command code		Name	Function
	MR	SR		
File memory	22	01	FILE NAME READ	Reads file memory data.
	22	02	SINGLE FILE READ	Reads a specified length of file data from a specified position within a single file.
	22	03	SINGLE FILE WRITE	Writes a specified length of file data from a specified position within a single file.
	22	04	FILE MEMORY FORMAT	Formats (initializes) the file memory.
	22	05	FILE DELETE	Deletes specified files stored in the file memory.
	22	07	FILE COPY	Copies files from one file memory to another file memory in the same system.
	22	08	FILE NAME CHANGE	Changes a file name.
	22	0A	MEMORY AREA–FILE TRANSFER	Transfers or compares data between the I/O memory area and the file memory.
	22	0B	PARAMETER AREA–FILE TRANSFER	Transfers or compares data between the parameter area and the file memory.
	22	0C	PROGRAM AREA–FILE TRANSFER	Transfers or compares data between the UM (User Memory) area and the file memory.
	22	15	CREATE/DELETE DIRECTORY	Creates or deletes a directory.
Debugging	23	01	FORCED SET/RESET	Force-sets or force-resets bits, or releases force-set status.
	23	02	FORCED SET/RESET CANCEL	Cancels all bits that have been force-set or force-reset.

6-6-4 Writing Programs

Programs incorporating the SEND(090), RECV(098), and CMND(490) instructions are generally created using the Communications Port Enabled Flag and the Communications Port Error Flag as input conditions. CS/CJ-series CPU Units have eight communications ports. Only one instruction can be executed at any given port at one time, however, so the program must not overlap the use of any of the ports. A program example is provided below.

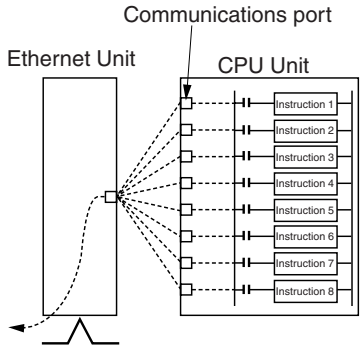

There are eight communications ports, so up to eight communications instructions can be executed at a time. The number of messages that can be sent or received with a single CPU Bus Unit service, though, is not more than two each for the CPU Unit to the Ethernet Unit and for the Ethernet Unit to the CPU Unit.

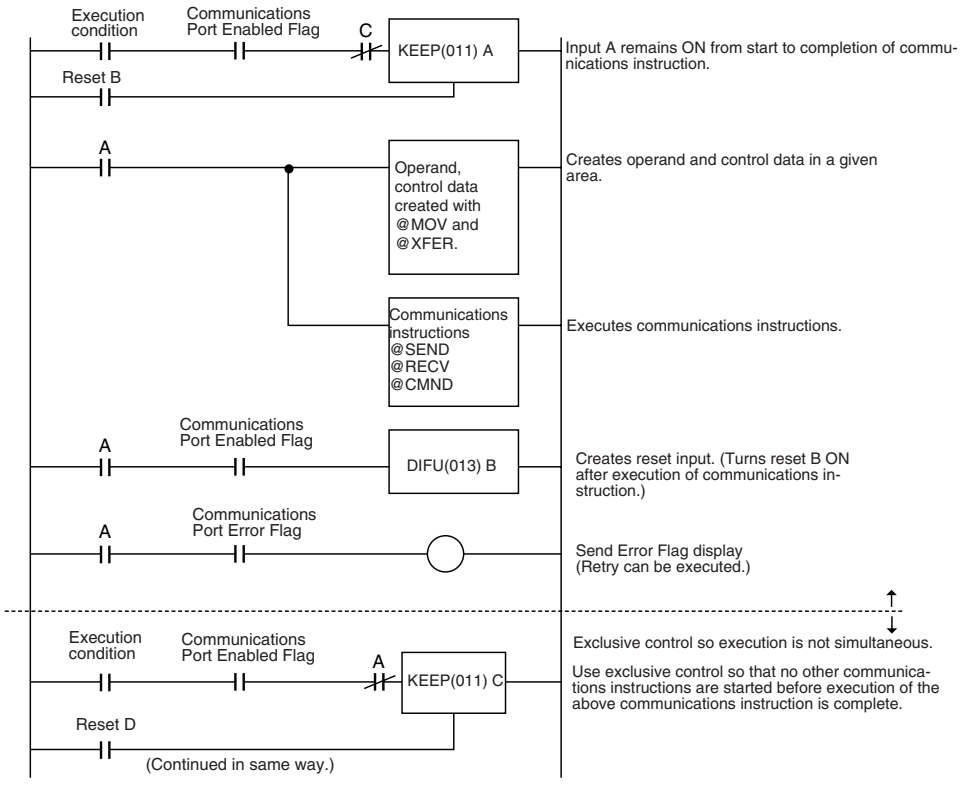

The execution status of the SEND(090), RECV(098), and CMND(490) instructions is always reflected by the communications flags (i.e., the Communications Port Enabled Flag and the Communications Port Error Flag). The CS/CJ-series CPU Unit's communications flags are allocated in the Auxiliary Area as shown in the following table.

Flag name	Address		Contents
	Word	Bits	
Communications Port Enabled Flag	A202	Bit 7: Port 7 Bit 6: Port 6 Bit 5: Port 5 Bit 4: Port 4 Bit 3: Port 3 Bit 2: Port 2 Bit 1: Port 1 Bit 0: Port 0	OFF: Execution enabled (being executed) ON: Execution disabled (not being executed)
Communications Port Error Flag	A219	Bit 7: Port 7 Bit 6: Port 6 Bit 5: Port 5 Bit 4: Port 4 Bit 3: Port 3 Bit 2: Port 2 Bit 1: Port 1 Bit 0: Port 0	0: Normal completion 1: Abnormal completion

Note With CS/CJ-series PLCs, communications ports 0 to 7 are also used for executing the PCMR(260) (PROTOCOL MACRO) instruction, so these flags are used in common for SEND(090), RECV(098), CMND(490), and PCMR(260). While PCMR(260) is being executed, SEND(090), RECV(098), and CMND(490) cannot be executed at the same communications port.

Communications Port Completion Codes

The status of a SEND(090), RECV(098), and CMND(490) instruction after execution is reflected as a communications port completion code, in one word (two bytes) of data as shown in the following table. (The value is 0000 during instruction execution.) The recorded status is saved until execution of the next instruction.

Word	Contents
A203	Communications Port 0 Completion Code
A204	Communications Port 1 Completion Code
A205	Communications Port 2 Completion Code
A206	Communications Port 3 Completion Code
A207	Communications Port 4 Completion Code
A208	Communications Port 5 Completion Code
A209	Communications Port 6 Completion Code
A210	Communications Port 7 Completion Code

The meanings of the communications port completion codes are the same as those for FINS commands and responses. When CMND(490) is used, however, even if a FINS command has an abnormal completion, it will not be reflected in the communications port completion code. For details, refer to *Communications Port Error Flag and Completion Codes for CMND(490)* below.

Bits 08 to 15 in the communications port completion code correspond to the first byte of the response code, and bits 00 to 07 correspond to the second byte. For details, refer to *8-4-7 Troubleshooting with Response Codes*.

Communications Port Error Flag and Completion Codes CMND(490)

Errors that occur when CMND(490) is used generate a Communications Port Error Flag and are recorded in a communications port completion code only in the following cases:

- When a response timeout error has occurred.
- When the number of communications data bytes exceeds the maximum value for the Unit (i.e., 2,000 bytes for the Ethernet Unit).
- When the actual number of response bytes is greater than the number of reception bytes that has been set. (The response is not stored in this case.)

Errors other than these are recorded in the response codes of the responses stored from the beginning response storage word onwards. Be careful of these, because there are no Communications Port Error Flags and they are not recorded in a communications port completion code.

Timing of Communications Flag Changes

- The Communications Port Enabled Flag remains OFF during communications and turns ON when they are completed (regardless of whether or not an error occurs).
- The Communications Port Error Flag retains its status until the next transmission or reception.
- The Communications Port Error Flag turns OFF with the execution of the next communications instruction even if there was an abnormal completion.

Example

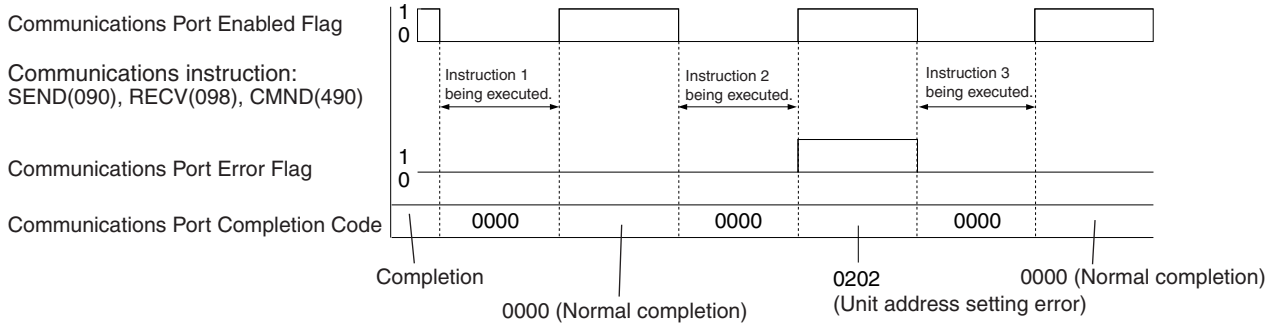
Communications Port Enabled Flag
1
0
Communications instruction:
SEND(090), RECV(098), CMND(490)
Instruction 1 being executed.
Instruction 2 being executed.
Instruction 3 being executed.
Communications Port Error Flag
1
0
Communications Port Completion Code
0000
0000
0000
Completion
0000 (Normal completion)
0202
(Unit address setting error)
0000 (Normal completion)

6-6-5 Program Example

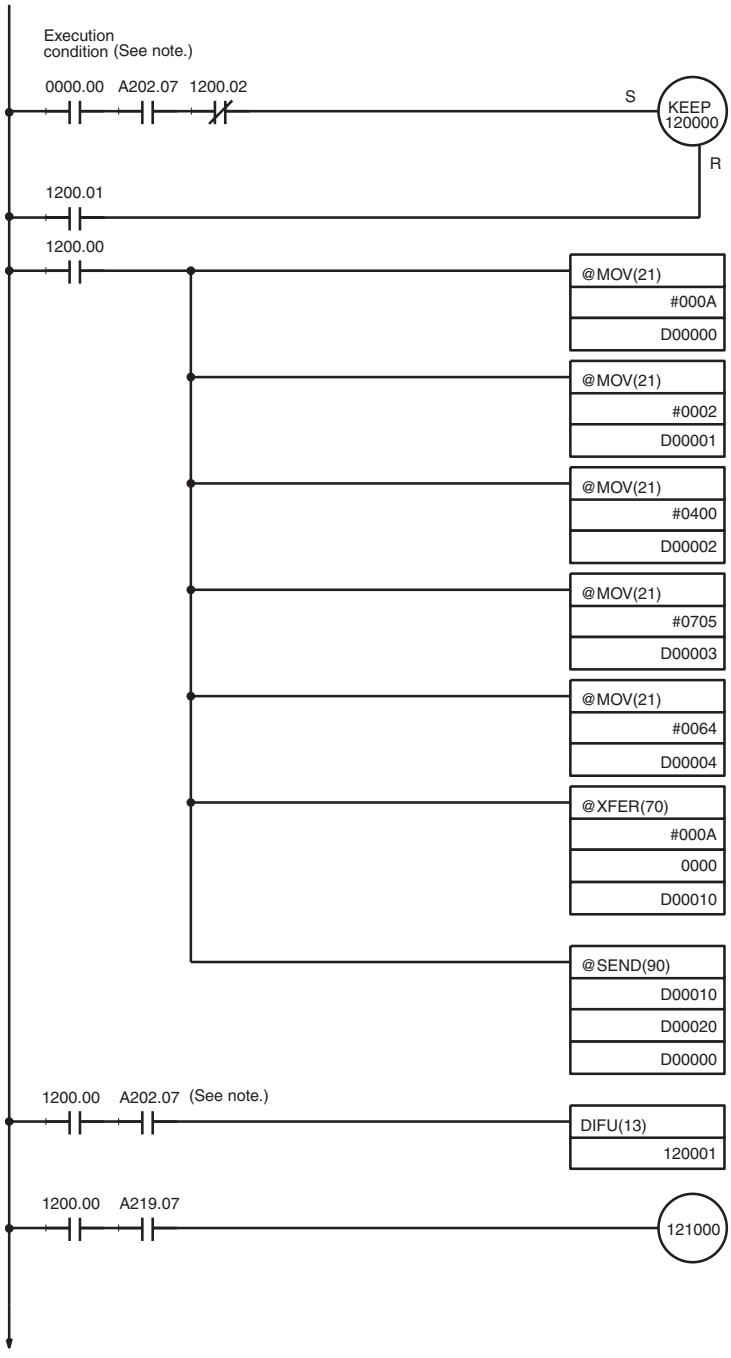

When the Communications Port Enabled Flag for port 7 is ON, and RECV(098) is not being executed, the send execution program will start when execution condition CIO 0000.00 turns ON.

Input CIO 1200.00 remains ON from the start of SEND(090) execution until completion.

Control Data Creation

Word	Contents		Meaning
D00000	00	0A	Number of send words = 10
D00001	00	02	Destination network number = 2
D00002	04	00	Destination node number = 4 Destination unit address = 0
D00003	07	05	Response required. Communications port No. used = 7 Number of retries = 5
D00004	00	64	Response monitor time = 10 s

Send Data Creation

Ten words of data from word CIO 0000 is stored from D00010 onwards.

Ten words of data from D00010 at the local node is sent to D00020 onwards at network number 2, node number 4, unit address 0 (the PLC).

Reset Input Creation

Send Error Display

(Continued on next page.)

(Continued from previous page.)

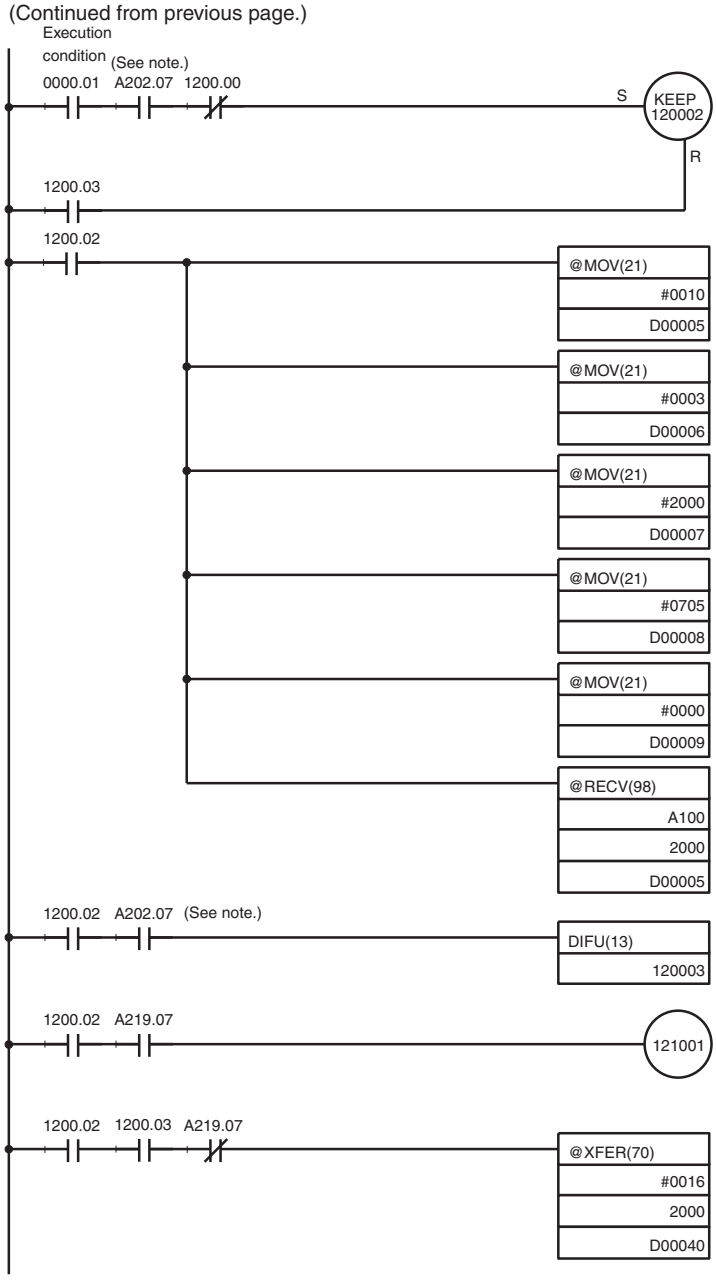

When the Communications Port Enabled Flag for port 7 is ON, and SEND(090) is not being executed, the transmission execution program will start when execution condition CIO 0000.01 turns ON.

Input CIO 1200.02 remains ON from the start of RECV(098) execution until completion.

Control Data Creation

Word	Contents		Meaning
D00005	00	10	Number of reception words = 16
D00006	00	03	Source network number = 3
D00007	20	00	Source node number = 32 Source unit address = 0
D00008	07	05	Response required. Communications port No. used = 7 Number of retries = 5
D00009	00	00	Response monitor time = Default

A total of 16 words of data beginning from word A100 at network number 3, node number 32, unit address 0 (the PLC) is received at word CIO 2000 onwards of the local node.

Reset Input Creation

Reception Error Display

Reception Data Processing

If there is no reception processing completion error, the 16 words of data received from word CIO 2000 onwards is stored at D00040 onwards.

Note

1. With CS/CJ-series PLCs, the Communications Port Enabled Flags at bits 0 to 7 in word A202 turn OFF even when the PCMR(260) instruction is being executed using the ports corresponding to those flags.
2. Before using the sample program as is, confirm that the memory areas (words and bits) used in the sample program are not already being used in the user program o r by Special I/O Units.

6-6-6 Transmission Delays

The methods of computing the maximum time required from execution of the SEND(090), RECV(098), and CMND(490) instructions until processing is completed are described in this section.

SEND(090)

The transmission delay for the SEND(090) instruction can be calculated using the following equation, which is illustrated in the following diagram.

Max. delay = CPU Bus Unit service cycle (local node)
+CPU Bus Unit service processing time (local node)
+Transmission processing time
+Transmission Delays
+Reception processing time
+CPU Bus Unit service cycle (remote node)
+CPU Bus Unit service processing time (remote node)

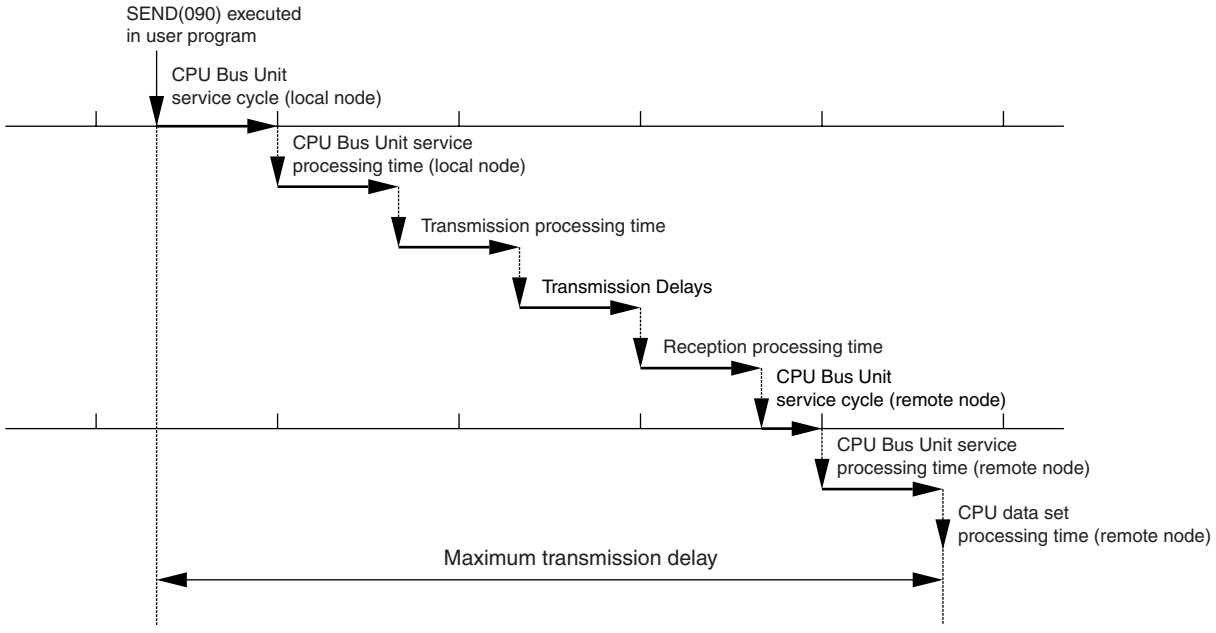

CPU Bus Unit Service Cycle (Local Node)

The processing time will be as follows, depending on the CPU processing mode settings at the CPU Unit:

CPU execution mode	Processing time considerations
Normal Mode	CPU Unit cycle time
Priority peripheral servicing	
Parallel processing with synchronous memory access	
Parallel processing with asynchronous memory access	0.2 ms + peripheral servicing time (1 ms max. of peripheral servicing time for each Special I/O Unit, CPU Bus Unit, peripheral port, RS-232C port, and Inner Board)

For details, refer to the CPU Unit operation manual.

CPU Bus Unit Service Processing Time (Local Node)

The processing time will be as follows, depending on the CPU processing mode settings at the CPU Unit:

CPU execution mode	Processing time considerations
Normal Mode	Set time for peripheral servicing (Default: 4% of CPU Unit cycle time)
Priority peripheral servicing	
Parallel processing with synchronous memory access	
Parallel processing with asynchronous memory access	1 ms max.

For details, refer to the CPU Unit operation manual.

Transmission Processing Time

Number of words sent x 0.002 + 0.550 ms

Transmission Delay

The transmission delay time will be as given below, depending on the baud rate set for the Ethernet Unit. (There may be additional delays depending on devices, such as hubs, in the network configuration.)

Baud rate	Delay time
100Base-TX	Number of words sent × 0.0013 + 0.0118 ms
10Base-T	Number of words sent × 0.0019 + 0.0157 ms

Reception Processing Time

Number of words sent × 0.003 + 0.704 ms

CPU Bus Unit Service Cycle (Remote Node)

The processing time will be as follows, depending on the CPU processing mode settings at the CPU Unit.

CPU processing mode settings	Processing time considerations	
Normal Mode	CPU Unit cycle time	
Priority peripheral servicing	Ethernet Unit is given priority.	Time slice instruction execution time
	Ethernet Unit is not given priority.	CPU Unit cycle time
Parallel processing with synchronous memory access	CPU Unit cycle time	
Parallel processing with asynchronous memory access	0.2 ms + peripheral servicing time (1 ms max. of peripheral servicing time for each Special I/O Unit, CPU Bus Unit, peripheral port, RS-232C port, or Inner Board)	

For details, refer to the CPU Unit operation manual.

CPU Bus Unit Service Processing Time (Remote Node)

The processing time will be as follows, depending on the CPU processing mode settings at the CPU Unit.

CPU processing mode settings	Processing time considerations	
Normal Mode	Set peripheral servicing time Default: 4% of CPU Unit cycle time	
Priority peripheral servicing	Ethernet Unit is given priority.	Time slice peripheral servicing execution time
	Ethernet Unit is not given priority.	Set peripheral servicing time (Default: 4% of CPU Unit cycle time)
Parallel processing with synchronous memory access	Set peripheral servicing time (Default: 4% of CPU Unit cycle time)	
Parallel processing with asynchronous memory access	1 ms max.	

For details, refer to the CPU Unit operation manual.

Note The actual operating environment can cause transmission delays larger than those calculated with the methods given here. Among the causes of longer delays are the following: traffic on the network, window sizes at network nodes, traffic through the Ethernet Unit (e.g., socket servicing, FTP server communications, etc.), and the system configuration.

Example Calculations

The following example shows calculations for sending 256 words between two PLC nodes using SEND(090). Calculations are shown in the following table.

Conditions

Local node CPU cycle time: 10 ms

Local node CPU execution mode: Normal

Local node CPU uniform peripheral servicing time: Default (4%)

Remote node CPU cycle time: 5 ms

Remote node CPU execution mode: Normal

Remote node CPU peripheral servicing time: Default (4%)

Baud rate: 100Base-TX

Item	Calculation
CPU Bus Unit service cycle (local node)	10 ms
CPU Bus Unit service processing time (local node)	0.4 ms
Transmission processing time	$256 \times 0.002 + 0.550 = 1.062 \approx 1.1$ ms
Transmission delay	$256 \times 0.0013 + 0.0118 = 0.3446 \approx 0.3$ ms
Reception processing time	$256 \times 0.003 + 0.704 = 1.472 \approx 1.5$ ms
CPU Bus Unit service cycle (remote node)	5 ms
CPU Bus Unit service processing time (remote node)	0.2 ms
Total	10 + 0.4 + 1.1 + 0.3 + 1.5 + 5 + 0.2 = 18.5 ms

RECV(098)

The transmission delay for the RECV(098) instruction can be calculated using the equation illustrated in the following diagram.

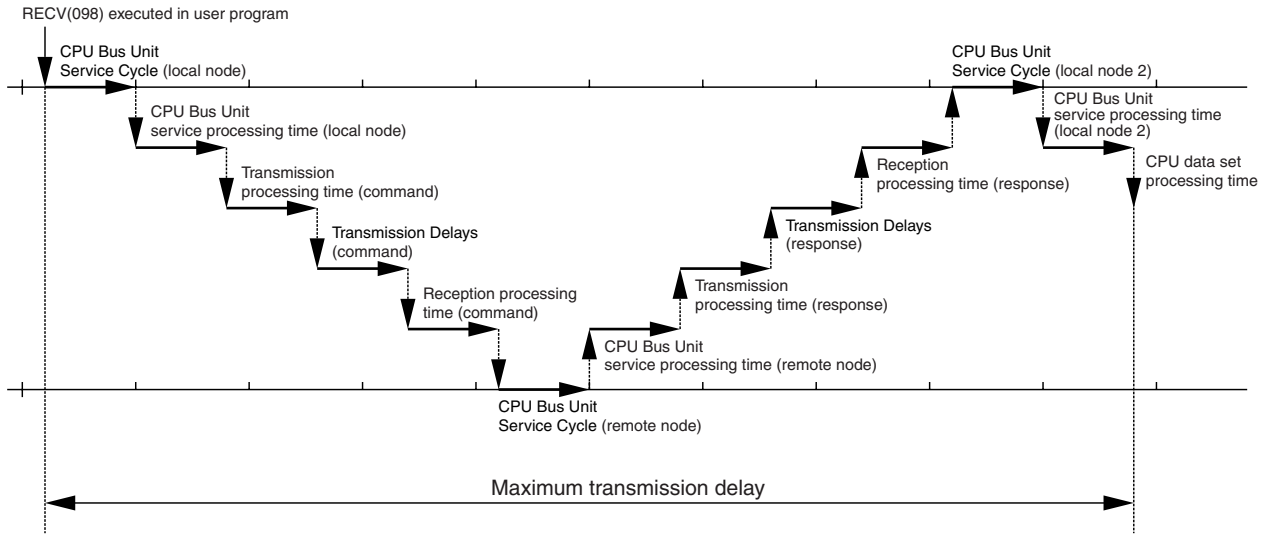

Maximum transmission delay time

CPU Bus Unit Service Cycle (local node 1)
+ CPU Bus Unit service processing time (local node 1)
+ Transmission processing time (command)
+ Transmission delay (command)
+ Reception processing time (command)
+ CPU Bus Unit Service Cycle (remote node)
+ CPU Bus Unit service processing time (remote node)
+ Transmission processing time (response)
+ Transmission Delays (response)
+ Reception processing time (response)
+ CPU Bus Unit Service Cycle (local node 2)
+ CPU Bus Unit service processing time (local node 2)

CPU Bus Unit Service Cycle (Local Node 1)

The processing time will be as follows, depending on the CPU processing mode settings at the CPU Unit:

CPU processing mode settings	Processing time considerations
Normal Mode	CPU Unit cycle time
Priority peripheral servicing	
Parallel processing with synchronous memory access	0.2 ms + peripheral servicing time (1 ms max. of peripheral servicing time for each Special I/O Unit, CPU Bus Unit, peripheral port, RS-232C port, or Inner Board)
Parallel processing with asynchronous memory access	

For details, refer to the CPU Unit operation manual.

CPU Bus Unit Service Processing Time (Local Node 1)

The processing time will be as follows, depending on the CPU processing mode settings at the CPU Unit:

CPU processing mode settings	Processing time considerations
Normal Mode	Set peripheral servicing time (Default: 4% of CPU Unit cycle time)
Priority peripheral servicing	
Parallel processing with synchronous memory access	1 ms max.
Parallel processing with asynchronous memory access	

For details, refer to the CPU Unit operation manual.

Transmission processing time (command)

Command	0.550 ms
Response	Number of words sent × 0.002 + 0.550 ms

Transmission Delay (Command)

The transmission delay time will be as follows, depending on the baud rate set for the Ethernet Unit. (There may be additional delays depending on devices such as hubs in the network configuration.)

Baud rate	Delay time	
100Base-TX	Command	0.0118 ms
	Response	Number of words sent × 0.0013 + 0.0118 ms
10Base-T	Command	0.0157 ms
	Response	Number of words sent × 0.0019 + 0.0157 ms

Reception processing time (command)

Command	0.704ms
Response	Number of words sent × 0.003 + 0.704 ms

CPU Bus Unit Service Cycle (Remote Node)

The processing time will be as follows, depending on the CPU processing mode settings at the CPU Unit.

CPU processing mode settings	Processing time considerations	
Normal Mode	CPU Unit cycle time	
Priority peripheral servicing	Ethernet Unit is given priority.	Time slice instruction execution time
	Ethernet Unit is not given priority.	CPU Unit cycle time
Parallel processing with synchronous memory access	CPU Unit cycle time	
Parallel processing with asynchronous memory access	0.2 ms + peripheral servicing time (1 ms max. of peripheral servicing time for each Special I/O Unit, CPU Bus Unit, peripheral port, RS-232C port, or Inner Board)	

For details, refer to the CPU Unit operation manual.

CPU Bus Unit service processing time (remote node)

The processing time will be as follows, depending on the CPU processing mode settings at the CPU Unit.

CPU processing mode settings	Processing time considerations	
Normal Mode	4% of CPU Unit cycle time	
Priority peripheral servicing	Ethernet Unit is given priority.	Time slice peripheral servicing execution time
	Ethernet Unit is not given priority.	Set peripheral servicing time (Default: 4% of CPU Unit cycle time)
Parallel processing with synchronous memory access	4% of CPU Unit cycle time	
Parallel processing with asynchronous memory access	1 ms max.	

For details, refer to the CPU Unit operation manual.

CPU Bus Unit Service Cycle (Local Node 2)

The processing time will be as follows, depending on the CPU processing mode settings at the CPU Unit.

CPU processing mode settings	Processing time considerations	
Normal Mode	CPU Unit cycle time	
Priority peripheral servicing	Ethernet Unit is given priority.	Time slice instruction execution time
	Ethernet Unit is not given priority.	CPU Unit cycle time
Parallel processing with synchronous memory access	CPU Unit cycle time	
Parallel processing with asynchronous memory access	0.2 ms + peripheral servicing time (1 ms max. of peripheral servicing time for each Special I/O Unit, CPU Bus Unit, peripheral port, RS-232C port, or Inner Board)	

For details, refer to the CPU Unit operation manual.

CPU Bus Unit Service Processing Time (Local Node 2)

The processing time will be as follows, depending on the CPU processing mode settings at the CPU Unit.

CPU processing mode settings	Processing time considerations	
Normal Mode	4% of CPU Unit cycle time	
Priority peripheral servicing	Ethernet Unit is given priority.	Time slice peripheral servicing execution time
	Ethernet Unit is not given priority.	Set peripheral servicing time (Default: 4% of CPU Unit cycle time)
Parallel processing with synchronous memory access	4% of CPU Unit cycle time	
Parallel processing with asynchronous memory access	1 ms max.	

For details, refer to the CPU Unit operation manual.

Note The actual operating environment can cause transmission delays larger than those calculated with the methods given here. Among the causes of longer delays are the following: traffic on the network, window sizes at network

nodes, traffic through the Ethernet Unit (e.g., socket servicing, FTP server communications, etc.), and the system configuration.

Example Calculations

The following example shows calculations for receiving 256 words between two PLC nodes using RECV(098). Calculations are shown in the following table:

Conditions

Local node CPU cycle time:	10 ms
Local node CPU processing mode:	Normal
Local node CPU uniform peripheral servicing time:	Default (4%)
Remote node CPU cycle time:	15 ms
Remote node CPU processing mode:	Normal
Remote node CPU uniform peripheral servicing time:	Default (4%)
Baud rate:	100Base-TX

Item	Calculations
CPU Bus Unit service cycle (local node 1)	10 ms
CPU Bus Unit service processing time (local node 1)	0.4 ms
Transmission processing time (command)	0.550 ms ≈ 0.5 ms
Transmission delay (command)	0.0118 ms ≈ 0.1 ms
Reception processing time (command)	0.704 ms ≈ 0.7 ms
CPU Bus Unit service cycle (remote node)	15 ms
CPU Bus Unit service processing time (remote node)	0.6 ms
Transmission processing time (response)	256 × 0.002 + 0.550 = 1.062 ≈ 1.1 ms
Transmission delay (response)	256 × 0.0013 + 0.0118 = 0.3446 ≈ 0.3 ms
Reception processing time (response)	256 × 0.003 + 0.704 = 1.472 ≈ 1.5 ms
CPU Bus Unit service cycle (local node 2)	10 ms
CPU Bus Unit service processing time (local node 2)	0.4 ms
Total	10 + 0.4 + 0.5 + 0.1 + 0.7 + 15 + 0.6 + 1.1 + 0.3 + 1.5 + 10 + 0.4 = 40.6 ms

6-7 Precautions on High Traffic in FINS Communications

When applications are constructed using FINS communications services, communications errors (from multiple response timeouts) may occasionally occur due to high traffic, depending on the system configuration and the application programs. This section describes precautions for systems with high traffic in FINS communications.

■ Conditions for High Traffic

High traffic may occur if FINS messages from multiple communicating nodes are concentrated at a single Ethernet Unit. The Ethernet Unit and the CPU Unit may have insufficient processing capacity for the volume of FINS messages (commands) that are coming from the network.

For example, suppose that approximately 20 ms are required to process a single FINS frame (i.e., 20 ms from the time that the command is received at the Ethernet Unit until a response is sent). If 100 or more FINS frames (commands) are received at once from multiple communicating nodes, it will take approximately 2 seconds to send a response to the last command. If a timeout is set at the remote node for 2 seconds or less, then a timeout will be generated. A retry will begin due to the timeout, and the traffic to the Ethernet Unit will thus be increased even further, until ultimately the responses to all the nodes will be too slow. At this point, the system is overloaded.

■ Avoiding Errors due to High Traffic

To avoid high traffic from FINS communications, the communications load must be kept down to a reasonable level. To accomplish this, follow the procedure below.

1. Specify the node where FINS frames seem to be concentrated.
2. Referring to *6-6-6 Transmission Delays*, estimate the total processing time for all of the FINS frames processed at that node.
3. Set the timeout value for all of the SEND(090), RECV(098), and CMND(490) FINS commands at all the remote nodes to at least 1.5 times the total processing time for all of the FINS frames.
4. As much as possible, implement communications traffic testing up to the point of actual system operation. If any problem occurs, adjust the traffic.
5. If a commercially-available protocol analyzer can be used, then the actual FINS frame processing time (i.e., the time from when a command is received at the Ethernet Unit until a response is sent) can be measured under high traffic conditions and the communications traffic can be further adjusted as required.

SECTION 7
FINS Commands Addressed to Ethernet Units

This section describes the FINS commands that can be sent to an Ethernet Unit and the responses that are returned by the Ethernet Unit.

7-1 Command Codes and Response Codes 158
7-1-1 Command Code List 158
7-1-2 Response Code List 158
7-2 Socket Applications 159
7-2-1 Format 159
7-2-2 PLC Memory Areas 160
7-3 Command/Response Reference 161
7-3-1 RESET 161
7-3-2 CONTROLLER DATA READ 162
7-3-3 CONTROLLER STATUS READ 163
7-3-4 INTERNODE ECHO TEST 165
7-3-5 BROADCAST TEST RESULTS READ 166
7-3-6 BROADCAST DATA SEND 166
7-3-7 ERROR LOG READ 167
7-3-8 ERROR LOG CLEAR 168
7-3-9 UDP OPEN REQUEST 169
7-3-10 UDP RECEIVE REQUEST 170
7-3-11 UDP SEND REQUEST 172
7-3-12 UDP CLOSE REQUEST 173
7-3-13 PASSIVE TCP OPEN REQUEST 174
7-3-14 ACTIVE TCP OPEN REQUEST 177
7-3-15 TCP RECEIVE REQUEST 180
7-3-16 TCP SEND REQUEST 181
7-3-17 TCP CLOSE REQUEST 183
7-3-18 PING 184
7-3-19 FINS/TCP CONNECTION REMOTE NODE CHANGE REQUEST 185
7-3-20 FINS/TCP CONNECTION STATUS READ 186
7-3-21 IP ADDRESS TABLE WRITE 187
7-3-22 IP ADDRESS WRITE 189
7-3-23 IP ADDRESS TABLE READ 189
7-3-24 IP ROUTER TABLE READ 191
7-3-25 PROTOCOL STATUS READ 192
7-3-26 MEMORY STATUS READ 196
7-3-27 SOCKET STATUS READ 198
7-3-28 ADDRESS INFORMATION READ 199
7-3-29 IP ADDRESS READ 200

7-1 Command Codes and Response Codes

7-1-1 Command Code List

The command codes listed in the following table can be sent to an Ethernet Unit.

Command code		Name	Page
MRC	SRC		
04	03	RESET	161
05	01	CONTROLLER DATA READ	162
06	01	CONTROLLER STATUS READ	163
08	01	INTERNODE ECHO TEST	165
	02	BROADCAST TEST RESULTS READ	166
	03	BROADCAST DATA SEND	166
21	02	ERROR LOG READ	167
	03	ERROR LOG CLEAR	168
27	01	UDP OPEN REQUEST	169
	02	UDP RECEIVE REQUEST	170
	03	UDP SEND REQUEST	172
	04	UDP CLOSE REQUEST	173
	10	PASSIVE TCP OPEN REQUEST	174
	11	ACTIVE TCP OPEN REQUEST	177
	12	TCP RECEIVE REQUEST	180
	13	TCP SEND REQUEST	181
	14	TCP CLOSE REQUEST	183
	20	PING	184
	30	FINS/TCP CONNECTION REMOTE NODE CHANGE REQUEST	185
	31	FINS/TCP CONNECTION STATUS READ	186
	50	IP ADDRESS TABLE WRITE	187
	57	IP ADDRESS WRITE (CJ Series only)	189
	60	IP ADDRESS TABLE READ	189
	61	IP ROUTER TABLE READ	191
	62	PROTOCOL STATUS READ	192
	63	MEMORY STATUS READ	196
	64	SOCKET STATUS READ	198
	65	ADDRESS INFORMATION READ	199
	67	IP ADDRESS READ	200

7-1-2 Response Code List

Response codes are 2-byte codes which indicate the results of command execution. They are returned in the response following the command code.

The first byte of a response code is the MRES (main response code), which categorizes the results of command execution. The second byte is the SRES (sub-response code) which specifies the results.

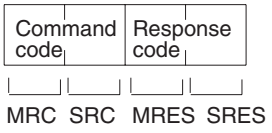

MRC: Main request code
SRC: Sub-request code
MRES: Main response code
SRES: Sub-response code

The MRES codes are shown in the following table along with the results they indicate. Refer to *8-4-7 Troubleshooting with Response Codes* for details on response codes including the SRES.

MRES	Execution results
00	Normal completion
01	Local node error
02	Remote node error
03	Unit error (controller error)
04	Service not supported
05	Routing error
10	Command format error
11	Parameter error
22	Status error
23	Operating environment error
25	Unit error

7-2 Socket Applications

The format of the following FINS commands partially differs when the sockets are used.

Command code		Name	Page
MRC	SRC		
27	01	UDP OPEN REQUEST	169
	02	UDP RECEIVE REQUEST	170
	03	UDP SEND REQUEST	172
	04	UDP CLOSE REQUEST	173
	10	PASSIVE TCP OPEN REQUEST	174
	11	ACTIVE TCP OPEN REQUEST	177
	12	TCP RECEIVE REQUEST	180
	13	TCP SEND REQUEST	181
	14	TCP CLOSE REQUEST	183

7-2-1 Format

The basic format of these commands is shown in the diagram below.

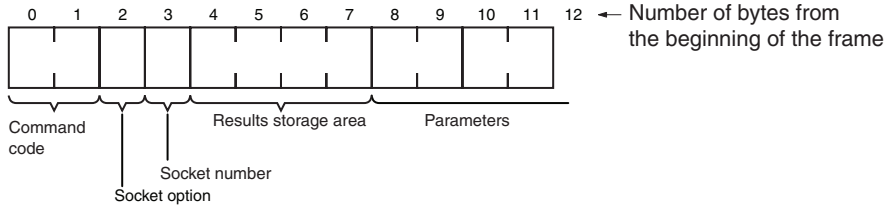

Command Code Specifies the requested process.

Socket Option For the TCP OPEN REQUEST (ACTIVE or PASSIVE), specifies whether or not the keep-alive function is to be used. For all other commands it is disabled. (Set to 0).

Socket Number Specifies the socket number for which the process is requested, from 1 to 8.

Results Storage Area Specifies the area to store the results of the requested process.

Parameters

Specifies the parameters for the command code. Parameters depend on the command being executed; for details, refer to the following pages.

7-2-2 PLC Memory Areas

The memory areas of the PLC that can be specified for results storage when executing commands from the PC are listed in the table below. The *Variable type* is set in the first byte of the results storage area. The remaining three bytes contain the address for communications.

Addresses in the *Addresses for communications* column are not the same as the actual memory addresses.

Memory area	Data type		Word addresses	Addresses for communications	Variable type	Bytes
Bit Areas	Current value of word	CIO	CIO 0000 to CIO 6143	000000 to 17FF00	B0 (80)*	2
		HR	H000 to H511	000000 to 01FF00	B2	
		AR	A448 to A959	01C000 to 03BF00	B3	
DM Area		DM	D00000 to D32767	000000 to 7FFF00	82	2
EM Area		Bank 0	E0_E00000 to E0_E32767	000000 to 7FFF00	A0 (90)*	2
		Bank 1	E1_E00000 to E1_E32767	000000 to 7FFF00	A1 (91)*	
		Bank 2	E2_E00000 to E2_E32767	000000 to 7FFF00	A2 (92)*	
		Bank 3	E3_E00000 to E3_E32767	000000 to 7FFF00	A3 (93)*	
		Bank 4	E4_E00000 to E4_E32767	000000 to 7FFF00	A4 (94)*	
		Bank 5	E5_E00000 to E5_E32767	000000 to 7FFF00	A5 (95)*	
		Bank 6	E6_E00000 to E6_E32767	000000 to 7FFF00	A6 (96)*	
		Bank 7	E7_E00000 to E7_E32767	000000 to 7FFF00	A7 (97)*	
		Bank 8	E8_E00000 to E8_E32767	000000 to 7FFF00	A8	2
		Bank 9	E9_E00000 to E9_E32767	000000 to 7FFF00	A9	2
		Bank A	EA_E00000 to EA_E32767	000000 to 7FFF00	AA	2
		Bank B	EB_E00000 to EB_E32767	000000 to 7FFF00	AB	2
		Bank C	EC_E00000 to EC_E32767	000000 to 7FFF00	AC	2
		Current bank	E00000 to E32767	000000 to 7FFF00	98	2

Note The variable types (area designations) given in parentheses can also be used, allowing CV-series or CVM1 programs to be more easily corrected for use with CS/CJ-series PLCs.

Word and Bit Addresses

Three bytes of data are used to express data memory addresses of PLCs. The most significant two bytes give the word address and the least significant byte gives the bit number between 00 and 15.

The word address combined with the bit number expresses the bit address. The bit number is always 00 because Ethernet Units can handle only word data, i.e., individual bits cannot be addressed.

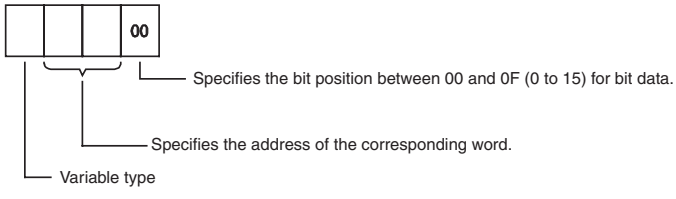

Word addresses for specific memory area words can be calculated by converting the normal decimal word address to hexadecimal and adding it to the first word in the *Addresses for communications* column in the above table. For example, the address for communications for D00200 would be 0000 (from above table) plus C8 (decimal 200 converted to hexadecimal), or 00C8.

7-3 Command/Response Reference

This section describes the FINS commands that can be sent to Ethernet Units and the responses to each command.

The command, response, and (where applicable) the results storage blocks are given with the commands in graphic form as shown in the following diagram. If the data is fixed, it is included in the blocks. If the data is variable, it is described following the blocks. Each box represents 1 byte; every two boxes represents 1 word. The following diagram shows 2 bytes, or 1 word.

Two bytes

The results storage format is the format used to store transfer results and data for socket services requested with command codes 2701 to 2714.

Response codes applicable to the command are described at the end of the command description. If any UNIX error codes are generated, these are also described. Refer to your UNIX error symbol definition file /usr/include/sys/errno.h for details. UNIX errors are returned in the results storage area.

Note Except for special cases, all send/receive data is in hexadecimal format.

7-3-1 RESET

Reset the Ethernet Unit.

Command Block

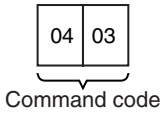

Response Block

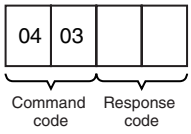

Precautions

No response will be returned if the command ends normally. A response will be returned only if an error occurs.

In some cases, send requests (SEND(192)/RECV(193) instructions) made from the PLC to the Ethernet Unit just before execution of the RESET command may not be executed.

Except for the FINS communications service sockets, all open sockets (for sockets services, FTP server, or mail transmission) are closed immediately before resetting.

Response Codes

Response code	Description
1001	Command too large

7-3-2 CONTROLLER DATA READ

Reads the following data from the Ethernet model, version, IP address, subnet mask, FINS UDP port number, mode settings, Ethernet address.

Command Block

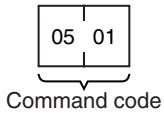

Response Block

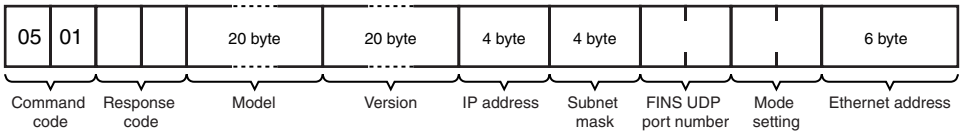

Parameters

Model, Version (Response)

The Ethernet Unit mode and version are returned as ASCII characters occupying 20 bytes each (i.e., 20 characters each). If all bytes are not used, the remaining bytes will be all spaces (ASCII 20 Hex).

Example Model: CS1W-ETN21, CJ1W-ETN21
Version: V1.50

IP Address, Subnet Mask (Response)

The Ethernet Unit's IP address and subnet mask are returned as 4 bytes each.

FINS UDP Port Number (Response)

The Ethernet Unit's UDP port number for FINS is returned as 2 bytes.

Mode Setting (Response)

The mode setting in the system setup is returned.

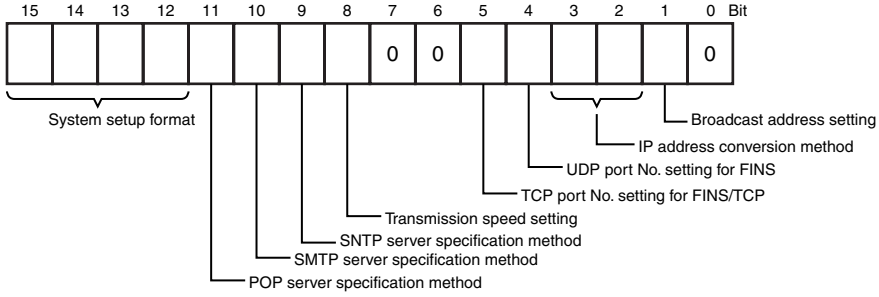

Broadcast Address Setting

0: Broadcast with host number set to all ones (4.3BSD specifications)

1: Broadcast with host number set to all zeroes (4.2BSD specifications)

IP Address Conversion Method Setting

00, 01: Automatic generation method

10: IP address table reference method

11: Combined method (IP address table reference + automatic generation)

FINS/UDP Port Number Setting

0: Default (9600)

1: Unit Setup value

FFINS/TCP Port Number Setting

0: Default (9600)

1: Unit Setup value

Baud Rate setting

0: Automatic detection

1: 10Base-T

SNTP Server Specification Method

0: IP address

1: Host name

SMTP Server Specification Method

0: IP address

1: Host name

POP Server Specification Method

0: IP address

1: Host name

System Setup Format

Bit address				Format classification
15	14	13	12	
0	0	0	0	ETN11 mode
0	0	0	1	ETN21 mode
Other				Reserved

Ethernet Address (Response)

The Ethernet address of the Ethernet Unit is returned. The Ethernet address is the address marked on the label on the side of the Ethernet Unit.

Response Codes

Response code	Description
0000	Normal
1001	Command too large

7-3-3 CONTROLLER STATUS READ

Reads the controller status.

Command Block

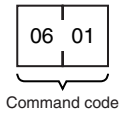

Response Block

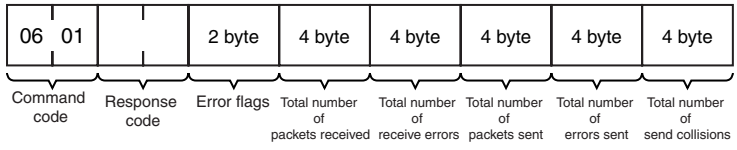

Parameters

Error Flags (Response)

Indicates the operating status and errors that occurred when the Ethernet Unit was started.

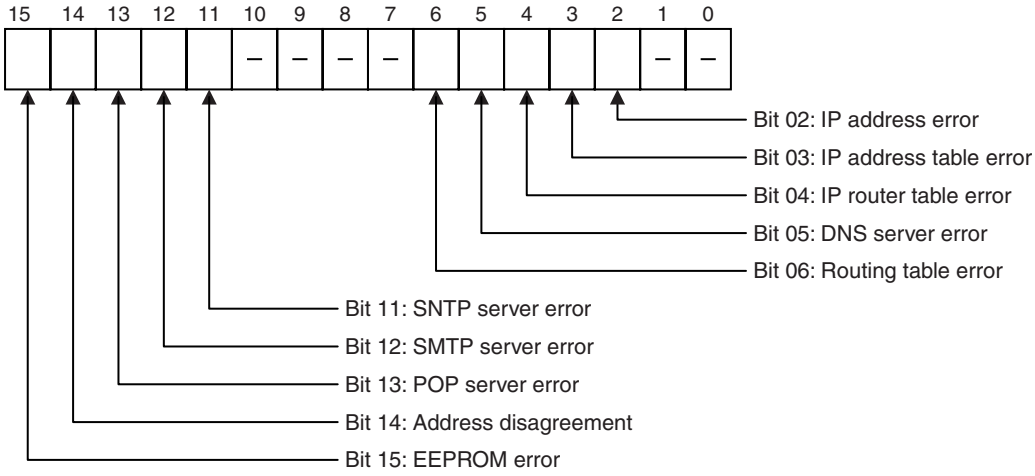

The cause of each error is listed below.

IP Address Error

All bits for the network number or host number are set to 0 or 1.

IP Address Table Error

More than 32 records exist in the IP address table.

IP Router Table Error

More than 8 records exist in an IP router table.

DNS Server Error

- There is an error in the IP address setting for the DNS server.
- A timeout was generated in communications with the DNS server.

Routing Table Error

Local network table contains 0 or more than 16 records.
Relay network table contains more than 20 records.

SNTP Server error

- There is an error in the setting for the SNTP server host specification (i.e., the IP address or the host name).
- A timeout was generated in communications with the SNTP server.

SMTP Server error

- There is an error in the setting for the SMTP server host specification (i.e., the IP address or the host name).
- A timeout was generated in communications with the SMTP server.
- The time for verification from the POP server elapsed (when POP before SMTP was set).

POP Server Error

- There is an error in the setting for the POP server host specification (i.e., the IP address or the host name).
- An error occurred in the POP server verification (i.e., a user name or password setting error).
- A timeout was generated in communications with the POP server.

Address Disagreement

The address conversion method was set for automatic generation, but the node address and the last byte of the local IP address do not agree, or other host sections are 0.

EEPROM Error

An error occurred in the EEPROM memory in the Ethernet Unit.

Total Number of Packets Received (Response)

The total number of packets received by the Ethernet Unit is returned.

Total Number of Receive Errors (Response)

The total number of errors detected while the Ethernet Unit was receiving is returned. The types of error detected are short packet errors, alignment errors, CRC errors, frame length errors (received frame: 1,515 bytes or more), and communications controller overflow errors.

Total Number of Packets Sent (Response)

The total number of packets sent by the Ethernet Unit is returned.

Total Number of Errors Sent (Response)

The total number of packet errors detected while the Ethernet Unit was sending is returned.

Total Number of Send Collisions (Response)

The number of packets damaged by 16 collisions with data from other nodes during Ethernet Unit transmissions.

Precautions

Counting of the total number of packets received, total number of receive errors, total number of packets sent, total number of errors sent, and total number of send collisions is discontinued when the counted value reaches the maximum value.

Response Codes

Response code	Description
0000	Normal
1001	Command too large

7-3-4 INTERNODE ECHO TEST

Runs the echo test between specified nodes.

Command Block

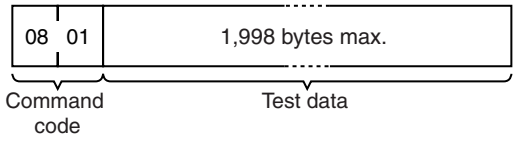

Response Block

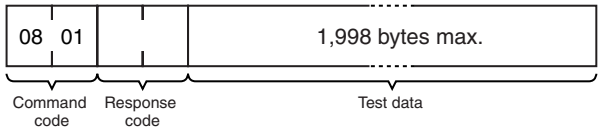

Parameters

Test Data (Command, Response)

This command specifies the data to be sent to the specified nodes. Up to 1,998 bytes can be specified. The response sends back data identical to the data specified in the command. An abnormality is assumed if the data returned in the response differs from the test data sent.

Precautions

The test destination node is the destination node specified in the CMND(194) instruction operands.

Always specify the unit address of the Ethernet Unit in the CMND(194) instruction.

Response Codes

Response code	Description
0000	Normal
1001	Command too large
1002	Command too small (No test data)

7-3-5 BROADCAST TEST RESULTS READ

Reads the results (number of times data received) of the broadcast test.

Command Block

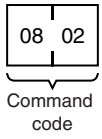

Response Block

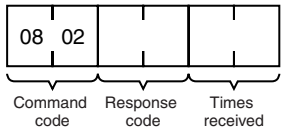

Parameters

Times Received (Response)

The number of times the data has been received normally during the broadcast send test is returned as a hexadecimal number. The number of times received is cleared each time the result is read.

Response Codes

Response code	Description
0000	Normal
1001	Command too large

7-3-6 BROADCAST DATA SEND

Sends test data simultaneously to all nodes on the network.

Command Block

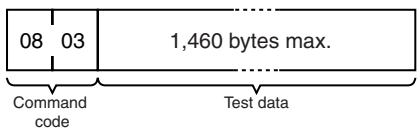

Parameters

Test Data (Command)

This command specifies the data to be sent to the specified nodes. Up to 1,460 bytes can be specified.

Precautions

No response is made to this command.

When using this command, set the FINS header parameters (or the control data for the CMND(194) instruction) as follows:

Destination node address:	FF (broadcast data)
Destination unit address:	FE (Ethernet Unit)
Response/no response flag:	1 (no response)

7-3-7 ERROR LOG READ

Reads the error log.

Command Block

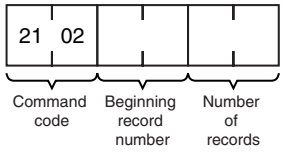

Response Block

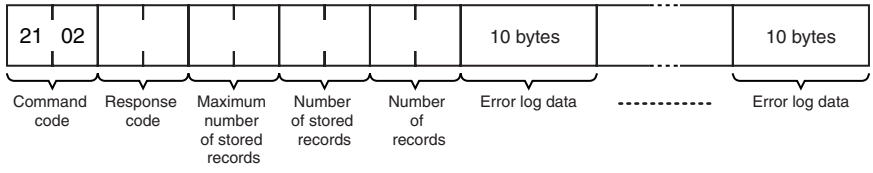

Parameters

Beginning Record Number (Command)

The first record to be read. The first record number can be specified in the range between 0000 and 003F (0 to 63 decimal) where 0000 is the oldest record.

Number of Records (Command, Response)

The number of records to read is specified between 0001 and 0040 (1 to 64 decimal) in the command. The response returns the actual number of records read.

Maximum Number of Stored Records (Response)

The maximum number of records that can be stored in the error log. Care is required as the error log differs according to the type of PC or CPU Bus Unit. In an Ethernet Unit, the maximum number of stored records is fixed at 40 (64 decimal).

Number of Stored Records (Response)

The number of records stored at the time the command is executed is returned.

Error Log Data (Response)

The specified number of error log records from the beginning record number is returned sequentially. The total number of bytes in the error log is calculated as the number of records x 10 bytes/record. Each error log record thus comprises 10 bytes, configured as follows:

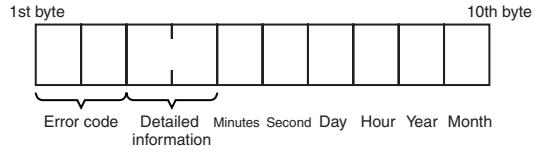

Error Code, Detailed Information

Details of the error stored in the record. Refer to *8-3-1 Error Log Error Codes* for details.

Minute, Second, Day, Hour, Year, Month

Indicate the time at which the error stored in the record occurred.

Precautions

If the error log contains fewer records than the number specified in the number of records parameter, all records stored in the error log at the time the command is executed will be returned and the command executed will end normally.

Response Codes

Response code	Description
0000	Normal
1001	Command too large
1002	Command too small
1103	Beginning record number is out of range
110C	The number of read records is 0.

7-3-8 ERROR LOG CLEAR

Clears the number of records stored in the Ethernet Unit error log.

Command Block

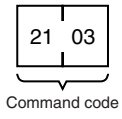

Response Block

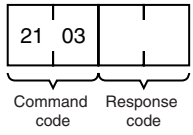

Response Codes

Response code	Description
0000	Normal
1001	Command too large

7-3-9 UDP OPEN REQUEST

Requests processing to open a socket.

Command Block

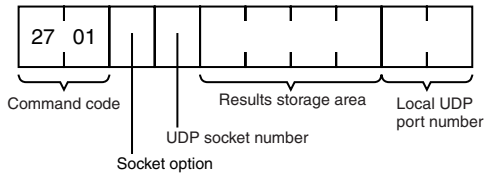

Response Block

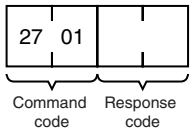

Results Storage Format

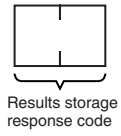

Parameters

Socket Option (Command)

The socket option specified as 1 byte. The setting is not valid for this command. Set to 0.

UDP Socket Number (Command)

The UDP socket number to be opened specified as 1 byte between 1 and 8.

Results Storage Area (Command)

The area in which the results of the command execution are stored. The first byte specifies the memory area and data type (variable type). The 2nd to 4th bytes specify the beginning address of the results storage area. Refer to page 160 for details about the variable types and addresses that can be specified.

Local UDP Port Number (Command)

The UDP port number for communications with the socket is specified as 2 bytes (0 cannot be specified). Packets received at this port are distributed to the socket specified in the UDP socket number, and send packets are distributed from the UDP socket to this port.

The following ports for the Ethernet Unit's communications services cannot be specified.

- UDP port No. used for FINS (Default: 9600)
- UDP port No. used for DNS server access (Default: 53)
- UDP port No. used for SNTP server access (Default: 123)

Response Codes

Response code	Description
0000	Normal
0105	Local IP address setting error
0302	CPU Unit error; execution not possible.
1001	Command too large

Response code	Description
1002	Command too small.
1100	UDP socket number is out of range. Local UDP port number is 0.
1101	The variable type for the results storage area is out of range.
1103	Non-zero bit address specified for the results storage area.
220F	Specified socket is already open or is being closed.
2211	High traffic at Unit; cannot execute service.
2240	Socket service mode is incorrect; cannot execute service. (With unit version 1.5 or later, the high-speed socket service option was enabled and a socket service was used with a CMND(490) instruction.)

Results Storage Area Response Codes

Response code	Description
0000	Normal
003E	Internal buffer cannot be reserved due to high receive load (ENOBUFS).
0049	Duplicate UDP port number (EADDRINUSE).

7-3-10 UDP RECEIVE REQUEST

Requests that data be sent from a UDP socket.

Command Block

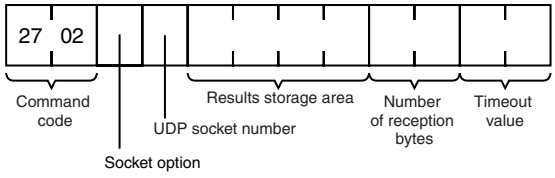

Response Block

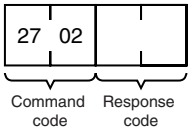

Results Storage Format

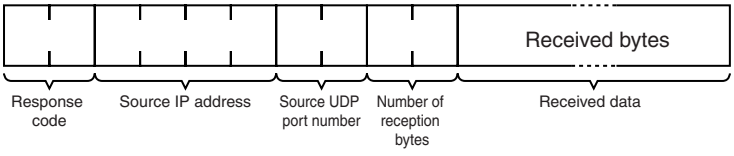

Parameters

Socket Option (Command) The socket option specified as 1 byte. The setting is not valid for this command. Set to 0.

UDP Socket Number (Command) The UDP socket number to receive data specified as 1 byte between 1 and 8.

Results Storage Area (Command)

The area in which the results of the command execution are stored. The first byte specifies the memory area and data type (variable type). The 2nd to 4th bytes specify the beginning address of the results storage area. Refer to page 160 for details about the variable types and addresses that can be specified.

Number of Reception Bytes (Command, Results Storage Area)

The maximum number of bytes of data to be received is given in the command. The number of bytes of data received will be stored in the results storage area. Up to 1,984 bytes can be specified.

Timeout Value (Command)

The maximum control time between receiving the receive request and storing the result. If this set time limit is exceeded, the code for a timeout error will be set as the results storage response code. The value is set in units of 0.1 s. The timeout time will be unlimited if the value is set to 0.

Source IP Address (Results Storage Area)

The IP address of the node sending data is stored in hexadecimal.

Source UDP Port Number (Results Storage Area)

The port number of the node sending data.

Received Data (Results Storage Area)

The data sent from the remote node.

Precautions

If a packet is received which contains more bytes than the number specified in *Number of reception bytes* specified in the command, the specified number of bytes will be stored and the remainder of the bytes will be discarded.

Response Codes

Response code	Description
0000	Normal
0105	IP address setting error
0302	CPU Unit error; execution not possible.
1001	Command too large
1002	Command too small
1100	UDP socket number or number of reception bytes is out of range.
1101	The variable type for the results storage area is out of range.
1103	Non-zero bit address specified for the results storage area.
220F	The specified socket is currently receiving data.
2210	The specified socket is not open.
2211	High traffic at Unit; cannot execute service.
2240	Socket service mode is incorrect; cannot execute service. (With unit version 1.5 or later, the high-speed socket service option was enabled and a socket service was used with a CMND(490) instruction.)

Results Storage Area Response Codes

Response code	Description
0000	Normal
003E	Internal buffer cannot be reserved due to high reception load (ENOBUFS).
0066	Internal memory cannot be allocated; cannot execute service.
0080	A receive request timeout error occurred.
0081	The specified socket was closed while receiving data.

7-3-11 UDP SEND REQUEST

Requests that data be received by a UDP socket.

Command Block

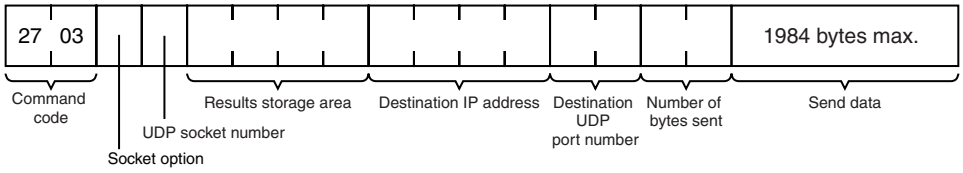

Response Block

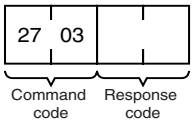

Results Storage Format

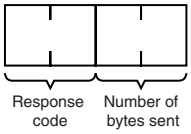

Parameters

Socket Option (Command)
The socket option specified as 1 byte. The setting is not valid for this command. Set to 0.

UDP Socket Number (Command)
The UDP socket number to send the data specified as 1 byte between 1 and 8.

Results Storage Area (Command)
The area in which the result of the command execution is stored. The first byte specifies the memory area and data type (variable type). The 2nd to 4th bytes specify the beginning address of the results storage area. Refer to page 160 for details about the variable types and addresses that can be specified.

Destination IP Address (Command)
The IP address of the node to which data is being sent is specified in hexadecimal.

Destination UDP Port Number (Command)
The UDP port number of the node to which data is being sent.

Number of Bytes Sent (Command, Results Storage Area)
The number of bytes in the data sent by this command. Up to 1,984 bytes can be specified, or up to 1,472 bytes can be specified if the broadcast address is specified as the send destination. The results storage area stores the actual number of bytes sent.

Send Data (Command)
Specifies the data sent to the remote node.

Response Codes

Response code	Description
0000	Normal
0105	Local IP address setting error
0302	CPU Unit error; execution not possible.
1001	Command too large
1002	Command too small

Response code	Description
1003	The number of bytes sent does not match the sent data length.
1100	UDP socket number or number of bytes sent is out of range. The destination IP address is 0. Local UDP port number is 0.
1101	The variable type for the results storage area is out of range.
1103	Non-zero bit address specified for the results storage area.
220F	Specified socket is currently sending.
2210	The specified socket is not open.
2211	High traffic at Unit; cannot execute service.
2240	Socket service mode is incorrect; cannot execute service. (With unit version 1.5 or later, the high-speed socket service option was enabled and a socket service was used with a CMND(490) instruction.)

Results Storage Area Response Codes

Response code	Description
0000	Normal
003E	Internal buffer cannot be reserved due to high reception load (ENOBUFS).
0042	The send destination IP address is a broadcast address and the number of bytes sent exceeds 1,472. (EMSGSIZE)
004C	Incorrect network number. Incorrect destination IP address (EADDRNOTAVAIL).
004E	Incorrect destination IP address (ENETUNREACH). No network number in IP router table. Router incorrectly set.
0051	Router incorrectly specified. Incorrect destination IP address (EHOSTUNREACH).

7-3-12 UDP CLOSE REQUEST

Requests processing to close a socket.

Command Block

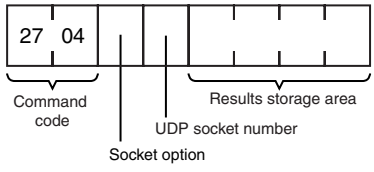

Response Block

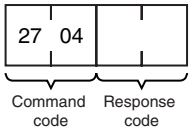

Results Storage Format

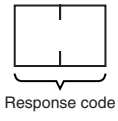

Parameters

Socket Option (Command)
The socket option specified as 1 byte. The setting is not valid for this command. Set to 0.

UDP Socket Number (Command)
The UDP socket number to be closed specified as 1 byte between 1 and 8.

Results Storage Area (Command)
The area in which the results of the command execution are stored. The first byte specifies the memory area and data type (variable type). The 2nd to 4th bytes specify the beginning address of the results storage area. Refer to page 160 for details about the variable types and addresses that can be specified.

Response Codes

Response code	Description
0000	Normal
0105	Local IP address setting error
0302	CPU Unit error; execution not possible.
1001	Command too large
1002	Command too small
1100	UDP socket number is out of range.
1101	The variable type for the results storage area is out of range.
1103	Non-zero bit address specified for the results storage area.
2210	Specified socket is not open.
2211	High traffic at Unit; cannot execute service.
2240	Socket service mode is incorrect; cannot execute service. (With unit version 1.5 or later, the high-speed socket service option was enabled and a socket service was used with a CMND(490) instruction.)

Results Storage Area Response Codes

Response code	Description
0000	Normal

7-3-13 PASSIVE TCP OPEN REQUEST

Requests processing to open a TCP socket. The socket will wait to be connected to another node.

Command Block

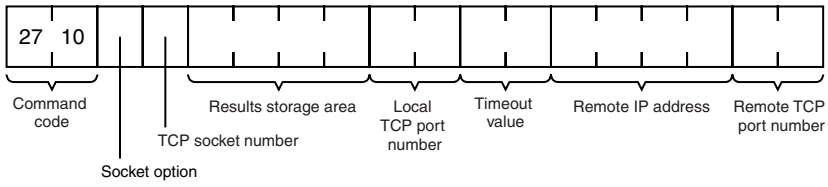

Response Block

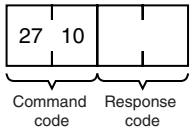

Results Storage Format

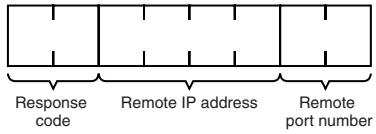

Parameters

Socket Option (Command)

The socket option is specified in one byte.

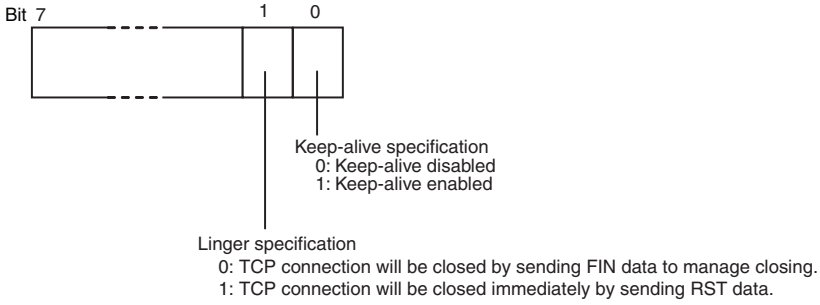

Note

(1) Starting with unit version 1.5, it is possible to specify the linger option.

(2) If the linger option is not specified and a TCP connection is closed, FIN data will be sent and then approximately 1 minute will be used to confirm the transmission and perform other closing management with the remote node. Therefore, it may not be possible to immediately use TCP sockets with the same port number.

(3) In contrast, when the linger option is specified, RST data will be sent when TCP is closed, and closing will be performed immediately. This enables immediately opening TCP sockets with the same port number. Data that was sent immediately before closing, however, is not checked for transmission to the remote node. If the linger option is specified, ensure the arrival of the send data in the application.

TCP Socket Number (Command)

The TCP socket number to be opened specified as 1 byte between 1 and 8.

Results Storage Area (Command)

The area in which the results of the command execution are stored. The first byte specifies the memory area and data type (variable type). The 2nd to 4th bytes specify the beginning address of the results storage area. Refer to page 160 for details about the variable types and addresses that can be specified.

Local TCP Port Number (Command)

The TCP port number for communications with the socket is specified as 2 bytes (0 cannot be specified).

The following ports used for the Ethernet Unit's communications services cannot be specified.

- TCP port No. used for FTP server (Default: 20, 21)
- TCP port No. used for DNS server access (Default: 53)
- TCP port No. used for SMTP server access (Default: 25)
- TCP port No. used for POP server access (Default: 110)
- TCP port No. used for HTTP server (Default: 80)

Timeout Value (Command)

The maximum control time between receiving the open request and storing the result. If this set time limit is exceeded, the code for a timeout error will be set as the results storage response code. The value is set in units of 0.1 s. The timeout time is unlimited if the value is set to 0.

Remote IP Address (Command, Results Storage Area)

Specify the remote node's IP address. If all zeroes are set, no remote node is specified and connection is awaited from any node. If any other value is set, connection is awaited from the specified remote node. The IP address of the connected remote node will be stored in the results storage area.

Remote Port Number (Command, Results Storage Area)

Specify the remote TCP port number with this command. If all zeroes are set, no remote TCP port number is specified. If any other value is set, it specifies the TCP port number of the remote node. The TCP port number of the connected remote node will be stored in the results storage area.

Precautions

Processing varies as shown in the table below according to the specified combination of remote IP address and remote TCP port number.

Remote IP address	Remote TCP port	Description
0	0	All connection requests received
0	Not 0	Received only when port number matches.
Not 0	0	Received only when IP address matches.
Not 0	Not 0	Received only when IP address and port number matches.

Response Codes

Response code	Description
0000	Normal
0105	Local IP address setting error
0302	CPU Unit error; execution not possible.
1001	Command too large
1002	Command too small
1100	TCP socket number is out of range. Local TCP port number is 0.
1101	The variable type for the results storage area is out of range.
1103	Non-zero bit address specified for the results storage area.
220F	The specified socket (connection) is already open or is currently being opened.
2211	High traffic at Unit; cannot execute service.
2240	Socket service mode is incorrect; cannot execute service. (With unit version 1.5 or later, the high-speed socket service option was enabled and a socket service was used with a CMND(490) instruction.)

Results Storage Area Response Codes

Response code	Description
0000	Normal
003E	Internal buffer cannot be reserved due to high reception load (ENOBUFS).
0042 (see note)	An error occurred (EMSGSIZE).
0045	A communication error occurred with the remote node (ECONNABORTED).

Response code	Description
0049	Duplicated port numbers (EADDRINUSE).
004A (see note)	An error occurred (ECONNREFUSED).
004B (see note)	A communication error occurred with the remote node (ECONNRESET).
004E (see note)	A parameter error occurred at the remote IP address (ENETUNREACH).
0051 (see note)	A parameter error occurred at the remote IP address (EHOSTUNREACH).
0053	A communication error occurred with the remote node (ETIMEDOUT). No remote exists.
0066	Internal memory cannot be allocated; cannot execute service.
0080	An open request timeout error occurred.
0081	Socket was closed during opening procedure.
0082	Connection could not be established with the specified remote.

Note These errors occur only in large multilayered networks.

7-3-14 ACTIVE TCP OPEN REQUEST

Requests processing to open a TCP socket. The socket will be connected to another node.

Command Block

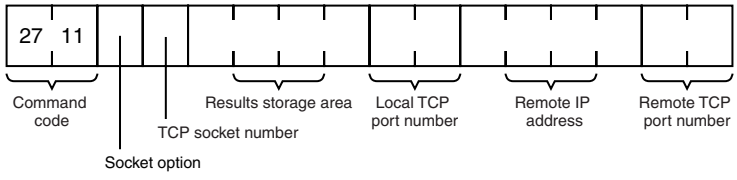

Response Block

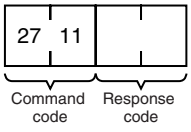

Results Storage Format

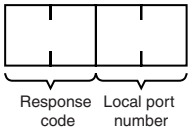

Parameters

Socket Option (Command) The socket option is specified in one byte.

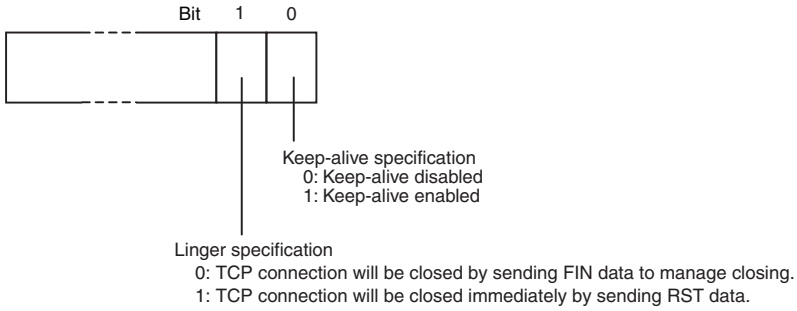

Note

(1) Starting with unit version 1.5, it is possible to specify the linger option.

(2) If the linger option is not specified and a TCP connection is closed, FIN data will be sent and then approximately 1 minute will be used to confirm the transmission and perform other closing management with the remote node. Therefore, it may not be possible to immediately use TCP sockets with the same port number.

(3) In contrast, when the linger option is specified, RST data will be sent when TCP is closed, and closing will be performed immediately. This enables immediately opening TCP sockets with the same port number. Data that was sent immediately before closing, however, is not checked for transmission to the remote node. If the linger option is specified, ensure the arrival of the send data in the application.

TCP Socket Number (Command)

The TCP socket number to be opened specified as 1 byte between 1 and 8.

Results Storage Area (Command)

The area in which the results of the command execution are stored. The first byte specifies the memory area and data type (variable type). The 2nd to 4th bytes specify the beginning address of the results storage area. Refer to page 160 for details about the variable types and addresses that can be specified.

Local TCP Port Number (Command, Results Storage Area)

The TCP port number for communications with the socket is specified as 2 bytes. An available TCP port number is automatically assigned if 0 is specified.

The TCP port numbers allocated to the open socket are stored in the Results Storage Area.

The following ports used for the Ethernet Unit's communications services cannot be specified.

- TCP port No. used for FTP server (Default: 20, 21)
- TCP port No. used for DNS server access (Default: 53)
- TCP port No. used for SMTP server access (Default: 25)
- TCP port No. used for POP server access (Default: 110)
- TCP port No. used for HTTP server (Default: 80)

Remote IP Address (Command)

Specify the remote node's IP address (must be non-zero) in hexadecimal.

Remote Port Number (Command)

Specify the remote TCP port number (must be non-zero).

Response Codes

Response code	Description
0000	Normal
0105	Local IP address setting error
0302	CPU Unit error; execution not possible.
1001	Command too large
1002	Command too small
1100	TCP socket number is out of range. Remote IP address or the remote TCP port number is 0.
1101	The variable type for the results storage area is out of range.
1103	Non-zero bit address specified for the results storage area.
220F	The specified socket (connection) is already open or is being opened.
2211	High traffic at Unit; cannot execute service.
2240	Socket service mode is incorrect; cannot execute service. (With unit version 1.5 or later, the high-speed socket service option was enabled and a socket service was used with a CMND(490) instruction.)

Results Storage Area Response Codes

Response code	Description
0000	Normal
000D	A parameter error occurred at the remote IP address (EACCES).
003E	Internal buffer cannot be reserved due to high receive load (ENOBUFS).
0042 (see note)	An error occurred (EMSGSIZE).
0044	Received ICMP data (ENOPROTOOPT).
0045	Local socket closed (ECONNABORTED).
0049	Duplicated port numbers (EADDRINUSE).
004A	An error occurred (ECONNREFUSED). Passive remote is not available.
004B (see note)	A communication error occurred with the remote node (ECONNRESET).
004C	A parameter error occurred at the remote IP address (EADDRNOTAVAIL). A parameter was specified incorrectly. An attempt was made to actively open local TCP port.
004E	A parameter error occurred at the remote IP address (ENETUNREACH). No network number in IP router table or incorrect router setting.
0051	A parameter error occurred at the remote IP address (EHOSTUNREACH). Incorrect router setting.
0053	A communication error occurred with the remote node (ETIMEDOUT). No remote exists.
0081	Socket was closed during opening procedure.

Note These errors occur only in large multilayered networks.

7-3-15 TCP RECEIVE REQUEST

Requests that data be sent from a TCP socket.

Command Block

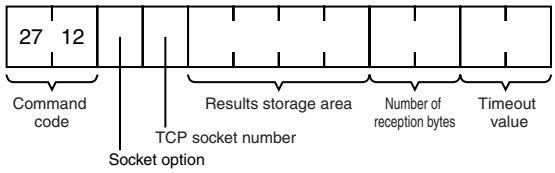

Response Block

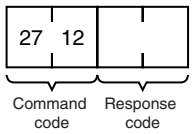

Results Storage Format

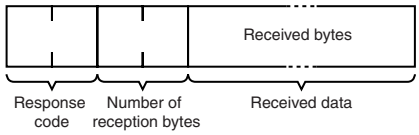

Parameters

Socket Option (Command)
The socket option specified as 1 byte. The setting is not valid for this command. Set to 0.

TCP Socket Number (Command)
The TCP socket number to receive data specified as 1 byte between 1 and 8.

Results Storage Area (Command)
The area in which the results of the command execution are stored. The first byte specifies the memory area and data type (variable type). The 2nd to 4th bytes specify the beginning address of the results storage area. Refer to page 160 for details about the variable types and addresses that can be specified.

Number of Reception Bytes (Command, Results Storage Area)
The maximum number of bytes of data to be received is given in the command. The number of bytes of data received will be stored in the results storage area. Up to 1,984 bytes can be specified.

Timeout Value (Command)
The maximum control time between receiving the receive request and storing the result. If this set time limit is exceeded, the code for a timeout error will be set as the results storage response code. The value is set in units of 0.1 s. The timeout time is unlimited if the value is set to 0.

Received Data (Results Storage Area)
Stores the received data.

Response Codes

Response code	Description
0000	Normal
0105	Local IP address setting error
0302	CPU Unit error; execution not possible.
1001	Command too large
1002	Command too small
1100	TCP socket number or number of reception bytes is out of range.
1101	The variable type for the results storage area is out of range.
1103	Non-zero bit address specified for the results storage area.
220F	The specified socket is receiving data.
2210	No connection could be established to the specified socket.
2211	High traffic at Unit; cannot execute service.
2240	Socket service mode is incorrect; cannot execute service. (With unit version 1.5 or later, the high-speed socket service option was enabled and a socket service was used with a CMND(490) instruction.)

Results Storage Area Response Codes

Response code	Description
0000	Normal
003E	Internal buffer cannot be reserved due to high receive load (ENOBUFS).
0042 (see note)	Received ICMP data (EMSGSIZE).
0044 (see note)	Received ICMP data (ENOPROTOOPT).
0045 (see note)	A communication error occurred with the remote node (ECONNABORTED).
004B	A communication error occurred with the remote node (ECONNRESET).
004E (see note)	Incorrect destination IP address (ENETUNREACH). No network number in IP router table. Router incorrectly set.
004F (see note)	Received ICMP data (EHOSTDOWN).
0051 (see note)	Received ICMP data (EHOSTUNREACH). Router incorrectly set.
0053	A communications error occurred with the remote node (ETIMEDOUT).
0066	Internal memory cannot be allocated; cannot execute service.
0080	A receive request timeout error occurred.
0081	Socket was closed while receiving.

Note These errors occur only in large multilayered networks.

7-3-16 TCP SEND REQUEST

Requests that data be received at a TCP socket.

Command Block

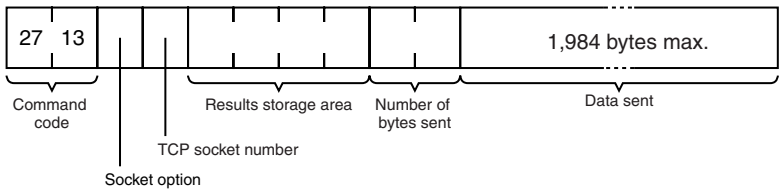

Response Block

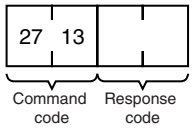

Results Storage Format

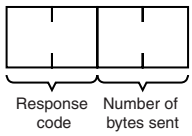

Parameters

Socket Option (Command)

The socket option specified as 1 byte. The setting is not valid for this command. Set to 0.

TCP Socket Number (Command)

The TCP socket number to send the data specified as 1 byte between 1 and 8.

Results Storage Area (Command)

The area in which the results of the command execution are stored. The first byte specifies the memory area and data type (variable type). The 2nd to 4th bytes specify the beginning address of the results storage area. Refer to page 160 for details about the variable types and addresses that can be specified.

Number of Bytes Sent (Command, Results Storage Area)

The number of bytes in the data sent specified between 0 and 1,984. The results storage area stores the actual number of bytes sent.

Data Sent (Command)

Specifies the data to be sent.

Response Codes

Response code	Description
0000	Normal
0105	Local IP address setting error
0302	CPU Unit error; execution not possible.
1001	Command too large
1002	Command too small
1003	The number of bytes sent does not match the amount of data.
1100	The TCP socket number or number of bytes sent is out of range.
1101	The variable type for the results storage area is out of range.
1103	Non-zero bit address specified for the results storage area.
220F	The specified socket is sending data.
2210	No connection could be established to the specified socket.

Response code	Description
2211	High traffic at Unit; cannot execute service.
2240	Socket service mode is incorrect; cannot execute service. (With unit version 1.5 or later, the high-speed socket service option was enabled and a socket service was used with a CMND(490) instruction.)

Results Storage Area Response Codes

Response code	Description
0000	Normal
0020	Connection to the remote socket was broken during transmission (EPIPE).
003E	Internal buffer cannot be reserved due to high receive load (ENOBUFS).
0042 (see note)	An error occurred (EMSGSIZE).
0044 (see note)	Received ICMP data (ENOPROTOOPT).
0045 (see note)	A communication error occurred with the remote node (ECONNABORTED).
004B (see note)	A communication error occurred with the remote node (ECONNRESET).
004E (see note)	A parameter error occurred at the remote IP address (ENETUNREACH).
004F (see note)	Received ICMP data (EHOSTDOWN).
0051 (see note)	A parameter error occurred at the remote IP address (EHOSTUNREACH).
0053 (see note)	A communication error occurred with the remote node (ETIMEDOUT).
0081	The specified socket was closed during transmission.

Note These errors occur only in large multilayered networks.

7-3-17 TCP CLOSE REQUEST

Requests processing to close a TCP socket. Other processing being carried out is forcibly ended and a code is recorded in the results storage area.

Command Block

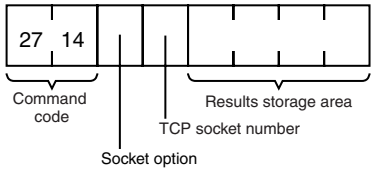

Response Block

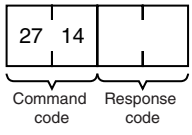

Results Storage Format

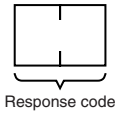

Parameters

Socket Option (Command)

The socket option specified as 1 byte. The setting is not valid for this command. Set to 0.

TCP Socket Number (Command)

The TCP socket number to be closed specified as 1 byte between 1 and 8.

Results Storage Area (Command)

The area in which the results of the command execution are stored. The first byte specifies the memory area and data type (variable type). The 2nd to 4th bytes specify the beginning address of the results storage area. Refer to page 160 for details about the variable types and addresses that can be specified.

Precautions

Any other processing, such as sending or receiving data, being carried out when this close command is executed will be forcibly ended and a code will be stored in the results storage area to indicate that this processing was forcibly ended.

Response Codes

Response code	Description
0000	Normal
0105	Local IP address setting error
0302	CPU Unit error; execution not possible.
1001	Command too large
1002	Command too small
1100	The TCP socket number is out of range.
1101	The variable type for the results storage area is out of range.
1103	Non-zero bit address specified for the results storage area.
2210	No connection could be established to the specified socket.
2211	High traffic at Unit; cannot execute service.
2240	Socket service mode is incorrect; cannot execute service. (With unit version 1.5 or later, the high-speed socket service option was enabled and a socket service was used with a CMND(490) instruction.)

Results Storage Area Response Codes

Response code	Description
0000	Normal

7-3-18 PING

Equivalent processing to the UNIX computer PING command (see below).

Command Block

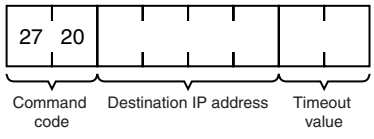

Response Block

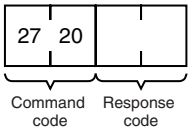

Parameters

Destination IP Address (Command)

The IP address (in hexadecimal) of the destination node for the PING command echo request packet.

Timeout Value (Command)

The wait time for the echo reply packet. The value is set in seconds. The timeout time is set at 20 seconds if the value is specified as 0. If the echo reply packet is not received within the set time limit, the code for a timeout error will be set as the results storage response code.

Remarks

PING Command

The PING command runs the echoback test using the ICMP protocol. When the PING command is executed, an echo request packet is sent to the remote node ICMP. Correct communications are confirmed when the returned response packet is received normally. The echo reply packet is automatically returned by the remote node ICMP.

Response Codes

Response code	Description
0000	Normal (echo reply received from the remote node)
0205	Timeout error
1001	Command too large
1002	Command too small
1100	Zero destination address
220F	PING command currently being executed
2211	High traffic at Unit; cannot execute service.

7-3-19 FINS/TCP CONNECTION REMOTE NODE CHANGE REQUEST

Requests a remote node change for the FINS/TCP connection.

The default destination IP address in a connection in which the Ethernet Unit is used as a client is the destination IP address set under the FINS/TCP Tab in the Unit Setup. By sending this command to the Ethernet Unit, the destination IP address for the specified connection can be changed to another IP address.

Remote node changes can be made only for connection numbers specified as FINS/TCP clients in the Unit Setup.

Command Block

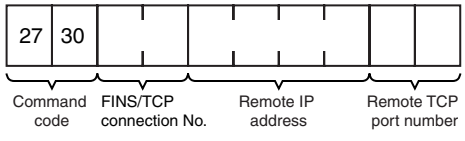

Response Block

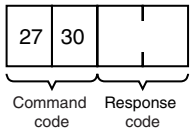

Parameters

FINS/TCP Connection No. (Command) Specifies, in two bytes, the FINS/TCP connection number (1 to 16) for which the change is to be made.

Remote IP Address (Command) Specifies the remote node's IP address (must be non-zero) in hexadecimal.

Remote Port Number (Command) Specifies the remote TCP port number (must be non-zero) with this command.

Response Codes

Response code	Description
0000	Normal
0105	Node address setting error Local IP address setting error
0302	CPU Unit error; execution not possible.
1001	Command too large
1002	Command too small
1100	Connection number not set from 1 to 16 Remote IP address set to 0 Remote TCP port number set to 0
2230	Connection already established with specified remote node
2231	Specified connection number not set as FINS/TCP client in Unit Setup
2232	Remote node change processing for specified connection number aborted because change request received during processing

7-3-20 FINS/TCP CONNECTION STATUS READ

Reads the FINS/TCP connection status.

Command Block

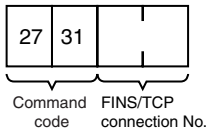

Response Block

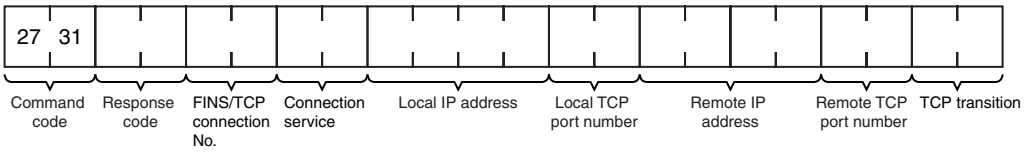

Parameters

FIFINS/TCP Connection No. (Command, Response)

Command: Specifies, in two bytes, the FINS/TCP connection number (1 to 16) for which the status is to be read.

Response: Specifies the FINS/TCP connection number (1 to 16) for which the status was read.

Connection Service (Response)

Specifies the service that is being used for the FINS/TCP connection as a number.

0003: FINS/TCP server

0004: FINS/TCP client

Local IP Address (Response)

Specifies the IP address for the local node in hexadecimal.

Local TCP Port Number (Response)

Specifies the TCP port number for the local node.

Remote IP Address (Response)

Specifies the IP address for the remote node in hexadecimal.

Remote TCP Port Number (Response)

Specifies the TCP port number for the remote node.

TCP Transitions (Response)

Specifies the TCP connection status using the following numbers.

For details on TCP status changes, refer to *Appendix C TCP Status Transitions*.

Number	Status	Meaning
00000000	CLOSED	Connection closed.
00000001	LISTEN	Waiting for connection.
00000002	SYN SENT	SYN sent in active status.
00000003	SYN RECEIVED	SYN received and sent.
00000004	ESTABLISHED	Already established.
00000005	CLOSE WAIT	FIN received and waiting for completion.
00000006	FIN WAIT 1	Completed and FIN sent.
00000007	CLOSING	Completed and exchanged FIN. Awaiting ACK.
00000008	LAST ACK	FIN sent and completed. Awaiting ACK.
00000009	FIN WAIT 2	Completed and ACK received. Awaiting FIN.
0000000A	TIME WAIT	After closing, pauses twice the maximum segment life (2MSL).

Response Codes

Response code	Description
0000	Normal
0105	Node address setting error Local IP address setting error
0302	CPU Unit error; execution not possible.
1001	Command too large
1002	Command too small
1100	Connection number not set from 1 to 16

7-3-21 IP ADDRESS TABLE WRITE

Writes the IP address table.

Command Block

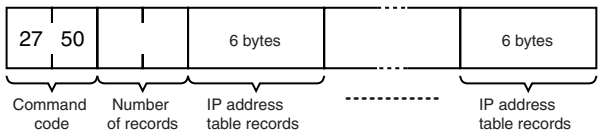

Response Block

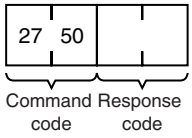

Parameters

Number of Records (Command)

The number of records to write is specified in hexadecimal between 0000 and 0020 (0 to 32 decimal) in the command. If this value is set to 0, the IP address table will be cleared so that no records are registered.

IP Address Table Records (Command)

Specify the IP address table records. The number of records specified must be provided. The total number of bytes in the IP address table records is calculated as the number of records × 6 bytes/record. The configuration of the 6 bytes of data in each record is as shown in the following diagram.

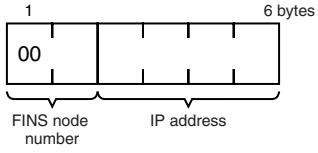

FINS Node Address

Node address for communications via the FINS command (hexadecimal).

IP Address

IP address used by TCP/IP protocol (hexadecimal).

Precautions

The new I/O address table records will not be effective until the PC is restarted or the Ethernet Unit is reset.

An error response will be returned if the IP address conversion method in the system mode settings is set for automatic generation.

Response Codes

Response code	Description
0000	Normal (echo reply received from the remote node)
1001	Command too large
1002	Command too small
1003	The number of records specified does not match the sent data length.
110C	The number of records is not between 0 and 32. The FINS node address is not between 1 and 126 The IP address is 0.
2307	IP address conversion method is set for automatic generation.

7-3-22 IP ADDRESS WRITE

Write the local IP address and the subnet mask in the CPU Bus Unit System Setup.

Command Block

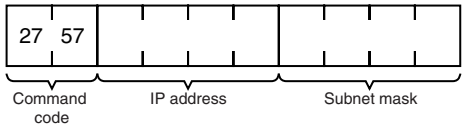

Response Block

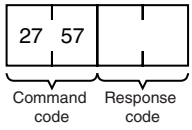

Parameters

IP Address (Command)

Specify the local IP address of the Ethernet Unit using 4 pairs of hexadecimal numbers in the range 00.00.00.00 to FF.FF.FF.FF (0.0.0.0. to 255.255.255.255 decimal). If 0.0.0.0 is specified, the local IP address set in the allocated words in the DM Area is enabled.

Example: 150.31.2.83

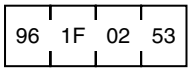

Subnet Mask (Command)

Specify the local IP address of the Ethernet Unit using 4 pairs of hexadecimal numbers in the range 00.00.00.00 to FF.FF.FF.FF (0.0.0.0. to 255.255.255.255 decimal).

Example: 255.255.255.255

Response Codes

Response code	Description
0000	Normal
1001	Command too large
1002	Command too small

Precautions

The local IP address and subnet mask set using this mask are written to the CPU Bus Unit System Setup for the Ethernet Unit.

The new local IP address and subnet mask settings will not be effective until the PC is restarted or the Ethernet Unit is reset.

7-3-23 IP ADDRESS TABLE READ

Reads the IP address table.

Command Block

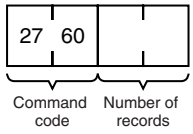

Response Block

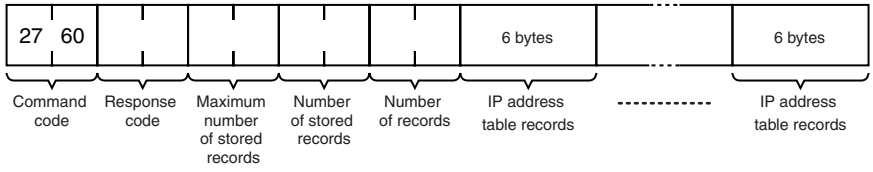

Parameters

Number of Records (Command, Response)

The number of records to read is specified between 0000 and 0020 (0 to 32 decimal) in the command. If this value is set to 0, the number of stored records is returned but the IP address table records are not returned. The response returns the actual number of records read.

Maximum Number of Stored Records (Response)

The maximum number of records that can be stored in the IP address table is returned. The maximum number of stored records is fixed at 0020 (32 records).

Number of Stored Records (Response)

The number of IP address table records stored at the time the command is executed is returned as a hexadecimal number.

IP Address Table Records (Response)

The number of IP address table records specified in the number of records parameter is returned. The total number of bytes in the IP address table records is calculated as the number of records × 6 bytes/record. The configuration of the 6 bytes of data in each record is as shown in the following diagram.

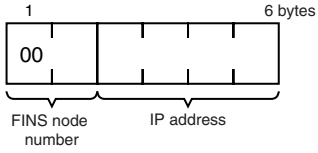

FINS Node Address

Node address for communications via the FINS command (in hexadecimal).

IP Address

IP number used by TCP/IP protocol (in hexadecimal).

Precautions

If the IP address table contains fewer records than the number specified in the *number of records* parameter, all the records contained in the IP address table when the command is executed will be returned and the command execution will end normally.

An error response will be returned if the IP address conversion method in the system mode settings is set to the automatic generation method.

Response Codes

Response code	Description
0000	Normal
1001	Command too large
1002	Command too small
2307	IP address conversion method is set to the automatic generation method.

7-3-24 IP ROUTER TABLE READ

Reads the IP router table.

Command Block

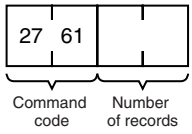

Response Block

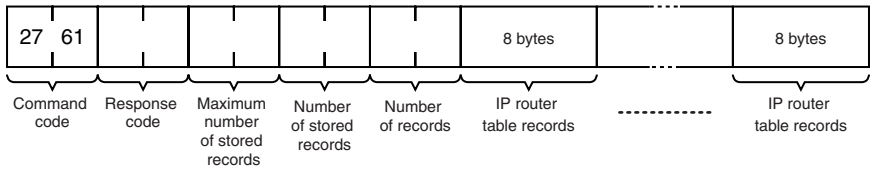

Parameters

Number of Records (Command, Response)

The number of records to read is specified between 0000 and 0008 (0 to 8 decimal) in the command. If this value is set to 0, the number of stored records will be returned but the IP router table records will not be returned. The response returns the actual number of records read.

Maximum Number of Stored Records (Response)

The maximum number of records that can be stored in the IP router table is returned. The maximum number of stored records is fixed at 0008 (8 records).

Number of Stored Records (Response)

The number of IP router table records stored at the time the command is executed is returned in hexadecimal.

IP Router table Records (Response)

The number of IP router table records specified in the *number of records* parameter is returned. The total number of bytes in the IP router table records is calculated as the number of records × 8 bytes/record. The configuration of the 8 bytes of data in each record is shown below.

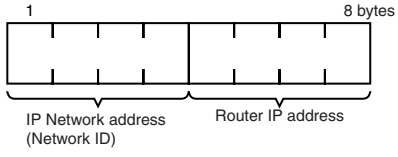

IP Network Address

The network ID from the IP address in hexadecimal. The network ID part corresponding to the address class (determined by the leftmost 3 bits) set here, is enabled. (Refer to page 50.)

Router IP Address

The IP address (in hexadecimal) of a router connected to a network specified with IP addresses.

Precautions

If the IP router table contains fewer records than the number specified in the *number of records* parameter, all the records contained in the IP router table when the command is executed will be returned and the command execution will end normally.

Response Codes

Response code	Description
0000	Normal
1001	Command too large
1002	Command too small

7-3-25 PROTOCOL STATUS READ

Reads the Ethernet Unit protocol status.

Command Block

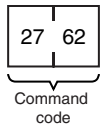

Response Block

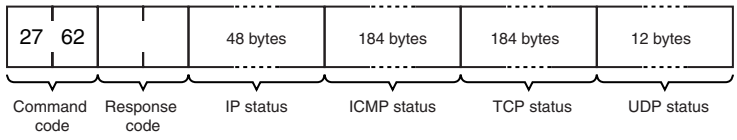

Parameters

IP Status (Response)

Twelve types of IP status information occupying 4 bytes each are returned in the following sequence. Each value is returned as an 8-digit hexadecimal value.

1,2,3...

1. Total number of IP packets received.
2. The number of IP packets discarded due to an error with the checksum in the packet header.
3. The number of IP packets discarded because the received packet was larger than the overall packet length value in the packet header.
4. The number of IP packets discarded because the minimum size of the IP header data could not be stored in the first short buffer (See note.) when an attempt was made to store the packet. Refer to *7-3-26 MEMORY STATUS READ* and *Appendix B Buffer Configuration*.
5. The number of packets discarded for one of the following reasons:
   - The IP header length value in the IP header was smaller than the smallest size of the IP header.
   - The size of the first short buffer (See note.) was smaller than the IP header length value in the IP header when storing the packet.

6. The number of IP packets discarded because the IP header length was larger than the overall packet length value in the packet header.
7. The number of fragmented packets received.
8. The number of received fragmented IP packets discarded because a queue for reassembly could not be secured.
9. The number of fragmented IP packets discarded because they could not be reassembled within 12 seconds after being received.
10. Always 0.
11. The number of packets addressed to other networks that have been discarded.
12. Always 0.

Note Refer to *7-3-26 MEMORY STATUS READ* for details on the short buffer.

ICMP Status (Response)

Ten types (46 items) of ICMP status information occupying 4 bytes each are returned in the following sequence. Each value is returned as an 8-digit hexadecimal value.

1,2,3...

1. The number of times the ICMP error routine was called. The ICMP error routine uses ICMP packets to inform the source about errors. The routine is called when an illegal packet is received (error in IP option processing or error in relay processing) or if the object port does not exist when using UDP.
2. Always 0.
3. Always 0.
4. Total number of outputs of each packet type during ICMP output. The 19 statistical values are returned in the order shown below. Contents are defined for 13 types only; all other types contain 0. Only #0, #3, #14, #16, and #18 are counted by the Ethernet Unit.

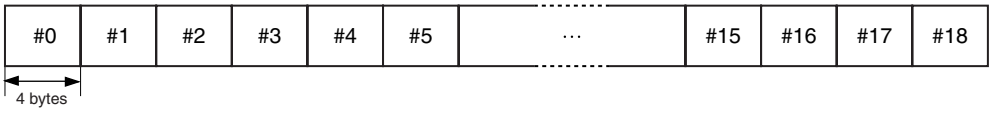

Type number	Description
#0	Echo reply
#1, #2	Undefined, always 0
#3	Destination unreachable
#4	Source quench
#5	Routing redirect
#6, #7	Undefined, always 0
#8	Echo
#9, #10	Undefined, always 0
#11	Time exceeded
#12	Parameter problem
#13	Time stamp
#14	Time stamp reply
#15	Information request
#16	Information request reply
#17	Address mask request
#18	Address mask reply

5. The number of received ICMP packets discarded because the type-indication code was out of range.
6. The number of received ICMP packets discarded because the overall packet length value in the packet header was smaller than the minimum ICMP packet length.
7. The number of received ICMP packets discarded because of an incorrect checksum value in the packet header.
8. The number of received ICMP packets discarded because the ICMP header length value in the packet header did not match the lengths of individual header types.
9. The number of responses returned to received ICMP packets requiring a response.
10. Total number of inputs of each packet type during ICMP input. The 19 statistical values are returned in the order shown below. Contents are defined for 13 types only; all other types contain 0.

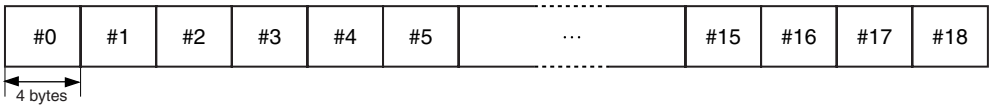

Type number	Description
#0	Echo reply
#1, #2	Undefined, always 0
#3	Destination unreachable
#4	Source quench
#5	Routing redirect
#6, #7	Undefined, always 0
#8	Echo
#9, #10	Undefined, always 0
#11	Time exceeded
#12	Parameter problem
#13	Time stamp
#14	Time stamp reply
#15	Information request
#16	Information request reply
#17	Address mask request
#18	Address mask reply

TCP Status (Response)

Three types (46 items) of TCP status information occupying 4 bytes each are returned in the following sequence. Each value is returned as an 8-digit hexadecimal value.

1) Connection Information (60 Bytes)

Fifteen items are returned in the following sequence:

1,2,3...

1. The number of times active connections were correctly established.
2. The number of times a SYN packet was received while waiting to establish a passive connection.
3. The number of times active or passive connections were correctly established.
4. The number of times an established connection was cut off.
5. The number of times the connection wait status was cut off.

6. The number of times protocol control blocks or other actively allocated structures were released.
7. The number of segments for the round-trip time (time from segment transmission to ACK).
8. The number of times the round-trip time was changed.
9. The number of times a delayed acknowledgement (ACK) was sent. If the order of the received segments is reversed, ACK is sent with a packet of data separate from ACK (response to input data, etc.) or is immediately sent with the ACK for other data.
10. The number of times the connection was cut off because no ACK was returned after several resend attempts.
11. The number of times no ACK was returned within the resend timer set time. (The resend timer sets the maximum time limit between the data being output and ACK being returned.)
12. The number of times no window advertisement is received within the time set on the duration timer. (The duration timer sets the maximum time limit for a window advertisement to be received if the transmission window is smaller than necessary and the resend timer is not set. If no window advertisement is received within the time limit, the number of segments permitted by the transmission window are sent. If the transmission window is set to 0, a window probe (1 octet of data) is sent before the timer restarts.)
13. The number of times no segment was sent or received within the time set on the hold timer.
14. The number of times the hold packet is resent. (Always 0.)
15. The number of times the hold packet is sent without response before the connection is cut off.

2) Send Information (40 Bytes)

Ten information items are returned in the following sequence:

1,2,3...

1. The total number of packets sent.
2. The number of data packets sent.
3. The number of data bytes sent.
4. The number of data packets resent.
5. The number of data bytes resent.
6. The number of ACK packets sent.
7. The number of window probes (1 octet of data) sent.
8. The number of emergency data packets sent. (Always 0.)
9. The number of window advertisement packets sent.
10. The number of control packets (SYN, FIN, RST) sent.

3) Receive Information

Twenty-one information items are returned in the following sequence:

1,2,3...

1. The total number of packets received.
2. The number of packets received continuously.
3. The number of bytes received continuously.
4. The number of received packets discarded due to an incorrect checksum.
5. The number of packets discarded because the TCP header was smaller than the minimum size for a TCP header or was larger than the IP packet.

6. The number of packets discarded because the TCP header and IP header could not be stored in the first short buffer.
7. The number of resent packets received.
8. The number of bytes in the resend packets.
9. The number of duplicated resend packets received.
10. The number of bytes in the duplicated resend packets received.
11. The number of out-of-range data packets received. (Always 0.)
12. The number of bytes in the out-of-range data packets received. (Always 0.)
13. The number of packets where the data was larger than the window.
14. The number of bytes in the packets where the data was larger than the window.
15. The number of packets received after closing.
16. The number of window probe packets received.
17. The number of resent ACK packets received.
18. The number of ACK packets received with no data set.
19. The number of ACK packets received.
20. The number of ACK packets received for received transmission acknowledgements (ACK).
21. The number of window advertisement packets received.

UDP Status (Response)

Three items of UDP information occupying 4 bytes each are returned in the following sequence. Each value is returned as an 8-digit hexadecimal value.

1,2,3...

1. The number of packets discarded because the size of the first short buffer was smaller than the minimum size (28) of the IP header and UDP header when the packet was stored.
2. The number of packets discarded due to an incorrect checksum in the UDP header.
3. The number of packets discarded because the IP overall length in the IP header was shorter than the UDP overall length in the UDP header.

Precautions

All the above values are set to 0 if network operation stops due to incorrect settings in the system setup.

Counting will be stopped when a count reaches the maximum value. The maximum values are as follows:

IP, ICMP, or UDP status: 7FFFFFFF (2,147,483,647 decimal)
TC status: FFFFFFFF (4,294,967,295 decimal)

Response Codes

Response code	Description
0000	Normal
1001	Command too large

7-3-26 MEMORY STATUS READ

Reads the status of the Ethernet Unit's network memory. The network memory contains 248K bytes that are used as required as for communications buffers for communications servicing. The network memory consists of 1,472 short buffers (128 bytes each) and 64 long buffers (1,024 bytes each). Refer to *Appendix B Buffer Configuration*.

Command Block

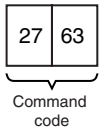

Response Block

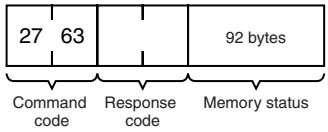

Parameters

Memory Status (Response)

A total of 23 data items in six areas are returned in the following order. Each item consists of 4 bytes.

1,2,3...

1. Short Buffer Application: Two items are returned (8 bytes).
   a. The number of short buffers currently being used.
   b. The number of short buffers in the system (fixed at 1,472 decimal).
2. Short Buffer Application by Type: Thirteen items are returned (52 bytes).
   a. The number of short buffers used for storing communications data
   b. The number of short buffers used for protocol headers (TCP, UDP, IP, ICMP, ARP)
   c. The number of short buffers used in socket structures
   d. The number of short buffers used as protocol control blocks
   e. The number of short buffers used for routing tables
   f. Not used (always 0)
   g. Not used (always 0)
   h. The number of short buffers used for IP fragment re-assembly queue headers
   i. The number of short buffers used for storing socket addresses
   j. Not used (always 0)
   k. The number of short buffers used for storing socket options
   l. The number of short buffers used for storing access rights
   m. The number of short buffers used for storing interface addresses
3. Long Buffer Application: Two items are returned (8 bytes).
   a. The number of long buffers currently being used.
   b. The number of long buffers in the system (fixed at 64 decimal).
4. Not Used: Always 0. (4 bytes)
5. Network Memory Application: Two items are returned.
   a. The number of bytes used (in K bytes)
   b. The percentage used
6. Memory Exhaustion Log (12 bytes)

   Counts for the following values indicate a high load on the Ethernet Unit. These high loads may be caused by problems in communications, particularly FINS communications and UDP sockets. If these values are consistently high, check your applications.

a. The number of times an attempt was made to secure a short buffer without WAIT when there were no short buffers available.

b. The number of times an attempt was made to secure a short buffer with WAIT when there were no short buffers available.

c. The number of times an attempt was made to release and secure a short buffer already being used by another socket when there were no short buffers available.

Precautions

All the above values are set to 0 if Ethernet communications functions are stopped due to improper settings in the system setup.

These values are cleared when the Ethernet Unit is started or reset. Values will be counted only until the maximum values are reached.

Response Codes

Response code	Description
0000	Normal
1001	Command too large

7-3-27 SOCKET STATUS READ

Reads the Ethernet Unit network socket status.

Command Block

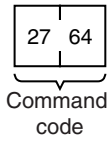

Response Block

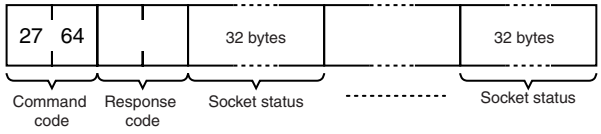

Parameters

Socket Status (Response)

Returns eight types of information in records of 32 bytes each. A maximum of 62 records can be returned. The format of each record is shown below.

Protocol (4 bytes)

The protocol used for the socket is returned as a number.
00 00 00 06: TCP; 00 00 00 11: UDP

Receive Queue (4 bytes)

The number of bytes in the reception queue.

Send Queue (4 bytes)

The number of bytes in the send queue.

Local IP Address (4 bytes)

The local IP address allocated to the socket.

Local Port Number (4 bytes)

The local port number allocated to the socket.

Remote IP Address (4 bytes)

The remote IP address allocated to the socket.

Remote Port Number (4 bytes)

The remote port number allocated to the socket.

TCP Transitions (4 bytes)

The TCP connection status is returned as one of the numbers shown in the following table. Refer to *Appendix C TCP Status Transitions* for a diagram of transitions.

Number	Stage	Status
00 00 00 00	CLOSED	Closed.
00 00 00 01	LISTEN	Waiting for connection.
00 00 00 02	SYN SENT	SYN sent in active status.
00 00 00 03	SYN RECEIVED	SYN received and sent.
00 00 00 04	ESTABLISHED	Already established.
00 00 00 05	CLOSE WAIT	Received FIN, waiting to close.
00 00 00 06	FIN WAIT 1	Completed and FIN sent.
00 00 00 07	CLOSING	Completed and exchanged FIN. Awaiting ACK.
00 00 00 08	LAST ACK	FIN sent and completed. Awaiting ACK.
00 00 00 09	FIN WAIT 2	Close completed and ACK received. Awaiting FIN.
00 00 00 0A	TIME WAIT	After closing, pauses twice the maximum segment life (2MSL).

Precautions

All the above values are set to 0 if Ethernet communications functions are stopped due to improper settings in the system setup.

Response Codes

Response code	Description
0000	Normal
1001	Command too large

7-3-28 ADDRESS INFORMATION READ

Reads FINS node addresses and IP addresses

Command Block

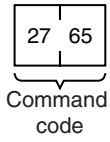

Response Block

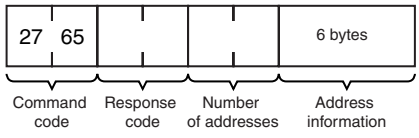

Parameters

Number of Addresses (Response)

The number of pairs of FINS node addresses and IP addresses being returned. The Ethernet Unit is always 0001 (1 decimal).

Address Information

Pairs of FINS node addresses and IP addresses. Each pair requires 6 bytes and has the following configuration.

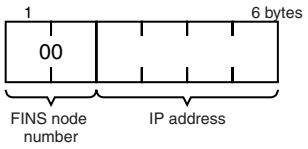

FINS Node Address

Node address set on the Ethernet Unit (hexadecimal).

IP Address

IP address set on the Ethernet Unit (hexadecimal).

Response Codes

Response code	Description
0000	Normal
1001	Command too large

7-3-29 IP ADDRESS READ

Reads the local IP address and subnet mask in the CPU Bus Unit System Setup and the FINS node address. The values read with this command, however, are not necessarily the settings actually used for operation. The settings that are actually used for operation can be confirmed using CONTROLLER DATA READ (page 162) and ADDRESS INFORMATION READ (page 199).

This command is supported for CJ-series Ethernet Units only.

Command Block

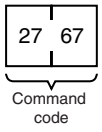

Response Block

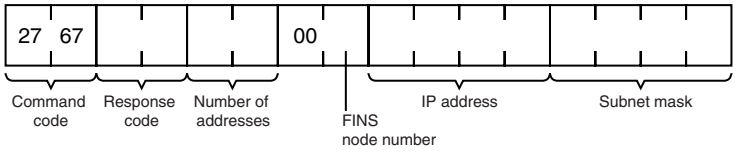

Parameters

Number of Addresses (Response)

The number of sets of FINS node addresses, IP addresses, and subnet masks being returned. The Ethernet Unit is always 0001 (1 decimal).

FINS Node Address (Response)

Node address set on the Ethernet Unit (hexadecimal).

IP Address (Response)

The local IP address set in the CPU Bus Unit System Setup for the Ethernet Unit is returned in order starting from the leftmost bytes in hexadecimal. If the local IP address set in the allocated words in the DM Area is enabled, 0.0.0.0 is returned.

Subnet Mask (Response)

The subnet mask set in the CPU Bus Unit System Setup for the Ethernet Unit is returned in order starting from the leftmost bytes in hexadecimal.

Response Codes

Response code	Description
0000	Normal
1001	Command too large

SECTION 8
Troubleshooting

This section describes information and procedures that can be used to troubleshoot problems that sometimes occur with Ethernet Unit and Ethernet communications.

The Ethernet Unit makes up part of a network. Repair a defective Ethernet Unit as soon as possible as it can have a negative effect on the entire network. We recommend that customers keep one or more spare Ethernet Units to allow immediate recovery of the network.

8-1 Troubleshooting with Indicators 204
8-2 Error Status 205
8-3 Error Log 206
8-3-1 Error Log Error Codes 207
8-4 Troubleshooting Procedures 213
8-4-1 Startup Problems 213
8-4-2 FINS Communications Problems (SEND(090)/RECV(098)/CMND(490)) 214
8-4-3 UDP Socket Problems 215
8-4-4 TCP Socket Problems 218
8-4-5 FTP Service Problems 221
8-4-6 Network Connection Problems 223
8-4-7 Troubleshooting with Response Codes 227
8-5 Results Storage Area Response Codes 231

8-1 Troubleshooting with Indicators

The indicators on the Ethernet Unit can be used to troubleshoot some error. The probable cause and correction for errors that can be determined from the LINK, HOST, RUN, ERC, and ERH indicators are listed in the following table.

RUN	ERC	ERH	LNK	HOST	Probably cause	Correction
Not lit	Not lit	Not lit	---	---	Power is not being supplied to the CPU Unit or the power supply voltage is too low.	Supply power. Make sure that the correct voltage is being supplied.
					The Ethernet Unit is faulty.	Replace the Ethernet Unit.
					The CPU Unit or Backplane is faulty.	Replace the CPU Unit or the Backplane.
					The mounting screws on the Ethernet Unit are loose (CS Series) or the sliders are not properly locked into place (CJ Series).	Tighten the mounting screws to the specified torque (CS Series) or lock the sliders into place (CJ Series).
Not lit	Lit	Not lit	---	---	The node address is set outside the correct range on the rotary switches.	Set the node address to between 01 and FE Hex.
					The Ethernet Unit is faulty.	Restart the PLC. If the problem persists, replace the Ethernet Unit.
Not lit	Not lit	Lit	---	---	The unit number on the Ethernet Unit is not set correctly on the rotary switch.	Correct the unit number setting.
					The I/O tables are not registered in the CPU Unit.	Register the I/O tables.
					The same unit number is being used on another Unit as well.	Correct the unit number.
					The CPU Unit is faulty.	Restart the CPU Unit. If the problem persists, replace the CPU Unit.
Lit	---	---	Not lit	---	There is no communications link with the hub.	If power is not turned ON to the hub, turn it ON. If there is crossed cable between the Ethernet Unit and the hub, use straight cable.
Lit	---	Lit	---	---	There is a mistake in the Unit Setup or routing tables.	Read the error history and correct the data that is causing the error. If the problem persists, replace the CPU Unit.
					Memory in the CPU Unit is faulty.	Restart the CPU Unit. If the problem persists, replace the CPU Unit.
					The CPU Unit is faulty.	Restart the CPU Unit. If the problem persists, replace the CPU Unit.
				Lit	There is a mistake in the settings for a server (DNS, SMTP, POP3, or SNTP) in the Unit Setup.	Read the error status and history and correct the data that is causing the error. If the problem persists, replace the CPU Unit.
		Not lit	---	Lit	An error occurred in communications with the server.	Inspect the communications path (Ethernet Unit, cable connections, hub, router, server), and correct the situation that is causing the error.
Lit	Lit	---	---	---	An error occurred in EEPROM.	Restart the PLC. If the problem persists, replace the Ethernet Unit.

RUN	ERC	ERH	LNK	HOST	Probably cause	Correction
Lit	---	Flash-ing	---	---	The IP address is set incorrectly.	Correct the IP address. Do not set any of the following IP addresses. • Host IDs that are all 0 or all 1. • Network IDs that are all 0 or all 1. • Subnetwork IDs that are all 1. • Addresses beginning with 127 (7F Hex).
					The node address set on the rotary switch on the front of the Unit does not agree with the host ID in the IP address. This probably can occur when the address conversion method is set for automatic address generation.	Make sure that the node address and the last byte of the IP address are the same and set other host IDs to 0. Change the address conversion method.
Flash-ing	---	---	---	---	The Unit operation mode change function is in effect.	Set the node address correctly.

8-2 Error Status

The Ethernet Unit will output error status to the following word in the CIO Area of the CPU Unit. This information can be used in troubleshooting errors.

Word = CIO 1500 + (25 x unit number) +18

Error Status (Ethernet Unit to CPU Unit)

The status of errors that occur at the Ethernet Unit is reflected as shown in the following diagram.

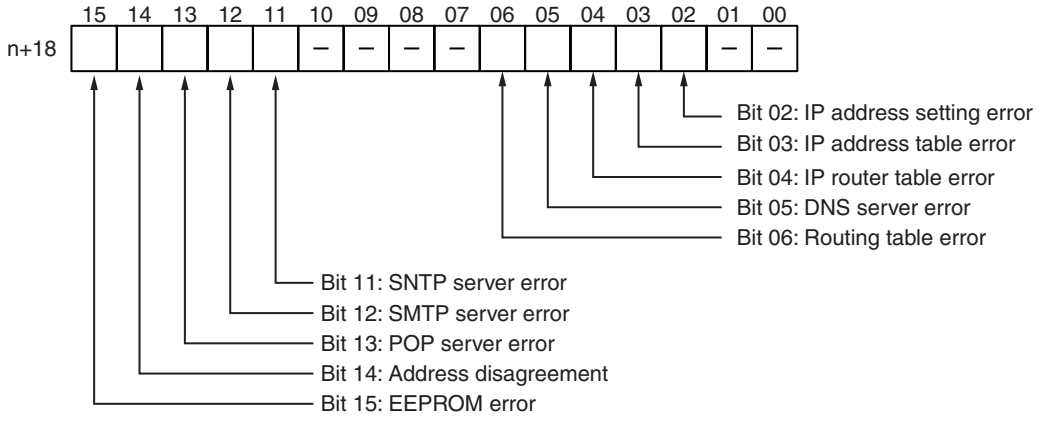

Bit	Error	Status	Manipulated by	Unit operation
0 to 1	(Not used.)	---	---	---
2	IP address setting error	ON	Unit	ON if any of the following conditions apply to the IP address. • All bits in the host ID are 0 or 1. • All bits in the network ID are 0 or 1. • All bits in the subnet ID are 1. • The IP address begins with 127 (0x7F).
		OFF	Unit	OFF when the IP address is normal.
3	IP address table error	ON	Unit	On if the IP address table information is incorrect.
		OFF	Unit	OFF when the IP address table is normal.
4	IP router table error	ON	Unit	ON if the IP router table information is incorrect.
		OFF	Unit	OFF when the IP address table is normal.

Bit	Error	Status	Manipulated by	Unit operation
5	DNS server error	ON	Unit	ON when the following errors occur during DNS server operation: • An illegal server IP address is set. • A timeout occurs during communications with the server.
		OFF	Unit	OFF when DNS server operation is normal.
6	Routing table error	ON	Unit	ON if the routing table information is incorrect.
		OFF	Unit	OFF when the routing table is normal.
7 to 10	(Not used.)	---	---	---
11	SNTP server error	ON	Unit	ON when the following errors occur during SNTP server operation: • An illegal server IP address or host name is set. • A timeout occurs during communications with the server.
		OFF	Unit	OFF when SNTP server operation is normal.
12	SMTP server error	ON	Unit	ON when the following errors occur during SMTP server operation: • An illegal server IP address or host name is set. • A timeout occurs during communications with the server. • The verification time from the server has expired (when POP before SMTP is set).
		OFF	Unit	OFF when SMTP server operation is normal.
13	POP server error	ON	Unit	ON when the following errors occur during POP server operation: • An illegal server IP address or host name is set. • A server verification error (user name or password) occurs. • A timeout occurs during communications with the server.
		OFF	Unit	OFF when use of the POP server is normal.
14	Address disagreement	ON	Unit	ON if the remote IP address is set to automatic generation but the local IP address host number and FINS node address do not agree.
		OFF	Unit	OFF under all other circumstances.
15	EEPROM error	ON	Unit	ON if an error has occurred in the EEPROM memory.
		OFF	Unit	OFF when the EEPROM memory is normal.

8-3 Error Log

The Ethernet Unit provides an error log that records errors that have occurred during Ethernet Unit operation. The contents of the error log can be read or cleared from a Programming Device, such as the CX-Programmer, or it can be read or cleared using FINS commands from a workstation or computer. (See *7-3-7 ERROR LOG READ* and *7-3-8 ERROR LOG CLEAR*).

Logged Errors

The following errors are recorded in the error log.

- Errors in network operation
- Errors in data transfers
- Error in the CPU Unit

Error Log Table

Each error is recorded as one record in an error log table. Up to 64 records can be saved. If more than 64 errors occur, the oldest errors will be deleted from the error log and the most recent error will be recorded.

The following information is recorded in the error log table.

- Main error code (See table later in this section.)
- Detailed error code (See table later in this section.)
- Time stamp (from the clock in the CPU Unit)

Error Log Location

When an error is detected, the error codes and time stamp are recorded in the error log in RAM inside the Ethernet Unit. Serious errors are also recorded in EEPROM. The maximum number of errors that can be saved to EEPROM is 64 for the CS Series and 32 for the CJ Series. The errors recorded in EEPROM will be saved even if the Unit is restarted or power is turned OFF. When the Ethernet Unit is started, the contents of the error log in EEPROM is copied to RAM.

When a FINS command is used to read the error log, the log held in RAM is read. When a FINS command is used to clear the error log, the logs held in both RAM and EEPROM are cleared.

FINS Commands for Error Logs

The following FINS commands can be used to read or clear the error log. Refer to *SECTION 7 FINS Commands Addressed to Ethernet Units*.

Command code		Function
MRC	SRC	
21	02	ERROR LOG READ
	03	ERROR LOG CLEAR

8-3-1 Error Log Error Codes

The error codes are described in the following table. The detailed error code will provide detailed information on an error.

Error code	Meaning	Detailed error code		Correction	EE-PROM
		1st byte	2nd byte		
0001	Watchdog timer error in CPU Unit	00	00	Replace the CPU Unit.	Saved
0002	CPU Unit service monitor error	Monitor time (ms)		Check the operating environment.	Saved
0006	Other CPU error	Bit 11: Unit not in Registered I/O Tables Other bits are reserved for system use.		Create the I/O tables.	Saved
000F	CPU Unit initialization error	00	00	Replace the CPU Unit.	Saved
0010	Insufficient System Setup Area	00	00	Reduce the number of CPU Bus Units.	Saved
0011	Event timed out	MRC	SRC	Replace the CPU Unit.	Saved
0012	CPU Unit memory error	01: Read error 02: Write error	03: Routing table 04: Setup error 05: CPU Bus Unit Words (CIO/DM)	01: Recreate the data specified by the 2nd byte of the detailed error code. 02: Clear memory using procedure in the PLC operation manual.	Saved
0013	CPU Unit protected	00	00	Remove protection from CPU Unit memory.	Saved

Error code	Meaning	Detailed error code		Correction	EE-PROM
		1st byte	2nd byte		
0103	Resend count exceeded (send failed)	Commands Bit 15: OFF Bits 08 to 14: SNA Bits 00 to 07: SA1 Responses Bit 15: ON Bits 08 to 14: DNA Bits 00 to 07: DA1		Check transceiver at remote node.	---
0105	Node address setting error (send failed)			Set the IP address correctly.	---
0107	Remote node not in network (send failed)			Check the connection to the remote node.	---
0108	No Unit with specified unit address (send failed)			Check the unit address at the remote node.	---
010B	CPU Unit error (send failed)			Troubleshoot the error in the CPU Unit using the PLC operation manual.	---
010D	Destination address not in routing tables (send failed)			Set the destination address in the routing tables.	---
010E	No routing table entry (send failed)			Set the local node, remote node, and relay nodes in the routing tables.	---
010F	Routing table error (send failed)			Create the routing tables correctly.	---
0110	Too many relay points (send failed)			Reconstruct the network or correct the routing tables so that commands are sent to within a 3-level network range.	---
0111	Command too long (send failed)			Check the command format and set the correct command data.	---
0112	Header error (send failed)			Check the command format and set the correct command data.	---
0117	Internal buffers full; packet discarded			Change the network so that traffic is not concentrated.	---
0118	Illegal packet discarded			Check for nodes sending illegal packets.	---
0119	Local node busy (send failed)			Change the network so that traffic is not concentrated.	---
0120	Unexpected routing error			Check the routing tables.	---
0121	No setting in IP address table; packet discarded			Set the remote node in the IP address table.	---
0122	Service not supported in current mode; packet discarded			Select the IP address table or both methods for the address conversion method.	---
0123	Internal send buffer full; packet discarded			Change the network so that traffic is not concentrated.	---
0124	Maximum frame size exceeded; routing failed			Reduce the size of events.	---
021A	Logic error in setting table	00	01: Data link table 02: Network parameters 03: Routing tables 04: Unit Setup 05: CPU Bus Unit Words (CIO/DM)	Recreate the data specified by the 2nd byte of the detailed error code.	Saved

Error code	Meaning	Detailed error code		Correction	EE-PROM
		1st byte	2nd byte		
0300	Parameter error; packet discarded	Commands Bit 15: OFF Bits 08 to 14: SNA Bits 00 to 07: SA1 Responses Bit 15: ON Bits 08 to 14: DNA Bits 00 to 07: DA1		Check the command format and set the correct command data.	---
03C0	FINS/TCP setting error	01 to 10: Connection number	01: Automatically allocated FINS node address duplication 02: Destination IP address error 03: Destination port number error	Refer to *1-5-1 FINS Communications Service* in this manual and the *Operation Manual, Construction of Applications: SECTION 7* and set the FINS/TCP settings correctly.	---
03C1	Server setting error	00: DNS 01: SMTP 02: POP3 03: SNTP	01: IP address 02: Host name 03: Port number 04: Other parameters	Set the server settings correctly based on the information in the detailed error code.	---

Error code	Meaning	Detailed error code		Correction	EE-PROM
		1st byte	2nd byte		
03C2	FINS/TCP packet discarded	01 to 10: Connection number	02: Reopened because remote node closed 03: Reopened because of reception error 04: Reopened because of transmission error 05: Reopened because RST received from remote node 06: Reopened because of no keep-alive response	Have the FINS/TCP connection status checked when a SEND(090), RECV(098), or CMND(490) instruction is executed in the ladder program.	---
			07: Illegal FINS/TCP procedure	Refer to *Operation Manual, Construction of Applications: SECTION 7*, and correct the remote node (application on a personal computer).	---
			08: Insufficient memory during server processing 09: Insufficient memory during client processing 0A: Insufficient memory during node switching	There is too much load (traffic) on the Ethernet Unit. Correct the system so that traffic is not concentrated.	---
03C3	FINS/UDP packet discarded	00	01 to FE: Transmission source node address	The automatic generation (static) method was used as the IP address conversion method, so remote IP address information in internal memory could not be changed.	---

Error code	Meaning	Detailed error code		Correction	EE-PROM
		1st byte	2nd byte		
03C4	Server connection error	00: DNS 01: SMTP 02: POP3 03: SNTP	01: Specified host does not exist 02: No service at specified host 03: Timeout 04: Closed unilaterally by host 05: Cannot connect because account information does not match 06: Host name resolution error 07: Transmission error 08: Reception error 09: Other error	Take either of the following measures. • Correct the settings for each server. • Inspect the communications path (Ethernet Unit, cable connections, hub, router, server), and correct the situation that is causing the error.	---
03C5	Mail communications error	F101: Mail too large F102: Mail received from non-specified address F103: Mail subject error F104: Non-specified command received F106: Mail format (header) error F107: Mail format (body) error F201: Parameter error F301: Decoding error F302: File attachment error (filename error, data format error, I/O memory write size error) F303: No attached file F304: Non-specified file attachment received F305: File attachment too large Other: FINS error response code		Refer to the *Operation Manual, Construction of Applications: Creating FINS Applications*, and correct the remote node (i.e., the application on the personal computer).	---
03C6	Clock data write error	0001: Clock data could not be refreshed because of a CPU Unit error.		Clear the CPU Unit error.	---
		0002: Clock data could not be refreshed because the CPU Unit could not write clock data in that operation mode.		Refer to the *Operation Manual, Construction of Applications: Automatic Clock Adjustment Function*, and check the operating conditions.	---

Error code	Meaning	Detailed error code		Correction	EE-PROM
		1st byte	2nd byte		
0601	CPU Bus Unit error	Arbitrary		Restart the CPU Unit. If the problem persists, replace the Ethernet Unit.	Saved
0602	CPU Bus Unit memory error	01: Read error 02: Write error	06: Error log	Restart the CPU Unit. If the problem persists, replace the Ethernet Unit.	Saved (except for error log)

Note

(1) The time information in the CPU Unit is used in the CPU Bus Units.

(2) If the time information cannot be read from the CPU Unit, the time stamp in the error log will be all zeros. This can occur due to CPU Unit startup error, unit number errors, CPU error, and model number errors. If the time is read out from a Programming Device, the time will be shown as all zeros in the year 2000.

(3) The battery must be installed in the CS/CJ-series CPU Unit, the power turned ON, and then the time set before the clock in the CPU Unit can be used. The time will not be set correctly in the error log unless the clock time is set correctly.

(4) An error record is not created in EEPROM when a CPU Bus Unit memory error occurs.

8-4 Troubleshooting Procedures

The following procedures can be used to troubleshoot various problems in system operation.

8-4-1 Startup Problems

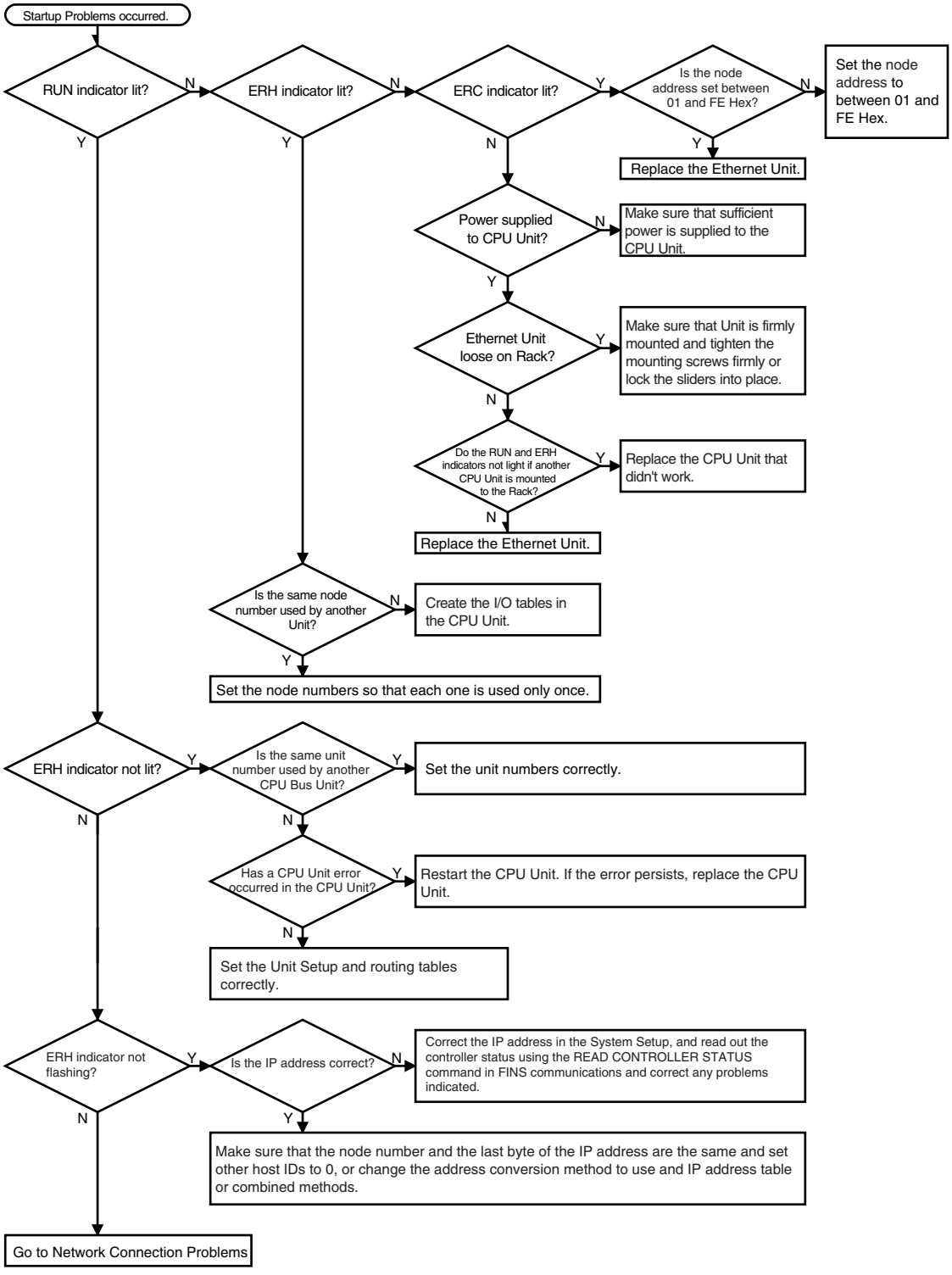

8-4-2 FINS Communications Problems (SEND(090)/RECV(098)/CMND(490))

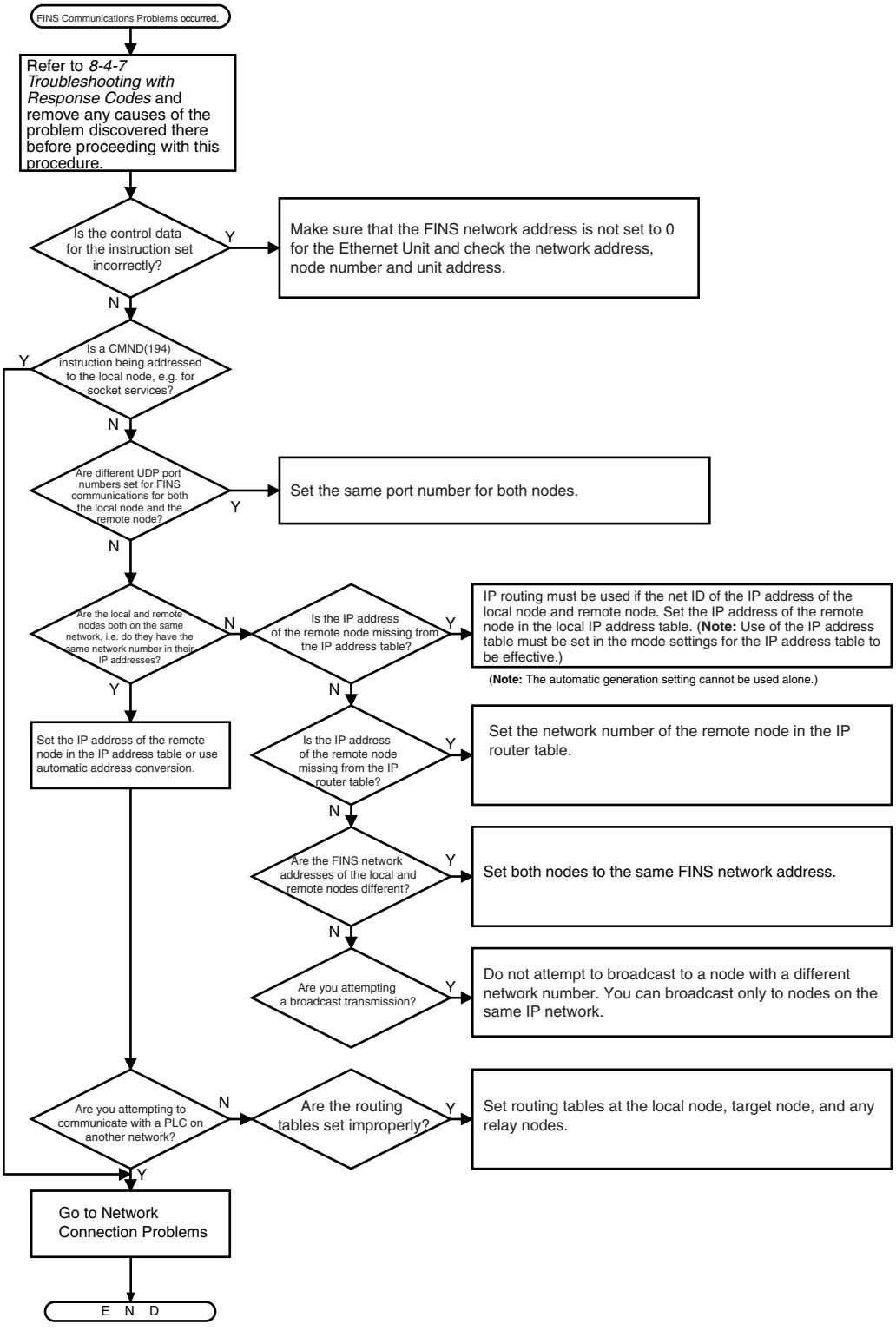

8-4-3 UDP Socket Problems

General Problems

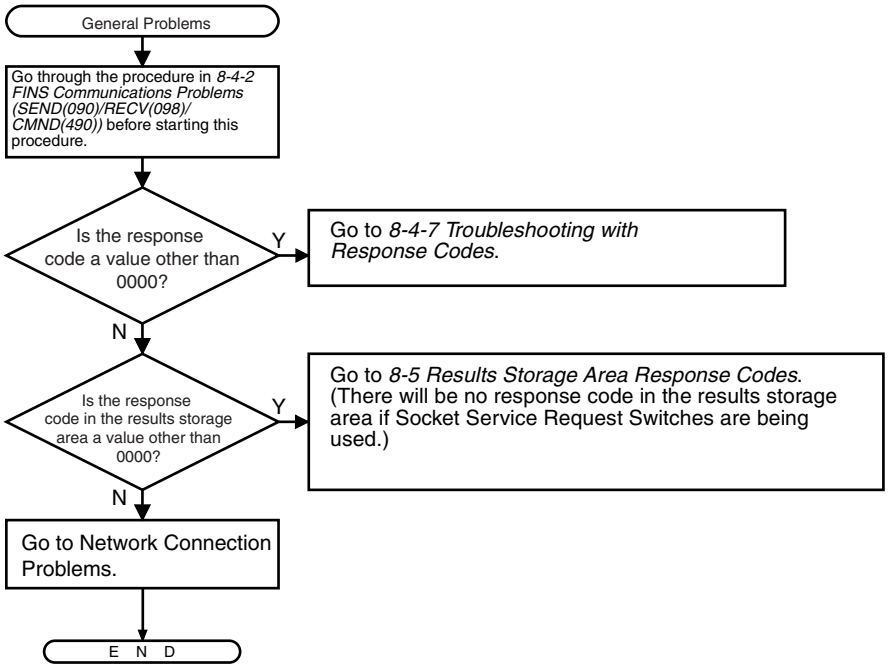

Opening and Closing Problems

Refer to *General Problems* above.

Reception Problems

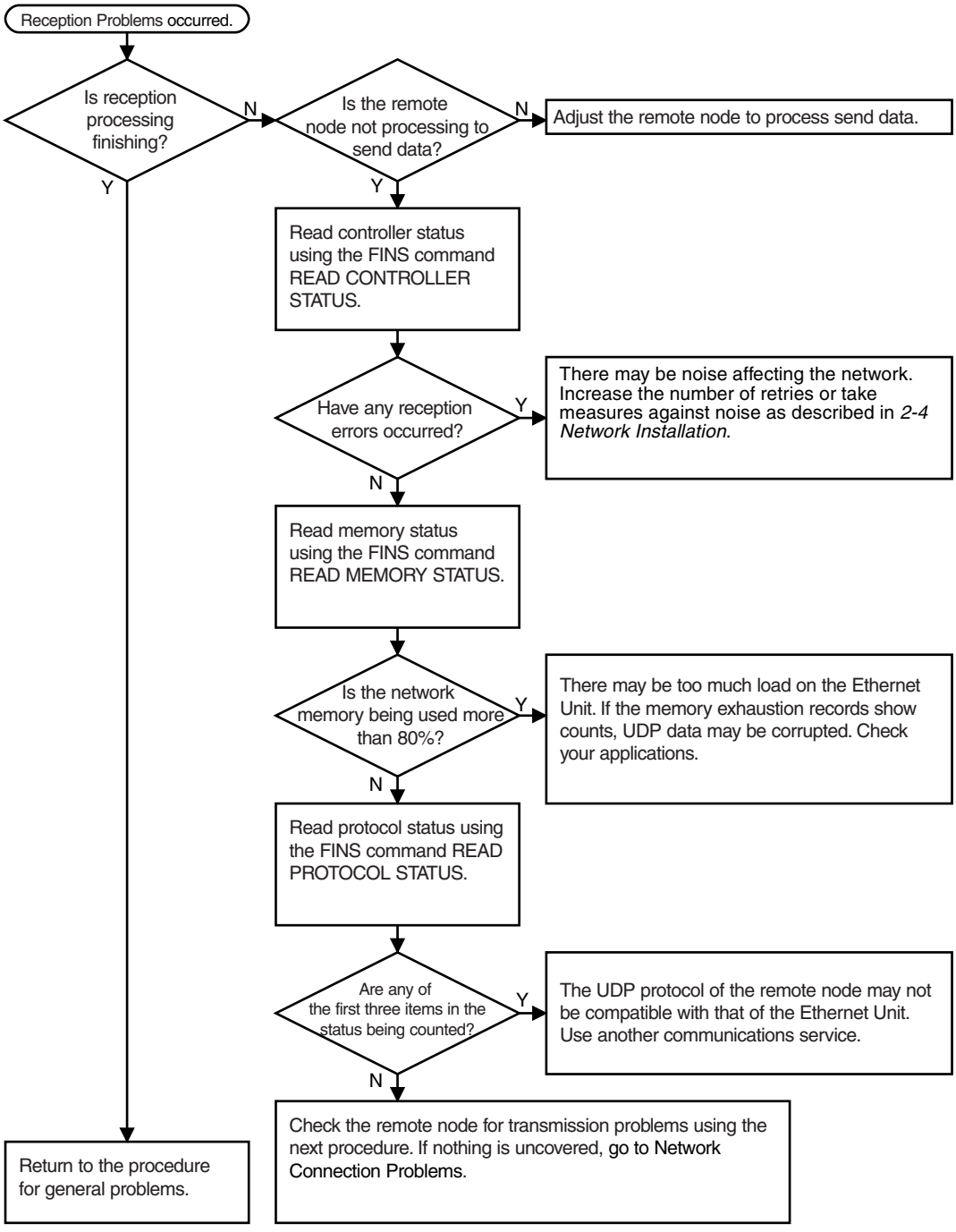

Transmission Problems

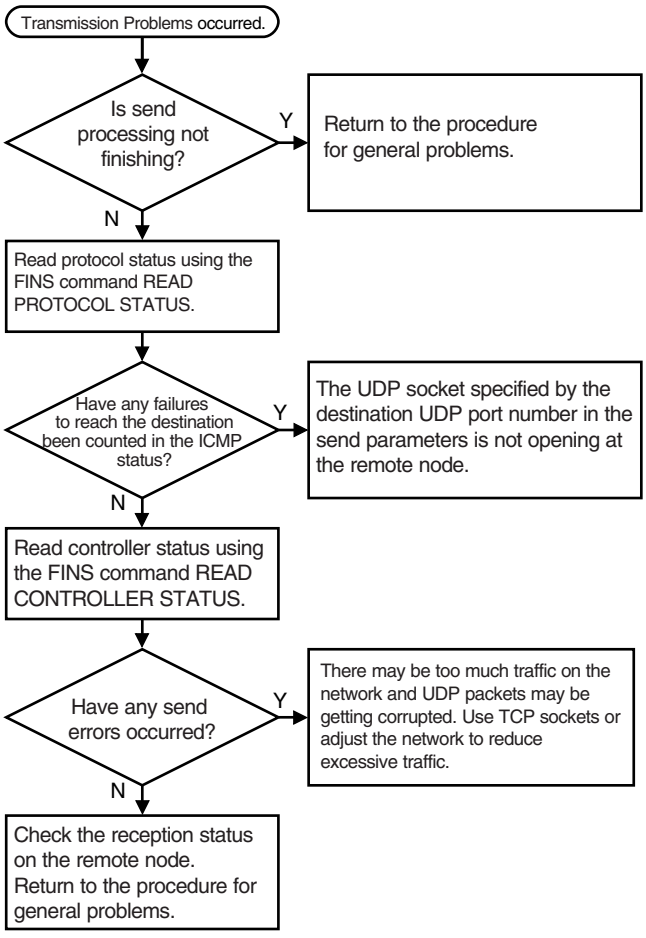

8-4-4 TCP Socket Problems

General Problems

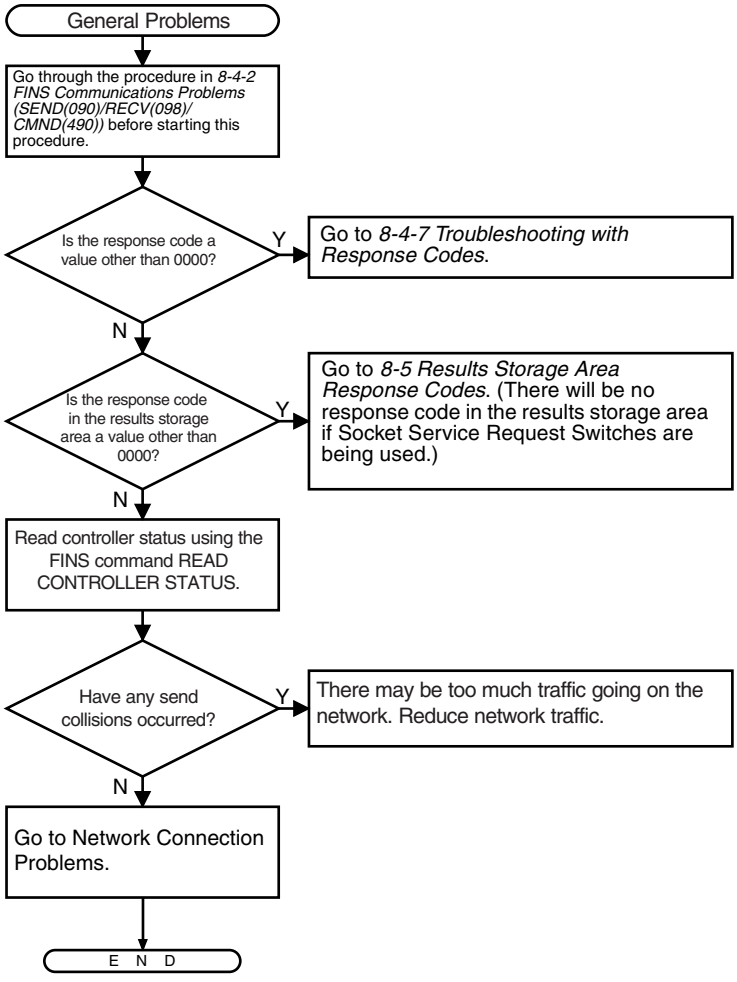

Opening Problems

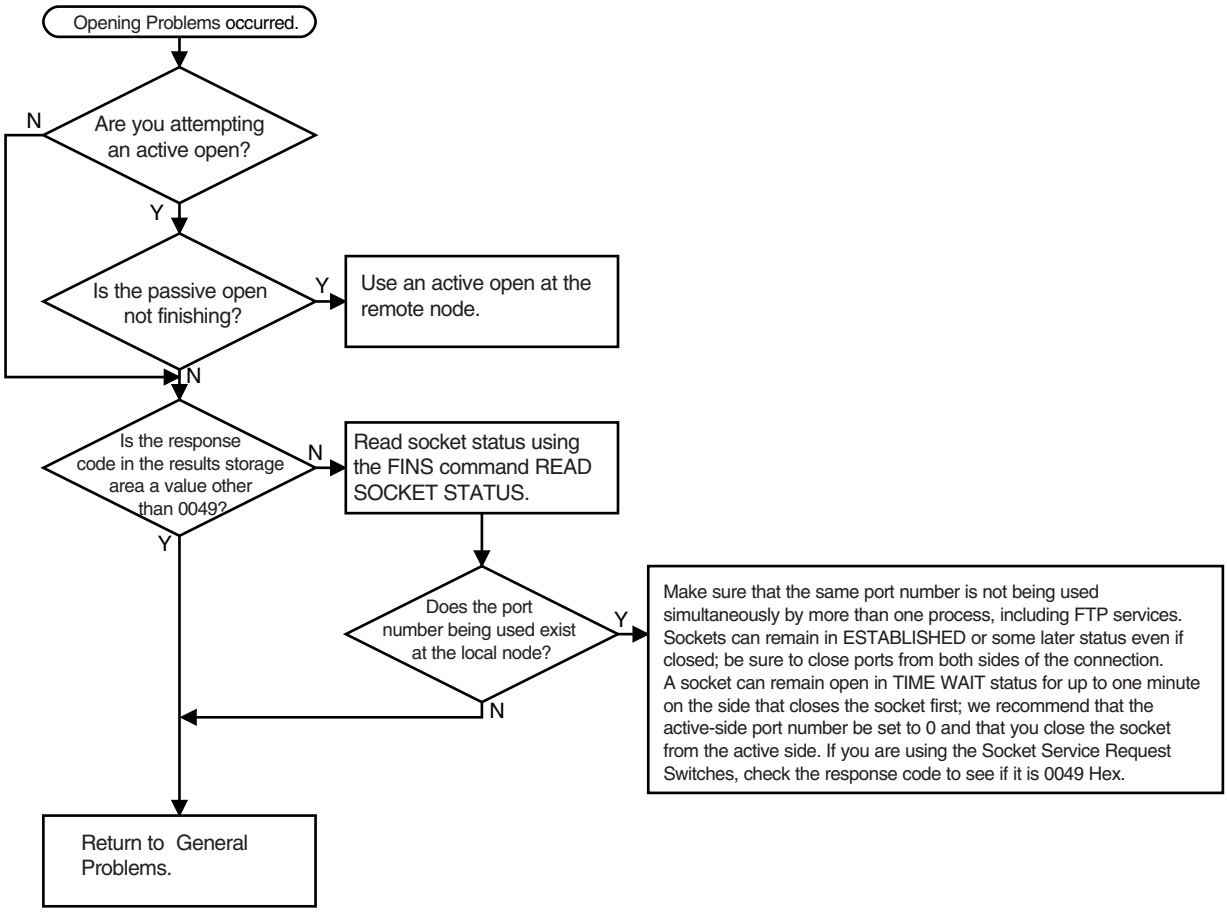

Closing Problems

Refer to *General Problems* on page 218.

Reception Problems

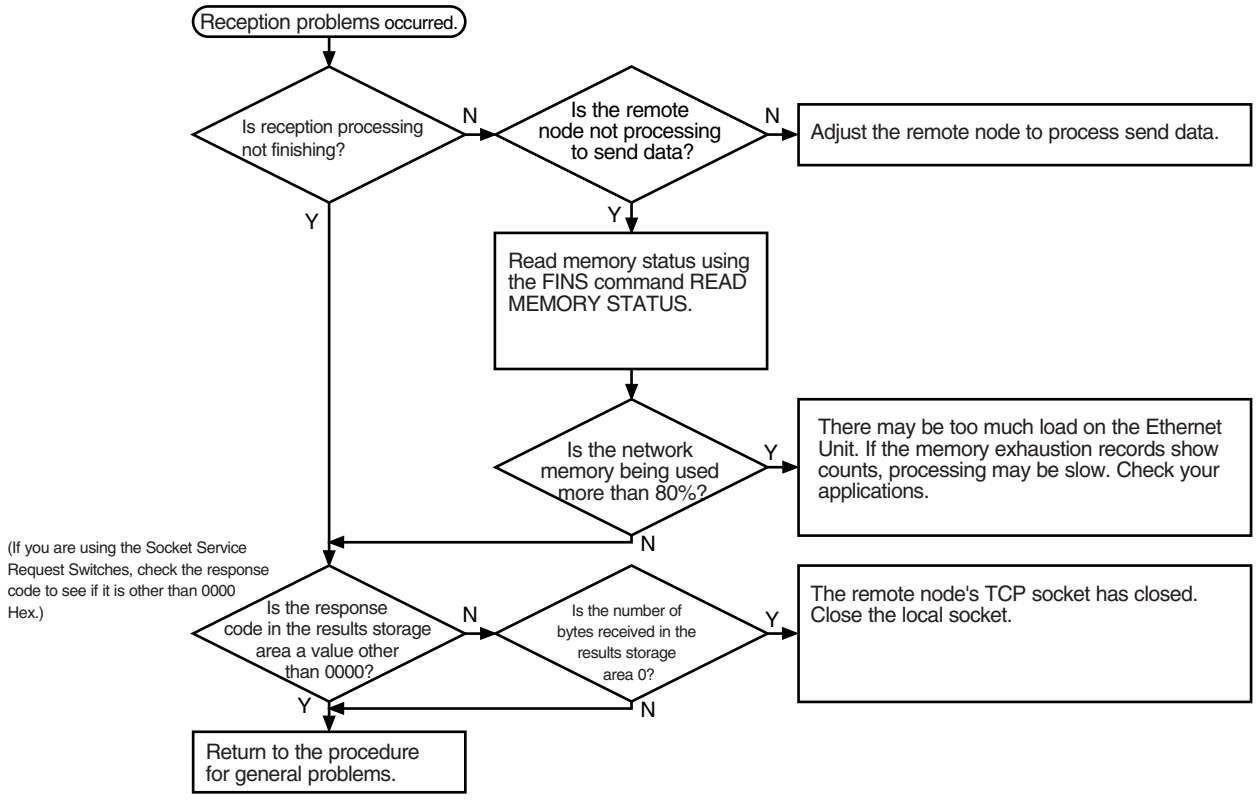

Transmission Problems

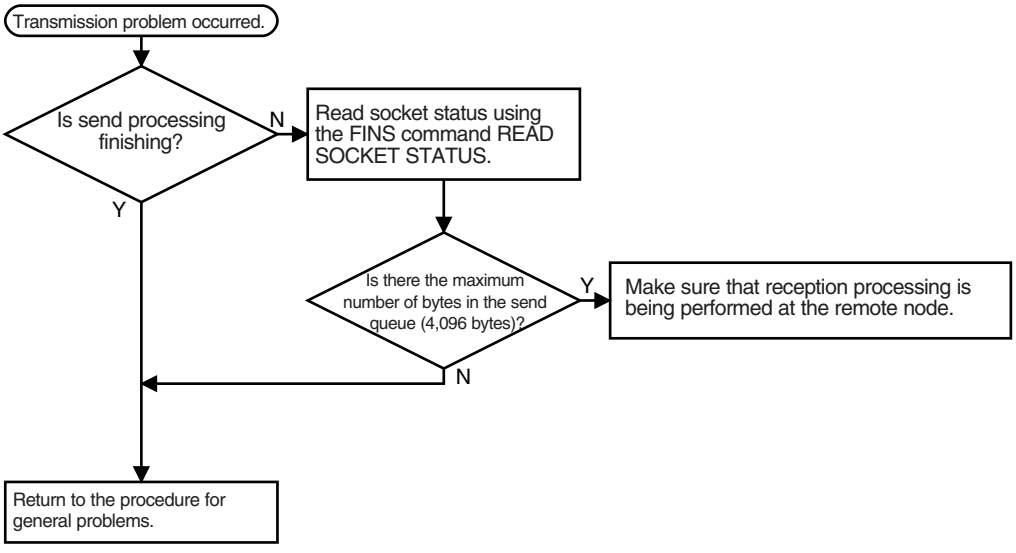

8-4-5 FTP Service Problems

Connection Problems

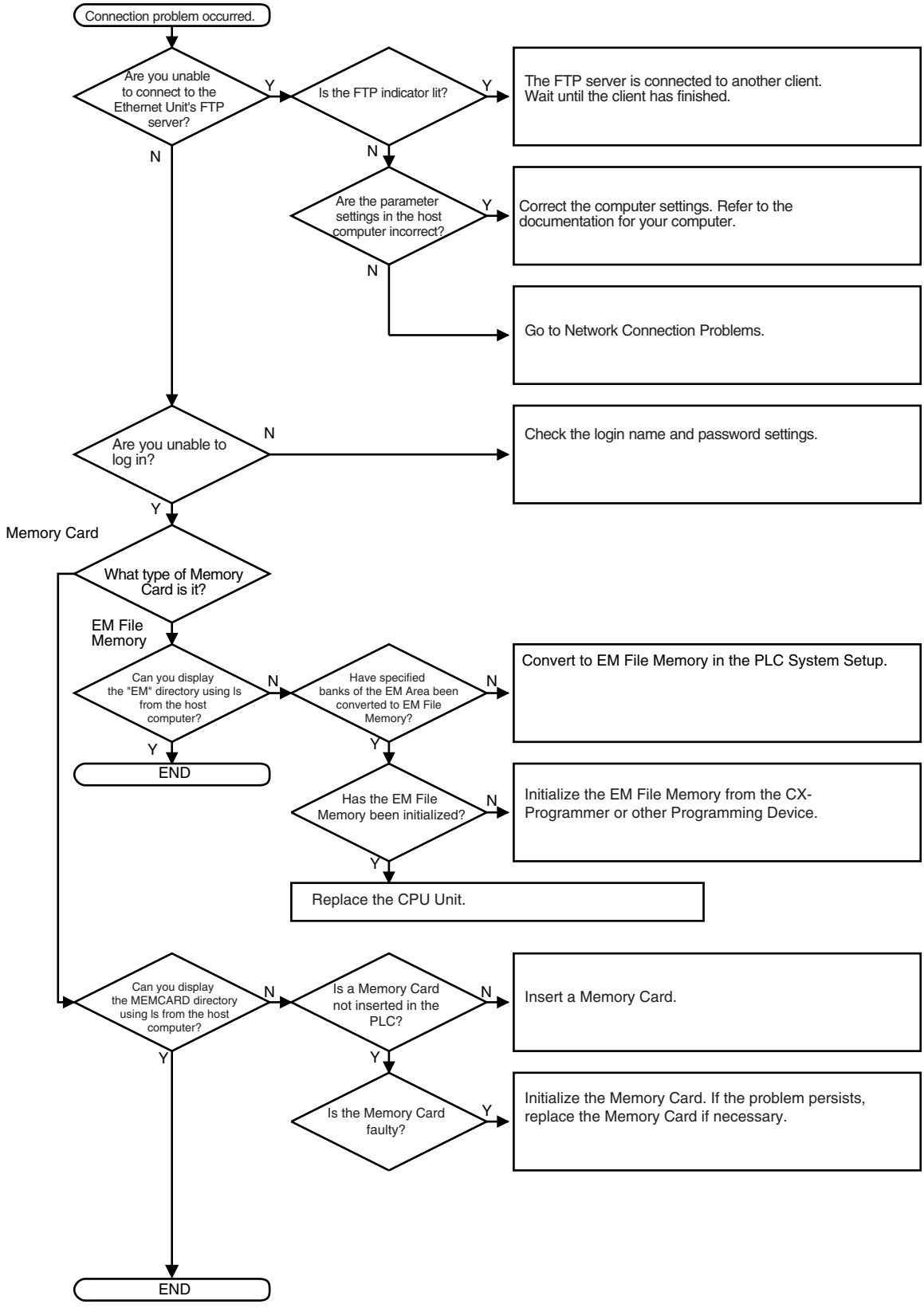

File Transfer Problems

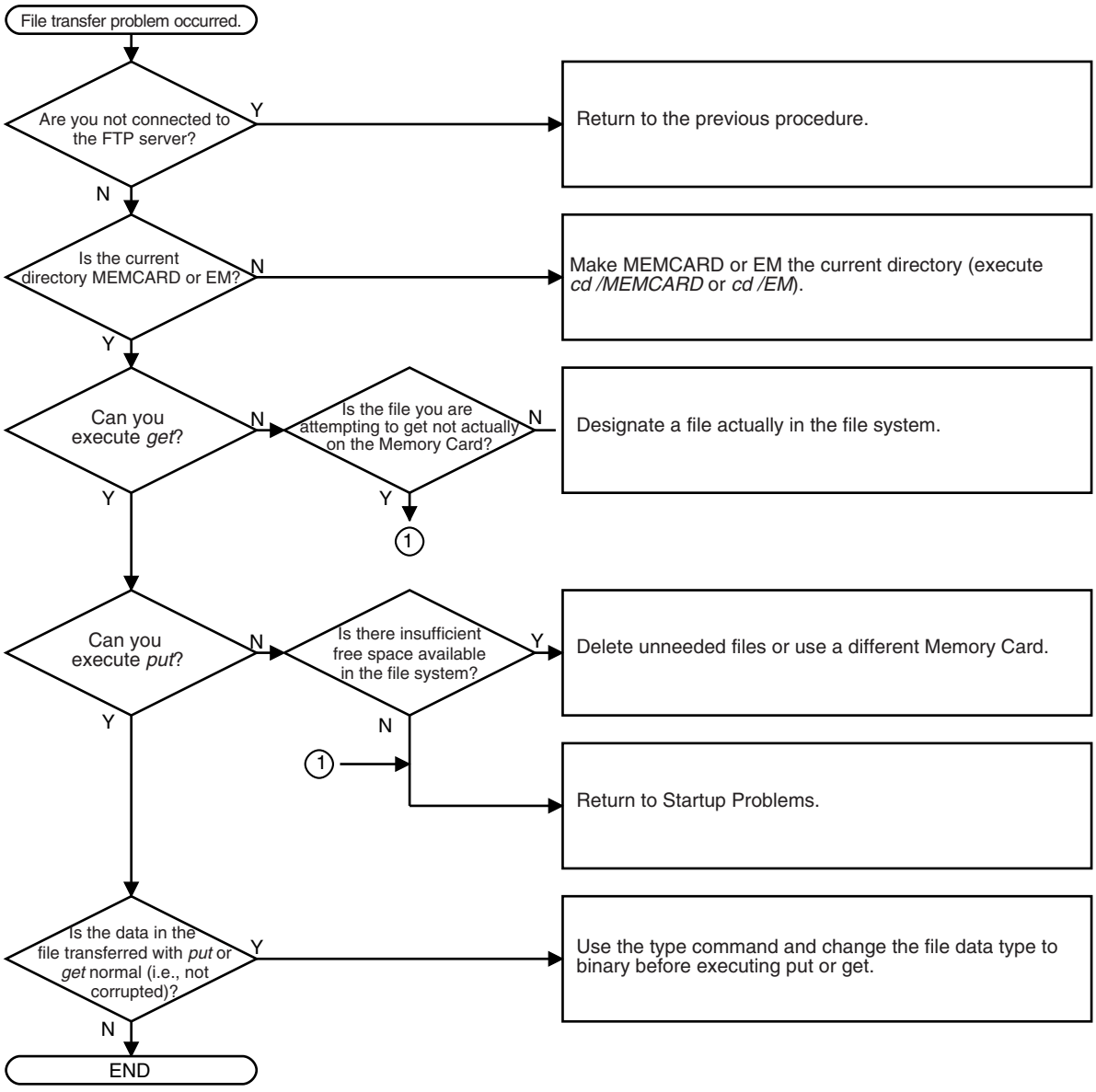

8-4-6 Network Connection Problems

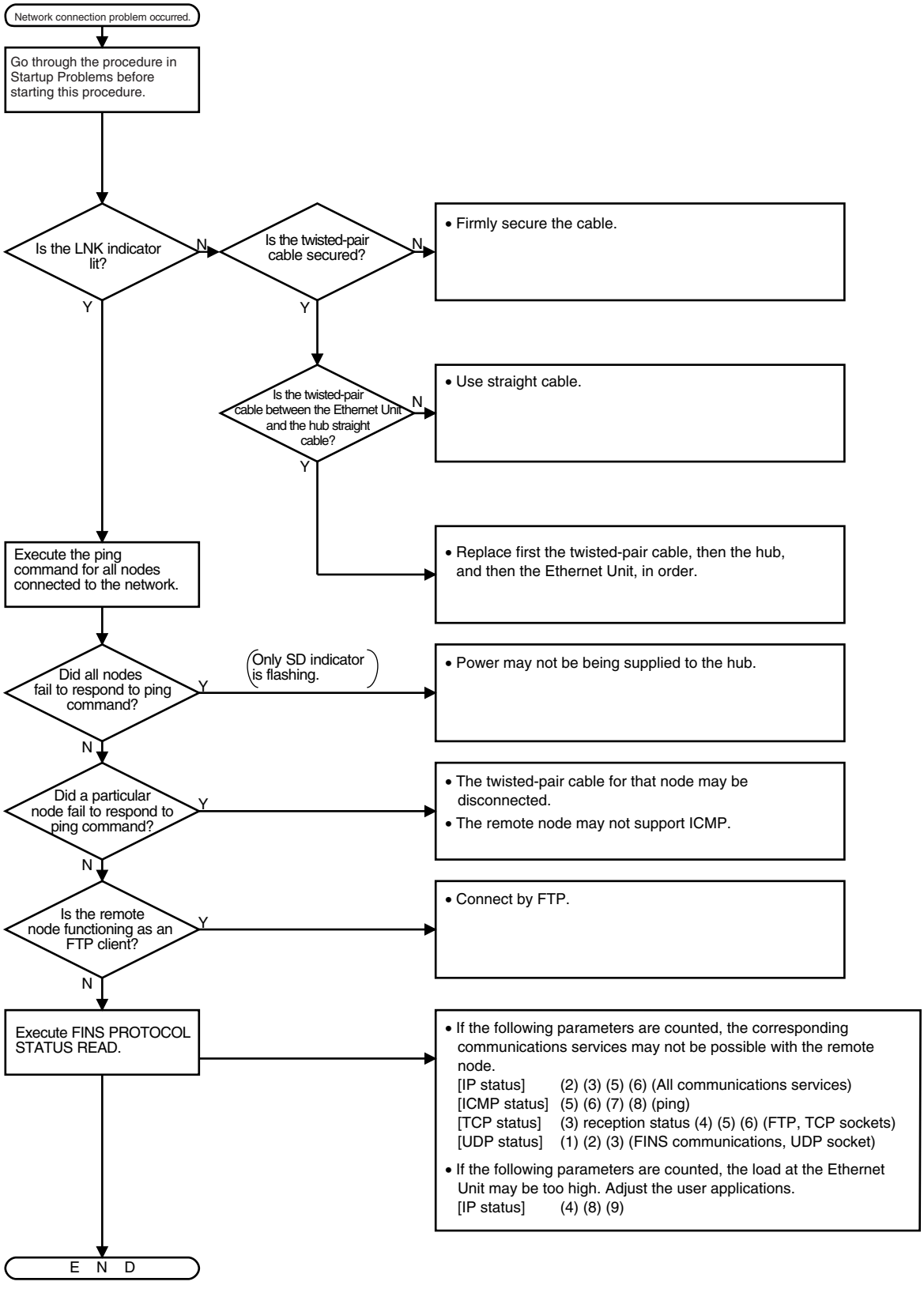

Mail Not being Sent

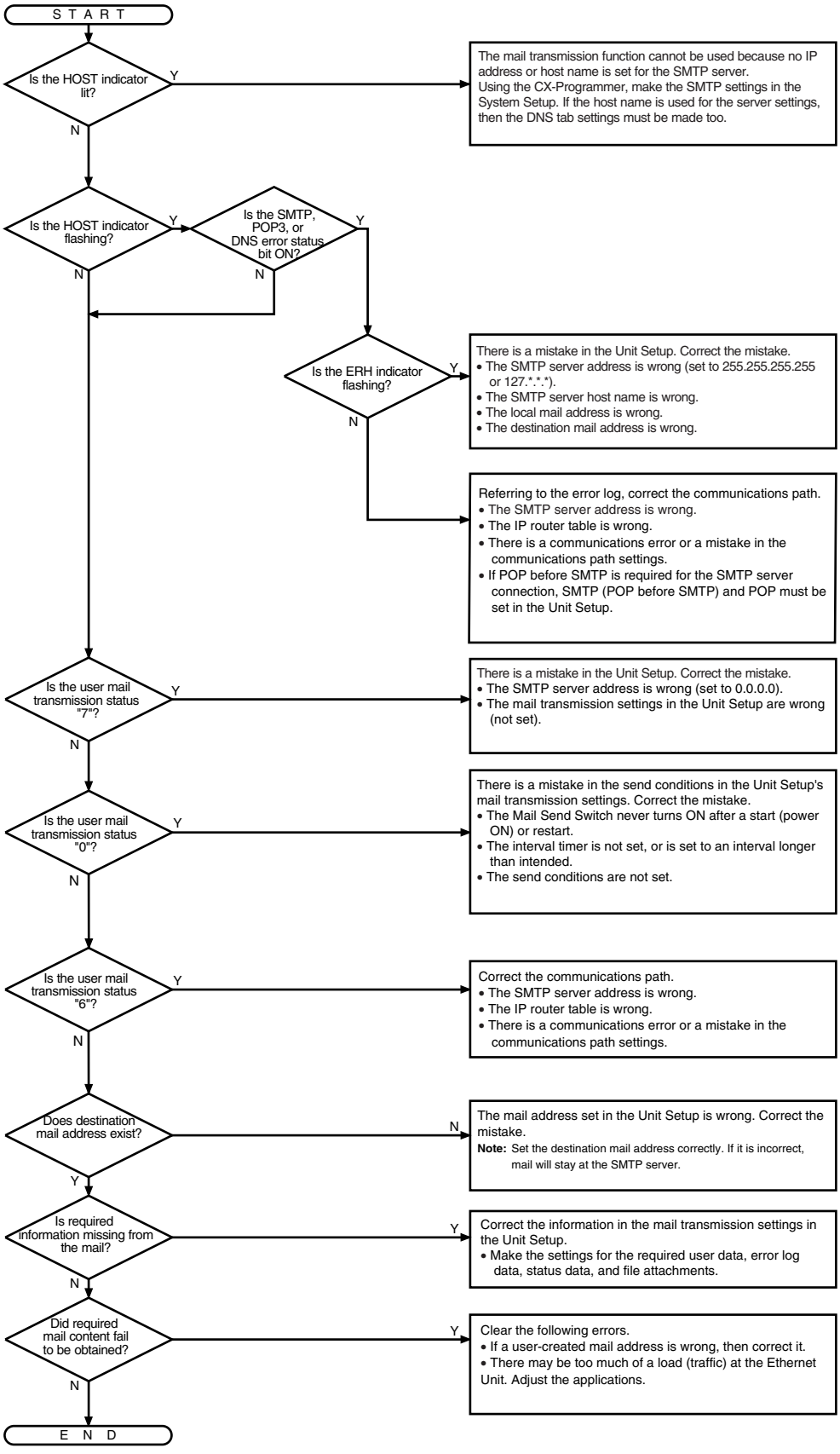

Mail Not being Received

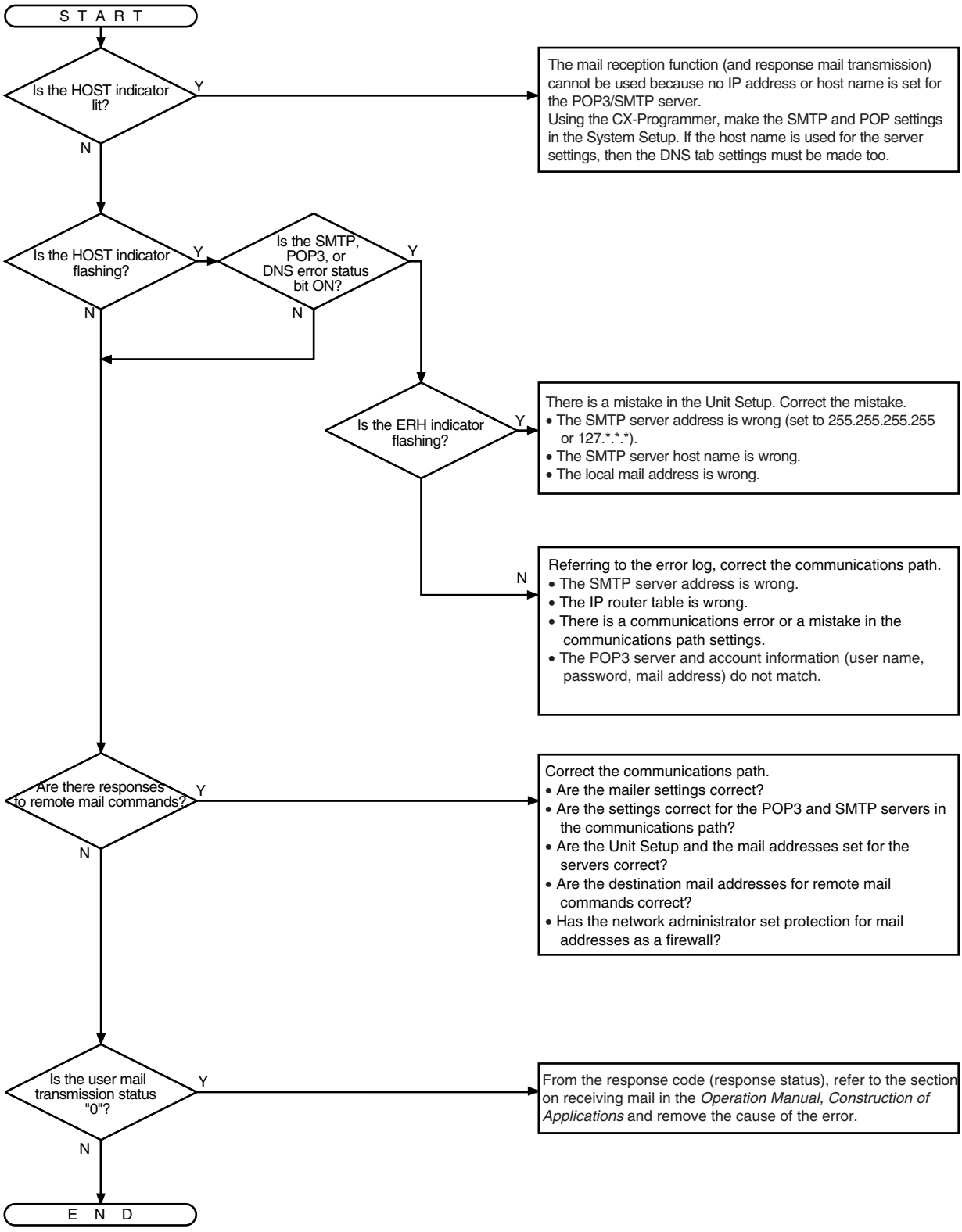

Clock Not being Automatically Adjusted

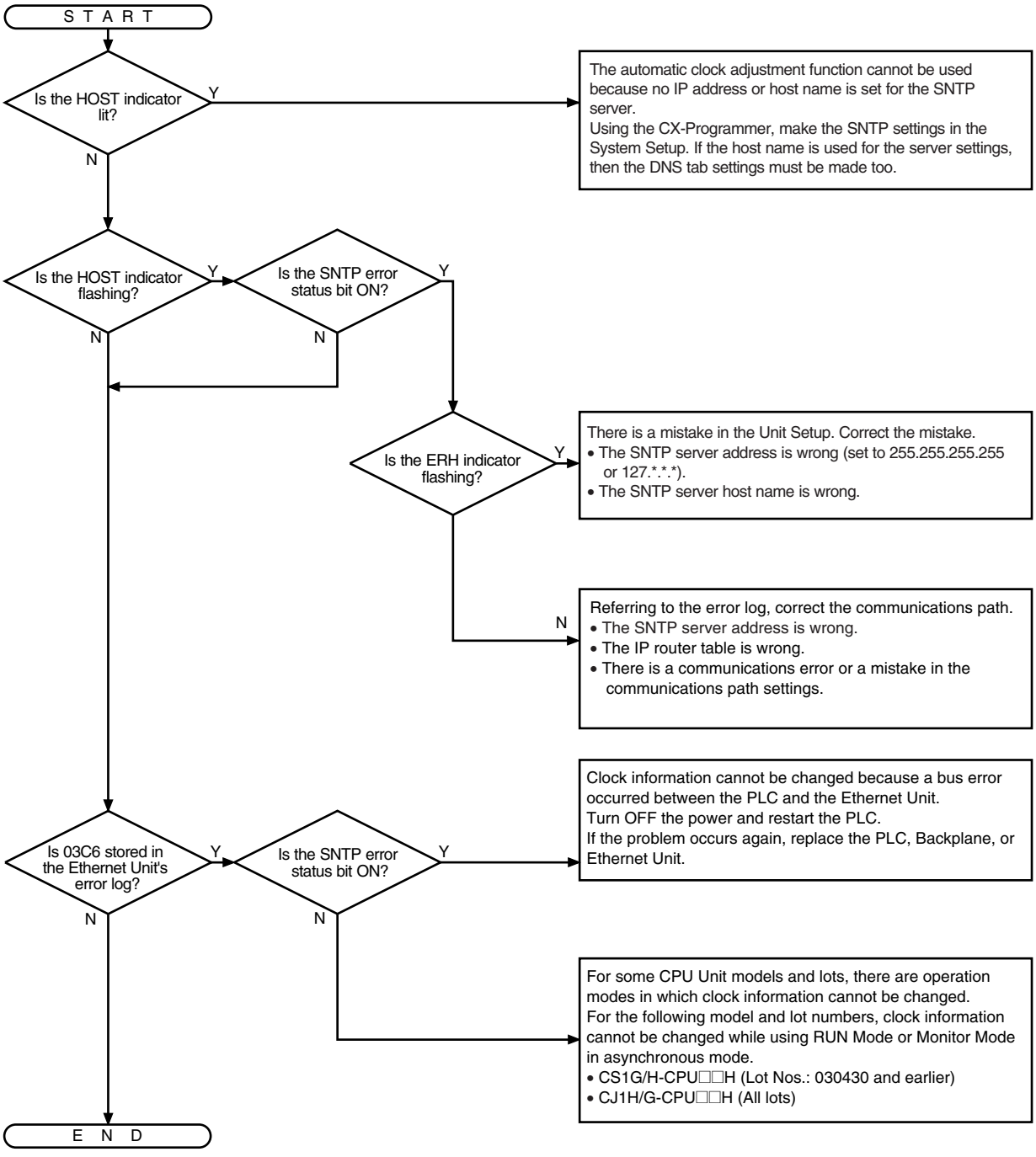

8-4-7 Troubleshooting with Response Codes

You can troubleshoot the errors in FINS communications from the response codes when the SEND(090), RECV(098), or CMND(490) instructions have been used. For the storage areas of the response codes refer to information on page 143 under *6-6-4 Writing Programs*.

The table below lists response codes (main and sub-codes) returned after execution of FINS commands, the probable cause of errors, and recommended remedies. The response codes provided here are for the Ethernet Unit. Refer to the *FINS Command Reference Manual* (W227) or the operation manuals for the relevant Unit for further information on response codes.

The 6th, 7th, and 15th bits of the response codes have specific functions. The 6th bit will be ON when a non-fatal error has occurred in the PC at the remote node; the 7th bit will be ON when a fatal error has occurred in the PC at the remote node; and the 15th bit will be ON when a network relay error has occurred. Refer to information given after the following table for more information on relay errors.

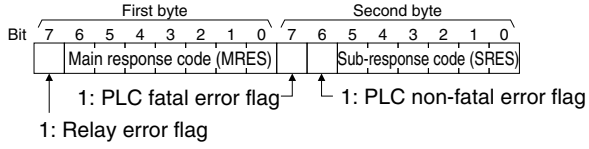

Main code	Sub-code	Check point	Probable cause	Remedy
00: Normal completion	00	---	---	---
01: Local node error	03: Local node send error	---	Send error in local node was caused by lack of available space in internal buffers.	Reduce the load (traffic) on the Ethernet Unit. Check your user applications.
	05: Node address setting error	Local IP address	The network cannot be accessed because the IP address setting is not correct.	Correct the local IP address.
	07: Local node busy, cannot send	System load	The internal buffers are full because there is too much traffic at the local node, preventing data from being sent.	Correct the user application to reduce traffic at the Ethernet Unit.
02: Remote node error	01: Remote node not in network	IP address table, IP router table	IP address of remote node not set correctly in IP address table or IP router table.	Set IP address of remote node into IP address table and, if internetwork transmission is required, into the IP router table.
	02: No such Unit	Control data in instruction	No node with the specified unit address.	Check the remote node's unit address and make sure the correct one is being used in the control data.
	05: Response timeout	Response to CONTROLLER STATUS READ and PROTOCOL STATUS READ FINS command	Message packet was corrupted by transmission error.	Check the protocol and controller status by reading them with FINS commands. Increase the number of transmit retry attempts.
		Control data in instruction	Response time-out, response watchdog timer interval too short.	Increase the value for the response monitor time in the control data.
		Read error log	The transmission frame may be corrupted or the internal reception buffer full.	Read out the error log and correct as required.

Main code	Sub-code	Check point	Probable cause	Remedy
03: Communications controller error	01: Communications controller error	ERC indicator on the Controller	Error occurred in the communications controller, ERC indicator is lit.	Take corrective action, referring to troubleshooting procedures in this section.
	02: CPU Unit error	Remote CPU Unit indicators	CPU Unit error occurred in the PLC at the remote node.	Check CPU Unit indicators at the remote node and clear the error in the CPU Unit (refer to the PC's operation manuals)
	04: Unit number setting error	Unit number	Unit number setting error	Make sure the unit number is within the specified range and that the same unit number is not used twice in the same network.
04: Not executable (Service not supported.)	01: Unsupported command	Command code	An undefined command has been used.	Check the command code and be sure the command is supported by the Unit to which you are sending it.
		FINS header frame length	A short frame (4 bytes) is being used for the FINS header frame.	Check the FINS header frame length. The Ethernet Unit does not support short headers.
05: Routing error	01: Routing table setting error	Routing tables	Remote node is not set in the routing tables.	Set the destination address in the routing tables.
	02: Routing tables not registered	Routing tables	Routing tables aren't registered completely.	Set routing tables at the local node, remote node, and any relay nodes.
	03: Routing table error	Routing tables	Routing table error	Set the routing tables correctly.
	04: Too many relays	Network configuration	The maximum number of relay nodes (2) was exceeded in the command.	Redesign the network or reconsider the routing table to reduce the number of relay nodes in the command. Communications are possible on three network levels, including the local network.
10: Command format error	01: Command too long	Command data	The command is longer than the max. permissible length.	Check the command format of the command and set it correctly. Be sure broadcast transmissions don't exceed 1,473 bytes.
	02: Command too short	Command data	The command is shorter than min. permissible length.	Check the command format of the command and set it correctly.
	03: Element-data mismatch	Command data	The designated number of data items differs from the actual number in the command data.	Check the number of items and the data, and make sure that they agree.
	05: Header parameter error	Command data	Data for another node on the same network was received from the network.	Check the header parameters in the command data and be sure the correct command format is being used.
			An attempt was made to send response data for a broadcast address.	

Main code	Sub-code	Check point	Probable cause	Remedy
11: Parameter error	00: Parameter error	Parameters in command data	The parameters in the command data are incorrect. The UDP/TCP socket number was not within the proper range. The local UDP port number might be set to 0.	Check the parameters. Be sure the socket number is between 1 and 8. Set the Local UDP port number correctly.
	01: No area specification	Memory area code in command data	A correct memory area code has not been used or EM Area is not available.	Check the command's memory area code in the Results Storage Area and set the appropriate code.
	03: Address specification out of range	First word address in command data	The first word is in an inaccessible area or the bit number is not 00.	Set a first word that is in an accessible area. The bit number must be 00 for Ethernet Units.
	04: Address range exceeded	Command data	The address set in the command is not correct.	Correct the address in the command data, being sure that the start address plus the number of words does not exceed accessible memory.
	0B: Response too long	Command data	The response frame is too long.	Correct the number of data elements or other parameters in the command data for which the response is being returned.
	0C: Parameter error	Parameters in command data	Parameters are set incorrectly in the command data.	Check the command data and correct any parameters that are incorrect.
21: Cannot write	08: Cannot change	IP address conversion method	With respect to a FINS node address that could not be dynamically changed, a FINS message was received from an IP address that differed from the Unit Setup.	Referring to *SECTION 5 Determining IP Addresses*, correct the relationships between IP addresses and FINS node addresses.

Main code	Sub-code	Check point	Probable cause	Remedy
22: Status error (operating mode disagreement)	0F: Service in progress, cannot perform operation	Socket status area	The same socket service is already in progress at the specified socket number.	Use the socket status flag in PC memory to be sure that socket service has finished before starting services again.
	10: Socket not open	Socket status area	The specified socket is not open.	Open the socket. For TCP sockets, be sure to wait until connection is made.
	11: Local node busy, cannot send	System load	The internal buffers are full because there is too much traffic at the local node, preventing data from being sent.	Correct the user application to reduce traffic at the Ethernet Unit.
	20	Unit settings	The socket is not open for System Settings.	Correct the settings for the Unit Setup, the FINS/TCP connection number, the remote IP address, and the remote port number.
	21		The socket is not open because of the remote node conversion command for the FINS/TCP connection.	
	22		The socket is reopening because the connection to the remote node has closed.	
	23		The socket is reopening because of a reception error.	
	24		The socket is reopening because of a transmission error.	
	25		The socket is reopening because RST received in response to keep-alive.	
	26: FINS/TCP not connected		The socket is reopening because of no keep-alive response.	
	30: Connection not establish	Command data	A connection is already established with the specified remote node.	Correct the settings for the FINS/TCP connection number, the remote IP address, and the remote port number.
	31: Connection cannot be changed	Unit settings and command data	The specified connection number is not set as a FINS/TCP client in the Unit Setup.	Correct the settings for the Unit Setup, the FINS/TCP connection number, the remote IP address, and the remote port number.
	32: Service stopped, cannot perform operation	Command data	While a remote node change was being processed for the specified connection number, a request for a change was received and the processing was stopped.	Correct the settings for the FINS/TCP connection number, the remote IP address, and the remote port number.
	40: Incorrect socket service mode	High-speed option for socket service in Unit settings	The high-speed option for the socket service was enabled in the Unit settings, and the socket service was used with a CMND(490) instruction.	Disable the high-speed option or, if it remains enabled, use the socket service by manipulating specific bits.
23: Environment error (no such Unit)	05: Parameter error	Unit settings	IP address conversion failed.	Check the IP address and subnet mask in the System Setup and be sure that settings are correct.
	07: Configuration error	IP address conversion in Unit settings	IP address conversion is set for automatic conversion only.	Check the mode settings in the System Setup. This error will be generated for the READ IP ADDRESS TABLE command only.

Network Relay Errors

For network relay errors using SEND(090) or RECV(098), check the path of the command using the routing tables and the nature of the error using the response code to eliminate the cause of the error.

For network relay errors using CMND(490), the location of the relay error is recorded in the second through third words of the response, as shown below.

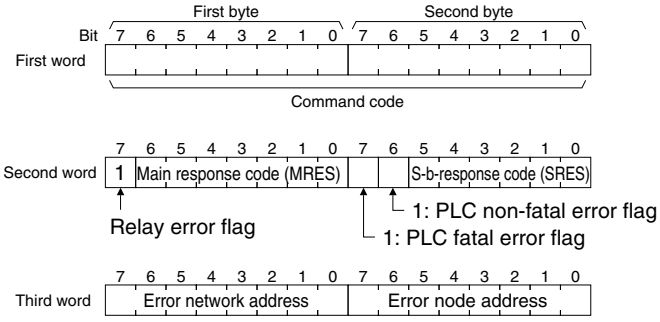

8-5 Results Storage Area Response Codes

The response codes stored in the Results Storage Area can be used to troubleshoot socket service problems. Refer to *Socket Services Parameter Area 1 to 8 (Ethernet Unit to CPU Unit)* on page 88 for the location of the response codes stored in the Results Storage Area.

The UNIX socket service error messages corresponding to the response codes are given in the following table. Refer to the documentation for the devices involved when communicating between an Ethernet Unit and other devices.

Response code	UNIX error message	Description	Probable remedy
0003	ESRCH	No such process	Close the local socket and try reopening it.
0006	ENXIO	No such device or address	
0009	EBADF	Bad file number (incorrect socket specification)	
000D	EACCES	Permission denied (Broadcast address specified for remote IP address for active TCP open)	Check the IP address of the remote node and try to reconnect.
000E	EFAULT	Bad address (copy failed between kernel and user area)	Close the local socket and try reopening it.
0011	EEXIST	File exists	
0016	EINVAL	Invalid argument (socket library argument error)	
0018	EMFILE	Too many open files (More than 32 sockets)	
0020	EPIPE	Broken pipe (remote node closed socket)	Close the local socket.
003C	EPROTONO-SUPPORT	Protocol not supported (protocol other than UDP, TCP, or RAW specified)	Close the local socket and try reopening it.
003D	EPROTOTYPE	Protocol wrong type for socket	
003E	ENOBUFS	No buffer space available	There is too much load (traffic) on the Ethernet Unit. Check your user applications.

Response code	UNIX error message	Description	Probable remedy
003F	EISCONN	Socket is already connected (connection attempted to open socket)	Close the local socket and try reopening it.
0040	ENOTCONN	Socket is not connected (send attempted to closed socket)	
0041	EALREADY	Operation already in progress (connection attempted to existing non-block connection)	
0042	EMSGSIZE	Message too long	Check the length of send data. UDP or TCP: 1 to 1,982 bytes UDP broadcasts: 1 to 1,472 bytes
0043	EDESTADDRREQ	Destination address required (destination address not specified)	Close the local socket and try reopening it.
0044	ENOPROTOOPT	Protocol not available (unsupported option specified)	
0045	ECONNABORTED	Software caused connection abort (another task closed socket)	
0046	EINPROGRESS	Operation now in progress (non-block connection ended during processing)	
0047	ENOTSOCK	Socket operation on non-socket	
0048	EOPNOTSUPP	Operation not supported on socket	
0049	EADDRINUSE	Address already in use (UDP or TCP open request sent for port already in use)	Check the port number. TCP ports can remain unusable for 1 min after closing.
004A	ECONNREFUSED	Connection refused (TCP socket (active open) processing refused by remote node)	Passively open a remote TCP socket, checking the remote IP address and remote TCP port number.
004B	ECONNRESET	Connection reset by peer (TCP socket closed by remote node)	Close the local socket and try reconnecting.
004C	EADDRNOTAVAIL	Can’t assign requested address (mistake in remote IP address)	Check the setting of the remote IP address and try reconnecting.
004D	EAFNOSUPPORT	Address family not supported by protocol family	Close the local socket and try reopening it.
004E	ENETUNREACH	Network is unreachable	Set the path to the remote node in the IP router table.
004F	EHOSTDOWN	Host is down	Check the remote host and communications path.
0050	EWOULDBLOCK	Operation would block	Close the local socket and try reopening it.
0051	EHOSTUNREACH	No route to host	The specified node does not exist on the designated IP network segment. Check the communications path.
0053	ETIMEDOUT	Connection timed out (TCP timed out)	Check the remote host and communications path.
0063	ESELABORT	Used for internal Ethernet Unit processing	Close the local socket and try reopening it.
0066	(None)	Internal memory cannot be allocated for processing; the service cannot be provided.	Traffic is too high at the Ethernet Unit. Correct the user application to reduce traffic at the Ethernet Unit.
0080	(None)	Timed out for passive TCP open request	Either the remote node is not executing an active TCP open or there is a block on the network.

Response code	UNIX error message	Description	Probable remedy
0081	(None)	Closed by close command during socket servicing	No action is necessarily called for.
0082	(None)	Connection with remote node not achieved for passive TCP open request	The remote IP address and TCP port number settings differ from those of the remote socket (active side).

Appendix A

Ethernet Network Parameters

Parameter	Value	Description
TCP send buffer	4,096 bytes	Maximum capacity of the TCP send buffer
TCP receive buffer	4,096 bytes	Maximum capacity of the TCP receive buffer
UDP send buffer	9,000 bytes	Maximum capacity of the UDP send buffer
UDP receive buffer	9,016 bytes	Maximum capacity of the UDP receive buffer
FINS receive buffer	16,383 bytes	Maximum capacity of the FINS receive buffer
RAW send buffer	2,048 bytes	Maximum capacity of the RAW send buffer
RAW receive buffer	2,048 bytes	Maximum capacity of the RAW receive buffer
Hold timer	75 s	The hold timer is used for active open processing of TCP sockets. An ETIMEDOUT error will occur if connection is not completed within 75 s.
Resend timer	Initial value: 1 s Maximum value: 64 s	The resend timer is used to monitor completion of reception of arrival confirmations when transferring data via socket services, including FTP server and mail transfer TCP sockets. If the timer setting is exceeded before arrival confirmation is received, data is resent. Resends are performed from the first timeout (1 s) through the 12th timeout (64 s). An ETIMEDOUT error will occur after the 12th timeout.
Continue timer	Initial value: 5 s Maximum value: 60 s	The continue timer starts if preparations have been completed to send data but the send window is too small (either 0 or too small) to send the data and the remote node has not requested that communications be restarted. Confirmation of the window size is requested from the remote node when the continue timer times out. The initial value of the timer is 5 s and confirmation processing will continue consecutively with increasingly longer times until the maximum time of 60 s is reached.
2MSL timer	60 s	The 2MSL timer starts at the TCP socket that first closes the socket and will run for 60 s in the TIME_WAIT status.
IP reassemble timer	30 s	A fragmented IP packet is discarded if it cannot be reassembled within 30 seconds.
ARP timer	20 min/3 min	If a complete ARP table entry (with an Ethernet address) is not referred to for 20 minutes, it is removed from the table. An incomplete ARP table entry (no response yet returned to the ARP request) is removed from the table after 3 minutes.
Window size (initial value of maximum window size)	4,096 bytes	The initial value of the maximum capacity used to control the convergence of TCP sockets. Actually, the node negotiates with the remote node and uses the smaller of the values for the two nodes. The window size will fluctuate with the available space in the TCP reception buffers of the remote node when processing communications.
Fragment size	1,500 bytes	Data packets are fragmented into 1,500-byte IP packets. UDP data is separated into 1,472-byte fragments before sending.
Segment size	1,024 bytes	TCP data is separated into 1,024-byte units, unless the segments are different, in which case it will be separated into 536-byte units.
TTL (Time to Live)	30	Decremented each time an IP router is passed.

Appendix B
Buffer Configuration

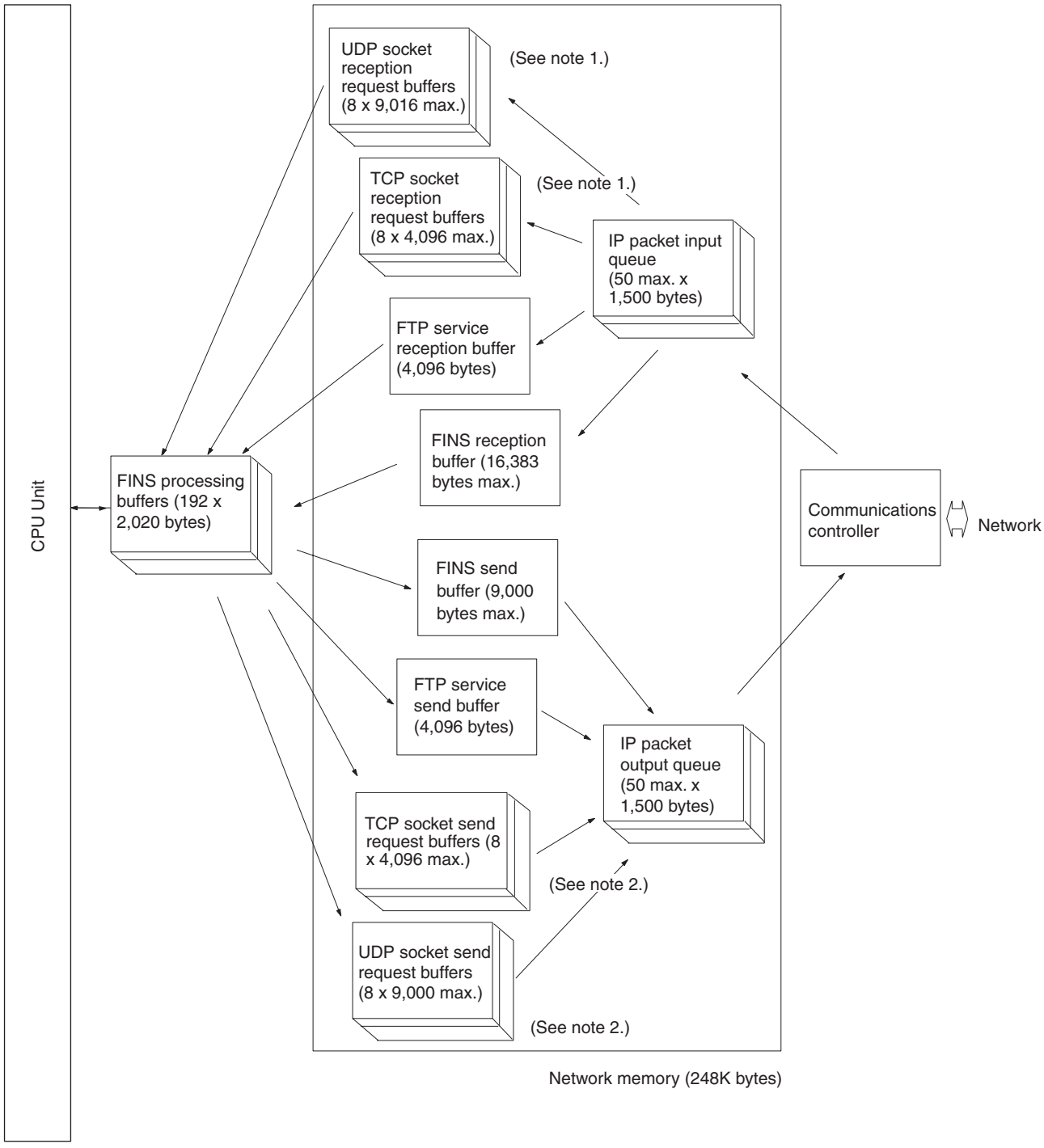

Network Memory

Most of the buffers used for communications servicing by the Ethernet Unit are administered in a buffer configuration called network memory. Network memory consists of 248K bytes of memory divided into short and long buffers. The use of short and long buffers is determined by the status of the various services when the Ethernet Unit is running. The capacity of all buffers cannot be used due to limits in the mounted memory capacity. The status of the short and long buffers can be accessed by execution the FINS command MEMORY STATUS READ (2763).

Note 1. The status of UDP and TCP socket reception request buffers can be accessed by executing the FINS command SOCKET STATUS READ (2764).

2. The status of UDP and TCP socket send request buffers can be accessed by executing the FINS command SOCKET STATUS READ (2764).

Appendix C

TCP Status Transitions

The TCP socket status can be confirmed using the socket status data returned for the FINS command SOCKET STATUS READ (2764).

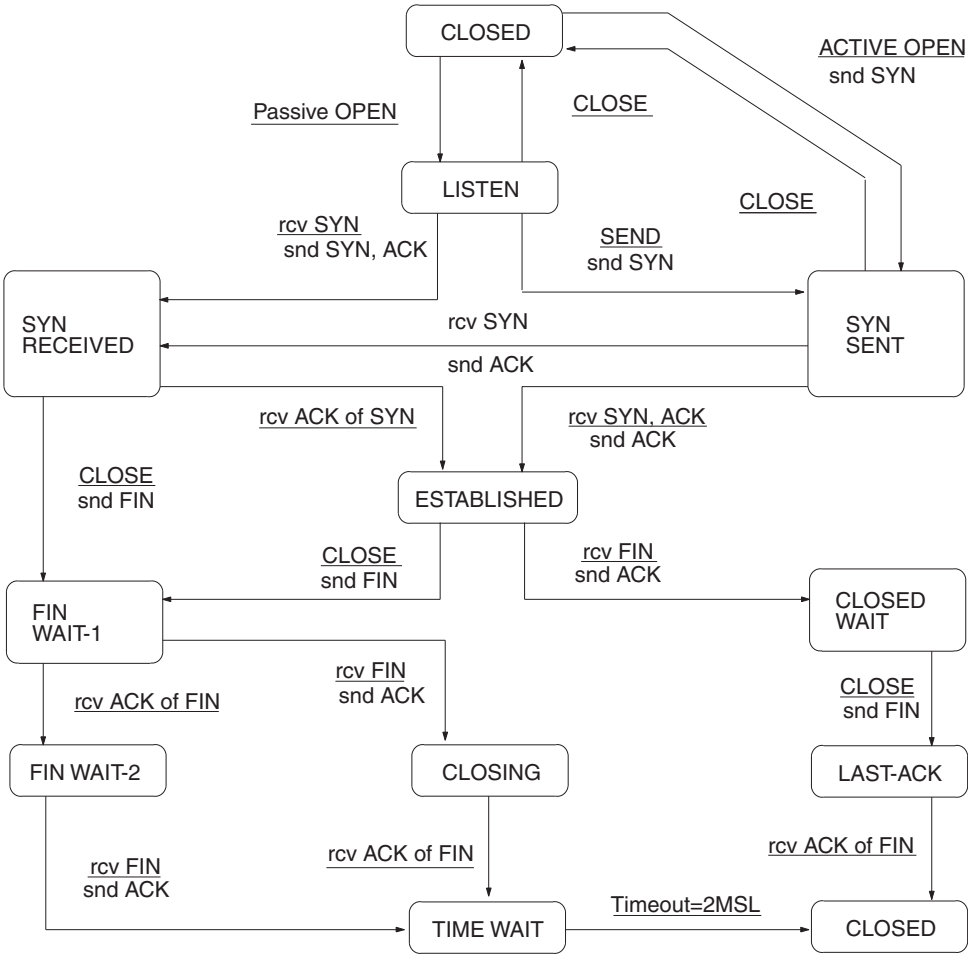

Status	Meaning
CLOSED	Connection closed.
LISTEN	Waiting for connection.
SYN SENT	SYN sent in active status.
SYN RECEIVED	SYN received and sent.
ESTABLISHED	Already established.
CLOSE WAIT	FIN received and waiting for completion.
FIN WAIT 1	Completed and FIN sent.
CLOSING	Completed and exchanged FIN. Awaiting ACK.
LAST ACK	FIN sent and completed. Awaiting ACK.
FIN WAIT 2	Completed and ACK received. Awaiting FIN.
TIME WAIT	After closing, pauses twice the maximum segment life (2MSL).

Appendix D

ASCII Characters

Bits 1 to 4		Bits 5 to 7							
Binary		0000	0001	0010	0011	0100	0101	0110	0111
	Hex	0	1	2	3	4	5	6	7
0000	0	NUL	DLE	Space	0	@	P		p
0001	1	SOH	DC1	!	1	A	Q	a	q
0010	2	STX	DC2	”	2	B	R	b	r
0011	3	ETX	DC3	#	3	C	S	c	s
0100	4	EOT	DC4	$	4	D	T	d	t
0101	5	ENQ	NAK	%	5	E	U	e	u
0110	6	ACK	SYN	&	6	F	V	f	v
0111	7	BEL	ETB	’	7	G	W	g	w
1000	8	BS	CAN	(	8	H	X	h	x
1001	9	HT	EM	)	9	I	Y	i	y
1010	A	LF	SUB	*	:	J	Z	j	z
1011	B	VT	ESC	+	;	K	[	k	{
1100	C	FF	FS	,	<	L	\	l	|
1101	D	CR	GS	-	=	M	]	m	}
1110	E	SO	RS	.	>	N	^	n	~
1111	F	SI	US	/	?	O	_	o	DEL

Appendix E
Maintenance

The Ethernet Unit makes up part of a network. Repair a defective Ethernet Unit as soon as possible as it can have a negative effect on the entire network. We recommend that customers keep one or more spare Ethernet Units to allow immediate recovery of the network.

Replacing an Ethernet Unit

Observe the following precautions when replacing the Ethernet Unit.

- Always turn OFF the power supply before replacing the Ethernet Unit.
- Check that the spare Ethernet Unit is operating normally before replacing a defective Unit with it.
- When returning a defective Unit for repairs, provide as much written information as possible on the symptoms of the problem.
- If a problem occurs with poor contacts, wipe the contacts with a clean cloth soaked with industrial alcohol. Carefully remove any lint remaining on the contacts before replacing the Unit.

Settings after Replacing an Ethernet Unit

After replacing an Ethernet Unit, set the following to the same settings as were used on the previous Unit.

- Unit number
- Node address

Settings after Replacing a CPU

The EEPROM in the PC's CPU holds the information listed below. This information must be stored in any new CPU used to replace a defective one.

- Routing tables
- System Setup for the Ethernet Unit

Appendix F
Inspections

Carry out regular inspections to ensure the Ethernet Unit is functioning perfectly.

Items

Most of the parts that make up an Ethernet Unit are semiconductor components. None of the parts in the Unit will wear out after a specific lifetime, but some parts may deteriorate due to extreme operating condition. Therefore, it is important to inspect the Unit regularly.

Inspection Interval

Normally inspect once or twice per year. Choose the inspection period according to the severity of the operating conditions. New installation should be inspected more frequently until they are judged to be stable.

Inspection Items

Correct any of the items in the table below not conforming to the specified standard.

Item	Details	Standard
Environment	Temperature around Unit	0 to 55°C
	Humidity around Unit	10% to 90% (with no condensation)
	Accumulated dust	No accumulated dust
Mounting	Ethernet Unit firmly attached	No looseness
	Transceiver cable connector fully pushed in	No looseness
	Condition of transceiver cable	No visible abnormality
	Twisted-pair cable connector fully pushed in	No looseness
	Condition of twisted-pair cable	No visible abnormality

Tools Required for Inspection

The following tools are needed to inspect the Ethernet Unit:

Standard Tools

- Flat-blade and Phillips screwdrivers
- Tester or digital voltmeter
- Industrial alcohol and a clean cloth

Tools Required Under Special Circumstances

- Synchroscope
- Pen oscilloscope
- Thermometer and hygrometer

Appendix G
Ethernet Unit Web Function

Web Function

Ethernet Units with Unit Ver. 1.3 or later can use a Web browser from a personal computer or other device to easily make the Ethernet Unit's system settings and monitor statuses.

Web Function List

The information displayed on the window from the Web browser for the Ethernet Unit is as follows:

Unit Setup Functions

Menu item	Parameter item	Corresponding CX-Programmer function
Settings		CX-Programmer's Ethernet Unit Setup window
IP address and Protocols		---
System		---
	IP address	Unit Setup window- Setup Tab - *IP Address*
	Net mask	Unit Setup window- Setup Tab - *Sub-net Mask*
	Enable CIDR	Unit Setup window - Setup tab - Sub-net Mask - Enable CIDR
	FINS/UDP Port	Unit Setup window- Setup Tab - *FINS/UDP Port*
	FINS/TCP Port	Unit Setup window- Setup Tab - *FINS/TCP Port*
	Address conversion mode	Unit Setup window- Setup Tab - *Conversion*
	Auto (Dynamic)	Unit Setup window- Setup Tab - *Auto (dynamic)*
	Auto (Static)	Unit Setup window- Setup Tab - *Auto (Static)*
	Manual	Unit Setup window- Setup Tab - *Table used*
	Auto & Manual	Unit Setup window- Setup Tab - *Mixed*
	Destination IP address is changed dynamically	Unit Setup window- Setup Tab - *Destination IP Address (Change Dynamically)*
	Destination IP address is Not changed dynamically	Unit Setup window- Setup Tab - *Destination IP Address (Change Dynamically)*
	ETN11 compatible mode	None
	Broadcast option	Unit Setup window- Setup Tab - *Broadcast*
	Baud rate	Unit Setup window- Setup Tab - *Baud Rate*
	TCP/IP keep-alive	Unit Setup window- Setup Tab - *TCP/IP keep-alive*
	Performance of socket service (High Speed)	Unit Setup window - Setup Tab - Performance of Socket Service - High Speed
	FINS/TCP Protected	Unit Setup window- FINS/TCP Tab - *Use IP address to protect*
	SMTP Server (Host name or IP address)	Unit Setup window- SMTP Tab - *Server specification type*
	POP Server (Host name or IP address)	Unit Setup window- POP Tab - *Server specification type*
	SNTP Server (Host name or IP address)	Unit Setup window- Auto Adjust Time Tab - *Server specification type*
FTP		Unit Setup window- Setup Tab
	Login name	Unit Setup window- Setup Tab - *FTP (Login)*
	Password	Unit Setup window- Setup Tab - *FTP (Password)*
	Port No.	Unit Setup window- Setup Tab - *FTP (Port No.)*
DNS		Unit Setup window- DNS Tab
	IP address of DNS server	Unit Setup window- DNS Tab - *IP Address*
	Port No.	Unit Setup window- DNS Tab - *Port No.*
	Retry timer	Unit Setup window- DNS Tab - *Retry timer*
SMTP		Unit Setup window- SMTP Tab
IP Address (or Host name)		Unit Setup window- SMTP Tab - *IP Address* or *Host name*
	Port No.	Unit Setup window- SMTP Tab - *Port No.*
	Local mail address	Unit Setup window- SMTP Tab - *Local mail address*
	Option (Use POP before SMTP)	Unit Setup window- SMTP Tab - *Use POP before SMTP*

Menu item	Parameter item	Corresponding CX-Programmer function
POP		Unit Setup window- POP Tab
	IP Address (or Host name)	Unit Setup window- POP Tab - *IP Address* or *Host name*
	Port No.	Unit Setup window- POP Tab - *Port No.*
	Mail account	Unit Setup window- POP Tab - *Account Name*
	Mail password	Unit Setup window- POP Tab - *Mail password*
	Server access interval time	Unit Setup window- POP Tab - *Server access interval time*
SNTP		Unit Setup window- Auto Adjust Time Tab
	IP Address (or Host name)	Unit Setup window- Auto Adjust Time Tab - *IP Address* or *Host name*
	Port No.	Unit Setup window- Auto Adjust Time Tab - *Port No.*
	Auto Adjust Time	Unit Setup window- Auto Adjust Time Tab - *Auto Adjust Time*
	Adjust Time	Unit Setup window- Auto Adjust Time Tab - *Adjust Time*
	Retry timer	Unit Setup window- Auto Adjust Time Tab - *Retry timer*
	Option (Get the time info. from the SNTP server)	Unit Setup window- Auto Adjust Time Tab - *Get the time information from the SNTP server*
HTTP		Unit Setup window- HTTP Tab
	WEB Password	Unit Setup window- HTTP Tab - *Password*
	WEB Password (Confirm)	None (for confirmation of Web password)
	Port No.	Unit Setup window- HTTP Tab - *Port No.*
	Option (Use Web Function)	Unit Setup window- HTTP Tab - *Use Web Function*
IP address/router table		Unit Setup window- Setup Tab
IP address table		Unit Setup window- Setup Tab - *IP Address Table*
IP router table		Unit Setup window- Setup Tab - *IP Router Table*
FINS/TCP		Unit Setup window- FINS/TCP Tab
Connection (1-8)		Unit Setup window- FINS/TCP Tab - *No. (1 to 8)*
	FINS/TCP server / client	Unit Setup window- FINS/TCP Tab - *FINS/TCP Mode*
	IP Address	Unit Setup window- FINS/TCP Tab - *IP Address*
	Auto-allocated FINS node	Unit Setup window- FINS/TCP Tab - *Auto allocated FINS node*
	keep-alive	Unit Setup window- FINS/TCP Tab - *keep-alive*
Connection 9-16		Unit Setup window- FINS/TCP Tab - *No. (9 to 16)*
Send Mail		---
Mail address		Unit Setup window- Mail Address Tab
	Mail address 1	Unit Setup window- Mail Address Tab - *Mail address 1*
	Mail address 2	Unit Setup window- Mail Address Tab - *Mail address 2*
Send Mail		Unit Setup window- Send Mail Tab
	Trigger No.	Unit Setup window- Send Mail Tab - *Trigger No.*
	Trigger option	Unit Setup window- Send Mail Tab - *Trigger No.*
	Not Use	Unit Setup window- Send Mail Tab - *Send mail upon trigger*
	Software switch	Unit Setup window- Send Mail Tab - *Software switch*
	Word value change	Unit Setup window- Send Mail Tab - *Word value change*
	Bit value change	Unit Setup window- Send Mail Tab - *Bit value change*
	ETN condition change	Unit Setup window- Send Mail Tab - *ETN condition (at error storage)*
	CPU condition change	Unit Setup window- Send Mail Tab - *CPU condition*
	Periodic timer	Unit Setup window- Send Mail Tab - *Periodic timer*
	Mail address	Unit Setup window- Send Mail Tab - *Mail address*
	Interval time	Unit Setup window- Send Mail Tab - *Interval time*
	Include data	---
	Send user data	Unit Setup window- Send Mail Tab - *Send user data*
	Area	Unit Setup window- Send Mail Tab - *User defined mail address*
	Send Error Log information	Unit Setup window- Send Mail Tab - *Send Error Log informat.*
	Send Status information	Unit Setup window- Send Mail Tab - *Send status information*
	Send file data / IO memory data	Unit Setup window- Send Mail Tab - *Send file data / IO memory data*
	File data	Unit Setup window- Send Mail Tab - *File data*
	IO data (IOM)	Unit Setup window- Send Mail Tab - *I/O data (.IOM)*
	IO data (TXT)	Unit Setup window- Send Mail Tab - *I/O data (.TXT)*
	IO data (CSV)	Unit Setup window- Send Mail Tab - *I/O data (.CSV)*
	File name	Unit Setup window- Send Mail Tab - *Attached file name*
	Area	Unit Setup window- Send Mail Tab - *I/O memory data*

Menu item	Parameter item	Corresponding CX-Programmer function
Receive Mail		Unit Setup window- Receive Mail Tab
	Mail Address Protection Setting	Unit Setup window- Receive Mail Tab - *Protect using mail address*
	Attached File Enable Settings	Unit Setup window- Receive Mail Tab - *Receive file with specified extension only*
	Command Enable Setting	Unit Setup window- Receive Mail Tab - *Receive specified commands only*

Status Monitor

Menu item	Corresponding CX-Programmer function
Status View	---
Unit information	FINS(0501): CONTROLLER DATA READ
Unit status	FINS(0601): CONTROLLER STATUS READ
Protocol status	---
IP status	FINS(2762): PROTOCOL STATUS READ, IP status
ICMP status	FINS(2762): PROTOCOL STATUS READ, ICMP status
TCP status	FINS(2762): PROTOCOL STATUS READ, TCP status
UDP status	FINS(2762): PROTOCOL STATUS READ, UDP status
Memory status	FINS(2763): MEMORY STATUS READ
Socket status	FINS(2764): SOCKET STATUS READ
Fins status	Ethernet Unit's internal node table
Mail log	RECEIVE MAIL: READ MAIL LOG
Error log	FINS(2102): READ ERROR LOG
Send mail status	Mail send status 1 to 8

Web Function Password

To prevent unauthorized access to the Ethernet Unit from a Web browser, password entry is required to enable display and setting of the parameters. Even if the password has not been set, the default password "ETHERNET" must be entered. To change this password, set a new password in the HTTP Tab of the CX-Programmer's Unit Setup, or use the Web function and select ***Settings - IP address and Protocols - HTTP***.

Note 1. Setting a new Web function password as soon as possible is recommended to prevent unauthorized access.

2. The Web function can also be disabled by setting in the Web function option.

Using the Web Function (Setting Password)

The Ethernet Unit's Web window is displayed by accessing the following URL from the Web browser.

URL: http://(Ethernet Unit's IP address)/0

Use the following procedure to set the Unit's system settings (HTTP password setting in this example) using Internet Explorer version 6.0 and the Ethernet Unit's Web function.

1. Connect to the Ethernet Unit from the Web browser.
   In this example, the URL is specified as http://192.168.250.1/0 using the Ethernet Unit's default IP address.

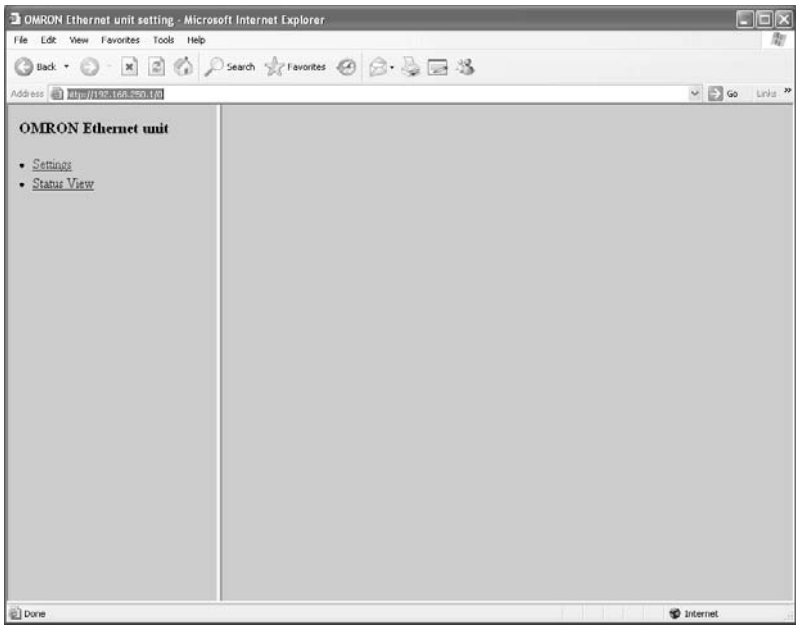

2. Select ***Settings*** from the menu on the left side of the window to display the *Settings Menu*.

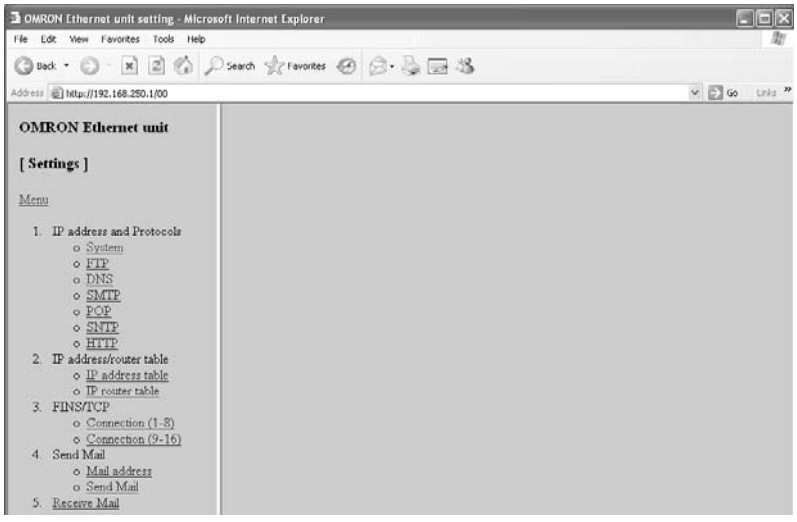

3. Select ***1. IP address and Protocols - System*** to display the *Login Password* field on the right of the window.

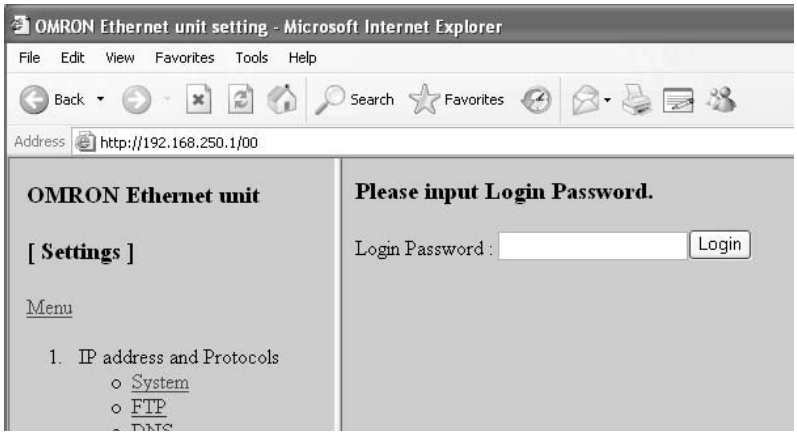

4. Input the default password (“ETHERNET” all in upper case) and click the **Login** Button.

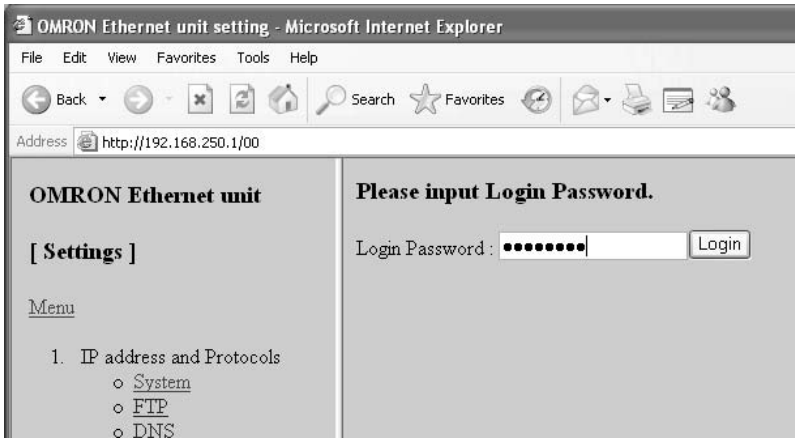

When login is successful, the following setting window will be displayed.

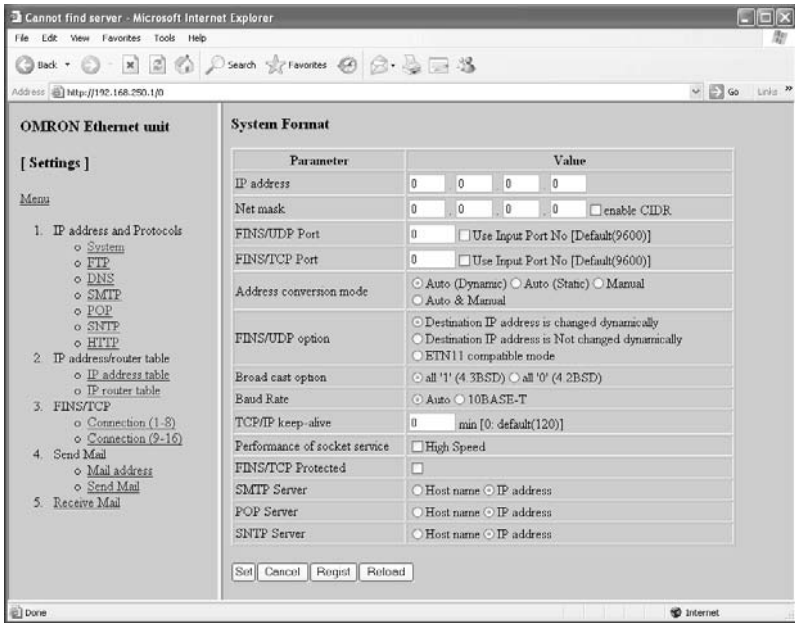

5. Select HTTP from the menu to display the HTTP setting items.
The following window shows the default settings.

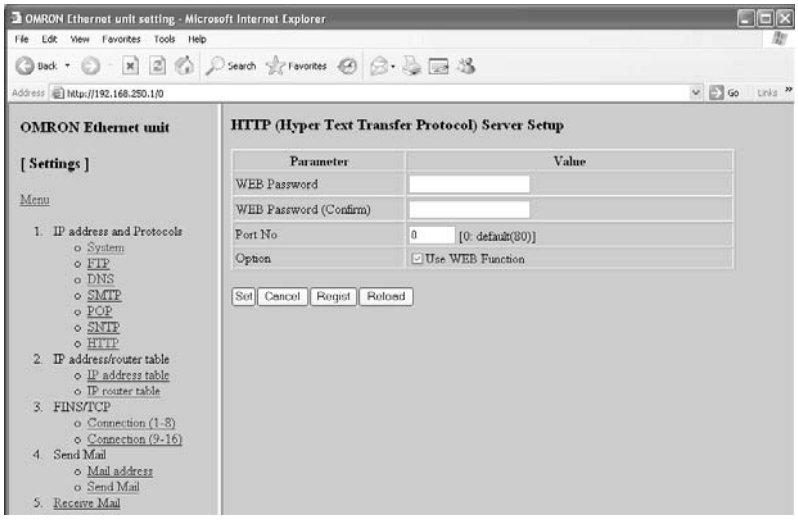

6. Make the required settings (i.e., the password in this example).
   To prevent incorrect password entry, set the same password in the *WEB Password* field and *WEB Password (Confirm)* field.

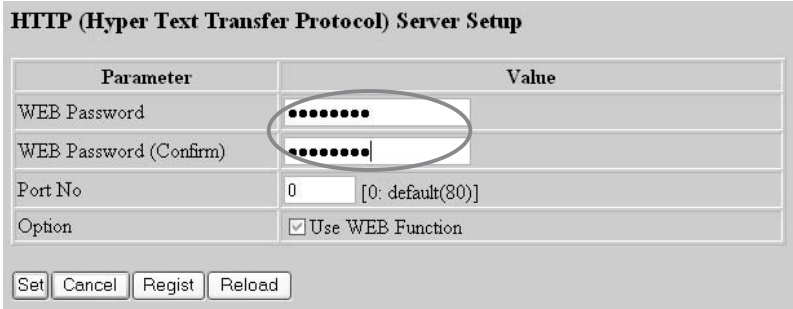

7. After entering the correct password, click the **Set** Button followed by the **Regist** Button.

The Set Button is used to transfer the entered values from the personal computer, and temporarily register them in the Ethernet Unit.

The Regist Button stores the set values that have been temporarily registered in the Ethernet to the flash memory (non-volatile memory) of the CPU Unit. The Ethernet Unit reads the unit settings from flash memory (non-volatile memory) when the power is turned ON or the Unit is restarted. Therefore, when making the unit settings using the Web function, always click the Set Button before the Regist Button. Otherwise the entered set values will not be used. The Set Button and Regist Button are provided on the window for each setting item.

Note To prevent unauthorized Web access, the Web function can be disabled. Select ***HTTP - Option*** and deselect the ***Use Web Function*** option. Click the **Set** Button followed by the **Regist** Button. This setting is enabled by turning ON the power to the Ethernet Unit again or restarting the Unit. This setting can be cancelled only through the CX-Programmer Unit Setup (version 5.0 or higher).

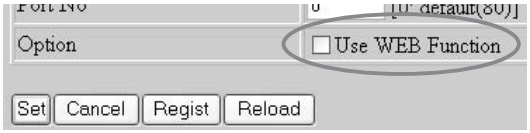

8. The functions of the other button are as follows:
   - Cancel Button
     Use this button to cancel the entered value and display the value that was previously set with the Set Button again. If the Set Button has not been clicked, the value that was read from the CPU Unit's flash memory (non-volatile memory) when the Ethernet Unit was started will be displayed.
   - Reload Button
     Use this button read and display the values saved in the CPU Unit's flash memory (non-volatile memory).
9. To enable the unit settings that have been registered in the CPU Unit's flash memory (non-volatile memory, turn the power to the PLC system OFF and ON again, or restart the Ethernet Unit.

Index

Numerics

100M indicator, 26

A

Account Name field, 68
applications precautions, xxiii
ARP communications, 16
ASCII characters, 241
Attached file name field, 71
Auto Adjust Time Tab, 52, 74
Auto allocated FINS node field, 65
automatic, 8
automatic clock adjustment, 8, 10, 22, 52
Auxiliary Area, 138

B

baud rate
  CJ-series, 14
  CS-series, 14
  setting, 49
Baud Rate field, 63
Bit value change field, 71
bits
  addresses, 90, 160
  error status, 83, 205
  service status, 82
  status of UDP/TCP sockets, 80
BROADCAST DATA SEND, 166
Broadcast field, 62
broadcast setting, 49
broadcast test
  command, 166
  reading results, 166
BROADCAST TEST RESULTS READ, 166
buffers, 196, 235
  configuration, 237

C

C200H-PRO27-E, 39
cables
  communications, xxv
  connections, 38
  installation, 37
  precautions, 35
  twisted-pair, 11
    CJ-series, 14
    CS-series, 14
cascade connections, 36
  CJ-series, 14
  CS-series, 14
ChangeMode command, 6, 73
CIO Area, 138
  allocations, 78
CJ1W-ETN11
  comparison, 27
  compatibility, 54
clock
  automatic adjustment, 8, 10, 22, 52
Close Request Switch, 85
Closing Flag, 80
CMND(490) instruction, 8, 17, 19, 141
commands
  FINS commands, 158
  remote, 6
    ChangeMode, 6
    ErrorLogClear, 6
    ErrorLogRead, 6
    FileDelete, 6
    FileList, 6
    FileRead, 6
    FileWrite, 6
    FinsSend, 6
    IOMRead, 6
    IOMWrite, 6
    MailLogClear, 6
    MailLogRead, 6
    PARAMBackup, 6
    Test, 6
    UMBackup, 6
Communication Unit Tab, 133
communications cables, xxv
Communications Port Enabled Flags, 90, 143
Communications Port Error Flags, 143
connectors
  recommended models, 35
Contact Output Units
  installation, 37
  interference with Ethernet, 37

precautions, 37
CONTROLLER DATA READ, 162
Controller Link, 10
CONTROLLER STATUS READ, 163
Conversion field, 63
Counter Area, 138
CPU Bus Unit Error Flag, 90
CPU Bus Unit Error, Unit Number Flags, 91
CPU Bus Unit Initializing Flags, 90
CPU Bus Unit Number Duplication Flags, 90
CPU Bus Unit Restart Bits, 91
CPU Bus Unit Setting Error Flag, 90
CPU Bus Unit Setting Error, Unit Number Flags, 91
CPU Bus Unit System Setup Area, 12
  format, 54
CPU Bus Units
  flags, 90
  Restart Bits, 91
CPU condition field, 71
CQM1-PRO01-E, 39
crimp terminals, xxiv
CS1W-CN114, 39
CS1W-CN224, 39
CS1W-CN624, 39
CS1W-ETN01
  compatibility, 54
CS1W-ETN11
  comparison, 27
  compatibility, 54
CS1W-KS001-E, 39
CSV extension, 73
current consumption
  CJ-series, 14
  CS-series, 14
Custom 1 to 3 field, 73
CX-Integrator, 12, 39
  creating routing tables, 125
CX-Programmer, 39
  connecting to PLC, 2, 128
    from personal computer, 3
    through multiple segments, 3
    using wireless LAN, 3
    within same segment, 2
  Ethernet Unit Setup, 41

D

data areas
  FINS communications, 160
Data Received Flag, 8, 80
dedicated control bits, 18
DHCP client, 9
dimensions, 15
  CJ-series, 14
  CS-series, 14
DM Area, 138
  allocations, 86
DNS client, 22
DNS client function, 10
DNS communications, 16
DNS server, 10, 22
DNS Tab, 51, 66
Driver Tab, 128

E

EC Directives, xxv
echo response packet, 52
electromagnetic fields, xxiii
EM Area, 138
EM File Memory, 7
E-mail
  attaching files, 9
  mail receive function, 6, 9, 21
  mail send function, 5, 20
  receiving at PLC, 6
  sending data, 5
  sending equipment status, 5
EMC Directives, xxv
EMI Standard, xxv
EMS Standard, xxv
ERC indicator, 26
  troubleshooting, 204
ERH indicator, 26
  troubleshooting, 204
ERROR LOG CLEAR, 168
ERROR LOG READ, 167
ErrorLogClear command, 6, 73
ErrorLogRead command, 6, 73
errors
  alignment, 165
  controller status, 163

error codes, 207
error log, 206
clearing, 168
reading, 167
error status, 205
flags
FINS communications, 164
response codes, 227
short packets, 165
status, 83, 205
unit numbers, 91
UNIX error messages, 231
Ethernet communications, 16
addresses
reading from Unit, 162
exchanging data between PLCs, 4
parameters, 235
Ethernet Connector, 23, 38
Ethernet Unit Setup, 41
Ethernet Units
mounting, 33
reading status, 196
replacing, 243
resetting, 161
ETN condition field, 71
ETN11 mode, 54
converting from ETN21 mode, 59
converting to ETN21 mode, 58
ETN21 mode
converting from ETN11 mode, 58
converting to ETN11 mode, 59

F

FileDelete, 6
FileDelete command, 73
FileList command, 6, 73
FileRead command, 6, 73
FileWrite command, 6, 73
FINS communications, 9, 16
commands, 158, 161
format, 159
from PLCs, 137
sending, 137
socket services, 159
data contents, 138
data length, 137
destination, 137
echo test, 53
memory areas, 160
node addresses, 9
overview, 17
port numbers, 138
response codes, 158, 227
response monitor time, 138
responses, 161
retries, 138
socket numbers, 159
specifications, 117, 137
TCP/IP, 3, 9
testing, 184
troubleshooting, 214
UDP/IP, 2, 9
FINS node addresses
automatic allocation, 9
FINS/TCP, 3, 117, 120
communications, 122
connection numbers, 121
connection status, 122
features, 120
frame format, 121
procedure, 123
TCP port number, 121
FINS/TCP Mode field, 65
FINS/TCP Port field, 62
FINS/TCP Tab, 64
FINS/UDP, 2, 50, 117, 118
frame format, 118
procedure, 119
UDP port numbers, 119
FINS/UDP Port field, 62
FinsGateway, 12, 132
FinsSend command, 6, 73
flags
Closing Flag, 80
Communications Port Enabled Flags, 90
Communications Port Error Flags, 90
CPU Bus Unit Error Flag, 90
CPU Bus Unit Error Unit Number Flags, 91
CPU Bus Unit Initializing Flags, 90
CPU Bus Unit Number Duplication Flags, 90
CPU Bus Unit Setting Error Flag, 90
CPU Bus Unit Setting Error Unit Number Flags, 91
Data Received Flag, 8, 80
Error Flags, 164
FTP Status Flag, 82
Opening Flag, 80
Receiving Flag, 80
Results Storage Error Flag, 80

Sending Flag, 80
TCP/UDP Open Flag, 80
FTP communications, 16
FTP indicator, 26
FTP server, 7, 9, 20, 51
troubleshooting, 221
FTP Status Flag, 82

H

Holding Area, 138
HOST indicator, 26
Host name field, 67, 68, 74
HTTP Tab, 75
hub, 11, 35
connections
cascade, 36
stack, 36
precautions, 36

I

I/O allocations, 138
CIO Area, 78
DM Area, 86
I/O tables
creating, 39
ICMP communications, 16
status, 193
indicators, 25
troubleshooting, 204
inspections, 245
installation
cables
connections, 38
Contact Output Units, 37
location, xxiii
precautions, 34
interlock circuits, xxiv
INTERNODE ECHO TEST, 165
internode test, 11
command, 165
Interval time field, 71, 72
IOM extension, 73
IOMRead command, 6, 73
IOMWrite command, 6, 73
IP Address field, 62, 65, 68, 74
IP Address Table field, 63
IP ADDRESS TABLE READ, 189
IP addresses
allocating, 94
configuration, 94
dynamic, 9
setting, 46
IP communications, 16
IP addresses
reading from Units, 162
reading tables, 189
IP router tables
reading, 191
status, 192
IP Router Table field, 63
IP ROUTER TABLE READ, 191
IP router tables, 49

K

keep-alive field, 65
keep-alive setting, 19, 49

L

limit circuits, xxiv
LNK indicator, 26
Local mail address field, 67
locking devices
precautions, xxiv
Login field, 63
Low Voltage Directive, xxvi

M

mail
status, 87
Mail Address 1 field, 69
Mail Address 2 field, 69
Mail address field, 71
Mail Address Tab, 51, 69
Mail password field, 68
mail receive function, 6, 9, 21
mail send function, 5, 20
Mail Send Switch, 5, 20
mail triggers, 5
MailLogClear command, 6, 73

MailLogRead command, 6, 73
main response code, 158
  See also MRES
maintenance, 243
media access method
  CJ-series, 14
  CS-series, 14
memory areas
  See also data areas
Memory Card, 7
MEMORY STATUS READ, 196
mode settings
  reading from Unit, 162
modulation method
  CJ-series, 14
  CS-series, 14
mounting
  Racks, 33
MRES, 159

N

Network Tab, 128, 133
networks
  network memory, 196, 238
No. field, 64
node addresses
  manipulating rotary switches, 58
  setting, 31, 32
Node Number Switches, 23
noise, xxiii
  Contact Output Units, 37

O

OBJ extension, 73
online editing, xxii
Opening Flag, 80
operating environment
  precautions, xxiii

P

PARAMBackup command, 6, 73
Password field, 63
PCMR(260) instruction, 144
PING, 11, 52, 184
  application examples, 53
  echo test, 52
POP server, 22
POP Tab, 51, 68
POP3 communications, 16
POP3 server, 6
Port No. field, 63, 66, 68, 74
port numbers
  UDP port
    reading from Unit, 162
power supply, xxiii
  precautions, xxiv
precautions, xxi
  applications, xxiii
  Contact Output Units, 37
  general, xxii
  inspections, 245
  installation, 33, 34
  operating environment, xxiii
  power supply, xxiv
  replacing Units, 243
  safety, xxii
  wiring, 38
Programming Console, 39
Programming Devices
  connecting, 39
  CX-Net, 39
  CX-Programmer, 39
  Programming Console, 39
Protect using mail address field, 72
PROTOCOL STATUS READ, 192
protocols, 16
  ARP, 16
  DNS, 16
  FINS, 16
  FTP, 16
  ICMP, 16
  IP, 16
  POP3, 16
  reading status, 192
  SMTP, 16
  SNTP, 16
  TCP, 16
  TCP/IP, 8
  UDP, 16
  UDP/IP, 8

R

Racks
  mounting Ethernet Units, 33
radioactivity, xxiii
RD indicator, 26
Receive file with specified extension only field, 73
Receive Mail Tab, 52, 72
Receive Request Switch, 85
Receiving Flag, 80
RECV(098) instruction, 17, 140
relay tables, 124
RESET, 161
response codes, 227
  FINS commands, 158
  UNIX error messages, 231
Results Storage Area, 159
  response codes, 231
Results Storage Error Flag, 80
Retry timer field, 66
Routing Table Area, 12
routing tables
  creating, 124
  local network table, 124
  relay network table, 124
  setting examples, 126
RUN indicator, 26
  troubleshooting, 204

S

safety precautions, xxii
SD indicator, 26
Send Error Log information field, 71
Send file data/I/O memory data field, 71
Send Mail Tab, 51, 70
Send Request Switch, 85
Send status information field, 71
Send user data field, 71
SEND(090) instruction, 17, 139
  transmission delay, 149
Sending Flag, 80
servers
  specifying, 22
service status, 82
Setup Tab, 51, 62
short-circuits
  precautions, xxiv
signals
  precautions, xxiv
SMTP communications, 16
SMTP server, 5, 22
SMTP Tab, 51, 67
SNTP communications, 16
SNTP server, 10, 22
socket option, 159
Socket Service Request Switches, 84
socket services, 18, 51
  creating communications applications, 7
  FINS communications, 159
  Parameter Areas, 88, 231
  socket option, 159
  Socket Service Request Switches, 84
  TCP/IP, 8
  troubleshooting, 231
  UDP/IP, 8
SOCKET STATUS READ, 198, 239
sockets
  closing
    TCP, 183
    UDP, 173
  numbers, 159
  opening
    TCP, 174, 177
    UDP, 169
  reading status, 198
  receiving data
    TCP, 180
    UDP, 170
  sending data
    TCP, 181
    UDP, 172
  status, 80
  TCP sockets
    status, 88, 239
    troubleshooting, 218
  testing communications, 184
  UDP sockets
    troubleshooting, 215
software
  configuration, 16
Software switch field, 71
specifications
  Ethernet Units
    CJ-series, 14
    CS-series, 14
  FINS communications, 137

SRES, 159
stack connections, 36
startup
  procedure, 30
static electricity, xxiii
  precautions, xxv
status
  reading memory status, 196
  reading protocol status, 192
  reading socket status, 198
STD extension, 73
Sub-net Mask field, 62
subnet masks, 48, 95
  reading from Unit, 162
sub-response code, 158
  See also SRES
switches
  Socket Service Request Switches, 84
SYSMAC BUS/2, 138
SYSMAC LINK, 138
system configuration, 11
  examples, 128

T

TCP Active Open Request Switch, 85
TCP CLOSE REQUEST, 183
TCP communications, 16
  sockets
    interface, 19
    status, 239
    troubleshooting, 218
  status, 194
TCP indicator, 26
TCP Nodes Tab, 135
TCP OPEN REQUEST (ACTIVE), 177
TCP OPEN REQUEST (PASSIVE), 174
TCP Passive Open Request Switch, 85
TCP RECEIVE REQUEST, 180
TCP SEND REQUEST, 181
TCP/IP, 3, 8, 117
  creating communications applications, 7
TCP/IP keep-alive, 49
TCP/UDP Open Flag, 80
terminal blocks, xxiii
Test command, 6, 73
Timer Area, 138
timers, 235
transmission
  delays, 149
  distance
    CJ-series, 14
    CS-series, 14
  media
    CJ-series, 14
    CS-series, 14
  path
    CJ-series, 14
    CS-series, 14
troubleshooting
  FINS communications, 214
  FTP server, 221
  procedures, 213
  socket services, 231
  startup, 213
  TCP sockets, 218
  UDP sockets, 215
  UNIX error messages, 231
  using indicators, 204
  using response codes, 227
twisted-pair cables, 11
  precautions, 35
  recommended models, 35
TXT extension, 73

U

UDP CLOSE REQUEST, 173
UDP communications, 16
  sockets
    troubleshooting, 215
UDP Nodes Tab, 134
UDP OPEN REQUEST, 169
UDP Open Request Switch, 85
UDP RECEIVE REQUEST, 170
UDP SEND REQUEST, 172
UDP/IP, 2, 8, 117
  creating communications applications, 7
UDP/TCP sockets
  status bits, 80
UMBackup command, 6, 73
Unit Number Switch, 23
unit numbers
  setting, 31, 32
UNIX error messages, 231
Use IP address to protect field, 64

Use POP before SMTP field, 67

V

Visual BASIC, 12
Visual C++, 12

W

weight
  CJ-series, 14
  CS-series, 14
wiring
  cables, 38
  precautions, 38
word addresses, 90, 160
Word value change field, 71
Work Area, 138

Revision History

A manual revision code appears as a suffix to the catalog number on the front cover of the manual.

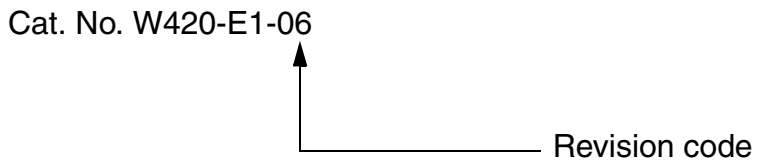

The following table outlines the changes made to the manual during each revision. Page numbers refer to the previous version.

Revision code	Date	Revised content
1	July 2003	Original production
02	March 2004	Information was added for new functions available with new versions of the CX-Programmer and Ethernet Unit, including the Web function, described in new sub-section *2-8* and *Appendix G.* The following revisions were also made. **Page xiv:** Added information on unit versions. **Page 3:** Added information for CX-Programmer version 4.0 or higher. **Page 7:** Corrected “or” to “and” in paragraph on automatic clock adjustment. **Pages 8 and 9:** Added information on Ethernet Units with Unit Ver. 1.3 or later. **Page 12:** Added information on CX-Programmer version 4.0 or higher. **Page 17:** Changed note **Page 25:** Corrected information for ERH indicator. **Page 26:** Added information on upgrade to unit version. **Page 28:** Corrected “00.00.00.00” to “0.0.0.0” in Note 1. **Page 31:** Corrected “1.2” to “0.9” and “0.8” to “0.4” in Note. **Page 40:** Changed screen. **Page 41:** Changed screen, corrected “Right-click” to “Click” in steps 6 and 7, and added new sub-section on the Web function. **Page 43:** Changed screen. **Page 45:** Added settings to tables. **Page 47:** Added table of settings for HTTP Tab, and swapped “response” and “request” in diagram. **Pages 50 and 58:** Changed screen. **Page 59:** Added item to table and notes. **Page 60:** Corrected “00.00.00.00” to “0.0.0.0” in table. **Page 71:** Added information on HTTP Server Setup and changed screen. **Page 84:** Changed “07CD hex” to “07C0 hex” **Page 85:** Corrected “00.00.00.00” to “0.0.0.0” and corrected information for setting local IP address. **Page 96:** Added information on prohibiting dynamic conversion of remote IP addresses. **Pages 100 and 101:** Corrected table headings. **Page 124:** Added note. **Page 125:** Corrected “Controller Unit” to “Controller Link Unit” in diagram. **Page 126:** Corrected “Ethernet Unit” to “Controller Link Unit” in information on relay network tables, and corrected “2” to “1” for the relay node address. **Pages 141 and 142:** Changed “PC” to “PLC.” **Page 197:** Removed “(CJ Series only)” from table. **Page 221:** Added error codes to table. **Page 229:** Added table on TCP status information.
03	June 2005	Information was added for new versions of the Ethernet Unit and minor corrections were also made, including the following changes. **Page v:** Added information on general precautions notation. **Page vii:** Removed table. **Page xiii:** Added information on warranty and liability. **Page 28:** Added table. **Page 36:** Changed cable in diagram. **Pages 45 and 247:** Replaced diagram. **Pages 85 and 120:** Changed n+24 to n+23. **Page 101:** Added information on ETN11-compatible mode. **Page 123:** Added note. **Page 243:** Changed and added new parameter item.

Revision code	Date	Revised content
04	January 2006	The following changes were made throughout the manual: added CJ1G-CPU□□P, changed "CX-Net" to "CX-Integrator", and changed "CX-Programmer" to "CX-One". **Page xv:** Removed manuals and added others and changed details for manuals W446 and W336. **Pages xxiv and xxv:** Added precautions. **Page 30:** Changed the reference for creating I/O tables. **Page 40:** Removed model number for the CX-Programmer and added information on relevant manuals. **Page 41:** Added information on unit version restrictions. **Pages 74 and 75:** Changed "SMTP" to "SNTP". **Page 100:** Removed "to be included in". **Pages 103 and 121:** Changed the reference for FINS node address settings. **Page 166:** Changed the reference for error code details. **Page 188:** Changed the reference page for IP network addresses. **Page 205 and 206:** Changed the reference for FINS settings.
05	June 2008	**Page xv:** Change model and name for W446. **Page 4:** Added server graphic and callouts to figure. **Page 6:** Removed "(5)" from figure. **Pages 13 and 14:** Changed specifications for number of cascade connections. **Page 35:** Removed RH509E. **Page 66:** Changed "ms" to "s" at bottom left of table. **Page 84:** Changed "ON" to "OFF for bit 13 description.
06	April 2009	Added information for unit version 1.5. Made corrections and revised expressions and notation.

OMRON Corporation
Industrial Automation Company
Control Devices Division H.Q.
Automation & Drive Division
Automation Department 1
Shiokoji Horikawa, Shimogyo-ku,
Kyoto, 600-8530 Japan
Tel: (81) 75-344-7084/Fax: (81) 75-344-7149

Regional Headquarters
OMRON EUROPE B.V.
Wegalaan 67-69-2132 JD Hoofddorp
The Netherlands
Tel: (31)2356-81-300/Fax: (31)2356-81-388

OMRON ELECTRONICS LLC
One Commerce Drive Schaumburg,
IL 60173-5302 U.S.A.
Tel: (1) 847-843-7900/Fax: (1) 847-843-7787

OMRON ASIA PACIFIC PTE. LTD.
No. 438A Alexandra Road # 05-05/08 (Lobby 2),
Alexandra Technopark, Singapore 119967
Tel: (65) 6835-3011/Fax: (65) 6835-2711

OMRON (CHINA) CO., LTD.
Room 2211, Bank of China Tower,
200 Yin Cheng Zhong Road,
PuDong New Area, Shanghai, 200120, China
Tel: (86) 21-5037-2222/Fax: (86) 21-5037-2200

OMRON Industrial Automation Global: **www.ia.omron.com**

Authorized Distributor:

© OMRON Corporation 2003 All Rights Reserved.
In the interest of product improvement,
specifications are subject to change without notice.

Printed in Japan
Cat. No. W420-E1-06 0409