Cat. No. W241-E1-03

生産終了
DISCONTINUED

SYSMAC
C200H-PID0□
PID Control Unit

OPERATION MANUAL

OMRON

C200H-PID0□
PID Control Unit

Operation Manual

Revised August 2003

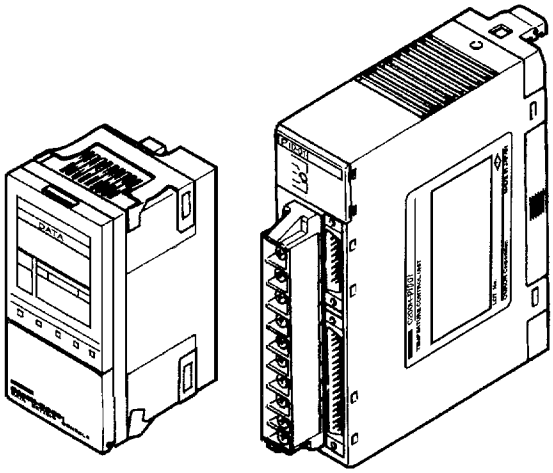

Read and Understand this Manual

Please read and understand this manual before using the product. Please consult your OMRON representative if you have any questions or comments.

Warranty and Limitations of Liability

WARRANTY

OMRON's exclusive warranty is that the products are free from defects in materials and workmanship for a period of one year (or other period if specified) from date of sale by OMRON.

OMRON MAKES NO WARRANTY OR REPRESENTATION, EXPRESS OR IMPLIED, REGARDING NON-INFRINGEMENT, MERCHANTABILITY, OR FITNESS FOR PARTICULAR PURPOSE OF THE PRODUCTS. ANY BUYER OR USER ACKNOWLEDGES THAT THE BUYER OR USER ALONE HAS DETERMINED THAT THE PRODUCTS WILL SUITABLY MEET THE REQUIREMENTS OF THEIR INTENDED USE. OMRON DISCLAIMS ALL OTHER WARRANTIES, EXPRESS OR IMPLIED.

LIMITATIONS OF LIABILITY

OMRON SHALL NOT BE RESPONSIBLE FOR SPECIAL, INDIRECT, OR CONSEQUENTIAL DAMAGES, LOSS OF PROFITS OR COMMERCIAL LOSS IN ANY WAY CONNECTED WITH THE PRODUCTS, WHETHER SUCH CLAIM IS BASED ON CONTRACT, WARRANTY, NEGLIGENCE, OR STRICT LIABILITY.

In no event shall the responsibility of OMRON for any act exceed the individual price of the product on which liability is asserted.

IN NO EVENT SHALL OMRON BE RESPONSIBLE FOR WARRANTY, REPAIR, OR OTHER CLAIMS REGARDING THE PRODUCTS UNLESS OMRON'S ANALYSIS CONFIRMS THAT THE PRODUCTS WERE PROPERLY HANDLED, STORED, INSTALLED, AND MAINTAINED AND NOT SUBJECT TO CONTAMINATION, ABUSE, MISUSE, OR INAPPROPRIATE MODIFICATION OR REPAIR.

Application Considerations

SUITABILITY FOR USE

OMRON shall not be responsible for conformity with any standards, codes, or regulations that apply to the combination of products in the customer's application or use of the products.

At the customer's request, OMRON will provide applicable third party certification documents identifying ratings and limitations of use that apply to the products. This information by itself is not sufficient for a complete determination of the suitability of the products in combination with the end product, machine, system, or other application or use.

The following are some examples of applications for which particular attention must be given. This is not intended to be an exhaustive list of all possible uses of the products, nor is it intended to imply that the uses listed may be suitable for the products:

- Outdoor use, uses involving potential chemical contamination or electrical interference, or conditions or uses not described in this manual.
- Nuclear energy control systems, combustion systems, railroad systems, aviation systems, medical equipment, amusement machines, vehicles, safety equipment, and installations subject to separate industry or government regulations.
- Systems, machines, and equipment that could present a risk to life or property.

Please know and observe all prohibitions of use applicable to the products.

NEVER USE THE PRODUCTS FOR AN APPLICATION INVOLVING SERIOUS RISK TO LIFE OR PROPERTY WITHOUT ENSURING THAT THE SYSTEM AS A WHOLE HAS BEEN DESIGNED TO ADDRESS THE RISKS, AND THAT THE OMRON PRODUCTS ARE PROPERLY RATED AND INSTALLED FOR THE INTENDED USE WITHIN THE OVERALL EQUIPMENT OR SYSTEM.

PROGRAMMABLE PRODUCTS

OMRON shall not be responsible for the user's programming of a programmable product, or any consequence thereof.

Disclaimers

CHANGE IN SPECIFICATIONS

Product specifications and accessories may be changed at any time based on improvements and other reasons.

It is our practice to change model numbers when published ratings or features are changed, or when significant construction changes are made. However, some specifications of the products may be changed without any notice. When in doubt, special model numbers may be assigned to fix or establish key specifications for your application on your request. Please consult with your OMRON representative at any time to confirm actual specifications of purchased products.

DIMENSIONS AND WEIGHTS

Dimensions and weights are nominal and are not to be used for manufacturing purposes, even when tolerances are shown.

PERFORMANCE DATA

Performance data given in this manual is provided as a guide for the user in determining suitability and does not constitute a warranty. It may represent the result of OMRON's test conditions, and the users must correlate it to actual application requirements. Actual performance is subject to the OMRON Warranty and Limitations of Liability.

ERRORS AND OMISSIONS

The information in this manual has been carefully checked and is believed to be accurate; however, no responsibility is assumed for clerical, typographical, or proofreading errors, or omissions.

6489

Notice of Changes to Information on Conformance to EC Directives

OMRON

Applicable Manual
W225-E1-05
W240-E1-01
W241-E1-03

OMRON Corporation

Thank you for supporting OMRON products.
The EC Directive EN 61131-2 was modified as of May 1, 2006. As a result of the modification, the EC Directive information provided in the manual is not completely accurate. Please use the information provided below.

Conformance to EC Directives

Applicable Directives

- EMC Directives
- Low Voltage Directive

Concepts

■ EMC Directives

OMRON supplies electric devices that are used built into other devices or manufacturing equipment. These OMRON products are designed to conform to the related EMC standards (see note) so that the devices or equipment in which they are used can more easily conform to EMC standards.
EMC-related performance of the OMRON devices that conform to EC Directives will vary depending on the configuration, wiring, and other conditions of the equipment or control panel on which the OMRON devices are installed. The customer must, therefore, perform the final check to confirm that devices and the overall machine conform to EMC standards.

Note: Applicable EMC (Electromagnetic Compatibility) standards are as follows: EN 61131-2

■ Low Voltage Directive

Always ensure that devices operating at voltages of 50 to 1,000 V AC and 75 to 1,500 V DC meet the required safety standards for the PLC (EN 61131-2).

Conformance to EC Directives

C200H-series products conform to EC Directives. However, the following precautions must be observed to ensure that the machine or device in which the C200H PLC is used conforms to EC Directives:

1. The C200H PLC must be installed within a control panel.
2. You must use reinforced insulation or double insulation for the DC power supplies connected to the power supply terminals on PLCs that take DC power and for the DC power supplies connected to I/O Units. The DC power supply connected to the power supply terminals on PLCs using DC power must have an output hold time of at least 10 ms.
3. C200H-series products conforming to EC Directives also conform to EN 61131-2 for EMI. Radiated emission characteristics (10-m regulations) may vary depending on the configuration of the control panel used, other devices connected to the control panel, wiring, and other conditions. You must therefore confirm that the overall machine or equipment conforms to EC Directives even when using C200H-series products that conform to EC Directives.

Notice:

OMRON products are manufactured for use according to proper procedures by a qualified operator and only for the purposes described in this manual.

The following conventions are used to indicate and classify precautions in this manual. Always heed the information provided with them. Failure to heed precautions can result in injury to people or damage to property.

⚠ DANGER Indicates an imminently hazardous situation which, if not avoided, will result in death or serious injury.

⚠ WARNING Indicates a potentially hazardous situation which, if not avoided, could result in death or serious injury.

⚠ Caution Indicates a potentially hazardous situation which, if not avoided, may result in minor or moderate injury, or property damage.

OMRON Product References

All OMRON products are capitalized in this manual. The word “Unit” is also capitalized when it refers to an OMRON product, regardless of whether or not it appears in the proper name of the product.

The abbreviation “Ch,” which appears in some displays and on some OMRON products, often means “word” and is abbreviated “Wd” in documentation in this sense.

The abbreviation “PC” means Programmable Controller and is not used as an abbreviation for anything else.

Visual Aids

The following headings appear in the left column of the manual to help you locate different types of information.

Note Indicates information of particular interest for efficient and convenient operation of the product.

1,2,3... 1. Indicates lists of one sort or another, such as procedures, checklists, etc.

© OMRON, 1993

All rights reserved. No part of this publication may be reproduced, stored in a retrieval system, or transmitted, in any form, or by any means, mechanical, electronic, photocopying, recording, or otherwise, without the prior written permission of OMRON.

No patent liability is assumed with respect to the use of the information contained herein. Moreover, because OMRON is constantly striving to improve its high-quality products, the information contained in this manual is subject to change without notice. Every precaution has been taken in the preparation of this manual. Nevertheless, OMRON assumes no responsibility for errors or omissions. Neither is any liability assumed for damages resulting from the use of the information contained in this publication.

TABLE OF CONTENTS

PRECAUTIONS xi

1 Intended Audience xii
2 General Precautions xii
3 Safety Precautions xii
4 Operating Environment Precautions xiii
5 Application Precautions xiii

SECTION 1
System Configuration and Features 1

1-1 Features 2
1-2 Basic System Configuration 3

SECTION 2
Connections and Settings 7

2-1 Nomenclature 8
2-2 Switch Settings 8
2-3 Wiring 12

SECTION 3
Data Setting Console Operation 19

3-1 Operating Procedure 20
3-2 Data Flow 21
3-3 Nomenclature and Features 22
3-4 Parameter Displays and Settings 24

SECTION 4
PC Memory Allocation and Programming. 33

4-1 Memory Allocation 34
4-2 Data Flow 42
4-3 Programming 42

SECTION 5
Troubleshooting 51

Error Detection 52

Appendices

A Specifications 55
B Dimensions 57
C Parameters and Key Operations 59

Index. 61

Revision History 63

TABLE OF CONTENTS

About this Manual:

This manual describes the installation and operation of the C200H-PID0□ PID Control Unit and includes the sections described below. Also briefly described is the basic operation and installation of the C200H-DSC01 Data Setting Console.

Please read this manual carefully and be sure you understand the information provided before attempting to install and operate the C200H-PID0□ PID Control Unit and Data Setting Console.

Section 1 provides PID Control Unit features and describes its basic system configuration.

Section 2 provides information on the connections and settings of the PID Control Unit.

Section 3 provides the basic operating procedures of the Data Setting Console including parameter settings and displays.

Section 4 provides the C200H PC's memory allocation for the PID Control Unit. Basic programming procedures and examples are also provided.

Section 5 describes possible errors and provides measures for dealing with them.

The three **Appendices** provide references dealing with specifications, dimensions, and key operations.

⚠ **WARNING** Failure to read and understand the information provided in this manual may result in personal injury or death, damage to the product, or product failure. Please read each section in its entirety and be sure you understand the information provided in the section and related sections before attempting any of the procedures or operations given.

PRECAUTIONS

This section provides general precautions for using the C200H-PID0□ PID Control Unit and related devices.

The information contained in this section is important for the safe and reliable application of the C200H-PID0□ PID Control Unit. You must read this section and understand the information contained before attempting to set up or operate the C200H-PID0□ PID Control Unit.

1 Intended Audience xii
2 General Precautions xii
3 Safety Precautions xii
4 Operating Environment Precautions. xiii
5 Application Precautions xiii

1 Intended Audience

This manual is intended for the following personnel, who must also have knowledge of electrical systems (an electrical engineer or the equivalent).

- Personnel in charge of installing FA systems.
- Personnel in charge of designing FA systems.
- Personnel in charge of managing FA systems and facilities.

2 General Precautions

The user must operate the product according to the performance specifications described in the relevant manuals.

Before using the product under conditions which are not described in the manual or applying the product to nuclear control systems, railroad systems, aviation systems, vehicles, combustion systems, medical equipment, amusement machines, safety equipment, and other systems, machines, and equipment that may have a serious influence on lives and property if used improperly, consult your OMRON representative.

Make sure that the ratings and performance characteristics of the product are sufficient for the systems, machines, and equipment, and be sure to provide the systems, machines, and equipment with double safety mechanisms.

This manual provides information for programming and operating the Unit. Be sure to read this manual before attempting to use the Unit and keep this manual close at hand for reference during operation.

⚠ WARNING It is extremely important that a PC and all PC Units be used for the specified purpose and under the specified conditions, especially in applications that can directly or indirectly affect human life. You must consult with your OMRON representative before applying a PC system to the above-mentioned applications.

3 Safety Precautions

⚠ WARNING Do not attempt to take any Unit apart while the power is being supplied. Doing so may result in electric shock.

⚠ WARNING Do not touch any of the terminals or terminal blocks while the power is being supplied. Doing so may result in electric shock.

⚠ WARNING Do not attempt to disassemble, repair, or modify any Units. Any attempt to do so may result in malfunction, fire, or electric shock.

⚠ WARNING Provide safety measures in external circuits (i.e., not in the Programmable Controller), including the following items, in order to ensure safety in the system if an abnormality occurs due to malfunction of the PC or another external factor affecting the PC operation. Not doing so may result in serious accidents.

- Emergency stop circuits, interlock circuits, limit circuits, and similar safety measures must be provided in external control circuits.
- The PC will turn OFF all outputs when its self-diagnosis function detects any error or when a severe failure alarm (FALS) instruction is executed.

As a countermeasure for such errors, external safety measures must be provided to ensure safety in the system.

- The PC outputs may remain ON or OFF due to deposition or burning of the output relays or destruction of the output transistors. As a countermeasure for such problems, external safety measures must be provided to ensure safety in the system.
- When the 24-VDC output (service power supply to the PC) is overloaded or short-circuited, the voltage may drop and result in the outputs being turned OFF. As a countermeasure for such problems, external safety measures must be provided to ensure safety in the system.

⚠ **WARNING** Fail-safe measures must be taken by the customer to ensure safety in the event of incorrect, missing, or abnormal signals caused by broken signal lines, momentary power interruptions, or other causes.

4 Operating Environment Precautions

⚠ **Caution** Do not operate the control system in the following locations:

- Locations subject to direct sunlight.
- Locations subject to temperatures or humidity outside the range specified in the specifications.
- Locations subject to condensation as the result of severe changes in temperature.
- Locations subject to corrosive or flammable gases.
- Locations subject to dust (especially iron dust) or salts.
- Locations subject to exposure to water, oil, or chemicals.
- Locations subject to shock or vibration.

⚠ **Caution** Take appropriate and sufficient countermeasures when installing systems in the following locations:

- Locations subject to static electricity or other forms of noise.
- Locations subject to strong electromagnetic fields.
- Locations subject to possible exposure to radioactivity.
- Locations close to power supplies.

⚠ **Caution** The operating environment of the PC system can have a large effect on the longevity and reliability of the system. Improper operating environments can lead to malfunction, failure, and other unforeseeable problems with the PC system. Be sure that the operating environment is within the specified conditions at installation and remains within the specified conditions during the life of the system.

5 Application Precautions

Observe the following precautions when using the PC system.

⚠ **WARNING** Always heed these precautions. Failure to abide by the following precautions could lead to serious or possibly fatal injury.

- Always ground the system to 100 Ω or less when installing the Units. Not connecting to a ground of 100 Ω or less may result in electric shock.
- Always turn OFF the power supply to the PC before attempting any of the following. Not turning OFF the power supply may result in malfunction or electric shock.
  - Mounting or dismounting Power Supply Units, I/O Units, CPU Units, Memory Units, or any other Units.
  - Assembling the Units.
  - Setting DIP switches or rotary switches.
  - Connecting cables or wiring the system.
  - Connecting or disconnecting the connectors.

⚠ **Caution** Failure to abide by the following precautions could lead to faulty operation of the PC or the system, or could damage the PC or PC Units. Always heed these precautions.

- Fail-safe measures must be taken by the customer to ensure safety in the event of incorrect, missing, or abnormal signals caused by broken signal lines, momentary power interruptions, or other causes.
- Always use the power supply voltages specified in this manual. An incorrect voltage may result in malfunction or burning.
- Take appropriate measures to ensure that the specified power with the rated voltage and frequency is supplied. Be particularly careful in places where the power supply is unstable. An incorrect power supply may result in malfunction.
- Install external breakers and take other safety measures against short-circuiting in external wiring. Insufficient safety measures against short-circuiting may result in burning.
- Do not apply voltages to the Input Units in excess of the rated input voltage. Excess voltages may result in burning.
- Do not apply voltages or connect loads to the Output Units in excess of the maximum switching capacity. Excess voltage or loads may result in burning.
- Disconnect the functional ground terminal when performing withstand voltage tests. Not disconnecting the functional ground terminal may result in burning.
- Be sure that all the mounting screws, terminal screws, and cable connector screws are tightened to the torque specified in this manual. Incorrect tightening torque may result in malfunction.
- Leave the label attached to the Unit when wiring. Removing the label may result in malfunction if foreign matter enters the Unit.
- Remove the label after the completion of wiring to ensure proper heat dissipation. Leaving the label attached may result in malfunction.
- Double-check all wiring and switch settings before turning ON the power supply. Incorrect wiring may result in burning.
- Wire correctly. Incorrect wiring may result in burning.
- Mount Units only after checking terminal blocks and connectors completely.
- Be sure that the terminal blocks, Memory Units, expansion cables, and other items with locking devices are properly locked into place. Improper locking may result in malfunction.

- Check the user program for proper execution before actually running it on the Unit. Not checking the program may result in an unexpected operation.
- Confirm that no adverse effect will occur in the system before attempting any of the following. Not doing so may result in an unexpected operation.
  - Changing the operating mode of the PC.
  - Force-setting/force-resetting any bit in memory.
  - Changing the present value of any word or any set value in memory.
- Resume operation only after transferring to the new CPU Unit the contents of the DM Area, HR Area, and other data required for resuming operation. Not doing so may result in an unexpected operation.
- Do not pull on the cables or bend the cables beyond their natural limit. Doing either of these may break the cables.
- Do not place objects on top of the cables or other wiring lines. Doing so may break the cables.
- Use crimp terminals for wiring. Do not connect bare stranded wires directly to terminals. Connection of bare stranded wires may result in burning.
- When replacing parts, be sure to confirm that the rating of a new part is correct. Not doing so may result in malfunction or burning.
- Before touching a Unit, be sure to first touch a grounded metallic object in order to discharge any static built-up. Not doing so may result in malfunction or damage.

⚠ **Caution** The cycle time of the CPU Unit must be a minimum of 20 ms. If the cycle time is too short, the PID Control Unit will not operate properly.

- For C200H, C200HS, C200HX(-ZE), C200HG(-ZE), C200HE(-ZE) PCs, if the program processing time is short, it is recommended that the fixed cycle time instruction (SCAN18) be used.
- For CS-series PCs, set the minimum cycle time in the Programming Console address +208, bits 00 to 15 of the PC Setup.
- When IORF(97) is executed for the PID Control Unit, there must be an interval of at least 20 ms between prior and subsequent end refreshes.

⚠ **Caution** The PID Control Unit's built-in EEPROM can be written to 100,000 times (service life). If more than 100,000 EEPROM write operations are performed, the memory will become corrupted. Do not use a Unit that has processed more than 100,000 EEPROM write operations.

SECTION 1
System Configuration and Features

This section provides PID Control Unit features and the basic system configuration.

1-1 Features 2
1-2 Basic System Configuration 3

1-1 Features

The PID Control Unit scales inputs from connected sensors and then carries out PID control according to preset parameters.

Advanced PID Control

Stable PID control is achieved using advanced PID control and an auto-tuning feature. ON/OFF control can also be selected.

Two PID Control Loops with a Single Unit

Two PID control loops are possible with one Unit.

High-speed Sampling Period of 100 ms

A sampling period of 100 ms is achieved with two loops, enabling high-speed PID control.

Input Noise Reduction with Digital Filter

Mitigation of sudden input fluctuations makes the PID Control Unit effective in quick-response systems.

Comprehensive Output Specifications

Three types of output specification versions are available: C200H-PID01 for transistor output, C200H-PID02 for voltage output, and C200H-PID03 for current output.

Eight Banks of Data Settings

Eight data values such as set point (SP) and alarm set values can be preset in eight data banks for easy selection.

Data Input and Display

The C200H-DSC01 Data Setting Console (sold separately) is used to input data and display present values (PV) and set values (SV). The easy-to-read display can be panel-mounted.

User Programs Allows Reading and Writing of Data

Data can be set and retrieved by means of C200H user programs.

1-2 Basic System Configuration

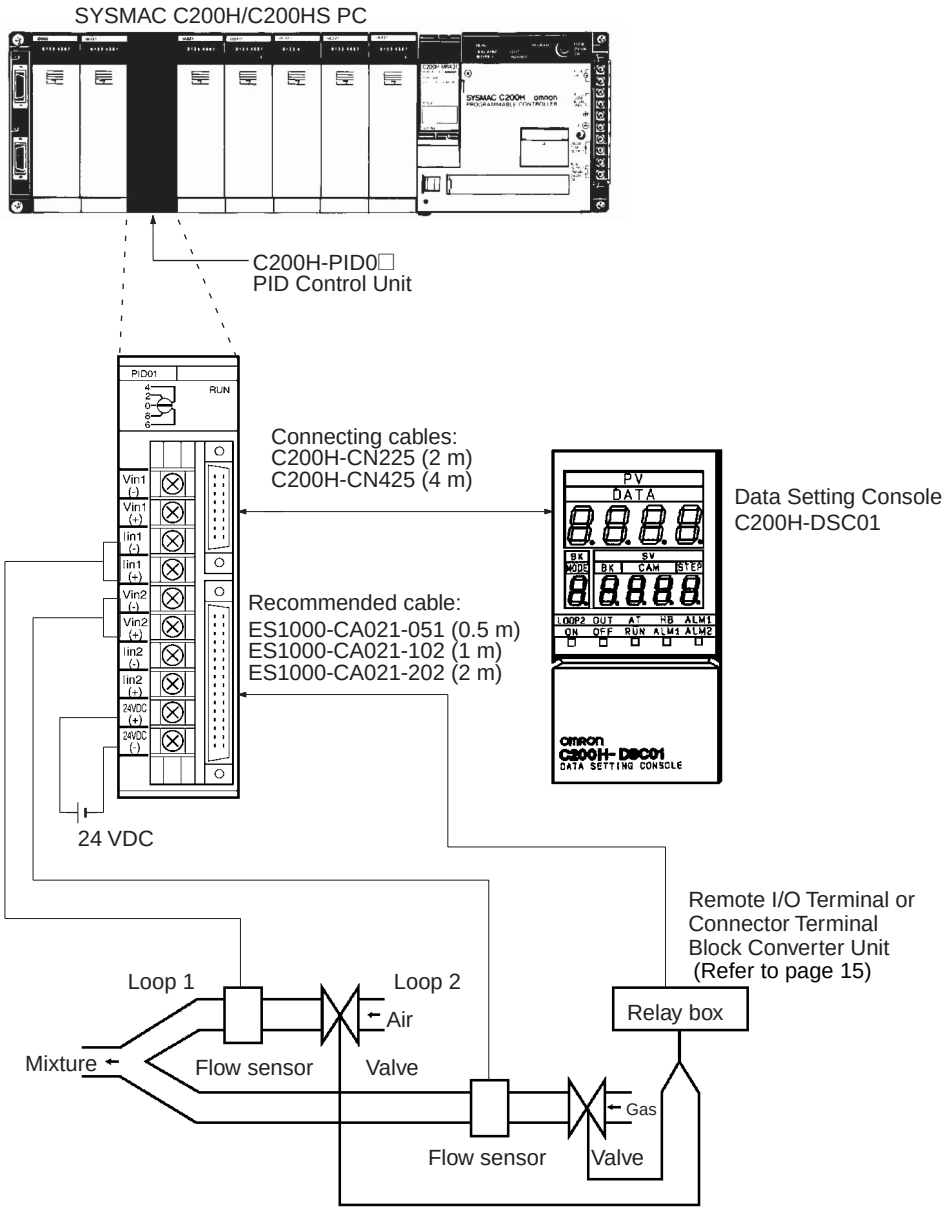

PID Control Unit Models

Output type	Transistor output	Voltage output	Current output
Model	C200H-PID01	C200H-PID02	C200H-PID03

Number of Units

The PID Control Unit belongs to the C200H Special I/O Unit group. A maximum of ten Special I/O Units (including PC Link Units) can be mounted on the CPU Rack, Expansion I/O Rack, and Slave Rack.

Note Configure the Units such that the maximum current supplied for each Rack is greater than or equal to the total current consumption for the Units.
Refer to the *C200H PC Operation Manuals* for details on configuring systems.

Number of Units Mountable on Slave Rack

The number of Special I/O Units used with a Slave Rack is limited by data transmission considerations, as shown in the table below. The numbers in the table indicate the maximum number of Units of groups A, B, C, or D which can be used with a single Slave Rack.

A	B	C	D
High-speed Counter Units Position Control Units (NC111/112) ASCII Unit Analog I/O Units ID Sensor Units Fuzzy Logic Unit	High-density and Mixed I/O Units Temperature Control Units Heat/Cool Temperature Control Units PID Control Units Cam Positioner Unit	Temperature Sensor Units Voice Unit	Position Control Unit (NC211)
4 units max.	8 units max.	6 units max.	2 units max.

Note

1. When a combination of Units from groups A, B, C, and D is used, the number from each group must satisfy both the following equations:

   $3A + B + 2C + 6D \leq 12$
   $A + B + C + D \leq 8$

2. Other Units can be added until the total number of units reaches ten. If PC Link Units are used, the number of Units including the PC Link Units must not exceed ten.

Precautions

The IR area of the C200H Special I/O Unit is allocated according to the setting of the unit number switch on the front panel, *not* the address of the slot where the unit is mounted. Refer to *4-1 Memory Allocation* for the allocation of the memory area.

With the C200 H, leave the two slots next to the CPU free. It is not possible to use devices connected to the CPU (such as the Programming Console) if these slots are occupied.

If the C200H Slave Rack is connected to another SYSMAC model Remote I/O Master Unit, such as the C120, C500, C1000H, or C2000H, it is not possible to use a Special I/O Unit with the C200H Slave Rack.

⚠ WARNING Always turn the C200H power off before connecting or disconnecting a Unit, terminal block, or output connector.

⚠ Caution Connect thermocouples with the appropriate compensating conductor.
Wire I/O leads in separate ducts from power leads to prevent noise problems.

Additional Function

The function described below has been added to products with the following lot number and later ones.

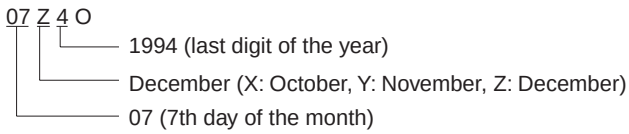

Description of Function

RAM Write Commands

- Previous commands allowed reading and writing to the EEPROM only. These new commands allow writing to the RAM.

⚠ **Caution** The PID Control Unit's built-in EEPROM can be written to 100,000 times (service life). If more than 100,000 EEPROM write operations are performed, the memory will become corrupted. Do not use a Unit that has processed more than 100,000 EEPROM write operations.

- When various settings require frequent rewriting, write to the RAM and, after confirming the setting values, save the data by writing it to the EEPROM. The data written to the RAM is deleted when the power is turned off.
- List of RAM Write Commands

Parameter	Command		Write	Read
Set point	4	0	Yes	No
Execution bank number	4	2	Yes	No
Alarm SV 1	4	3	Yes	No
Alarm SV 2	4	4	Yes	No
Input shift value	4	5	Yes	No
Proportional band	4	6	Yes	No
Integral (reset) time	4	7	Yes	No
Derivative (rate) time	4	8	Yes	No
Decimal point position	5	2	Yes	No
Scaling lower limit	5	3	Yes	No
Scaling upper limit	5	4	Yes	No
Control period	5	7	Yes	No
Hysteresis	5	8	Yes	No
Alarm hysteresis	5	9	Yes	No
Digital filter	5	E	Yes	No
Alarm 1 mode	6	4	Yes	No
Alarm 2 mode	6	5	Yes	No

SECTION 2
Connections and Settings

This section provides information on the connections and settings of the PID Control Unit.

2-1 Nomenclature 8
2-2 Switch Settings 8
2-3 Wiring 12
2-3-1 Input Wiring 12
2-3-2 Output Wiring 13
2-3-3 Data Setting Console Cables 17

2-1 Nomenclature

C200H-PID0□

Front Panel

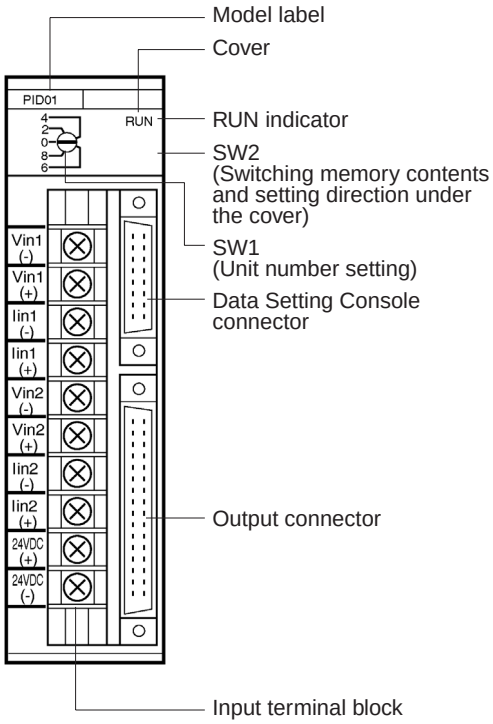

Rear Panel

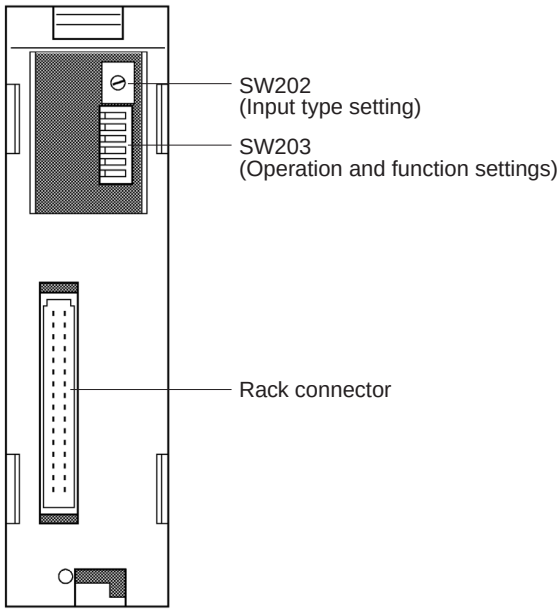

Indicators

RUN	Lit when the PID Control Unit is operating normally.

2-2 Switch Settings

The function and setting of switches are identical for all models, except for SW202.

Unit Number

SW1	Unit number setting

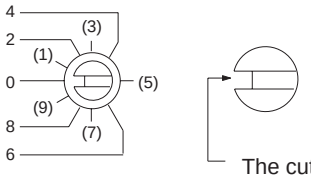

The cut-out indicates the selected position. Negative numbers are not indicated. Turn the switch with a flat-blade screwdriver. Turn the switch until it clicks in position. Do not leave the switch between two settings.

The addresses are allocated as shown in the following table according to the Unit number setting.

Unit no. setting	Allocated address
0	Wd 100 to 109
1	Wd 110 to 119
2	Wd 120 to 129
3	Wd 130 to 139
4	Wd 140 to 149
5	Wd 150 to 159
6	Wd 160 to 169
7	Wd 170 to 179
8	Wd 180 to 189
9	Wd 190 to 199

The switch is factory-set to 0.

Note If the Unit number is set to an existing Unit number, an alarm occurs and the C200H does not operate.
Turn the C200H power off before setting the Unit number. If the setting is changed with the power on, the new setting is not valid until the power is turned off and back on again.

Switching Memory Contents and Setting Direction

SW2	Switching memory contents and setting direction

Remove the cover and set the switch with the tip of a ballpoint pen or similar object.

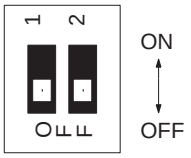

Switch no.	Pin 1	Pin 2
Function	Switching memory contents	Setting direction
ON	Normal	C200H PC
OFF	Fixed	Data Setting Console

The new setting is valid immediately after the switch setting is changed.

Removing and Attaching the Cover

Removing the Cover

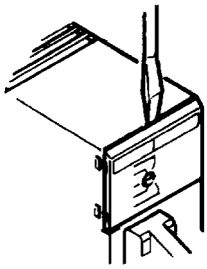

Insert a small flat-blade screw-driver between the case and the cover at the top of the Unit and lever off the cover.

Attaching the Cover

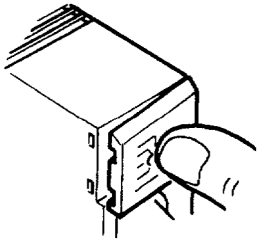

Place the right edge of the cover against the case and press into position.

Switching Memory Contents

The contents of the allocated memory differ according to the Unit number setting.

Normal	Parameters can be designated as required using commands (Refer to *4-1 Memory Allocation*).
Fixed	Parameters are allocated in advance.

Refer to *4-1 Memory Allocation* for details of the memory contents.

Setting Direction

Selects whether the data settings are made from the Data Setting Console or from the C200H PC, using a user program or Programming Console.

Executed Bank Number

The setting of the executed bank number is made from the C200H PC, regardless of the ON/OFF setting of this switch.

Input Type

SW202	Input type setting

Switch number	Loop 1	Loop 2
0	4 to 20 mA	4 to 20 mA
1	1 to 5 V	1 to 5 V
2	0 to 5 V	0 to 5 V
3	0 to 10 V	0 to 10 V
4	4 to 20 mA	1 to 5 V
5	4 to 20 mA	0 to 5 V
6	4 to 20 mA	0 to 10 V
7	1 to 5 V	0 to 5 V
8	1 to 5 V	0 to 10 V
9	0 to 5 V	0 to 10 V

The switch is factory-set to 0.

The selected position is shown by the arrow. Turn the switch with a small flat-blade screwdriver.

The permissible setting range for measurement is –999 to 9999 (EU).

Operation and Function Setting

SW203	Operation and Function Setting

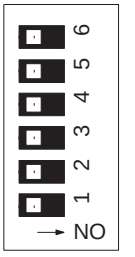

Pin no.	Function	OFF	ON
6	Loop 2 Input approximation	Straight line	Square root approximation
5	Loop 1 Input approximation	Straight line	Square root approximation
4	Loop 2	Enabled	Disabled or not used
3	SP write mode	EEPROM and RAM	RAM
2	Control action	Reverse	Normal
1	Control method	PID control	ON/OFF control

The switch is factory-set to OFF.

Input Approximation

Set each loop to either straight line (no approximation) or square root approximation.

Loop 2

Set to “enabled” to use input loop 2, or to “disabled” to use only input loop 1. It is not possible to use only input loop 2.

Note Always set this switch to the ON (disabled) position when input loop 2 is not used. A sensor error occurs if this switch is set to the OFF (enabled) position when no temperature sensor is connected to loop 2.

SP Write Mode

This setting selects the SP storage memory. Set it to ON or use RAM Write commands if the writing is to be frequently changed.

This mode applies for set point only.

Display Units

Selects whether setting and SVs displayed on the Data Setting Console are in Celsius or Fahrenheit.

Control Action

Reverse:
The output is increased when the measured temperature is below the SP (i.e., a negative temperature difference).

Normal:
The output is increased when the measured temperature is above the SP (i.e., a positive temperature difference).

Control Method

Selects the method of control.

2-3 Wiring

2-3-1 Input Wiring

C200H-PID0□

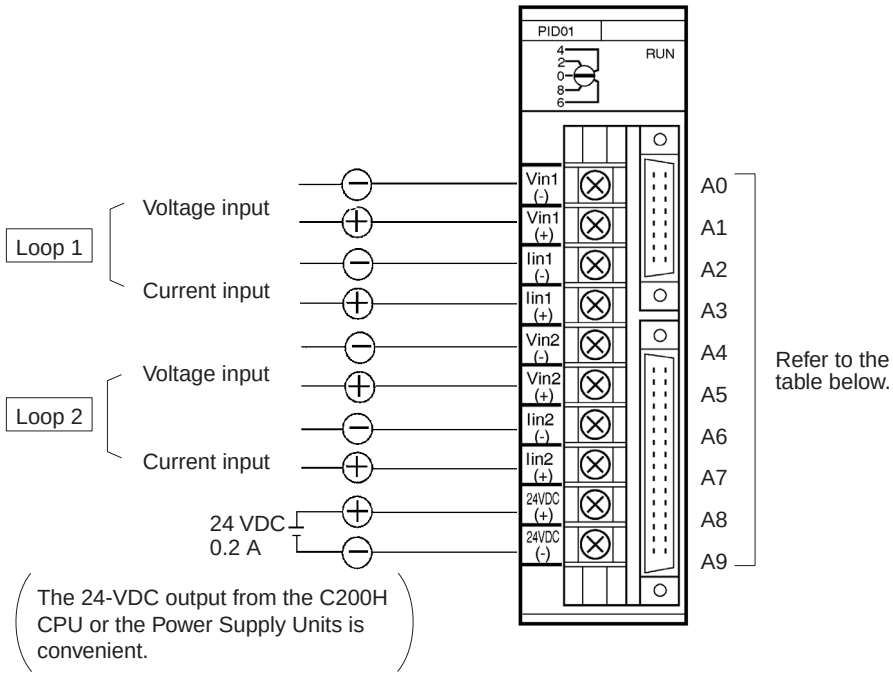

Terminal no.	Terminal name	
A0	Vin (–)	Loop 1
A1	Vin (+)	
A2	Iin (–)	
A3	Iin (+)	
A4	Vin (–)	Loop 2
A5	Vin (+)	
A6	Iin (–)	
A7	Iin (+)	
A8	24 VDC	
A9	GND	

Input Wiring Precautions

1,2,3...

1. The PID Control Unit will not operate correctly if the SW202 setting does not match the type of inputs that are connected. In addition, each loop can be connected to either voltage inputs or current inputs, but not to both. For example, if Loop 1 is set for voltage input, then current input will not work.
2. If no input lead is connected to Loop 2, turn SW203-4 on the rear of the Unit ON to disable Loop 2. A sensor error occurs if this switch is set to the OFF (enabled) position when no sensor is connected to Loop 2.
3. Be sure to wire the polarity correctly for each input.
4. Wire I/O leads in separate ducts from power leads to prevent noise problems.
5. A voltage of 24 VDC is used for the voltage output, current output and Data Setting Console power supply.

6. The terminal block is removable. Make sure that it is attached correctly after the input wiring connections are completed.

Terminal Block Connections

Use crimp terminals for wiring. Take care not to overtighten the terminal screws. Tighten the screws to a torque of 0.8 N • m.

Crimp Terminals

The screws on the terminal block are M3.5 self-rising terminal screws. Use the following types of M3.5 crimp terminals.

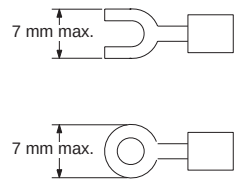

Soldered Lead

Strip insulation from 7 to 10 mm at the end of the wire and carefully solder the lead.

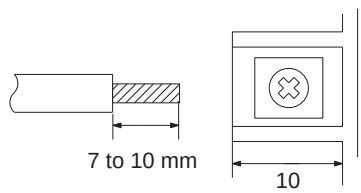

2-3-2 Output Wiring

Connection Diagrams

C200H-PID01 Transistor Output

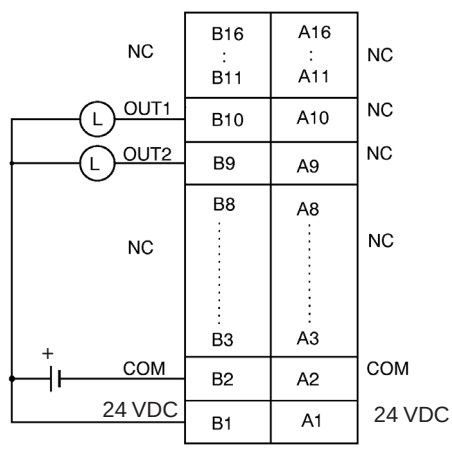

NC: Not connected
The pairs of terminals B2 to A2 and B1 to A1 are shorted internally. Always supply power to the 24-VDC terminal (B1) as this drives the internal circuits.

C200H-PID02/PID03 Voltage/Current Output

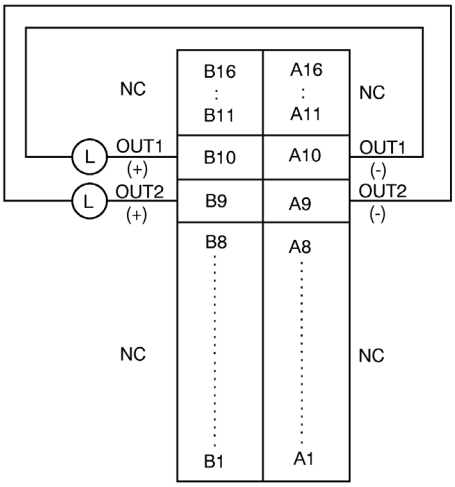

Circuit Diagrams

C200H-PID01 Transistor Output

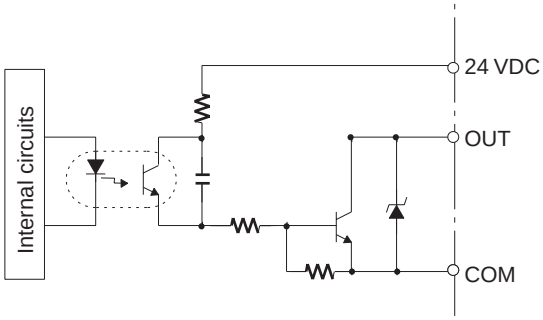

C200H-PID02 Voltage Output

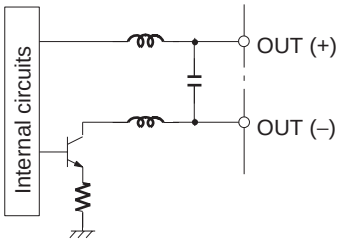

C200H-PID03 Current Output

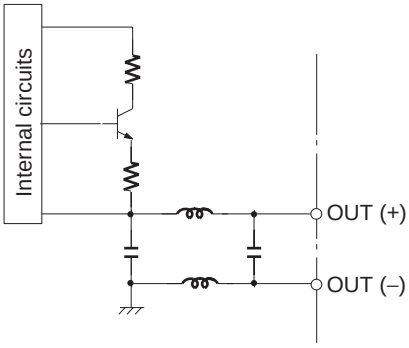

Applicable Connectors

The following connector set manufactured by Fujitsu is included with the Unit:
FCN-361J032-AU (soldering connector)
FCN-360C032-B (cover)

Connector Wiring Precautions

After soldering the lead to each pin, insulate with heat-shrink tube to prevent shorting with the adjacent terminal.

Connection Precautions

Tighten the screws after inserting the connector into the Unit. Push the connector firmly into the Remote I/O Terminal or Connector Terminal Block Converter Unit until it fully locks.

Output Cable

The output cables in the table below are recommended.

Model	Cable length (L)
ES1000-CA021-051	50 cm
ES1000-CA021-102	1 m
ES1000-CA021-202	2 m

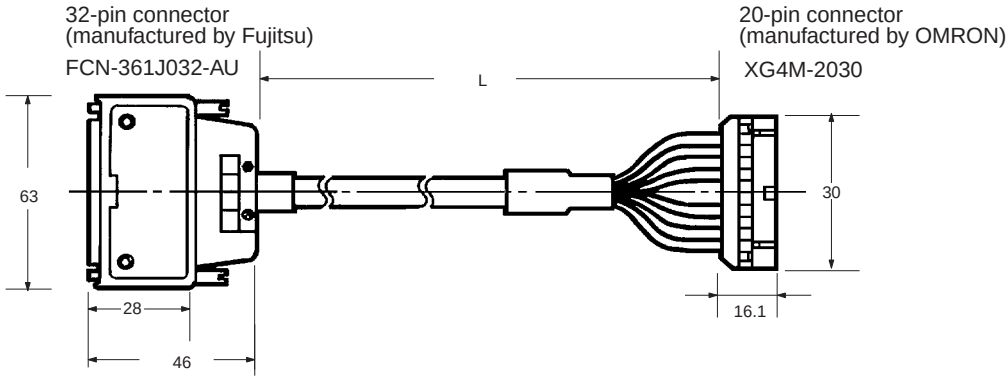

Wiring Diagrams

32-pin connector

Pin no.	Wire no.	Pin no.	Wire no.
B16		A16	
B15		A15	
B14		A14	
B13		A13	
B12		A12	
B11		A11	
B10	#1	A10	#11
B9	#2	A9	#12
B8	#3	A8	#13
B7	#4	A7	#14
B6	#5	A6	#15
B5	#6	A5	#16
B4	#7	A4	#17
B3	#8	A3	#18
B2	#9	A2	#19
B1	#10	A1	#20

Note Pins A11 through A16 and B11 through B16 are not connected.

20-pin connector

Pin no.	Wire no.	Pin no.	Wire no.
1	#1	11	#11
2	#2	12	#12
3	#3	13	#13
4	#4	14	#14
5	#5	15	#15
6	#6	16	#16
7	#7	17	#17
8	#8	18	#18
9	#9	19	#19
10	#10	20	#20

Note The pin numbers of the 20-pin connector are marked for convenience. Refer to them from the Δ mark.

Remote I/O Terminal

The Remote I/O Terminal in the table below is recommended for transistor output.

Model	Specification	Relays used
G7TC-OC08	Common (+)	8 x G7T-1112S (max. resistive load: 220 VAC, 2A)

Note One P7TF-OS08 I/O Terminal and two G7T-1112S Relays may be purchased separately and used.

Wiring Diagram

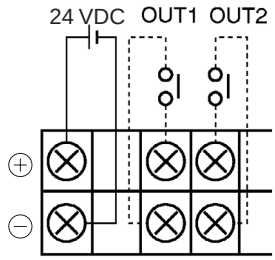

External View

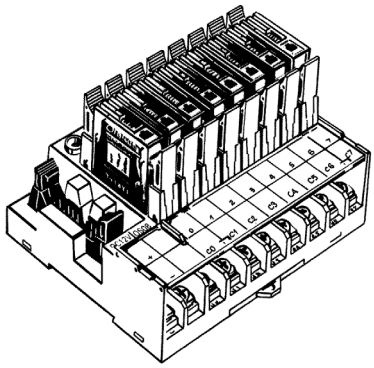

Connector Terminal Block Converter Unit

The Connector Terminal Block Converter Units in the table below are recommended for voltage output and current output type.

Model	Terminal screw size
XW2B-20G4	M 2.4
XW2B-20G5	M 3.5

External View

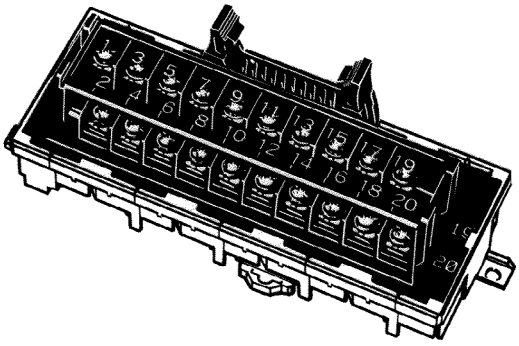

2-3-3 Data Setting Console Cables

Connecting Cable

Use the connecting cables in the table below (sold separately) to connect the Unit to the Data Setting Console.

Model	Cable length (L)
C200H-CN225	2 m
C200H-CN425	4 m

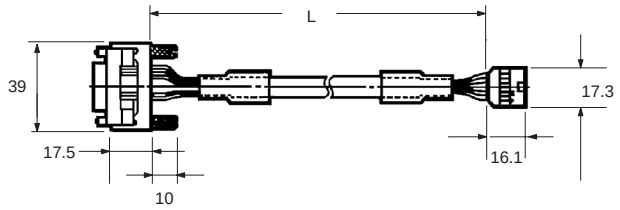

Connection Precautions

1,2,3...

1. Tighten the lock screws after inserting the connector into the Unit.
2. Push the connector firmly into the Data Setting Console until the clips fully lock.
3. The Data Setting Console uses power from input terminals A8 and A9 of the PID Control Unit, supplied through the connecting cable.
4. Install the supplied connector cover when the Data Setting Console is not used.

SECTION 3
Data Setting Console Operation

This section provides the basic operating procedures of the Data Setting Console including parameter settings and displays.

3-1 Operating Procedure 20
3-2 Data Flow 21
3-3 Nomenclature and Features. 22
3-3-1 Nomenclature 22
3-3-2 Features. 23
3-4 Parameter Displays and Settings. 24
3-4-1 Table of Parameters 24
3-4-2 How to Display and Set Parameter Data 25

3-1 Operating Procedure

After preparing the C200H PC, follow the procedure below to use the PID Control Unit.

1,2,3...

1. Set the switches on the front and rear panels according to the operating conditions. (Refer to *2-2 Switch Settings.*)

   Set SW2-2 under the display cover to the OFF position to enable data setting from the Data Setting Console.
2. Mount to Rack.

   Turn off the C200H power supply before mounting or dismounting the C200H on the Rack.
3. Connect the input wiring. (Refer to *2-3 Wiring.*)

   The 24-VDC power supply must be connected. The Data Setting Console will not operate unless the 24-VDC power supply is connected. The sensors can be connected immediately before the system is tested.
4. Connect the Data Setting Console. (Refer to *2-3-3 Data Setting Console Cables*.)
5. Turn on the 24-VDC and the C200H power supplies.

   Set the C200H to PROGRAM mode.
6. Use the Data Setting Console to make the settings for the parameters that need to be changed. (Refer to the rest of this section.)
7. Test operation and adjust data. (Refer to the rest of this section.)

   Connect the output wiring and turn on the heater power. To start the test operation, turn ON the RUN bit of the loop that is to be controlled with a device such as the Programming Console. Monitor the control conditions and adjust the data until the required control is achieved. During operation, the “bank no.” is switched to “executed bank no.” and cannot be changed from the Data Setting Console. To change it, use a device such as the Programming Console, or else use the user program.
8. Create the user programs. (Refer to *SECTION 4 PC Memory Allocation and Programming.*)

   Arrange the data for the test operation, and create the user programs for data setting, monitoring, switching the bank number, and so on. Set SW2-2 under the display cover to the ON position to enable data setting from the C200H PC.
9. Start operation.

3-2 Data Flow

The data flow in the PID Control Unit is shown in the diagram below.

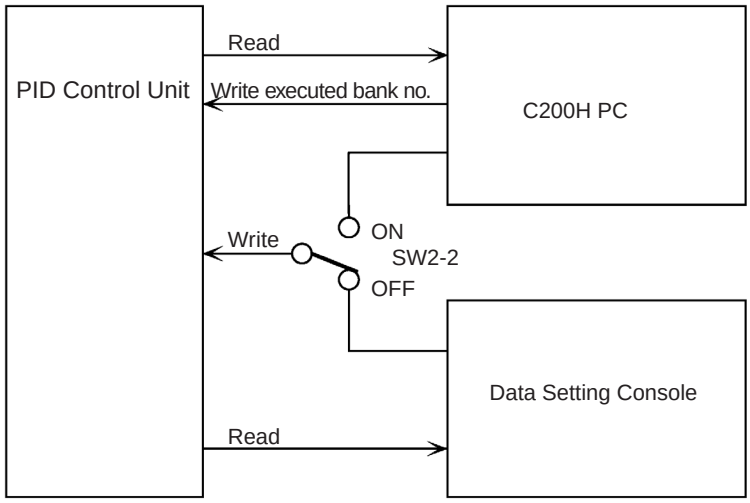

The read operation and setting the executed bank number are possible from a user program or from a device, such as the Programming Console, regardless of the ON/OFF setting of SW2-2.

Data written from the Data Setting Console and data written with the EEPROM write commands when SW2-1 (switching memory contents) is set to Normal are written to the PID Control Unit EEPROM and are consequently retained when the power supply is turned OFF.

⚠ **Caution** The PID Control Unit's built-in EEPROM can be written to 100,000 times (service life). If more than 100,000 EEPROM write operations are performed, the memory will become corrupted. Do not use a Unit that has processed more than 100,000 EEPROM write operations.

Data written with RAM write commands when SW2-1 (switching memory contents) is set to Normal, the SP value set when SW2-1 is set to Fixed, and executed bank number settings made from the C200H PC are written directly to RAM and are not saved to EEPROM. This data is lost when the power supply is turned OFF.

Data Settings from Data Setting Console

Set SW2-2 under the display cover to the OFF position to enable data setting from the Data Setting Console.

The "bank no." can be set when operation is stopped (i.e., when the RUN bit is OFF). During operation it is switched to "executed bank no." and cannot be changed from the Data Setting Console. To change the executed bank number, use a user program or a device such as the Programming Console.

Operation begins when the RUN bit of the output relay turns ON. (For information on output relays, refer to *SECTION 4 PC Memory Allocation and Programming*.

3-3 Nomenclature and Features

3-3-1 Nomenclature

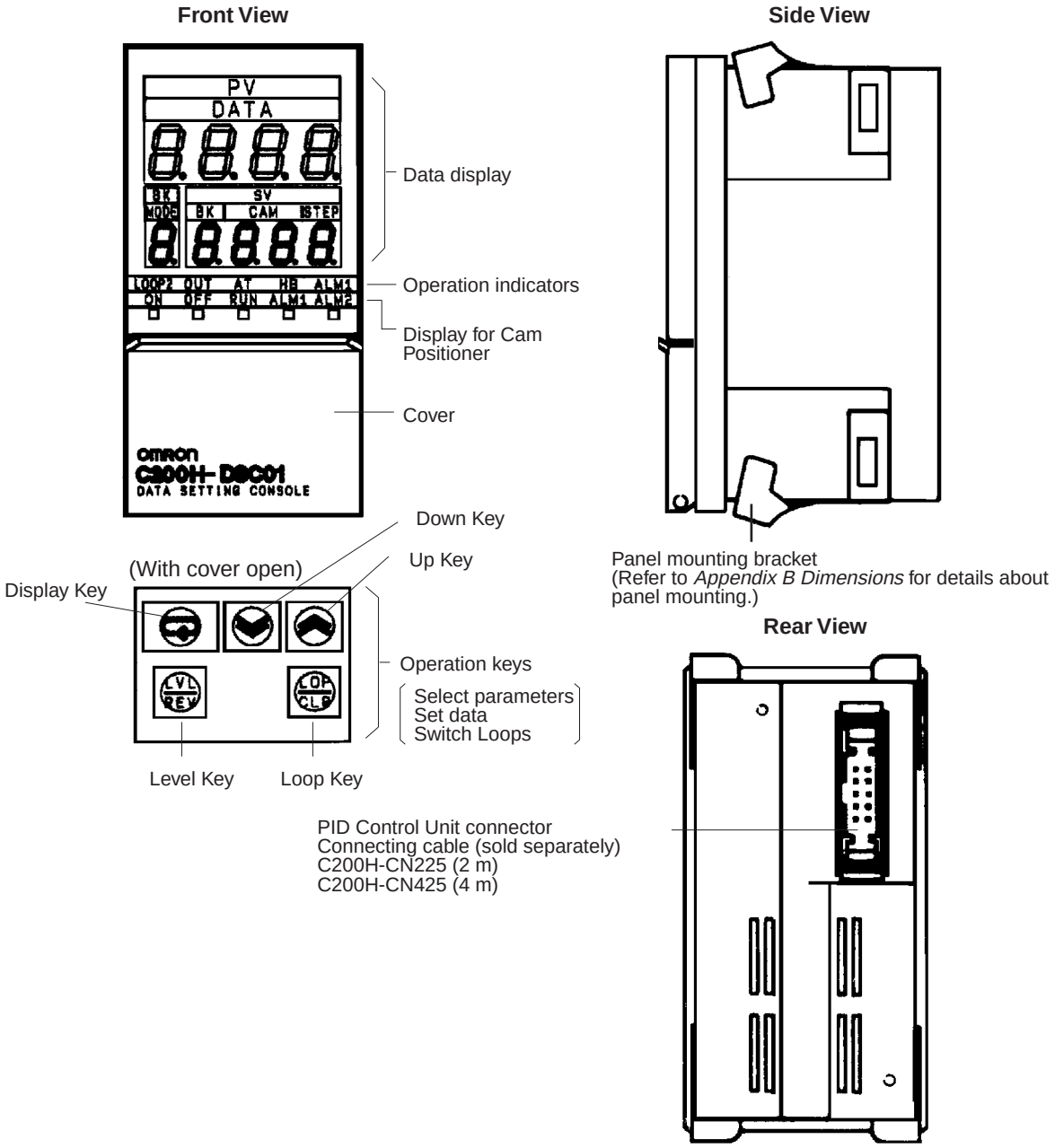

The bottom row of the operation keys have upper and lower labels. The upper labels apply to PID Control Unit operation. The lower labels are for the Cam Positioner Unit.

Two display sheets are supplied: one for the PID Control Unit and one for the Cam Positioner Unit. If the Data Setting Console is to be used with the PID Control Unit only, attach the display sheet for the PID Control Unit.

Note The Data Setting Console will not operate unless a 24-VDC power supply is connected to the PID Control Unit input terminals.

3-3-2 Features

Data Display

Name	Function
PV (Process Value)	Displays the PV or the parameter symbol selected with the Level or Display Key (Refer to next page).
SV (Set Value)	The display is as follows, according to the PV display contents. PV (process value): SV (set value) is displayed. Parameter symbol: Setting/monitor data is displayed.
BK (Bank Number)	Displays the bank number of the data presently being displayed. During operation, the executed bank number is displayed. (See note)

Note Operation begins when the RUN bit of the output relay turns ON.

Operation Indicators

Name	Function	
LOOP2	Indicates whether the displayed settings relate to Loop 1 or Loop 2. Press the Loop Key and hold down for approximately 2 seconds to switch between Loop 1 and Loop 2. Indicator OFF: Loop 1 Indicator ON: Loop 2	
OUT (Output)	Turns ON when the output is ON for transistor output or voltage output types.	These indicators relate to the currently displayed loop.
AT (Auto-tuning)	Blinks at approximately 1 second intervals during auto-tuning.	
HB (Heater Burnout)	Turns ON to indicate a heater burnout alarm.	
ALM1 (Alarm)	Turns ON to indicate the temperature is in the alarm range set with Alarm SV 1 (upper- and lower-limit alarm). Refer to the following page.	

Display Patterns

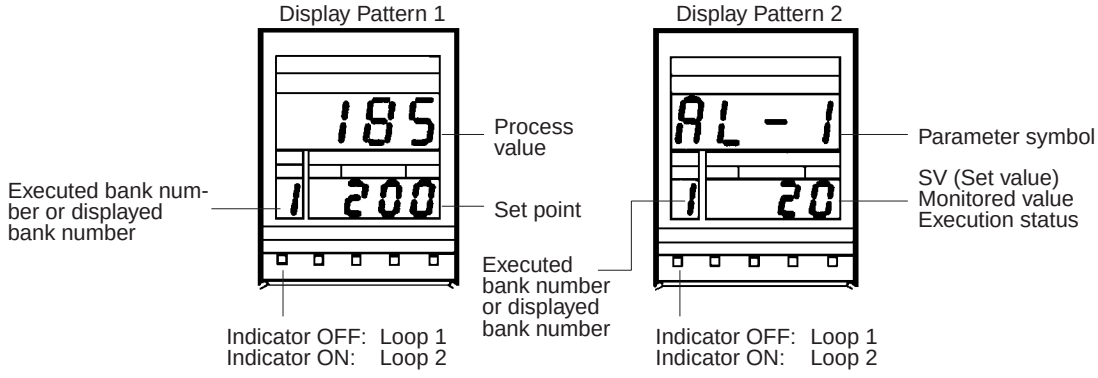

Operation Keys

Name	Function
Level Key	The parameter items are divided into three display groups (Refer to display levels 0 to 2 in the table below). Press this key to switch from one group to another. The display levels automatically cycle in the sequence 0 –> 1 –> 2 –> 0 when the key is held down for approximately 2 seconds.
Display Key	Press this key to select the required parameter from the selected display level 0 to 2 (Refer to table below). The parameters cycle automatically when the key is held down.
Loop Key	Press this key for approximately two seconds to switch between Loop 1 and Loop 2.
Up Key	Press this key to increment SV. The SV increment continuously while the key is held down. The SV display blinks when the value reaches its upper limit.
Down Key	Press this key to decrement an SV. The SV decreases continuously while the key is held down. The SV display blinks when the value reaches its lower limit.

3-4 Parameter Displays and Settings

3-4-1 Table of Parameters

Display level	Parameter	Display symbol	Write	Read	Loop no.	Bank no.	Data range	Default value	Page
0	PV monitor (see note 3)	---	No	Yes	Yes	No	Scaling lower limit –10% to scaling upper limit +10%	(Unit: EU)	26
	Manual output volume (see note 6)	o	Yes	Yes	Yes	No	–5 to 105%	0%	26
	Set point (see note 3)	---	Yes	Yes	Yes	Yes	Scaling lower limit to scaling upper limit	0 EU	26
	Bank number	bP	See note 5	Yes	Yes	No	1 to 8	1	26
	Alarm SV 1 (see notes 3, 4)	AL-1	Yes	Yes	Yes	Yes	Alarm mode 1, 4, 5: 0 to 9999 Other: –999 to 9999	0 EU	27
	Alarm SV 2 (see notes 3, 4)	AL-2	Yes	Yes	Yes	Yes			
	Input shift value (see note 3)	In-S	Yes	Yes	Yes	Yes	–999 to 9999	0 EU	27
	Proportional band (see note 1)	P	Yes	Yes	Yes	Yes	0.0 to 999.9% FS	10.0% FS	27
	Integral (reset) time (see note 1)	I	Yes	Yes	Yes	Yes	0 to 9999 s	240 s	
	Derivative (rate) time (see note 1)	d	Yes	Yes	Yes	Yes	0 to 9999 s	40 s	

Display level	Parameter	Display symbol	Write	Read	Loop no.	Bank no.	Data range	Default value	Page
1	Decimal point position	dP	Yes	Yes	Yes	No	0 to 3	1	28
	Scaling lower limit	InL	Yes	Yes	Yes	No	–999 to (scaling upper limit – 1 digit)	0	28
	Scaling upper limit	InH	Yes	Yes	Yes	No	(Scaling lower limit + 1) to 9999	1000	28
	Digital filter	dF	Yes	Yes	Yes	No	0 to 100 s	0 s	28
	Control period (see note 1)	CP	Yes	Yes	Yes	No	1 to 99 s	20 s	29
	Hysteresis (see note 2)	HYS	Yes	Yes	Yes	Yes	0.0 to 100.0% FS	0.2% FS	29
	Alarm hysteresis (see note 4)	HYSA	Yes	Yes	Yes	No	0.0 to 100.0% FS	0.1% FS	29
2	Control output variable monitor	o	No	Yes	Yes	No	0.0 to 100.0%	0.0%	30
	Auto-tuning start/ stop (see note 1)	At	Yes	Yes	Yes	No	---	---	30
	Copy bank	bCPY	Yes	Yes	Yes	No	---	---	30
	Input-type monitor	In-t	No	Yes	No	No	0 to 9	Setting for SW202	31
	Alarm 1 mode	ALt1	Yes	Yes	Yes	No	0 to 9	2	31
	Alarm 2 mode	ALt2							

Yes: Possible.
No: Not possible or not required.

Note
1. Only when advanced PID control is selected. (Switch 203-1 = OFF)
2. Only when ON/OFF control is selected. (Switch 203-1 = ON)
3. The decimal point position is set by the “decimal point position” parameter.
4. Does not apply when Alarm Mode = 0.
5. Writing is not possible during operation (i.e., when RUN is ON).
6. Only when the output relay “MAN” bit = 1.

3-4-2 How to Display and Set Parameter Data

Basic Operation

When not specifically explained, use the keys as described below.

Changing the Display Level
When the Level Key is pressed, the leading parameter for each level is displayed.

Changing Parameters
When the Display Key is pressed, the parameters are displayed in order. There may be skips depending on the model and DIP switch settings.

Changing the SV
Pressing the Up Key or the Down Key changes the SV. The SV is retrieved automatically.

Changing the Loop
The loop is changed each time the Loop Key is pressed. It can be confirmed by means of the LOOP 2 indicator.

Manual Output Volume (Display Level 0)

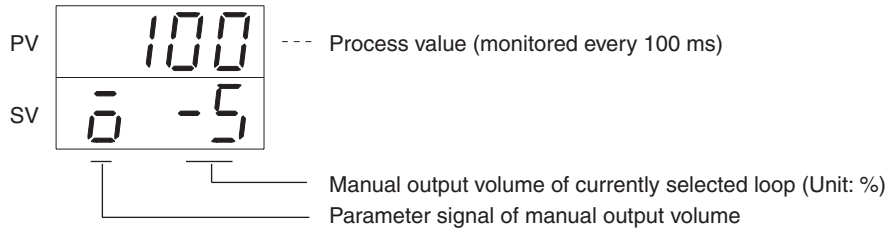

Settings

- This is used to manually manipulate the output volume. It is valid when the output relay “MAN” bit is ON.
- The “MAN” bit can be turned ON and OFF by means of a device such as the Programming Console, or by means of the user program. For details, refer to *Section 4 PC Memory Allocation and Programming*.

PV and SV (Display Level 0)

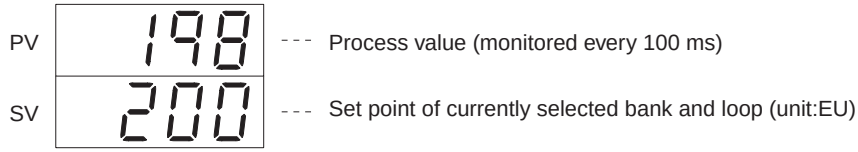

Valid SV Range

Set the set point in the range between the scaling lower limit and the scaling upper limit.

Error Display

When a sensor error occurs, one of the codes below and the detected temperature blink alternately in the PV display.

SEr 1	The analog input is out of the range: (input measurement range + 10%FS). That is, 10%FS below the lower limit or 10%FS above the upper limit. Includes broken or incorrect input wiring. SEr 1 : Loop1 or Loop1 and Loop2 simultaneously. SEr2 : Loop2
SEr2	

Bank Number (Display Level 0)

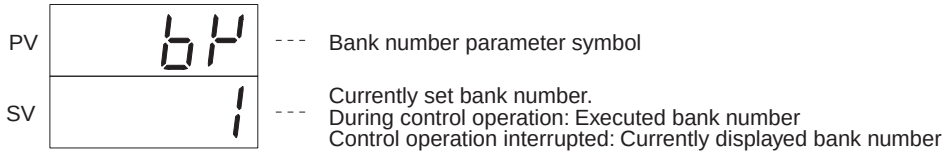

Settings

- The bank number can be changed.
- The changed SV is reflected in the bank number display (BK).

Bank Number and Executed Bank Number

The executed bank number cannot be changed from the Data Setting Console. When changing these parameters from the Data Setting Console, stop operation. While operation is stopped, the bank number setting can be changed.

Alarm SV 1 (Display Level 0)

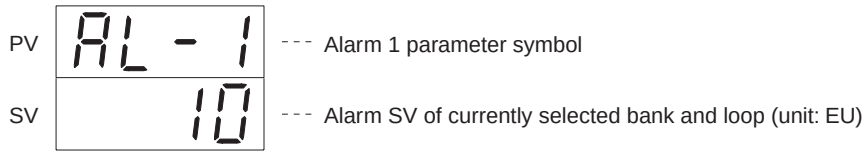

Invalid if ALARM mode = 0.

Alarm SV 2 (Display Level 0)

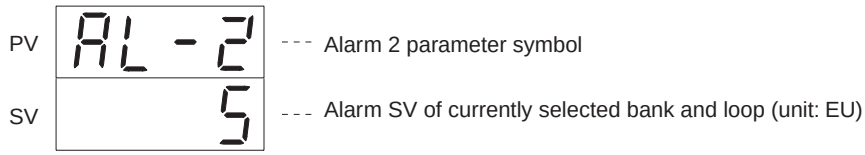

Invalid if ALARM mode = 0.

Input Shift Value (Display Level 0)

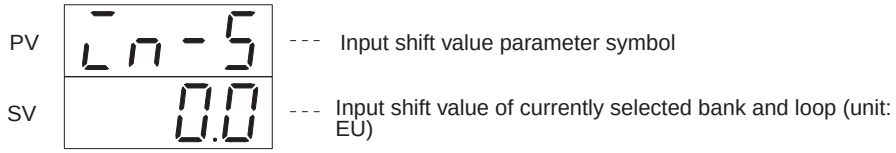

If the displayed value differs from the actual value due to the sensor position or some other conditions, set the input shift value such that the correct value is displayed.

Proportional Band (Display Level 0)

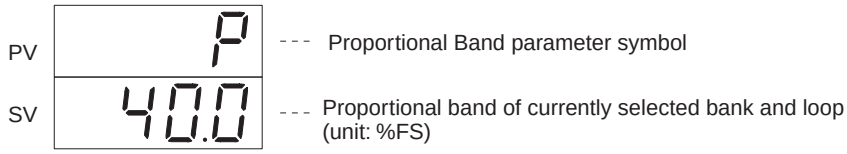

- This sets the proportional band. It is valid only when SW203-1 is set to OFF (i.e., PID control).
- This value is reflected even when auto-tuning (AT) is executed.
- If this value is set to “0.0,” ON/OFF control is executed with PID control selected.

Integral (Reset) Time (Display Level 0)

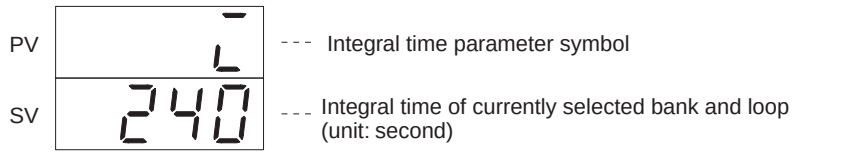

- This sets the integral time. It is valid only when SW203-1 is set to OFF (i.e., PID control).
- This value is reflected even when auto-tuning (AT) is executed.

Derivative (Rate) Time (Display Level 0)

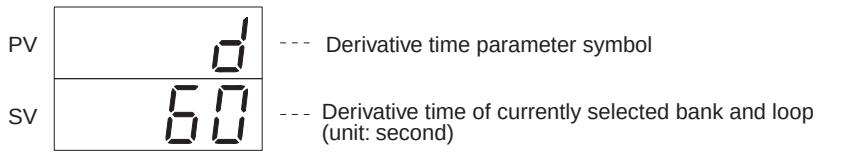

- This sets the integral time. It is valid only when SW203-1 is set to OFF (i.e., PID control).
- This value is reflected even when auto-tuning (AT) is executed.

Decimal Point Position (Display Level 1)

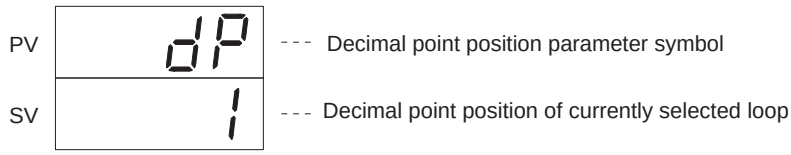

The decimal point position setting applies to the following parameters: PV monitor, SV, alarm SV, and input shift value.

Scaling Lower Limit (Display Level 1)

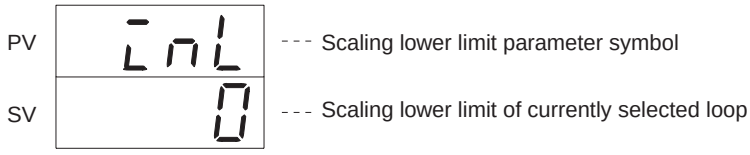

This sets the scaling lower limit. The default value is 0%.

Scaling Upper Limit (Display Level 1)

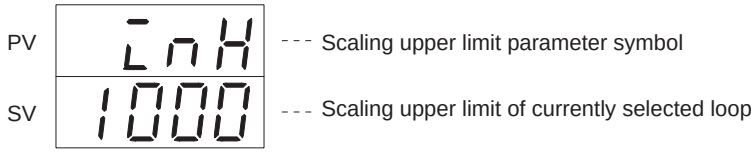

This sets the scaling upper limit. The default value is 1000%.

Digital Filter (Display Level 1)

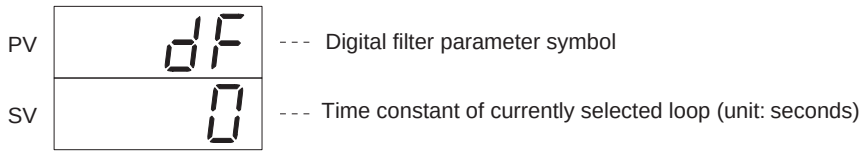

This delays the response to sudden input changes. The SV is designated by “T” in the illustration below.

Input

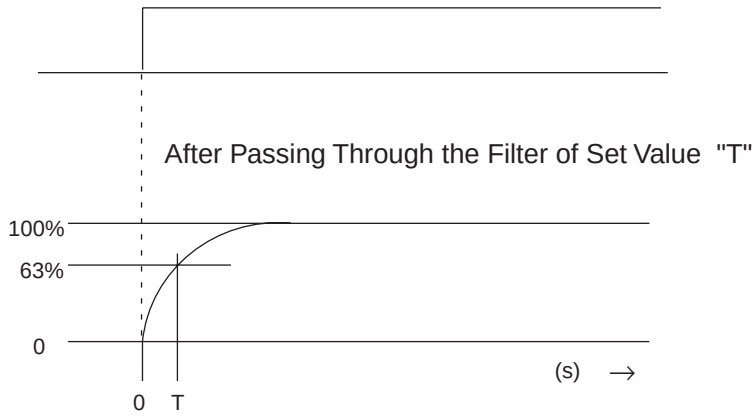

Control Period (Display Level 1)

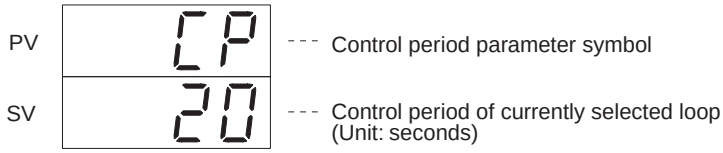

- This sets the control period. It is valid when SW203-1 is OFF (PID control).
- The control period is the time required to complete one transistor output or voltage output ON/OFF cycle.

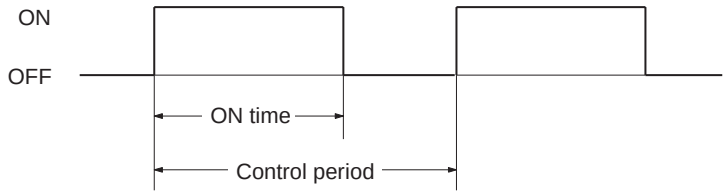

Hysteresis (Display Level 1)

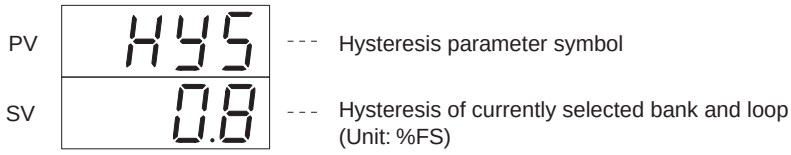

- Hysteresis prevents control output chattering and eliminates noise influences.
- When switching from ON to OFF, operation proceeds at the set point. When switching from OFF to ON, operation proceeds at a lower point determined by the hysteresis SV, as shown in the illustration below.

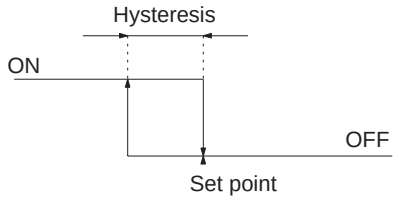

Hysteresis is applied in the following situations.

- When ON/OFF control is selected (i.e., when SW203-1 is ON).
- When advanced PID control is selected (i.e., when SW203-1 is OFF) and P (proportional band) is 0.

Alarm Hysteresis (Display Level 1)

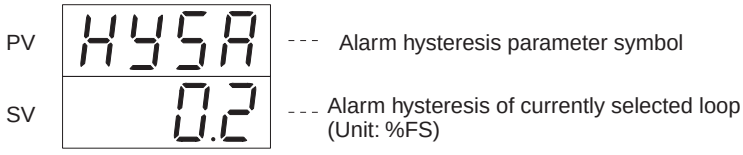

- Alarm hysteresis prevents alarm output chattering and eliminates noise influences. It is invalid when both ALARM mode 1 and ALARM mode 2 are set to “0.”
- When switching from OFF to ON, operation proceeds at the set point. When switching from ON to OFF, a hysteresis SV operating band is pro-

vided which may be either higher or lower than the set point, depending on the ALARM mode.

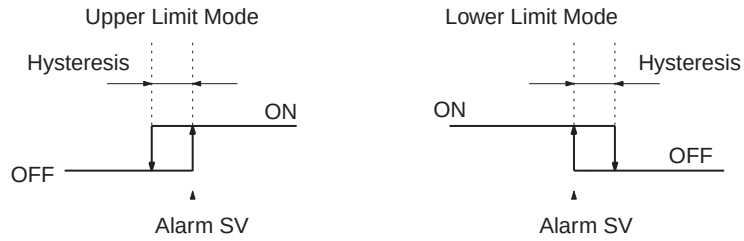

The alarm output is OFF if the present value lies within the hysteresis band when the Unit is turned on.

Control Output Variable Monitor (Display Level 2)

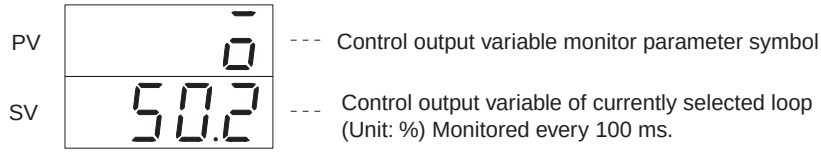

The relationship between the control output variable and control period is defined by the formula below:

$$\text{Control output variable (\%)} = \frac{\text{ON time}}{\text{Control period}} \times 100$$

The control output variable during ON/OFF control (when SW203-1 on the rear panel is ON) is ON = 100% and OFF = 0%.

Auto-tuning Start/Stop (Display Level 2)

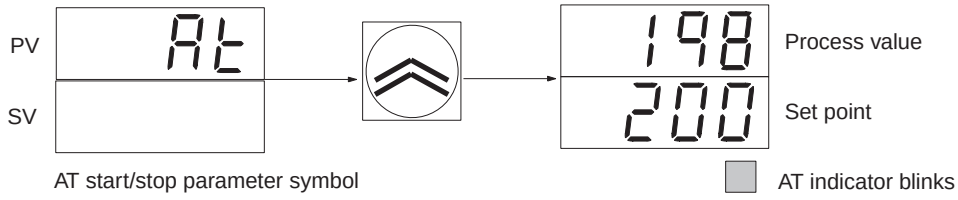

- The auto-tuning operation begins when the Up Key is pressed. The PV and SV return to the respective present value and set point displays. While auto-tuning is in progress the AT indicator blinks.
- To interrupt, press the Level and Display Keys again to display At. When At appears, press the Up Key. When the interrupt is executed, the AT display disappears and the process value is displayed.
- When auto-tuning is completed, the AT indicator stops blinking and the P, I, and D data is written to EEPROM.

Copy Bank (Display Level 2)

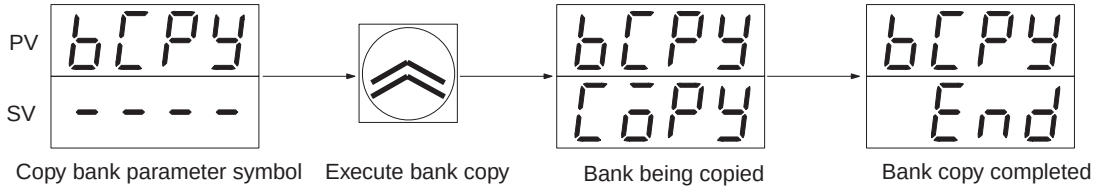

- When the Up Key is pressed, the data other than the set point is copied from bank number 1 to banks 2 through 8.
- Use this method to create data in banks 2 through 8 by slightly modifying the data in bank number 1.

Input-type Monitor (Display Level 2)

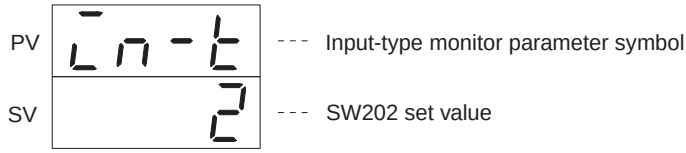

Note Cannot be set.

Alarm 1 and Alarm 2 Modes (Display Level 2)

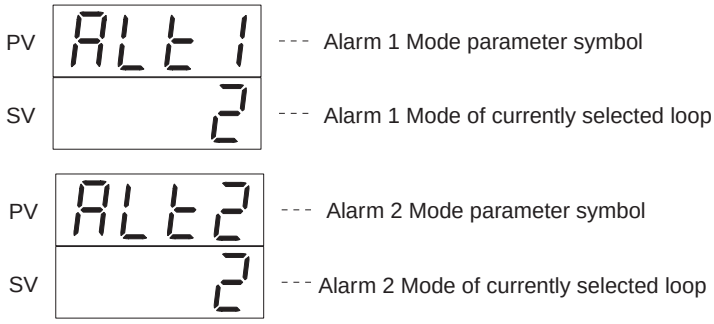

Select the desired alarm type from the following chart and set the number (X: set value)

ALARM mode	Alarm Type	Alarm Range (0 … SP)
0	No alarm	
1	Upper- and lower-limit alarm	X X
2	Upper-limit alarm	X
3	Lower-limit alarm	X
4	Upper- and lower-limit range alarm	X X
5	Upper- and lower-limit alarm with standby sequence	X X
6	Upper-limit alarm with standby sequence	X
7	Lower-limit alarm with standby sequence	X
8	Absolute-value upper-limit alarm	X
9	Absolute-value lower-limit alarm	X

Standby Sequence

When the power is turned on, the value is below the set point, so alarm output status occurs with regard to the lower limit alarm. In this situation, if “lower limit alarm with standby sequence” is selected, the standby sequence recognizes that the value is out of the alarm range and then outputs an alarm when the value enters the alarm range once more.

Lower Limit Alarm with Standby Sequence

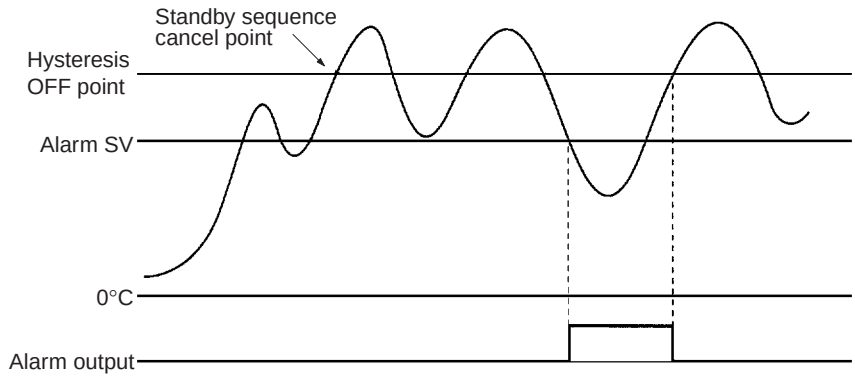

The standby sequence is restarted in the following situations.

- When the power is turned on.
- When the set point is changed.
- When the executed bank number is changed.
- When the ALARM mode is changed.
- When changing from stop to run.

SECTION 4
PC Memory Allocation and Programming

This section provides the C200H PC's memory allocation for the PID Control Unit. Basic programming procedures and examples are also provided.

4-1 Memory Allocation 34
4-1-1 Memory Allocation Table 35
4-1-2 Memory Contents. 36
4-1-3 Table of Commands 40
4-2 Data Flow 42
4-3 Programming 42
4-3-1 Example with SW2-1 in the Fixed Position. 42
4-3-2 Example 1: Write with SW2-1 in the Normal Position 43
4-3-3 Example 2: Read with SW2-1 in the Normal Position 46
4-3-4 Operation Timing 49

4-1 Memory Allocation

Memory Allocation

According to the Unit number switch setting on the front of the C200H PID Control Unit, 10 words are allocated for each Unit number in the Special I/O Unit IR area between IR100 to IR199, which is used as the I/O refresh data area. The IR area used by the C200H PID Control Unit is refreshed on each C200H PC I/O refresh scan.

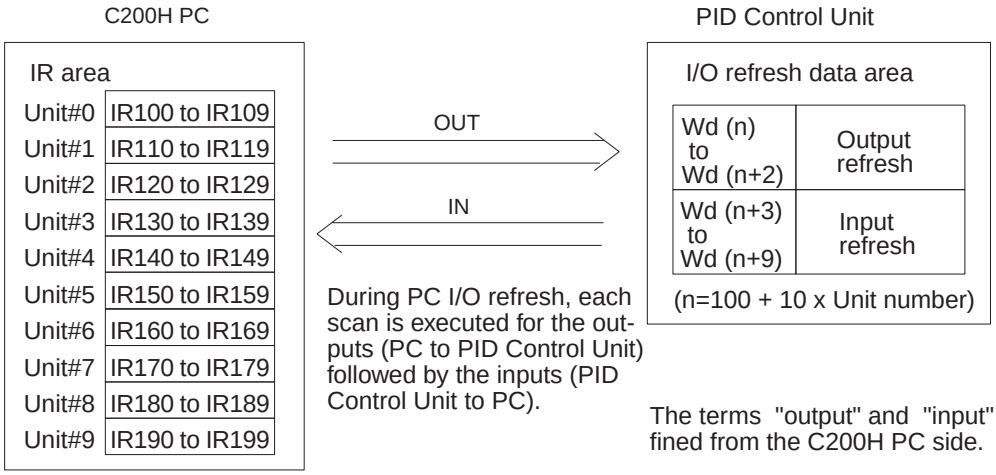

During PC I/O refresh, each scan is executed for the outputs (PC to PID Control Unit) followed by the inputs (PID Control Unit to PC).

The terms "output" and "input" are defined from the C200H PC side.

Note A Duplicate I/O Unit error occurs if the set Unit number corresponds to the number of an existing Special I/O Unit.

Selecting Allocated Data

The data allocated to each IR word due to the Unit number setting is determined by the setting of SW2-1 on the front of the Unit.

ON	Normal	All data can be set using commands.
OFF	Fixed	Parameters are fixed for the set point (SV).

This setting becomes valid immediately when the switch is set.

4-1-1 Memory Allocation Table

SW2-1 in Fixed Position

(n=100 + 10 x Unit number)

I/O	Word	Bit															
		15	14	13	12	11	10	09	08	07	06	05	04	03	02	01	00
Output	n	Loop 1 SP (see note)															
		0 to 9, F				0 to 9				0 to 9				0 to 9			
	n+1	Loop 2 SP (see note)															
		0 to 9, F				0 to 9				0 to 9				0 to 9			
	n+2	Loop 1 executed bank number				Loop 2 executed bank number				Loop 1		Loop 2		0			
										MAN	RUN	MAN	RUN				
Input	n+3	Loop 1 PV (see note)															
		0 to 9, F				0 to 9				0 to 9				0 to 9			
	n+4	Loop 2 PV (see note)															
		0 to 9, F				0 to 9				0 to 9				0 to 9			
	n+5	Loop 1 SP (see note)															
		0 to 9, F				0 to 9				0 to 9				0 to 9			
	n+6	Loop 2 SP (see note)															
		0 to 9, F				0 to 9				0 to 9				0 to 9			
	n+7	Loop 1 executed bank number				Loop 2 executed bank number				0				0	0	SW 2	
																2	1
	n+8	Loop 1 status data															
		0	Sensor error	0	0	0		MAN	RUN	0	0	0	Control output	AT	0	AL1	AL2
	n+9	Loop 2 status data															
		0	Sensor error	0	0	0		MAN	RUN	0	0	0	Control output	AT	0	AL1	AL2

Note Four digits BCD and the decimal point position are designated by the “decimal point position” parameter. The most significant digit (F) = minus (–).

SW2-1 in Normal Position

(n=100 + 10 x Unit number)

I/O	Word	Bit															
		15	14	13	12	11	10	09	08	07	06	05	04	03	02	01	00
Output	n	Read/write instruction															
		Read/write		Loop no.		Bank no.				Instruction							
	n+1	Write data (see note)															
		0 to 9, F				0 to 9				0 to 9				0 to 9			
	n+2	Loop 1 executed bank number				Loop 2 executed bank number				Loop 1		Loop 2		0		0	Write request
										MAN	RUN	MAN	RUN				
Input	n+3	Loop 1 PV (see note)															
		0 to 9, F				0 to 9				0 to 9				0 to 9			

I/O	Word	Bit															
		15	14	13	12	11	10	09	08	07	06	05	04	03	02	01	00
Input	n+4	Loop 2 PV (see note)															
		0 to 9, F				0 to 9				0 to 9				0 to 9			
	n+5	Read data (see note)															
		0 to 9, F				0 to 9				0 to 9				0 to 9			
	n+6	0				Write error	0	0	Write complete	0				0	0	0	Read complete
	n+7	Loop 1 executed bank number				Loop 2 executed bank number				0				0	0	SW2	
																2	1
	n+8	Loop 1 status data															
		0	Sensor error	0	0	0		MAN	RUN	0	0	0	Control output	AT	0	AL1	AL2
	n+9	Loop 2 status data															
		0	Sensor error	0	0	0		MAN	RUN	0	0	0	Control output	AT	0	AL1	AL2

Note Four digits BCD and the decimal point position are designated by the “decimal point position” parameter. The most significant digit (F) = minus (–).

4-1-2 Memory Contents

SW2-1 in Fixed Position

(n=100 + 10 x Unit number)

I/O	Address		Data item	Data contents
	Word	Bit		
Output	n	15 to 00	Loop 1 SP	Sets the Loop 1 and Loop 2 SP (set point) as 4-digit BCD data. Set the most significant digit to F for minus (–). **Note** These specified values apply to the bank number set with Wd (n+2) and can are written directly to RAM. (Refer to *4-3 Programming.*)
	n+1	15 to 00	Loop 2 SP	
	n+2	15 to 12	Loop 1 executed bank number	Sets the bank number executed for Loop 1 and Loop 2 as 1-digit BCD data. Set executed bank numbers from 1 to 8. If the value is set out of this range, the bank number reverts to the previous value.
		11 to 08	Loop 2 executed bank number	
		07	Loop 1 MAN	This is the Loop 1 Manual Output Mode bit. When it is set to 1, the Unit goes into Manual Output Mode.
		06	Loop 1 RUN	This is the Loop 1 Run/Stop bit. When it is set to 1, operation starts; when it is set to 0, operation stops.
		05	Loop 2 MAN	This is the Loop 2 Manual Output Mode bit. When it is set to 1, the Unit goes into Manual Output Mode.
		04	Loop 2 RUN	This is the Loop 2 Run/Stop bit. When it is set to 1, operation starts; when it is set to 0, operation stops.
		03 to 00	---	Not used. Set to 0.

I/O	Address		Data item	Data contents	
	Word	Bit			
Input	n+3	15 to 00	Loop 1 PV	Outputs the Loop 1 and Loop 2 PV (process value) as 4-digit BCD data. The most significant digit is F for minus (–).	
	n+4	15 to 00	Loop 2 PV		
	n+5	15 to 00	Loop 1 SP	Outputs the Loop 1 and Loop 2 SP (set point) as 4-digit BCD data. The most significant digit is F for minus (–).	
	n+6	15 to 00	Loop 2 SP		
	n+7	15 to 12	Loop 1 executed bank number	Outputs the bank number currently executed for Loop 1 and Loop 2 as 1-digit BCD data.	
		11 to 08	Loop 2 executed bank number		
		07 to 02	---	Not used. Each bit is set to 0.	
		01	SW2-2	Outputs the ON/OFF status of SW2-2 (setting direction). 0: Data Setting Console 1: C200H PC	
		00	SW2-1	Outputs the ON/OFF status of SW2-1 (switching memory contents). 0: Fixed 1: Normal	
	n+8 Loop 1 n+9 Loop 2	15	---	Not used. Set to 0.	Loop 1/2 status data
		14	Sensor error	Bit set to 1 if the sensor is not connected, a sensor wire is broken, or the input data exceeds the operational temperature range.	
		13 to 10	---	Not used. Each bit is set to 0.	
		09	MAN	ON (set to 1) for Manual Output Mode.	
		08	RUN	ON (set to 1) during operation.	
		07 to 05	---	Not used. Each bit is set to 0.	
		04	Control output	Bit set to 1 when the control output (transistor or voltage output) is ON.	
		03	AT	Bit set to 1 during auto-tuning (AT).	
		02	---	Not used. Set to 0.	
		01	AL1	Bit set to 1 when the value enters the set alarm range. (Refer to page 23.)	
		00	AL2		

SW2-1 in Normal Position

(n=100 + 10 x Unit number)

I/O	Address		Data item	Data contents	
	Word	Bit			
Output	n	15 and 14	Read/Write	The data bit sets operation to read or write. Write = 01 Read = 00	Read/Write command
		13 and 12	Loop no.	The data bit sets the Loop Number to which the read or write operation applies. Loop 1 = 01, Loop 2 = 10	
		11 to 08	Bank no.	Sets the bank number to which the read or write operation applies as 1-digit BCD data. Set executed bank numbers from 1 to 8.	
		07 to 00	Command	Sets the command code (Refer to page 40) for the read or write operation as 2-digit BCD data.	

I/O	Address		Data item	Data contents
	Word	Bit		
Output	n+1	15 to 00	Write data	Set the SP for a write operation as 4-digit BCD data. The least significant digit of the actual data matches the least significant digit of the set value. Set the most significant digit to F for minus (–) values. The write operation commences when the write request flag (Wd (n+2), bit 00) turns ON.
	n+2	15 to 12	Loop 1 executed bank number	Set the bank number currently executed for Loop 1 and Loop 2 as 1-digit BCD data. Executed bank numbers are from 1 to 8. If the value is set out of this range, the bank number reverts to the previous value.
		11 to 08	Loop 2 executed bank number	
		07	Loop 1 MAN	This is the Loop 1 Manual Output Mode bit. When it is set to 1, the Unit goes into Manual Output Mode.
		06	Loop 1 RUN	This the Loop 1 Run/Stop bit. When it is set to 1, operation starts; when it is set to 0, operation stops.
		05	Loop 2 MAN	This is the Loop 2 Manual Output Mode bit. When it is set to 1, the Unit goes into Manual Output Mode.
		04	Loop 2 RUN	This the Loop 2 Run/Stop bit. When it is set to 1, operation starts; when it is set to 0, operation stops.
		03 to 01	---	Not used. Set to 0.
		00	Write request	Turn this bit ON to write the data in Wd (n+1), by means of this command. Turn this bit OFF after the Write Complete Flag (Wd (n+6), bit 08) turns ON.
Input	n+3	15 to 00	Loop 1 PV	Outputs the Loop 1 and Loop 2 PV (process value) as 4-digit BCD data. The decimal point position is designated by the “decimal point position” parameter. Set the most significant digit to F for minus (–) values.
	n+4	15 to 00	Loop 2 PV	
	n+5	15 to 00	Read data	Outputs the data read with the commands set with Wd (n). The decimal point position is designated by the “decimal point position” parameter. Set the most significant digit to F for minus (–) values.
	n+6	15 to 12	---	Not used. Each bit is set to 0.
		11	Write error	Bit set to 1 when the write data exceeds the set permissible range. The bit is automatically set to 0 when the Write Request Flag (Wd (n+2), bit 00) turns OFF.
		10 and 09	---	Not used. Each bit is set to 0.
		08	Write complete	Bit set to 1 when the write operation executed by means of the command set with Wd (n) ends normally. The bit is automatically set to 0 when the Write Request Flag (Wd (n+2), bit 00) turns OFF.
		07 to 01	---	Not used. Each bit is set to 0.
		00	Read complete	Bit set to 1 when the read operation executed by means of the command set with Wd (n) ends normally. The bit is automatically set to 0 when the next command is set.

I/O	Address		Data item	Data contents	
	Word	Bit			
Input	n+7	15 to 12	Loop 1 executed bank number	Outputs the bank number currently executed for Loop 1 and Loop 2 as 1-digit BCD data.	
		11 to 08	Loop 2 executed bank number		
		07 to 02	---	Not used. Each bit is set to 0.	
		01	SW2-2	Outputs the ON/OFF status of SW2-2 (setting direction). 0: Data Setting Console 1: C200H PC	
		00	SW2-1	Outputs the ON/OFF status of SW2-1 (switching memory contents). 0: Fixed 1: Normal	
	n+8 Loop 1 n+9 Loop 2	15	---	Not used. Set to 0.	Loop 1/2 status data
		14	Sensor error	Bit set to 1 if an input is not connected, an input wire is broken, or the input data exceeds the operational range.	
		13 to 10	---	Not used. Each bit is set to 0.	
		09	MAN	ON (set to 1) for Manual Output Mode.	
		08	RUN	ON (set to 1) during operation.	
		07 to 05	---	Not used. Each bit is set to 0.	
		04	Control output	Bit set to 1 when the control output (transistor or voltage output) is ON.	
		03	AT	Bit set to 1 during auto-tuning (AT).	
		02	---	Not used. Set to 0.	
		01	AL1	Bit set to 1 when the value enters the set alarm range (Refer to page 23).	
		00	AL2		

4-1-3 Table of Commands

The command codes shown below are set in bits (Wd n) 07 to 00 when the SW2-1 (switching memory contents) on the front panel is set in the Normal position.

EEPROM Write/Read Commands

Parameter	Command		Write	Read	Loop no.	Bank no.	Actual data range	SV data range	Default value
Set point (see note 3)	0	0	Yes	Yes	Yes	Yes	Scaling lower limit to scaling upper limit		0 EU
Manual output volume (see note 6)	0	1	Yes	Yes	Yes	No	–5 to 105%	F005 to 0105	0%
Execution bank number	0	2	Yes	Yes	Yes	No	1 to 8	0001 to 0008	1
Alarm SV 1 (see notes 3, 4)	0	3	Yes	Yes	Yes	Yes	Alarm mode 1, 4, 5: 0 to 9999 Other: –999 to 9999	0000 to 9999 F999 to 9999	0 EU
Alarm SV 2 (see notes 3, 4)	0	4	Yes	Yes	Yes	Yes			0 EU
Input shift value (see note 3)	0	5	Yes	Yes	Yes	Yes	–999 to 9999	F999 to 9999	0 EU
Proportional band (see note 1)	0	6	Yes	Yes	Yes	Yes	0.0 to 999.9	0000 to 9999	10.0%FS
Integral (reset) time (see note 1)	0	7	Yes	Yes	Yes	Yes	0 to 9999 s		240 s
Derivative (rate) time (see note 1)	0	8	Yes	Yes	Yes	Yes	0 to 9999 s		40 s
Decimal point position	1	2	Yes	Yes	Yes	No	0 to 3	0000 to 0003	1
Scaling lower limit	1	3	Yes	Yes	Yes	No	–999 to (scaling upper limit value – 1 digit)		0
Scaling upper limit	1	4	Yes	Yes	Yes	No	(Scaling lower limit + 1 digit) to 9999		100.0
Control period (see note 1)	1	7	Yes	Yes	Yes	No	1 to 99 s	0001 to 0099	20 s
Hysteresis (see note 2)	1	8	Yes	Yes	Yes	Yes	0.0 to 100.0	0000 to 1000	0.2%FS
Alarm hysteresis (see note 4)	1	9	Yes	Yes	Yes	No	0.0 to 100.0	0000 to 1000	0.1%FS
Digital filter	1	E	Yes	Yes	Yes	No	0 to 100	0000 to 0100	0 s
Control output variable monitor	2	0	No	Yes	Yes	No	–5.0 to 105.0%	F050 to 1050	0.0%
Auto-tuning start/stop (see note 1)	2	1	Yes	No	Yes	No	---	AT start = 0001 AT stop = 0000	---
Copy bank	2	2	Yes	No	Yes	No	---		---
Input-type monitor	2	3	No	Yes	No	No	0 to 9	0000 to 0009	Setting for SW202
Alarm 1 mode	2	4	Yes	Yes	Yes	No	0 to 9	0000 to 0009	2
Alarm 2 mode	2	5							

Yes: Possible.
No: Not possible or not required.

Note 1. Only when advanced PID control is selected. (Switch 203-1 = OFF)

2. Only when ON/OFF control is selected. (Switch 203-1 = ON)
3. The decimal point position is designated by the “decimal point position” parameter.
4. Does not apply when Alarm Mode = 0.
5. Writing is not possible during operation (i.e., when RUN is ON).
6. Only when the output relay “MAN” bit is 1.
7. When writing to the EEPROM with the set point command “00”, set the SW203-3 to OFF.

⚠ **Caution** The PID Control Unit’s built-in EEPROM can be written to 100,000 times (service life). If more than 100,000 EEPROM write operations are performed, the memory will become corrupted. Do not use a Unit that has processed more than 100,000 EEPROM write operations.

RAM Write Commands

Parameter	Command		Write	Read	Loop no.	Bank no.	Actual data range	SV data range	Default value
Set point (see note 3)	4	0	Yes	No	Yes	Yes	Scaling lower limit to scaling upper limit		0 EU
Execution bank number	4	2	Yes	No	Yes	No	1 to 8	0001 to 0008	1
Alarm SV 1 (see notes 3, 4)	4	3	Yes	No	Yes	Yes	Alarm mode 1, 4, 5: 0 to 9999 Other: –999 to 9999	0000 to 9999 F999 to 9999	0 EU
Alarm SV 2 (see notes 3, 4)	4	4	Yes	No	Yes	Yes			0 EU
Input shift value (see note 3)	4	5	Yes	No	Yes	Yes	–999 to 9999	F999 to 9999	0 EU
Proportional band (see note 1)	4	6	Yes	No	Yes	Yes	0.0 to 999.9	0000 to 9999	10.0%FS
Integral (reset) time (see note 1)	4	7	Yes	No	Yes	Yes	0 to 9999 s		240 s
Derivative (rate) time (see note 1)	4	8	Yes	No	Yes	Yes	0 to 9999 s		40 s
Decimal point position	5	2	Yes	No	Yes	No	0 to 3	0000 to 0003	1
Scaling lower limit	5	3	Yes	No	Yes	No	–999 to (scaling upper limit value – 1 digit)		0
Scaling upper limit	5	4	Yes	No	Yes	No	(Scaling lower limit + 1 digit) to 9999		100.0
Control period (see note 1)	5	7	Yes	No	Yes	No	1 to 99 s	0001 to 0099	20 s
Hysteresis (see note 2)	5	8	Yes	No	Yes	Yes	0.0 to 100.0	0000 to 1000	0.2%FS
Alarm hysteresis (see note 4)	5	9	Yes	No	Yes	No	0.0 to 100.0	0000 to 1000	0.1%FS
Digital filter	5	E	Yes	No	Yes	No	0 to 100	0000 to 0100	0 s
Alarm 1 mode	6	4	Yes	No	Yes	No	0 to 9	0000 to 0009	2
Alarm 2 mode	6	5							

Yes: Possible.
No: Not possible or not required.

Note
1. Only when advanced PID control is selected. (Switch 203-1 = OFF)
2. Only when ON/OFF control is selected. (Switch 203-1 = ON)

3. The decimal point position is designated by the “decimal point position” parameter.
4. Does not apply when Alarm Mode = 0.
5. RAM write commands write data only to the RAM regardless of the setting of the Switch 203-3 (SP write mode).
6. Any data written using RAM write commands is deleted when the power is turned OFF.
7. RAM write commands cannot be used to read data.

4-2 Data Flow

Refer to *3-2 Data Flow* for the data flow in the PID Control Unit.

Data Settings

Before setting data with a user program or the Programming Console, turn ON SW2-2 of the Unit to enable data setting from the C200H PC. However, the executed bank number can be set with a user program or from the Programming Console regardless of the ON/OFF setting of SW2-2.

SW2-1 (switching memory contents) may be set in either the OFF (Fixed) or ON (Normal) position, but care is required as the setting of this switch changes the stored data contents.

4-3 Programming

4-3-1 Example with SW2-1 in the Fixed Position

Description and Conditions

Example:	The user program makes the following settings: Loop 1 SP = 80.0 Loop 2 SP = 90.0 Loop 1 executed bank number = 1 Loop 2 executed bank number = 3
Conditions:	C200H-PID01 Unit number set to 0 (allocated memory: IR100 to IR109). SW2-1 set OFF (Fixed) and SW2-2 set ON (C200H PC).

Sample Program

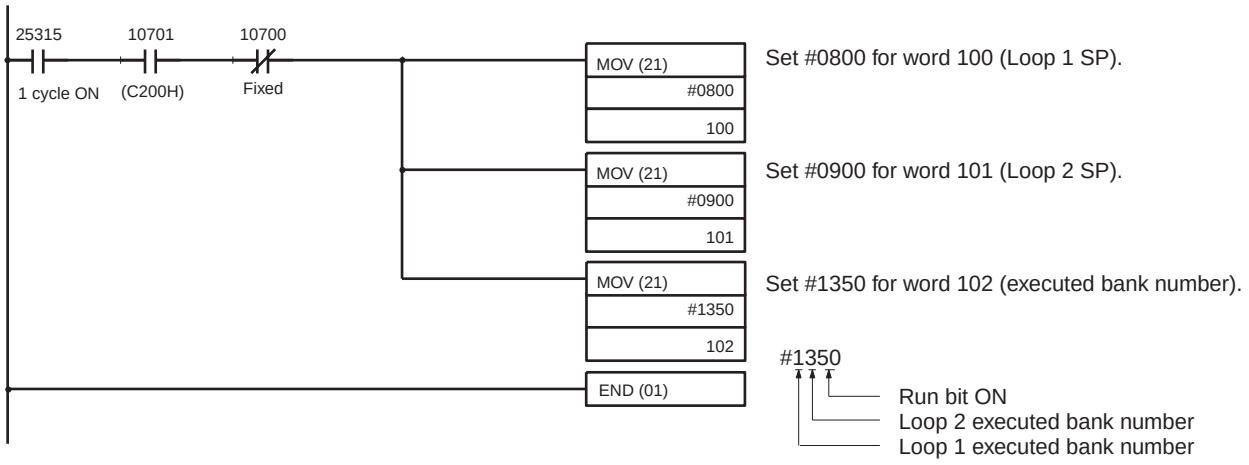

Be sure to set the correct values for the Loop 1 and Loop 2 SP.

The SV value is #0000 (0%) if no data is set. If the executed bank number is set to a value out of the range from 1 to 8 the bank number reverts to the previous value (default value = 1).

Reading Monitored Data

Read monitored data into the program using Wd (n+3) to (n+9).

4-3-2 Example 1: Write with SW2-1 in the Normal Position

Description and Conditions

Example	Before running the program, make the following parameter settings: Loop 1 SP = 20.0 (Bank no. = 1) Loop 2 SP = 8.05 (Bank no. = 2) Loop 1 executed bank number = 1; decimal point position = 1 Loop 2 executed bank number = 2; decimal point position = 2 This is an example of a program that writes data to the EEPROM. When writing to the RAM, add 4 to the leftmost digit of the command.
Conditions	C200H-PID01 Unit number set to 0 (allocated memory: IR100 to IR109). SW2-1 set ON (Normal) and SW2-2 set ON (C200H PC).

⚠ **Caution** The PID Control Unit's built-in EEPROM can be written to 100,000 times (service life). If more than 100,000 EEPROM write operations are performed, the memory will become corrupted. Do not use a Unit that has processed more than 100,000 EEPROM write operations.

Sample Program

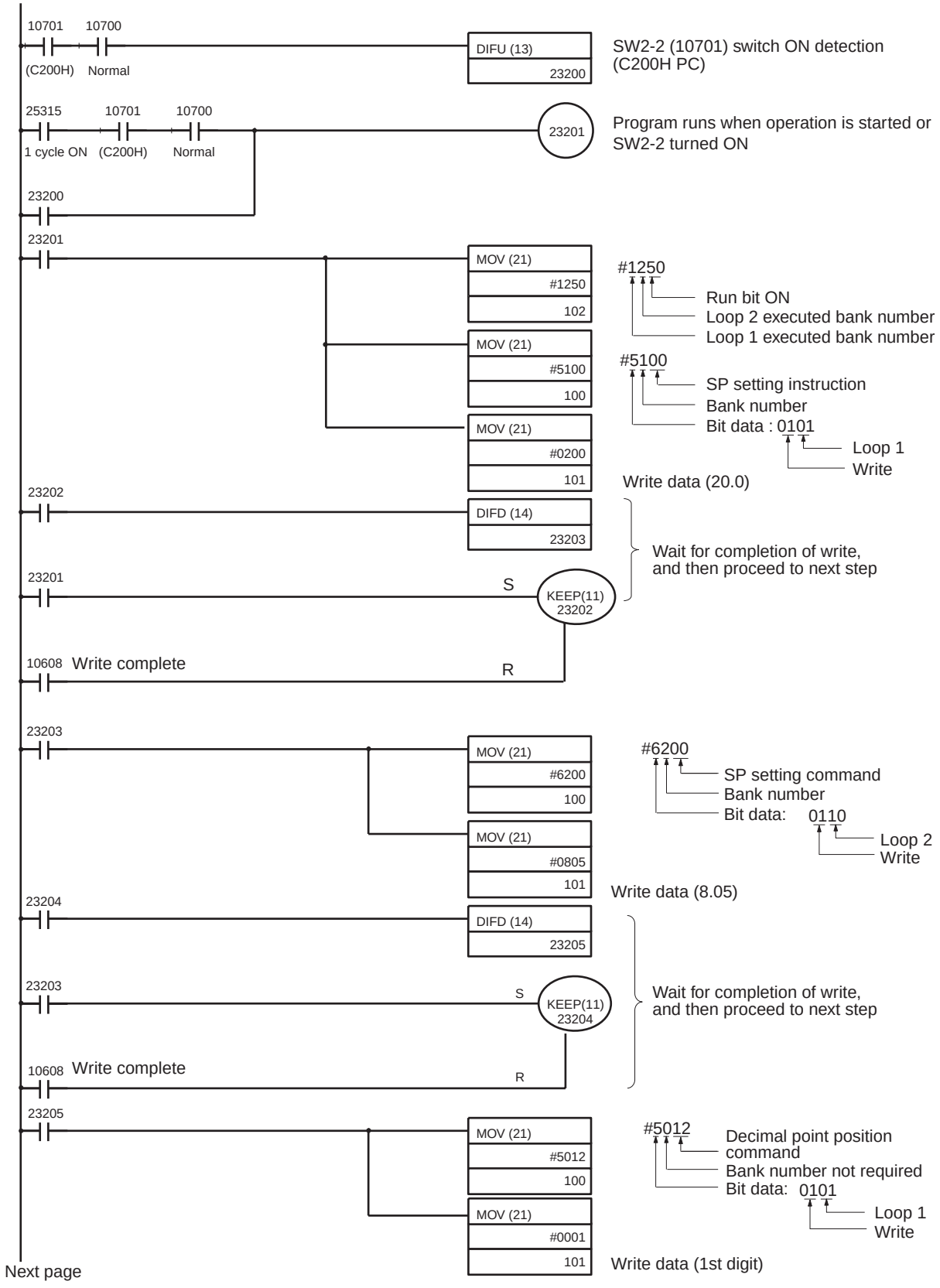

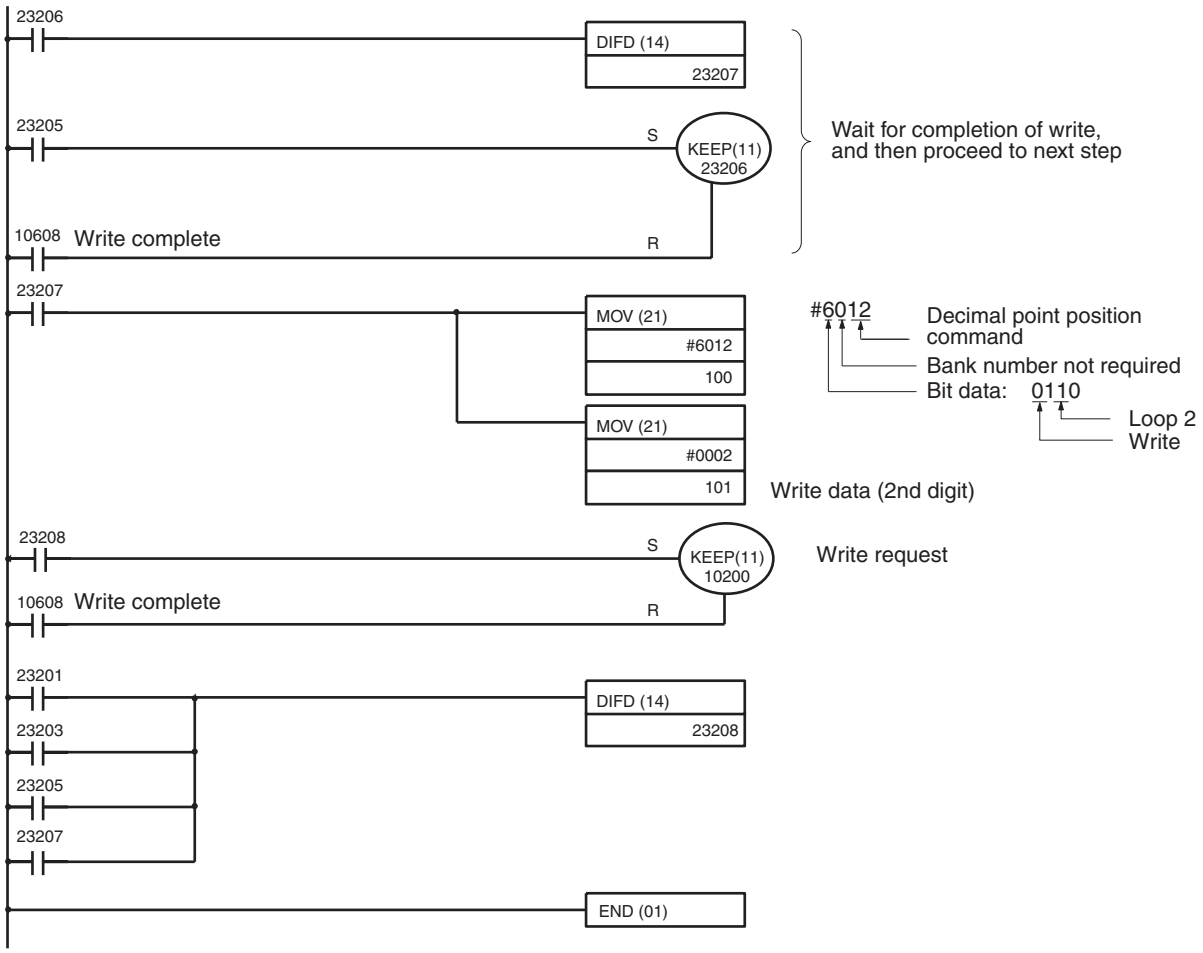
23206
DIFD (14)
23207
23205
S
KEEP(11)
23206
Wait for completion of write,
and then proceed to next step
10608
Write complete
R
23207
MOV (21)
#6012
100
#6012
Decimal point position
command
Bank number not required
Bit data: 0110
Loop 2
Write
MOV (21)
#0002
101
Write data (2nd digit)
23208
S
KEEP(11)
10200
Write request
10608
Write complete
R
23201
DIFD (14)
23208
23203
23205
23207
END (01)

Timing Chart

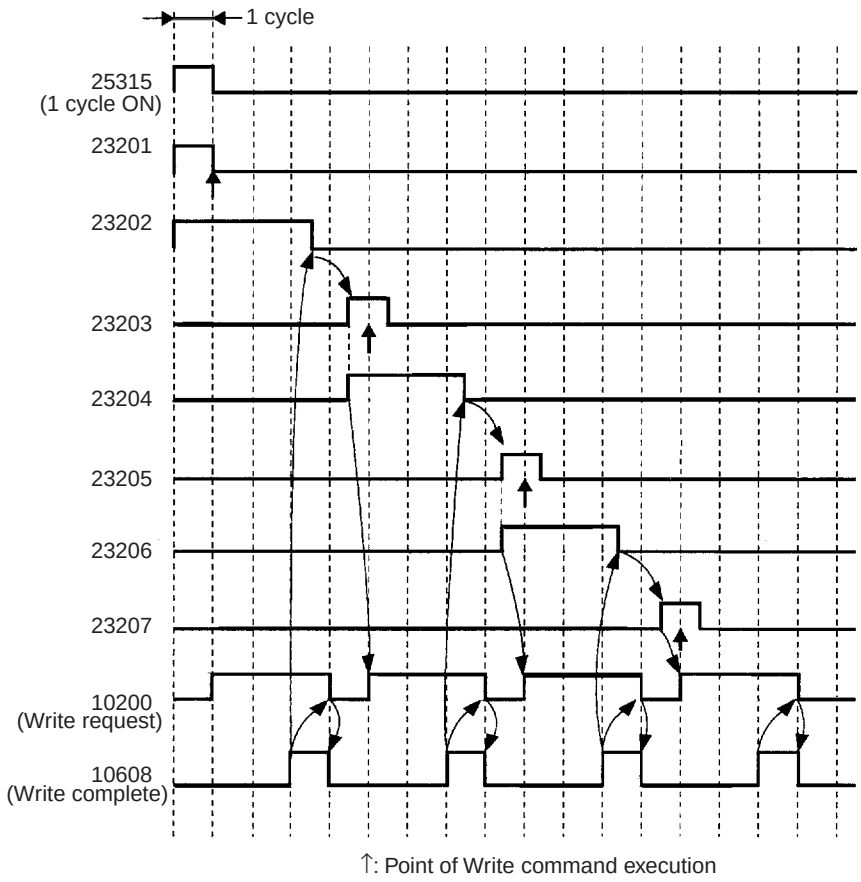

In addition to the timing above, 23201 turns ON for one cycle on the ON rising edge of SW2-2 (10701) and a write request (10200) turns ON at a timing one cycle behind 23208.

4-3-3 Example 2: Read with SW2-1 in the Normal Position

Description and Conditions

Example:	After writing is completed, the following data is read to the DM area: Loop 1 PV: →DM0000 Loop 1 control output variable: →DM0001
Conditions:	C200H-PID01 Unit number set to 0 (allocated memory: IR100 to IR109. SW2-1 set ON (Normal) and SW2-2 set ON (C200H PC).

Sample Program

Insert the program below before the END instruction in the program on page 45.

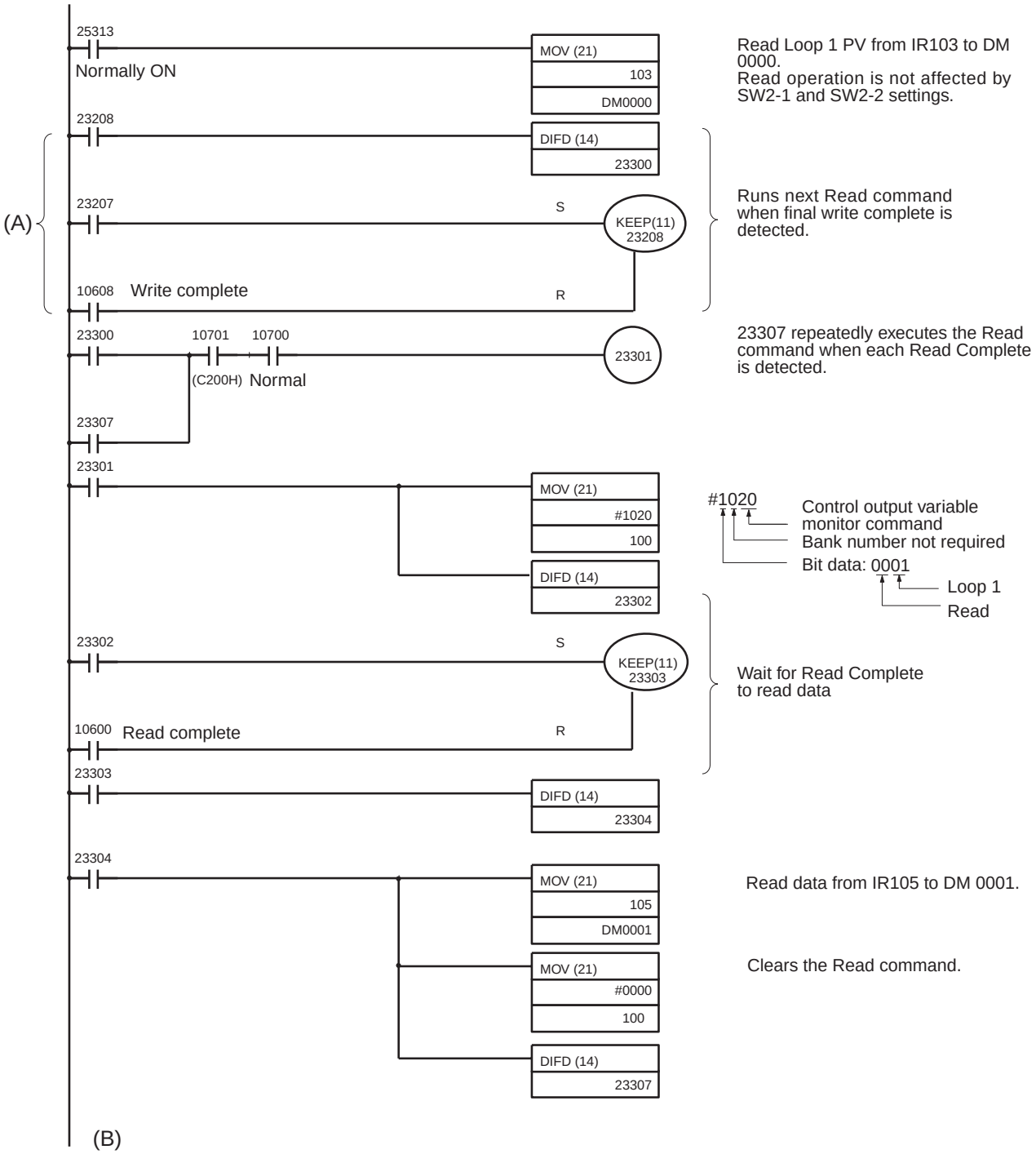

Change the above program as shown below if only reading is to be carried out.

Replace part (A) of the program with the following program.

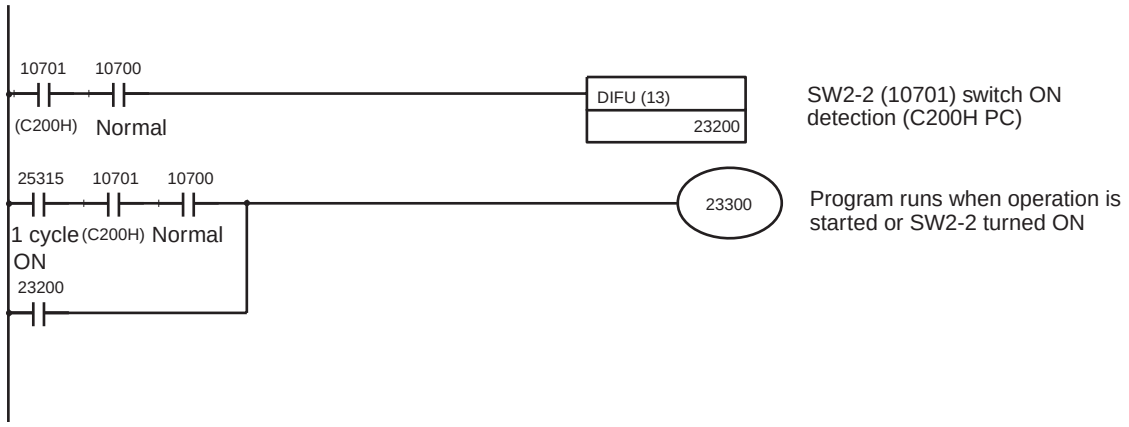

Add an END instruction (01) at position (B) of the program.

Timing Chart

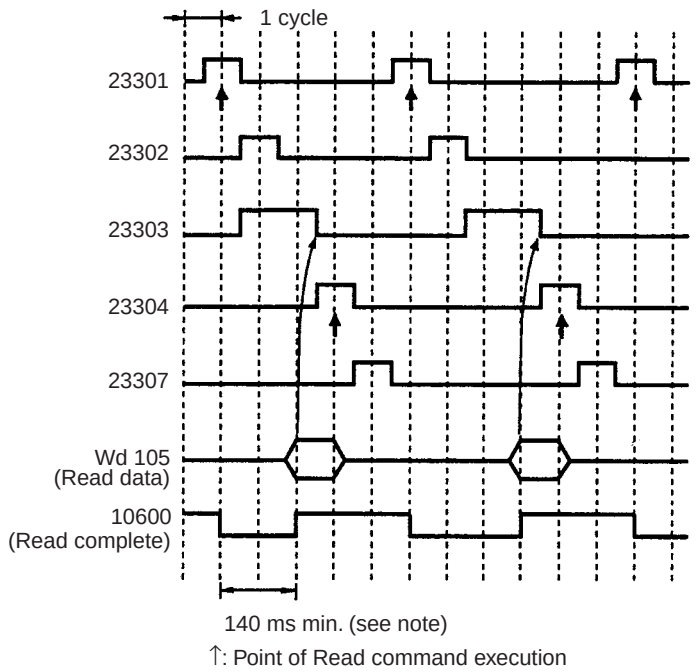

Note It takes more than 140 ms for the Read Complete Flag (10600) to turn ON again after it is turned OFF.

4-3-4 Operation Timing

Write Operation Timing

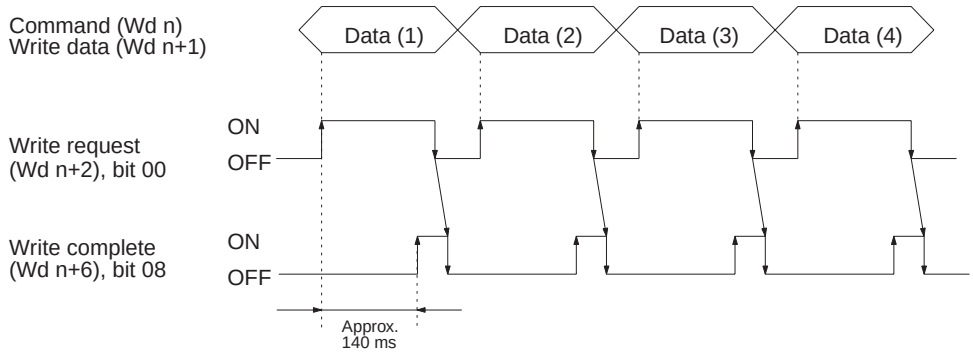

1,2,3... 1. The data is written to the PID Control Unit EEPROM when the Write Request Flag turns ON.

⚠ **Caution** The PID Control Unit's built-in EEPROM can be written to 100,000 times (service life). If more than 100,000 EEPROM write operations are performed, the memory will become corrupted. Do not use a Unit that has processed more than 100,000 EEPROM write operations.

2. The Write Complete Flag turns ON when the data writing operation is completed. It takes approximately 140 ms to write the data.
3. The Write Complete Flag automatically turns OFF when the Write Request Flag turns OFF.

   Check to be sure that the Write Complete Flag has turned ON before turning OFF the Write Request Flag. If the Write Request Flag is set to OFF before the Write Complete Flag turns ON, the write operation will not be successful.

   Temporarily turn the Write Request Flag OFF before executing the second and subsequent write operations. Writing is enabled on the ON rising edge of the Write Request Flag.

   The Loop 1 and 2 executed bank number (Wd n+2) sets data directly. The data is written to the PID Control Unit RAM. If the value is set out of this range, the bank number reverts to the previous value (default value = 1).

Timing for a Read Operation

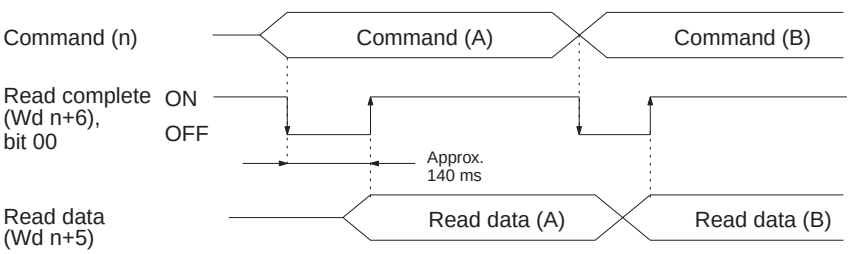

1,2,3... 1. The read data is output to Wd (n+5) approximately 140 ms after the Read command is executed.
2. The read data is updated every 100 ms.
3. When the Read command is modified, turn OFF the Read Complete Flag to execute the next read operation.

I/O Refresh

PID control will not be executed properly unless there are at least 20 ms between I/O refresh operations. When creating the program, be sure that all of the conditions descried below are satisfied.

- The cycle time must be a minimum of 20 ms. If the program processing time is short, it is recommended that the fixed cycle time instruction (SCAN18) be used.
- When IORF(97) is executed for the PID Control Unit, there must be an interval of at least 20 ms between prior and subsequent end refreshes.
- The time interval for executing IORF(97) must be a minimum of 20 ms.

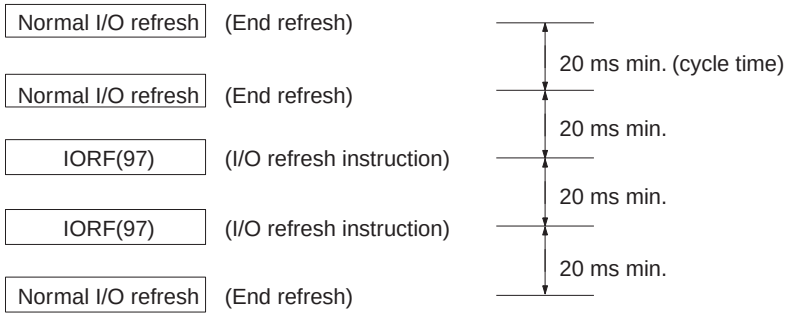

SECTION 5
Troubleshooting

This section describes possible errors and provides measures for dealing with them.

Error Detection 52

Error Detection

When an error occurs in an input or in the Unit, details of the error are output to the Data Setting Console and input relays (words n+8 and n+9).

Sensor Input Errors

The following table shows the Data Setting Console display and error contents.

Display	Error name	Output status after error	Cause	Remedy
SEr 1	Loop 1 sensor error	Control output: The transistor output or voltage output turns OFF or the current output falls below 2 mA. Alarm output: The alarm is output assuming the input is ±10%FS.	Reading is ±10%FS out of sensor measurement range (i.e., 10%FS below the lower limit or 10%FS above the upper limit). Broken or incorrect input wiring Defective input sensor Defective Unit SW203-4 is OFF (Loop 2 enabled) but no sensor connected to Loop 2.	Check the sensor wiring. Replace the sensor. Replace the Unit. Correctly set switch SW203-4.
SEr2	Loop 2 sensor error			

Data Setting Console

When a sensor error occurs, one of the codes above and the detected value are displayed alternately.

If a Loop 1 sensor error SEr 1 and a Loop 2 sensor error SEr2 occur simultaneously, SEr 1 is displayed preferentially. Even if a sensor error is detected in one Loop, the other Loop continues to operate normally. Control operation restarts automatically five seconds after the cause of the error is corrected.

The following bits are set when a sensor input error occurs.

Loop 1 sensor error	Wd. n+8, bit 14 = 1
Loop 2 sensor error	Wd. n+9, bit 14 = 1

Alarm

Display	Error name	Cause	Remedy
ALM1 indicator lit	Alarm 1	The value is in the alarm range set with Alarm SV 1.	Check the object being controlled.
ALM2 indicator lit	Alarm 2	The value is in the alarm range set with Alarm SV 2.	

Error displayed when an abnormality occurs in the loop currently being displayed. No indicator is provided to show an ALM2 alarm.

The bits shown in the table below are set to 1 when an alarm occurs.

Wd (n+8)	Bit 01 = 1	Alarm 1	Loop 1
	Bit 00 = 1	Alarm 2	
Wd (n+9)	Bit 01 = 1	Alarm 1	Loop 2
	Bit 00 = 1	Alarm 2	

EEPROM Error

Display	Error name	Output status after error	Cause	Remedy
E111	EEPROM error	Control output: The transistor output or voltage output is OFF or the current output is less than 2 mA. Alarm output is OFF.	Defective EEPROM	Replace the Unit

The RUN indicator turns off when an EEPROM error occurs.

Duplicate I/O Unit

The Unit number duplicates the number of another Special I/O Unit. The SR bit 25415 turns ON when an Duplicate I/O Unit error occurs. Refer to AR0000 to AR0011 for the duplicated Unit number. The C200H PC will not operate during a duplicate I/O error.

Set the Unit number to a separate number.

Special I/O Unit Error

I/O refresh not operating correctly between the CPU Unit and PID Unit. The PID Control Unit is operating based on the contents of the previous refresh. Refer to AR0000 to AR0015 for the Unit number where the error occurred. After correcting the cause of the error, set the Special I/O Unit Restart Flag (AR0100 to AR0109) to restart operation.

RUN Indicator Unlit

The C200H power supply is turned on but the RUN indicator is not lit. None of the errors described previously are detected. Replace the Unit.

No Data Setting Console Display

- No 24-VDC power supply is connected to the PID Control Unit input terminals A8 and A9.
- The connecting cable is disconnected.
- The connecting cable is broken.
- A circuit in the Data Setting Console is defective.
- A circuit in the PID Control Unit is defective.

After determining the cause of the error, correct the problem or replace the Unit.

Appendix A
Specifications

General Specifications

Conforms to the C200H PC specifications.

Item	C200H-PID0□ Specifications
Input signal refresh	4 to 20 mA, 1 to 5 V, 0 to 5 V, 0 to 10 V
No. of input points (loops)	Two points (two loops, each of which consists of a voltage and a current)
Control mode	PID, ON/OFF (selectable with a switch on the rear panel) (advanced PID control with auto-tuning)
Setting/designation accuracy	±0.5% FS ±1 digit max. The SV and displayed value match. There is no relative error.
Hysteresis	0.0 to 100.0% FS (in units of 0.1%FS)
Alarm hysteresis	0.0 to 100.0% FS (in units of 0.1%FS)
Proportional band	0.0 to 999.9 (in units of 0.1)
Integral (reset) time	0 to 9999 s (in units of 1 s)
Derivative (rate) time	0 to 9999 s (in units of 1 s)
Control period	1 to 99 s (in units of 1 s)
Sampling period	100 ms
Output refresh period	100 ms
Display refresh period	100 ms
Input shift range	–999 to 9999 (see note 1)
Scaling setting range	–999 to 9999 (see note1)
Digital filter setting range	0 to 100 s (in units of 1 s)
Alarm output setting range	–999 to 9,999
Manual output setting range	–5 to 105%
No. of banks	8 banks
Internal current consumption	5 VDC, 0.33 A max.
External supply voltage	24 VDC $^{+10\%}/_{-15\%}$, 0.2 A min.
Dimensions (see note 2)	34.5 mm (W) x 130 mm (H) x 120.5 mm (D)
Weight	360 g

Note 1. The decimal point position is designated by a parameter setting.

2. Refer to *Appendix B Dimensions.*

Output Characteristics

Transistor Output (Pulse) C200H-PID01

External supply voltage	24 VDC $^{+10\%}/_{-15\%}$
Max. load voltage	24 VDC (collector supplied voltage) max.
Max. load current	100 mA max.
Residual voltage when ON	3 V max.
Leakage current when OFF	0.3 mA max.

Voltage Output (Pulse) C200H-PID02

Output voltage	12 VDC
Max. load current	40 mA (with short-protective circuit)

Current Output (Linear) C200H-PID03

Output current	4 to 20 mA
Permissible load impedance	600 Ω max.
Current value accuracy	4±0.3 to 20±1 mA

Appendix B

Dimensions

PID Control Unit

Weight: 360 g

Unit Dimensions

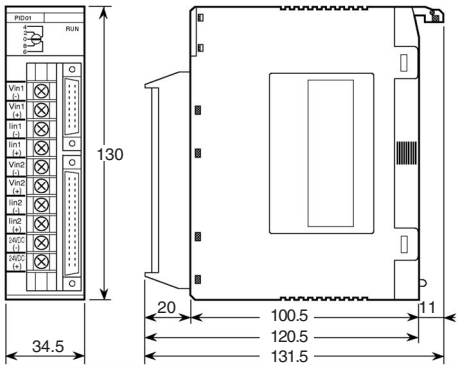

Mounting Dimensions

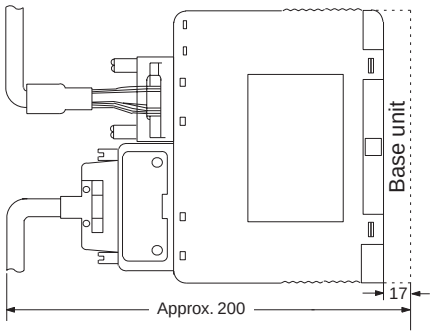

Data Setting Console

Weight: 120 g

Unit Dimensions

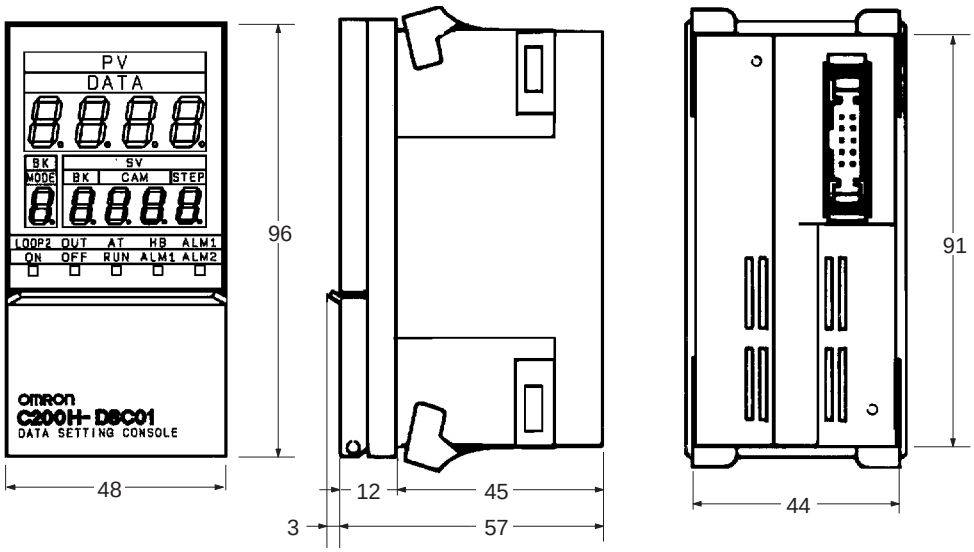

Mounting Dimensions

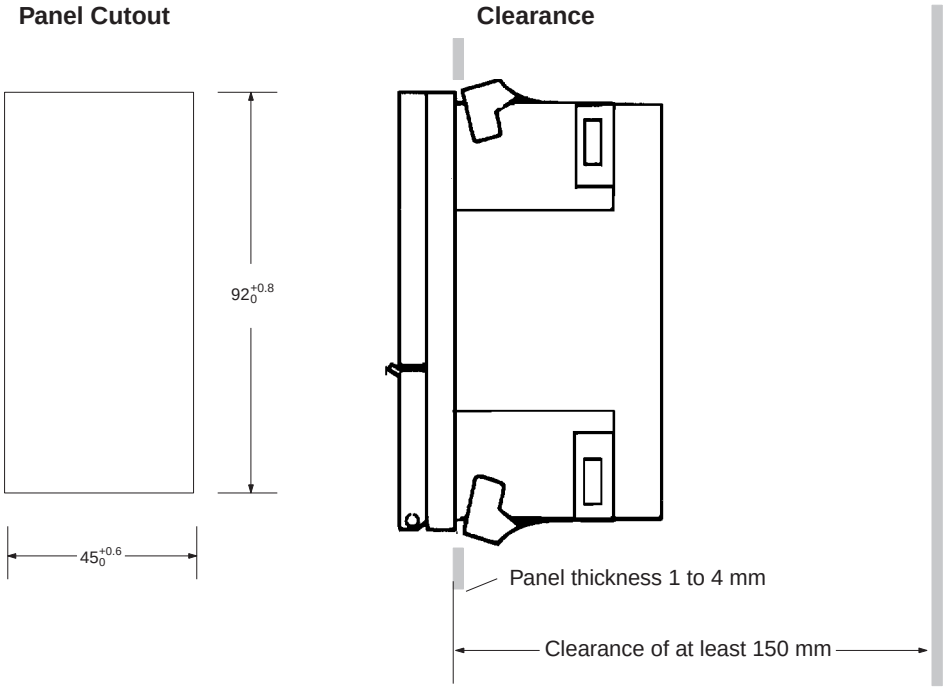

Allow a clearance of at least 150 mm behind the Data Setting Console when it is installed in the panel to allow cable connectors to be inserted. A clearance of 50 mm is sufficient if the rear panel can be opened.

Appendix C

Parameters and Key Operations

The Data Setting Console key operations and their relation to parameters are shown in the following table.

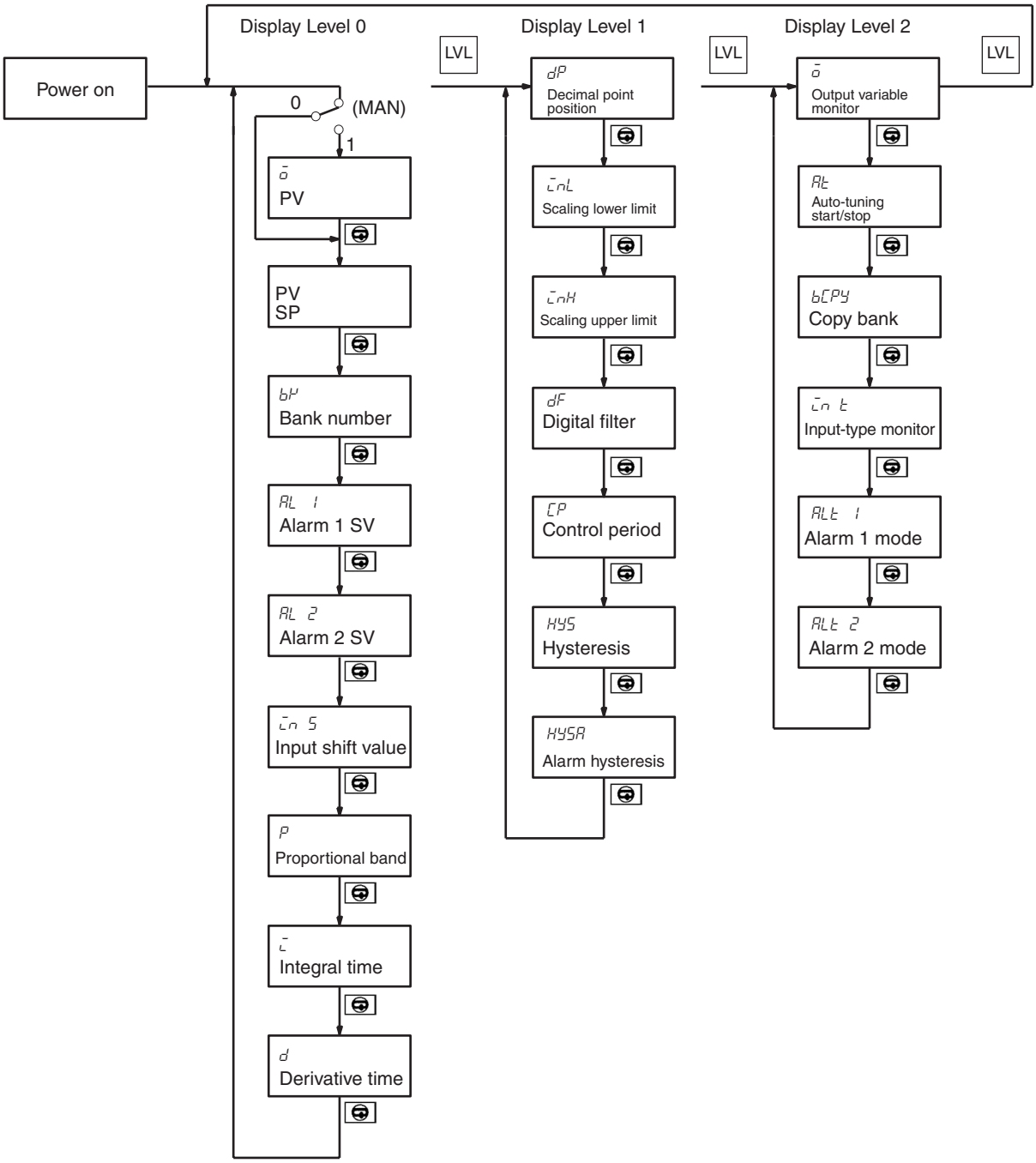

Index

A–B

advanced PID control, 2
alarm indicators, 52
allocating memory, 34
applications
  precautions, xiii
auto-tuning start/stop setting, 30
bank number setting, 26

C

command codes
  settings, 40
Connector Terminal Block Converter Unit, 16
control output variable monitor setting, 30
control period setting, 29
cover
  removal and replacement, 9

D

data flow, 21
data setting, 21
  operating procedure, 20
Data Setting Console
  connecting cable and precautions, 17
  features, 23
  mounting, 58
  parameter and setting tables, 24
  physical features, 22
data settings, 42
decimal point position, 28
derivative time setting, 27
detecting errors, 52
Duplicate I/O Unit, 53
EEPROM error alarm, 52

E–F

error display, 26
errors
  data setting, 52
features, 2

I

indicators, 8
input shift value setting, 27
input wiring
  precautions, 12
installation
  precautions, xiii
integral time setting, 27
memory contents, 36

M–O

operating environment
  precautions, xiii
Operation and Function Setting, 10
operation timing, 49
output wiring, 13
  circuit diagrams, 14
  connectors and cable, 15
  diagrams, 15
  precautions, 15

P–R

precautions, 4
  applications, xiii
  general, xii
  operating environment, xiii
  safety, xii
programming
  examples, 42, 46
proportional band setting, 27
read operation timing, 49
Remote I/O Terminal, 16

S

safety precautions
  See also precautions
selecting allocated memory, 34
sensors
  setting type, 10
sensor-type setting, 30
setting and displaying parameters
  method, 25
settings

source, 10
Slave Rack
number of mountable Units, 4
Special I/O Unit error, 53
specifications
general, table, 55
switch settings, 8, 9
switching memory contents, 10
switching memory contents and setting direction, 9
system configuration, 3

T–U

troubleshooting
alarm, 52
data setting errors, 52
duplicate I/O unit, 53
EEPROM error, 52
power supply, 53
RUN Indicator Unlit, 53
Special I/O Unit error, 53
Unit
models, 3
Unit components
dimensions, 57

Revision History

A manual revision code appears as a suffix to the catalog number on the front cover of the manual.

Cat. No. W241-E1-03

Revision code

The following table outlines the changes made to the manual during each revision. Page numbers refer to the previous version.

Revision code	Date	Revised content
1	November 1993	Original production
1A	March 1995	**Page 38:** Auto-tuning start/stop in the table corrected. **Page 44:** Sample program corrected.
2	March 2000	Added *PRECAUTIONS* section. **Page 4:** Added descriptions about RAM write commands. **Page 9:** Added the use of RAM write commands in the SP write mode. **Page 11:** Changed descriptions about the terminal block connections. **Page 19:** Changed descriptions about the data flow to include information about EEPROM write commands and RAM write commands. **Page 39:** Added the RAM write commands table. **Page 39:** Changed some values in the sample program. **Page 40:** Added comments about EEPROM write commands and RAM write commands in the sections on descriptions and conditions. **Page 42:** Changed the sample program. **Page 43:** Changed the information at the end of timing chart. **Page 44:** Changed the sample program. **Page 45:** Changed the timing chart.
03	August 2003	**Page xiii**: Added precautions on cycle time and writing to EEPROM, and changed application precaution on mounting units to include Power Supply Units. **Page 4:** Added caution on writing to EEPROM. **Page 11:** Added information regarding SP Write Mode. **Pages 21, 41, and 42:** Added caution on writing to EEPROM. **Page 46:** Added information to the diagram on the Read command. **Page 48:** Added caution on writing to EEPROM.

OMRON CORPORATION
FA Systems Division H.Q.
66 Matsumoto
Mishima-city, Shizuoka 411-8511
Japan
Tel: (81)55-977-9181/Fax: (81)55-977-9045

Regional Headquarters

OMRON EUROPE B.V.
Wegalaan 67-69, NL-2132 JD Hoofddorp
The Netherlands
Tel: (31)2356-81-300/Fax: (31)2356-81-388

OMRON ELECTRONICS LLC
1 East Commerce Drive, Schaumburg, IL 60173
U.S.A.
Tel: (1)847-843-7900/Fax: (1)847-843-8568

OMRON ASIA PACIFIC PTE. LTD.
83 Clemenceau Avenue,
#11-01, UE Square,
Singapore 239920
Tel: (65)6835-3011/Fax: (65)6835-2711

OMRON

Authorized Distributor:

Cat. No. W241-E1-03

Note: Specifications subject to change without notice.

Printed in Japan

Cat. No. W241-E1-03 C200H-PID0□ PID Control Unit OPERATION MANUAL OMRON