Cat. No. W334-E1-04

SYSMAC

C200HW-NC113/NC213/NC413

Position Control Units

OPERATION MANUAL

OMRON

C200HW-NC113/NC213/NC413 Position Control Units

Operation Manual

Revised July 2003

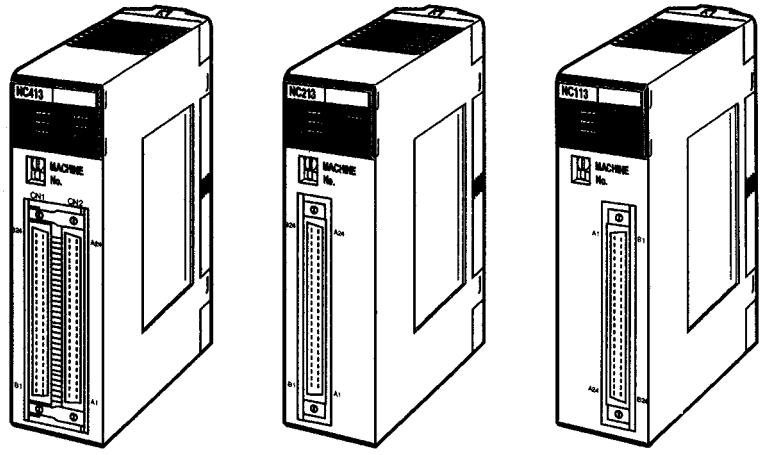

Notice:

OMRON products are manufactured for use according to proper procedures by a qualified operator and only for the purposes described in this manual.

The following conventions are used to indicate and classify precautions in this manual. Always heed the information provided with them. Failure to heed precautions can result in injury to people or damage to property.

⚠ DANGER Indicates an imminently hazardous situation which, if not avoided, will result in death or serious injury.

⚠ WARNING Indicates a potentially hazardous situation which, if not avoided, could result in death or serious injury.

⚠ Caution Indicates a potentially hazardous situation which, if not avoided, may result in minor or moderate injury, or property damage.

OMRON Product References

All OMRON products are capitalized in this manual. The word “Unit” is also capitalized when it refers to an OMRON product, regardless of whether or not it appears in the proper name of the product.

The abbreviation “Ch,” which appears in some displays and on some OMRON products, often means “word” and is abbreviated “Wd” in documentation in this sense.

The abbreviation “PC” means Programmable Controller and is not used as an abbreviation for anything else.

Visual Aids

The following headings appear in the left column of the manual to help you locate different types of information.

Note Indicates information of particular interest for efficient and convenient operation of the product.

1, 2, 3... 1. Indicates lists of one sort or another, such as procedures, checklists, etc.

© OMRON, 1997

All rights reserved. No part of this publication may be reproduced, stored in a retrieval system, or transmitted, in any form, or by any means, mechanical, electronic, photocopying, recording, or otherwise, without the prior written permission of OMRON.

No patent liability is assumed with respect to the use of the information contained herein. Moreover, because OMRON is constantly striving to improve its high-quality products, the information contained in this manual is subject to change without notice. Every precaution has been taken in the preparation of this manual. Nevertheless, OMRON assumes no responsibility for errors or omissions. Neither is any liability assumed for damages resulting from the use of the information contained in this publication.

TABLE OF CONTENTS

PRECAUTIONS xiii

1 Intended Audience xiv
2 General Precautions xiv
3 Safety Precautions xiv
4 Operating Environment Precautions xv
5 Application Precautions xv

SECTION 1 Introduction 1

1-1 Features 2
1-2 System Configuration 4
1-3 Basic Operations 7
1-4 Control System Principles 11
1-5 Exchanging Data 13
1-6 Before Operation 15

SECTION 2 Specifications and Wiring 17

2-1 Specifications 18
2-2 Components 21
2-3 External I/O Circuitry 24
2-4 Connecting External I/O 30
2-5 Connections in Each Operating Mode 37
2-6 Connection of Unused Axes 45
2-7 Servo Relay Unit 45

SECTION 3 Getting Started 47

3-1 Basic Operations 48
3-2 System Configuration and Wiring 49
3-3 Setting Data and Starting 51

SECTION 4 Data Areas 53

4-1 Overall Structure 54
4-2 Common Parameters 74
4-3 Axis Parameters 76
4-4 Operating Memory Area 83
4-5 Operating Data Area 89
4-6 Positioning Sequence Details 89
4-7 Setting Data With the SYSMAC-NCT Support Tool 93
4-8 Setting Data for Unused Axes 93

SECTION 5 Transferring and Saving Data 95

5-1 Transferring and Saving Data 96
5-2 Writing Data with the WRITE DATA Bit 99
5-3 Reading Data with the READ DATA Bit 103
5-4 Writing Data with IOWR 107
5-5 Reading Data with IORD 110
5-6 Creating and Transferring Data with the Support Tool 113
5-7 Saving Data 114

TABLE OF CONTENTS

SECTION 6
Defining the Origin 117

6-1 Setting the Data for an Origin Search 118
6-2 Executing Origin Search 119
6-3 Origin Search Timing Charts 130
6-4 Origin Return 134

SECTION 7
Direct Operation 137

7-1 Outline 138
7-2 Setting Data for Use With Direct Operation 140
7-3 Operations With Direct Operation 141
7-4 Procedures for Setting Data for Direct Operation 143
7-5 Direct Operation Timing Charts 144
7-6 Sample Program 146

SECTION 8
Memory Operation 149

8-1 Outline 150
8-2 Setting Data for Use in Memory Operation 154
8-3 Operations With Memory Operation 155
8-4 Procedures for Setting Data for Memory Operation 162
8-5 Timing Chart for Memory Operation 162
8-6 Sample Program 165

SECTION 9
Other Operations 169

9-1 Jogging 170
9-2 Teaching 171
9-3 Interrupt Feeding 173
9-4 Forced Interrupt 175
9-5 Deceleration Stop 177
9-6 Changing the Present Position 180
9-7 Override 181
9-8 Releasing Pulse Output Prohibition 182
9-9 Error Counter Reset Output and Origin Adjustment Command Output 184
9-10 Backlash Compensation 187

SECTION 10
Program Examples 189

10-1 Operating Procedures for Program Examples 190
10-2 Memory Operation 192
10-3 Direct Operation 206
10-4 Linear Interpolation 211
10-5 Origin Search 216
10-6 Override 218
10-7 Transferring and Saving Data 221

SECTION 11
Troubleshooting 227

11-1 Introduction 228
11-2 LED Error Indicators 230
11-3 Reading Error Codes 231
11-4 Error Code Lists 232
11-5 CPU Error Indicators 243

TABLE OF CONTENTS

Appendices

A Data Calculation Standards 245
B Estimating Times and Pulses for Acceleration/Deceleration 251
C Error Code List 253
D Effect of Cable Length on Pulse Output 257
E Parameter Coding Sheets 259
F Using with CS1-series PCs 263

Index 271

Revision History 277

About this Manual:

This manual describes the operation of the C200HW-NC113/NC213/NC413 Position Control Units and includes the sections described below.

Please read this manual carefully and be sure you understand the information provided before attempting to install and operate the C200HW-NC113/NC213/NC413 Position Control Units.

Section 1 introduces the features of the Position Control Unit and explains the system configuration in which it is used.

Section 2 provides the Position Control Unit's specifications and explains the wiring.

Section 3 explains how to use the RELATIVE MOVEMENT command employing the direct operation method, and provides examples of how to use a stepping motor.

Section 4 provides information on the data areas used by the Position Control Unit.

Section 5 explains how to transfer and save parameters and data.

Section 6 explains the origin search and origin return operations.

Section 7 provides an outline of direct operation, details about data areas and how to set data, and sample programs.

Section 8 provides an outline of memory operation, details about data areas and how to set data, and sample programs.

Section 9 describes the following operations: jogging, teaching, interrupt feeding, forced interrupt, deceleration stop, changing the present position, override, releasing pulse output prohibition, deviation counter reset output/origin-adjustment command output, and backlash compensation.

Section 10 provides examples of programs for using the Position Control Unit.

Section 11 describes how to diagnose and correct errors that can occur during operation.

The ***Appendices*** provide data calculation standards, information on estimating times and pulses for acceleration/deceleration, error code list, information on the effect of cable length on pulse output, and parameter coding sheets.

⚠WARNING Failure to read and understand the information provided in this manual may result in personal injury or death, damage to the product, or product failure. Please read each section in its entirety and be sure you understand the information provided in the section and related sections before attempting any of the procedures or operations given.

PRECAUTIONS

This section provides general precautions for using the Programmable Controller (PC), Position Control Unit (PCU), and related devices.

The information contained in this section is important for the safe and reliable application of the Programmable Controller and the Position Control Unit. You must read this section and understand the information contained before attempting to set up or operate a PC system.

1 Intended Audience xiv
2 General Precautions xiv
3 Safety Precautions xiv
4 Operating Environment Precautions xv
5 Application Precautions xv

1 Intended Audience

This manual is intended for the following personnel, who must also have knowledge of electrical systems (an electrical engineer or the equivalent).

- Personnel in charge of installing FA systems.
- Personnel in charge of designing FA systems.
- Personnel in charge of managing FA systems and facilities.

2 General Precautions

The user must operate the product according to the performance specifications described in the operation manuals.

Before using the product under conditions which are not described in the manual or applying the product to nuclear control systems, railroad systems, aviation systems, vehicles, combustion systems, medical equipment, amusement machines, safety equipment, and other systems, machines, and equipment that may have a serious influence on lives and property if used improperly, consult your OMRON representative.

Make sure that the ratings and performance characteristics of the product are sufficient for the systems, machines, and equipment, and be sure to provide the systems, machines, and equipment with double safety mechanisms.

This manual provides information for programming and operating Position Control Unit. Be sure to read this manual before attempting to use the PCU and keep this manual close at hand for reference during operation.

3 Safety Precautions

⚠ WARNING Never attempt to disassemble any Units while power is being supplied. Doing so may result in serious electrical shock or electrocution.

⚠ WARNING Never touch any of the terminals while power is being supplied. Doing so may result in serious electrical shock or electrocution.

⚠ WARNING Provide safety measures in external circuits (i.e., not in the Programmable Controller), including the following items, to ensure safety in the system if an abnormality occurs due to malfunction of the PC or another external factor affecting the PC operation. Not doing so may result in serious accidents.

- Emergency stop circuits, interlock circuits, limit circuits, and similar safety measures must be provided in external control circuits.
- The PC will turn OFF all outputs when its self-diagnosis function detects any error or when a severe failure alarm (FALS) instruction is executed. As a countermeasure for such errors, external safety measures must be provided to ensure safety in the system.
- The PC outputs may remain ON or OFF due to deposits on or burning of the output relays, or destruction of the output transistors. As a countermeasure for such problems, external safety measures must be provided to ensure safety in the system.
- When the 24-V DC output (service power supply to the PC) is overloaded or short-circuited, the voltage may drop and result in the outputs being turned OFF. As a countermeasure for such problems, external safety measures must be provided to ensure safety in the system.

⚠ Caution Tighten the screws on the terminal block on the AC Power Supply Unit to the torque specified in the C200H, C200HS, or C200HX/HG/HE-(Z)E installation guide. Loose screws may result in short-circuits, malfunction, or burning.

⚠ **Caution** Confirm safety at the destination node before transferring a program to another node or editing the I/O area. Doing either of these without confirming safety may result in injury.

4 Operating Environment Precautions

Do not operate the control system in the following places.

- Locations subject to direct sunlight.
- Locations subject to temperatures or humidity outside the range specified in the specifications.
- Locations subject to condensation as the result of severe changes in temperature.
- Locations subject to corrosive or flammable gases.
- Locations subject to dust (especially iron dust) or salts.
- Locations subject to shock or vibration.
- Locations subject to exposure to water, oil, or chemicals.
- Take appropriate and sufficient countermeasures when installing systems in the following locations.
  - Locations subject to static electricity or other forms of noise.
  - Locations subject to strong electric fields or magnetic fields.
  - Locations subject to possible exposure to radioactivity.
  - Locations close to power supplies.

5 Application Precautions

Observe the following precautions when using the Position Control Unit (PCU) and Programmable Controller (PC).

⚠ **WARNING** Failure to abide by the following precautions could lead to serious or possibly fatal injury. Always heed these precautions.

- Always ground the system to 100 Ω or less when installing the system to protect against electrical shock.
- Always turn off the power supply to the PC before attempting any of the following:
  - Mounting or dismounting the Power Supply Unit, I/O Units, CPU Unit, other Units, or Memory Casettes.
  - Assembling the devices.
  - Setting DIP switches or rotary switches.
  - Wiring or connecting cables.
  - Connecting or disconnecting the connectors.

⚠ **Caution** Failure to abide by the following precautions could lead to faulty operation of the PC or the system or could damage the PC or PC Units. Always heed these precautions.

- Fail-safe measures must be taken by the customer to ensure safety in the event of incorrect, missing, or abnormal signals caused by broken signal lines, momentary power interruptions, or other causes.
- Interlock circuits, limit circuits, and similar safety measures must be provided by the customer as external circuits.
- Install external breakers and take other safety measures against short-circuiting in external wiring.

- Tighten the PC mounting screws, terminal block screws, and cable screws to the torque specified in this manuals.
- Always use the power supply voltage specified in this manual.
- Take appropriate measures to ensure that the specified power with the rated voltage and frequency is supplied. Be particularly careful in places where the power supply is unstable.
- Use crimp terminals for wiring. Do not connect bare stranded wires directly to terminals.
- Leave the dustproof labels affixed to the top of the Unit when wiring. After wiring, remove the labels for proper heat radiation.
- Do not apply voltages to the Input Units in excess of the rated input voltage.
- Do not apply voltages or connect loads to the Output Units in excess of the maximum switching capacity.
- Check the user program for proper execution before actually running it in the Unit.
- Be sure that the terminal blocks, memory units, extension cables, and other items with locking devices are properly locked.
- Double-check all the wiring before turning on the power supply.
- Disconnect the functional ground terminal when performing withstand voltage tests.
- Confirm that no adverse effect will occur in the system before performing the following operations:
    - Changing the operating mode of the PC.
    - Force-setting/resetting the relay contacts.
    - Changing the present values or set values.
    - Changing positioning data or parameters.
- Resume operation only after transferring to the new CPU Unit the contents of the DM and HR Areas required for operation.
- Do not attempt to disassemble, repair, or modify any Units.
- Do not pull on or bend the cables beyond their natural limit. Doing so may break the cables.
- Do not place heavy objects on top of the cables. Doing so may break the cables.
- Resume operation only after saving in the Position Control Unit the parameters and position data required for resuming operation.
- Be sure that the set parameters and data operate properly.
- Be sure to check the pin numbers before wiring the connectors.

SECTION 1
Introduction

This section introduces the features of the Position Control Unit and explains the system configuration in which it is used.

1-1 Features 2
1-2 System Configuration 4
1-3 Basic Operations 7
1-3-1 Position Control 7
1-3-2 Speed Control 8
1-3-3 Other Operations 8
1-4 Control System Principles 11
1-4-1 Data Flow 11
1-4-2 Control System Principles 12
1-4-3 Basic Positioning System Design 12
1-5 Exchanging Data 13
1-5-1 Explanation 14
1-6 Before Operation 15

1-1 Features

Position Control Unit

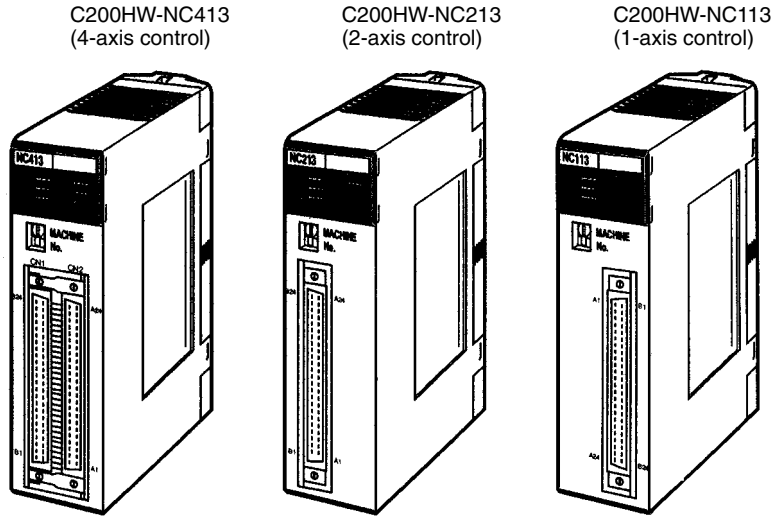

These Position Control Units are C200HX/HG/HE-series and C200H/HS-series Special I/O Units. The Units receive instructions from the Programmable Controller's IR area and output pulse trains to various motor drivers for positioning.

Functions

Motor Driver Selectable by Axis Unit

The operating mode can be set by axis unit, so it is possible to select the motor driver by axis unit. The Position Control Unit outputs pulse trains, so it can easily be connected to the following motor drivers.

- Stepping motor driver
- Servomotor drivers with pulse input.

Number of Control Axes and Control Capacity

The Position Control Unit is available with one, two, or four control axes. With the two-axis model, the two axes can either be used together for linear interpolation or they can be operated independently. With the four-axis model, up to four axes can be used together for linear interpolation or the axes can all be operated independently.

Memory Operation and Direct Operation

There are two different control methods. The first is memory operation, in which the data required for positioning is transferred to the Position Control Unit and then specified for position control, and the second is direct operation, in which the target position and target speed are set each time from the Programmable Controller.

Interrupt Feeding

When an interrupt is input during pulse output, positioning is continued for only the specified number of pulses and then stopped.

High-speed Response

The Position Control Unit responds to instructions from the Programmable Controller within 10 ms. (This applies to the C200HW-NC113.)

Compact Size

The single-axis, two-axis, and four-axis models are all one size, so space efficiency can be maximized by using multi-axis control with the two-axis and four-axis models.

Special Support Tool (SYSMAC-NCT)

A special support tool, SYSMAC-NCT, that runs on Windows 95 can be used with C200HX/HG/HE-series Programmable Controllers. The SYSMAC-NCT Support Tool can be used for writing data created or edited at a personal computer to the PCU, for reading data from the PCU, and for saving or printing out data. It also enables the monitoring of status such as I/O and positioning sequence numbers during execution. For details on operating this Support Tool, refer to the *SYSMAC-NCT Support Tool Operation Manual*.

The SYSMAC-NCT Support Tool can only be used to access PCUs mounted on a CPU Rack or an Expansion I/O Rack. It cannot access PCUs mounted on Slave Racks. The SYSMAC-NCT Support Tool cannot be used with C200H/C200HS CPU Units.

Data Capacity and Backup

The amounts of data that can be set for memory operation are shown in the following table:

Type of data	Number of data items per axis
Positioning sequences, speeds, positions	100
Acceleration times, deceleration times	9
Dwell times	19
Zones	3

These data items are transferred to the PCU for use. Once they have been transferred to the PCU they can be saved to the PCU's flash memory, so there is no need for battery maintenance.

Note There is a limit to the service life of the flash memory. A total of up to 100,000 data saving operations can be performed.

High-speed Data Transfer

With C200HX/HG/HE-series Programmable Controllers, not only can data be transferred by means of data transfer bits and SYSMAC-NCT Support Tool, but high-speed data transfers can also be performed by means of the Intelligent I/O Write (IOWR) and Intelligent I/O Read (IORD) instructions.

1-2 System Configuration

The Position Control Unit receives control signals (CW limit, CCW limit, origin, origin proximity, emergency stop, and external interrupt input signals) from devices and a control panel, and outputs pulse trains to stepping motor drivers and servomotor drivers.

C200HW-NC413 System Configuration Example

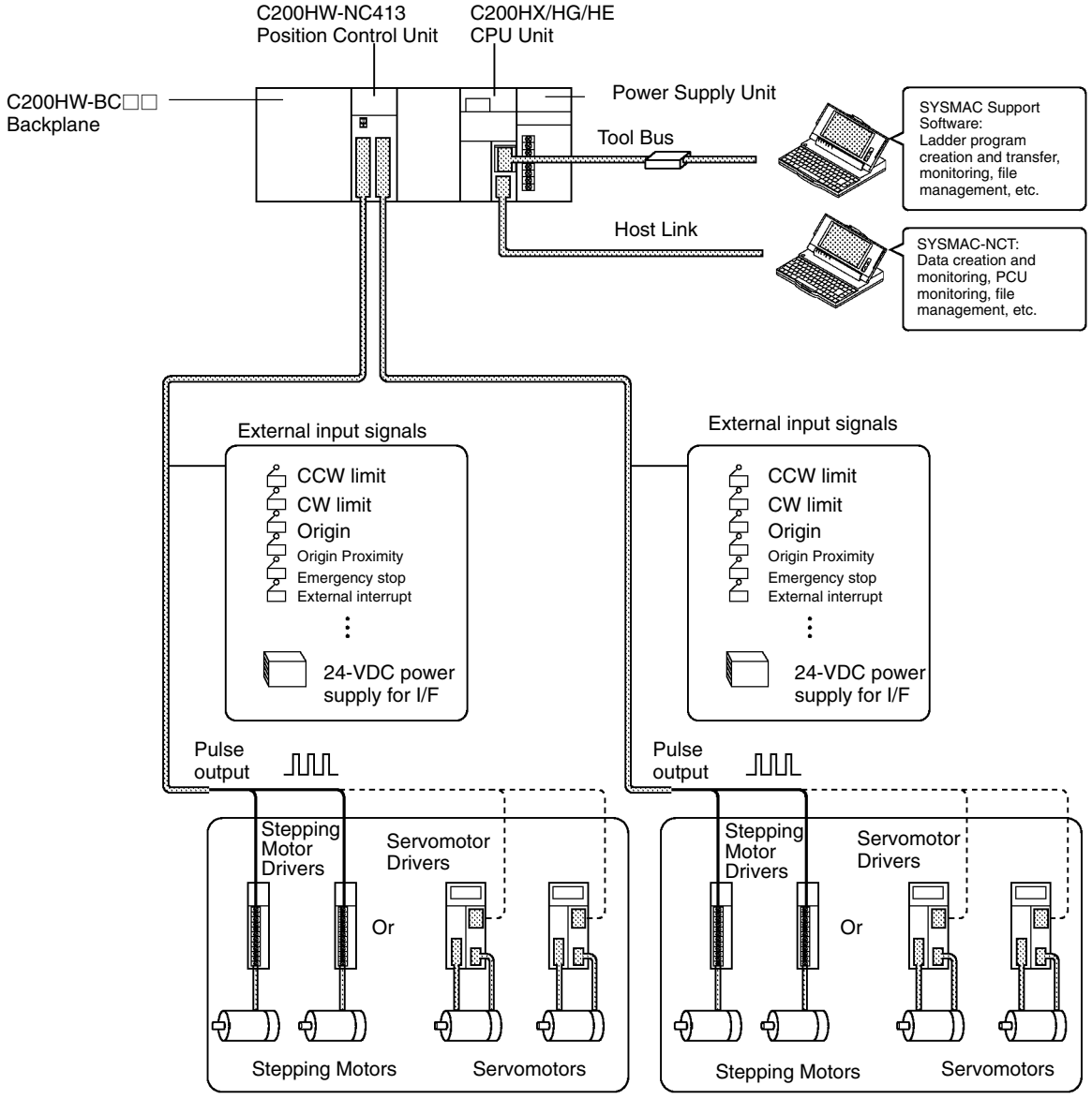

Number of Usable Units

The Position Control Unit belongs to the SYSMAC C200H, C200HS, and C200HX/HG/HE Special I/O Unit group. The numbers of Special I/O Units (including PC Link Units) that can be mounted to a single CPU Unit are shown in the following table.

Item		C200H, C200HS, C200HE, C200HX/HG-CPU3□/4□-(Z)E	C200HX/HG-CPU5□/6□-(Z)E
Number of usable Units	C200HW-NC113	10 max.	16 max.
	C200HW-NC213	10 max.	16 max.
	C200HW-NC413	5 max.	8 max.

- For details on the particular Units that belong to each of the Special I/O Unit groups, refer to the appropriate Programmable Controller operation manual.

- There are restrictions on the maximum current provided to each Rack and the the current consumption for each Unit. For details, refer to the appropriate Programmable Controller operation manual.
- There are restrictions on the use of Remote I/O Slave Racks. These restrictions are explained in *Restrictions on Using Remote I/O Slave Racks* below.

Restrictions on Using Remote I/O Slave Racks

As shown in the following table, the number of Special I/O Units that can be used on a single Remote I/O Slave Rack is determined by the the particular Special I/O Unit group (A, B, C, or D).

	Group A	Group B	Group C	Group D
Units in group	High-speed Counter Units Position Control Unit (NC111/112) (NC113/213) ASCII Units Analog I/O Units ID Sensor Units Fuzzy Logic Units	High-density I/O Units Temperature Control Units Heat/Cool Temperature Control Units PID Control Units Cam Positioner Unit	Temperature Sensor Units Voice Unit	Position Control Units (NC211) (NC413)
Number of Units that can be used	4 Units	8 Units	6 Units	2 Units

- If Special I/O Units from different groups are to be mixed, then use a combination that satisfies the following two formulas:
  $3A + B + 2C + 6D \leqq 12$
  $A + B + C + D \leqq 8$
- There are restrictions on the number of Units that can be used with particular CPU Units. For details, refer to *Number of Usable Units* described previously.

System Configuration Considerations

- The I/O bits allocated to a particular Special I/O Unit are determined by the unit number that is set by the switch on the front panel of the Unit, and not by the slot in which the Unit is mounted.
- With the C200H, do not mount a Position Control Unit in the two slots adjacent to the CPU Unit. If it is mounted in those slots, it will not be possible to mount tools such as the Programming Console.
- Special I/O Units cannot be used with C200H Remote I/O Slave Racks that are connected to Remote I/O Master Racks for other SYSMAC Programmable Controller models (such as C120, C500, C1000H, and C2000H).

Mounting the Unit

Follow the procedure outlined below to mount the Position Control Unit to the Backplane.

1, 2, 3... 1. Insert the hook on the upper rear of the Unit into the slot in the Backplane.

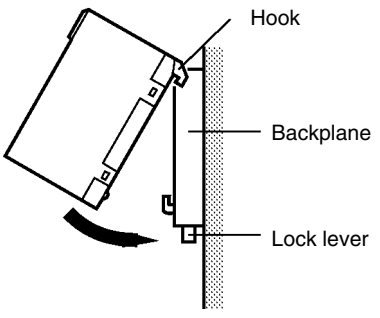

2. Carefully insert the Unit into the connector on the Backplane.

3. To remove the Unit. use an implement such as a screwdriver to press down on the lock lever and then carefully lift the Unit out.

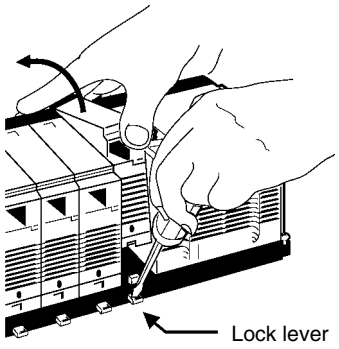

Note When installing Units on a Rack, leave adequate space for mounting and removing the Units as shown in the following diagram.

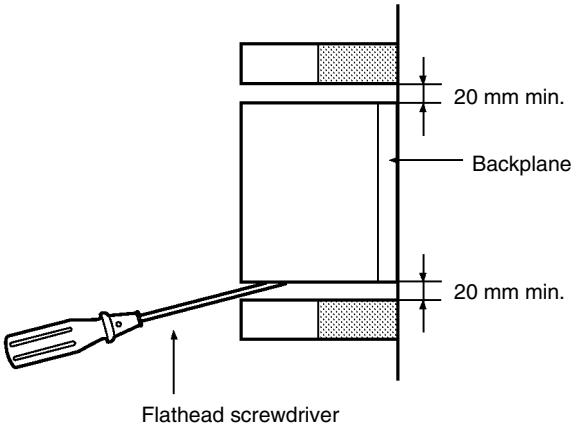

Precautions When Handling the Unit

- Before installing or disconnecting the Unit or connecting cable, be sure to first turn off both the Programmable Controller and the power supply.
- To minimize any influence from noise, place I/O wiring, high-voltage lines, and power lines in separate ducts.
- Wire clippings tend to get scattered around during wiring, so leave the label in place on top of the Unit to prevent any clippings from getting inside the Unit. Once the wiring has been completed, be sure to remove the label to provide ventilation.

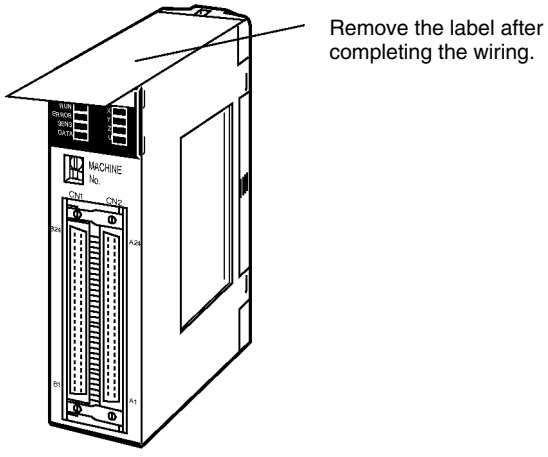

1-3 Basic Operations

The C200HW-NC113 (one axis), C200HW-NC213 (two axes), and C200HW-NC413 (four axes) Position Control Units are designed for use with C200HX/HG/HE-series and C200H/C200HS-series systems.

1-3-1 Position Control

Positioning can be executed with either an absolute value (i.e., to an absolute position from the origin) or with an incremental value (i.e., to a relative position from the present position).

There are two methods for positioning: memory operation and direct operation. Interrupt feeding, in which operation proceeds for the specified amount after an interrupt input, is also possible.

Memory Operation

With memory operation, positioning sequences (i.e., individual positioning operations, which include data such as positions and speeds) are transferred to the Position Control Unit in advance, and then positioning is executed from the Programmable Controller by specifying those positioning sequences by number.

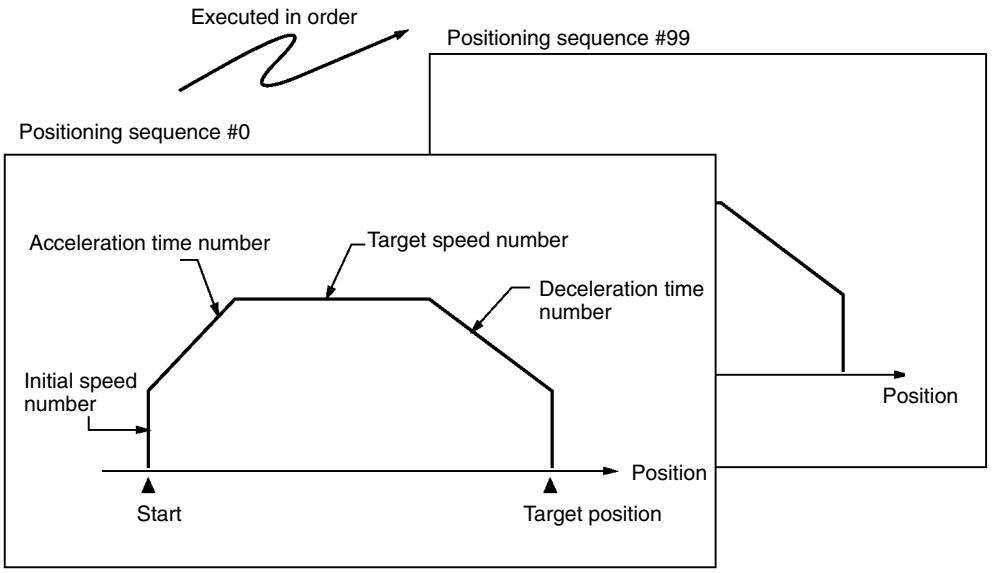

Depending on the completion code that is set, positioning sequences can be executed using terminating positioning, automatic positioning, or continuous positioning. In the following illustrations, “#0” and “#1” indicate positioning sequence numbers.

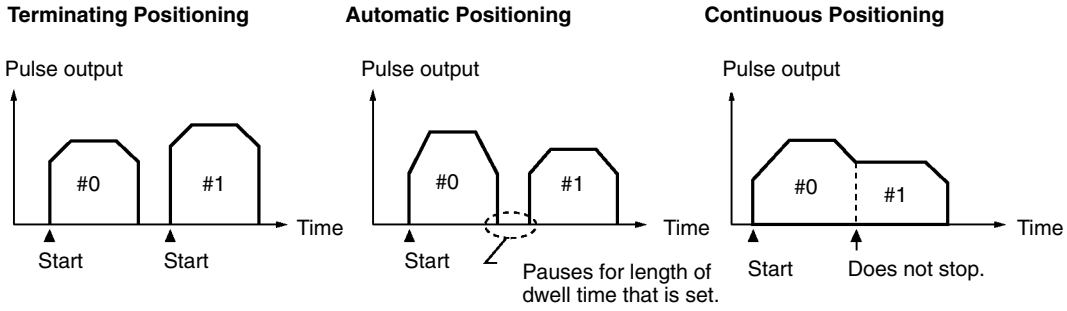

Direct Operation

With direct operation, positions and speeds are set in allocated areas in the Programmable Controller’s DM and EM areas, and positioning is executed using that data.

Interrupt Feeding

When an interrupt input signal is received, positioning is continued for the specified amount of pulses and then stopped.

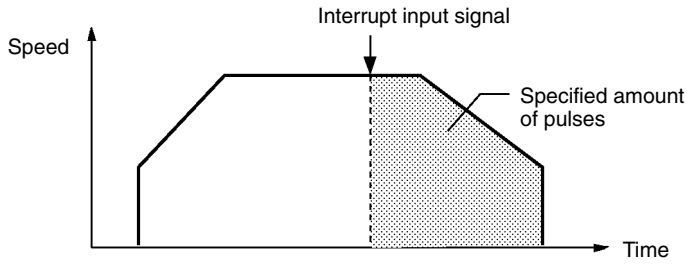

1-3-2 Speed Control

When a start is executed once, pulses are continuously output at a constant rate. The pattern depends on the completion code that is set for “memory operation” positioning sequences. To stop the sequence, use the STOP command.

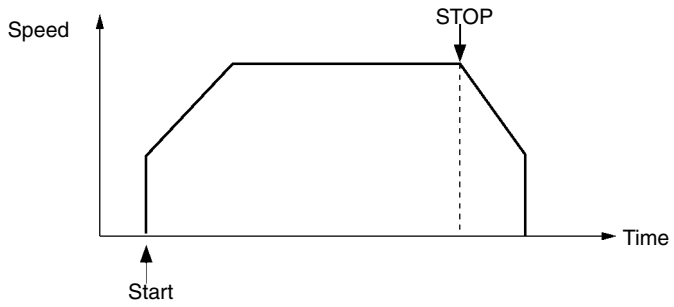

1-3-3 Other Operations

Origin Search

The origin search operation finds the origin for the designated axis.

Jogging

The jogging operation moves a specified axis at a designated speed and then stops it.

Teaching

The teaching operation takes the present position for the specified positioning sequence.

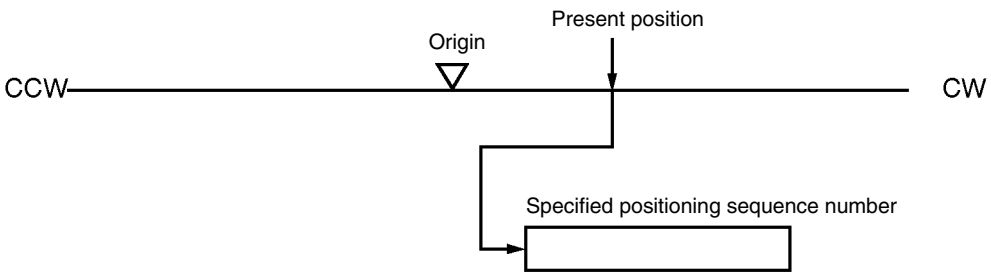

Override

When the override is enabled during positioning, the target speed is changed to the override speed.

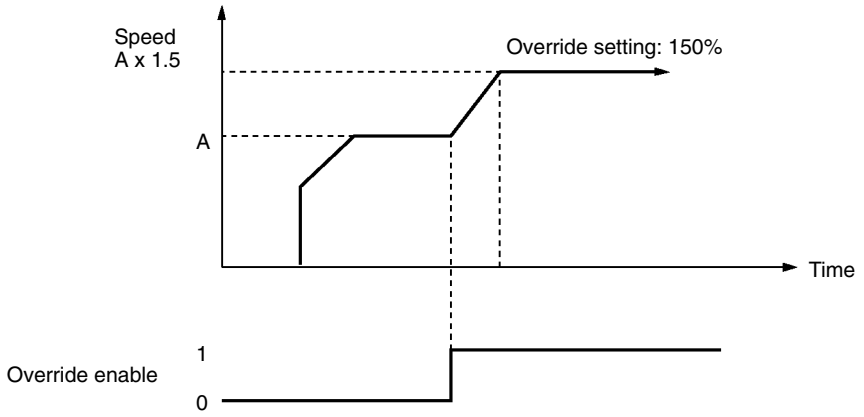

Changing the Present Position

The PRESENT POSITION CHANGE command changes the present position to a specified position.

Backlash Compensation

This operation compensates for the amount of mechanical play, or “looseness,” present in gears.

Zones

A zone is a range of positions which can be defined so that flags are turned ON whenever the present position is within the range.

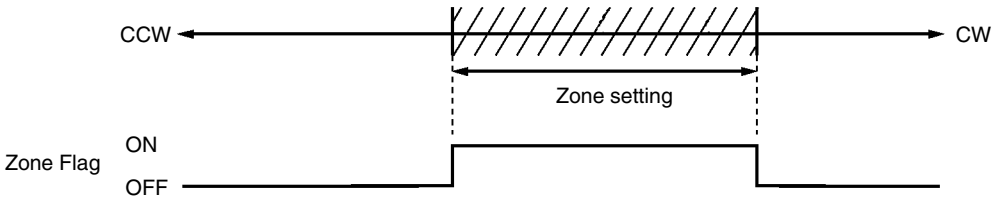

Deceleration Stop

The STOP command decelerates positioning to a stop.

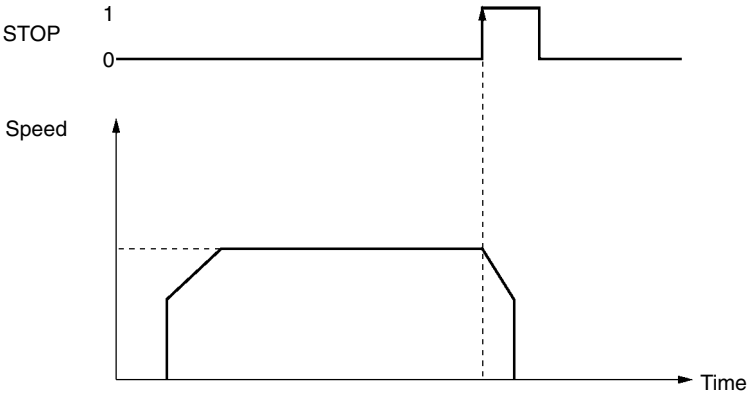

The C200HW-NC113/NC213/NC413 Position Control Unit's operations are as follows:

- PCU operations
  - Position control
    - Memory operation
      - Independent
      - Automatic
      - Continuous
    - Direct operation
    - Interrupt feeding
  - Speed control
  - Other operations
    - Origin search
    - Jogging
    - Teaching
    - Override
    - Present position change
    - Backlash compensation
    - Zone setting
    - Deceleration stop

1-4 Control System Principles

1-4-1 Data Flow

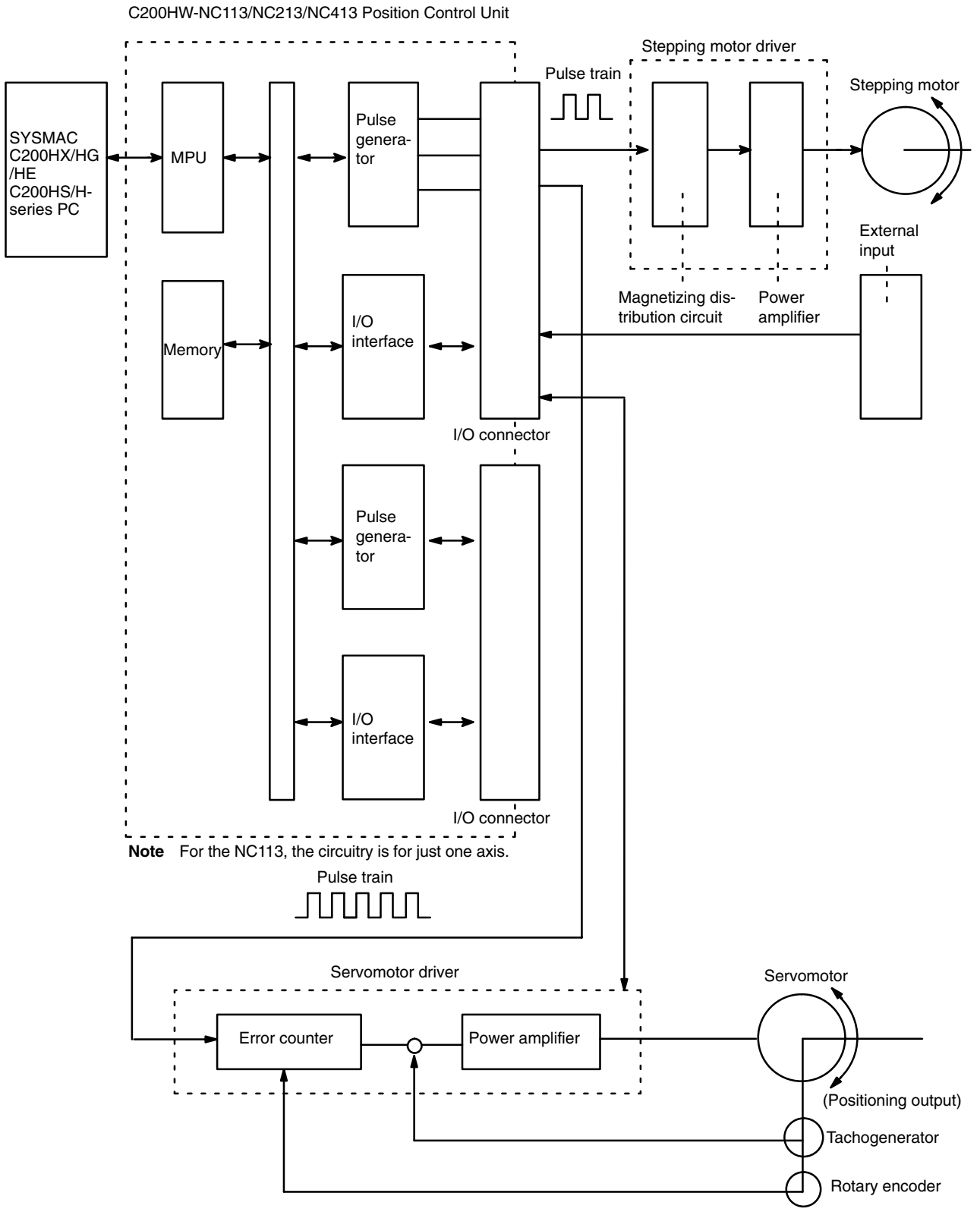

Note For the NC113, the circuitry is for just one axis.

1-4-2 Control System Principles

Open-Loop System

In an open-loop system, positioning is controlled according to the number of input pulses that the motor receives, and no position feedback is provided. The C200HW-NC113/NC213/NC413 PCUs all employ pulse-output-type open-loop systems, and the most commonly used motor for this type of control system is a stepping motor. The angle of rotation of a stepping motor can be controlled through the number of pulse signals supplied to the motor driver. The number of rotations of the stepping motor is proportional to the number of pulses supplied by the PCU, and the rotational speed of the stepping motor is proportional to the frequency of the pulse train.

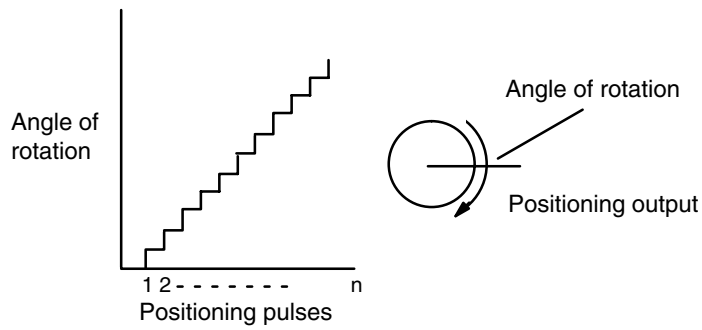

1-4-3 Basic Positioning System Design

The following diagram and parameters illustrate a simplified positioning system.
M : Reduction ratio
P : Feed screw pitch (mm/revolution)
V : Feed velocity of object being positioned (mm/s)
θ_s: Stepping angle per pulse (degree/pulse)

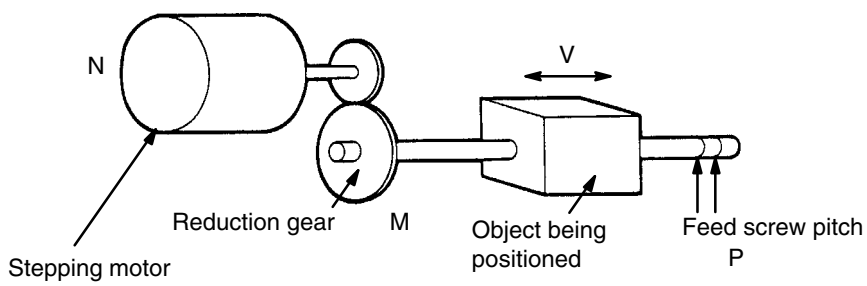

The positioning accuracy in mm/pulse is computed as follows:

Positioning accuracy = P/(pulses per revolution x M)
= P/((360/ θ_s) x M))
= (P x θ_s)/(360 x M)

The required pulse frequency from the PCU (pulses/second) is computed as follows:

Pulse frequency = V/Positioning accuracy
= (360 x M x V)/(P x θ_s)

And the required number of pulses to feed an object by a distance L in mm is computed as follows:

Number of pulses = L/Positioning accuracy
= (360 x M x L)/(P x θ_s)

1-5 Exchanging Data

The Position Control Unit exchanges data with the Programmable Controller as shown in the following diagram. This explanation is provided using the C200HW-NC413 as an example. The size of the allocated areas differs with the NC113 and NC213. For details regarding the data areas for the various PCUs, refer to *Section 4 Data Areas*.

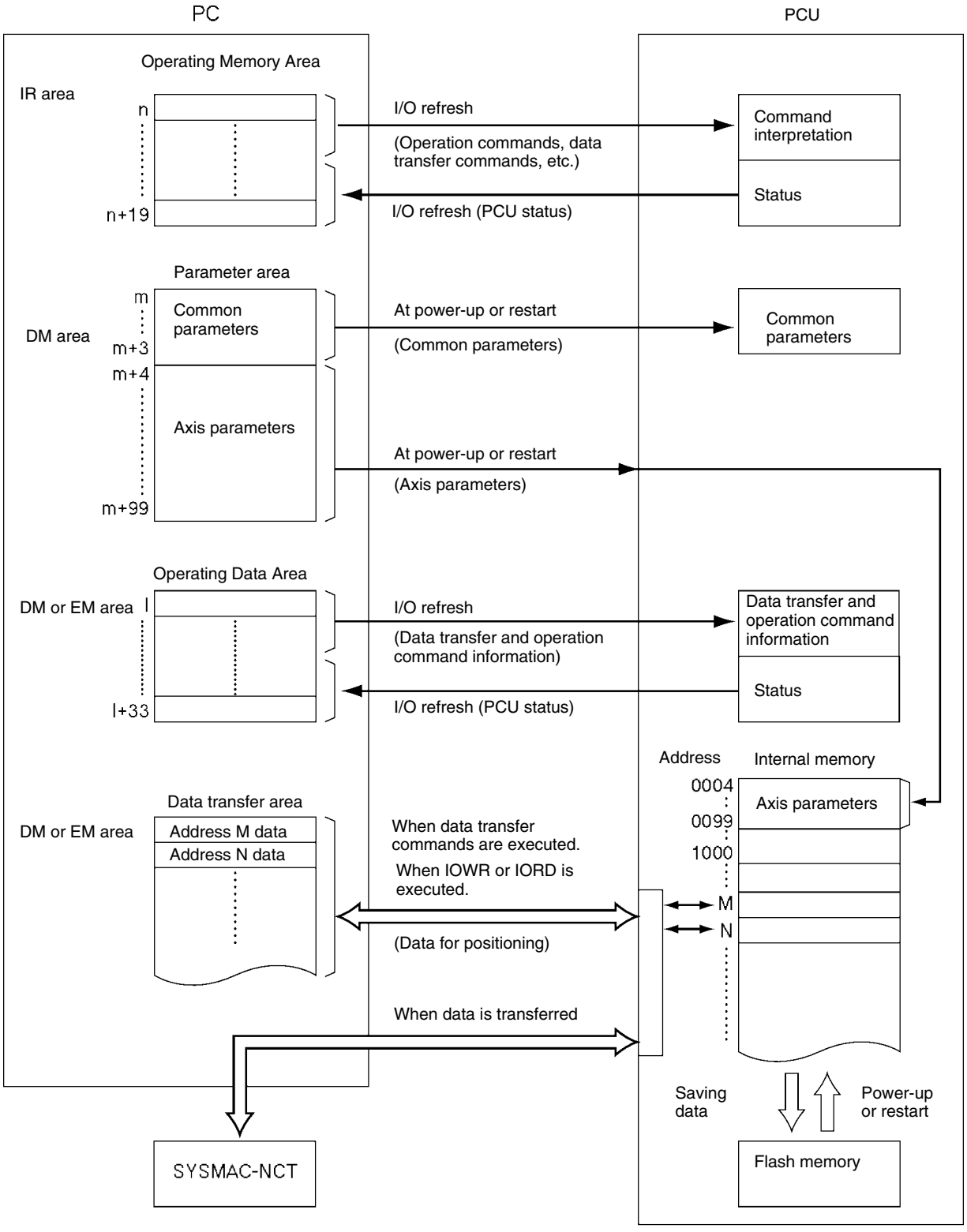

Note The axis parameter data stored in addresses 0004 to 0099 can be transferred from words (m+4) through (m+99) of the DM area, and data can also be transferred for the data transfer area at the Programmable Controller. Moreover, data can be saved to the flash memory.

1-5-1 Explanation

The explanations provided here use the C200HW-NC413 PCU as an example. With the NC213 and NC113, the sizes of the various areas differ depending on the number of axes. For details, refer to *Section 4 Data Areas*.

Operating Memory Area (IR Area)

The PCU occupies 20 words of the Special I/O area within the Programmable Controller's IR area. Of these, eight words are used during I/O refreshing for outputting information related to instructions for operations such as transferring data from the Programmable Controller to the PCU. The remaining 12 words are used for inputting the PCU's status during I/O refreshing.

Parameter Area (DM Area)

The PCU occupies 100 words of the Special I/O Unit data area within the Programmable Controller's DM area. When the PCU is powered up or restarted, common parameters and axis parameters related to control are transferred to the PCU. The axis parameters are stored in the PCU's internal RAM by address.

It is also possible, when the PCU is powered up or restarted, to use axis parameters previously stored in the PCU's internal flash memory, without having them transferred from the Programmable Controller. The selection as to which of these two methods to use is made by a common parameter setting. For details, refer to *4-2 Common Parameter Area*.

Note The common parameter area settings are required when the PCU is used. If these settings are not made, a common parameter error (error codes 0010 to 0013) will be generated.

Operating Data Area

Depending on a common parameters setting, 34 words are reserved in the Programmable Controller's data areas. Of these, 26 words are used during I/O refreshing for outputting information related to data transfers from the Programmable Controller to the PCU, and information used for operations. The remaining eight words are used for inputting the PCU's status during I/O refreshing.

Data Transfer Area

When data is transferred according to the data transfer information set in the operating data area, only the portion of data transferred is used. When the data transfer instructions, Intelligent I/O Write (IOWR) and Intelligent I/O Read (IORD), are executed, the positioning data is transferred to the PCU.

Internal Memory and Flash Memory

Data in internal memory can be saved to flash memory by executing a data save instruction from the Programmable Controller. The saved data is automatically written to the internal memory when the PCU is powered up or restarted. However, whether axis parameters are read from the parameter area (DM) or from flash memory is determined by a common parameters setting.

1-6 Before Operation

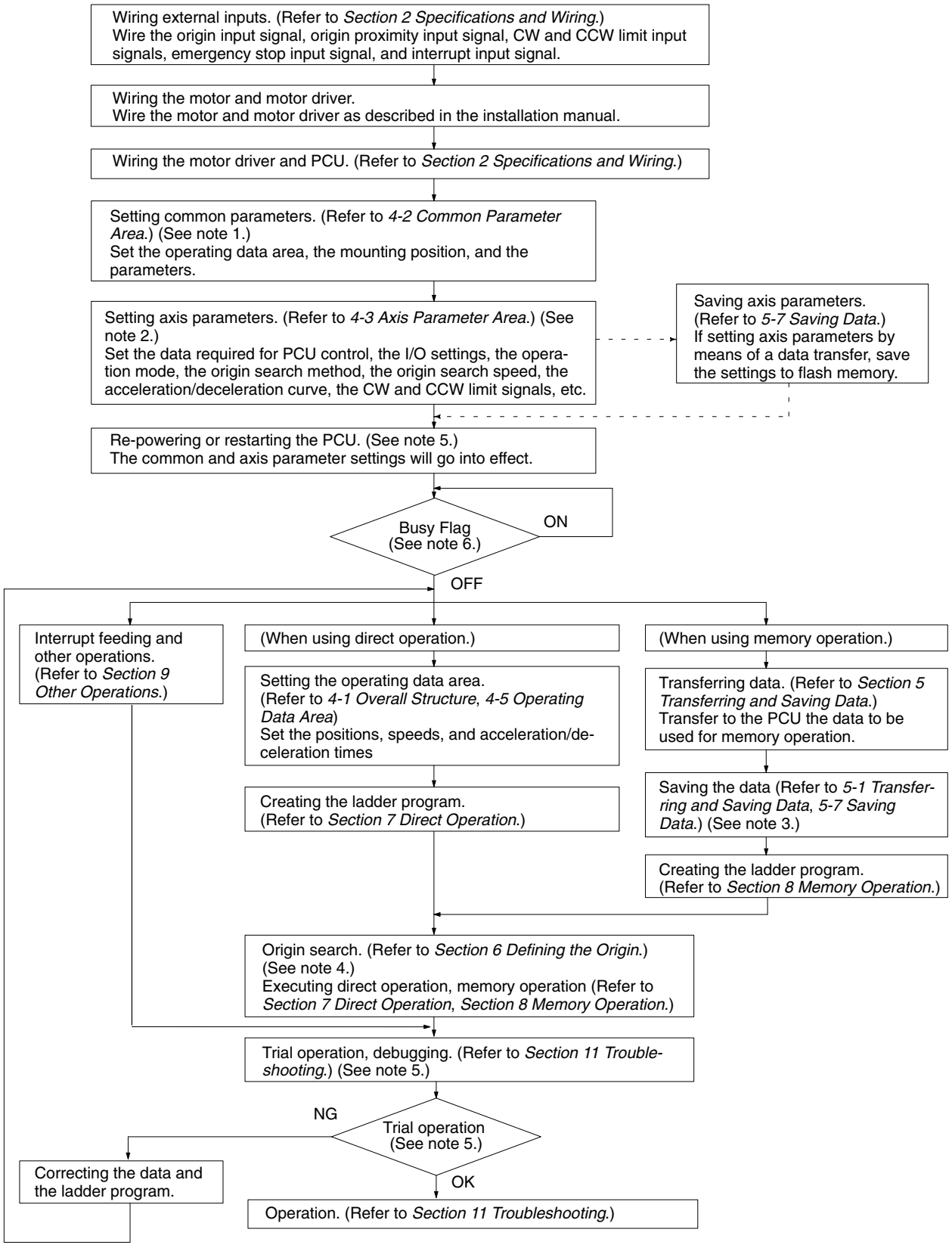

Note 1. These settings are required when first using the PCU, or when changing the operating data area, the mounting position, or the parameter settings.

2. The user can select whether to use the axis parameters set in Data Memory or the axis parameters saved at the PCU.
3. All saved data is automatically read to the PCU's internal memory when the PCU is powered up. If the common parameters are set so that data saved at the PCU is used, then the axis parameters will be automatically read at power-up.
4. For operations that cannot be performed when the origin is not established, it will be necessary to first execute an origin search or a present position change to establish the origin.
5. For the operational flow when an error or alarm is generated, refer to *Section 11 Troubleshooting*.
6. When powering up or restarting the PCU, wait for the X-axis Busy Flag to turn OFF before executing any commands.

SECTION 2
Specifications and Wiring

This section provides the Position Control Unit's specifications and explains the wiring.

2-1 Specifications 18
2-1-1 General Specifications 18
2-1-2 Operations and Performance Specifications 18
2-1-3 I/O Electrical Specifications 19
2-1-4 Dimensions (Unit: mm) 20
2-2 Components 21
2-3 External I/O Circuitry 24
2-3-1 Connector Pin Arrangement 24
2-3-2 External I/O Connector Arrangement 25
2-3-3 I/O Circuitry 27
2-4 Connecting External I/O 30
2-4-1 Output Connection Examples 30
2-4-2 Input Connection Examples 33
2-4-3 Connecting Origin and Positioning Completed Input Signals 35
2-4-4 Wiring Precautions 36
2-5 Connections in Each Operating Mode 37
2-6 Connection of Unused Axes 45
2-6-1 C200HW-NC213 – X Axis Only 45
2-7 Servo Relay Unit 45

2-1 Specifications

2-1-1 General Specifications

The general specifications conform to the specifications for the SYSMAC C200H, C200HS, and C200HX/HG/HE.

2-1-2 Operations and Performance Specifications

Item		Model		
		C200HW-NC113	**C200HW-NC213**	**C200HW-NC413**
Applicable PC models		C200HX/HG/HE-series and C200HS/H-series		
I/O requirements	Words	5 words	10 words	20 words
	Slots	1 slot		
Controlled driver		Pulse-train input-type servomotor driver or stepping motor driver		
Control	Control system	Open-loop control by pulse train output		
	Number of control axes	1 axis	2 axes	4 axes
Control unit		Pulse		
Positioning operations		Two types: memory operation and direct operation		
	Independent	1 axis	2 independent axes	4 independent axes
	Linear interpolation	None	2 axes max.	4 axes max.
	Speed control	1 axis	2 independent axes	4 independent axes
	Interrupt feeding	1 axis	2 independent axes	4 independent axes
Positions	Range	–9,999,999 to 9,999,999 pulses		
	Data items	100/axis		
Speeds	Range	1 pps to 500 Kpps		
	Data items	100/axis		
Acceleration and deceleration times	Range	0 to 250 s, until maximum speed is reached.		
	Data items	9/axis for acceleration and deceleration each		
Functions and settings	Origin search	Origin proximity input signal: selectable (absent, N.O. or N.C. contact). Origin input signal: selectable (N.O. or N.C. contact) Origin compensation: –9,999,999 to 9,999,999 pulses Origin search speed: High-speed or proximity-speed can be set. Origin search method: May be set to stop upon origin input signal after proximity input signal has turned ON, to stop upon origin input signal after proximity input signal has turned OFF, to stop upon origin input signal without using proximity input signal, or to stop upon origin input signal after limit input signal has turned OFF. N.O. = Normally open N.C. = Normally closed		
	Jogging	Jogging can be executed at a specified speed.		
	Dwell times	19/axis can be set from 0 to 9.99 s (unit: 0.01 s).		
	Acceleration/ deceleration curves	Trapezoidal or S-curve (Can be set separately for each axis.)		
	Zones	Zone Flag turns ON when present position is within a specified zone. Three zones can be set for each axis.		
	Software limit	Can be set within a range of –9,999,999 to 9,999,999 pulses.		
	Backlash compensation	0 to 9,999 pulses. Compensation speed can also be set.		
	Teaching	With a command from the PC, the present position can be taken as the position data.		
	Deceleration stop	The STOP command causes positioning to decelerate to a stop according to the specified deceleration time.		
	Emergency stop	Pulse outputs are stopped by an external emergency stop command.		

Item		Model		
		C200HW-NC113	C200HW-NC213	C200HW-NC413
Functions and settings	Present position change	The PRESENT POSITION CHANGE command can be used to change the present position to a specified value.		
	Override	When the override enabling command is executed during positioning, the target speed is changed by applying the override coefficient. Possible to set to a value from 1 to 999% (by an increment of 1%)		
	Data saving	1) Saving to flash memory. (Can be written 100,000 times.) 2) Reading to PC area by data reading instruction. 3) Reading by SYSMAC-NCT Support Tool and saving to personal computer hard disk or floppy disk.		
External I/O	Inputs	Prepare the following inputs for each axis: CW and CCW limit input signals, origin proximity input signal, origin input signal, emergency stop input signal, positioning completed signal, interrupt input signal		
	Outputs	Prepare the following outputs for each axis: Pulse outputs (open collector outputs) CW/CCW pulses, pulse outputs and direction outputs can be switched. Either error counter reset or origin-adjustment command outputs can be selected depending on the mode.		
Pulse output distribution period		4 ms		
Response time		Refer to *Appendix A Data Calculation Standards*.		
Self-diagnostic function		Flash memory check, memory loss check, I/O bus check		
Error detection function		Overtravel, CPU error, software limit over, emergency stop		
Internal current consumption (provided from Backplane)		5 VDC at 300 mA max.	5 VDC at 300 mA max.	5 VDC at 500 mA max.
Dimensions (one size)		130 (H) x 34.5 (W) x 100.5 (D)		
Weight (excluding connectors)		250 g max.	300 g max.	350 g max.

2-1-3 I/O Electrical Specifications

Input Specifications

Item	Specification
Voltage	24 VDC ±10%
Current	4.3 mA (at 24 V) typ.
ON voltage	17.4 VDC min.
OFF voltage	5.0 VDC max.
ON response time	1 ms max. (0.1 ms max.: Interrupt input)
OFF response time	1 ms max.

Origin-signal Input Specifications

Item	Connection Terminal		Specification	Response Time
External signal is open-collector signal	X/Z Axis	A15 A14	Conform to above input specifications	N.O. contact: 0.1 ms max. N.C. contact: 1 ms max.
	Y/U Axis	B15 B14		
External signal is line-driver signal	X/Z Axis	A16 A14	Signal is a line-driver output signal corresponding to Am26LS31	N.O. contact: 0.1 ms max. N.C. contact: 1 ms max.
	Y/U Axis	B16 B14		

Output Specifications

Item	Specification
Maximum switching capacity	30 mA at 4.75 to 26.4 VDC (NPN open collector) (16 mA: Terminals with 1.6-kΩ limit resistance)
Minimum switching capacity	7 mA at 4.75 to 26.4 VDC (NPN open collector)
Leakage current	0.1 mA max.
Residual voltage	0.6 V max.
External power supply	24 VDC ±10% NC413: 90 mA max. NC213: 50 mA max. NC113: 30 mA max.

CW/CCW Pulse Output Specifications

The minimum CW/CCW pulse widths are shown below.
The OFF and ON refer to the output transistor.
The output transistor is ON at level "L."

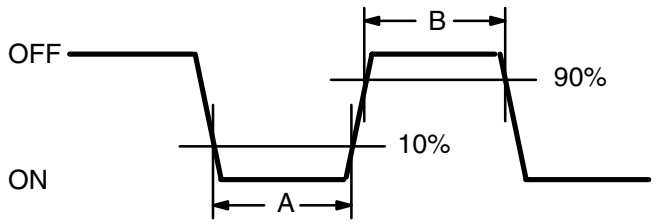

Pulse frequency	Open or close current / Loaded power-source voltage							
	7 mA/5 VDC±5%		30 mA/5 VDC±5%		7 mA/24 VDC±10% (1.6-kΩ resistance)		16 mA/24 VDC±10% (1.6-kΩ resistance)	
	A	B	A	B	A	B	A	B
50 Kpps	9.7 µs min.	9.7 µs min.	9.8 µs min.	9.8 µs min.	9.7 µs min.	9.7 µs min.	9.7 µs min.	9.7 µs min.
100 Kpps	4.7 µs min.	4.7 µs min.	4.8 µs min.	4.8 µs min.	4.7 µs min.	4.7 µs min.	4.8 µs min.	4.8 µs min.
200 Kpps	2.3 µs min.	2.3 µs min.	2.3 µs min.	2.3 µs min.	2.2 µs min.	2.2 µs min.	2.3 µs min.	2.3 µs min.
500 Kpps	0.76 µs min.	0.82 µs min.	0.77 µs min.	0.88 µs min.	0.74 µs min.	0.72 µs min.	0.76 µs min.	0.85 µs min.

Note 1. The load in the above table is the net resistance load, and the connecting cable impedance with the load is not considered.

2. Due to distortions in pulse waveforms as a result of connecting cable impedance, pulse widths during actual usage may be smaller than those shown in the above table.

2-1-4 Dimensions (Unit: mm)

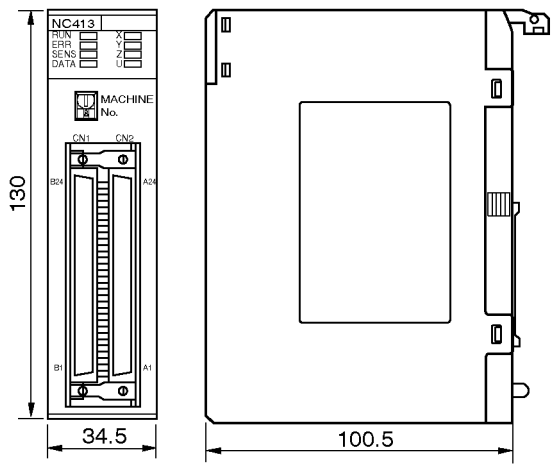

Mounted Dimensions

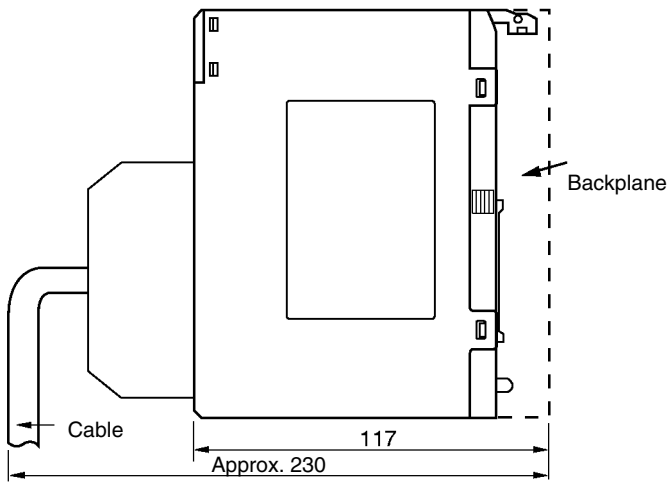

2-2 Components

Nomenclature

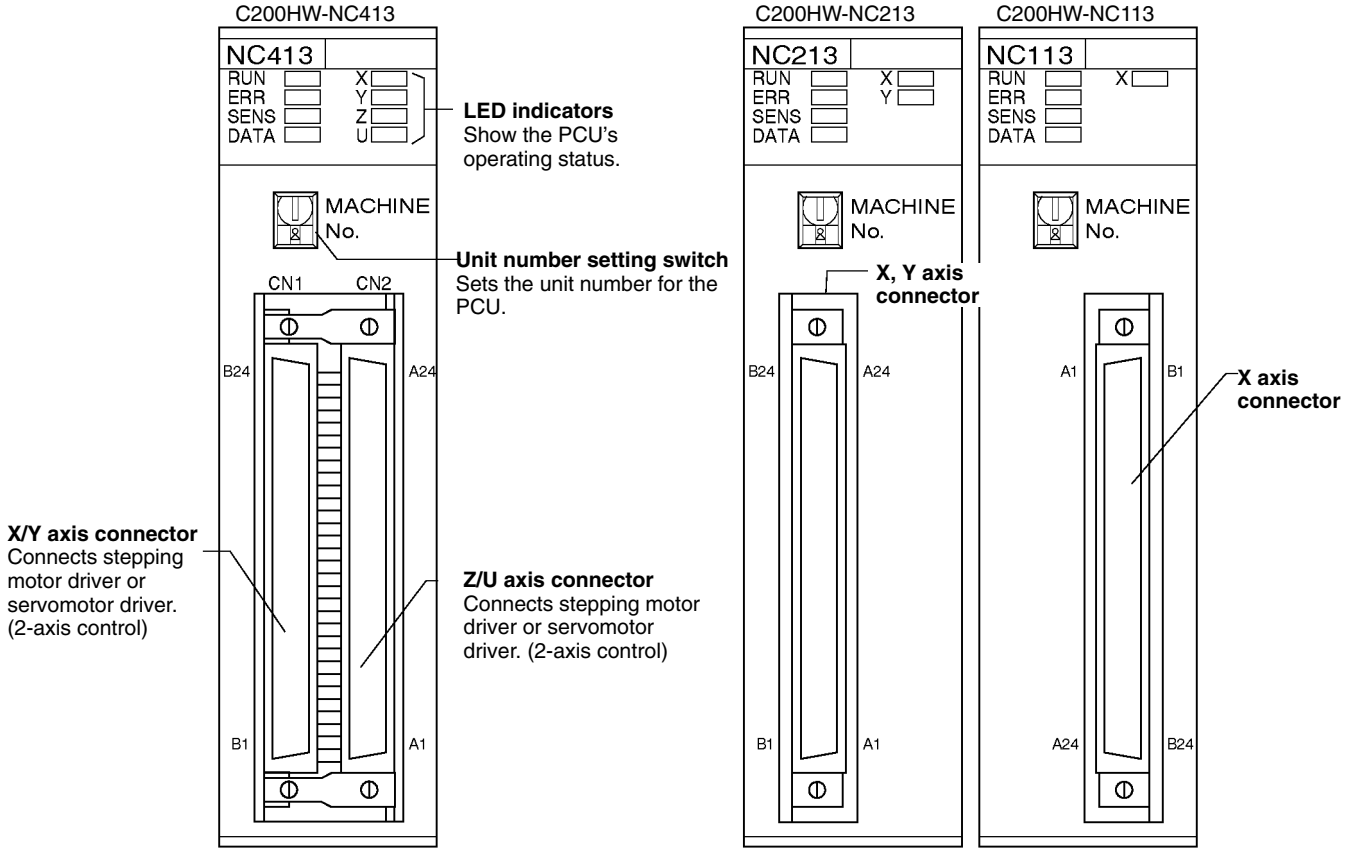

LED Indicators

Name	Color	Status	Explanation
RUN	Green	Lit	Lit during normal operation.
		Not lit	Hardware error, or PC notified of PCU error.
ERR	Red	Lit / flashing	An error has occurred.
		Not lit	No error has occurred.
SENS	Red	Lit	Either a CW/CCW limit signal or an emergency stop input signal is being input. At this time the LED indicator for the relevant axis (X to U) will flash.
		Flashing	Either a parameter loss, a data loss, or an operating data area designation error has occurred.
		Not lit	None of the above has occurred.
DATA	Red	Flashing	The check of all data (parameters, positions, etc.) following power up shows that data is lost or corrupted.
		Lit	Data is incorrect (e.g., the parameters or positions transferred are out of the permissible range). At this time the LED indicator for the relevant axis (X to U) will flash.
DATA	Red	Not lit	None of the above has occurred.
X	Orange	Lit	Pulses are being output to the X axis (either forward or reverse).
		Flashing	An error has occurred, such as incorrect cable type for the X axis or faulty data.
		Not lit	None of the above has occurred.
Y	Orange	Lit	Pulses are being output to the Y axis (either forward or reverse).
		Flashing	An error has occurred, such as incorrect cable type for the Y axis or faulty data.
		Not lit	None of the above has occurred.
Z	Orange	Lit	Pulses are being output to the Z axis (either forward or reverse).
		Flashing	An error has occurred, such as incorrect cable type for the Z axis or faulty data.
		Not lit	None of the above has occurred.
U	Orange	Lit	Pulses are being output to the U axis (either forward or reverse).
		Flashing	An error has occurred, such as incorrect cable type for the U axis or faulty data.
		Not lit	None of the above has occurred.

Note For details regarding errors, refer to *Section 11 Troubleshooting*.

- For the C200HW-NC213, this applies only to the X axis; for the C200HW-NC213, it applies only to the X and Y axes.
- When not all of the axes are used for the C200HW-NC213 or C200HW-NC413, either connect the CW/CCW limit inputs for the unused axes to the input power supply and turn them ON or set the contact logic to N.O. Connect the emergency stop to the input common and turn it ON. If it is not connected, the ERR indicator will light. Operation will be normal, however, for all axes that are used.

Unit Number Setting Switch

This switch sets the unit number (i.e., the machine number) for the PCU.

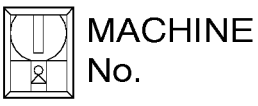

The permissible range of unit number settings depends on the type of Programmable Controller and the PCU model, as shown in the following table.

PC type	PCU model	Setting range
C200HX/HG-CPU3□/4□ and all C200HE/HS/H models	NC113/NC213	0 to 9
	NC413	0 to 8
C200HX/HG-CPU5□/6□	NC113/NC213	0 to 9, A to F
	NC413	0 to 8, A to E

Any unit number within the permissible range can be set, as long as it does not overlap with the unit numbers that are set for any other Special I/O Units mounted to the same Programmable Controller.

Caution Be sure to turn off the power supply before making the settings.

The IR and DM areas are allocated according to the unit numbers that are set. For details regarding allocated word addresses, refer to the memory area allocation tables in *Section 4 Data Areas*.

2-3 External I/O Circuitry

2-3-1 Connector Pin Arrangement

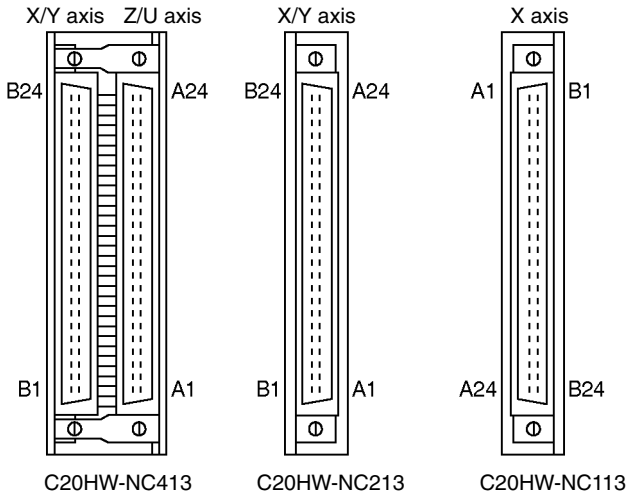

Connector pin arrangement for X and Z axes			Connector pin arrangement for Y and U axes		
Pin No.	I/O	Designation	Pin No.	I/O	Designation
A1	IN	Output power supply, 24 VDC	B1	IN	Output power supply, 24 VDC
A2	IN	Output GND, 24 VDC	B2	IN	Output GND, 24 VDC
A3	---	Not used	B3	---	Not used.
A4	---	Not used	B4	---	Not used.
A5	OUT	CW pulse output	B5	OUT	CW pulse output
A6	OUT	CW pulse/pulse output with 1.6 kΩ resistance	B6	OUT	CW pulse/pulse output with 1.6 kΩ resistance
A7	OUT	CCW pulse/direction output	B7	OUT	CCW pulse/direction output
A8	OUT	CCW pulse/direction output with 1.6 kΩ resistance	B8	OUT	CCW pulse/direction output with 1.6 kΩ resistance
A9	---	Not used	B9	---	Not used.
A10	OUT	Error counter reset output Origin-adjustment command output	B10	OUT	Error counter reset output Origin-adjustment command output
A11	OUT	Error counter reset output with 1.6 kΩ resistance Origin-adjustment command output with 1.6KΩ resistance	B11	OUT	Error counter reset output with 1.6 kΩ resistance Origin-adjustment command output with 1.6KΩ resistance
A12	IN	Positioning completed input signal	B12	IN	Positioning completed input signal
A13	---	Not used	B13	---	Not used.
A14	IN	Origin common	B14	IN	Origin common
A15	IN	Origin input signal (24 V)	B15	IN	Origin input signal (24 V)
A16	IN	Origin input signal (5 V)	B16	IN	Origin input signal (5 V)
A17	---	Not used	B17	---	Not used.
A18	---	Not used	B18	---	Not used.
A19	IN	Interrupt input signal	B19	IN	Interrupt input signal
A20	IN	Emergency stop input signal	B20	IN	Emergency stop input signal
A21	IN	Origin proximity input signal	B21	IN	Origin proximity input signal
A22	IN	CW limit input signal	B22	IN	CW limit input signal
A23	IN	CCW limit input signal	B23	IN	CCW limit input signal
A24	IN	Input common	B24	IN	Input common

Note

1. Use either the 24-V origin input signal or the 5-V origin input signal, but not both.
2. Use 24 ±10% VDC as the pulse output power supply.
3. The leakage current must be less than 1.0 mA when two-wire-type sensors are used.
4. Be sure to connect a load to the output terminals. If the load is short-circuited, it will damage the PCU's internal components.
5. The 24-V output power supply (A1/B1) for all axes and the 24-V output ground (A2, B2) are connected in the PCU, and are shared by all axes.
6. When installing connectors to the PCU, tighten the connector screws to a torque of 0.34 N • m.

- The commons for all outputs are connected to the 24-V output ground.
- The commons for all inputs except for the 24-V and 5-V origin input signals and positioning completed input signals are connected to the input common.
- The positioning completed input signal common is connected to the 24-V output power supply through a diode.
- The origin common is used with either the 24-V or the 5-V origin input signal.

2-3-2 External I/O Connector Arrangement

- The connectors that are included with this Unit are solder-type connectors.
- Use wires with cross-sectional areas of 0.2 mm^2 or less.
- Be careful not to short-circuit neighboring terminals when soldering.
- Cover the soldered part of the wire with insulation tubing.

Wiring Power Lines

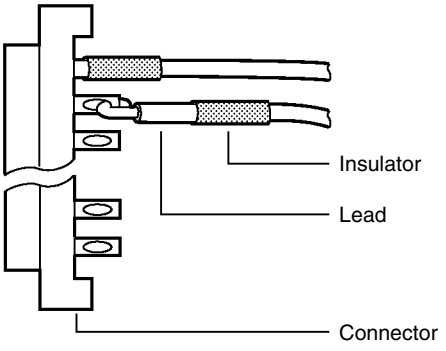

Connector Pin Numbers

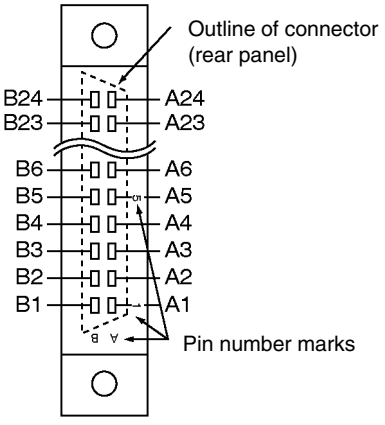

(View from soldered side)

Assembling Connectors Supplied with the Unit

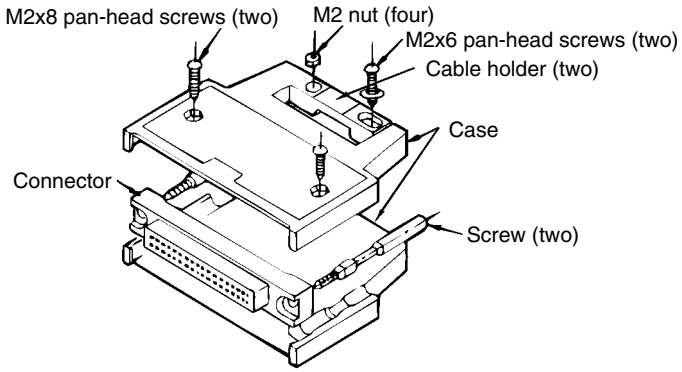

The following connectors (Fujitsu 360 Jack) can be used:

1, 2, 3...

1. FCN-361J048-AU (solder-type)
   FCN-360C048-D (connector cover)
2. FCN-363J048 (crimp-type housing)
   FCN-363J-AU/S (contact)
   FCN-360C048-D (connector cover)
3. FCN-367J048-AU (crimp-type)

Cover Dimensions

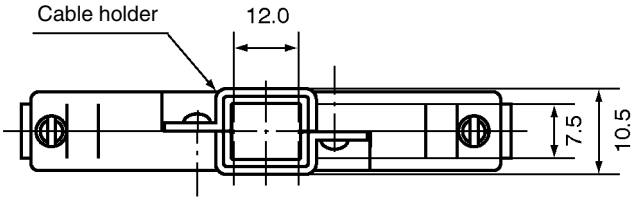

2-3-3 I/O Circuitry

Outputs

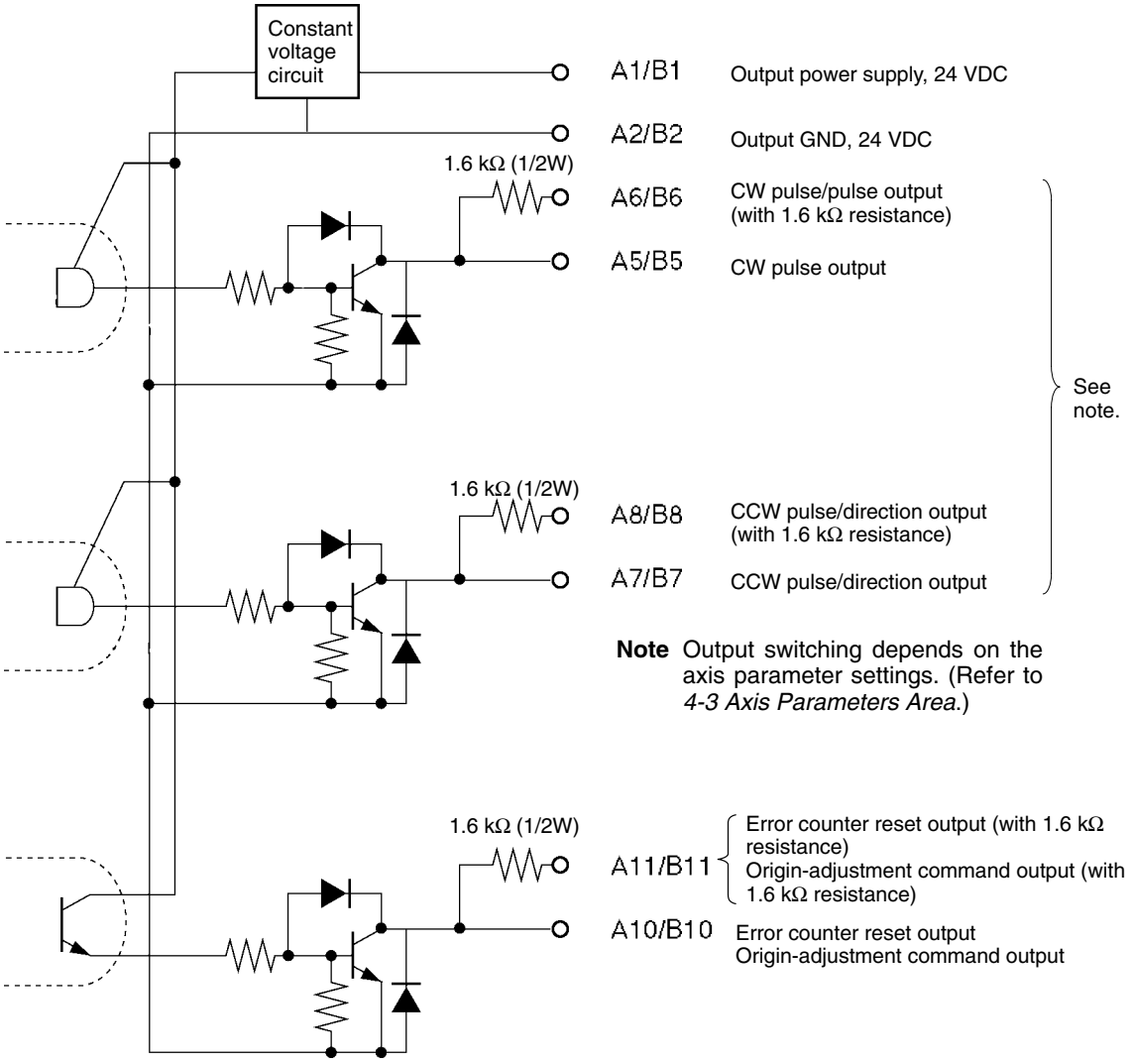

Output Circuitry

The pulse output and error counter reset circuitry of the Position Control Unit are provided with two types of terminals: terminals with 1.6 kΩ (1/2 W) limit resistance and terminals with no resistance. Select the terminals in accordance with the power requirements and the specifications of the motor driver to be used.

⚠ Caution Connect a load of 7 to 30 mA (or 7 to 16 mA for terminals with 1.6 kΩ limit resistance) to the output section. If a current greater than this is used, it will cause damage to the PCU's internal components. Also, be sure to use the CW/CCW output method when using pulse output terminals with limit resistance.

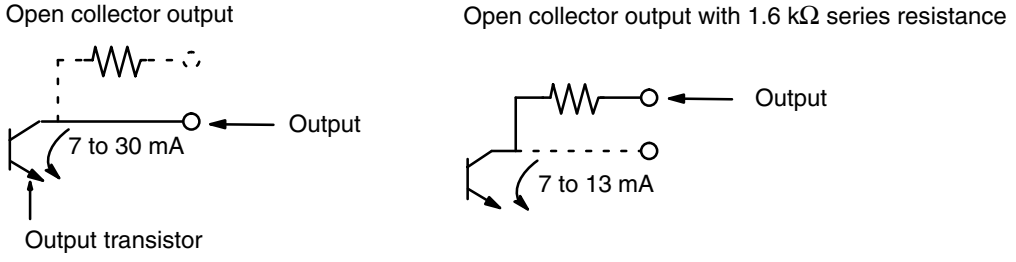

Add bypass resistance for loads less than 7 mA.

(Circuit example)

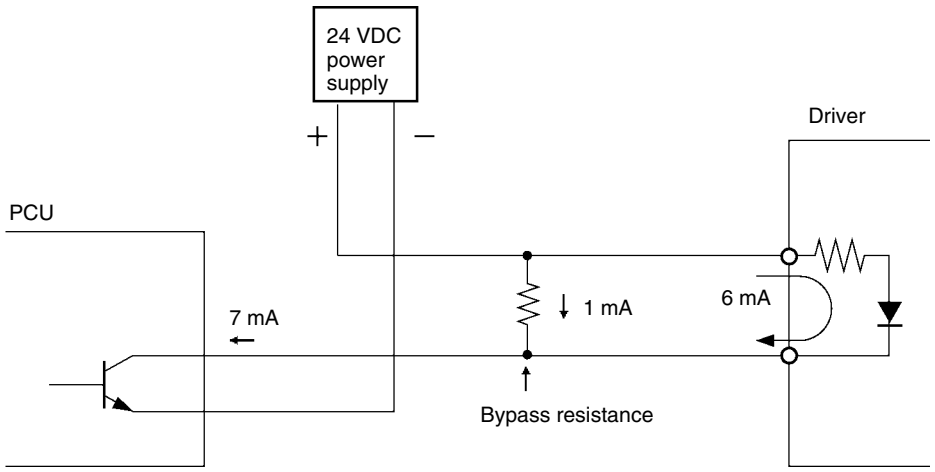

Inputs

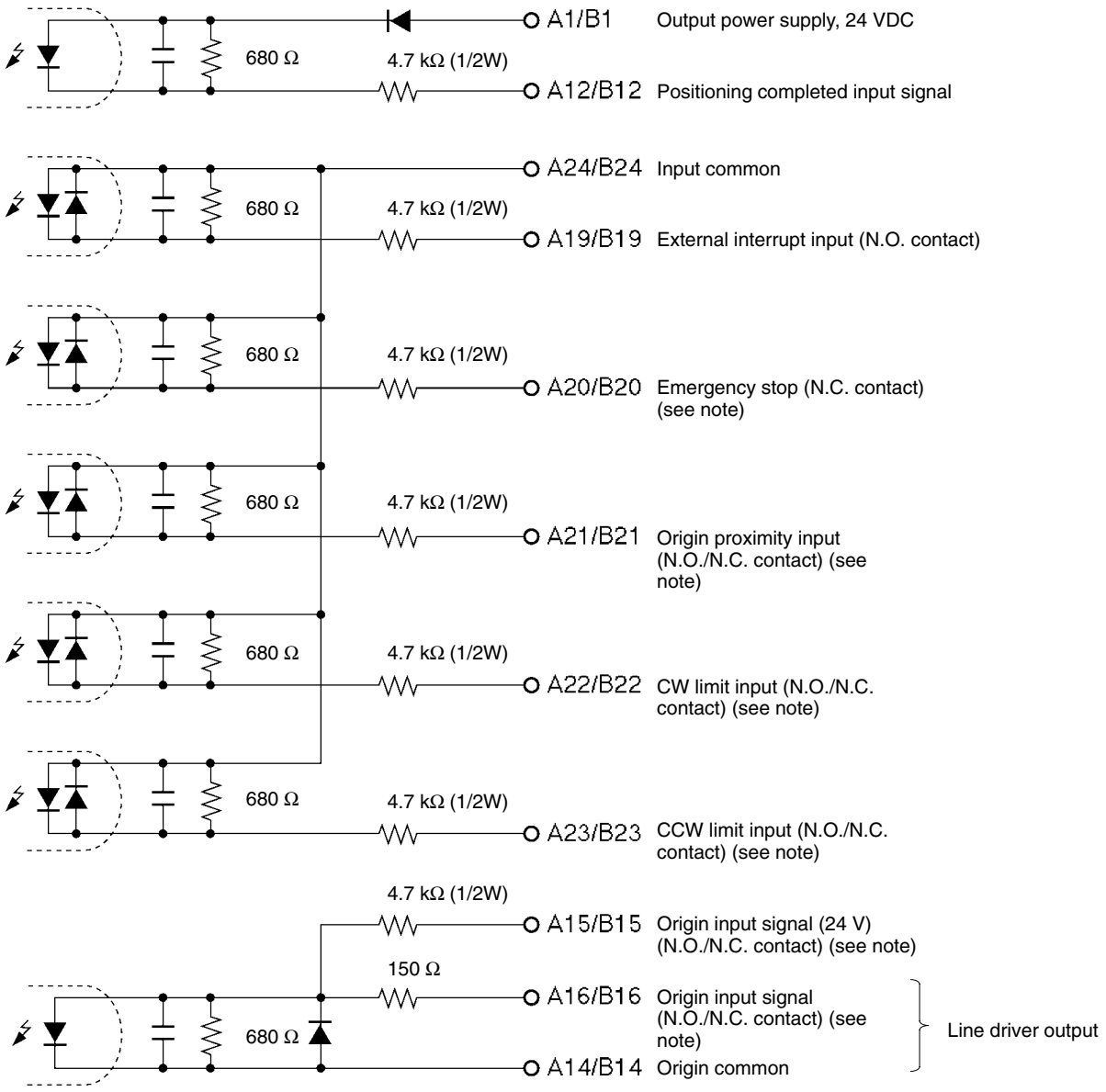

Note Either N.C. or N.O. can be set by the axis parameters. (Refer to *4-3 Axis Parameters Area*.)

Connect a switch with a switching capacity of at least 5 mA to the 24-V origin input signal terminal.

The origin input signal's operating modes are used as follows:

Mode 0: Response time: 0.1 ms (N.O. contact setting)
Use a sensor such as a photoelectric switch with no chattering.

Modes 1/2: Response time: 0.1 ms (N.O. contact setting)
Use when connecting the encoder's Z-phase output (line driver output).

⚠ **Caution** Use either the 24-VDC origin input signal or the 5-VDC origin input signal, but not both. If both are connected it will damage the internal circuitry.
Do not connect the 5-VDC origin input signal input to any output circuit except the line driver.

2-4 Connecting External I/O

This section provides motor driver connection examples. When actually connecting a motor driver, be sure to first check the specifications of the motor driver to be used.

2-4-1 Output Connection Examples

Pulses are not output when the output transistor in the pulse output section is OFF. (For direction output, OFF indicates CCW.)

Do not use a 24-VDC power supply for pulse output in common with the power supply for other I/O.

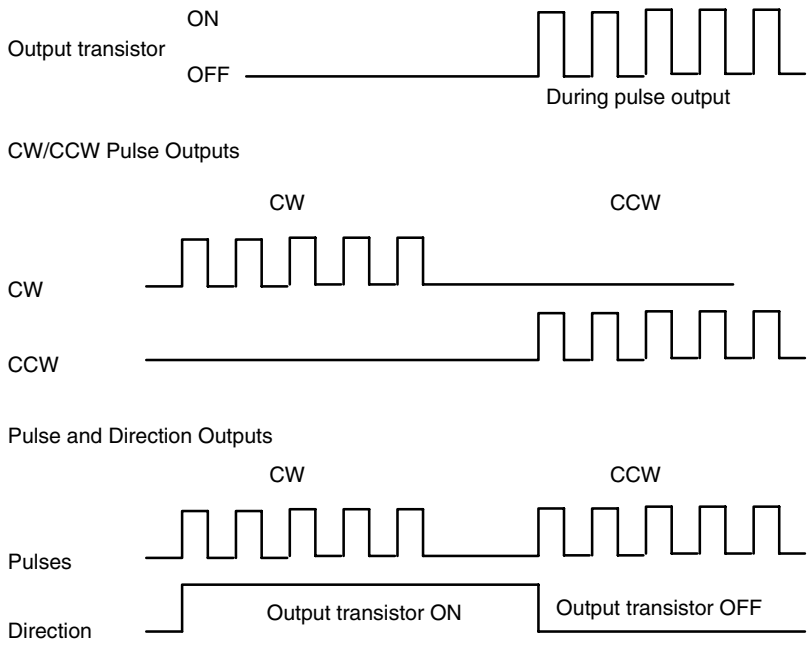

Outputting CW and CCW Pulses

In this example, a 5-VDC photocoupler input motor driver is used for outputting CW and CCW pulses.

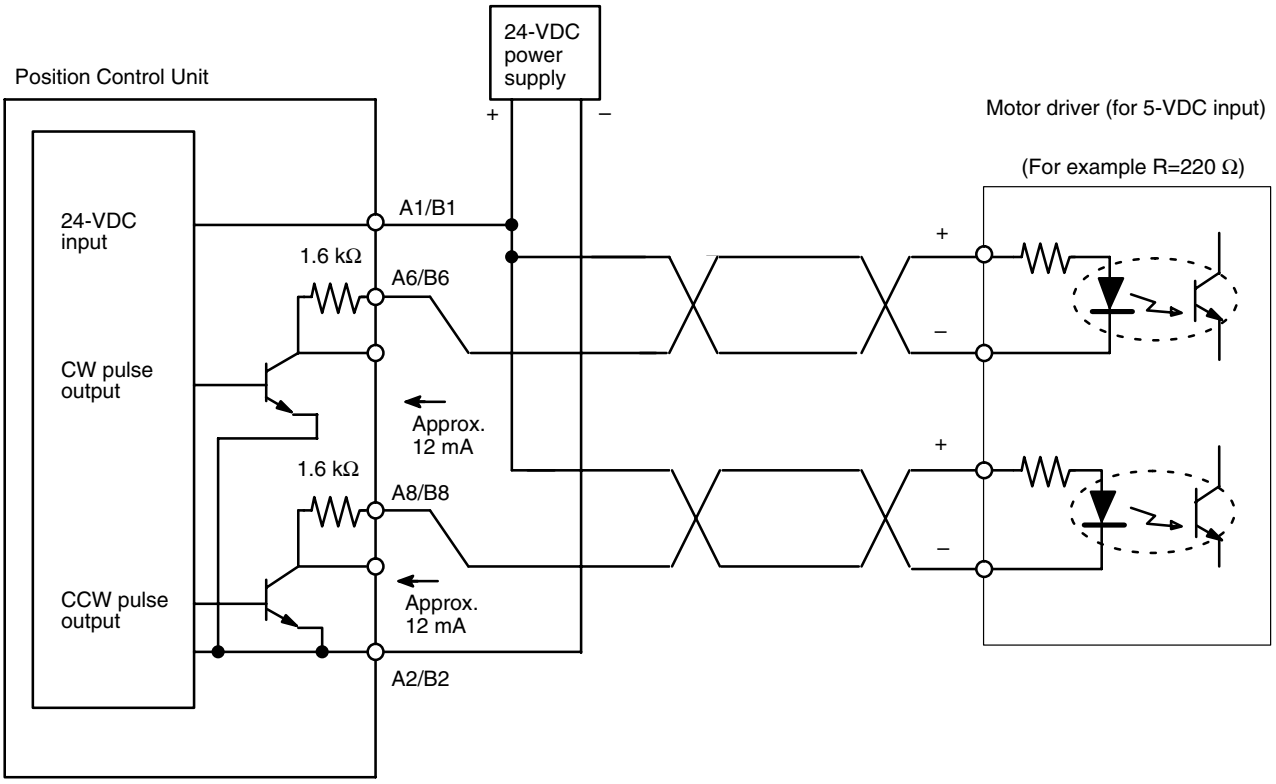

Note In this example, the 1.6 kΩ resistors of the Position Control Unit are used to allow a 24-VDC power supply to be used with a motor driver rated at 5 VDC. When wiring your system, carefully note the current required by the motor driver in order to avoid damaging the input circuitry of the motor driver.

Outputting CW and CCW Pulses

In this example, a 5-VDC photocoupler input motor driver is used for outputting CW and CCW pulses.

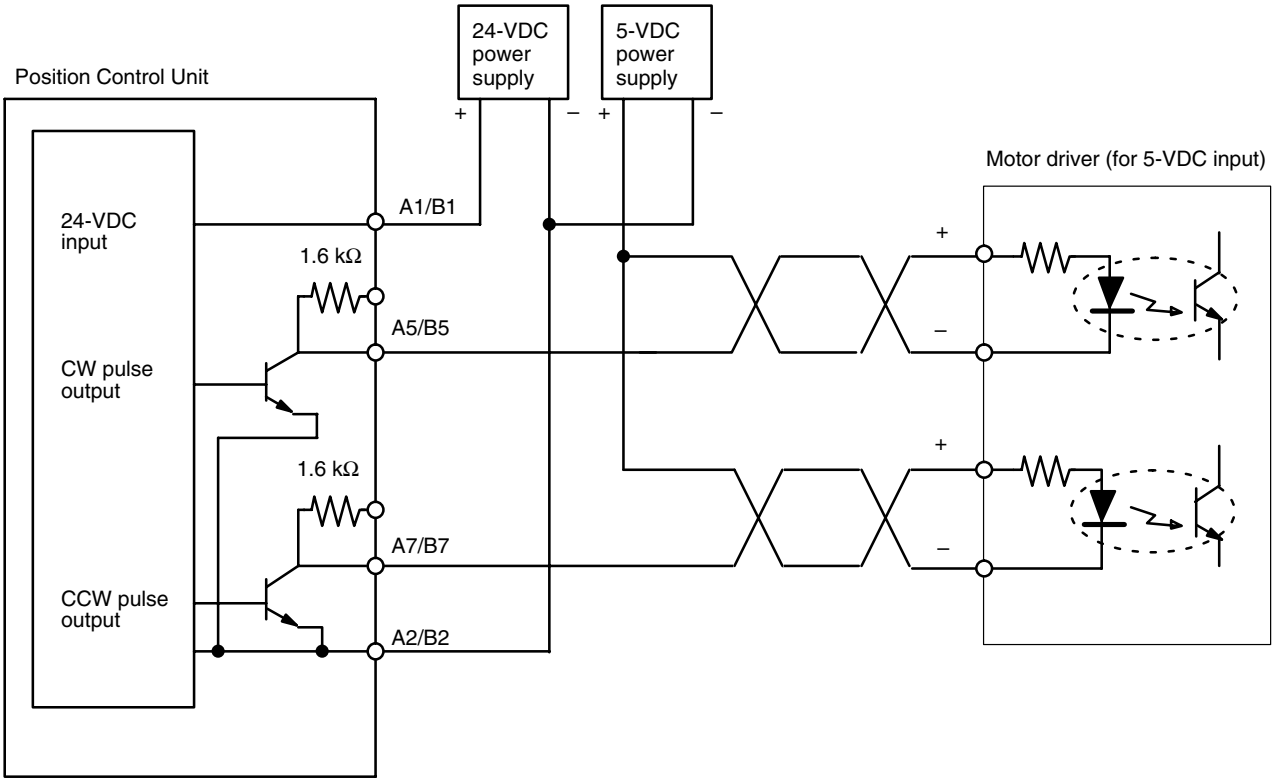

Outputting Pulse and Direction Signals

In this example, a 5-VDC input motor is used for outputting pulse and direction signals.

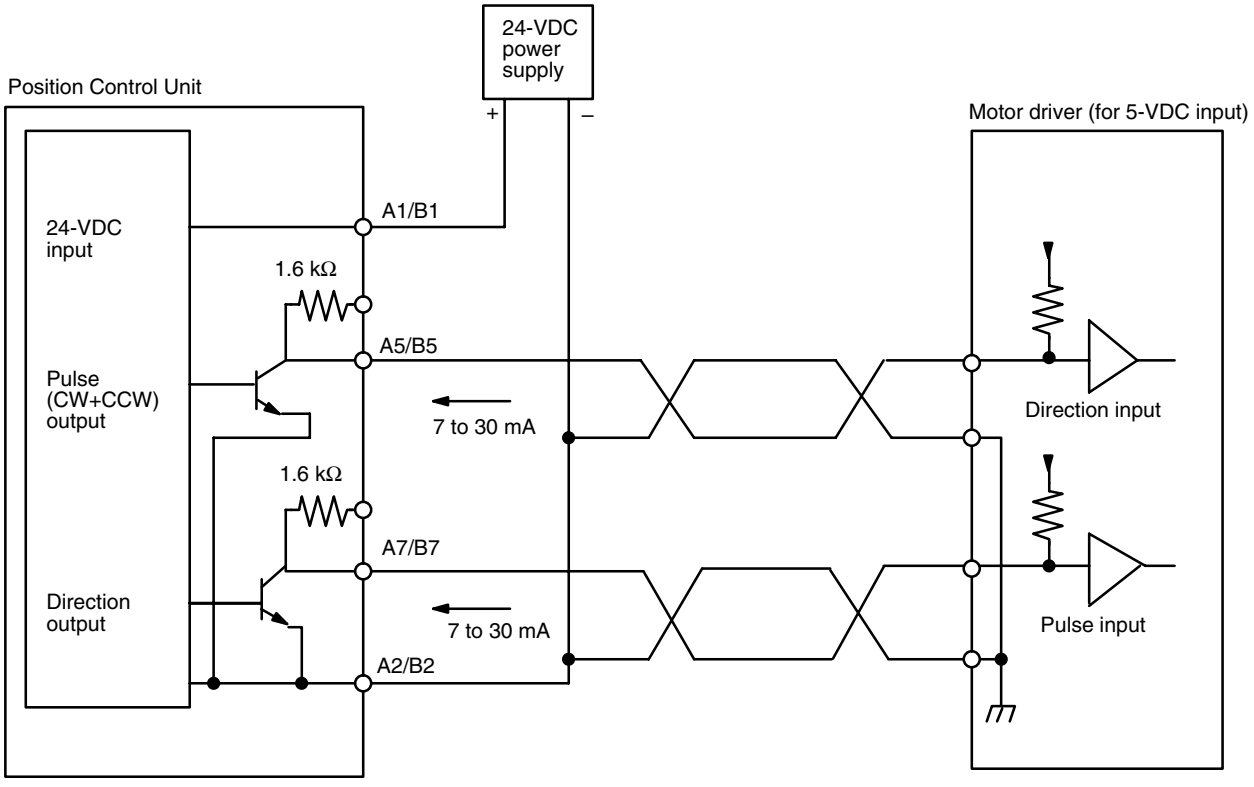

When voltage-level output is used, the level is L for output ON, and H for output OFF.

Error Counter Reset Output

There is approximately 20 ms of output when origin search is completed in modes 1 or 2.

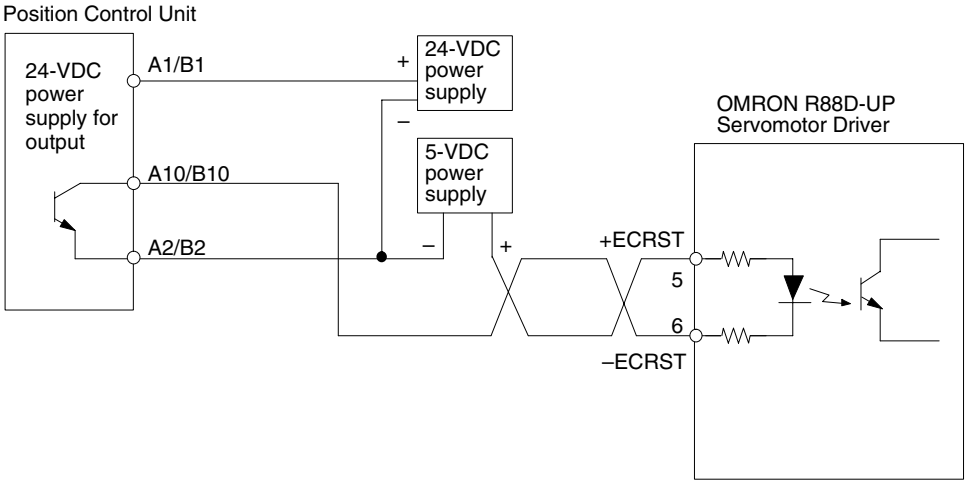

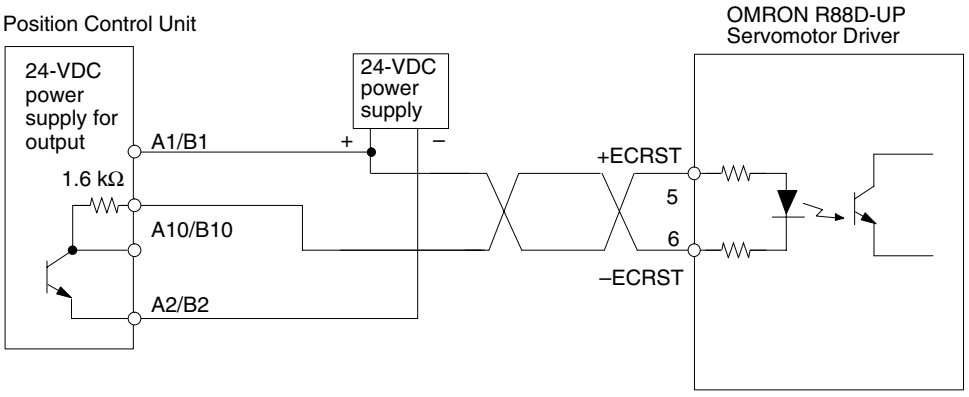

2-4-2 Input Connection Examples

Caution If the switching capacity is too low it may cause damage to the switch. Connect a switch with a switching capacity of at least 5 mA for each input.

With N.C. inputs, be sure to connect a power supply for unused terminals and turn them on.

This section shows examples of connecting interrupt, emergency stop, and CW/CCW limit input signals.

The input section has both N.O. and N.C. inputs. Either can be used depending on the axis parameter settings. For details regarding axis parameters, refer to *4-3 Axis Parameters Area*.

Name	Connection type
External interrupt input signal	N.O.
Emergency stop input signal	N.C.
Origin proximity input signal	N.C. or N.O.
CW limit input signal	N.C. or N.O.
CCW limit input signal	N.C. or N.O.

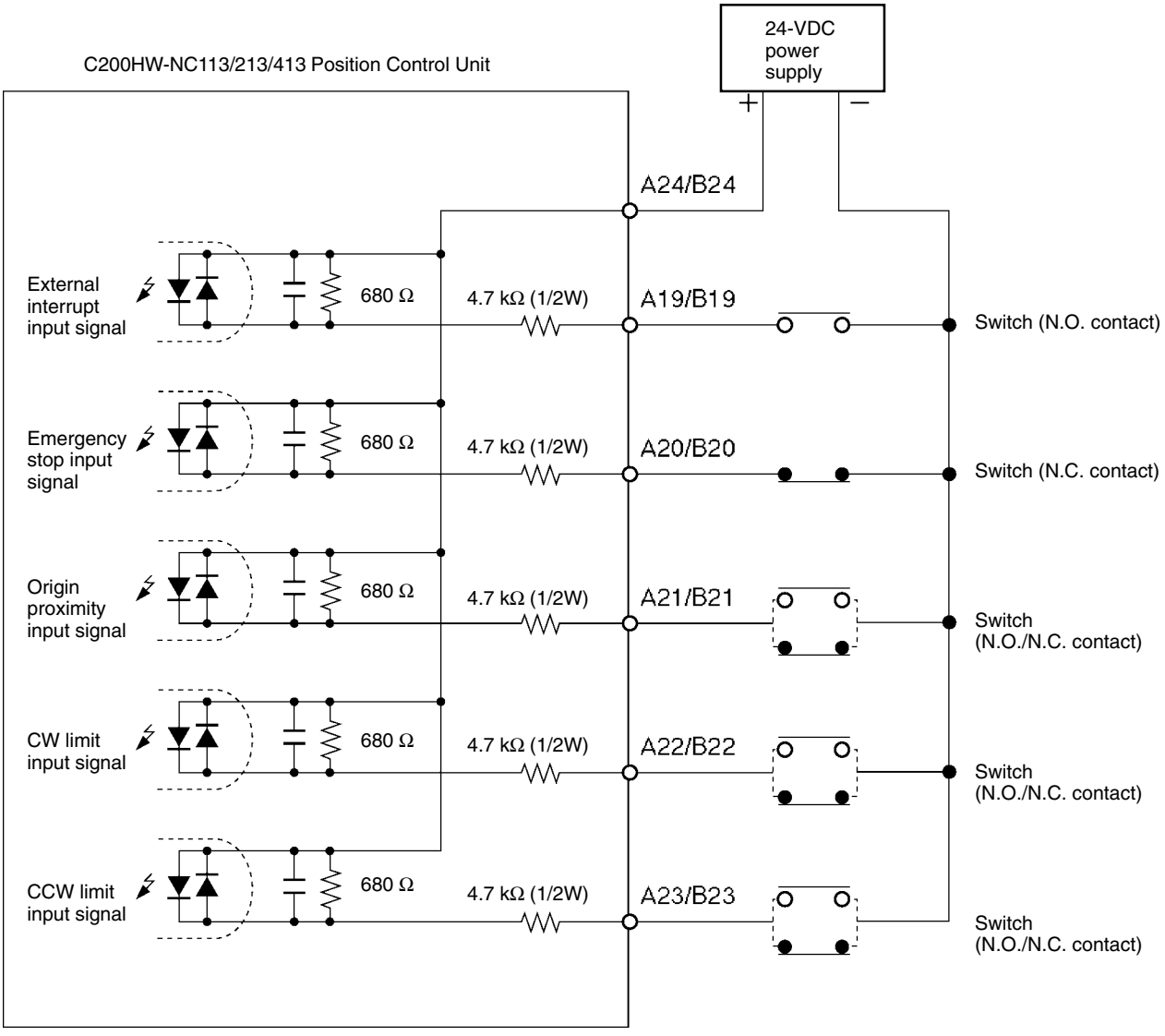

2-4-3 Connecting Origin and Positioning Completed Input Signals

The examples below show input connections when open collector sensor output and the encoder's Z-phase line driver output are used.

Origin Input Signal (24 V)

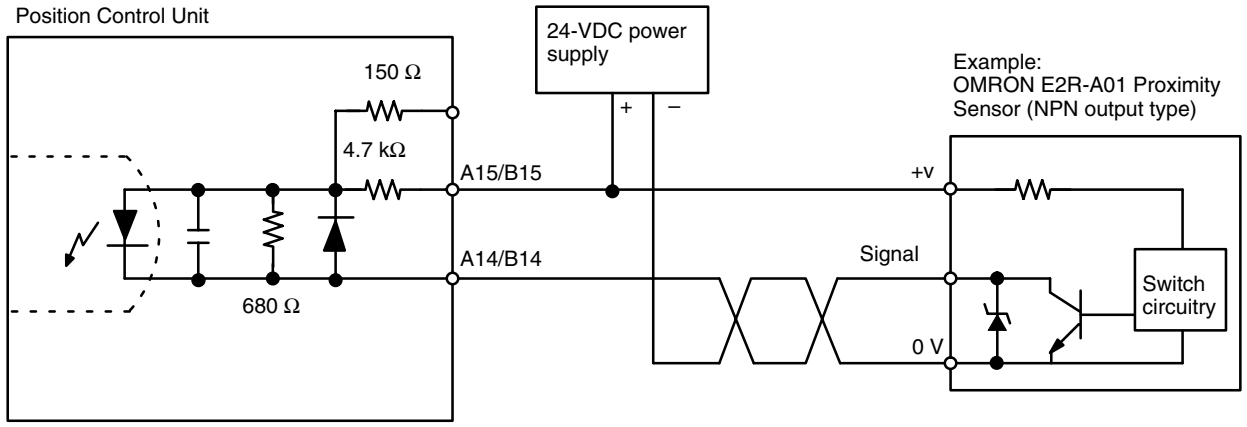

Origin Input Signal (5 V) (Line Driver Input)

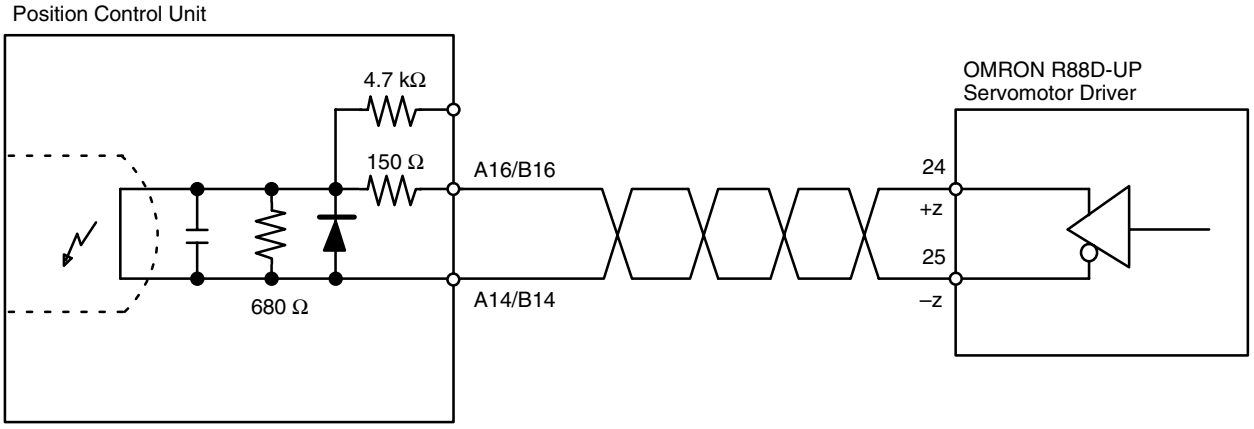

Positioning Completed Input Signal

The positioning completed input signal is also used as an origin search completed signal in modes 2 and 3. Adjust the setting of the servomotor driver so that this signal always turns off while the servomotor is operating, and on when the motor is stopped.

An origin search operation cannot be completed unless the positioning completed input signal turns ON after positioning has been completed.

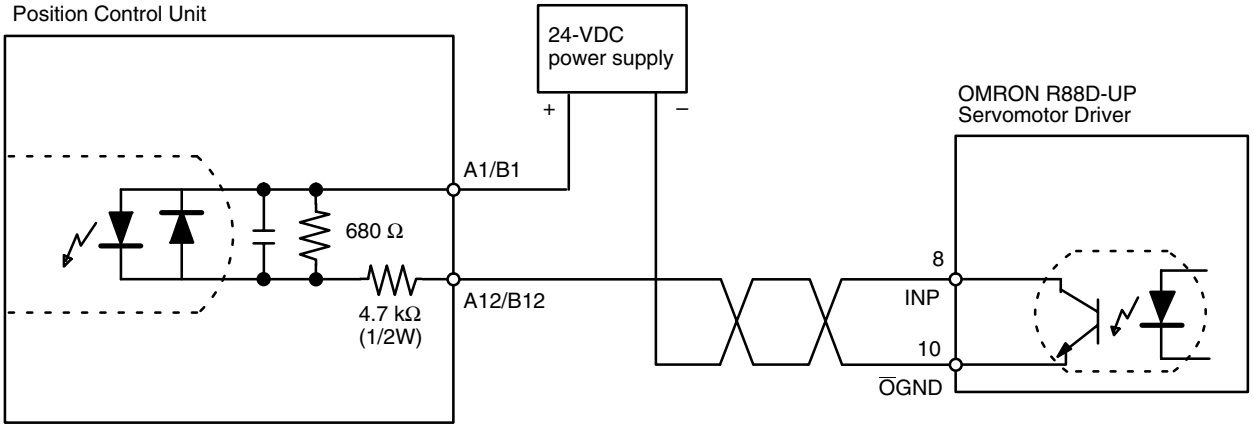

2-4-4 Wiring Precautions

Operational errors such as dislocation can occur in most electronic control devices if they are subjected to electronic noise from nearby power lines or loads. Recovery from such errors is usually very difficult and time consuming. To avoid such noise-generated operational errors and improve system reliability, always observe the following precautions in wiring the system.

Be sure to use the sizes and materials indicated in the specifications when connecting power lines and cables.

Power lines (e.g., AC power supply, motor power line) and control lines (e.g., pulse output lines, external I/O signal lines) must be wired separately. Never put these lines into the same duct or make them into a single bundle.

- Attach a 1-μF multi-layer ceramic capacitor to the pulse output power supply to improve noise resistance.
- Use shielded cable for control lines.
- Connect the shielded cable to the frame ground at both the Position Control Unit and the driver.
- Attach a surge absorber to all inductive loads, such as relays, solenoids, and solenoid valves.

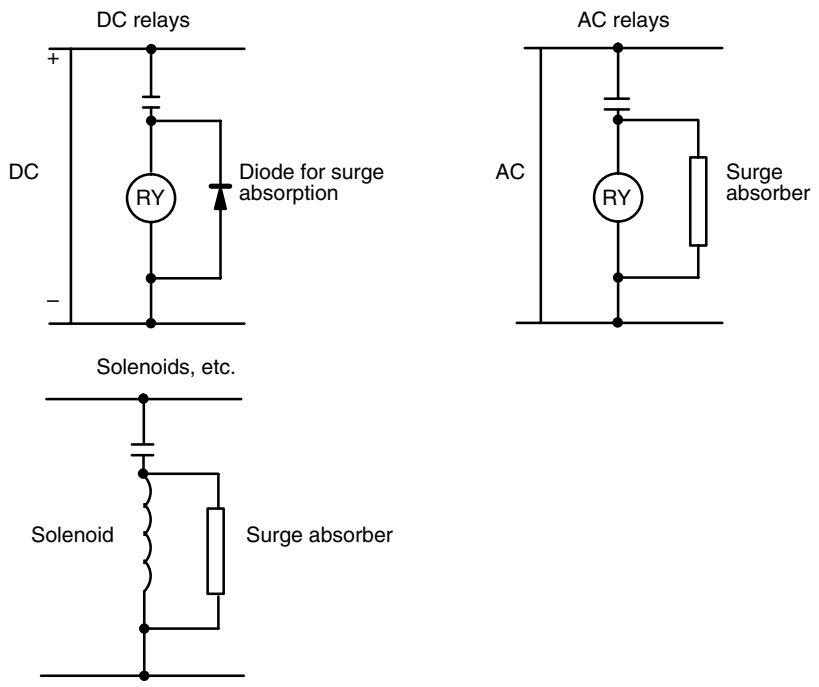

Note Connect the diode and surge absorber as close as possible to the relay. Use a diode capable of withstanding a voltage five times higher than the circuit voltage.

- Insert a noise filter into the power supply inlet if noise enters the power line (e.g., when it is connected to the same power supply as an electric welder or an electric spark machine or when there is any supply generating high frequency noise).
- Use No. 3 or greater grounding contacts and the thickest possible wire, greater than 1.25 mm^2.
- Twisted-pair cable is recommended for power lines.

2-5 Connections in Each Operating Mode

This section provides examples of wiring the X and Y axes. If the Y and U axes are also to be used, check the connector pin numbers in *2-3 External I/O Circuitry* and wire them in the same way.

Note
1. Be sure to connect a power supply for unused N.C. input terminals and turn them on.
2. Use shielded wire for connecting to stepping motor drivers and servomotor drivers. Connect the shielded cable to an FG at both the Position Control Unit and the driver.

Example 1: Mode 0 Connection

This example shows the use of a stepping motor with an external sensor signal connected to the origin input signal.

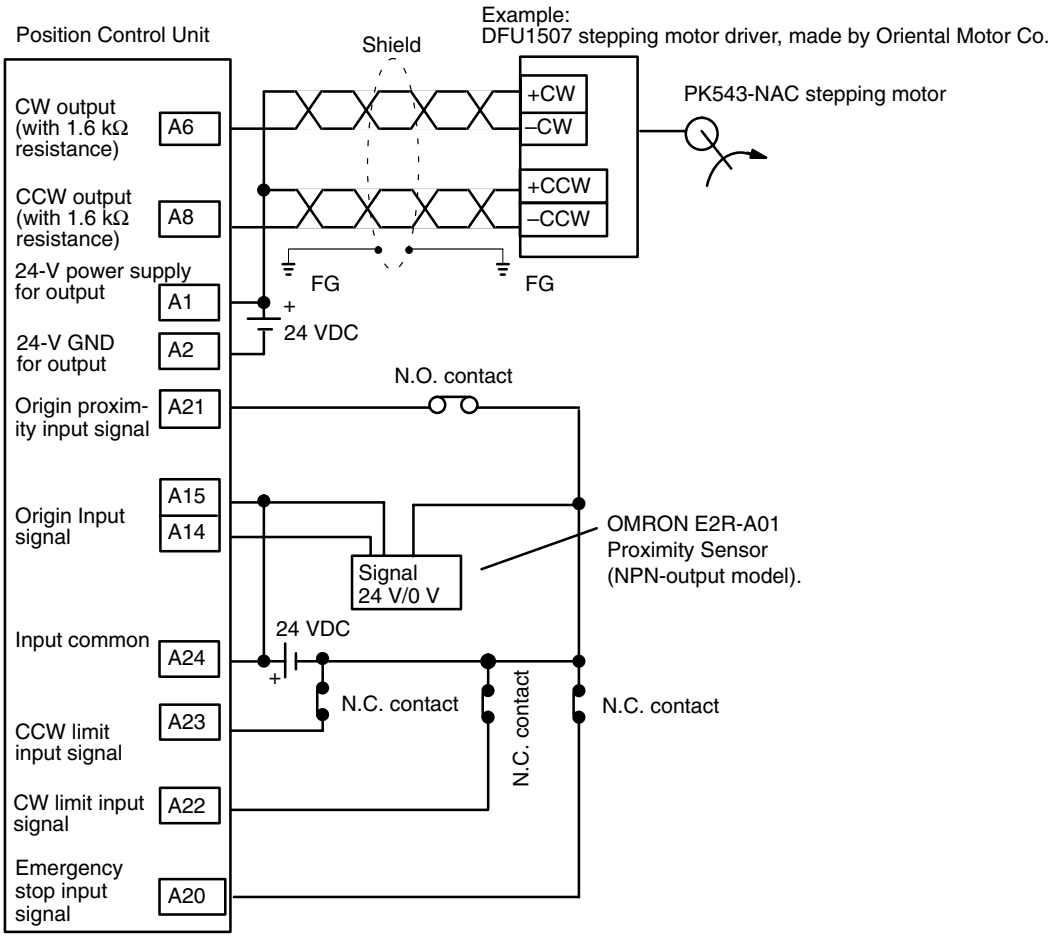

Parameter Setting Example

	15			0
m+4	0	0	6	0
m+5	0	1	0	0

Word	Bits	Setting	Contents
m+4	00	0	CW/CCW output
	01 to 03	0	---
	04	0	Limit input: N.C. contact
	05	1	Origin proximity input signal: N.O. contact
	06	1	Origin input signal: N.O. contact
	07	0	Pulse output stopped with emergency stop input signal.
	08 to 15	0	---
m+5	00 to 03	0	Mode 0
	04 to 07	0	Reverse mode 1
	08 to 11	1	Takes origin input signal after origin proximity input signal is received.
	12 to 15	0	Search direction: CW

Note “m” is the beginning DM word allocated when the unit number is set.

Origin Search Operation

The origin search operation is completed with the rising edge of the origin input signal after the rising edge of the origin proximity input signal.

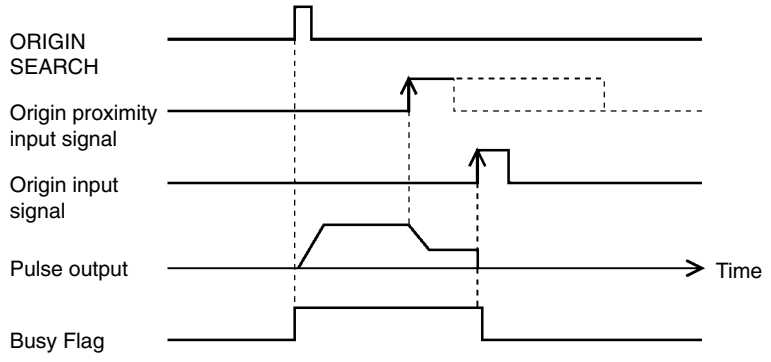

Example 2: Mode 1 Connection

In this example, a servomotor driver is employed and the Z-phase of the encoder is connected to the origin line driver input terminal and used as the origin input signal. An OMRON U-Series Servomotor Driver is used.

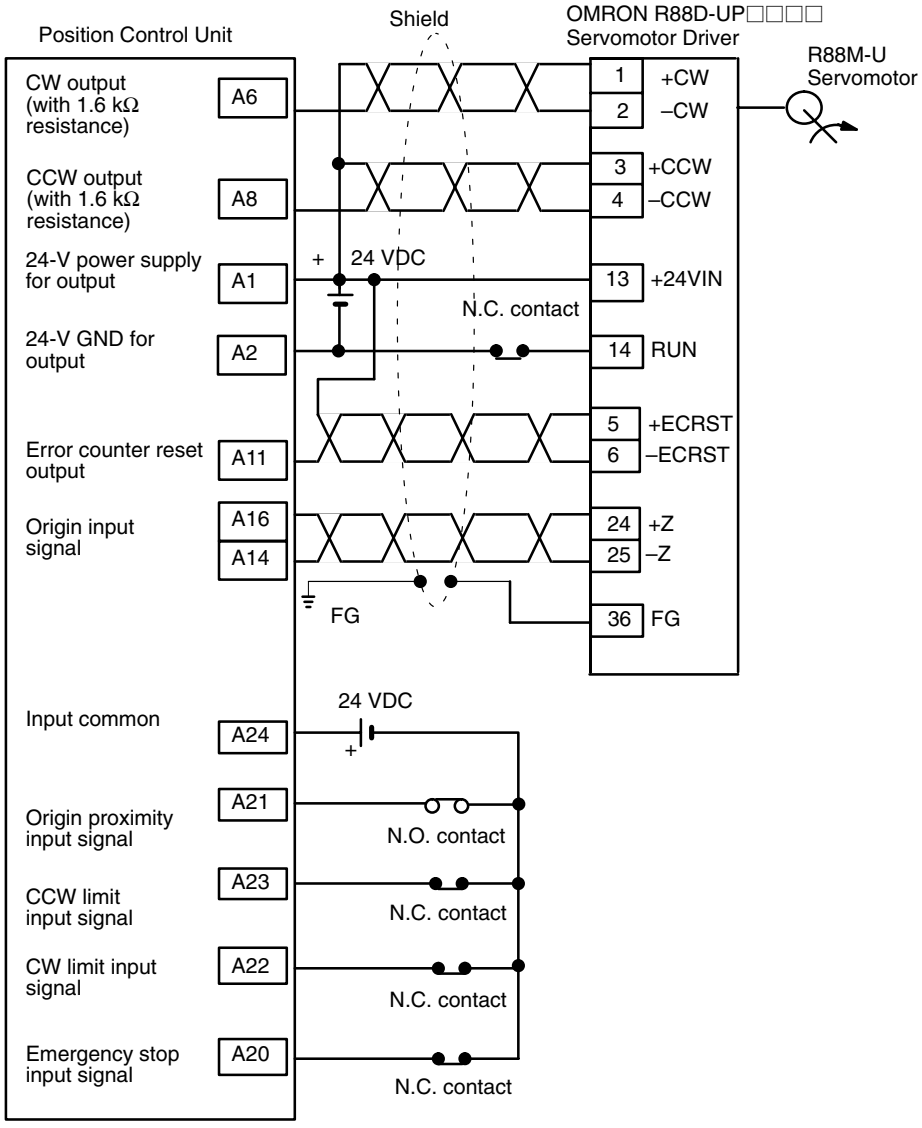

Parameter Setting Example

This example is explained in terms of the X axis. For more details, refer to *4-3 Axis Parameters Area*.

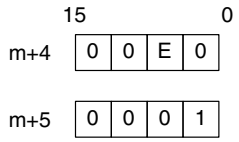

Word	Bits	Setting	Contents
m+4	00	0	CW/CCW output
	01 to 03	0	---
	04	0	Limit input: N.C. contact
	05	1	Origin proximity: N.O. contact
	06	1	Origin input signal: N.O. contact
	07	1	Pulse output stopped by emergency stop input signal; error counter reset signal output.
	08 to 15	0	---
m+5	00 to 03	1	Mode 1
	04 to 07	0	Reverse mode 1
	08 to 11	0	Takes origin input signal after rising and falling edge of origin proximity signal.
	12 to 15	0	Motor direction: CW

Note “m” is the beginning DM word allocated when the unit number is set.

Origin Search Operation

The origin search operation stops on the rising edge of the first Z-phase signal after the origin proximity signal has turned from ON to OFF, and after deceleration has ended.

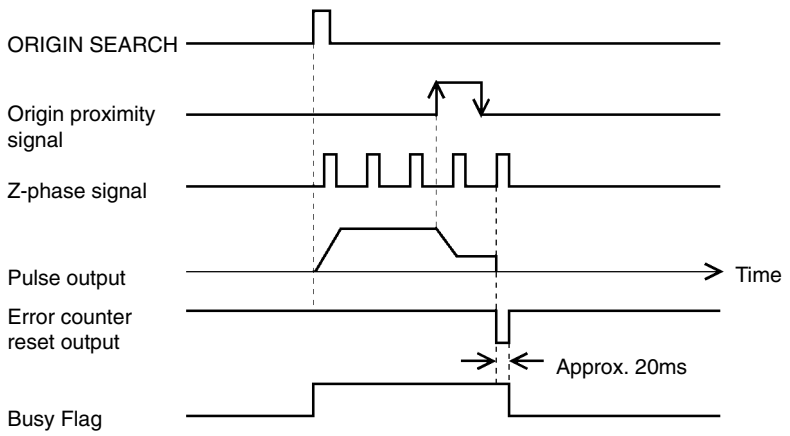

Example 3: Mode 2 Connection

In this example, as in example 2, a servomotor driver is employed and the Z-phase of the encoder is connected to the origin line driver input terminal and used as the origin input signal. An OMRON U-Series Servomotor Driver is used.

In contrast to mode 1, the positioning completed signal (INP) of the servomotor driver serves as both the origin search completed and the positioning completed signals.

Set the servomotor driver so that the positioning completed signal turns OFF during motor operation and ON while the motor is stopped.

An origin search operation cannot be completed if the positioning completed input signal from the servomotor driver is not properly connected or set.

Note If the positioning monitor time is set to 0, the origin search operation will wait until the positioning completed signal turns ON but other operations, such as jogging and memory operation, will ignore the positioning completed signal.

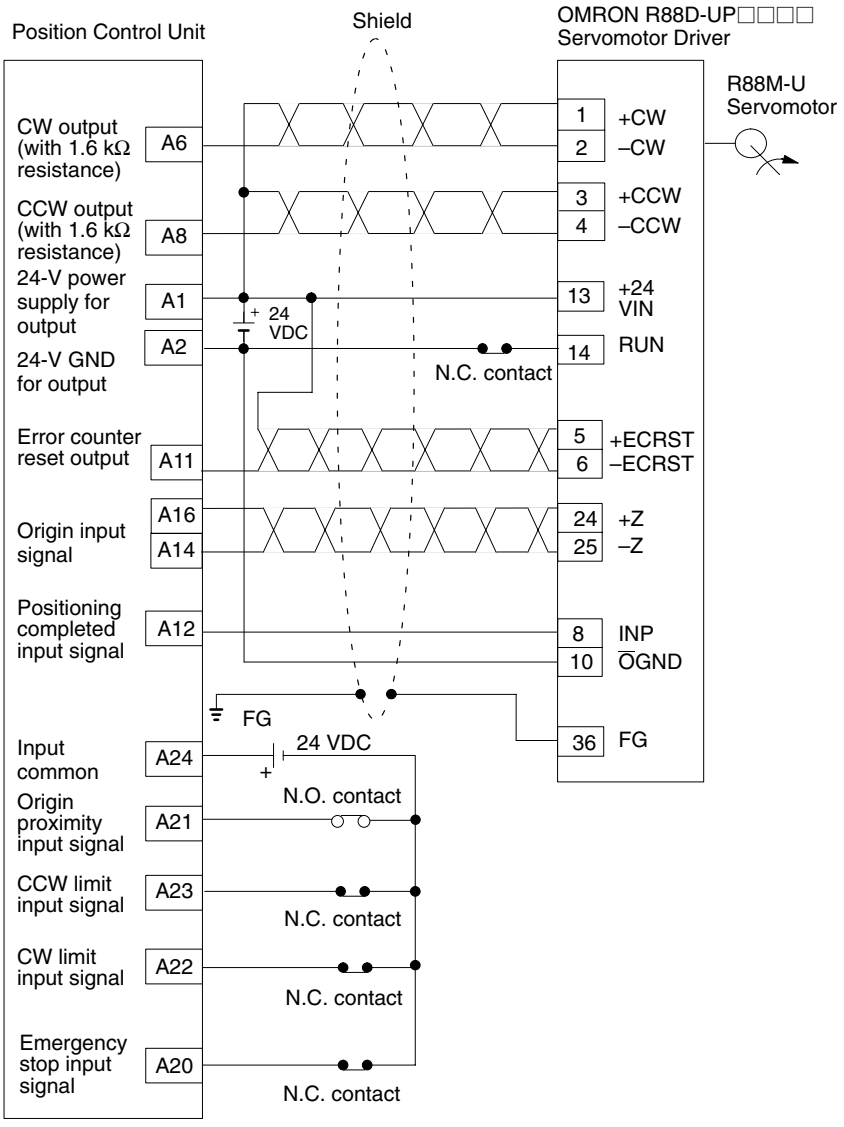

Parameter Setting Example

This example is explained in terms of the X axis. For more details, refer to *4-3 Axis Parameters Area*.

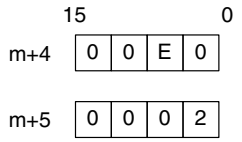

Word	Bits	Setting	Contents
m+4	00	0	CW/CCW output
	01 to 03	0	---
	04	0	Limit input: N.C. contact
	05	1	Origin proximity: N.O. contact
	06	1	Origin input signal: N.O. contact
	07	1	Pulse output stopped by emergency stop input signal; error counter reset signal output.
	08 to 15	0	---
m+5	00 to 03	2	Mode 2
	04 to 07	0	Reverse mode 1
	08 to 11	0	Takes origin input signal after rising and falling edge of origin proximity input signal.
	12 to 15	0	Search direction: CW

Note "m" is the beginning DM word allocated when the unit number is set.

Origin Search Operation

The origin search operation stops on the rising edge of the first Z-phase signal after the origin proximity signal has turned from ON to OFF, and after deceleration has ended. The Busy Flag turns OFF with the positioning completed signal.

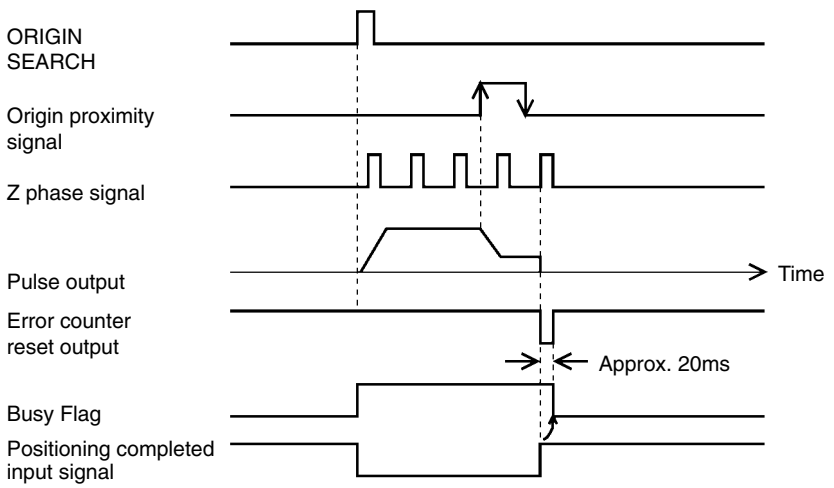

Example 4: Mode 3 Connection

This is an example using the origin adjustment function of OMRON's Servomotor Driver. The positioning completed signal (INP) is used as both the origin search completion and the positioning completed signal.

Be sure to adjust the settings of the servomotor driver so that the positioning completed signal is OFF when the motor is operating and ON when it is stopped.

Note If the positioning monitor time is set to 0, the origin search operation will wait until the positioning completed signal turns ON but other operations, such as jogging and memory operation, will ignore the positioning completed signal.

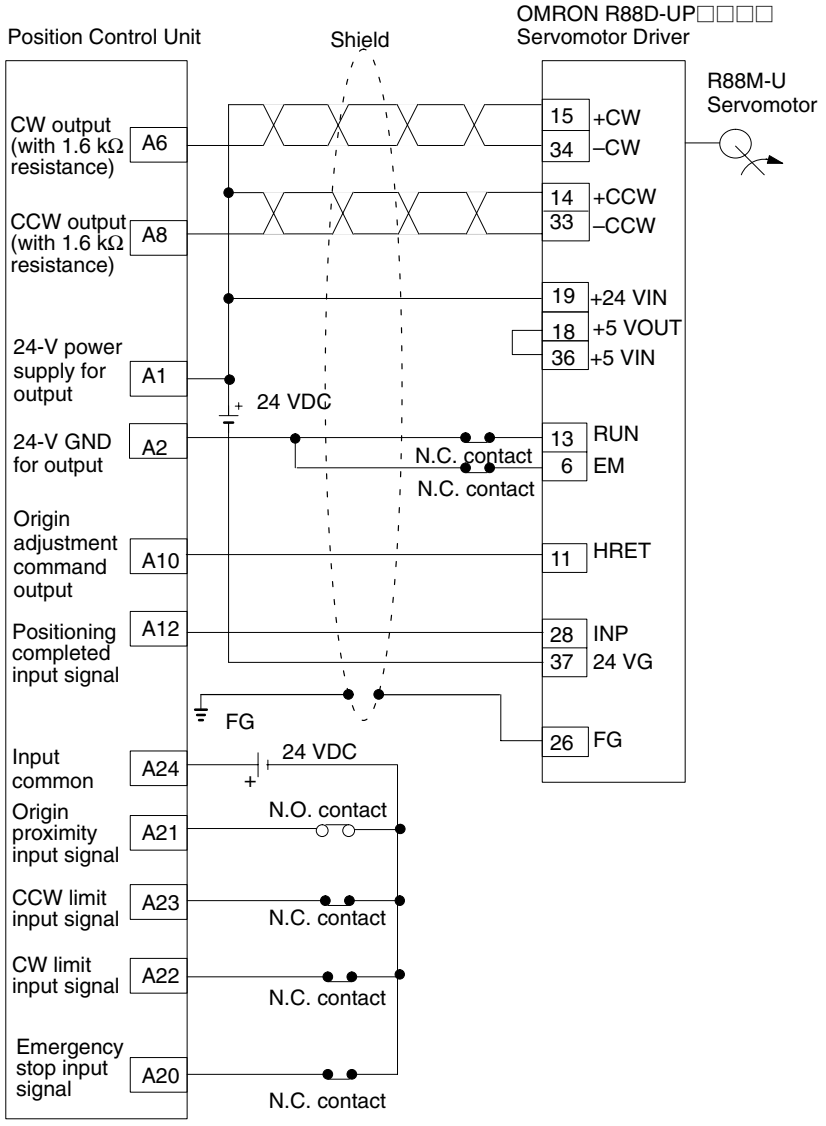

Parameter Setting Example

This example is explained in terms of the X axis. For more details, refer to *4-3 Axis Parameters Area*.

	15			0
m+4	0	0	6	0
m+5	0	0	0	3

Word	Bits	Setting	Contents
m+4	00	0	CW/CCW output
	01 to 03	0	---
	04	0	Limit input: N.C. contact
	05	1	Origin proximity: N.O. contact
	06	1	Origin input signal: N.O. contact
	07	0	Pulse output stopped by emergency stop input.
	08 to 15	0	---
m+5	00 to 03	3	Mode 3
	04 to 07	0	Reverse mode 1
	08 to 11	0	Takes origin input signal after rising and falling edge of origin proximity signal.
	12 to 15	0	Search direction: CW

Note “m” is the beginning DM word allocated when the unit number is set.

Origin Search Operation

The origin search operation begins after the origin proximity signal has risen and fallen, and the origin adjustment command is output to the servomotor driver after deceleration has ended. The positioning completed signal is then input from the servomotor driver and origin search ends. The driver internally executes the error counter reset and stops automatically with the first Z-phase input after it has received the origin adjustment command.

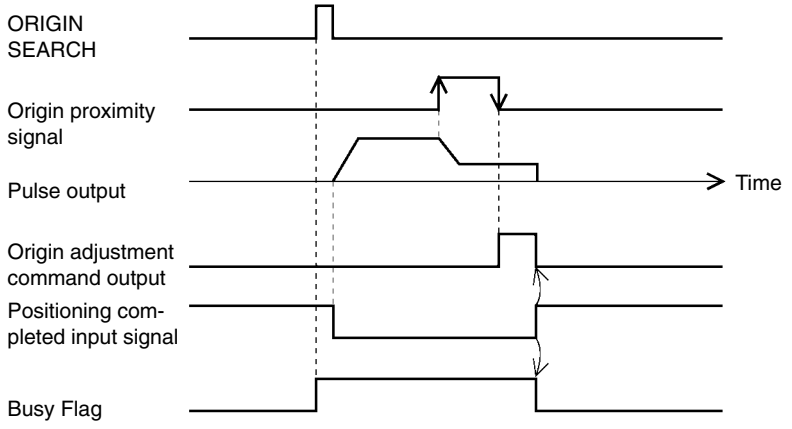

2-6 Connection of Unused Axes

This section provides a connection example for the C200HW-NC213/NC413 in applications where not all axes are used.

2-6-1 C200HW-NC213 – X Axis Only

Based on *Example 2: Mode 1 Connection* on page 39, the following example shows the external I/O connections for the C200HW-NC213 when only the X axis (and not the Y axis) is used. In this example, the limit input signals for both axes are set to N.C. contacts. With the C200HW-NC413, if the Z axis is used and the U axis is not used, the connection will be the same with X and Y replaced by Z and U respectively.

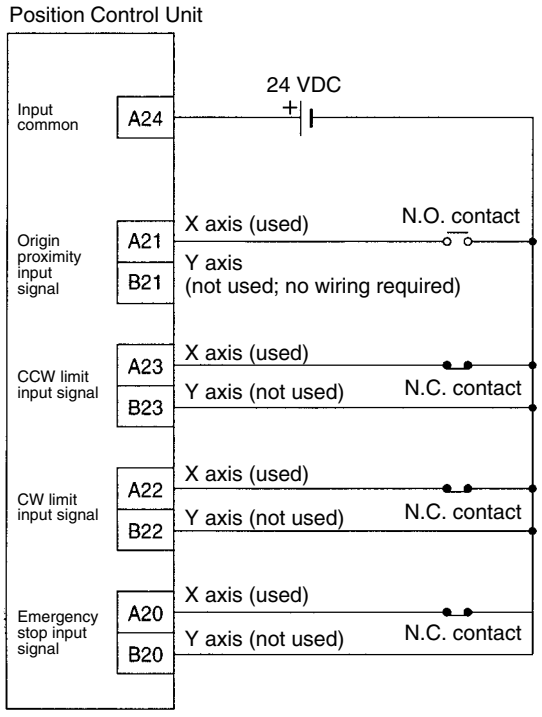

When there is an unused axis, connect the emergency stop input signal (N.C. contact) and the CW/CCW limit input signals (N.C./N.O. switchable) for that axis so that they are ON. If the parameters are at their default settings, the CW/CCW limit input signals are N.C. contact inputs and so connect an input power supply and keep power ON.

If the emergency stop input signal and the CW/CCW limit input signals for an unused axis are not ON, a sensor input error (error codes 6000, 6100, or 6101) will be generated for the axis, and the ERR and SENS indicators as well as the LED indicator for the axis will light or flash. The used axis, however, will continue to operate normally even if an error is generated for the unused axis.

Note If the CW/CCW limit input signals for the unused axis are set to N.O contacts using the parameter settings, it is not necessary to wire the CW/CCW limit inputs. For details, refer to *4-3 Axis Parameters* and *4-8 Setting Data for Unused Axes*.

2-7 Servo Relay Unit

- Wiring requirements can be reduced by connecting Servo Drivers and PCUs via a Servo Relay Unit, which provide a connector and a terminal block in one Unit.

- The connecting cable and the type of Servo Relay Unit required will depend on the Servo Driver model connected. Refer to the tables under *Connection Compatibility* given below.

Connections Diagram

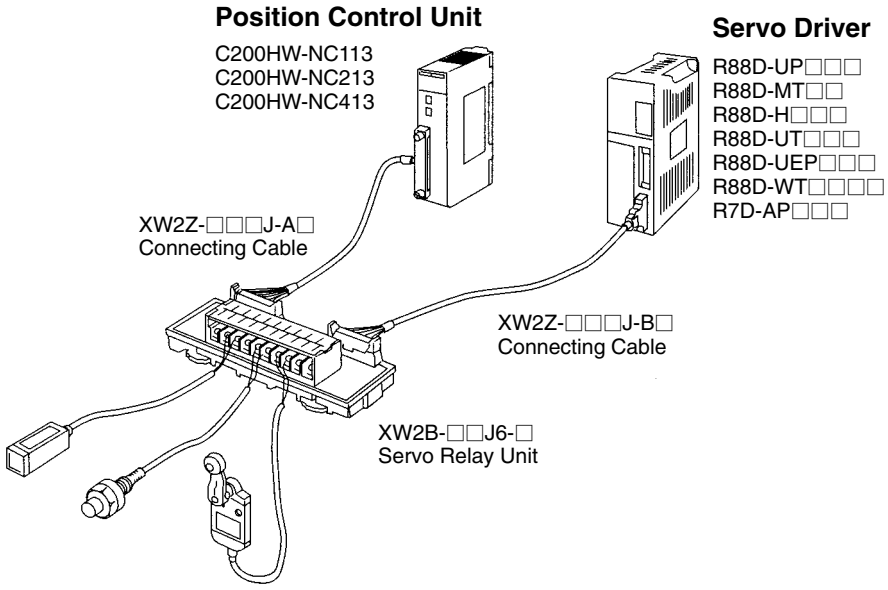

Connection Compatibility

PCU	Cable connected to PCU	Servo Relay Unit	Cable connected to Servo Relay Unit	Servo Driver
C200HW-NC113	XW2Z-□□□J-A6	XW2B-20J6-1B (for C200H-NC112)	XW2Z-□□□J-B1	R88D-UP□□□
			XW2Z-□□□J-B2	R88D-MT□□□
			XW2Z-□□□J-B3	R88D-H□□□
			XW2Z-□□□J-B4	R88D-UT□□□
				R88D-WT□□□□
	XW2Z-□□□J-A8	XW2B-20J6-1B	XW2Z-□□□J-B5	R88D-UEP□□□
				R7D-AP□□□
C200HW-NC213 C200HW-NC413	XW2Z-□□□J-A7	XW2B-40J6-2B (for C200H-NC211)	XW2Z-□□□J-B1	R88D-UP□□□
			XW2Z-□□□J-B2	R88D-MT□□□
			XW2Z-□□□J-B3	R88D-H□□□
			XW2Z-□□□J-B4	R88D-UT□□□
				R88D-WT□□□□
	XW2Z-□□□J-A9	XW2B-40J6-2B	XW2Z-□□□J-B5	R88D-UEP□□□
				R7D-AP□□□

- The cable length for PCU Connecting Cables is indicated in the "□□□".
  050: 0.5 m
  100: 1 m
- The cable length for Servo Driver Connecting Cables is indicated in the "□□□".
  100: 1 m
  200: 2 m
- When using the C200HW-NC413, 2 Servo Relay Units and 2 PCU Connecting Cables are required.
- When using in combination with the C200HW-NC213 (2-axis control), 2 Servo Driver Connecting Cables are required.
- When using in combination with the C200HW-NC413 (4-axis control), 4 Servo Driver Connecting Cables are required.

SECTION 3
Getting Started

This section is directed to first-time users of the Position Control Unit (PCU). It explains how to use the RELATIVE MOVEMENT command employing the direct operation method, and provides examples of how to use a stepping motor. In order to keep the explanations simple, the minimum system required for operating the motor is used, and operations from the Programming Console are described.

In general, using a PCU requires the creation of ladder programs incorporating various kinds of data, status information, external input information, and so on, but here the explanations are aimed only at how to operate the motor. For details regarding data configuration and allocation, refer to *Section 4 Data Areas*.

3-1 Basic Operations 48
3-2 System Configuration and Wiring 49
3-3 Setting Data and Starting 51

3-1 Basic Operations

Outline

The examples provided in this section show how to operate a stepping motor using the direct operation method. It is assumed that a C200HX/HG/HE CPU Unit and a C200HW-NC113 PCU are employed, and the PCU's factory settings are used for the parameters.

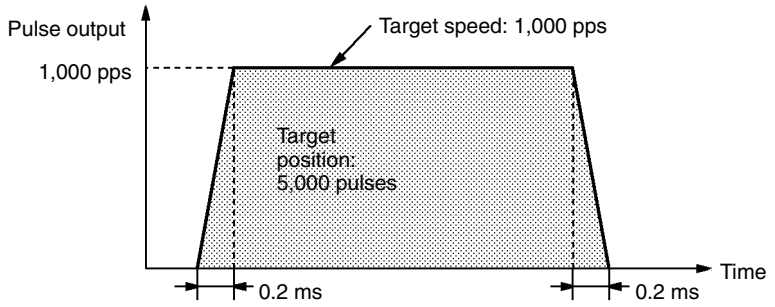

The stepping motor rotates for approximately five seconds in the clockwise (CW) direction (i.e., in the direction that increments the present position), and then stops.

Use the Programming Console for the required settings and the START command. First set the data required for direct operation and then operate the motor by turning the RELATIVE MOVEMENT command bit from OFF to ON.

The set values for acceleration and deceleration times and the actual acceleration and deceleration times are related to the axis parameters area's maximum speed and actual target speed set values. For details, refer to *Appendix B Estimating Times and Pulses for Acceleration/Deceleration*.

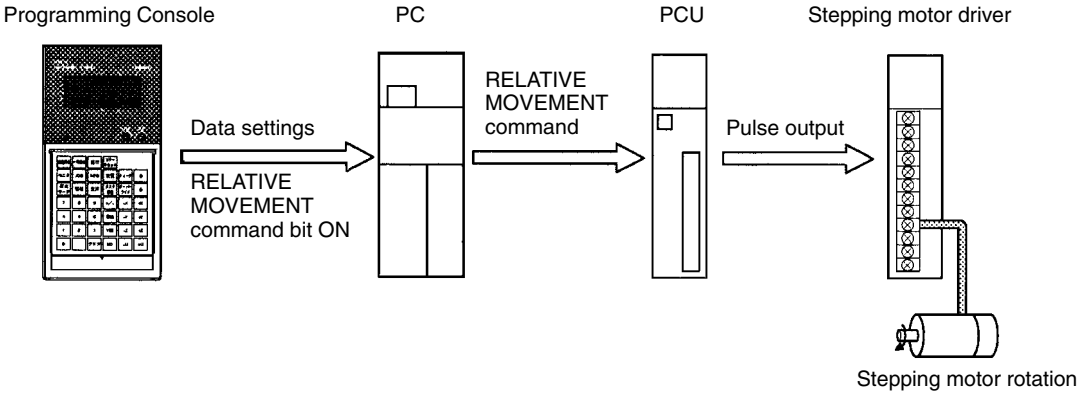

The following data must be set for this example.

- Position: 5,000 pulses
- Speed: 1,000 pps
- Acceleration time: 100 ms (factory setting)
- Deceleration time: 100 ms (factory setting)

Set the position and speed in the operating data area which is set by the common parameter area. For the acceleration and deceleration times, use the factory settings saved to the PCU.

For more details regarding the common parameter area and the operating data area, refer to *Section 4 Data Areas*.

Operating Procedure

Use the following procedure to operate the motor.

1, 2, 3...

1. Mount all of the Units and connect the Programming Console. (Refer to *3-2 System Configuration and Wiring* and also refer to the *C200HX/HG/HE PCs Installation Guide*.)

2. Set the unit number for the PCU. (Refer to *3-2 System Configuration and Wiring*.)
3. Wire the PCU's external inputs and wire the PCU to the stepping motor. (Refer to *3-2 System Configuration and Wiring*.)
4. Turn on the power supply and set the common parameter area. (Refer to *3-3 Setting Data and Starting*.)
5. Turn on the power again or restart. (Refer to *3-3 Setting Data and Starting*.)
6. Set the position, the speed, the acceleration time number, and the deceleration time number. (Refer to *3-3 Setting Data and Starting*.)
7. Start. (Refer to *3-3 Setting Data and Starting*.)

3-2 System Configuration and Wiring

(1) System Configuration

For this operation, use the configuration shown in the following diagram. In this example only the motor will rotated, without using the mechanical system.

For the purposes of this example, it is assumed that the CPU is mounted to the CPU Backplane and that the unit number is set to #0.

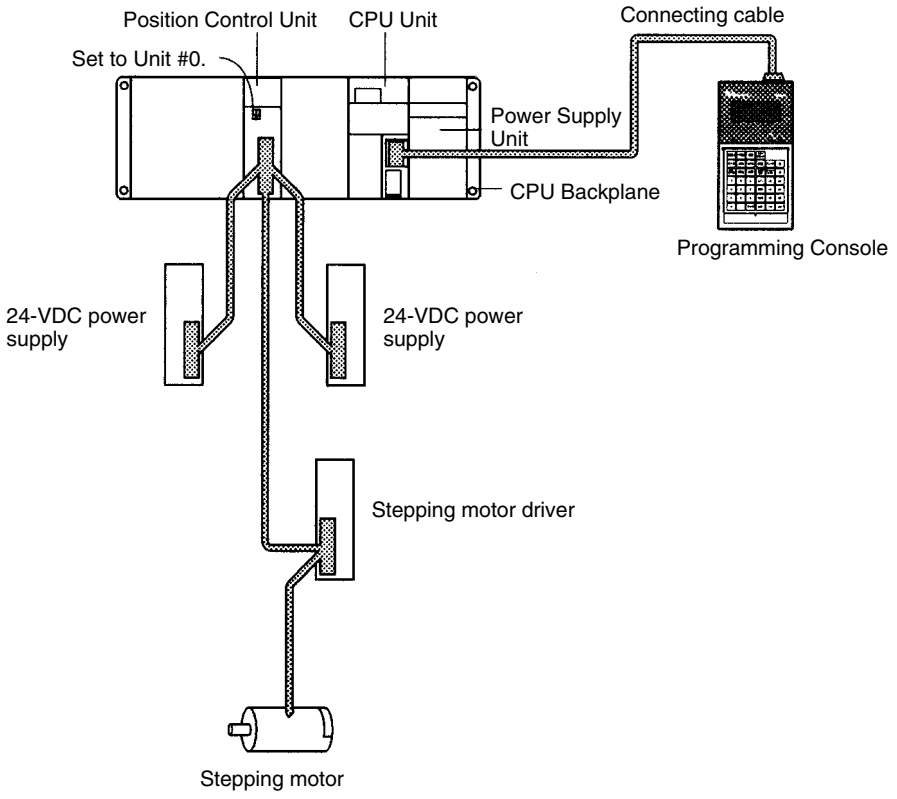

The following Units and devices are used in this example.

CPU Unit	SYSMAC C200HX/HG/HE
Position Control Unit	C200HW-NC113
Power Supply Unit	C200HW-PA204
CPU Backplane	C200HW-BC101
Programming Console	C200H-PRO27-E
Connecting cable	C200H-CN222
Stepping motor driver	DFU1507 (Oriental Motor Co.)
Stepping motor	PK543-NAC (Oriental Motor Co.)

(2) Rotary Switch Setting

Use the rotary switch on the front panel of the PCU to set the unit number (i.e., the machine No.).

MACHINE No.	0

For details regarding rotary switch settings, refer to *2-2 Components*.

(3) Wiring

Wire the system as shown in the following diagram. The CW limit input, CCW limit input, and emergency stop input are factory set as N.C. terminals, so short-circuit them.

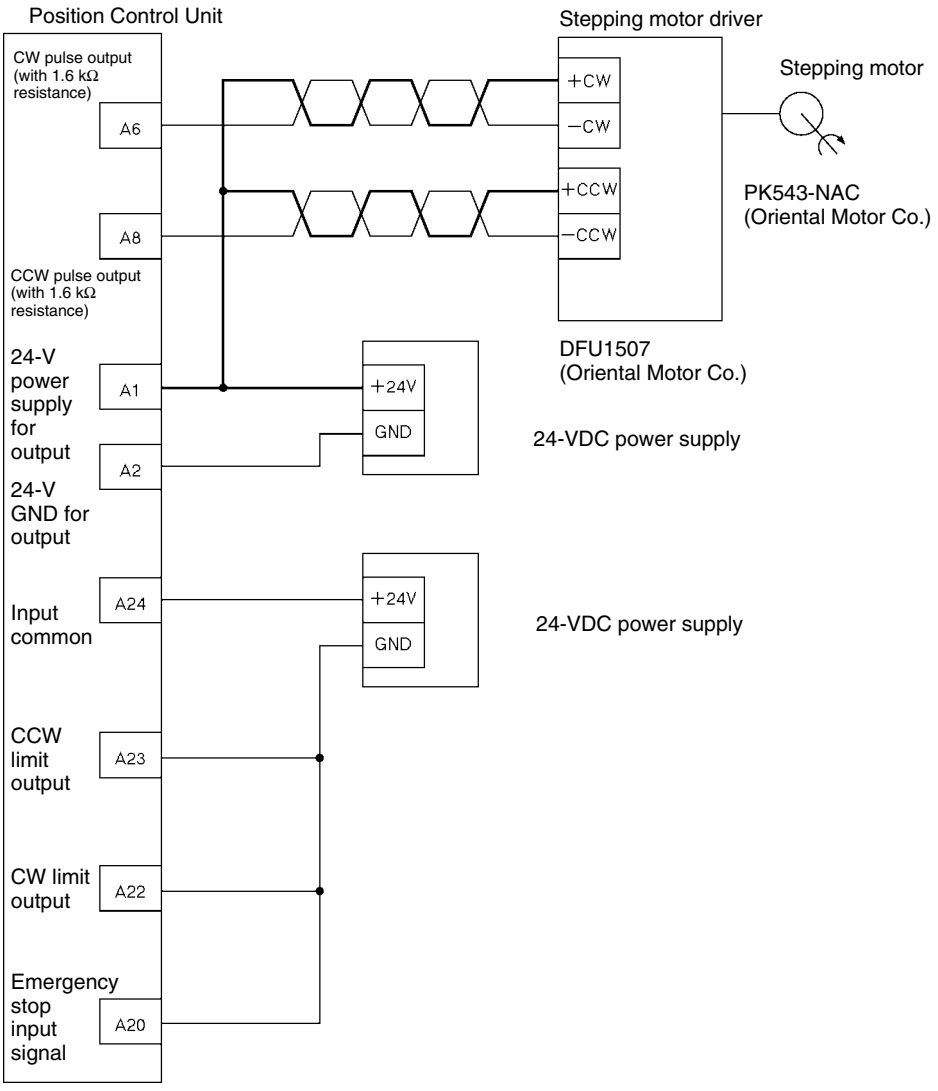

For details on connecting the PCU and the stepping motor driver, refer to the motor driver specifications and also *Section 2 Specifications and Wiring*.

3-3 Setting Data and Starting

(4) Setting the Common Parameters

The designation of the operating data area and the mounting position of the PCU are set in the common parameters. Use the Programming Console to write the following data to DM 1000 through DM 1002. The common parameters area is automatically specified when the PCU is set as Unit #0, and this data must be set.

DM 1000	0	0	0	D	The Data Memory (DM) area is used as the operating data area. Set the "D" for the DM area.
DM 1001	0	5	0	0	Set DM 0500 as the beginning word in the operating data area.
DM 1002	0	0	0	0	Set the PCU's mounting position as the CPU Backplane or the Expansion I/O Backplane. Use the parameters saved to the PCU.

(5) Powering-up Again or Restarting

After making the settings, either turn on the power again or restart (by turning AR 0100 from OFF to ON and then back OFF again). This will put the data that has been set in the common parameters into effect.

For details regarding the common parameters area settings, refer to *4-2 Common Parameters Area*.

(6) Setting the Operating Data Area

By a setting in the common parameter area, the beginning word of the operating data area has been set as DM 0500. Thus the words for the various data items are as follows:

- Position: DM 0507 and DM 0506
- Speed: DM 0508
- Acceleration/deceleration times: DM 0510

Setting Position Data (DM 0507: Leftmost; DM 0506: Rightmost)

Use the Programming Console to write the following data.

DM 0506	5	0	0	0	
DM 0507	0	0	0	0	Enter 5000 (pulses) in 4 digits BCD, divided into leftmost and rightmost.

Setting Speed Data (DM 0508)

Use the Programming Console to write the following data.

DM 0508	1	0	0	0	Enter 1000 (pps) in 4 digits BCD.

Setting Acceleration/Deceleration Times (DM 0510)

Use the Programming Console to write the following data.

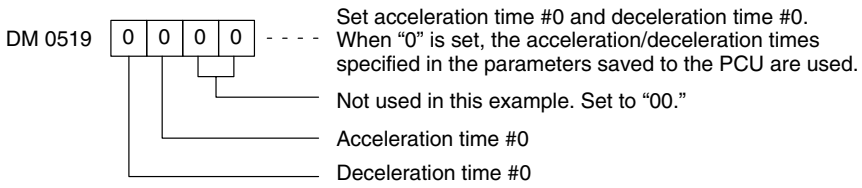

- For details regarding the operating data area, refer to *4-5 Operating Data Area.*
- In this example, the direct operation method is used. For details regarding direct operation, refer to *Section 7 Direct Operation*.

(7) Starting

Starting is executed by turning ON the RELATIVE MOVEMENT command bit in the operating memory area (IR area).

The RELATIVE MOVEMENT command is allocated to bit 10004 in the IR area. Use the Programming Console to turn this bit from OFF to ON.

The operating memory area is the area that is automatically specified when the PCU's unit number is set (Unit #0).

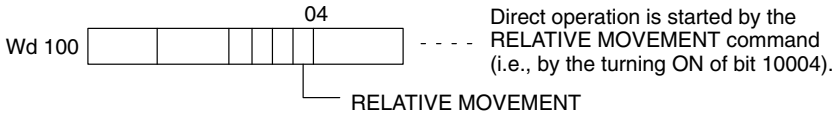

- For details regarding the operating memory area, refer to *4-4 Operating Memory Area*.
- In this example, the direct operation method is used. For details regarding direct operation, refer to *Section 7 Direct Operation*.

SECTION 4
Data Areas

This section provides information on the data areas used by the Position Control Unit.

4-1 Overall Structure 54
4-1-1 Flash Memory 55
4-1-2 Waiting for PCU Startup 56
4-1-3 Area Allocation 56
4-1-4 Data Areas 58
4-2 Common Parameters 74
4-3 Axis Parameters 76
4-3-1 Setting the Axis Parameters 76
4-3-2 Axis Parameters Details 77
4-3-3 Operation Modes 82
4-4 Operating Memory Area 83
4-5 Operating Data Area 89
4-6 Positioning Sequence Details 89
4-7 Setting Data With the SYSMAC-NCT Support Tool 93
4-8 Setting Data for Unused Axes 93
4-8-1 Settings Required for Unused Axes 93

4-1 Overall Structure

The Programmable Controller controls the Position Control Unit (PCU) by means of the data and memory areas shown below, employing data inputs and outputs during I/O refreshing and at other times.

For the purposes of this example, the explanation is provided in terms of a C200HW-NC413 PCU. For details regarding area allocation for NC113 and NC213 PCUs, refer to *4-1-3 Area Allocation*.

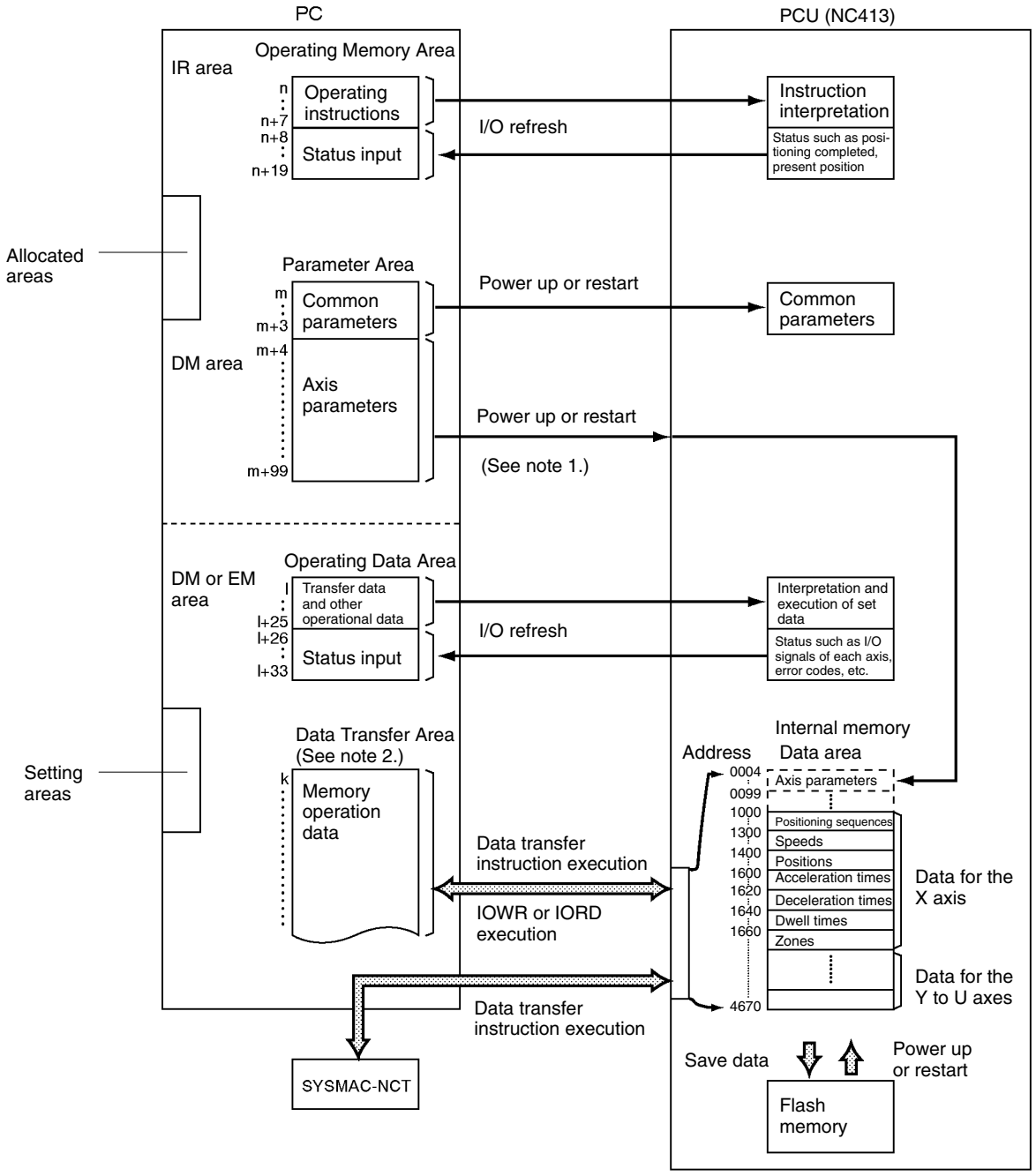

Note 1. The user can select by means of a common parameters setting whether data is to be transferred to the PCU for use, or whether the axis parameters saved at the PCU are to be used. (Refer to *4-2 Common Parameters Area*.)

2. The data transfer area is required for transferring data to the PCU (except when the SYSMAC-NCT Support Tool is used).

The PCU uses the data and memory areas shown in the following table.

Name	Contents	Reference
Parameter areas	Allocated to the PC's DM Area when the PCU's unit number is set. The parameters for controlling the PCU are set in the common parameter area, and the parameters for controlling individual axes are set in the axis parameters area. **Note** The settings in the axis parameters area must be made when the PCU is used. If these settings are not made, a common parameters error will be generated (error codes 0010 to 0013) and the PCU will not operate normally. Be sure to read *4-2 Common Parameters*.	*4-2 Common Parameters* *4-3 Axis Parameters*
Operating memory area	Allocated to the Programmable Controller's IR Area when the PCU's unit number is set. This area is used for outputting data such as operational commands to the PCU and for inputting the PCU status.	*4-4 Operating Memory Area*
Operating data area	This area is set by the common parameters area. It is used for inputting information related to the transfer of memory operation data, direct operation settings such as positions and speeds, and status data from the PCU.	*4-5 Operating Data Area*
Data transfer area	This area is set by the operating data area. When data is transferred between the Programmable Controller and the PCU, only that portion of the area employed for transferring the data is used.	---

m: 1000+100 x Unit No.

n: 100+10 x Unit No. [Unit No. ≦ 9]
400+10 x (Unit No. – 10) [Unit No. ≧ A(10)]

l: Beginning word address in DM or EM area, specified by the operating data area in the common parameter area.

k: Beginning word address in DM or EM area, specified by transfer source word or transfer destination word in operating data area.

4-1-1 Flash Memory

The contents of the PCU's internal memory are lost when the power supply is turned off or when the PCU is restarted. By saving the contents of the internal memory to the flash memory, parameters and other data can be retained.

- Axis parameters
- Positioning sequences
- Speeds
- Acceleration and deceleration times
- Dwell times
- Zones

Note The data for the number of axes for the particular Position Control Unit being used is all saved at once.

For details regarding saving data, refer to *5-7 Saving Data*.

Parameters and other data that have been saved to flash memory are read to the PCU's internal memory when the PCU is powered up or restarted. If the parameters or other data are corrupted at that time, a parameter destruction error (error code 0001) or data destruction error (error code 0002) will be generated and the PCU will be started up using the initial values (i.e., the factory settings) or the parameters and data that had been saved prior to the last save to flash memory.

If parameters or data are lost, no operation other than data transfer or data saved can be received. After transferring the data, save the data and turn the power off and then on again, or restart the PCU.

4-1-2 Waiting for PCU Startup

The Position Control Unit performs initial processing when it is powered up or restarted. During this initial processing, the PCU cannot receive any instructions or commands from the Programmable Controller and will ignore them. The PCU's X-axis Busy Flag remains ON until the initial processing is completed, so after the PCU has been powered up or restarted, check to make sure that this Busy Flag has turned OFF before executing a START.

Caution Carefully check to be sure that the parameters and data have been properly set for correct operation.

Caution Before performing any operations that will change the Operating Memory Area, check to be sure that the equipment will operate safely.

4-1-3 Area Allocation

Parameter Areas (Data Memory)

Each unit number occupies 100 words, allocated from DM 1000 to DM 2599 (or DM 2499 for NC413 PCUs).

C200HW-NC113/NC213

Unit #0	DM 1000 to DM 1099
Unit #1	DM 1100 to DM 1199
Unit #2	DM 1200 to DM 1299
Unit #3	DM 1300 to DM 1399
Unit #4	DM 1400 to DM 1499
Unit #5	DM 1500 to DM 1599
Unit #6	DM 1600 to DM 1699
Unit #7	DM 1700 to DM 1799
Unit #8	DM 1800 to DM 1899
Unit #9	DM 1900 to DM 1999
Unit #A	DM 2000 to DM 2099
Unit #B	DM 2100 to DM 2199
Unit #C	DM 2200 to DM 2299
Unit #D	DM 2300 to DM 2399
Unit #E	DM 2400 to DM 2499
Unit #F	DM 2500 to DM 2599

C200HW-NC413

Unit #0	DM 1000 to DM 1099
Unit #1	DM 1100 to DM 1199
Unit #2	DM 1200 to DM 1299
Unit #3	DM 1300 to DM 1399
Unit #4	DM 1400 to DM 1499
Unit #5	DM 1500 to DM 1599
Unit #6	DM 1600 to DM 1699
Unit #7	DM 1700 to DM 1799
Unit #8	DM 1800 to DM 1899
Unit #A	DM 2000 to DM 2099
Unit #B	DM 2100 to DM 2199
Unit #C	DM 2200 to DM 2299
Unit #D	DM 2300 to DM 2399
Unit #E	DM 2400 to DM 2499

Word address	Contents	
m to m+3	Common parameters	
m+4 to m+27	Axis parameters	For X axis
m+28 to m+51		For Y axis
m+52 to m+75		For Z axis
m+76 to m+99		For U axis

m: 1000+100 x Unit No.

Operating Memory Area (IR Area)

C200HW-NC113/213 PCUs occupy 10 words in the IR Area for Special I/O Units, and C200HW-NC413 PCUs occupy 20 words in that area.

C200HW-NC113/NC213

Unit #0	IR 100 to IR 109
Unit #1	IR 110 to IR 119
Unit #2	IR 120 to IR 129
Unit #3	IR 130 to IR 139
Unit #4	IR 140 to IR 149
Unit #5	IR 150 to IR 159
Unit #6	IR 160 to IR 169
Unit #7	IR 170 to IR 179
Unit #8	IR 180 to IR 189
Unit #9	IR 190 to IR 199
Unit #A	IR 400 to IR 409
Unit #B	IR 410 to IR 419
Unit #C	IR 420 to IR 429
Unit #D	IR 430 to IR 439
Unit #E	IR 440 to IR 449
Unit #F	IR 450 to IR 459

C200HW-NC413

I/O	Word address	Axis
Output	n to n+1	X axis
Input	n+2 to n+4	X axis

C200HW-NC213

I/O	Word address	Axis
Output	n to n+1	X axis
	n+2 to n+3	Y axis
Input	n+4 to n+6	X axis
	n+7 to n+9	Y axis

n: 100+10 x Unit No. (Unit No. ≦9)
400+10 x (Unit No. - 10) (Unit No. ≧A(10))

C200HW-NC413

Unit #0	IR 100 to IR 119
Unit #1	IR 110 to IR 129
Unit #2	IR 120 to IR 139
Unit #3	IR 130 to IR 149
Unit #4	IR 140 to IR 159
Unit #5	IR 150 to IR 169
Unit #6	IR 160 to IR 179
Unit #7	IR 170 to IR 189
Unit #8	IR 180 to IR 199
Unit #A	IR 400 to IR 419
Unit #B	IR 410 to IR 429
Unit #C	IR 420 to IR 439
Unit #D	IR 430 to IR 449
Unit #E	IR 440 to IR 459

C200HW-NC413

I/O	Word address	Axis
Output	n to n+1	X axis
	n+2 to n+3	Y axis
	n+4 to n+5	Z axis
	n+6 to n+7	U axis
Input	n+8 to n+10	X axis
	n+11 to n+13	Y axis
	n+14 to n+16	Z axis
	n+17 to n+19	U axis

Note

1. The C200HW-NC413 occupies the space for two unit numbers, i.e., the unit number that is set and also the following number. For example, if the unit number is set to 0, then the area for unit numbers 0 and 1 is allocated.
2. Be sure to set the unit numbers so that they do not overlap with the unit numbers of other Special I/O Units.
3. Since the C200HW-NC413 occupies the space for two unit numbers, it cannot be set for unit numbers 9 or F.

Depending on the model of the Programmable Controller that is used, it may not be possible to set PCU unit numbers from A to F (E). Please check the operation manual of the Programmable Controller.

Operating Memory Area

For details regarding operating memory area settings, refer to *Parameter Areas* under *4-1-4 Data Areas* and *4-2 Common Parameter Area*.

Common Parameter Area

	15			00		
m	0	0	0	0	- - -	x: D (DM area), E (EM area)
m+1	$x10^3$	$x10^2$	$x10^1$	$x10^0$	- - -	Beginning word address

} I

C200HW-NC113

I/O	Word address	Axis
Output	I to I+5	Common
	I+6 to I+10	X axis
Input	I+11 to I+12	X axis

C200HW-NC213

I/O	Word address	Axis
Output	I to I+5	Common
	I+6 to I+10	X axis
	I+11 to I+15	Y axis
Input	I+16 to I+17	X axis
	I+18 to I+19	Y axis

C200HW-NC413

I/O	Word address	Axis
Output	I to I+5	Common
	I+6 to I+10	X axis
	I+11 to I+15	Y axis
	I+16 to I+20	Z axis
	I+21 to I+25	U axis
Input	I+26 to I+27	X axis
	I+28 to I+29	Y axis
	I+30 to I+31	Z axis
	I+32 to I+33	U axis

Note "I" represents the beginning word address of the area designated by the common parameter area.

Example

Common Parameter Area

	15			00
m	0	0	0	D
m+1	0	1	0	0

When the common parameter area settings are made as shown in this example, the operating data area will be allocated to DM 0100 onwards.

There is no EM area for C200H/HS/HE Programmable Controllers, so in that case the EM area cannot be designated for the operating data area.

Data Transfer Area

For details regarding data transfer area settings, refer to *Operating Data Area* under *4-1-4 Data Areas*.

4-1-4 Data Areas

Parameter Area

Common Parameters (Data Memory)

Designation of Operating Data Area

Word m

15			00
0	0	0	X

Designate the memory area to which the operating memory is to be set.

X = D (DM area)
E (EM area)

Beginning Word of Operating Data Area

Word m+1

15			00
$x10^3$	$x10^2$	$x10^1$	$x10^0$

Designate the beginning word of the operating data area.

Unit Mounting Position and Parameter Designation

Word m+2

15 … 08	07 … 00
Mounting position	Parameter designation

Mounting Position

00: To be mounted on the CPU Rack or Expansion I/O Rack

01: To be mounted to a Remote Slave Rack

Parameter Designation

00: Operate according to the axis parameters saved to the PCU.

01: Operate according to the axis parameters in DM words m+4 to m+99.

Reserved

Word m+3

Set to 0000.

Axis Parameters (Data Memory)

I/O Settings

X axis m+4 (NC113), Y axis m+28 (NC213), Z axis m+52 and U axis m+76 (NC413)

15						08		04			00
0	0	0	0	0	0	0	I/O settings	0	0	0	

Bit	Item	Settings
00	Output pulse selection	0: CW/CCW output; 1: Pulse/Direction output
01 to 03	Reserved	Set to 0.
04	Limit input signal type	0: N.C input, 1: N.O input
05	Origin proximity input signal type	0: N.C input, 1: N.O input
06	Origin input signal type	0: N.C input, 1: N.O input
07	Emergency stop input	0: Stop only pulse output 1: Pulse output stop and error counter reset output (enabled for operation modes 1 and 2)
08	Origin undefined designation	0: Retain prior status (for emergency stop or limit inputs) 1: Forcibly change to origin undefined status
09 to 15	Reserved	Set to 0.

Operation Mode Selection

X axis m+5 (NC113), Y axis m+29 (NC213), Z axis m+53 and U axis m+77 (NC413)

15 – 12	11 – 08	07 – 04	03 – 00
Origin search direction	Origin detection method	Origin search operation	Operation mode

Bit	Item	Settings
00 to 03	Operation mode	0 (Mode 0): Uses stepping motor, and uses external sensor signal as origin input signal. 1 (Mode 1): Uses servomotor driver, and uses encoder's Z-phase signal for origin input signal. Does not use positioning completed signal. 2 (Mode 2): Same as Mode 1, but uses positioning completed signal. 3 (Mode 3): Uses OMRON H-Series or M-Series Servomotor Driver. Origin search is completed by Servomotor Driver's origin adjustment command. Uses positioning completed signal.
04 to 07	Origin search operation	0: Reverse mode 1 (reverse at limit input) Detects origin in designated origin search direction. 1: Reverse mode 1 (error stop at limit input) Detects origin in designated origin search direction. 2: Single-direction mode (No reverse)
08 to 11	Origin detection method	0: Takes origin input signal after origin proximity input signal turns ON (↑) and OFF (↓). 1: Takes origin input signal after origin proximity input signal turns ON (↑). 2: Takes origin input signal without using origin proximity input signal. 3: Takes origin input signal after limit input signal turns ON (↑) and OFF (↓), or OFF (↓), without using origin proximity input signal. (Enabled only for single-direction mode.)
12 to 15	Origin search direction	0: CW direction 1: CCW direction

Maximum Speed

X axis m+6 (NC113), Y axis m+30 (NC213), Z axis m+54 and U axis m+78 (NC413)

15 – 14	13 – 12			00
Factor	$x10^3$	$x10^2$	$x10^1$	$x10^0$

Factor: 00: x1, 01: x10, 10: x100, 11: x1,000 (pps)

Initial Speed

X axis m+7 (NC113), Y axis m+31 (NC213), Z axis m+55 and U axis m+79 (NC413)

15 – 14	13 – 12			00
Factor	$x10^3$	$x10^2$	$x10^1$	$x10^0$

Factor: 00: x1, 01: x10, 10: x100, 11: x1,000 (pps)

Origin Search High Speed

X axis m+8 (NC113), Y axis m+32 (NC213), Z axis m+56 and U axis m+80 (NC413)

15 14	13 12			00
Factor	$x10^3$	$x10^2$	$x10^1$	$x10^0$

Factor: 00: x1, 01: x10, 10: x100, 11: x1,000 (pps)

Origin Search Proximity Speed

X axis m+9 (NC113), Y axis m+33 (NC213), Z axis m+57 and U axis m+81 (NC413)

15 14	13 12			00
Factor	$x10^3$	$x10^2$	$x10^1$	$x10^0$

Factor: 00: x1, 01: x10, 10: x100, 11: x1,000 (pps)

Origin Compensation (Rightmost Word)

X axis m+10 (NC113), Y axis m+34 (NC213), Z axis m+58 and U axis m+82 (NC413)

Origin Compensation (Leftmost Word)

X axis m+11 (NC113), Y axis m+35 (NC213), Z axis m+59 and U axis m+83 (NC413)

15 Leftmost word 00				15 Rightmost word 00			
Sign	$x10^6$	$x10^5$	$x10^4$	$x10^3$	$x10^2$	$x10^1$	$x10^0$

Sign: 0: Positive (CW), 1: Negative (CCW), Setting Range: –9,999,999 to +9,999,999 (pulses)

Backlash Compensation

X axis m+12 (NC113), Y axis m+36 (NC213), Z axis m+60 and U axis m+84 (NC413)

15			00
$x10^3$	$x10^2$	$x10^1$	$x10^0$

Setting Range: 0 to 9,999 (pulses)

Backlash Compensation Speed

X axis m+13 (NC113), Y axis m+37 (NC213), Z axis m+61 and U axis m+85 (NC413)

15 14	13 12			00
Factor	$x10^3$	$x10^2$	$x10^1$	$x10^0$

Factor: 00: x1, 01: x10, 10: x100, 11: x1,000 (pps)

Acceleration/Deceleration Curves

X axis m+14 (NC113), Y axis m+38 (NC213), Z axis m+62 and U axis m+86 (NC413)

15			00
0	0	0	Designation

Designation: 0: Trapezoidal Curve, 1: S Curve

Acceleration Time (Rightmost Word)
X axis m+15 (NC113), Y axis m+39 (NC213), Z axis m+63 and U axis m+87 (NC413)
Acceleration Time (Leftmost Word)
X axis m+16 (NC113), Y axis m+40 (NC213), Z axis m+64 and U axis m+88 (NC413)

15 Leftmost word 00				15 Rightmost word 00			
0	0	$x10^5$	$x10^4$	$x10^3$	$x10^2$	$x10^1$	$x10^0$

Setting Range: 0 to 250,000 (ms)

Deceleration Time (Rightmost Word)
X axis m+17 (NC113), Y axis m+41 (NC213), Z axis m+65 and U axis m+89 (NC413)
Deceleration Time (Leftmost Word)
X axis m+18 (NC113), Y axis m+42 (NC213), Z axis m+66 and U axis m+90 (NC413)

15 Leftmost word 00				15 Rightmost word 00			
0	0	$x10^5$	$x10^4$	$x10^3$	$x10^2$	$x10^1$	$x10^0$

Setting Range: 0 to 250,000 (ms)

Positioning Monitor Time
X axis m+19 (NC113), Y axis m+43 (NC213), Z axis m+67 and U axis m+91 (NC413)

15			00
$x10^3$	$x10^2$	$x10^1$	$x10^0$

Setting Range: 0 to 9,999 (ms) (Valid when the operation mode is set to 2 or 3.)

CCW Limit (Rightmost Word)
X axis m+20 (NC113), Y axis m+44 (NC213), Z axis m+68 and U axis m+92 (NC413)
CCW Limit (Leftmost Word)
X axis m+21 (NC113), Y axis m+45 (NC213), Z axis m+69 and U axis m+93 (NC413)
CW Limit (Rightmost Word)
X axis m+22 (NC113), Y axis m+46 (NC213), Z axis m+70 and U axis m+94 (NC413)
CW Limit (Leftmost Word)
X axis m+23 (NC113), Y axis m+47 (NC213), Z axis m+71 and U axis m+95 (NC413)

CCW Software Limit and CW Software Limit

15 Leftmost word 00				15 Rightmost word 00			
Sign	$x10^6$	$x10^5$	$x10^4$	$x10^3$	$x10^2$	$x10^1$	$x10^0$

Sign: 0: Positive (CW), 1: Negative (CCW), Setting Range: –9,999,999 to +9,999,999 (pulses)

Reserved
X axis m+24 to m+27 (NC113), Y axis m+48 to m+51 (NC213), Z axis m+72 to m+75 and U axis m+96 to m+99 (NC413)
Set to 0000.

Note I/O settings go into effect with the next powerup or restart after the settings have been made. Other axis parameters go into effect with the next command when they are transferred.

Operating Memory Area

I/O	Model	Words				Bits	Operation	
		X axis	Y axis	Z axis	U axis			
Output	NC413	n	n+2	n+4	n+6	00	Memory operation	Sequence number enable 1: Enabled 0: Disabled
	NC213	n	n+2					
	NC113	n						
						01		START (↑)
						02		INDEPENDENT START (↑)
						03	Direct operation	ABSOLUTE MOVEMENT (↑)
						04		RELATIVE MOVEMENT (↑)
						05		INTERRUPT FEEDING (↑)
						06	ORIGIN SEARCH (↑)	
						07	ORIGIN RETURN (↑)	
						08	PRESENT POSITION CHANGE (↑)	
						09	JOG (speed feeding) (1: Operate; 0: Stop)	
						10	Direction designation (direction for jogging and interrupt feeding during direct operation) (1: CCW; 0: CW)	
						11	TEACH (↑)	
						12	RELEASE PROHIBIT (↑)	
						13	Error counter reset output and origin adjustment command output (1: ON; 0: OFF)	
						14	Override enable (1: Enabled; 0: Disabled)	
						15	STOP (↑)	
	NC413	n+1	n+3	n+5	n+7	00 to 07	Sequence numbers: 00 to 99 (BCD)	
	NC213	n+1	n+3					
	NC113	n+1				08	FORCED INTERRUPT (↑)	
						09 to 11	Reserved	
						12	WRITE DATA (↑) (enabled only for X-axis bit)	
						13	READ DATA (↑) (enabled only for X-axis bit)	
						14	SAVE DATA (↑) (enabled only for X-axis bit)	
						15	Reserved	
Input	NC413	n+8	n+11	n+14	n+17	00 to 03	Output code: 0 to F (hexadecimal)	
	NC213	n+4	n+7					
	NC113	n+2				04	Waiting for memory operation (1: Waiting; 0: Not waiting)	
						05	Positioning completed (↑: Completed; ↓: Starting)	
						06	No Origin Flag (1: No origin; 0: Origin established)	
						07	Origin Stop Flag (1: Stopped at origin; 0: Anything else)	
						08	Zone 0 (1: Within zone; 0: Outside zone)	
						09	Zone 1 (1: Within zone; 0: Outside zone)	
						10	Zone 2 (1: Within zone; 0: Outside zone)	
						11	Teaching completed (↑: Completed; ↓: Starting)	
						12	Error Flag (1: Error; 0: No error)	
						13	Busy Flag (X-axis bit is also used as Unit initial processing flag.)	
						14	Data transferring (enabled only for X-axis bit) (↑: Transferring or saving; ↓: Completed)	
						15	Deceleration stop execution (↑: Completed; ↓: Beginning	

I/O	Model	Words				Bits	Operation
		X axis	Y axis	Z axis	U axis		
Input	NC413	n+9	n+12	n+15	n+18	00 to 15	Present position (rightmost digits)
		n+10	n+13	n+16	n+19	00 to 15	Present position (leftmost digits)
	NC213	n+5	n+8				
		n+6	n+9				
	NC113	n+3					
		n+4					

15			00
$x10^3$	$x10^2$	$x10^1$	$x10^0$

15			00
Sign	$x10^6$	$x10^5$	$x10^4$

Sign: 0: Plus (CW); 1: Minus (CCW)

Operating Data Area

Common

I/O	Words	Bits	Name	Operation
Output	I	00 to 15	Number of transfer words	Information for Writing Data
	I+1	00 to 15	Transfer source word	Specify the following in four digits BCD when writing data. • Number of words to be transferred. • Transfer source word (DM or EM word at the PC) (DM 1000 to DM 1999 cannot be set.) • Transfer destination address (the PCU address)
	I+2	00 to 15	Transfer destination address	
	I+3	00 to 15	Number of transfer words	Information for Reading Data Specify the following in four digits BCD when reading data. • Number of words to be transferred. • Transfer source address (the PCU address) • Transfer destination word (DM or EM word at the PC) (DM 1000 to DM 1999 cannot be set.)
	I+4	00 to 15	Transfer source address	
	I+5	00 to 15	Transfer destination word	

15			00
$x10^3$	$x10^2$	$x10^1$	$x10^0$

For Individual Axes

I/O	Model	Words				Bit	Name	Operation
		X axis	Y axis	Z axis	U axis			
Output	NC413	I+6	I+11	I+16	I+21	00 to 15	Position designation (rightmost)	Set the position in this area when executing ABSOLUTE MOVEMENT, RELATIVE MOVEMENT, INTERRUPT FEEDING, or RESET PRESENT POSITION.
		I+7	I+12	I+17	I+22		Position designation (leftmost)	
	NC213	I+6	I+11					
		I+7	I+12					
	NC113	I+6						
		I+7						

15			00
$x10^3$	$x10^2$	$x10^1$	$x10^0$

15			00
Sign	$x10^6$	$x10^5$	$x10^4$

Sign: 0: Plus; 1: Minus
Range: –9,999,999 to +9,999,999 (pulses)

I/O	Model	Words				Bit	Name	Operation
		X axis	Y axis	Z axis	U axis			
Output	NC413 NC213 NC113	I+8 I+8 I+8	I+13 I+13	I+18	I+23	00 to 15	Speed designation	Set the position in this area when executing ABSOLUTE MOVEMENT, RELATIVE MOVEMENT, INTERRUPT FEEDING, JOG, or ORIGIN RETURN. When the speed in this area is changed during execution operation, it will be changed to the following speed. Feed speed = speed des. x override / 100 (Override value is referenced only when it is set to Override Enable.) 15 14 13 12 00 Factor | $x10^3$ | $x10^2$ | $x10^1$ | $x10^0$ Factor: 00: x1; 01: x 10; 10: x100; 11: x1,000 (Unit: pps)
	NC413 NC213 NC113	I+9 I+9 I+9	I+14 I+14	I+19	I+24	00 to 15	Override	Specify the override in four digits BCD, from 0001 to 0999 (1% to 999%). This override value is referenced when the Override Enable Bit is ON.
	NC413 NC213 NC113	I+10 I+10 I+10	I+15 I+15	I+20	I+25	00 to 07	Teaching address	Specify the position number for teaching, from 00 to 99 (BCD).
						08 to 11	Acceleration time No.	Specify the acceleration time number, from 0 to 9 (BCD) when executing ABSOLUTE MOVEMENT, RELATIVE MOVEMENT, INTERRUPT FEEDING, JOG, or ORIGIN RETURN. **Note:** If this is set to “0,” the acceleration time set in the axis parameters will be used.
						12 to 15	Deceleration time No.	Specify the deceleration time number, from 0 to 9 (BCD) when executing ABSOLUTE MOVEMENT, RELATIVE MOVEMENT, INTERRUPT FEEDING, JOG, or ORIGIN RETURN. **Note:** If this is set to “0,” the deceleration time set in the axis parameters will be used.
Input	NC413 NC213 NC113	I+26 I+16 I+11	I+28 I+18	I+30	I+32	00 to 07	Sequence number	Returns the sequence number during memory operation in two digits BCD.
						08	CW limit	Returns the I/O signal status for each axis. 1: ON 0: OFF
						09	CCW limit	
						10	Origin proximity	
						11	Origin input signal	
						12	Interrupt input	
						13	Emergency stop	
						14	Positioning completed input	
						15	Error counter reset output / Origin adjustment command output	

I/O	Model	Words				Bit	Name	Operation
		X axis	Y axis	Z axis	U axis			
Input	NC413 NC213 NC113	I+27 I+17 I+12	I+29 I+19	I+31	I+33	00 to 15	Error code	Returns the error code in four digits BCD. This value is normally 0000 (when there is no error).

Data Transfer Area

Position Control Unit storage locations are indicated by address.

For details regarding data transfer, refer to *Section 5 Transferring and Saving Data*. For details regarding positioning sequences, refer to *4-6 Positioning Sequence Details*.

I/O Settings

X axis 0004 (NC113), Y axis 0028 (NC213), Z axis 0052 and U axis 0076 (NC413)

15							08		04			00
0	0	0	0	0	0	0	I/O settings		0	0	0	

Bit	Item	Settings
00	Output pulse selection	0: CW/CCW output 1: Pulse/Direction output
01 to 03	Reserved	Set to 0.
04	Limit input signal type	0: N.C. input 1: N.O. input
05	origin proximity input signal type	0: N.C. input; 1: N.O. input
06	Origin input signal type	0: N.C. input; 1: N.O. input
07	Emergency stop input	0: Only stop pulse output. 1: Stop pulse output and output the error counter reset signal (enabled for operation modes 1 and 2).
08	Origin undefined designation	0: Retain prior status (for emergency stop or limit inputs) 1: Forcibly change to origin undefined status
09 to 15	Reserved	Set to 0.

Default Setting: 0060

Operation Mode Selection

X axis 0005 (NC113), Y axis 0029 (NC213), Z axis 0053 and U axis 0077 (NC413)

15 – 12	11 – 08	07 – 04	03 – 00
Origin search direction	Origin detection method	Origin search operation	Operation mode

Bit	Item	Settings
00 to 03	Operation mode	0 (Mode 0): Uses stepping motor, and uses external sensor signal as origin input signal. 1 (Mode 1): Uses servomotor driver, and uses encoder's Z-phase signal for origin input signal. Does not use positioning completed signal. 2 (Mode 2): Same as Mode 1, but uses positioning completed signal. 3 (Mode 3): Uses OMRON H-Series or M-Series Servomotor Driver. Origin search is completed by Servomotor Driver's origin adjustment command. Uses positioning completed signal.
04 to 07	Origin search operation	0: Reverse mode 1 (reverse at limit input) Detects origin in designated origin search direction. 1: Reverse mode 2 (error stop at limit input) Detects origin in designated origin search direction. 2: Single-direction mode (No reverse)
08 to 11	Origin detection method	0: Takes origin input signal after origin proximity input signal turns ON (↑) and OFF (↓). 1: Takes origin input signal after origin proximity input signal turns ON (↑). 2: Takes origin input signal without using origin proximity input signal. 3: Takes origin input signal after limit input signal turns ON (↑) and OFF (↓), or OFF (↓), without using origin proximity input signal. (enabled only for single-direction mode.)
12 to 15	Origin search direction	0: CW direction 1: CCW direction

Default Setting: 0000

Note Once the I/O settings have been specified, they are enabled by turning on the power or restarting the Unit. If the settings have been specified by data transfer, save the data and then turn on the power or restart the Unit.
The other parameters for each axis are enabled at the point of transfer and from the following command operations.

Maximum Speed

X axis 0006 (NC113), Y axis 0030 (NC213), Z axis 0054 and U axis 0078 (NC413)

15 – 14	13 – 12			00
Factor	$x10^3$	$x10^2$	$x10^1$	$x10^0$

Factor: 00: x1, 01: x10, 10: x100, 11: x1,000 (pps)

Default Setting: C500

Initial Speed

X axis 0007 (NC113), Y axis 0031 (NC213), Z axis 0055 and U axis 0079 (NC413)

15	14	13	12			00
Factor		$x10^3$	$x10^2$	$x10^1$	$x10^0$	

Factor: 00: x1, 01: x10, 10: x100, 11: x1,000 (pps)

Default Setting: 0000

Origin Search High Speed

X axis 0008 (NC113), Y axis 0032 (NC213), Z axis 0056 and U axis 0080 (NC413)

15	14	13	12			00
Factor		$x10^3$	$x10^2$	$x10^1$	$x10^0$	

Factor: 00: x1, 01: x10, 10: x100, 11: x1,000 (pps)

Default Setting: 8250

Note When setting the origin search high speed or the origin search proximity speed with the IOWR instruction, be sure to set both of these items together. If only one of these items is set, an error (error code 8701) will be generated and the setting will not be made.

Origin Search Proximity Speed

X axis 0009 (NC113), Y axis 0033 (NC213), Z axis 0057 and U axis 0081 (NC413)

15	14	13	12			00
Factor		$x10^3$	$x10^2$	$x10^1$	$x10^0$	

Factor: 00: x1, 01: x10, 10: x100, 11: x1,000 (pps)

Default Setting: 4250

Note When setting the origin search high speed or the origin search proximity speed with the IOWR instruction, be sure to set both of these items together. If only one of these items is set, an error (error code 8701) will be generated and the setting will not be made.

Origin Compensation Value (Rightmost Word)

X axis 0010 (NC113), Y axis 0034 (NC213), Z axis 0058 and U axis 0082 (NC413)

Origin Compensation Value (Leftmost Word)

X axis 0011 (NC113), Y axis 0035 (NC213), Z axis 0059 and U axis 0083 (NC413)

15	Leftmost word		00	15	Rightmost word		00
Sign	$x10^6$	$x10^5$	$x10^4$	$x10^3$	$x10^2$	$x10^1$	$x10^0$

Sign: 0: Positive (CW); 1: Negative (CCW)
Range: –9,999,999 to +9,999,999 (pulses)

Default Setting: 0000, 0000

Backlash Compensation Value

X axis 0012 (NC113), Y axis 0036 (NC213), Z axis 0060 and U axis 0084 (NC413)

15			00
$x10^3$	$x10^2$	$x10^1$	$x10^0$

Range: 0 to 9,999 (pulses)

Default Setting: 0000

Backlash Compensation Speed

X axis 0013 (NC113), Y axis 0037 (NC213), Z axis 0061 and U axis 0085 (NC413)

15 14	13 12			00
Factor	$x10^3$	$x10^2$	$x10^1$	$x10^0$

Factor: 00: x1, 01: x10, 10: x100, 11: x1,000 (pps)

Default Setting: 0000

Acceleration/Deceleration Curve

X axis 0014 (NC113), Y axis 0038 (NC213), Z axis 0062 and U axis 0086 (NC413)

15			00
0	0	0	Designation

Designation: 0: Trapezoid; 1: S-curve

Default setting: 0000

Acceleration Time (Rightmost Word)

X axis 0015 (NC113), Y axis 0039 (NC213), Z axis 0063 and U axis 0087 (NC413)

Acceleration Time (Leftmost Word)

X axis 0016 (NC113), Y axis 0040 (NC213), Z axis 0064 and U axis 0088 (NC413)

15 Leftmost word 00				15 Rightmost word 00			
0	0	$x10^5$	$x10^4$	$x10^3$	$x10^2$	$x10^1$	$x10^0$

Range: 0 to 250,000 (ms)

Default Setting: 0100, 0000

Deceleration Time (Rightmost Word)

X axis 0017 (NC113), Y axis 0041 (NC213), Z axis 0065 and U axis 0089 (NC413)

Deceleration Time (Leftmost Word)

X axis 0018 (NC113), Y axis 0042 (NC213), Z axis 0066 and U axis 0090 (NC413)

15 Leftmost word 00				15 Rightmost word 00			
0	0	$x10^5$	$x10^4$	$x10^3$	$x10^2$	$x10^1$	$x10^0$

Range: 0 to 250,000 (ms)

Default Setting: 0100, 0000

Positioning Monitor Time

X axis 0019 (NC113), Y axis 0043 (NC213), Z axis 0067 and U axis 0091 (NC413)

15			00
$x10^3$	$x10^2$	$x10^1$	$x10^0$

Range: 0 to 9,999 (ms)
Enabled for operation modes 2 and 3.

Default Setting: 9999

CCW Limit (Rightmost Word)
X axis 0020 (NC113), Y axis 0044 (NC213), Z axis 0068 and U axis 0092 (NC413)
CCW Limit (Leftmost Word)
X axis 0021 (NC113), Y axis 0045 (NC213), Z axis 0069 and U axis 0093 (NC413)
CW Limit (Rightmost Word)
X axis 0022 (NC113), Y axis 0046 (NC213), Z axis 0070 and U axis 0094 (NC413)
CW Limit (Leftmost Word)
X axis 0023 (NC113), Y axis 0047 (NC213), Z axis 0071 and U axis 0095 (NC413)

CCW software limit, CW software limit

15 Leftmost word 00				15 Rightmost word 00			
Sign	$x10^6$	$x10^5$	$x10^4$	$x10^3$	$x10^2$	$x10^1$	$x10^0$

Sign: 0: Positive (CW); 1: Negative (CCW)
Range: –9,999,999 to +9,999,999 (pulses)

Default Setting: 1999, 9999; 0999, 9999

Reserved
X axis 0024 to 0027 (NC113), Y axis 0048 to 0051 (NC213), Z axis 0072 to 0075 and U axis 0096 to 0099 (NC413)
Set to 0000.

Default Setting: 0000

Sequence #0
X axis 1000, 1001, 1002 (NC113), Y axis 2000, 2001, 2002 (NC213), Z axis 3000, 3001, 3002 and U axis 4000, 4001, 4002 (NC413)
Example: X axis

	15 12	11 08	07 04	03 00
1000	Axis designation	Output code	0	Completion code
1001	Dwell time No.		Acceleration time No.	Deceleration time No.
1002	Initial speed No.		Target speed No.	

Axis Designation: Set the bits for active axes to “1.”
Bit 15: U axis; 14: Z axis; 13: Y axis; 12: X axis

Output Code: 0 to F
Completion Code: 0 to 6 (BCD)
Dwell Time No. 00 to 19 (BCD)
Acceleration Time No. 0 to 9 (BCD)
Deceleration Time No. 0 to 9 (BCD)
Initial/Target Speed No.: 0 to 99 (BCD)

Default Setting: 0000, 0000, 0000

Sequence #1
X axis 1003 (NC113), Y axis 2003 (NC213), Z axis 3003 and U axis 4003 (NC413)
The settings are the same as for sequence #0.

Default setting: 0000, 0000, 0000

Note The word addresses continue in order for all four axes from sequence #2 through sequence #97, which are not listed in detail here.

Sequence #98
X axis 1294 (NC113), Y axis 2294 (NC213), Z axis 3294 and U axis 4294 (NC413)
Same as for sequence #0.

Default setting: 0000, 0000, 0000

Sequence #99
X axis 1297 (NC113), Y axis 2297 (NC213), Z axis 3297 and U axis 4297 (NC413)
Same as for sequence #0.

Default setting: 0000, 0000, 0000

Note When setting the sequence data using the SYSMAC-NCT Support Tool, more than one axis designation cannot be made for one sequence data number. If more than one axis designation is made for one sequence data number, an Axis Designation Error will occur.
For example, an Axis Designation Error will occur in the following cases;
Axis designation of “XY” for the X-axis sequence data No. 100
Axis designation of “Y” for the Y-axis sequence data No. 100.

Speed #0
X axis 1300 (NC113), Y axis 2300 (NC213), Z axis 3300 and U axis 4300 (NC413)

15 14	13 12			00
Factor	$x10^3$	$x10^2$	$x10^1$	$x10^0$

This data sets speed #0. The permissible setting range is 0 to 1,000,000 (pps) in the following combination. The two leftmost bits are used for setting the factor.

Factor: 00: x1; 01: x10; 10: x100; 11: x1,000
Speed: 0 to 3,999

Default Setting: 0000

Speed #1
X axis 1301 (NC113), Y axis 2301 (NC213), Z axis 3301 and U axis 4301 (NC413)
The settings are the same as for speed #0.

Default Setting: 0000

Note The word addresses continue in order for all four axes from speed #2 through speed #97, which are not listed in detail here.

Speed #98
X axis 1398 (NC113), Y axis 2398 (NC213), Z axis 3398 and U axis 4398 (NC413)
The settings are the same as for speed #0.

Default Setting: 0000

Speed #99
X axis 1399 (NC113), Y axis 2399 (NC213), Z axis 3399 and U axis 4399 (NC413)
The settings are the same as for speed #0.

Default Setting: 0000

Position #0 (Rightmost Word)
X axis 1400 (NC113), Y axis 2400 (NC213), Z axis 3400 and U axis 4400 (NC413)
Position #0 (Leftmost Word)
X axis 1401 (NC113), Y axis 2401 (NC213), Z axis 3401 and U axis 4401 (NC413)

15 Leftmost word 00				15 Rightmost word 00			
Sign	$x10^6$	$x10^5$	$x10^4$	$x10^3$	$x10^2$	$x10^1$	$x10^0$

This sets the data for position #0. The position can be specified as either absolute or incremental, according to the sign setting:

0: Positive (absolute)
1: Negative (absolute)
2: Positive (incremental)
3: Negative (incremental)

Set the position within a range of –9,999,999 to +9,999,999 (pulses).

Default setting: 0000, 0000

Position #1
X axis 1402 (NC113), Y axis 2402 (NC213), Z axis 3402 and U axis 4402 (NC413)
The settings are the same as for position #0.

Default Setting: 0000, 0000

Note The word addresses continue in order for all four axes from position #2 through position #97, which are not listed in detail here.

Position #98
X axis 1596 (NC113), Y axis 2596 (NC213), Z axis 3596 and U axis 4596 (NC413)
The settings are the same as for position #0.

Default Setting: 0000, 0000

Position #99
X axis 1598 (NC113), Y axis 2598 (NC213), Z axis 3598 and U axis 4598 (NC413)
The settings are the same as for position #0.

Default Setting: 0000, 0000

Reserved
X axis 1600, 1601 (NC113), Y axis 2600, 2601 (NC213), Z axis 3600, 3601 and U axis 4600, 4601 (NC413)
Set to 0000.

Default Setting: 0000

Acceleration Time #1 (Rightmost Word)
X axis 1602 (NC113), Y axis 2602 (NC213), Z axis 3602 and U axis 4602 (NC413)
Acceleration Time #1 (Leftmost Word)
X axis 1603 (NC113), Y axis 2603 (NC213), Z axis 3603 and U axis 4603 (NC413)

15 Leftmost word 00				15 Rightmost word 00			
0	0	$x10^5$	$x10^4$	$x10^3$	$x10^2$	$x10^1$	$x10^0$

This sets the data for acceleration time #1.

Default Setting: 0000, 0000

Note The word addresses continue in order for all four axes from Acceleration Time #2 through Acceleration Time #8 which are not listed in detail here.

Acceleration Time #9
X axis 1618 (NC113), Y axis 2618 (NC213), Z axis 3618 and U axis 4618 (NC413)
The settings are the same as for acceleration time #1.

Default Setting: 0000, 0000

Reserved
X axis 1620, 1621 (NC113), Y axis 2620, 2621 (NC213), Z axis 3620, 3621 and U axis 4620, 4621 (NC413)
Set to 0000.

Default Setting: 0000

Deceleration Time #1 (Rightmost Word)
X axis 1622 (NC113), Y axis 2622 (NC213), Z axis 3622 and U axis 4622 (NC413)
Deceleration Time #1 (Rightmost Word)
X axis 1623 (NC113), Y axis 2623 (NC213), Z axis 3623 and U axis 4623 (NC413)

15 Leftmost word 00				15 Rightmost word 00			
0	0	$x10^5$	$x10^4$	$x10^3$	$x10^2$	$x10^1$	$x10^0$

This sets the data for deceleration time #1.

Default Setting: 0000, 0000

Note The word addresses continue in order for all four axes from Deceleration Time #2 through Deceleration Time #8 which are not listed in detail here.

Deceleration Time #9
X axis 1638 (NC113), Y axis 2638 (NC213), Z axis 3638 and U axis 4638 (NC413)
The settings are the same as for deceleration time #1.

Default Setting: 0000, 0000

Reserved
X axis 1640 (NC113), Y axis 2640 (NC213), Z axis 3640 and U axis 4640 (NC413)
Set to 0000.

Default Setting: 0000

Dwell Time #1
X axis 1641 (NC113), Y axis 2641 (NC213), Z axis 3641 and U axis 4641 (NC413)

15			00
0	$x10^0$	$x10^{-1}$	$x10^{-2}$

This sets the data for dwell time #1.
Setting Range: 0 to 9.99 (seconds, set in units of 0.01 s)

Default Setting: 0000

Note The word addresses continue in order for all four axes from Dwell Time #2 through Dwell Time #18 which are not listed in detail here.

Dwell Time #19
X axis 1659 (NC113), Y axis 2659 (NC213), Z axis 3659 and U axis 4659 (NC413)
The settings are the same as for dwell time #1.

Default Setting: 0000

Zone #0, CCW Side (Rightmost Word)
X axis 1660 (NC113), Y axis 2660 (NC213), Z axis 3660 and U axis 4660 (NC413)
Zone #0, CCW Side (Leftmost Word)
X axis 1661 (NC113), Y axis 2661 (NC213), Z axis 3661 and U axis 4661 (NC413)
Zone #0, CW Side (Rightmost Word)
X axis 1662 (NC113), Y axis 2662 (NC213), Z axis 3662 and U axis 4662 (NC413)
Zone #0, CW Side (Leftmost Word)
X axis 1663 (NC113), Y axis 2663 (NC213), Z axis 3663 and U axis 4663 (NC413)

Designation for both CCW and CW sides

15 Leftmost word 00				15 Rightmost word 00			
Sign	$x10^6$	$x10^5$	$x10^4$	$x10^3$	$x10^2$	$x10^1$	$x10^0$

This sets the data for zone #0.

Sign: 0: Positive (CW); 1: Negative (CCW)
Range: -9,999,999 to +9,999,999 (pulses)

Make the settings so that the CCW value is less than the CW value.

Default Setting: 0000, 0000

Zone #1, CCW Side
X axis 1664 (NC113), Y axis 2664 (NC213), Z axis 3664 and U axis 4664 (NC413)
Zone #1, CW Side
X axis 1666 (NC113), Y axis 2666 (NC213), Z axis 3666 and U axis 4666 (NC413)
The settings are the same as for zone #1.

Default Setting: 0000, 0000

Zone #2, CCW Side
X axis 1668 (NC113), Y axis 2668 (NC213), Z axis 3668 and U axis 4668 (NC413)
Zone #2, CW Side
X axis 1670 (NC113), Y axis 2670 (NC213), Z axis 3670 and U axis 4670 (NC413)
The settings are the same as for zone #1.

Default Setting: 0000, 0000

4-2 Common Parameters

The common parameters are allocated to the Programmable Controller's DM area. The locations in the DM area are determined when the Position Control Unit's unit number is set.

The settings for the common parameters are explained below.

Note
1. The settings for the common parameters must be made when the PCU is used. If these settings are not made, a common parameters error will be generated (error codes 0010 to 0013) and the PCU will not operate normally.
2. After the common parameter settings have been made, they will go into effect the next time the PCU is powered up or restarted.

Designation of Operating Data Area

Word: m

15			00
0	0	0	X

This setting specifies whether the operating data area is to be set in the DM area or the EM area.

X = D (DM area)
E (EM area)

If anything other than the above is set, or if the beginning word designation (in m+1) is out of the permissible range, an operating data area word error will be generated. If such an error is generated, the following conditions will result. In that case, correct the setting and either power up again or restart the PCU.

- The RUN indicator on the PCU's front panel will light, and the ERR indicator will flash.
- The X-axis Error Flag will turn ON.

Operations (such as monitoring and data transfers) from the SYSMAC-NCT Support Tool, however, can be executed as usual.

Beginning Word of Operating Data Area

Word: m+1

15			00
$x10^3$	$x10^2$	$x10^1$	$x10^0$

This setting specifies the beginning word for the operating data area. The words that can be specified are the read/write-enabled DM and EM (bank 0 only) words shown in the following table.

PC model	Areas that can be set
C200H	DM 0000 to DM 0899
C200HS C200HE(-ZE)	DM 0000 to DM 0999 DM 2000 to DM 5999 (See note.)
C200HX/HG(-ZE)	**[For Unit No. 10]** DM 0000 to DM 0999 DM 2000 to DM 5999 (See note.) EM 0000 to EM 6143 (bank 0 only) **[For Unit No. 16]** DM 0000 to DM 0999 (See note.) DM 2600 to DM 5999 EM 0000 to EM 6143 (bank 0 only)

Note The upper limit varies depending on the memory capacity.

PCU Mounting Position and Parameter Designation

Word: m+2

15	08 07	00
Mounting position	Parameter designation	

The "mounting position" setting specifies whether the PCU is mounted to a Remote I/O Slave or to the CPU Rack or Expansion I/O Rack.

00: PCU mounted to CPU Rack or Expansion I/O Rack
01: PCU mounted to Remote I/O Slave

Note If this setting is "00" but the PCU is actually mounted to a Slave, a Special I/O Unit error will be generated. If that occurs, correct the setting to "01" and then power the PCU up again or restart it. Likewise, if the PCU is mounted to the CPU Rack or an Expansion I/O Rack, be sure to set this "mounting position" setting to "00." If it is set to "01" in that case, the responses to instructions from the Programmable Controller will be one or two scans slower than if it is set to "00."

The “parameter designation” setting specifies whether the axis parameters in DM m+4 to DM m+99 or the axis parameters saved to the PCU’s flash memory are to be used for operation.

00: Use parameters saved to PCU’s flash memory.
01: Use parameters in DM m+4 to DM m+99. (In this case, these parameters must be set in advance.)

Reserved

Word: m+3

Set to 0000.

4-3 Axis Parameters

The parameters for the X, Y, Z, and U axes are set in the axis parameters area.

4-3-1 Setting the Axis Parameters

The data required for controlling the Position Control Unit (PCU) is set in the axis parameters area. This essential data includes the settings for the operation mode, the maximum speed, the acceleration/deceleration curve, the origin search speeds, the software limits, and so on.

If the “parameter designation” setting in the common parameter area specifies that the axis parameters in DM m+4 to DM m+99 are to be used, then those parameters will be transferred to the PCU. If that parameter designation specifies that the axis parameters saved in the PCU’s flash memory are to be used, then those are the values that will be used.

When the axis parameters in DM m+4 to DM m+99 are used, they are read to the PCU and stored in the data area in addresses 0004 to 0099. (Words m+4 to m+99 in the Programmable Controller’s DM area correspond to addresses 0004 to 9999 in the PCU). When this data is saved, the settings are stored in the PCU’s flash memory.

4-3-2 Axis Parameters Details

I/O Settings
X axis m+4 (NC113), Y axis m+28 (NC213), Z axis m+52 and U axis m+76 (NC413)

15							08	04			00
0	0	0	0	0	0	0	I/O settings	0	0	0	

These settings specify the output pulse selection, the limit input signal contacts, and so on.

Bits	Settings
00	Output pulse selection: Specifies the pulse method for outputs. 0: CW/CCW output; 1: pulse/direction output
01 to 03	Reserved
04	Limit input signal type: Specifies the limit input signal contact. 0: N.C. input; 1: N.O. input
05	Origin proximity input signal type: Specifies the origin proximity input signal contact. 0: N.C. input; 1: N.O. input
06	Origin input signal type: Specifies the origin input signal contact. 0: N.C. input; 1: N.O. input
07	Emergency stop input: Specifies the operation for when the emergency stop signal is input. 0: Only stop pulse output. 1: Stop pulse output and output the error counter reset signal (enabled for operation modes 1 and 2).
08	Origin undefined designation: This setting specifies whether or not the origin will be undefined when an emergency stop signal, CWW limit signal, or CW limit signal is input. 0: Stop pulse output and retain prior status. 1: Stop pulse output and forcibly change to origin undefined status.
09 to 15	Reserved

Operation Mode Selection
X axis m+5 (NC113), Y axis m+29 (NC213), Z axis m+53 and U axis m+77 (NC413)

15	12	11	08	07	04	03	00
Origin search direction		Origin detection method		Origin search operation		Operation mode	

The data set in this word specifies the operation mode, the origin detection method, and so on. (For details regarding the operation mode, refer to *4-3-3 Operation Modes*.

Bit 00 to 03: Operation Mode Selection

Set the operation mode according to the motor driver and signal lines that are used.

Setting	Explanation
0 (Mode 0)	Uses stepping motor, and uses external sensor signal as origin input signal. In this mode, the error counter reset output and origin adjustment command output can be used as general-purpose outputs.
1 (Mode 1)	Uses servomotor driver, and uses encoder's Z-phase signal for origin input signal. Does not use positioning completed signal.
2 (Mode 2)	Same as Mode 1, but uses servomotor driver's positioning completed signal.
3 (Mode 3)	Uses OMRON H-Series or M-Series Servomotor Driver. Origin search is completed by Servomotor Driver's origin adjustment command. Uses positioning completed signal.

Default setting: 0000

Bit 04 to 07: Origin Search Operation

This setting specifies the origin search operation.

Setting	Explanation
0	Reverse mode 1 Always detects origin in designated origin search direction. Reverses at limit input.
1	Reverse mode 2 Always detects origin in designated origin search direction. Error stop at limit input.
2	Single-direction mode Detects origin while operating in designated origin search direction. (Does not reverse.) Error stop at limit input for designated origin search direction.

Bit 08 to 11: Origin Detection Method

This setting specifies the origin detection method.

Setting	Explanation
0	Takes origin input signal after origin proximity input signal turns ON (↑) and OFF (↓).
1	Takes origin input signal after origin proximity input signal turns ON (↑).
2	Takes origin input signal without using origin proximity input signal.
3	Takes origin input signal after limit input signal turns ON (↑) and OFF (↓), or OFF (↓), without using origin proximity input signal. (Enabled only for single-direction mode.)

Bit 12 to 15: Origin Search Direction

This setting specifies the direction for detecting the origin input signal during an origin search.

Setting	Explanation
0	CW direction
1	CCW direction

Maximum Speed

X axis m+6 (NC113), Y axis m+30 (NC213), Z axis m+54 and U axis m+78 (NC413)

15 14	13 12			00
Factor	$x10^3$	$x10^2$	$x10^1$	$x10^0$

This setting specifies the maximum speed that can be output by the PCU. If a speed designation that exceeds this setting is given during memory operation or direct operation, the axis will be operated at the maximum speed that is set here.

The permissible setting range is 0 to 500,000 in the following combination. The two leftmost bits are used for setting the factor.

- Factor: 00: x1; 01: x10; 10: x100; 11: x1,000 (pps)
- Speed: 1 to 3,999

(Example: C100) 1,000 x 100 = 100,000 (pps)

Note An error such as a speed data BCD error (error codes 1500 to 1599) will be generated if the initial speed, origin search high speed, origin search proximity speed, or backlash compensation speed is set higher than the maximum speed set here.

Initial Speed
X axis m+7 (NC113), Y axis m+31 (NC213), Z axis m+55 and U axis m+79 (NC413)

15 14	13 12			00
Factor	$x10^3$	$x10^2$	$x10^1$	$x10^0$

This setting specifies the initial speed.

The permissible setting range is 0 to 500,000 in the following combination. The two leftmost bits are used for setting the factor.

- Factor: 00: x1, 01: x10, 10: x100, 11: x1,000 (pps)
- Speed: 0 to 3,999

(Example: C100) 1,000 x 100 = 100,000 (pps)

Origin Search High Speed
X axis m+8 (NC113), Y axis m+32 (NC213), Z axis m+56 and U axis m+80 (NC413)

15 14	13 12			00
Factor	$x10^3$	$x10^2$	$x10^1$	$x10^0$

This setting specifies the origin search speed until the origin proximity input signal is received.

The permissible setting range is 1 to 500,000 in the following combination. The two leftmost bits are used for setting the factor.

- Factor: 00: x1, 01: x10, 10: x100, 11: x1,000 (pps)
- Speed: 1 to 3,999

(Example: C100) 1,000 x 100 = 100,000 (pps)

Origin Search Proximity Speed
X axis m+9 (NC113), Y axis m+33 (NC213), Z axis m+57 and U axis m+81 (NC413)

15 14	13 12			00
Factor	$x10^3$	$x10^2$	$x10^1$	$x10^0$

This setting specifies the origin search speed until the origin input signal is received.

The permissible setting range is 1 to 10,000 in the following combination. The two leftmost bits are used for setting the factor.

- Factor: 00: x1, 01: x10, 10: x100, 11: x1,000 (pps)
- Speed: 1 to 3,999

(Example: C100) 1,000 x 100 = 100,000 (pps)

Be sure to set the origin search proximity speed so that it is lower than the origin search high speed. If the origin search proximity speed is set equal to or higher than the origin search high speed, an origin search speed error (error code 1603) will be generated.

Origin Compensation Value (Rightmost Word)
X axis m+10 (NC113), Y axis m+34 (NC213), Z axis m+58 and U axis m+82 (NC413)
Origin Compensation Value (Leftmost Word)
X axis m+11 (NC113), Y axis m+35 (NC213), Z axis m+59 and U axis m+83 (NC413)

15 Leftmost word 00				15 Rightmost word 00			
Sign	$x10^6$	$x10^5$	$x10^4$	$x10^3$	$x10^2$	$x10^1$	$x10^0$

This setting specifies the amount of compensation after the origin input signal is detected by an origin search operation. If the compensation is set to anything other than 0, the axis will be moved at the origin search proximity speed for the set amount of compensation after the origin input signal is detected.

- Sign: 0: Positive (CW); 1: Negative (CCW)
- Range: –9,999,999 to 9,999,999 (pulses)

Backlash Compensation
X axis m+12 (NC113), Y axis m+36 (NC213), Z axis m+60 and U axis m+84 (NC413)

15			00
$x10^3$	$x10^2$	$x10^1$	$x10^0$

This setting specifies the backlash compensation.

- Range: 0 to 9,999 (pulses)

Backlash Compensation Speed
X axis m+13 (NC113), Y axis m+37 (NC213), Z axis m+61 and U axis m+85 (NC413)

15 14	13 12			00
Factor	$x10^3$	$x10^2$	$x10^1$	$x10^0$

This setting specifies the speed for outputting the backlash compensation. If “0” is set, then the backlash compensation will be output at 500 pps when the initial speed is less than 500 pps, or at the initial speed when the initial speed is 500 pps or more.

This setting can be used to shorten the positioning time in cases where it has been lengthened due to a large backlash compensation amount at a low speed.

The permissible setting range is 0 to 500,000 in the following combination. The two leftmost bits are used for setting the factor.

- Factor: 00: x1, 01: x10, 10: x100, 11: x1,000 (pps)
- Speed: 0 to 3,999

(Example: 0100) 1 x 100 = 100 (pps)

Acceleration/Deceleration Curve
X axis m+14 (NC113), Y axis m+38 (NC213), Z axis m+62 and U axis m+86 (NC413)

15			00
0	0	0	Designation

This setting specifies the curve to be used for acceleration and deceleration.

- Designation: 0: Trapezoidal; 1: S-curve

Acceleration Time (Rightmost Word)
X axis m+15 (NC113), Y axis m+39 (NC213), Z axis m+63 and U axis m+87 (NC413)
Acceleration Time (Leftmost Word)
X axis m+16 (NC113), Y axis m+40 (NC213), Z axis m+64 and U axis m+88 (NC413)

15 Leftmost word 00				15 Rightmost word 00			
0	0	$x10^5$	$x10^4$	$x10^3$	$x10^2$	$x10^1$	$x10^0$

This setting specifies the time from 0 pps or initial speed until the maximum speed is reached.

- Range: 0 to 250,000 (ms)

Deceleration Time (Rightmost Word)
X axis m+17 (NC113), Y axis m+41 (NC213), Z axis m+65 and U axis m+89 (NC413)
Deceleration Time (Leftmost Word)
X axis m+18 (NC113), Y axis m+42 (NC213), Z axis m+66 and U axis m+90 (NC413)

15 Leftmost word 00				15 Rightmost word 00			
0	0	$x10^5$	$x10^4$	$x10^3$	$x10^2$	$x10^1$	$x10^0$

This setting specifies the time from the maximum speed until 0 pps or initial speed is reached.

- Range: 0 to 250,000 (ms)

Positioning Monitor Time
X axis m+19 (NC113), Y axis m+43 (NC213), Z axis m+67 and U axis m+91 (NC413)

15			00
$x10^3$	$x10^2$	$x10^1$	$x10^0$

After pulse output has been completed, a positioning timer timeout error (error code 8600) will be generated if the positioning completed signal does not turn ON within the time set here. (This function is only enabled for operation modes 2 and 3.)

- Range: 0 to 9,999 (ms)

If the positioning monitor time is set to “0,” the positioning completed signal will be awaited only when an origin search operation is executed. For all other operations (such as jogging, memory operation, and so on), the positioning completed signal will be ignored.

CCW Limit (Rightmost Word)
X axis m+20 (NC113), Y axis m+44 (NC213), Z axis m+68 and U axis m+92 (NC413)
CCW Limit (Leftmost Word)
X axis m+21 (NC113), Y axis m+45 (NC213), Z axis m+69 and U axis m+93 (NC413)

CW Limit (Rightmost Word)
X axis m+22 (NC113), Y axis m+46 (NC213), Z axis m+70 and U axis m+94 (NC413)
CW Limit (Leftmost Word)
X axis m+23 (NC113), Y axis m+47 (NC213), Z axis m+71 and U axis m+95 (NC413)

15 Leftmost word 00				15 Rightmost word 00			
Sign	$x10^6$	$x10^5$	$x10^4$	$x10^3$	$x10^2$	$x10^1$	$x10^0$

These settings specify the CCW and CW software limits.

- Sign: 0: Positive (CW); 1: Negative (CCW)
- Range: –9,999,999 to 9,999,999 (ms)

If the CW software limit is set to less than or equal to the CCW limit, the software limit will not function. When this setting is made, operation proceeds as follows:

- At the beginning of operation, the present position is always 0.
- During axis operation the present position is always refreshed, and if the upper or lower limit is reached positioning will be stopped.

Upper Limit: +9,999,999 (pulses)
Lower Limit: –9,999,999 (pulses)

Reserved
X axis m+24, m+27 (NC113), Y axis m+48, m+51 (NC213), Z axis m+72, m+75 and U axis m+96, m+99 (NC413)

Set to 0000.

4-3-3 Operation Modes

The four operation modes are described below. The following abbreviations are used in the wiring diagrams:

DCRI: Error counter reset input
DCRO: Error counter reset output
IC: Input common
OACI: Origin adjustment command input
OACO: Origin adjustment command output
OPI: Origin proximity input
OS: Origin input signal
PCSI: Positioning completed signal input
PCSO: Positioning completed signal output
PCU: Position Control Unit
SMD: Stepping motor driver

Mode 0

Set mode 0 when using a stepping motor driver. A sensor is connected to the origin input signal (connector pin numbers A14/A15, B14, B15). The response time for the origin input signal is 0.1 ms. (N.O. contact setting)

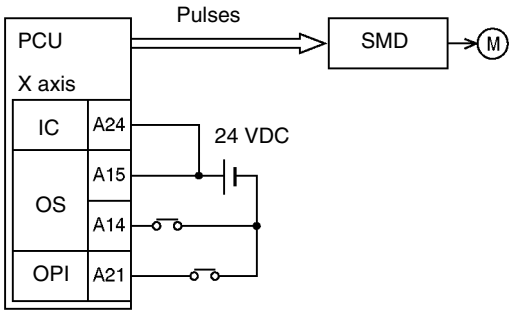

Mode 1

Set mode 1 when using a servomotor driver and connecting a line driver input and a error counter reset output without using a positioning completed signal. The response time for the origin line driver input is 0.1 ms. (N.O. contact setting)

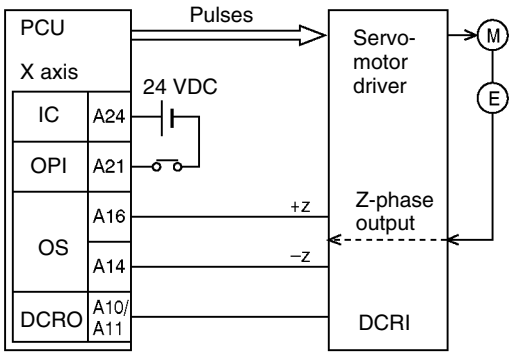

Mode 2

Set mode 2 when using a servomotor driver and connecting a line driver input and a error counter reset output just as in mode 1, but when also using a positioning completed signal.

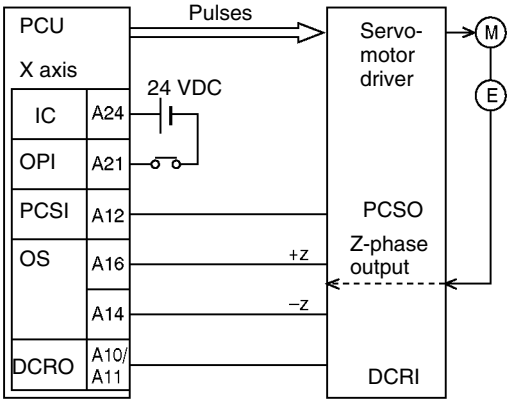

Mode 3

Set mode 3 when using a servomotor driver and also using the origin adjustment command.

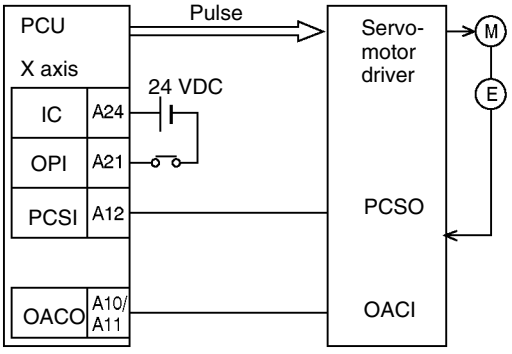

Note In the wiring examples for modes 1 to 3, the servomotor driver used is an OMRON R88D Servomotor Driver. Set the servomotor driver so that the servomotor driver's positioning completed signal is OFF during motor operation and ON while the motor is stopped. If this setting is not made, positioning may become impossible without the positioning completed signal in the operating memory area turning ON.

4-4 Operating Memory Area

The operating memory area is allocated to the Programmable Controller's IR area. The IR area addresses are determined when the Position Control Unit's unit number is set.

The operating memory area is divided into outputs and inputs. Commands related to operations are allocated to the output memory area, and the commands are sent to the Position Control Unit (PCU) when their respective bits are turned ON, or at the rising edge (↑) when the bits are turned ON.

The PCU's status and present position are input from the PCU to the input area. The operating data area exchanges data with the PCU with every I/O refresh, so operating commands and so on can be executed simply by writing to the Programmable Controller's IR area.

Note If the CCW limit setting is equal to or greater than the CW limit setting in the axis parameters area, and if the software limits are disabled, the present position will be "0" when memory operation or direct operation is started.

Operating Memory Area Details

I/O	Model	Words				Bits	Name		Operation
		X axis	Y axis	Z axis	U axis				
Output	NC413	n	n+2	n+4	n+6	00	Mem. operation	Sequence number enable	This setting specifies the sequence number for beginning operation when START or INDEPENDENT START is executed. When START or INDEPENDENT START is executed while this bit is ON, operation will begin with the designated sequence in the Operating Memory Area.
	NC213	n	n+2						
	NC113	n							
						01		START	At the rising edge (↑) when this bit turns ON, START references the sequence number enable bit and begins memory operation.
						02		INDEPENDENT START	At the rising edge (↑) when this bit turns ON, INDEPENDENT START references the sequence number enable bit and begins memory operation. The difference between this command and START is that the completion code is treated as “terminating,” except for when it is set to “bank end.”
						03	Direct operation	ABSOLUTE MOVEMENT	At the rising edge (↑) when this bit turns ON, direct operation is started with the designated position treated as an absolute position. • If ABSOLUTE MOVEMENT is used while the origin is not established, a current position unknown error (error code 5040) will be generated. • If ABSOLUTE MOVEMENT is executed again during axis feeding, or if RELATIVE MOVEMENT is executed, feeding toward the currently designated position will stop, and feeding toward the newly designated position will begin. • The position, speed, and acceleration/deceleration times are designated in the operating data area.

I/O	Model	Words				Bits	Name		Operation
		X axis	Y axis	Z axis	U axis				
Output	NC413	n	n+2	n+4	n+6	04	Direct operation	RELATIVE MOVEMENT	At the rising edge (↑) when this bit turns ON, direct operation is started with the designated position treated as a relative position. • If RELATIVE MOVEMENT is executed again during axis feeding, or if ABSOLUTE MOVEMENT is executed, feeding toward the currently designated position will stop, and feeding toward the newly designated position will begin. • The position, speed, and acceleration/deceleration times are designated in the operating data area.
	NC213	n	n+2						
	NC113	n							
						05		INTERRUPT FEEDING	At the rising edge (↑) when this bit turns ON, interrupt feeding begins for direct operation. • If INTERRUPT FEEDING is used while the origin is not established, axis feeding will be executed with the present position at the beginning of operation taken as “0.” • When INTERRUPT FEEDING is input, the present position becomes the reference and the axis is moved for the designated amount. • The position, speed, and acceleration/deceleration times are designated in the operating data area.
						06	ORIGIN SEARCH		At the rising edge (↑) when this bit turns ON, an origin search is executed. The origin search speed will depend on the speed setting in the axis parameters.
						07	ORIGIN RETURN		At the rising edge (↑) when this bit turns ON, positioning returns to the origin. The origin return speed is set in the operating data area.
						08	PRESENT POSITION CHANGE		At the rising edge (↑) when this bit turns ON, the present position is forcibly changed, and then this position is established as the origin. The position change is set in the operating data area.
						09	JOG (speed feeding)		When this bit turns ON, jogging (speed feeding) is executed. The jogging speed is set in the operating data area.
						10	Direction designation		This designates the direction for when JOG or INTERRUPT FEEDING are executed. (OFF: CW direction; ON: CCW direction)

I/O	Model	Words				Bits	Name	Operation
		X axis	Y axis	Z axis	U axis			
Output	NC413	n	n+2	n+4	n+6	11	TEACH	At the rising edge (↑) when this bit turns ON, the teaching operation is executed. If TEACH is executed while the origin is not established, a current position unknown error (error code 5040) will be generated. The teaching position number is set in the operating data area.
	NC213	n	n+2					
	NC113	n						
						12	RELEASE PROHIBIT	At the rising edge (↑) when this bit turns ON, the pulse output prohibition is released. (Refer to *9-8 Releasing Pulse Output Prohibition*.) Pulse output is prohibited when the following inputs are received: • CW or CCW limit input • Software limit • Emergency stop input
						13	Error counter reset output, origin adjustment command output	This can be used as a general-purpose output in operation mode 0. (Refer to *9-9 Error Counter Reset Output and Origin Adjustment Command Output*. 1: Signal ON; 0: Signal OFF When an origin search is performed in operation modes 1 to 3, outputs are automatically set as error counter reset and origin adjustment command outputs. Refer to *Section 6 Defining the Origin*.
						14	Override enable	This bit enables or disables the override function. • When this bit is ON (i.e., when the override is enabled), the following value will be used as the speed: Feed speed = (speed designation) x override / 100 • When this bit is OFF (i.e., when the override is disabled), the override will be treated as 100%. The override is set in the operating data area.
						15	STOP	At the rising edge (↑) when this bit turns ON, positioning is decelerated to a stop. Executing STOP has the following effects in memory operation and direct operation: • During memory operation, the Waiting for Memory Operation Bit turns ON after STOP is executed. • During direct operation, the Deceleration Stop Execution Bit turns ON after STOP is executed.

I/O	Model	Words				Bits	Name	Operation
		X axis	Y axis	Z axis	U axis			
Output	NC413 NC213 NC113	n+1 n+1 n+1	n+3 n+3	n+5	n+7	00 to 07	Sequence number	This setting specifies, in BCD, the first sequence number (00 to 99) to be executed in memory operation.
						08	FORCED INTERRUPT FORCED INTERRUPT	At the rising edge (↑) when this bit turns ON, the memory operation is forcibly ended and the memory operation for a specified sequence number is forcibly executed instead. (Refer to *9-4 Forced Interrupt*.) This command is only enabled during memory operation.
						09 to 11	Reserved	---
	NC413 NC213 NC113	n+1 n+1 n+1				12	WRITE DATA	At the rising edge (↑) when this bit turns ON, data is written by means of a data transfer. The Y, Z, and U bits are not used. Word n+1, bit 12 is used to write the data for all axes (i.e., not just the X axis).
						13	READ DATA	At the rising edge (↑) when this bit turns ON, data is read by means of a data transfer. The Y, Z, and U bits are not used. Word n+1, bit 13 is used to read the data for all axes (i.e., not just the X axis).
						14	SAVE DATA	At the rising edge (↑) when this bit turns ON, data is saved to flash memory. The Y, Z, and U bits are not used. Word n+1, bit 14 is used to save the data for all axes (i.e., not just the X axis).
						15	Reserved	---
Input	NC413 NC213 NC113	n+8 n+4 n+2	n+11 n+7	n+14	n+17	00 to 03	Output code	With memory operation, the output code set for a positioning sequence is output when the positioning is completed. (“0” at the beginning of memory operation.)
						04	Waiting for memory operation	Turns ON during memory operation for an independent start waiting, deceleration stop, or error stop. It turns OFF for a memory operation start.

I/O	Model	Words				Bits	Name	Operation
		X axis	Y axis	Z axis	U axis			
Input	NC413 NC213 NC113	n+8 n+4 n+2	n+11 n+7	n+14	n+17	05	Positioning Completed Flag	Turns ON when the following operations are completed. Direct or Manual Operation: ORIGIN SEARCH, ORIGIN RETURN, ABSOLUTE MOVEMENT, RELATIVE MOVEMENT, INTERRUPT FEEDING Memory Operation: Memory operation completed, independent end Turns OFF when the power is turned on or when the next axis operation is started. Stays OFF when an emergency stop signal or a STOP command is received during axis operation. If the positioning monitor time is set to 0 in mode 2 or 3, the positioning completed signal from the Servo Driver will be ignored and the Positioning Completed Flag will turn ON when the operation is continued.
						06	No Origin Flag	OFF when the origin is established, and ON when the origin is not established.
						07	Origin Stop Flag	ON when stopped at the origin. OFF at all other times.
						08	Zone 0	ON when within the zone 0 range and OFF when outside of that range, regardless of whether or not the origin is established.
						09	Zone 1	Same as for zone 0.
						10	Zone 2	Same as for zone 0.
						11	Teaching completed	Turns ON when teaching is completed. Turns OFF when power is turned on or when teaching is started.
						12	Error Flag	Turns ON when an error occurs. Turns OFF the next time a memory operation, direct operation, or data write or read operation is completed normally.
						13	Busy Flag	Turns ON when any processing begins, and turns OFF when the processing is completed. When the axis is designated, the specified Busy Flag is used. The X-axis Bit turns ON during the initial processing when the PCU is powered up or restarted, and it turns OFF when the initial processing is completed. No matter how short the processing time is, this bit will turn ON for at least one cycle.

I/O	Model	Words				Bits	Name	Operation
		X axis	Y axis	Z axis	U axis			
Input	NC413 NC213 NC113	n+8 n+4 n+2	n+11 n+7	n+14	n+17	14	Data transferring	Turns ON when a data transfer or data save operation is started, and turns OFF when the data transfer or save operation is completed. Turns OFF when the power is turned on or when the PCU is restarted. Only the X-axis Bit is enabled.
						15	Deceleration stop execution	Turns ON when axis operation is stopped by an emergency stop input or a STOP command during axis operation. Turns OFF when operation begins again or on the rising edge of the pulse output prohibition release signal (RELEASE PROHIBIT).
Output	NC413 NC213 NC113	n+9 n+10 n+5 n+6 n+3 n+4	n+12 n+13 n+8 n+9	n+15 n+16	n+18 n+19	00 to 15 00 to 15	Present position (rightmost word) Present position (leftmost word)	Outputs the present position in 8 digits BCD. 15 … 00: $x10^3$, $x10^2$, $x10^1$, $x10^0$ 15 … 00: Sign, $x10^6$, $x10^5$, $x10^4$ Sign: 0: Pos (CW); 1: Neg. (CCW)

4-5 Operating Data Area

The operating data area is set by the common parameter area. (Refer to *4-2 Common Parameter Area*). It is determined by designating the area's classification and beginning word. Either the DM or EM area can be used for the operating data area.

Contents Set by Operating Data Area

The operating data area is divided into outputs and inputs. Words I to I+5 constitute the output (common) area for setting information related to transferring data. The remaining words are used as an output area settings such as positions and speeds for direct operation, and as an area for inputting axis I/O signal status, sequence numbers during memory operation, and error codes.

The operating data area exchanges data with the PCU with every I/O refresh, so data such as positions and speeds for direct operation can be transferred to the PCU simply by writing to the Programmable Controller's DM or EM area.

Operating Data Area Contents

For details regarding the contents of the operating data area areas, refer to the *Operating Data Area* table on page 64.

4-6 Positioning Sequence Details

This section explains in detail the format and settings of positioning sequences. Positioning sequences are designated from the Programmable Controller when memory operation is started, and they set data required for positioning, such as the target speed number, acceleration/deceleration number, and so on.

Note With previous Position Control Units, data such as the target speed, acceleration/deceleration time, and so on, was set for "positioning actions," which were the basic unit of positioning. With the C200HW-NC113/NC213/NC413 Position Control Unit, however, position data is set independently. These Units are designed so that the position number used is the same as the number of the

sequence that is started. For example, if START is executed with sequence #50 designated, positioning will be carried out using the position data set for position #50. This positioning sequence can be used again with only the position changed, and with the other data settings left unchanged.

Sequence Format

Each positioning sequence is configured of three words, as shown below. Up to 100 of these sequences can be set for each axis, and transferred to the PCU and saved.

	15 – 12	11 – 08	07 – 04	03 – 00
1000	Axis designation	Output code	0	Completion code
1001	Dwell time number		Accel. time number	Decel. time number
1002	Initial speed number		Target speed number	

Axis Designation

To designate the axes to be started, set the bits for those axes to “1.” The configuration is as follows:

Bit 15	14	13	12
U axis	Z axis	Y axis	X axis

For example, to start only the X axis, set these bits to “0001.” To start the X and Z axes for linear interpolation, set these bits to “0101.”

Note When setting the sequence data using the SYSMAC-NCT Support Tool, more than one axis designation cannot be made for one sequence data number. If more than one axis designation is made for one sequence data number, an Axis Designation Error will occur.
For example, an Axis Designation Error will occur in the following cases;
Axis designation of “XY” for the X-axis sequence data No. 100
Axis designation of “Y” for the Y-axis sequence data No. 100.

Linear Interpolation

If two or more axes are selected with the “axis designation” setting, the designated axes will be used together for linear interpolation. The target speed set for the positioning sequence that is started will become the interpolation speed. For example, when linear interpolation is executed using the X and Y axes, the speeds for each axis will be as follows:

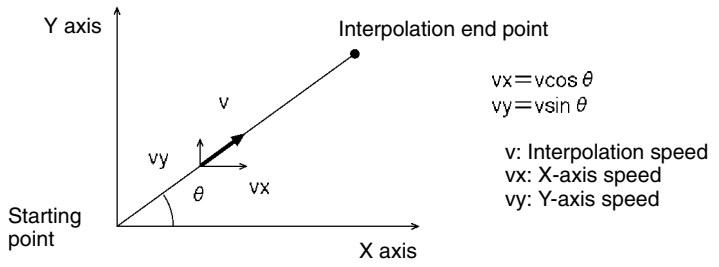

Output Code

The “output code” setting specifies an output code from 0 to F (hexadecimal) to be output when positioning is completed with memory operation.

Name	Model	Operating memory area				Bits
		X axis	Y axis	Z axis	U axis	
Output code	NC413	n+8	n+11	n+14	n+17	00 to 03
	NC213	n+4	n+7			
	NC113	n+2				

If the Sequence Number Enable is “1,” the output code is “0” when memory operation is started (by START or INDEPENDENT START).

Example
Sequence #0: Continuous completion (output code: 2)

Sequence #1: Terminating completion (output code: 4)
Sequence #2: Automatic completion (output code: 6)
Sequence #3: Bank end completion (output code: 8)

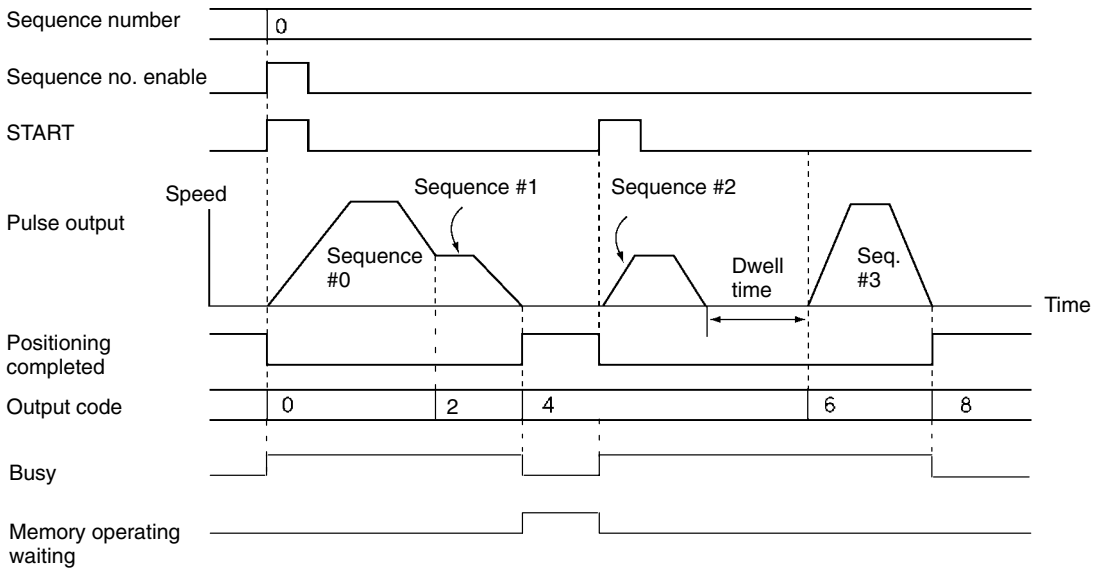

Completion Code The seven completion codes are described below.

Code	Name	Description	Operation
0	Terminating	The sequence is executed, and then positioning is stopped until START is executed for the next sequence.	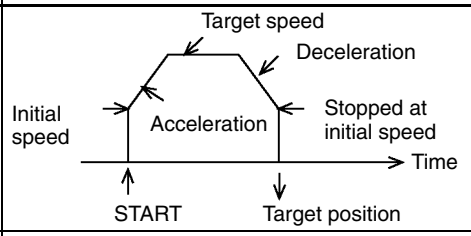
1	Automatic	The sequence is executed, and then positioning is paused for the duration of the dwell time before the next sequence is started automatically.	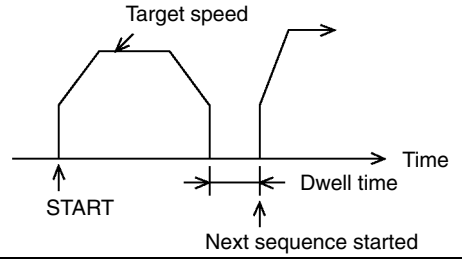
2	Continuous	The sequence is executed, and then positioning continues with the next sequence without stopping at the target position. (If a dwell time is set, however, then positioning will pause for the duration of the dwell time.)	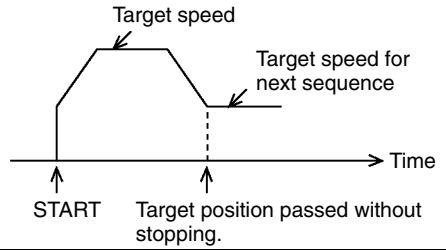
3	Bank end	Positioning is stopped after completion. When START is next executed, positioning starts again with the sequence designated by the “sequence number enable” setting.	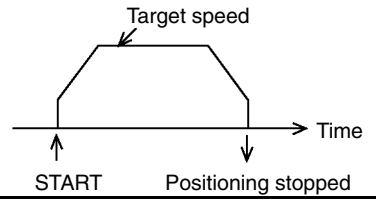

Code	Name	Description	Operation
4	Speed control	"Speed control" is similar to the "continuous output" in previous Position Control Units. Pulse output is maintained at the speed set for the sequence. The present position is calculated even during continuous output. The direction of the pulse output is determined by the "sign" set for the position data. To stop this pulse output, use the STOP command.	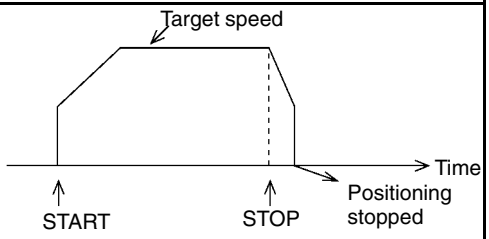 **Note** The initial speed is used at the end.
5	Interrupt feeding (forward direction)	"Interrupt feeding" is similar to the "positioning with continuous output" in previous Position Control Units." Pulse output is maintained at the speed set for the sequence. The direction of the pulse output is determined by the "sign" set for the position data. Following an interrupt input, the axis is moved from the input position by a specified amount in the same direction as the pulse output, and then stopped.	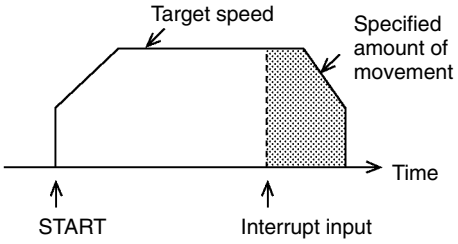
6	Interrupt feeding (reverse direction)	Following an interrupt input, the axis is moved from the input position by a specified amount in the direction opposite to the original pulse output, and then stopped. The rest of this operation is the same as for interrupt feeding in the forward direction (described above).	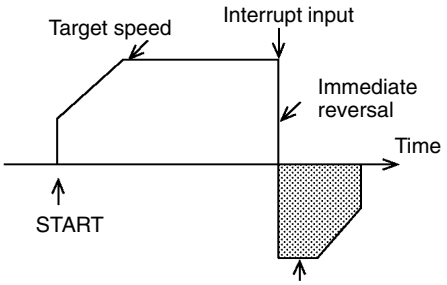

Dwell Time Number

This setting specifies the dwell time number, from 00 to 19 (BCD). The contents of the settings are as follows:

00: Dwell time not used.
01 to 19: Designate dwell time numbers 1 to 19.

The dwell time can be set from 0.01 s to 9.99 s (unit: 0.01 s). The timing of the next start following the elapse of the dwell time differs depending on which operation mode is used.

Operation Mode 0 or 1
The next operation is enabled when the designated dwell time elapses following the completion of pulse output.

Operation Mode 2 or 3
The next operation is enabled when the designated dwell time elapses after the servomotor driver's positioning completed signal turns ON following the completion of pulse output.

Acceleration and Deceleration Time Numbers

These settings specify the acceleration and deceleration times for pulse output, by setting acceleration/deceleration time numbers from 1 to 9 (BCD). When either of these is set to "0," the acceleration/deceleration time set in the axis parameters area is used.

Initial Speed and Target Speed Numbers

These settings specify the initial speed and target speed for pulse output, by setting speed numbers from 00 to 99 (BCD).

4-7 Setting Data With the SYSMAC-NCT Support Tool

When the Position Control Unit is mounted to a C200HX/HG/HE-series Programmable Controller, data can be easily set using the SYSMAC-NCT Support Tool. The SYSMAC-NCT Support Tool can be used for setting, transferring, and saving data, and for monitoring the Position Control Unit's status.

For details regarding SYSMAC-NCT Support Tool operation, refer to the *SYSMAC-NCT Support Tool Operation Manual (W324)*.

Note Position Control Units for which the SYSMAC-NCT Support Tool is used for transferring and saving data and for monitoring PCU status must be mounted to the Programmable Controller's CPU Rack or Expansion I/O Rack. A PCU that is mounted to a Remote I/O Slave cannot be accessed.

4-8 Setting Data for Unused Axes

The data settings required when not using all axes for the C200HW-NC213/413 are explained below.

4-8-1 Settings Required for Unused Axes

At power up or restart, the PCU checks the parameters for all axes. If illegal data is detected, an error is generated for the relevant data and all operations other than data transfer or saving are disabled. Also, if an attempt to transfer illegal data is made, an error is generated and all axes are decelerated to a stop. Therefore, parameters must be set correctly for all axes, including unused axes.

In particular, if the DM area is specified in the parameter designation setting in the common parameter area (i.e., if DM area word m+2 is set to 0001 or 0101), because the parameters for all axes are transferred at power up or restart, the parameters for all axes must be set, including those for unused axes.

The settings that are necessary for unused axes when the DM area is specified in the parameter designation setting are given in the following table. Values other than 0 must be set for maximum speed, origin search high speed, and origin search proximity speed, even for unused axes. When using the default settings for the parameters saved in the PCU's flash memory, there is no settings are required.

Address				Name	Description	Default setting (see note)
NC113	NC213	NC413				
X axis	Y axis	Z axis	U axis			
m+4	m+28	m+52	m+76	I/O settings	Even if these settings are not made for unused axes, there will be no affect on the operation of the used axes. Depending on the wiring, however, sensor input errors will be generated for unused axes. To eliminate sensor input errors, perform wiring so that emergency stop input and limit input are ON. (Refer to *2-6 Connection of Unused Axes*.) Using bit 04 in the following way, it is possible to eliminate the need for wiring the limit input signal. Bit 04 (limit input signal type) 0: N.C. input — With this setting, it is necessary to connect an input power supply and supply power. 1: N.O. input — With this setting, wiring is not necessary (since the signal will be deemed to be ON).	0060
m+6	m+30	m+54	m+78	Maximum speed	Make these settings so that the following condition is satisfied: 0 < Origin search proximity speed < Origin search high speed ≦ Maximum speed Example Maximum speed: C500 (500,000 pps) Origin search high speed: C500 (500,000 pps) Origin search proximity speed: C010 (10,000 pps)	C500
m+8	m+32	m+56	m+80	Origin search high speed		8250
m+9	m+33	m+57	m+81	Origin search proximity speed		4250

Note The default settings are those saved in the PCU's flash memory.

SECTION 5
Transferring and Saving Data

The information in this section is required for operating the motor. It explains how to transfer and save parameters and data.

5-1 Transferring and Saving Data 96
5-2 Writing Data with the WRITE DATA Bit 99
5-2-1 Outline 100
5-2-2 Timing Chart for Writing Data 101
5-2-3 Example of the Write Data Program 101
5-3 Reading Data with the READ DATA Bit 103
5-3-1 Outline 103
5-3-2 Timing Chart for Reading Data 104
5-3-3 Data Reading Program Example 105
5-4 Writing Data with IOWR 107
5-4-1 Outline 107
5-4-2 Instruction Specifications 108
5-4-3 Flags Used 108
5-4-4 Precautions when Using IOWR 109
5-4-5 IOWR Program Example 109
5-5 Reading Data with IORD 110
5-5-1 Outline 110
5-5-2 READ DATA Procedure 110
5-5-3 Instruction Specifications 111
5-5-4 Flags Used 111
5-5-5 Precautions when Using IORD 112
5-5-6 IORD Program Example 112
5-6 Creating and Transferring Data with the Support Tool 113
5-7 Saving Data 114
5-7-1 Flash Memory 114
5-7-2 Procedure for Saving Data 114
5-7-3 Timing Chart for Saving Data 115

5-1 Transferring and Saving Data

Transferring Data

With memory operation, the Position Control Unit (PCU) is operated by specifying positioning sequences that have been set for the PCU. (Refer to *4-6 Positioning Sequence Details*.) Data must be transferred because various kinds of data, including positioning sequences, are created by the user according to the purpose of the operation and then saved to the PCU.

To modify part of the data, transfer it first by specifying its address.

Data can be transferred in the following ways:

1, 2, 3...

1. Using a Data Transfer Bit. Refer to *5-2 Writing Data with the Data Transfer Bit* and *5-3 Reading Data with the Data Transfer Bit*.
2. Using the IOWR and IORD instructions. Refer to *5-4 Writing Data with IOWR* and *5-5 Reading Data with IORD*.
3. Using the NC Support Tool. Refer to *5-6 Creating and Transferring Data with SYSMAC-NCT Support Tool*.

Note

1. Do not attempt other data transfers or storage operations while a data transfer is already in progress, or it will result in a multiple start error (error code 8000).
2. Carefully check to be sure that the parameters and data have been properly set for correct operation.

Saving Data

The transferred data is written to the Position Control Unit's memory, but it will be lost if the power is turned off or if the Unit is restarted. To keep the transferred data permanently in the Position Control Unit, it will need to be saved there. (Refer to *5-7-2 Procedure for Saving Data*.) Once saved, the data is kept in the flash memory of the Position Control Unit, and can be used the next time the power is turned on or the Unit is restarted. If the data is merely transferred without being saved, when the power is cut off the contents of the memory will revert to whatever was saved previously.

The saved data is automatically transferred from the flash memory to the Unit's internal memory as soon as the Unit's power is turned on or as soon as the Unit is restarted.

By means of the common parameter settings, either the flash memory or the DM can be selected for the reading of axis parameters.

Note

1. Do not turn off the power or restart the Unit while the data is being saved. It can cause a fault in the Unit's internal flash memory. Saving data may take up to 30 seconds.
2. Data cannot be saved while a data transfer is in progress or while the Unit is busy. Any attempt to execute a save will result in a multiple start error (error code 8000).

3. There is a limit on the number of times you can read something using the flash memory. Set this so that up to 100,000 data saving operations can be performed.

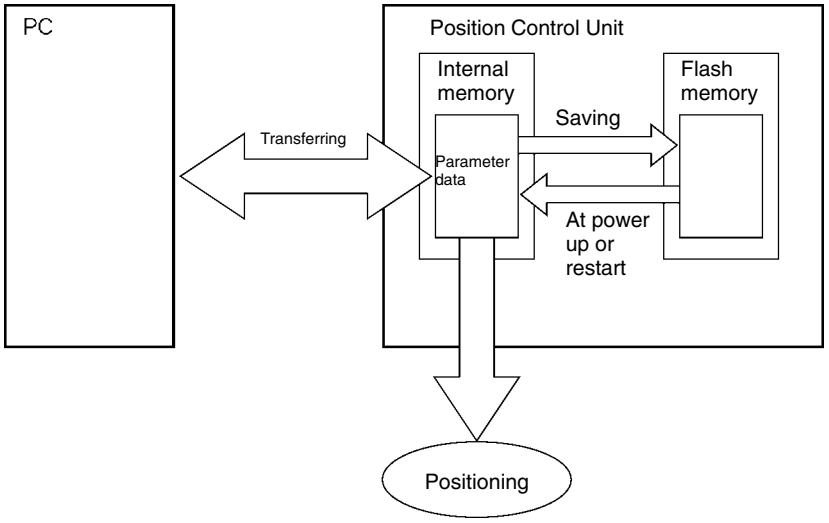

Data that Can be Saved and/or Transferred

All the following data used by the Position Control Unit can be read, written, and saved to the flash memory.

The following types of data can be saved together in the flash memory.

- Axis parameters (see note)
- Positioning sequences
- Speeds
- Positions
- Acceleration times
- Deceleration times
- Dwell times
- Zones

Note When the power is turned on or when the Unit is restarted, a choice is available by using Specify Parameters in the DM area common parameters (refer to *4-2 Common Parameter Area*) between sending the axis parameters automatically from the DM area to the Position Control Unit or using the axis parameters saved in the Position Control Unit.

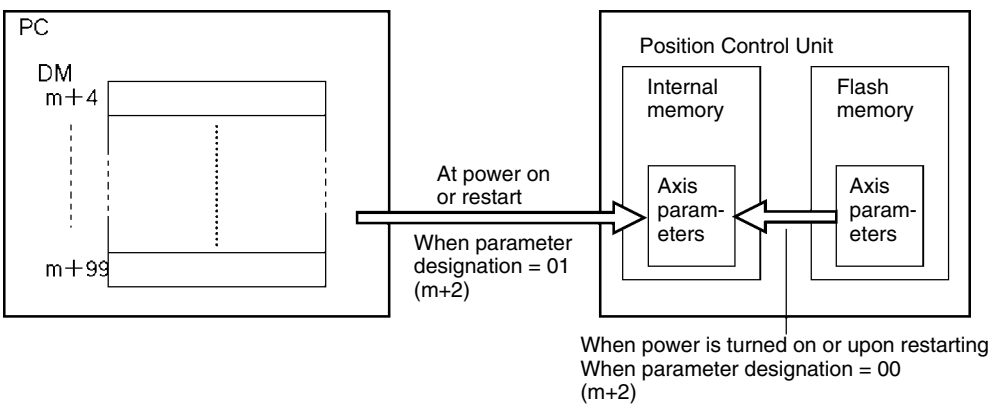

Data Addresses

Each data item has its own address in the Position Control Unit, and this address is used to identify the write destination and read source when data is transferred. One word (16 bits) is used to designate each address. It is not possible to transfer data extending across axis parameters and data for the X, Y, Z and U axes.

For the configuration of the various data areas, refer to *Section 4 Data Areas*.

Address	C200HW-NC113		C200HW-NC213		C200HW-NC413	
0004 to 0099	Axis parameters (one axis)		Axis parameters (two axes)		Axis parameters (four axes)	
1000 to 1297	For X Axis	Positioning sequences	For X Axis	Positioning sequences	For X Axis	Positioning sequences
1300 to 1399		Speeds		Speeds		Speeds
1400 to 1598		Positions		Positions		Positions
1600 to 1618		Acceleration times		Acceleration times		Acceleration times
1620 to 1638		Deceleration times		Deceleration times		Deceleration times
1640 to 1659		Dwell times		Dwell times		Dwell times
1660 to 1670		Zones		Zones		Zones
2000 to 2297			For Y Axis	Positioning sequences	For Y Axis	Positioning sequences
2300 to 2399				Speeds		Speeds
2400 to 2598				Positions		Positions
2600 to 2618				Acceleration times		Acceleration times
2620 to 2638				Deceleration times		Deceleration times
2640 to 2659				Dwell times		Dwell times
2660 to 2670				Zones		Zones
3000 to 3297					For Z Axis	Positioning sequences
3300 to 3399						Speeds
3400 to 3598						Positions
3600 to 3618						Acceleration times
3620 to 3638						Deceleration times
3640 to 3659						Dwell times
3660 to 3670						Zones
4000 to 4297					For U Axis	Positioning sequences
4300 to 4399						Speeds
4400 to 4598						Positions
4600 to 4618						Acceleration times
4620 to 4638						Deceleration times
4640 to 4659						Dwell times
4660 to 4670						Zones

Data Checking

The values of all data and parameters are checked when data is transferred, at the time of writing. The values of data written by data transfer are checked, and the error codes generated range from 1000 to 4019. When an error code is generated, the data following the error is not written.

Example:

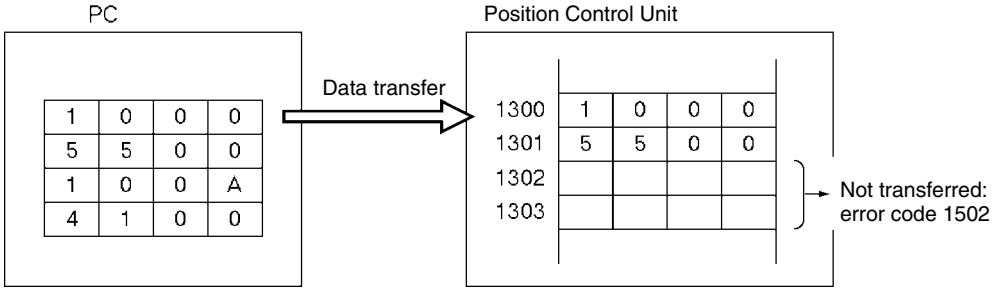

If an error occurs while the axis is operating, all the axes will come to a deceleration stop.

- If an error is detected by the data check, the correct data should be sent again.
- If the data transfer reaches completion without error, the error will have been resolved.
- If the data is stored or the instruction to activate is executed without the correct data being re-sent, the error will be resolved but the data after the error will not be transmitted. In this situation, an abnormal operation may result.

Caution The Intelligent I/O Write (IOWR) and Intelligent I/O Read (IORD) instructions transfer all data indiscriminately at execution. For this reason, if the IOWR or IORD instructions are executed consecutively within the same cycle, an error occurring at data transfer execution may not be output to the operating memory area, in the way shown below.

Example:

Transfer Error Output to CPU Unit

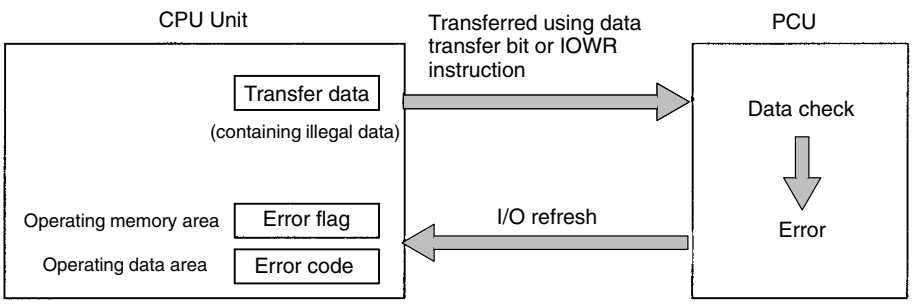

Transfer Error Not Output to CPU Unit

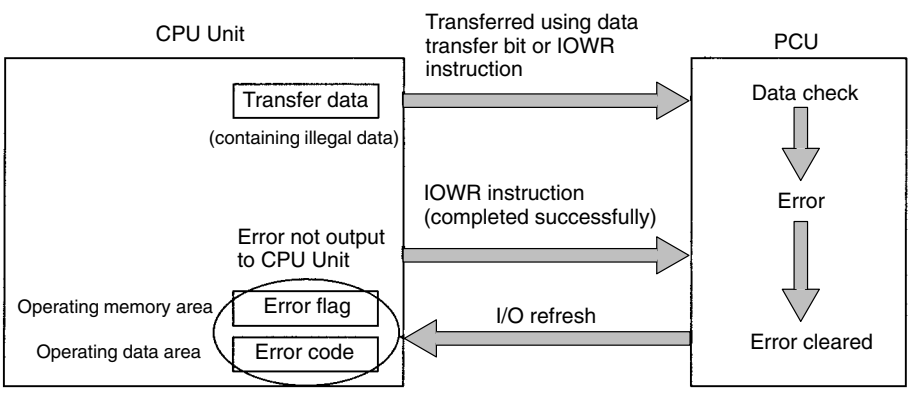

5-2 Writing Data with the WRITE DATA Bit

This section explains the procedures for writing to the Position Control Unit data allocated to the operating memory area using WRITE DATA (word n+1 bit 12). A program example is also provided.

Note
1. Take care not to turn off the power supply or restart the Unit while a data transfer is in progress. The Position Control Unit will not operate normally unless all data is transferred. If there is an interruption, the data should be re-sent.
2. It is possible to write data while pulses are being output, but not while data is being read or stored. If attempted, it will result in a multiple start error (error code 8000).

3. When transferring data using WRITE DATA, the data must be transferred in data units. Data transfer should not start or end part-way through the data. For example, with X-axis sequence #0, the data unit becomes three words consisting of addresses from 1000 to 1002. If transfer is started or ended part-way through, a write transfer words error or write destination address error (error code 8312) will be generated.
4. Any word in the DM or EM area, except for DM 1000 to DM 1999, can be specified in I+1 (transfer source word) of the Information for Writing Data settings. If a word in the range DM 1000 to DM 1999 is specified, a write transfer source word error (error code 8311) will be generated.

5-2-1 Outline

The following example of positioning sequences summarizes how to write data to the Position Control Unit.

When the WRITE DATA bit (word n+1, bit 12) in the operating memory area is turned ON, the data in the PC's DM or EM area designated in the operating data area, along with the number of transfer words, the transfer source word, and the transfer destination address, are written to consecutive addresses at the Position Control Unit.

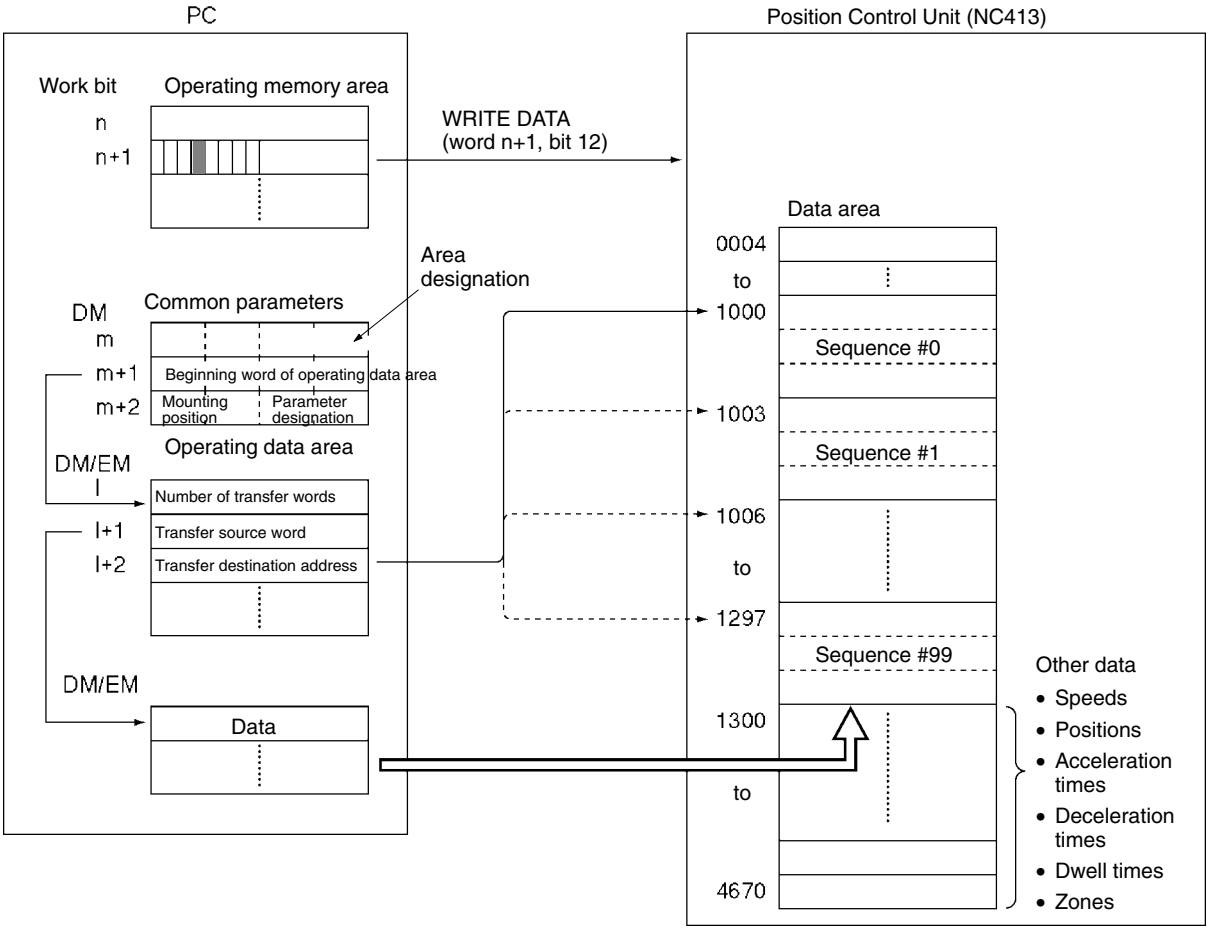

The "n" in the operation memory area is the beginning word address in the IR area, and is determined when the unit number is specified.

The "m" in the common parameters is the beginning word address in the DM area, and is determined when the unit number is specified.

The "I" in the operation data area is the beginning word address in the data transfer area specified by the common parameters.

With data writing, 672 words of data in consecutive addresses can be sent at once.

Data Writing Procedure

1, 2, 3...

1. Setting the common parameters: Refer to *4-2 Common Parameters*
   m: Set the operating data area either to DM or to EM.
   m+1: Set the operating data area beginning word (I).
   m+2: Designate mounting position and parameters.
2. Powering up again or restarting
   The data for the common parameters set in 1 above is enabled.
3. Setting the operating data area
   I: Total number of words (4 digits BCD) for the data to be written to the Position Control Unit.
   I+1: Beginning word address (4 digits BCD) for the PC's DM or EM area setting the data.
   I+2: Beginning address (4 digits BCD) of Position Control Unit data area where data is to be stored.
4. Setting data
   Set data to be written to the Position Control Unit in the DM or EM area specified by words I and I+1.
5. Executing WRITE DATA
   Turn the WRITE DATA Bit (word n+1, bit12) from OFF to ON.

The operations in (1) and (2) above are required when using the Position Control Unit for the first time or when modifying the data in the common parameters.

5-2-2 Timing Chart for Writing Data

Writing data is possible even during axis operation.
It is not possible to write data and read data at the same time.
The following diagram is a timing chart for writing data.

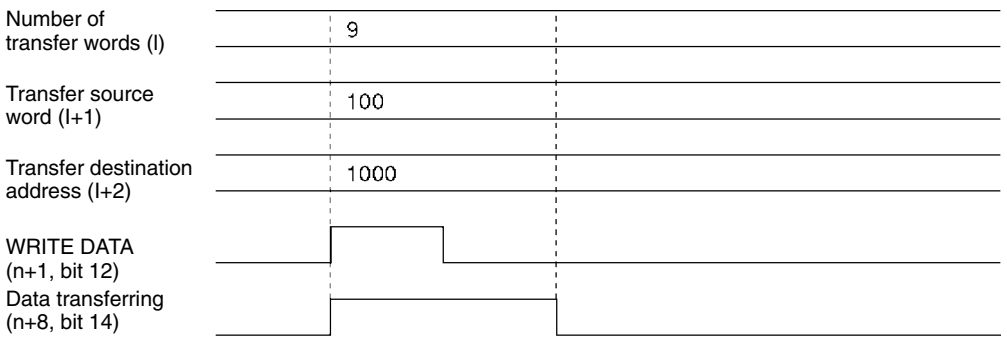

When the data writing operation is completed, the Data Transferring Bit (word n+8, bit 14) is turned from ON to OFF. If an error occurs during data transfer, the Error Flag (word n+8, bit 12) is turned ON and the error code is output to I+27 in the operating data area. Check this error code to determine the cause of the error and correct it.

5-2-3 Example of the Write Data Program

A sample program is given below for writing the following speed data to the Position Control Unit. The Position Control Unit to be used will be a C200HW-NC413 designated as Unit 0.

Allocation of Areas

The common parameters are from DM1000 to DM 1002.
The operating memory area is from word 100 to word 119.
The beginning word of the operating data area is DM 0400.

Speeds to be Transferred

The beginning word address for the data transfer area is to be set at DM 0500, and the other settings are as follows:

Data	Address (transfer destination)	DM (transfer source)	Setting
Speed #0	1300	0500	1000
Speed #1	1301	0501	5500

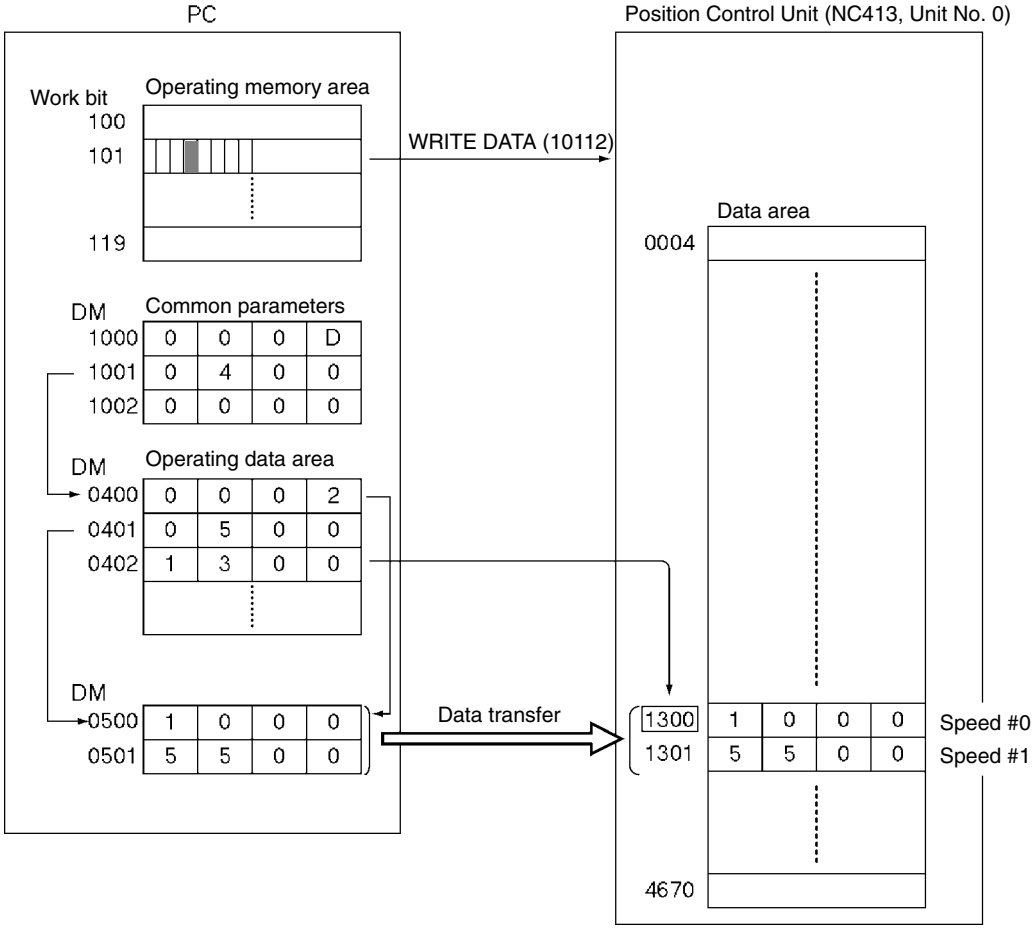

Example of Program The work bit 23500 is used to begin writing.

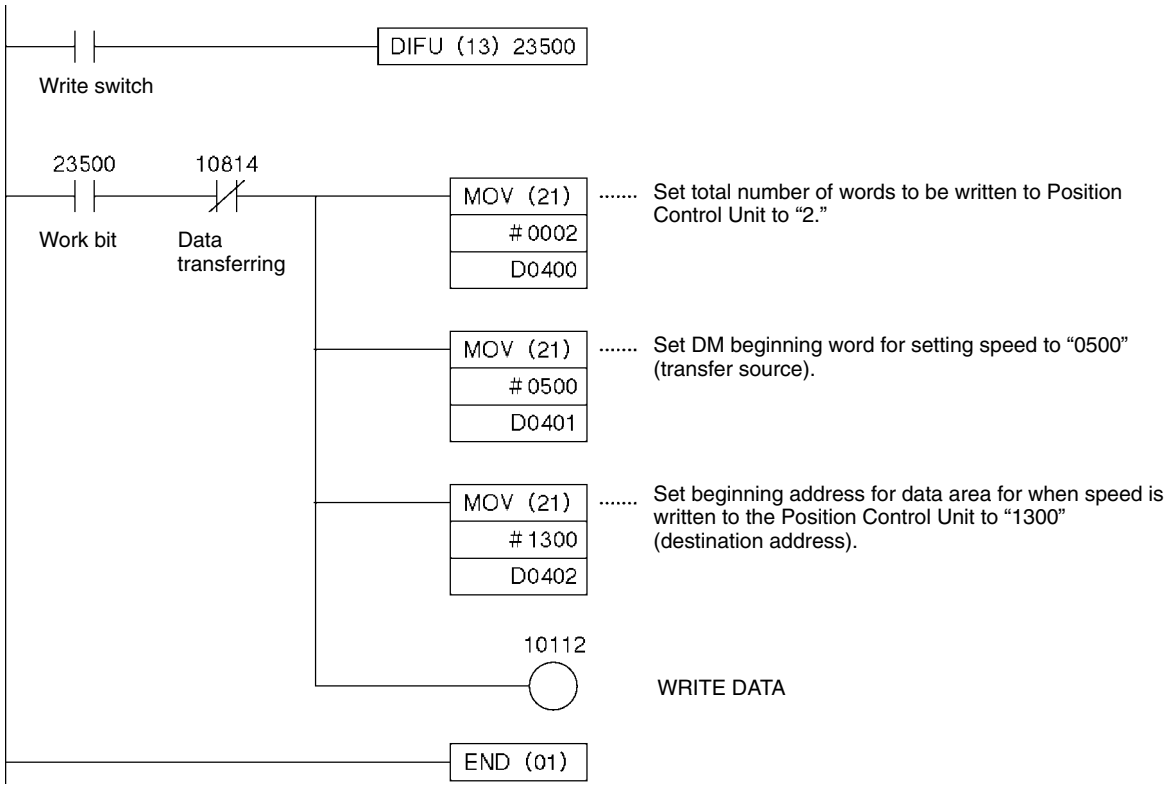

5-3 Reading Data with the READ DATA Bit

This section explains the procedures for reading data allocated to the operating memory area from the Position Control Unit using the READ DATA Bit (word n+1, bit 13). A program example is also provided.

Note

1. Data can be read while pulses are being output, but not while data is being written or saved. If attempted, it will result in a multiple start error (error code 8000).
2. When transferring data using READ DATA, the data must be transferred in data units. Data transfer should not start or end part-way through the data. For example, with X axis sequence #0, the data unit becomes three words, in addresses 1000 to 1002. If the transfer is started or ended part-way through, a read transfer words error (error code 8320) or read transfer source address error (error code 8321) will be generated.
3. Any word in the DM or EM area, except for DM 1000 to DM 1999, can be specified in I+5 (transfer destination word) of the data transfer area. If a word in the range DM 1000 to DM 1999 is specified, a read transfer destination word error (error code 8322) will be generated.

5-3-1 Outline

When the READ DATA Bit (word n+1, bit13) in the operating memory area is turned ON, the Position Control Unit's consecutive address data, along with the number of transfer words, the transfer source address, and the transfer destination word designated by the operating data area are read to the PC's DM or EM area.

For an outline, refer to *5-2 Writing Data with the WRITE DATA Bit*. With data reading, 672 words of data in consecutive addresses can be read at one time.

READ DATA Procedure

1, 2, 3...

1. Setting common parameters: Refer to *4-2 Common Parameters*.
   m: Set the operating data area either to DM or to EM.
   m+1: Set the operating data area beginning word (I).
   m+2: Designate mounting position and parameters.
2. Powering up again or restarting
   The data for the common parameters set in 1 above will be enabled.
3. Setting operating data area
   I+3: Total number of words to be read from the PCU (4 digits BCD)
   I+4: Beginning address of PCU's data area (4 digits BCD).
   I+5: Beginning word address (4 digits BCD) of PC's DM or EM area where read data will be stored.
4. Execute READ DATA.
   Turn the READ DATA Bit (word n+1, bit 13) from OFF to ON.

The operations in (1) and (2) above are required when using the Position Control Unit for the first time or when modifying the data in the common parameter area.

5-3-2 Timing Chart for Reading Data

Reading data is possible even during axis operation.
It is not possible to write and read data at the same time.
The following diagram is a timing chart for reading data.

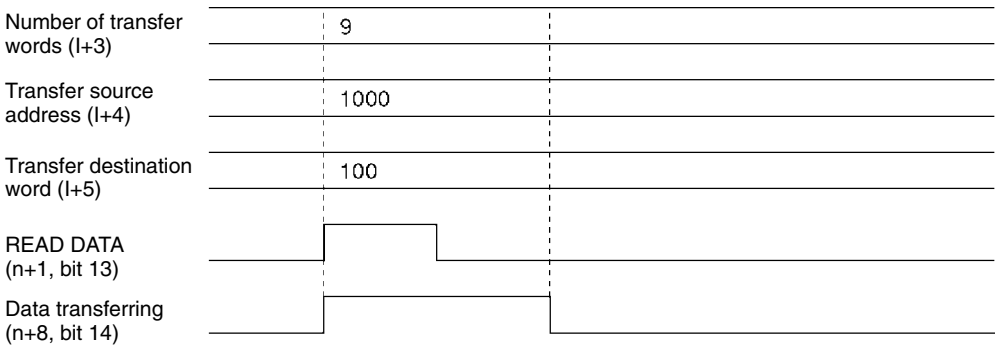

After the data reading operation has been completed, the Data Transferring Bit (word n+8, bit 14) is turned from ON to OFF. If an error occurs during data transfer, the Error Flag (word n+8, bit 12) will be turned ON and the error code will be output to I+27 in the operating data area. Check this error code to determine the cause of the error and correct it.

5-3-3 Data Reading Program Example

In this example, speeds #0 and #1 written in *5-2 Writing Data with the WRITE DATA Bit* are read. The conditions to be set are the same as those for the data writing example. The beginning word of the DM area, where the read data is to be stored, is set to DM 0500.

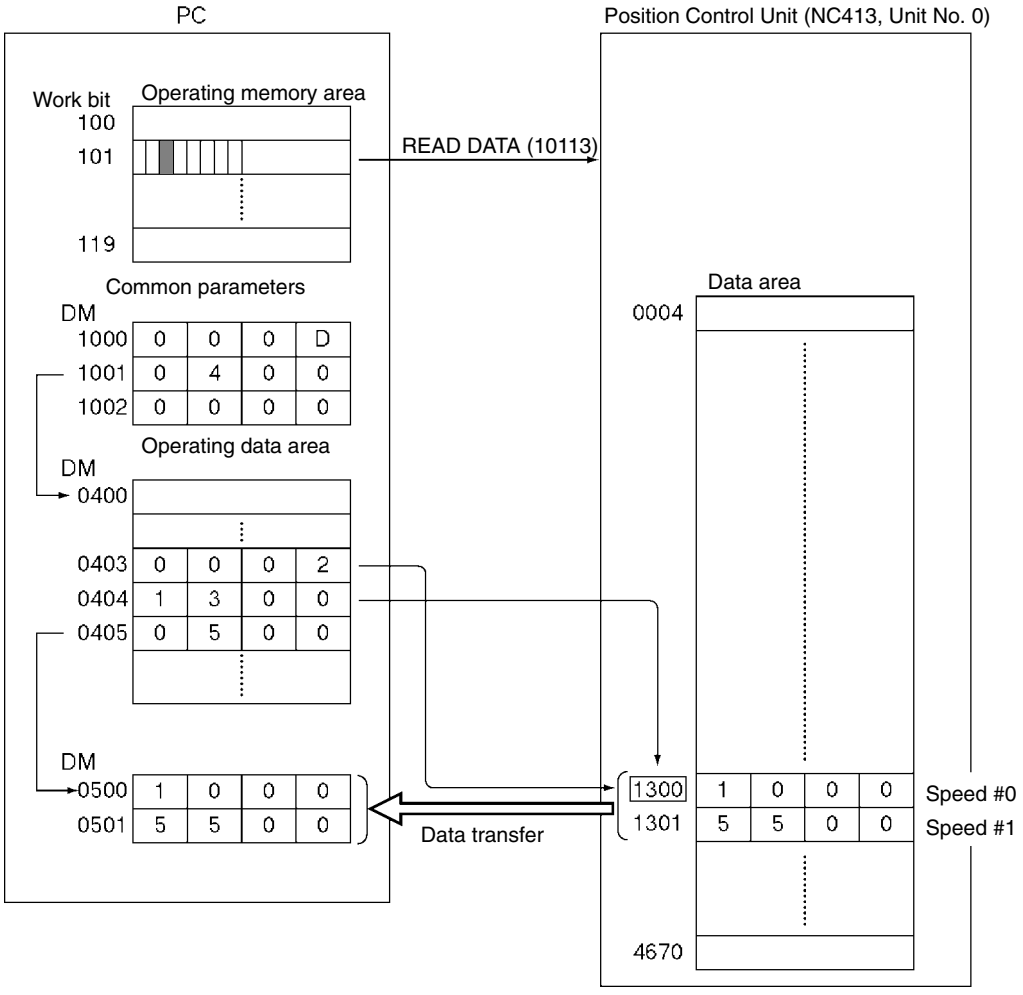

Example of Program The work bit 23500 is used to begin reading.

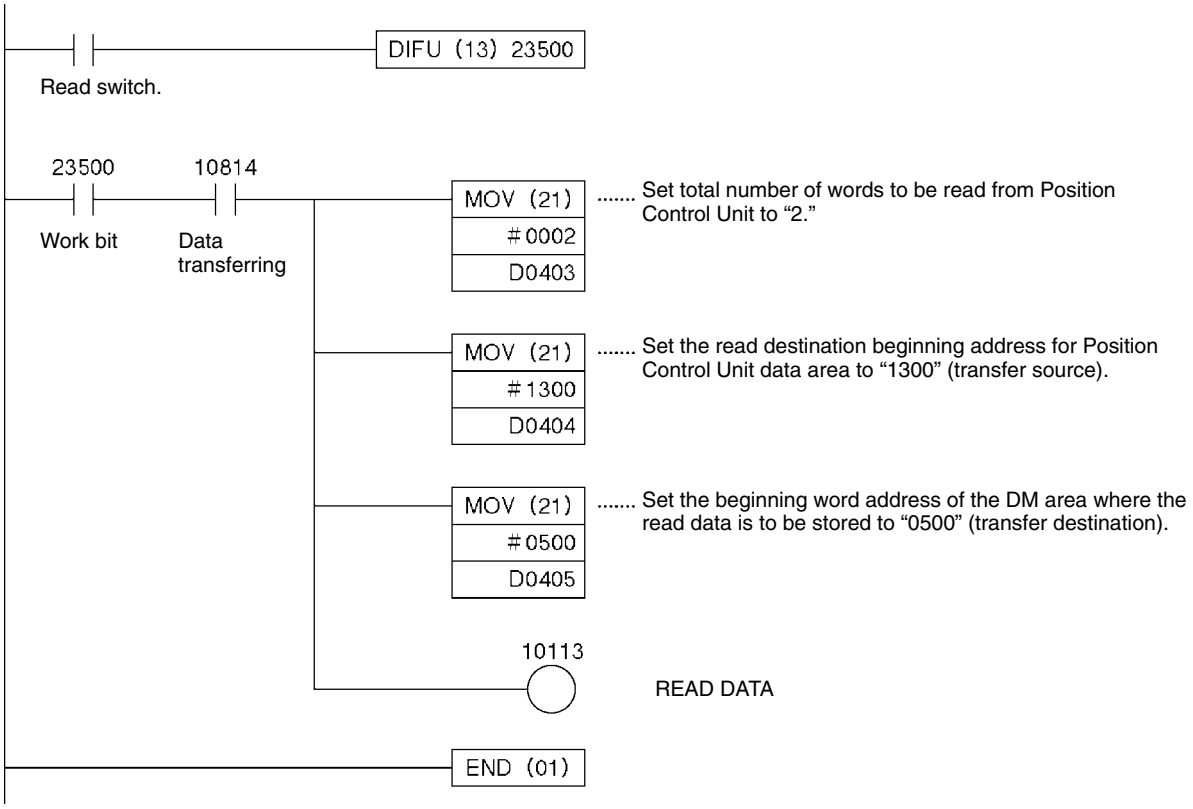

Contents of DM after read is completed.

DM0500	1	0	0	0	- - - - Speed #0
DM0501	5	5	0	0	- - - - Speed #1

5-4 Writing Data with IOWR

With a C200HX/HG/HE-series PC, the Intelligent I/O Write instruction (IOWR) can be used to write data.

5-4-1 Outline

The following diagram outlines the way in which positioning sequences are written to the Position Control Unit. With IOWR, 128 words of data in consecutive addresses can be transferred at one time.

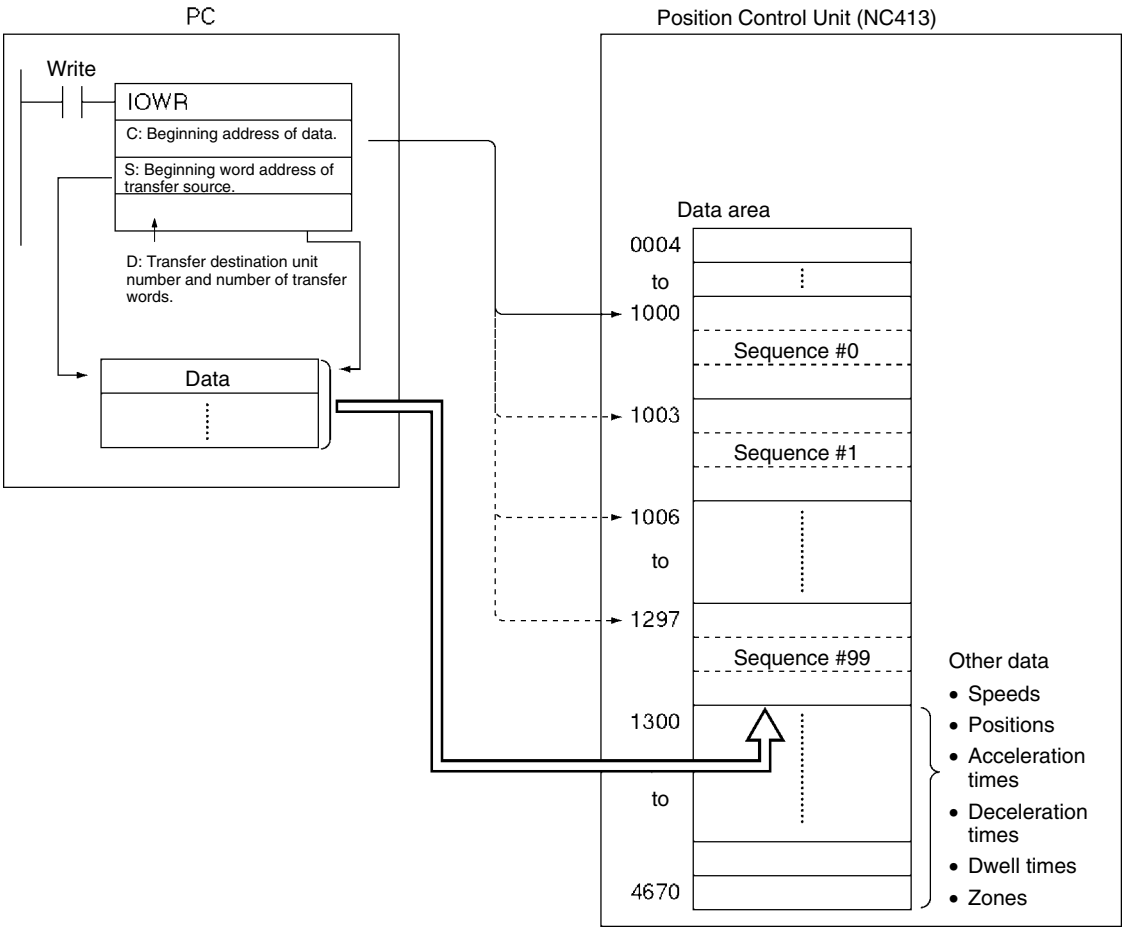

The Position Control Unit for which IOWR is used to write data must be mounted on the Programmable Controller's CPU Rack or an Expansion I/O Rack.

Data Writing Procedure

Refer to *5-4-2 Instruction Specifications* and the Programmable Controller's operation manual for details on how to set the operand for the IOWR instruction.

1, 2, 3...

1. Setting IOWR
   C: Beginning address of the data area in the Position Control Unit where the data is to be stored.
   S: Beginning word address of the area in the PC on which the data has been set.
   D: Unit number of the Position Control Unit which is the transfer destination, and the total number of words to be read.
2. Setting the data
   Set the data in the area designated by S.
3. Writing the data
   Execute IOWR.

5-4-2 Instruction Specifications

The following describes the format of IOWR instructions.

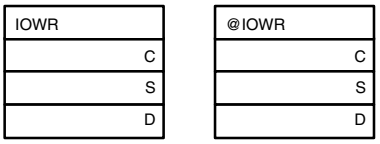

Operand	Explanation
C	15 … 00 Beginning address of data. Set the beginning address of the data area in the Position Control Unit where the data is to be stored.
S	Source address. Set the beginning word address of the area in the PC on which the data has been set.
D	15 12 11 … 00 Number of transfer words. Destination unit number. Set the unit number of the Position Control Unit to which the data is to be transferred (the transfer destination unit number) and the total number of words to be written (the number of transfer words). The number of transfer words can be set anywhere in the range from 1 to 128.

5-4-3 Flags Used

When data is transferred using IOWR, it will be possible to use the ER Flag (25503) and the Equals Flag (25506) to check whether the transfer has been completed successfully. If the Error Flag (word n+8, bit 12) is ON, an error code will be output to I+27 in the operating data area. Check this error code to determine the cause of the error and correct it.

Flag	ON Condition	OFF Condition
ER (25503)	• Number of transfer words is not BCD. • Number of transfer words is 0 or 129 and above • When DM was set, the contents of DM was not 6656 and above, or BCD. • The transfer destination unit number is outside the permissible range. • The unit number for the transfer destination unit is for a Remote I/O Slave Unit.	Anything else.
= (25506)	The transfer has been completed without error.	Anything else.

5-4-4 Precautions when Using IOWR

IOWR is an improvised instruction which transfers all data with a single instruction. It increases the transfer time for the data as well as the cycle time for the ladder program. The monitoring time for the cycle time should be adjusted as required.

The transfer time is influenced by such factors as the model of the Programmable Controller being used, the ladder program, and the status of the Position Control Unit, and cannot be calculated easily. Refer to *Appendix A Data Calculation Standards* to transfer positioning sequences using a C200HX and a C200HW-NC413. It can be used as a model for setting cycle time monitoring time.

Using IOWR, a maximum of 128 words of data in consecutive addresses can be transferred at one time.

When using IOWR, be sure to transfer data in complete units, and do not start or end transfer in the middle of data. For example, with X-axis sequence #0, the data unit becomes three words consisting of addresses from 1000 to 1002. If the transfer is started or ended part-way through, ER Flag 25503 will be turned ON. When transferring the origin search high speed and origin search proximity speed settings, be sure to transfer both settings together. It is not possible to transfer only one of these settings.

Note Depending on the execution timing of the IOWR instruction, it is possible that errors generated as a result of data check at the time of transfer may not be reflected at the CPU Unit. (Refer to *5-1 Transferring and Saving Data*.)

5-4-5 IOWR Program Example

A sample program is provided below for writing the indicated speed data to the Position Control Unit. The beginning word address of the transfer data is to be DM 0500, and the other settings are as indicated. The data will be transferred to the Position Control Unit designated as Unit No. 2.

Data	Address (transfer destination)	DM (transfer source)	Setting
Speed #0	1300	0500	1000
Speed #1	1301	0501	5500

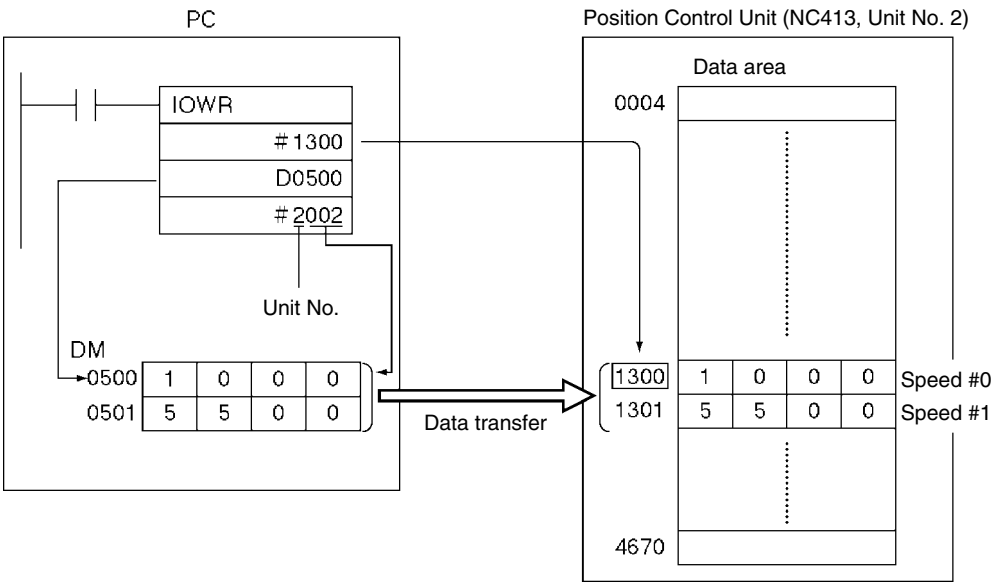

Example of Program

Work bit 23500 is used to start writing. When debugging, it is a good idea to create a ladder program that refers to the ER Flag and Error Flag (word n+8, bit12).

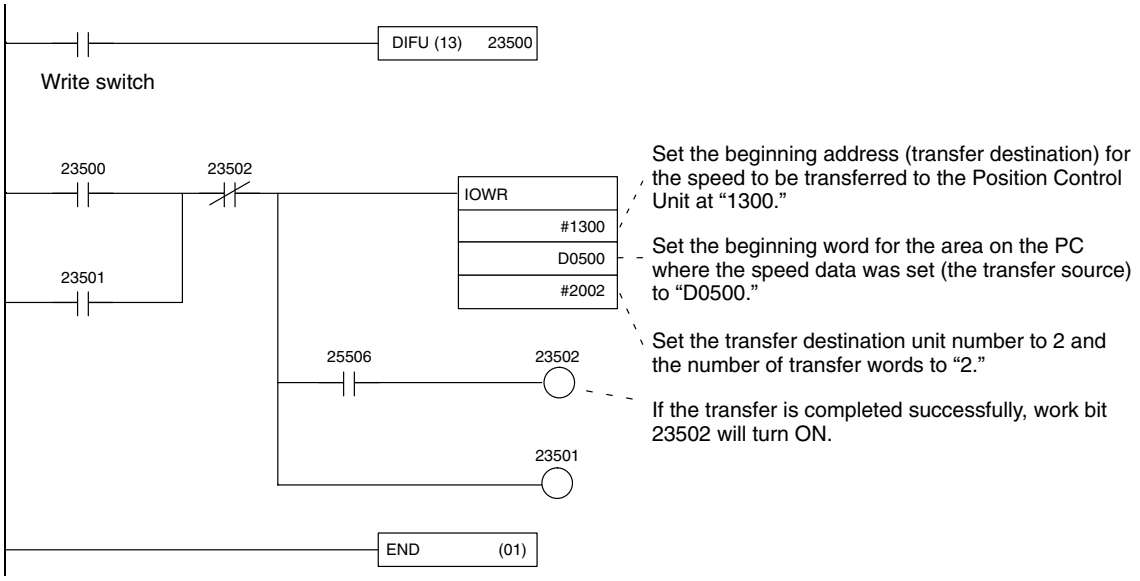

5-5 Reading Data with IORD

With a C200HX/HG/HE-series PC, the Intelligent I/O Read instruction (IORD) can be used for reading data.

5-5-1 Outline

This section outlines how to read positioning sequences from a Position Control Unit. Using IORD, 128 words of data in consecutive addresses can be read at one time. Refer to *5-4 Writing Data with IOWR* for an outline.

The Position Control Unit executing READ DATA using IORD must be mounted on the Programmable Controller's CPU Rack or an Expansion I/O Rack.

5-5-2 READ DATA Procedure

Refer to *5-5-3 Instruction Specifications* and the Programmable Controller's operation manual for details on how to set the operand for IORD.

1, 2, 3...

1. Setting IORD
   C: Beginning address of the Position Control Unit data area.
   S: Unit number of the Position Control Unit reading the data and the total number of words to be read.
   D: Beginning word address of the area in the Programmable Controller where the read data will be stored.
2. Executing READ DATA
   Execute IORD.

5-5-3 Instruction Specifications

The following describes the format of IORD instructions.

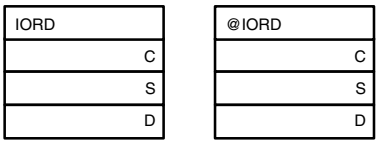

Operand	Explanation
C	15 … 00 Beginning address of data. Set the beginning address for the Position Control Unit data area where the data will be read.
S	15 12 11 … 00 Number of transfer words. Destination unit number. Set the unit number of the Position Control Unit reading the data and the total number of words to be read (the number of transfer words). The number of transfer words can be set anywhere from 1 to 128.
D	Destination address Set the beginning word address for the area in the Programmable Controller which will store the data.

5-5-4 Flags Used

When data is transferred using IORD, it will be possible to use the ER Flag (25503) and the Equals Flag (25506) to check whether the transfer has been completed successfully. If the Error Flag (word n+8, bit 12) is ON, an error code will be output to I+27 in the operating data area. Check this error code to determine the cause of the error and correct it.

Flag	ON Condition	OFF Condition
ER (25503)	• Number of transfer words is not BCD. • Number of transfer words is 0 or 129 and above • When DM was set, the contents of DM was not 6656 and above, or BCD. • The transfer source unit number is outside the permissible range. • The unit number for the transfer source unit is for a Remote I/O Slave Unit.	Anything else.
= (25506)	The transfer has been completed without error.	Anything else.

5-5-5 Precautions when Using IORD

IORD is an improvised instruction which transfers all data with a single instruction. It increases the transfer time for the data as well as the cycle time for the ladder program. The monitoring time for the cycle time should be adjusted as required.

The transfer time is influenced by such factors as the model of the Programmable Controller being used, the ladder program, and the status of the Position Control Unit, and cannot be calculated easily. Refer to *Appendix A Data Calculation Standards* to transfer positioning sequences using a C200HX and a C200HW-NC413. It can be used as a model for setting cycle time monitoring time.

Using IORD, a maximum of 128 words of data in consecutive addresses can be transferred at one time.

When using IORD, be sure to transfer data in complete units, and do not start or end transfer in the middle of data. For example, with X axis sequence #0, the data unit becomes three words consisting of addresses from 1000 to 1002. If the transfer is started or ended part-way through, the ER Flag (25503) will be turned ON.

5-5-6 IORD Program Example

In this example, speeds #0 and #1 written in *5-4 Writing Data with IOWR* are read. The conditions to be set are the same as those used in the example of writing the data. The beginning word for the DM area where the read data is to be stored is set at DM 0500.

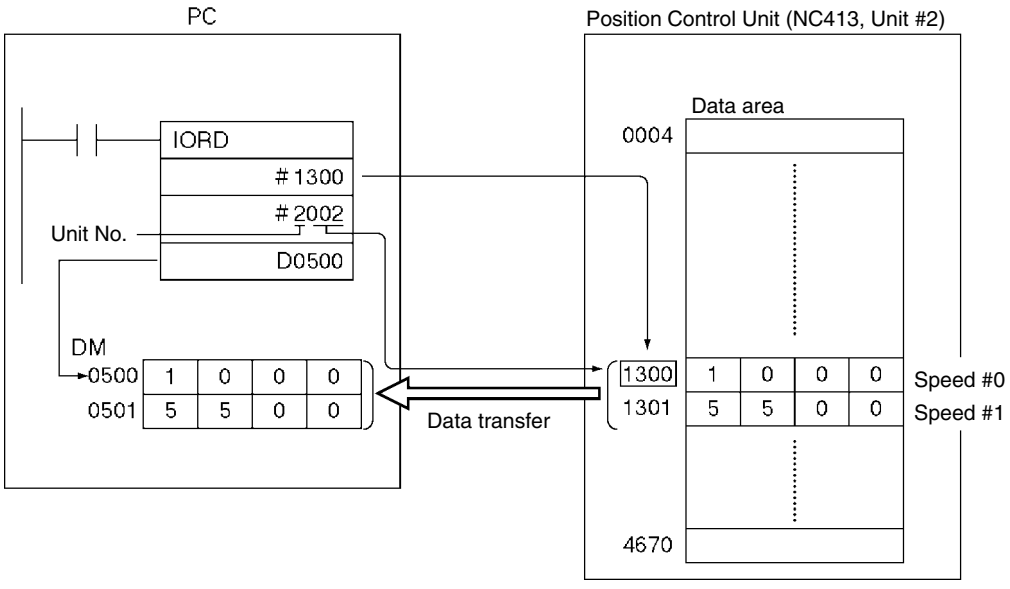

Note Depending on the execution timing of the IORD instruction, it is possible that errors generated as a result of data check at the time of transfer may not be reflected at the CPU Unit. (Refer to *5-1 Transferring and Saving Data*.)

Program Example

The work bit 23500 is used to begin reading. When debugging, it is a good idea to create a ladder program that refers to the ER Flag and Error Flag (word n+8, bit12).

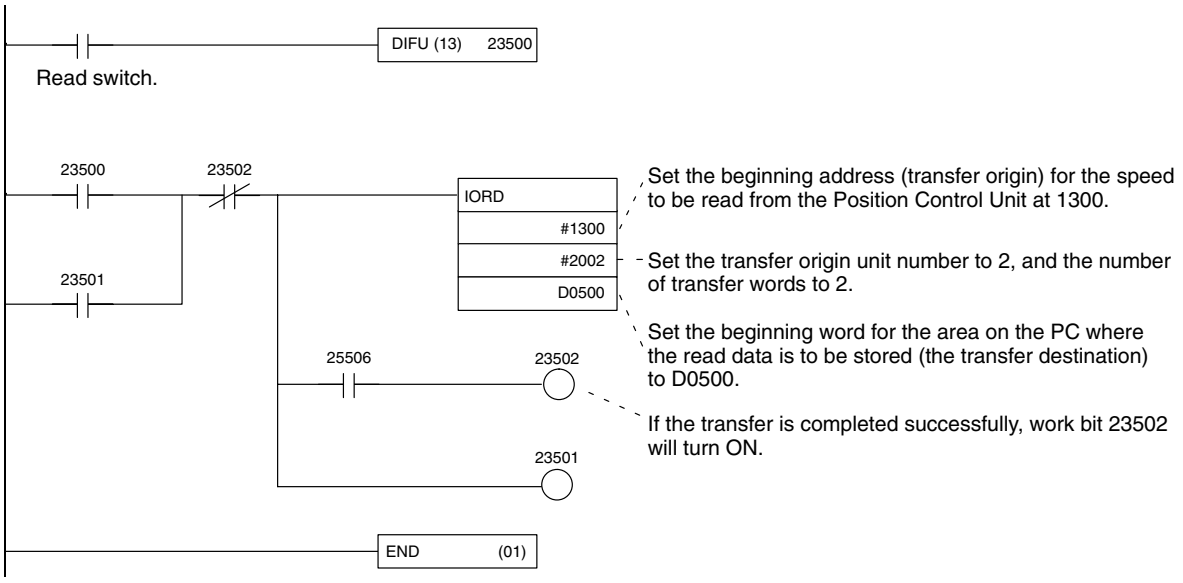

Contents of DM after read is completed.

DM0500	1	0	0	0	- - - - Speed #0
DM0501	5	5	0	0	- - - - Speed #1

5-6 Creating and Transferring Data with the Support Tool

If this Unit is installed on a C200HX/HG/HE-series PC, it will be possible to use the SYSMAC-NCT Support Tool to read, write and save data, and to monitor the operating status of the Position Control Unit.

Outline

The SYSMAC-NCT Support Tool is software that runs under Windows 95 and can be used for setting all kinds of data used by a Position Control Unit as well as for monitoring the operating status of the Position Control Unit.

Creating and Transferring Data

Refer to the *SYSMAC-NCT Support Tool Operation Manual* for details on its operation.

Note Do not carry out multiple transfers from SYSMAC-NCT Support Tool to the same Position Control Unit at the same time. There is a probability of the data transfer not being completed successfully, and of abnormal operation resulting.

Be sure that the Position Control Unit which is using SYSMAC-NCT Support Tool to carry out data transfer and storage, and monitor the status of operations, is mounted on the PC's CPU Rack or an Expansion I/O Rack. Access is not available to a Position Control Unit mounted to a Slave.

Note When setting the sequence data using the SYSMAC-NCT Support Tool, more than one axis designation cannot be made for one sequence data number. If more than one axis designation is made for one sequence data number, an Axis Designation Error will occur.
For example, an Axis Designation Error will occur in the following cases;
Axis designation of "XY" for the X-axis sequence data No. 100
Axis designation of "Y" for the Y-axis sequence data No. 100.

5-7 Saving Data

Data transferred to the Position Control Unit will be erased either when the power to the Programmable Controller is turned off or when the Unit is restarted. To preserve the data that has been transferred, it must be saved in the Position Control Unit's flash memory. Once it has been saved, it can be read out and used the next time the power to the Unit is turned on or restarted. When the data is saved, all data including parameters existing at that point in time are saved.

Note

1. Do not turn off the power or restart the Unit while data is being saved. It may cause a failure in the Position Control Unit's internal flash memory, or cause the Unit to operate abnormally.
2. If a failure does occur in the flash memory, a flash memory error (error code 9300) will be generated when data is saved. Saving data can take as long as 30 seconds.
3. Only save data when all axes are stopped and no other commands are being executed. Otherwise the data will not be saved, and a multiple start error (error code 8000) will result.

5-7-1 Flash Memory

The contents of the PCU's internal memory are lost when the power supply is turned off or when the PCU is restarted. By saving the contents of the internal memory to the flash memory, parameters and other data can be retained.

The following types of data can be saved in the flash memory:

- Axis parameters
- Positioning sequences
- Speeds
- Acceleration and deceleration times
- Dwell times
- Zones

Note The data for the number of axes for the particular Position Control Unit being used is all saved at once.

Parameters and other data that have been saved to flash memory are read to the PCU's internal memory when the PCU is powered up or restarted. If the parameters or other data are corrupted at that time, a parameter destruction error (error code 0001) or data destruction error (error code 0002) will be generated and the PCU will be started up using the initial values (i.e., the factory settings) or the parameters and data that had been saved prior to the last save to flash memory.

If parameters or data are lost, no operation other than data transfer or data saved can be received. After transferring the data, save the data and turn the power off and then on again, or restart the Unit.

5-7-2 Procedure for Saving Data

Use either the SAVE DATA Bit in the operating memory area (word n+1, bit 14) or use the NC Support Tool.

Using SAVE DATA

Turning the SAVE DATA Bit (word n+1, bit 14) from OFF to ON will write the data to the flash memory.

Name	Operating Data Area: X Axis	Bit	Details
SAVE DATA	n+1	14	↑ : Begin SAVE DATA

Refer to the *SYSMAC-NCT Support Tool Operation Manual* for information on using SYSMAC-NCT Support Tool.

5-7-3 Timing Chart for Saving Data

Data cannot be saved and transferred at the same time. Attempting to do so will result in a multiple start error (error code 8000). It is also not possible to save data while pulses are being output. The following diagram is a timing chart for saving data.

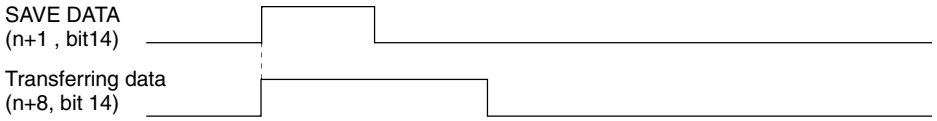

When the data saving operation has been completed, the Transferring Data Bit (word n+8, bit14) is turned from ON to OFF.

SECTION 6
Defining the Origin

This section explains the origin search and origin return operations. With memory operation, if positions are designated by absolute values, or if the ABSOLUTE MOVEMENT command is executed by direct operation, it will be essential to execute an origin search and establish the origin before positioning.

Origin return is used to return the axis to the origin from any given location. Any location can be made the origin by using the RESET PRESENT POSITION command to change the present position to 0. Refer to *9-6 Changing the Present Position* for information on resetting the present position.

6-1 Setting the Data for an Origin Search 118
6-2 Executing Origin Search 119
6-2-1 Origin Search Operation 119
6-2-2 Operation Patterns According to Origin Detection Methods 120
6-2-3 Operation Patterns According to Operation Modes 124
6-2-4 Operation Pattern With Origin Compensation 129
6-3 Origin Search Timing Charts 130
6-3-1 Without Origin Compensation 130
6-3-2 With Origin Compensation 131
6-3-3 Origin Search Deceleration Stop 132
6-3-4 Emergency Stop of Origin Search 133
6-4 Origin Return 134
6-4-1 Allocation of Operating Memory Area and Setting of Operating Data Area 134
6-4-2 Timing Chart 135

6-1 Setting the Data for an Origin Search

This section provides a simple description of the axis parameters and operating memory area used when executing an origin search. For more details, and for how to make the settings, refer to *4-3 Axis Parameters Area* and *4-4 Operating Memory Area*.

Axis Parameters

Name	Parameter areas for each axis				Bit	Details
	NC113	NC213	NC413			
	X axis	Y axis	Z axis	U axis		
I/O setting	m+4	m+28	m+52	m+76	04 to 06	08 03 Limit input signal type 0: N.C. input, 1: N.O. input Origin proximity input signal type 0: N.C. input, 1: N.O. input Origin input signal type 0: N.C. input, 1: N.O. input
Operation mode Origin search operation Origin detection method Origin search direction	m+5	m+29	m+53	m+77	00 to 03 04 to 07 08 to 11 12 to 15	15 00 Operation Mode 0 to 3: Modes 0 to 3 Origin search operation 0: Reversal mode 1 1: Reversal mode 2 2: Single-direction mode Origin detection method 0: With origin proximity input signal reversal 1: Without origin proximity input signal reversal 2: Origin proximity input signal not used 3: Limit input signal used instead of origin proximity input signal Origin search direction: 0: CW; 1: CCW.
Initial speed	m+7	m+31	m+55	m+79	00 to 15	15 14 13 12 00 x10^2 x10^1 x10^0 (Units: pps) x10^3 Factor: 00: x 1, 01: x 10, 10: x 100, 11: x1,000
Origin search high speed	m+8	m+32	m+57	m+81	00 to 15	
Origin search proximity speed	n+9	m+33	m+57	m+81	00 to 15	
Origin compensation	m+10 m+11	m+34 m+35	m+58 m+59	m+82 m+83	00 to 15	15 Leftmost 00 15 Rightmost 00 x10^6 x10^5 x10^4 x10^3 x10^2 x10^1 x10^0 Sign: 0: Pos. (CW), 1: Neg. (CCW)
Acceleration time	m+15 m+16	m+39 m+40	m+63 m+64	m+87 m+88	00 to 15	15 Leftmost 00 15 Rightmost 00 0 0 x10^5 x10^4 x10^3 x10^2 x10^1 x10^0 Set range: 0 to 250,000 (ms)
Deceleration time	m+17 m+18	m+41 m+42	m+65 m+66	m+89 m+90	00 to 15	

Note 1. Set the low-speed origin search at 10 kpps or below.
(Origin input signal type: N.O. input: 10 kpps max.; N.C. input: 1 kpps max.)
If a higher value is set, it may not be possible to stop at the origin accurately.

2. When setting the origin search high speed and origin search proximity speed settings using the IOWR instruction, be sure to make both settings together. It is not possible to make only one of these settings.

Operating Memory Area Allocation

The origin search is started when the ORIGIN SEARCH Bit is turned ON.

Name	Model	Operating memory area				Bit	Details
		NC113	NC213	NC413			
		X axis	Y axis	Z axis	U axis		
ORIGIN SEARCH	NC413	n	n+2	n+4	n+6	06	↑ : ORIGIN SEARCH start
	NC213	n	n+2				
	NC113	n					
No Origin Flag	NC413	n+8	n+11	n+14	n+17	06	1: No origin, 0: Origin
Origin Stop Flag	NC213	n+4	n+7			07	1: Stopped at origin, 0: Other
Position Completed Flag	NC113	n+2				05	↑ : Positioning completed
Busy Flag						13	1: Busy

6-2 Executing Origin Search

This section provides information about the ORIGIN SEARCH command and the operation patterns for origin searches using the various settings.

6-2-1 Origin Search Operation

The operation varies as follows according to whether or not an origin proximity input signal is used.

With an Origin Proximity Input Signal

There is no deceleration when stopping from the origin search proximity speed with the origin input signal.

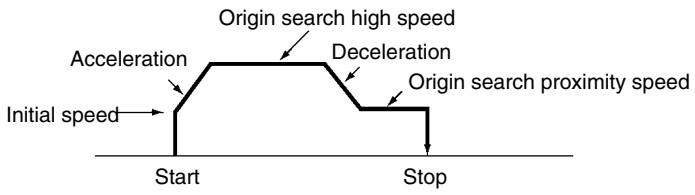

Without an Origin Proximity Input Signal

The origin search is conducted at low speed. There is no deceleration when stopping with the origin input signal.

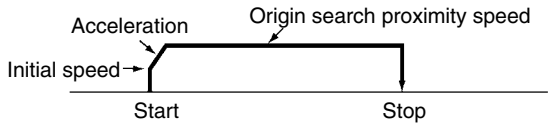

If the origin search proximity speed is less than or equal to the initial speed, there will be no acceleration.

6-2-2 Operation Patterns According to Origin Detection Methods

This section provides information about how operation patterns vary according to origin detection methods and the settings in the origin search operation. For the purposes of this explanation, the origin search is conducted in the CW direction. If origin search is conducted in the CCW direction, the search direction and limit input directions will be reversed.

Origin detection method	Origin search operation 0: Reversal mode 1
0: Takes origin signal after origin proximity signal turns ON (↑) and OFF (↓).	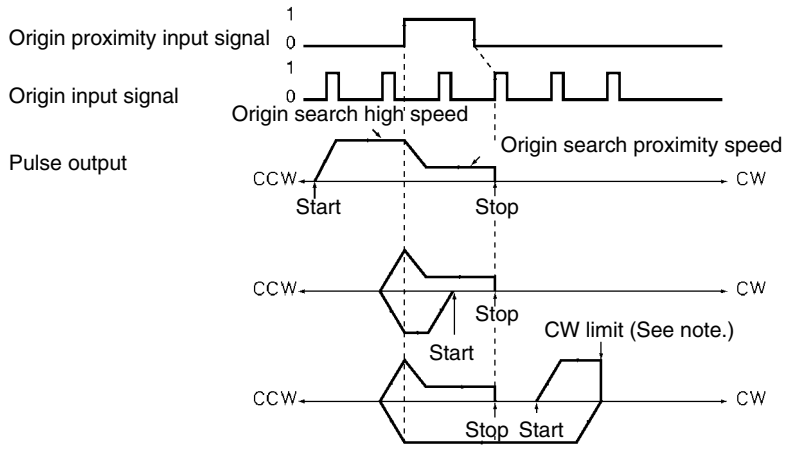 **Note** If a reversal is initiated by a limit signal, a stop without deceleration will occur, and acceleration will occur after reversing.
1: Takes origin signal after origin proximity signal turns ON (↑).	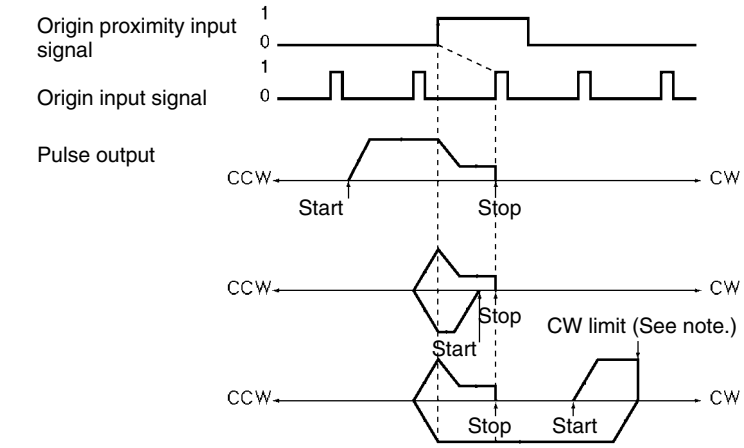 **Note** If a reversal is initiated by a limit signal, a stop without deceleration will occur, and acceleration will occur after reversing.

Origin detection method	Origin search operation 0: Reversal mode 1
2: Origin proximity input signal not used	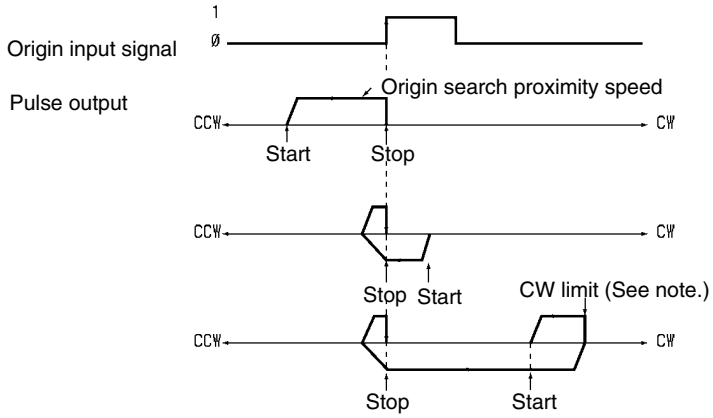 **Note** If the direction of operation is reversed, the reverse will be sudden, without deceleration or acceleration.
3: Limit input signal used instead of origin proximity input signal	An origin detection method error (error code 1607) is generated and settings are not possible.

Origin detection method	Origin search operation 1: Reversal mode 2
0: Takes origin signal after origin proximity signal turns ON (↑) and OFF (↓).	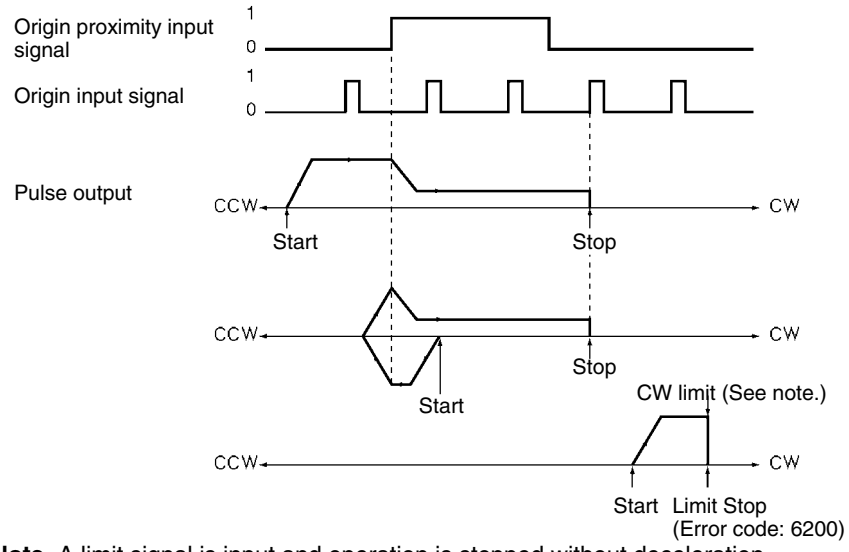 **Note** A limit signal is input and operation is stopped without deceleration.

Origin detection method	Origin search operation 1: Reversal mode 2
1: Takes origin signal after origin proximity signal turns ON (↑).	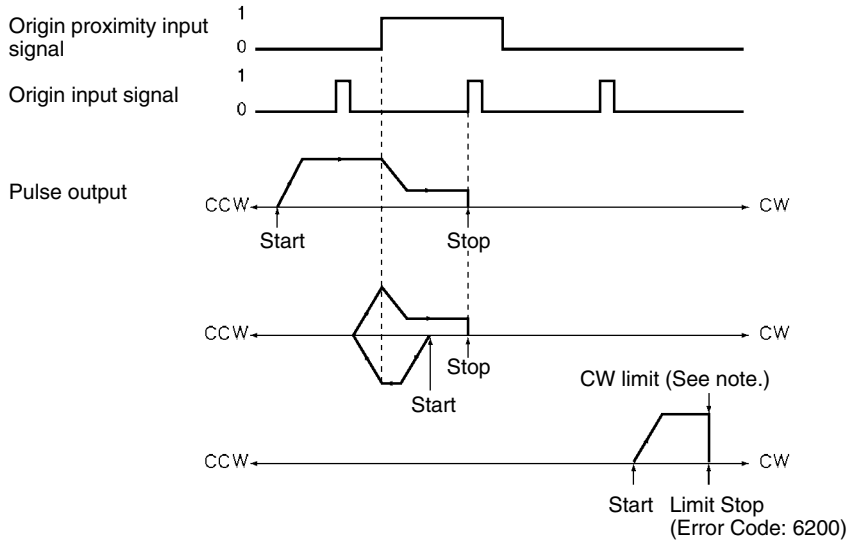 **Note** A limit signal is input and operation is stopped without deceleration.
2: Origin proximity input signal not used	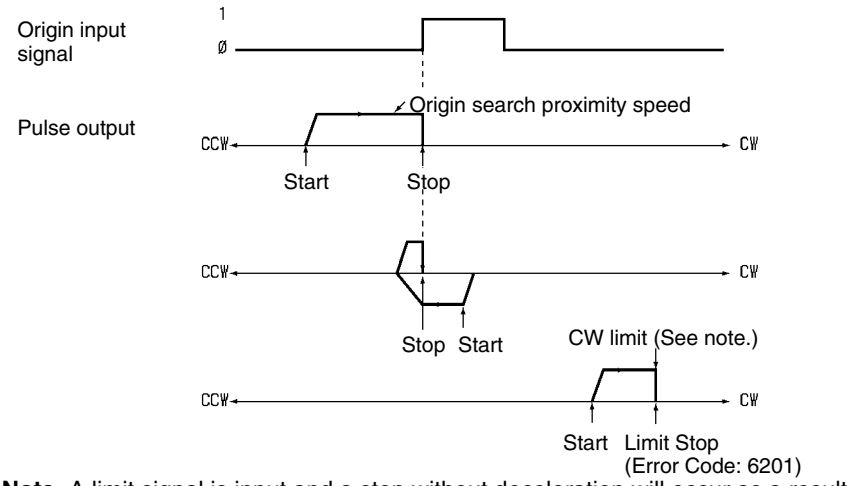 **Note** A limit signal is input and a stop without deceleration will occur as a result.
3: Limit input signal used instead of origin proximity input signal	An origin detection method error (error code 1607) is generated and settings are not possible.

Origin detection method	Origin search operation 2: Single direction mode
0: Takes origin signal after origin proximity signal turns ON (↑) and OFF (↓).	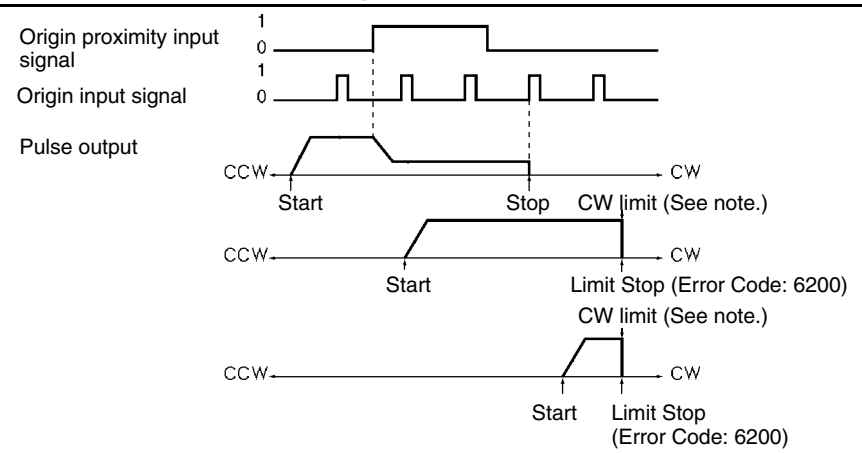 **Note** A limit signal is input and operation is stopped without deceleration.

Origin detection method	Origin search operation 2: Single direction mode
1: Takes origin signal after origin proximity signal turns ON (↑).	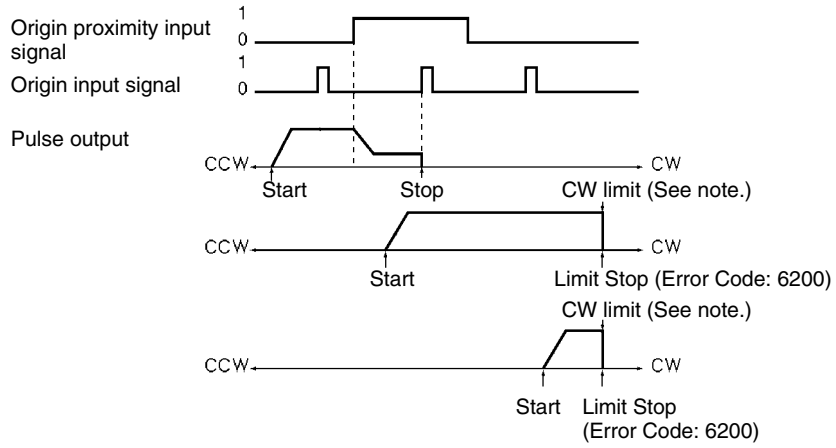 **Note** A limit signal is input and operation is stopped without deceleration.
2: Origin proximity input signal not used	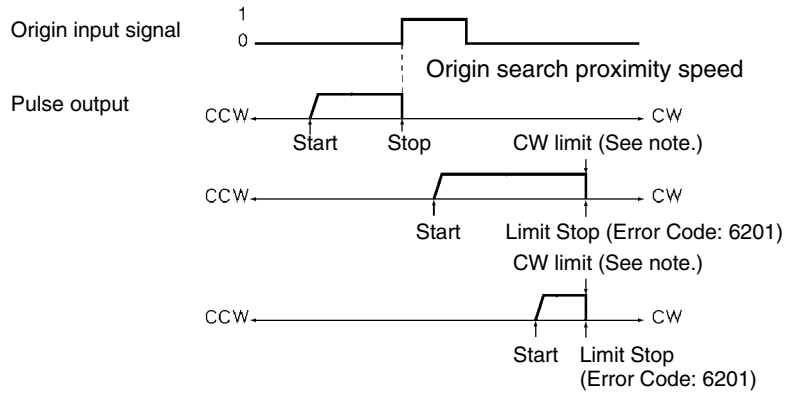 **Note** A limit signal is input and operation is stopped without deceleration.
3: Limit input signal used instead of origin proximity input signal	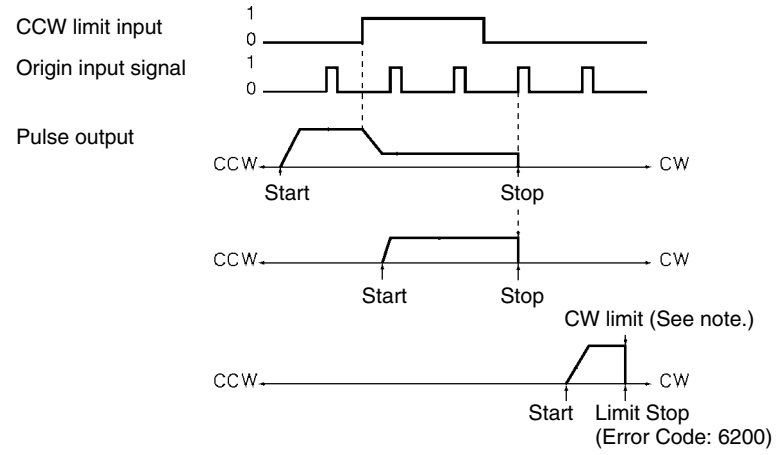 **Note** A limit signal is input and operation is stopped without deceleration.

6-2-3 Operation Patterns According to Operation Modes

Mode 0

An open collector output signal such as a sensor is connected to the origin input signal (A14, A15/B14, B15), and the origin input signal response time is 0.1 ms. (N.O. contact setting)

In this mode, an origin input signal error (error code 6202) will be generated if an origin input signal is input during the deceleration from origin search high speed to origin search proximity speed which is initiated by the input of an origin proximity input signal (or a limit input signal if the origin detection method is set to 3).

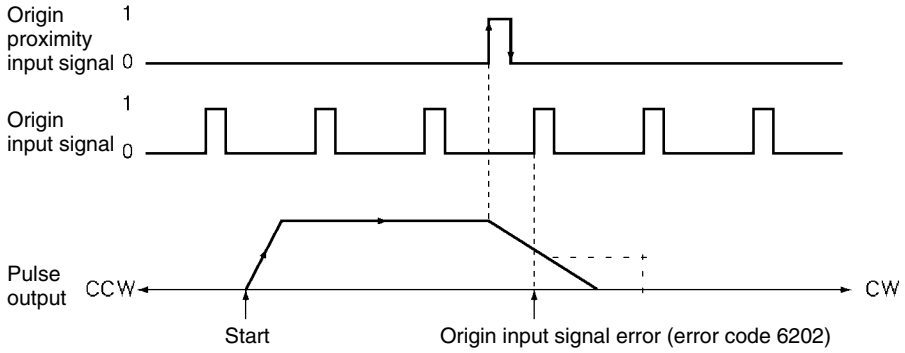

Mode 1

The Z-phase signal from the servodriver is connected to an origin input signal (A14, A15 [A16]/B14, B15 [B16]). An origin input signal is input and, within an interval of approximately 20 ms after the stop, a error counter reset signal is output.

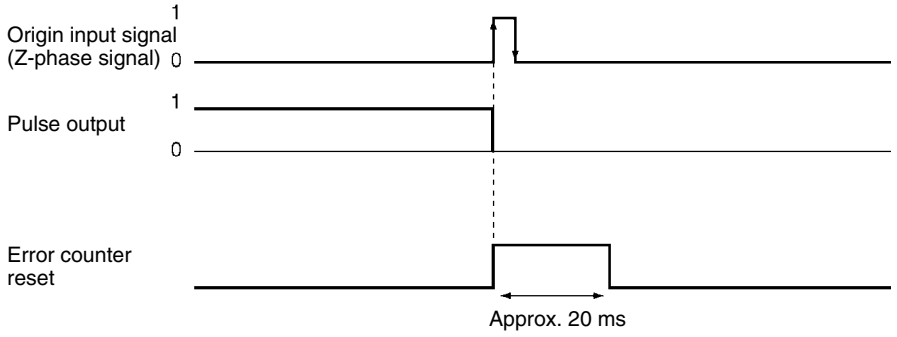

In this mode, if an origin input signal is input during the deceleration from origin search high speed to origin search proximity speed which is initiated by the input of an origin proximity input signal, positioning will be stopped by the first origin input signal after the deceleration has been completed.

Origin Detection Method: 0

When the deceleration time is short, such as in cases where positioning begins from within the origin proximity area, an origin input signal will be detected immediately after the falling edge of the origin proximity input signal. Be sure that the origin proximity input signal dog is long enough (i.e., more than the deceleration time).

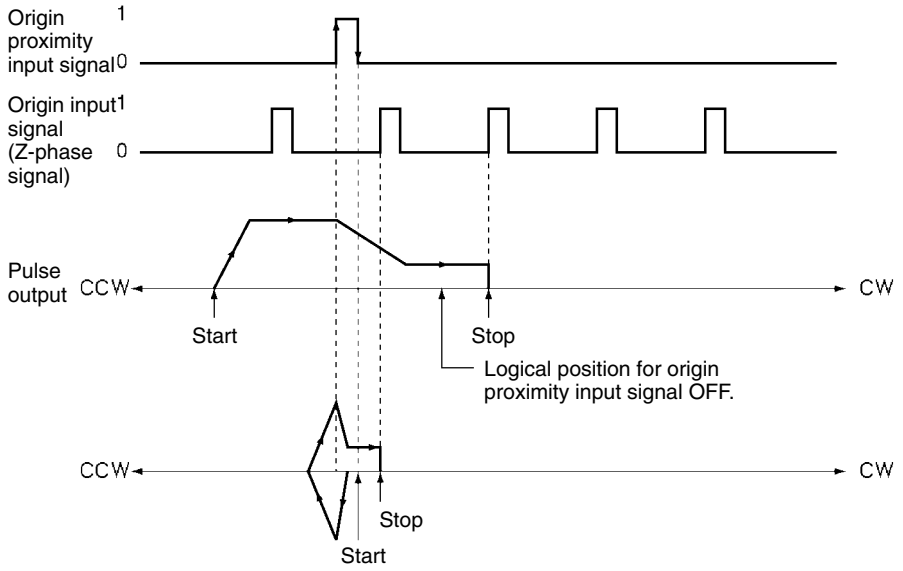

Origin Detection Method: 1

If an origin proximity input signal is input during deceleration, the stop position will vary according to the length of the deceleration time.

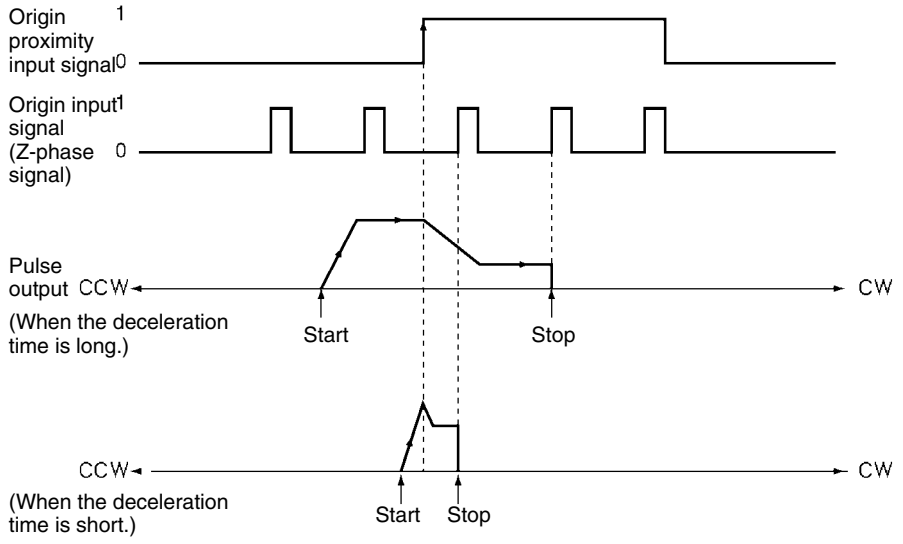

Mode 2

This mode is similar to Mode 1, except that the positioning completed input signal (INP) is also used. The positioning completed input signal from the servomotor driver is connected to the positioning completed input (A12/B12) of the Position Control Unit's external I/O connector.

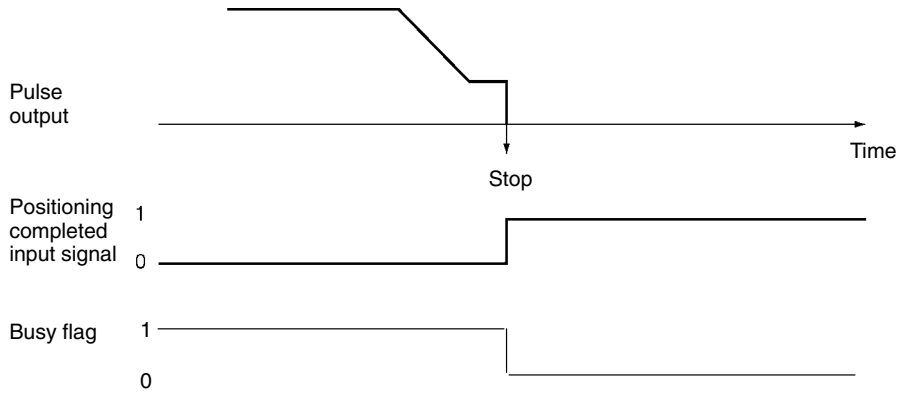

Mode 3

This mode makes use of the origin adjustment function of OMRON Servomotor Drivers such as the R88D-H/M. It also uses the Servomotor Driver's positioning completed input signal (INP) as the origin search completed signal. Do not use a Z-phase, or error counter reset signal.

Origin Detection Method: 0

Deceleration starts on the rising edge of the origin proximity input signal and the origin adjustment command is output on the falling edge. Positioning stops on the rising edge of the positioning completed input signal from the Servomotor Driver.

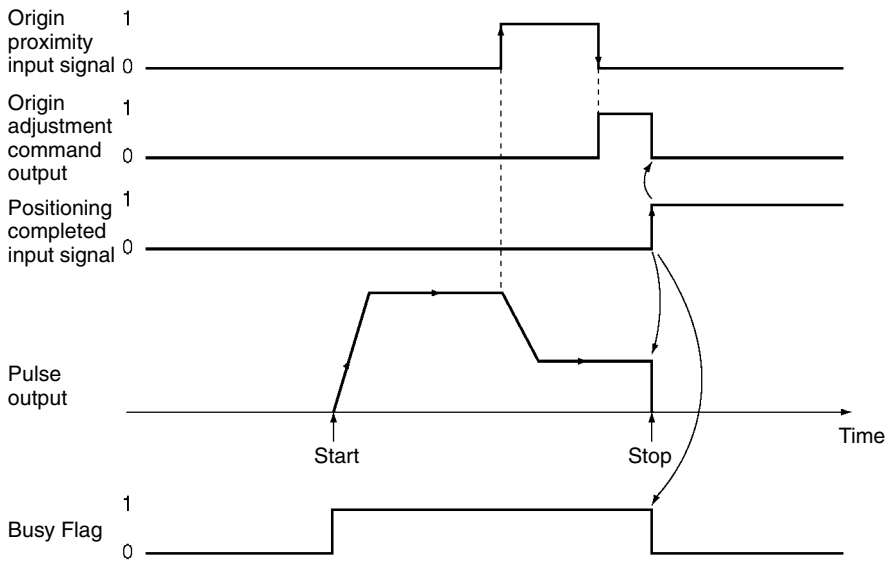

Note When the origin search is completed in Mode 2 or Mode 3, the Servomotor Driver's positioning completed input signal is used. The positioning completed input signal waits for the positioning monitor time (axis parameter). If the monitor time is set to "0," the signal waits until the positioning completed input signal turns ON. Therefore, if a problem exists in the positioning completed input signal wiring or if the servo gain is set to a large value, busy state continues without completing the positioning.

When the origin adjustment command (H-RET) is received by the Servomotor Driver, the internal error counter is reset by the Z-phase of the encoder and positioning stops.

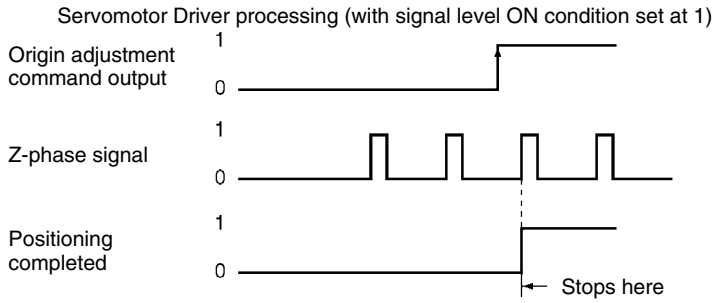

The stop position is the same in Mode 1 and Mode 2. For an operation where the start location of the origin search is different or where the deceleration time is short, refer to the previously-described *Mode 1*. In Mode 3, if deceleration is not completed when the origin proximity input signal is turned ON and then turned OFF, an origin adjustment signal will be output after deceleration is completed.

Origin Detection Method: 1

Deceleration starts on the rising edge of the origin proximity input signal, and an origin adjustment command is output when deceleration is completed.

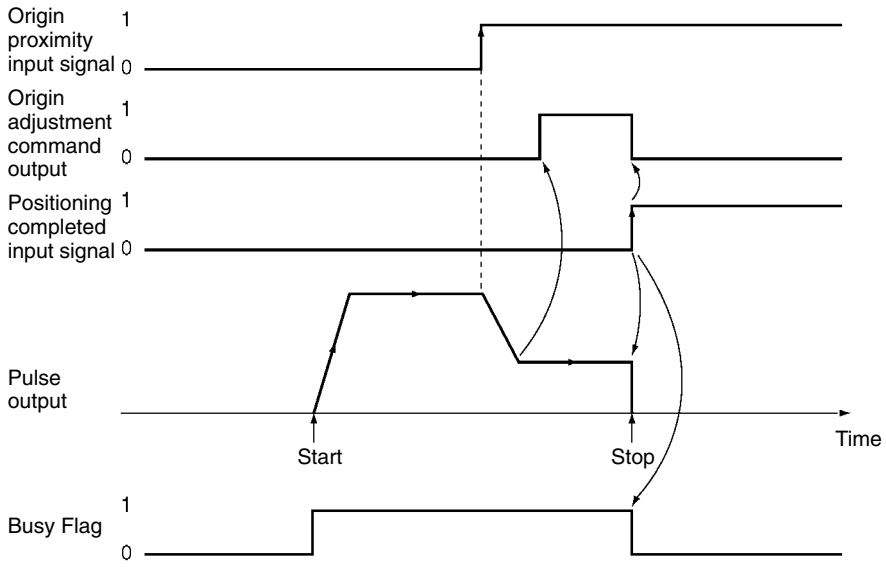

If there is a Z-phase signal during deceleration, the stop position will vary according to the deceleration time.

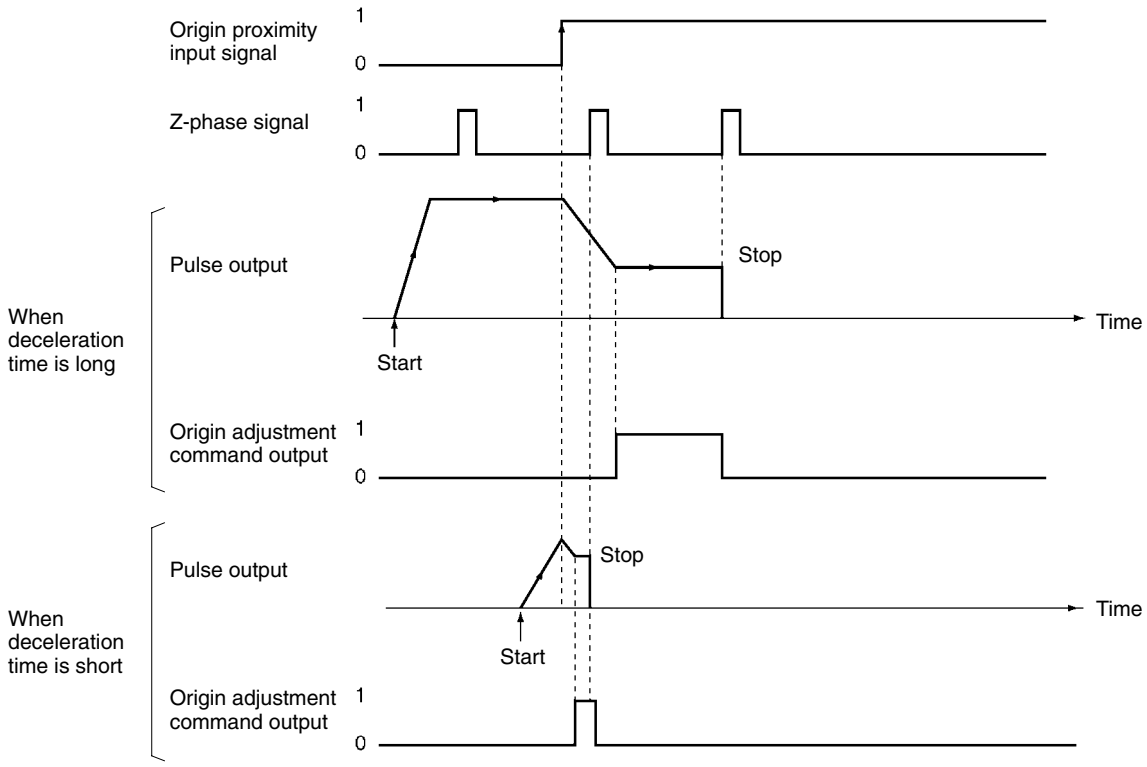

Origin Detection Method: 3

Deceleration starts on the rising edge of the limit input signal. After the signal turns OFF, an origin adjustment command output turns ON. If the deceleration is insufficient while the limit input signal is ON, there will be an error.

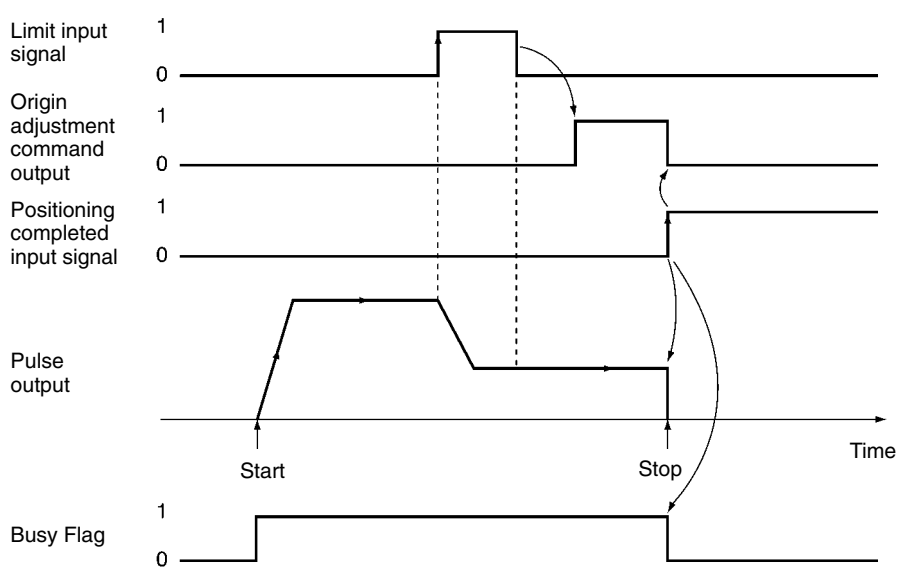

6-2-4 Operation Pattern With Origin Compensation

An origin compensation value can be set so that the axis is moved by that amount after the origin input signal is detected. That origin compensation movement will be executed at the origin search proximity speed.

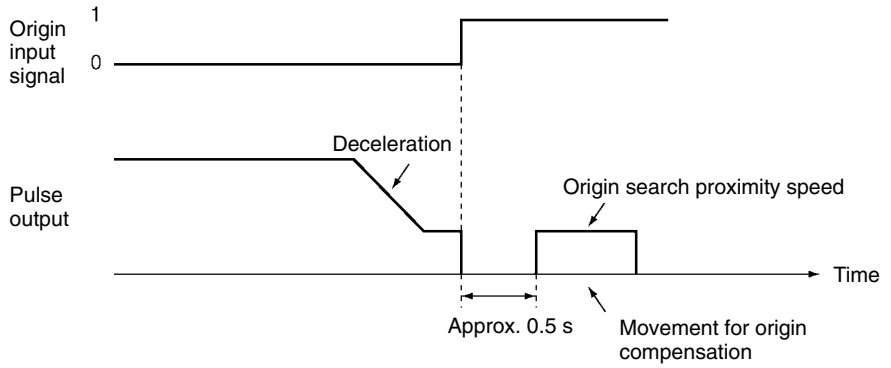

Note If the speed at the time of the compensation is below the initial speed, there will be no acceleration or deceleration for the compensation pulse output. If that speed is at least equal to the initial speed, there will be acceleration and deceleration.

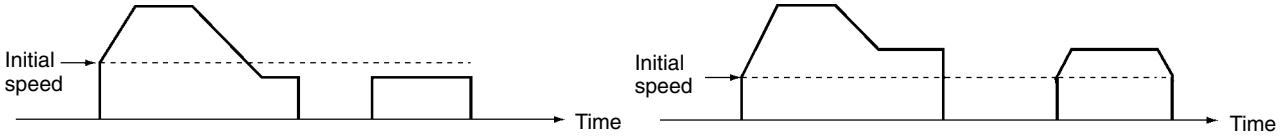

The override is not enabled with respect to pulse output during origin search, but it is enabled with respect to the amount of pulse output set for origin compensation.

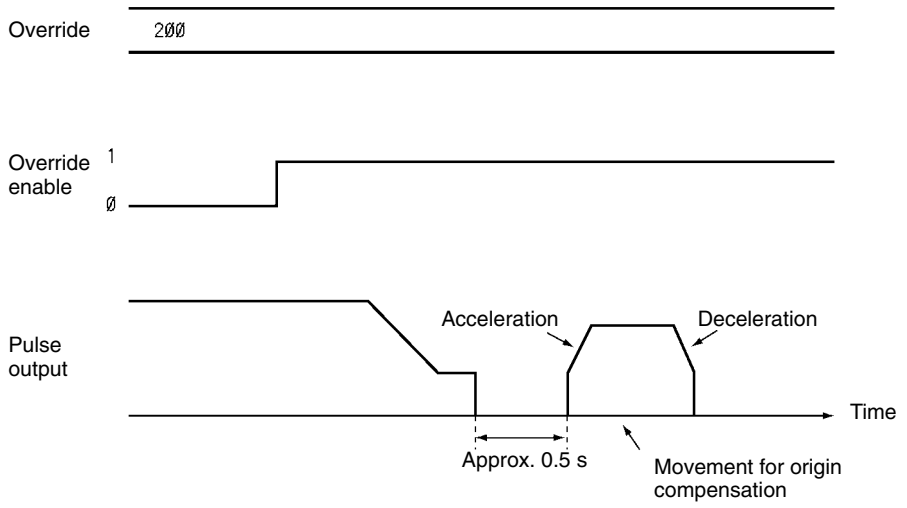

Note If the speed during movement for compensation is greater than the initial speed as a result of the override, there will be acceleration and deceleration with respect to the pulse output.

6-3 Origin Search Timing Charts

6-3-1 Without Origin Compensation

When Using an Origin Proximity Input Signal

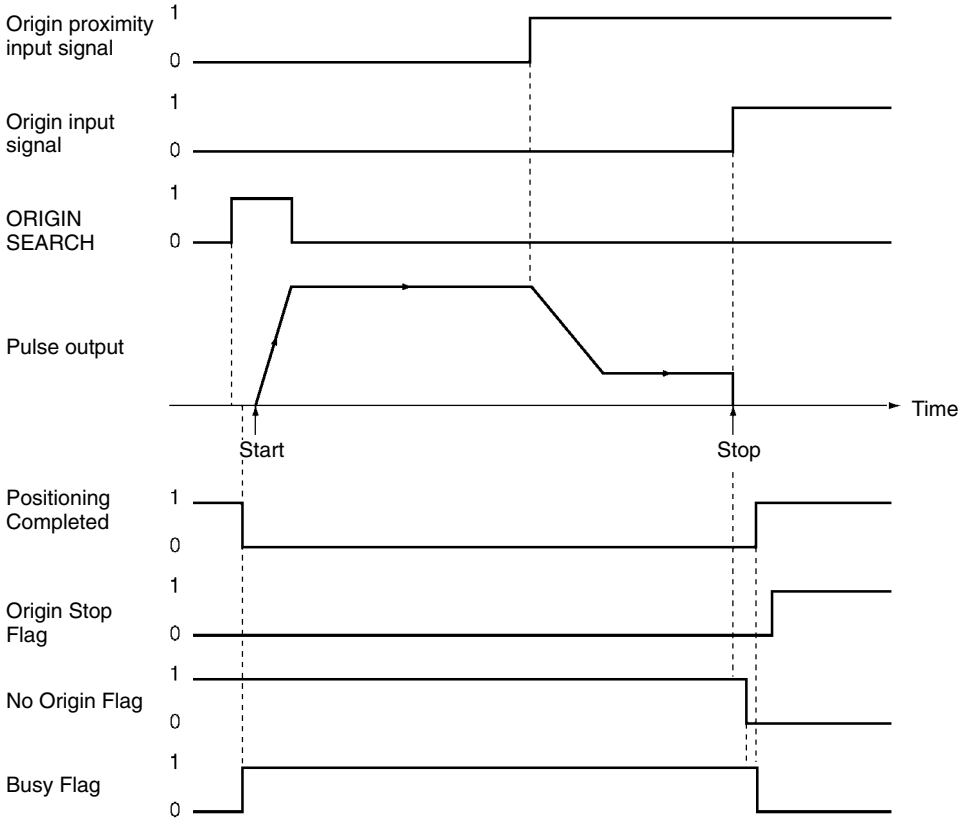

When Not Using an Origin Proximity Input Signal

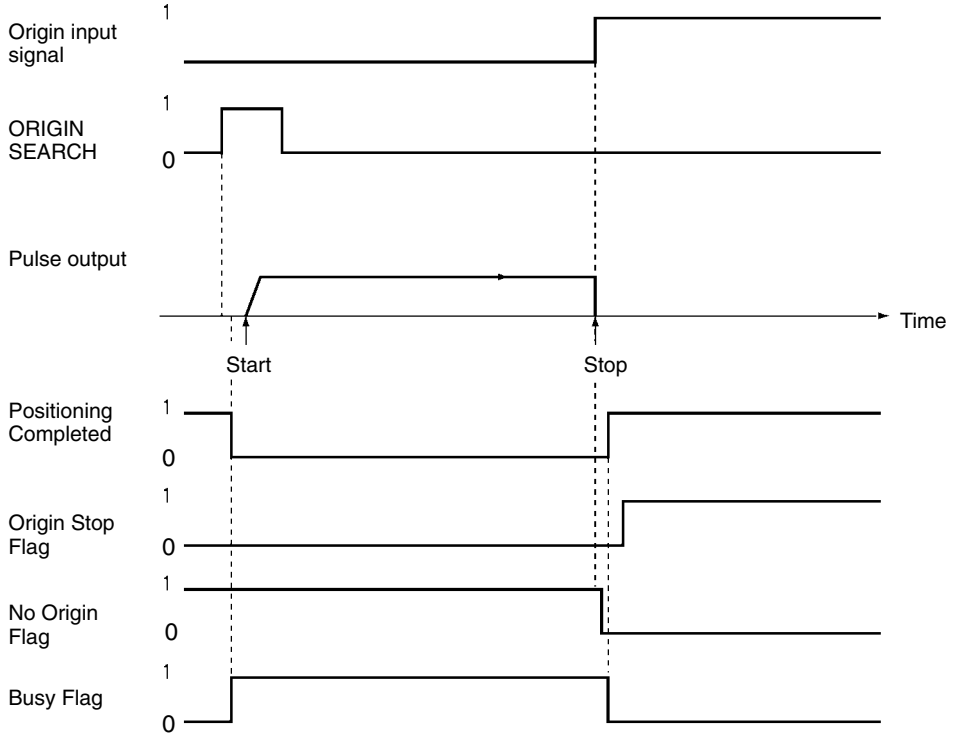

6-3-2 With Origin Compensation

When Using an Origin Proximity Input Signal

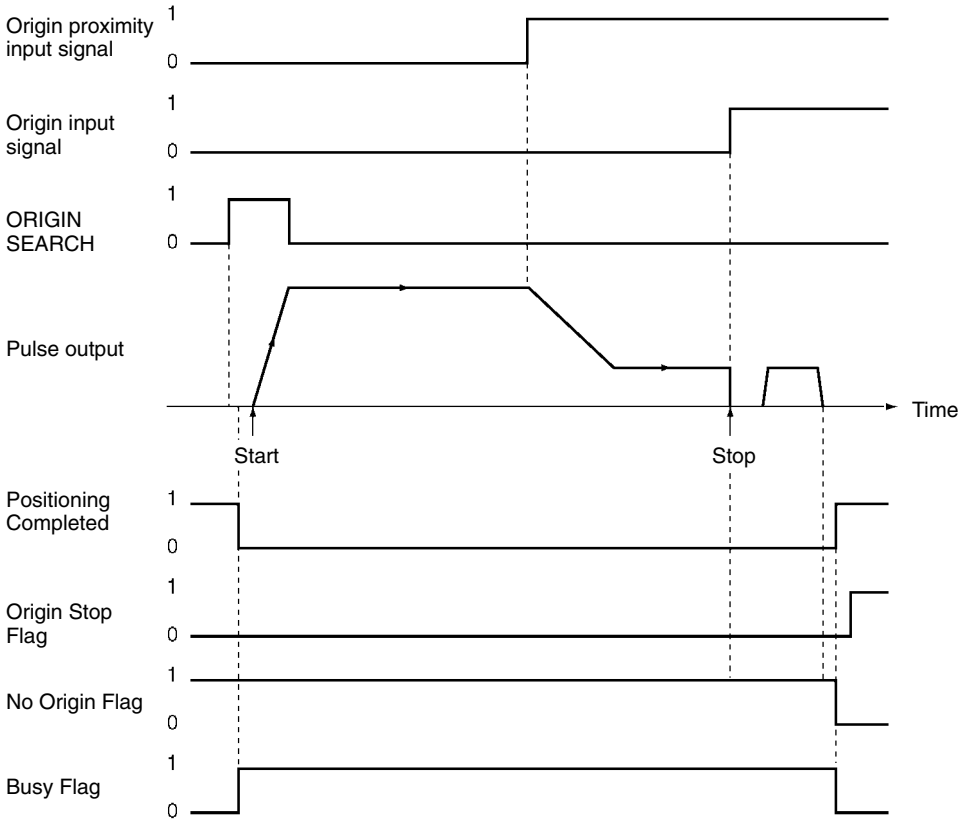

When Not Using an Origin Proximity Input Signal

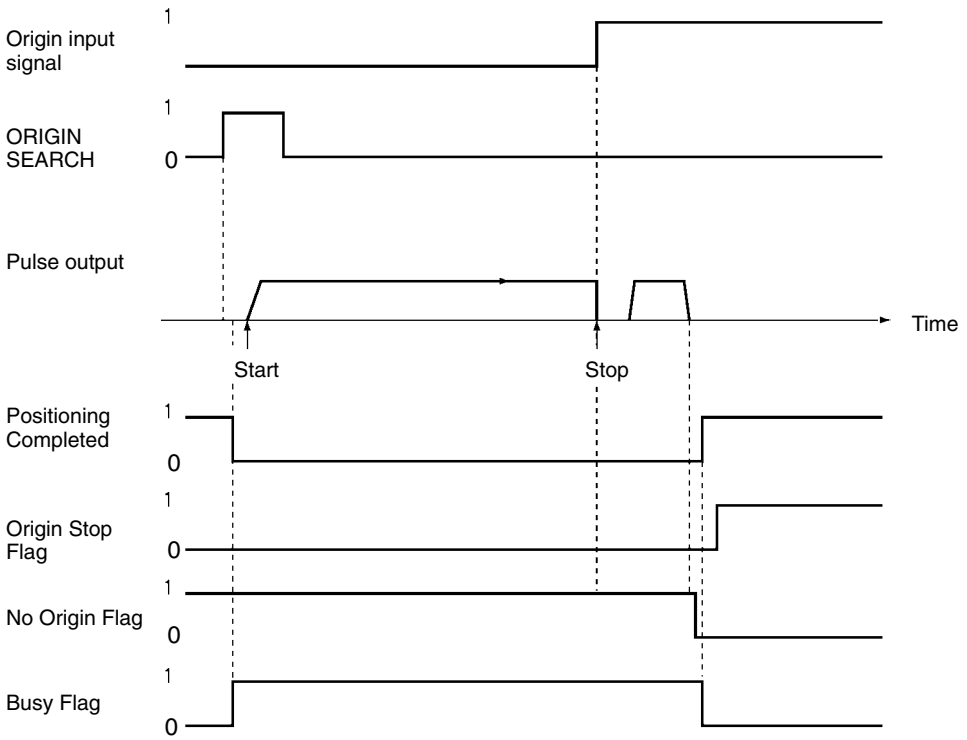

6-3-3 Origin Search Deceleration Stop

When a deceleration stop is executed during an origin search, the origin search is canceled. The following diagram shows an example of a deceleration stop during an origin search when there is an origin proximity input signal reversal.

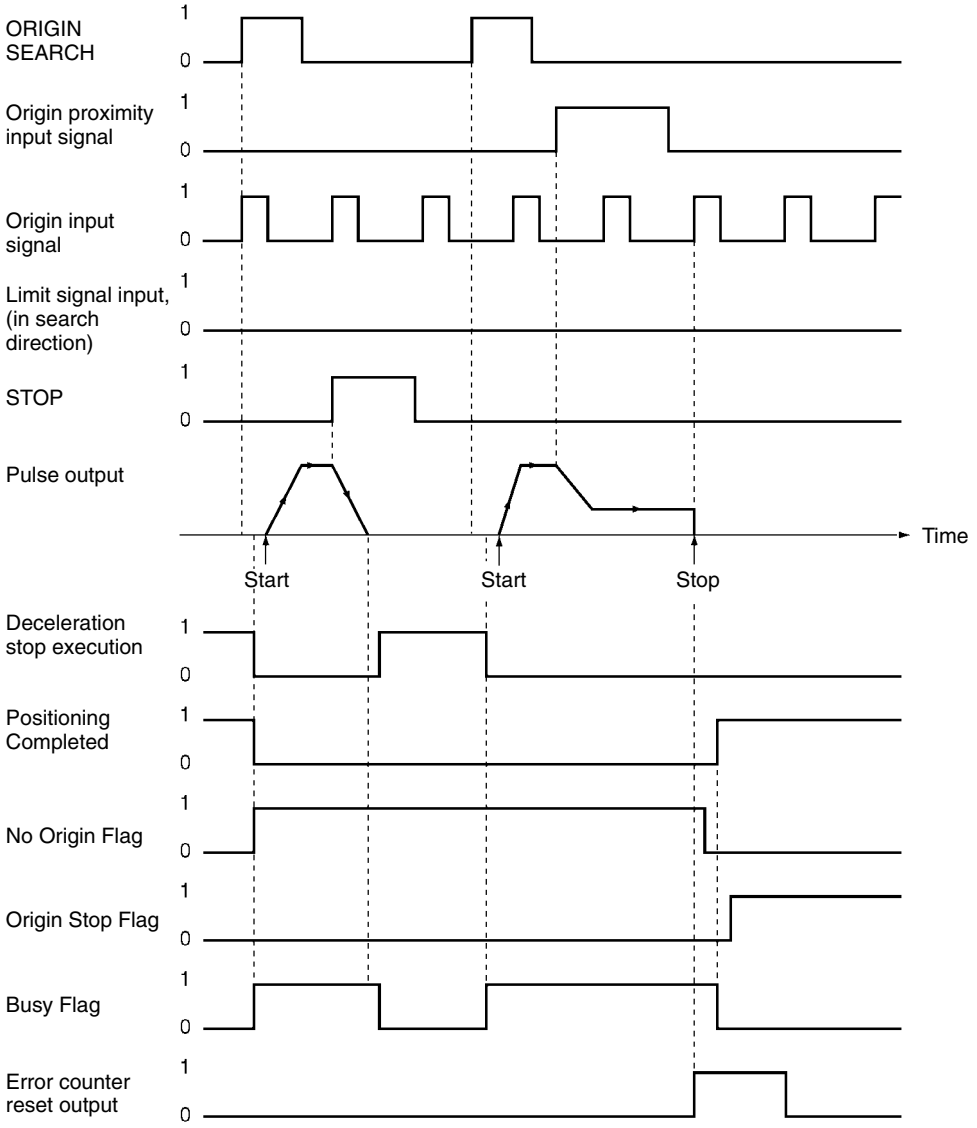

6-3-4 Emergency Stop of Origin Search

The origin search will be interrupted if the emergency stop input signal (A20/B20) is input while the origin search is being executed. To execute the origin search again, first release the pulse output prohibition.

The following diagram shows an example of an emergency stop during an origin search when there is an origin proximity input signal reversal.

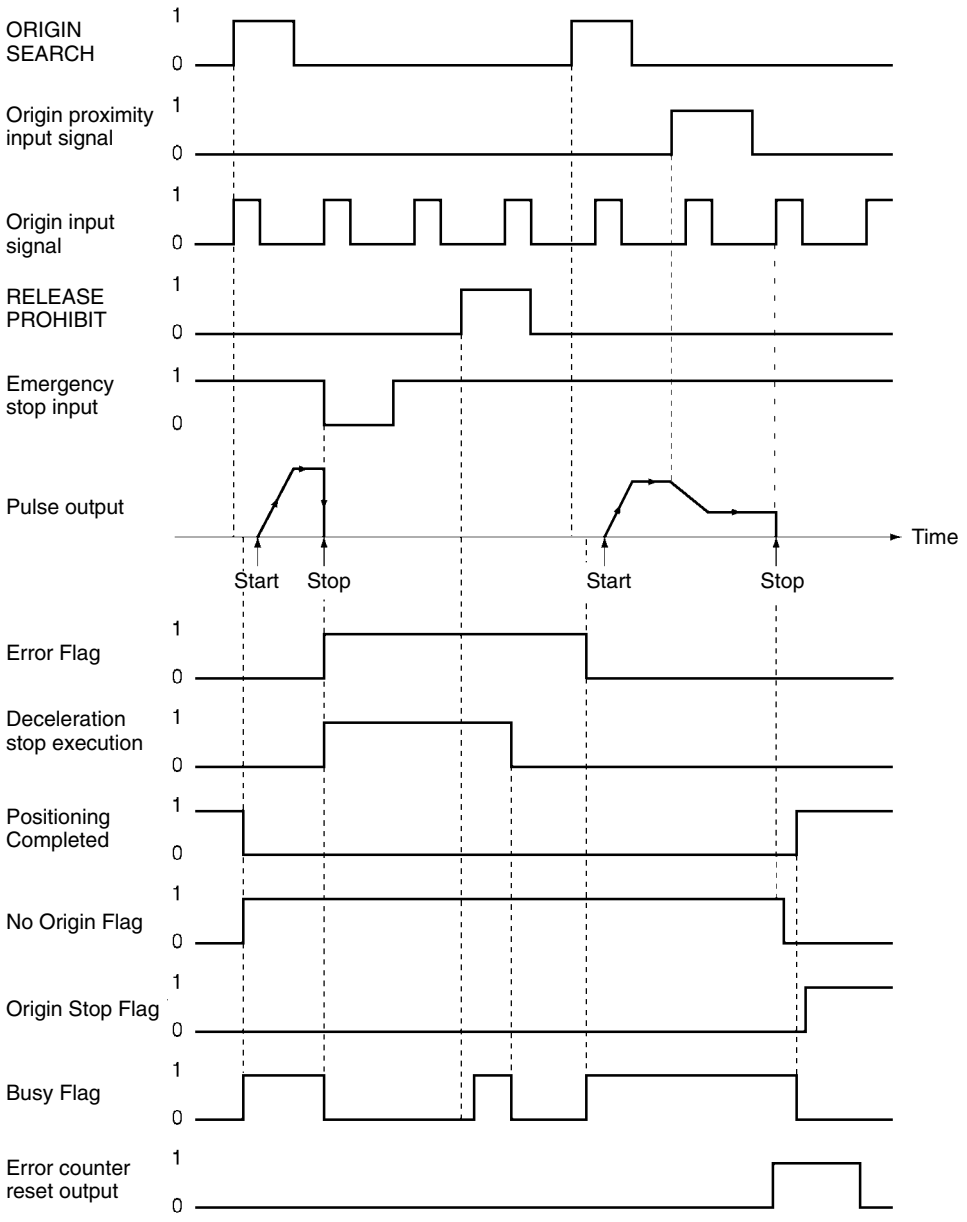

6-4 Origin Return

The origin return operation is used to return the axis to the origin from any position. It is executed by the rising edge of the ORIGIN RETURN command.

Note Execute ORIGIN RETURN when the origin has been established. If the origin has not been established, a present position unknown error (error code 5040) will be generated.

6-4-1 Allocation of Operating Memory Area and Setting of Operating Data Area

Operating Memory Area

Name	Model	Operating memory area				Setting	Details
		X axis	Y axis	Z axis	U axis		
ORIGIN RETURN	NC413	n	n+2	n+4	n+6	07	↑ : Start of origin return
	NC213	n	n+2				
	NC113	n					
Origin Stop Flag	NC413	n+8	n+11	n+14	n+17	07	1: Stopping at origin; 0: Other
	NC213	n+4	n+7				
Busy Flag	NC113	n+2				13	1: Busy

Operating Data Area

Name	Model	Operating memory area				Setting	Details
		X axis	Y axis	Z axis	U axis		
Speed designation	NC413	I+8	I+13	I+18	I+23	00 to 15	15 14 13 12 … 00 [ ][ ][x10^2][x10^1][x10^0] (Unit: pps) x10^3 Factor: 00: x 1, 01: x 10, 10: x 100, 11: x1,000
	NC213	I+8	I+13				
	NC113	I+8					
Acceleration time number Deceleration time number	NC413	I+10	I+15	I+20	I+25	08 to 15	15 12 11 8 7 4 3 0 [ ][ ][0][0] Acceleration time No.: From 0 through 9 (BCD) Deceleration time No.: From 0 through 9 (BCD) When the setting is 0, the parameter's acceleration or deceleration time is used.
	NC213	I+10	I+15				
	NC113	I+10					

The origin return will not operate if the software limit switch has been disabled by the axis parameters, by making the CW limit less than or equal to the CCW limit. (At the time of the command, the present position is "0.")

6-4-2 Timing Chart

A timing chart for executing an origin return on the X axis looks like this:

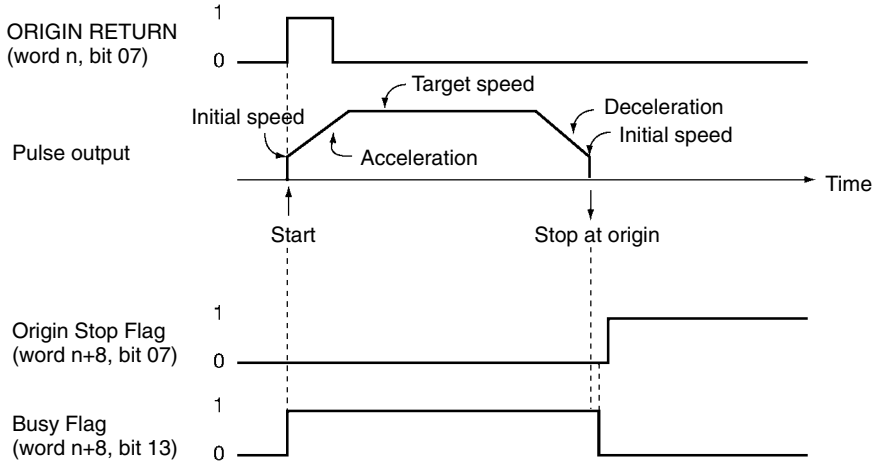

SECTION 7
Direct Operation

This section provides an outline of direct operation, details about data areas and how to set data, and sample programs.

7-1 Outline 138
7-2 Setting Data for Use With Direct Operation 140
7-3 Operations With Direct Operation 141
7-3-1 Starting Direct Operation 141
7-3-2 Direct Operation and the Operating Data Area 141
7-3-3 Multiple Starts With Direct Operation 142
7-3-4 Multiple Start Operating Patterns 142
7-3-5 Starting Direct Operation During Memory Operation 143
7-4 Procedures for Setting Data for Direct Operation 143
7-5 Direct Operation Timing Charts 144
7-6 Sample Program 146
7-6-1 Details of Operation 146
7-6-2 Setting Conditions and Details 146
7-6-3 Sample Program 147

7-1 Outline

With memory operation, the positioning sequences describing the operating patterns have to be transferred to the Position Control Unit. In contrast, with direct operation, position control can be carried out by simply writing the positions and speeds each time to the designated area (the operating data area) in the Programmable Controller. As a result, the positions and speeds can be input from outside and processed by calculating present positions from the Position Control Unit, for example, and position control executed with the data as if it were new data. This fact allows more flexibility, and permits position control to be exercised more simply.

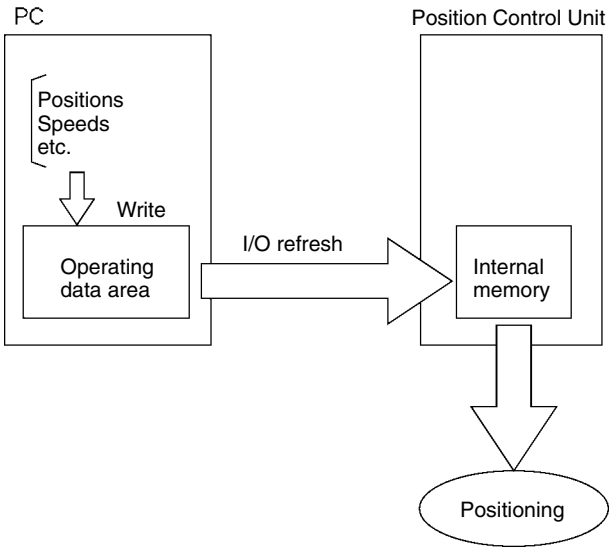

Note Linear interpolation is not possible with direct operation.

With direct operation, position control is carried out by setting positions, speeds, and acceleration/deceleration times each time in the operating data area specified by the common parameters.

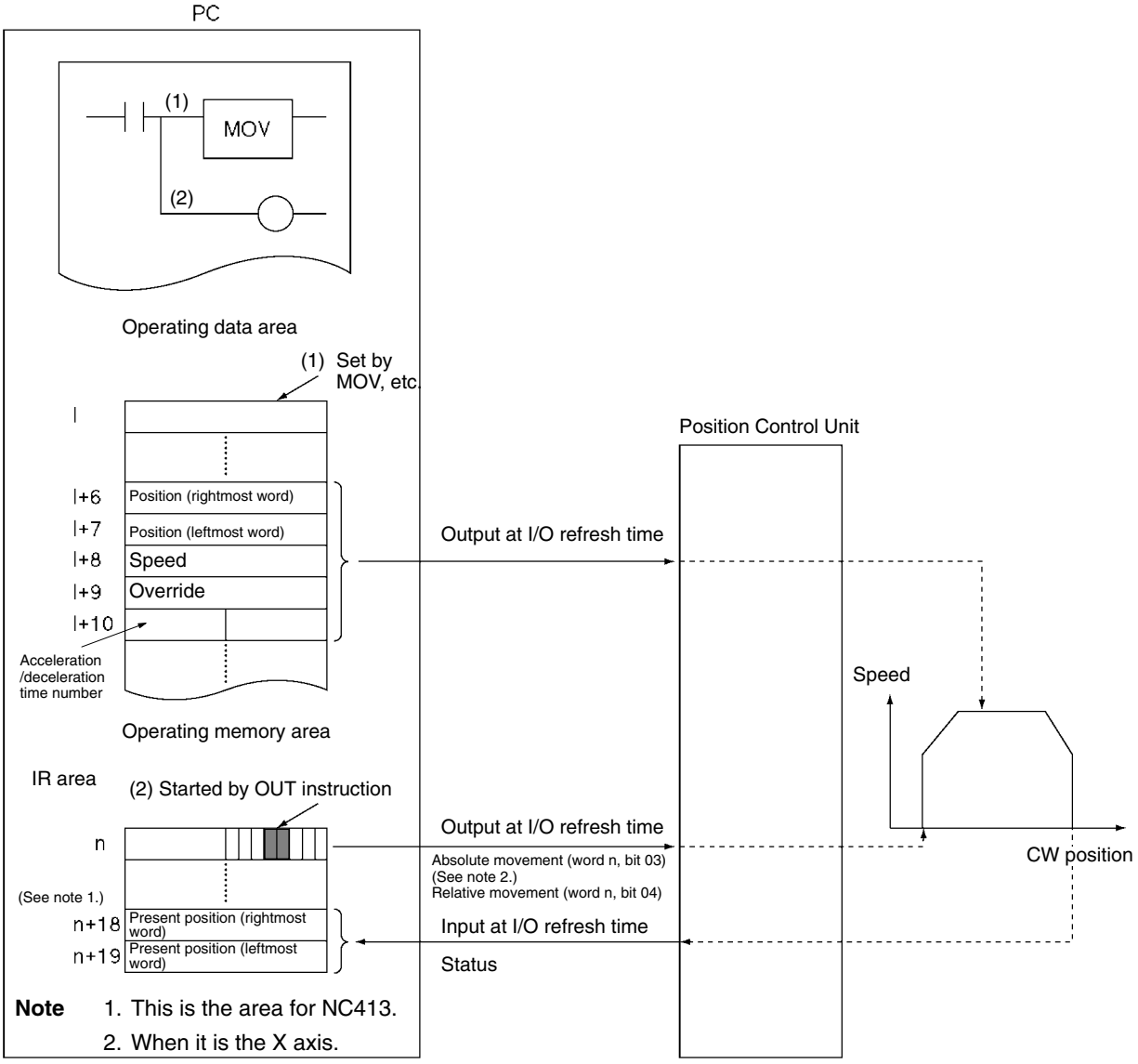

I: Beginning word address of area designated in common parameters.
n: Beginning word address of work bit determined when the Position Control Unit's unit number was set.

The positions and speeds set in the operating data area by the MOV instruction are output to the Position Control Unit automatically at I/O refresh time. Data transfer is not required. Transfer the designated acceleration/deceleration time number in advance.

Start is executed by the ABSOLUTE MOVEMENT command (for the X axis: word n, bit 03) allocated to the operating memory area (IR area) or when the RELATIVE MOVEMENT command (for the X axis: word n, bit 04) is turned ON.

- The ABSOLUTE MOVEMENT command determines the position from the absolute position in relation to the origin. With the ABSOLUTE MOVEMENT command, a present position unknown error (error code 5040) will be generated if the origin has not been established.
- With the RELATIVE MOVEMENT command, position control is based on the amount of relative movement from the present position. Relative movement moves the axis by a relative amount from the start position. It can be executed even when the origin has not been established.

- When the software limit has been disabled by the axis parameters (i.e., CW limit equal to or less than the CCW limit) the position will be determined by the amount of relative movement even if an absolute position is specified. (At that time, the present position is set to “0.”)

7-2 Setting Data for Use With Direct Operation

This section provides a simple description of the axis parameters, operating memory area and operating data area used in direct operation. For details on how to set these items and for other details, refer to *4-3 Axis Parameters Area*, *4-4 Operating Memory Area* and *4-1 Overall Structure*.

Axis Parameters

Item	Parameter area for each axis				Bit	Details
	NC113	NC213	NC413			
	X axis	Y axis	Z axis	U axis		
Initial speed	m+7	m+31	m+55	m+79	00 to 15	15 14 13 12 … 00 [ ][ ][x10^2][x10^1][x10^0] x10^3 Factor: 00: x 1, 01: x 10, 10: x 100, 11: x1,000
Acceleration time	m+15 m+16	m+39 m+40	m+63 m+64	m+87 m+88	00 to 15	15 Leftmost 00 15 Rightmost 00 [0][0][x10^5][x10^4][x10^3][x10^2][x10^1][x10^0] Setting range: 0 through 250,000 ms
Deceleration time	m+17 m+18	m+41 m+42	m+65 m+66	m+89 m+90	00 to 15	15 Leftmost 00 15 Rightmost 00 [0][0][x10^5][x10^4][x10^3][x10^2][x10^1][x10^0] Setting range: 0 through 250,000 ms

Operating Memory Area

Item	Model	Operating memory area				Bit	Details
		X axis	Y axis	Z axis	U axis		
ABSOLUTE MOVEMENT	NC413	n	n+2	n+4	n+6	03	↑ : Absolute movement starts.
	NC213	n	n+2				
RELATIVE MOVEMENT	NC113	n				04	↑ : Relative movement starts.
INTERRUPT FEEDING						05	↑ : Interrupt feeding starts.
POSITIONING COMPLETED	NC413	n+8	n+11	n+14	n+17	05	↑ : Positioning is completed.
	NC213	n+4	n+7				
Busy Flag	NC113	n+2				13	1: Busy

Operating Data Area

Item	Model	Operating data area				Bit	Details
		X axis	Y axis	Z axis	U axis		
Position designation (leftmost) (rightmost)	NC413 NC213 NC113	I+6 I+7 I+6 I+7 I+6 I+7	I+11 I+12 I+11 I+12	I+16 I+17	I+21 I+22	00 to 15	15 Leftmost 00 15 Rightmost 00 [ ] [x10^6] [x10^5] [x10^4] [x10^3] [x10^2] [x10^1] [x10^0] Sign: 0: plus (CW); 1: minus (CCW)
Speed designation	NC413 NC213 NC113	I+8 I+8 I+8	I+13 I+13	I+18	I+23	00 to 15	15 14 13 12 00 [ ] [ ] [x10^2] [x10^1] [x10^0] (Units are pps) x10^3 Factor: 00: x 1, 01: x 10, 10: x 100, 11: x1,000
Acceleration time number	NC413 NC213 NC113	I+10 I+10 I+10	I+15 I+15	I+20	I+25	08 to 11	15 12 11 08 00 [ ] [ ] [0] [0] Acceleration time numbers are from 0 through 9 (BCD) Deceleration time numbers are from 0 through 9 (BCD) When the setting is 0, the parameter acceleration/deceleration time is used.
Deceleration time number						12 to 15	

7-3 Operations With Direct Operation

7-3-1 Starting Direct Operation

There are two ways of starting direct operation.

1, 2, 3...

1. Turn the ABSOLUTE MOVEMENT command from OFF to ON (↑)
2. Turn the RELATIVE MOVEMENT command from OFF to ON (↑)

When Executed by ABSOLUTE MOVEMENT Command

Positions to the location arrived at by designating the position for the operating data area as absolute.

When Executed by RELATIVE MOVEMENT Command

Positions to the location arrived at by designating the position for the operating data area as incremental.

Interrupt feeding and jogging (speed feeding) are available to start direct operation. See *9-1 Jogging* and *9-3 Interrupt Feeding* for details about these operations and how to use them.

7-3-2 Direct Operation and the Operating Data Area

Positioning operations using direct operation are determined by data set in the operating data area.

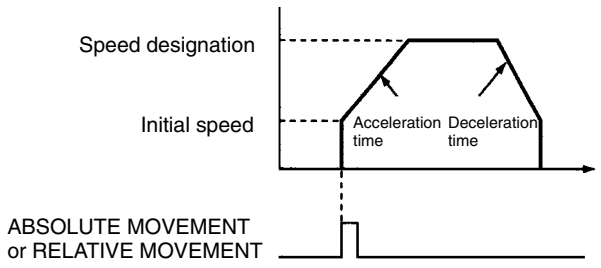

7-3-3 Multiple Starts With Direct Operation

During direct operation, relative or absolute movements can be carried out by setting new positions, speeds, acceleration, and deceleration in the operating data area. In this event, the positioning currently being executed is cancelled and the axis is moved towards the newly designated position.

Note If data in the Operating Data Area is changed during direct operation, position data will become effective when the next direct operation is designated. Speed data goes into effect as soon as it is written to the Operating Data Area, unrelated to any other commands.
The value specified at the first startup can be used for acceleration/deceleration data.

7-3-4 Multiple Start Operating Patterns

When a reversal is specified by the ABSOLUTE MOVEMENT command, positioning will first decelerate at the deceleration time that has been set and then accelerate in the reverse direction at the acceleration time that has been set. Multiple reversals may not be possible if they are generated while a reversal operation is already being performed.

Without Reversal

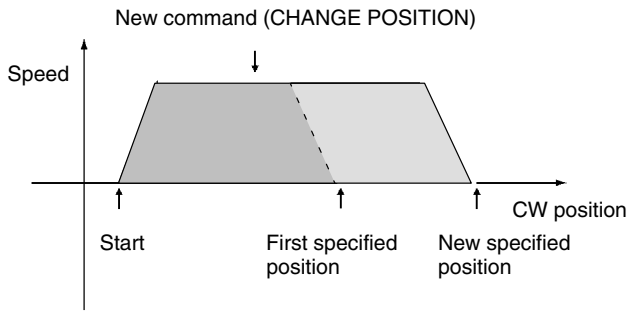

With Reversal

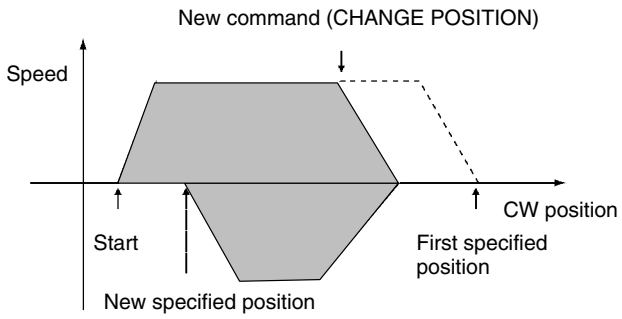

If the value of the RELATIVE MOVEMENT command causes a reverse, an emergency reverse will occur when the instruction is received.

Without Reversal

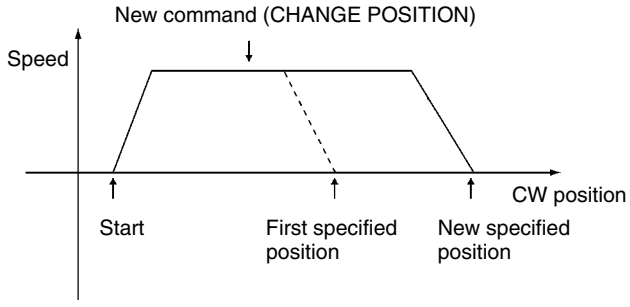

With Reversal

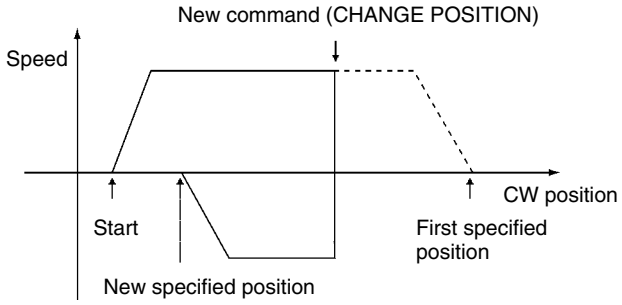

7-3-5 Starting Direct Operation During Memory Operation

Direct operation can be used even during memory operation, by bringing the active axis to a decelerated stop. The interrupted sequence number will be retained as long as new sequence numbers are not set and provided an origin search or an origin return is not executed, or the present position is reset.

When memory operation is restarted, the interrupted sequence number will be executed. Positioning in memory operation after direct operation has been used will vary according to the absolute and relative positions in the position data.

Absolute Movement Memory Operation

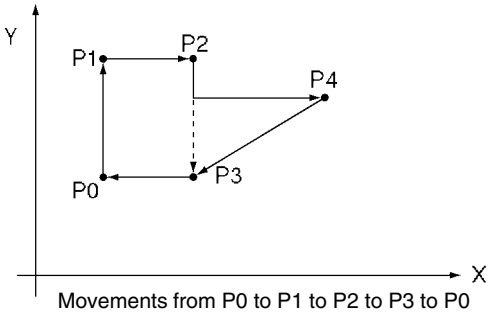

Movements from P0 to P1 to P2 to P3 to P0 are all executed with absolute position data.

↓

While moving from P2 to P3, stop with a deceleration stop and move to P4 in a direct operation.

↓

When memory operation is re-started, the movements are from P4 to P3 to P0.

Relative Movement Memory Operation

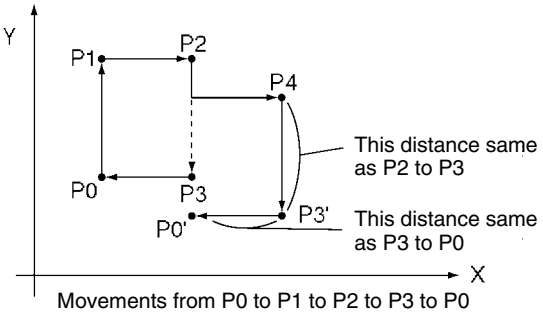

Movements from P0 to P1 to P2 to P3 to P0 are all executed with relative position data.

↓

While moving from P2 to P3, stop with a deceleration stop and move to P4 in a direct operation.

↓

When memory operation is re-started, the movements are from P4 to P3' to P0'.

Note If an attempt is made to execute something else while any of the following operations are in progress, a multiple start error (error code 8000) will be generated: start, independent start, origin search, changing the present position, jogging, teaching, releasing the pulse output prohibition, absolute movement, relative movement, interrupt feeding, or saving data. Refer to the Busy Flag and wait until the current operation has been completed before executing another operation.

7-4 Procedures for Setting Data for Direct Operation

The procedures for setting data for direct operation are explained below using the X axis as an example.

1, 2, 3...

1. Setting the common parameter area (Refer to *4-2 Common Parameter Area*.)
   m: Determines whether DM or EM is made the operating data area.
   m+1: Sets the beginning word (I) of the operating data area.
   m+2: Designates the mounting position and parameters.
2. Powering up again or re-starting
   The data in the common parameter area set in (1) above is enabled.
3. Setting the operating data area (Refer to *4-5 Operating Data Area*.)
   Set the position in I+6 and I+7.
   Set the speed in I+8.
   Set the acceleration time number in I+10
4. Executing the absolute movement or relative movement
   Turn the ABSOLUTE MOVEMENT command bit (word n, bit 03) or the RELATIVE MOVEMENT command bit (word n, bit 04) from OFF to ON.

The operations in (1) and (2) above are required when using a Position Control Unit for the first time, or when modifying the data in the common parameter area.

7-5 Direct Operation Timing Charts

This section provides timing charts showing ABSOLUTE MOVEMENT command and RELATIVE MOVEMENT command execution. The X axis is used as an example.

Timing Charts

Example 1: Moving to absolute position at 10,000 pulses

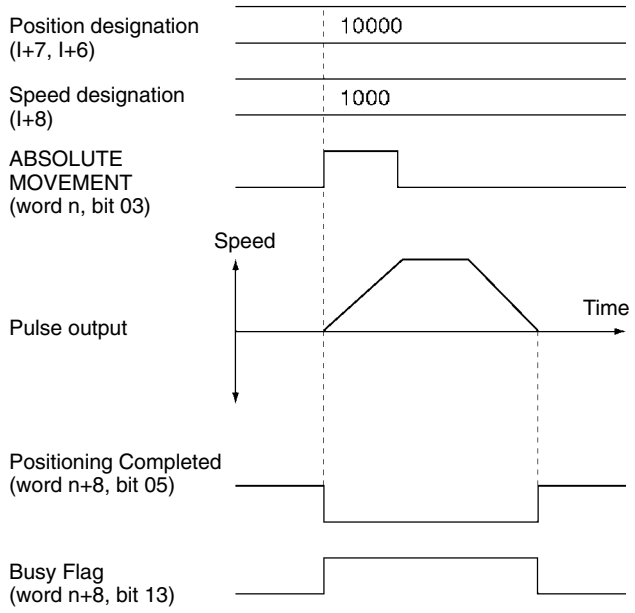

Example 2: Changing absolute position to –10,000 pulses while moving to absolute position at 10,000 pulses

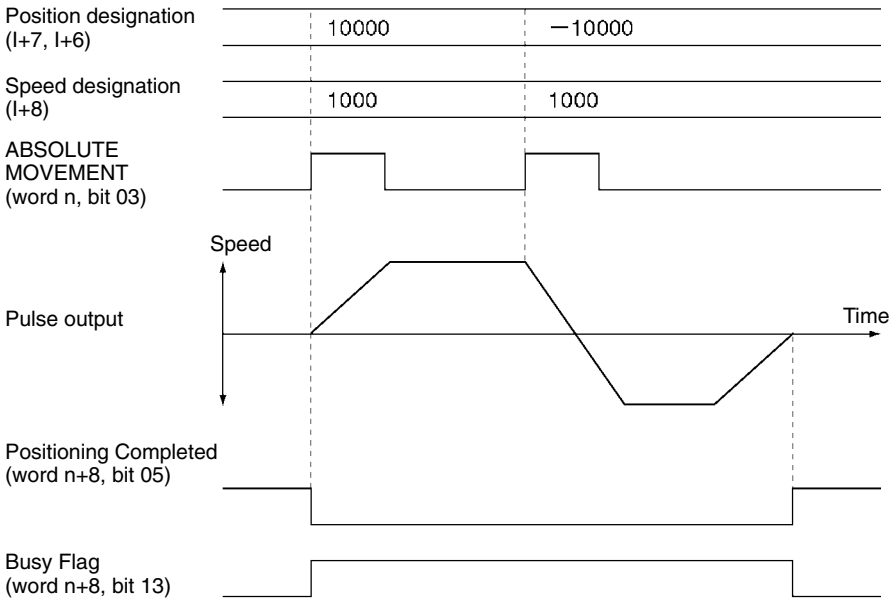

Example 3: Moving to relative position at 10,000 pulses

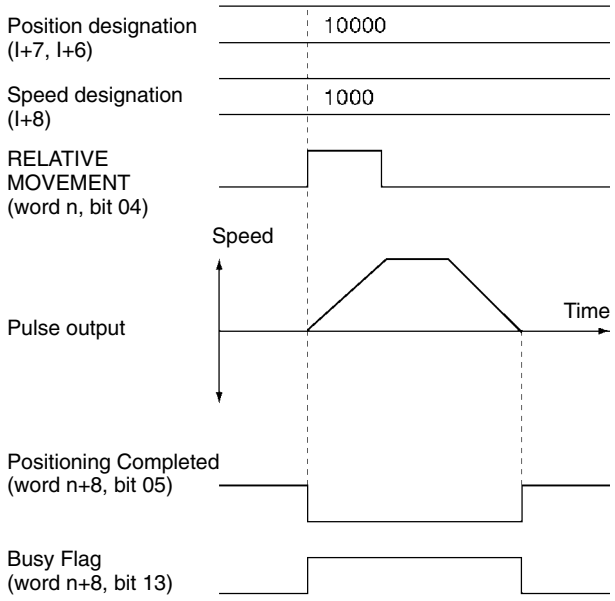

Example 4: Changing the relative position to –10,000 pulses while moving to relative position at 10,000 pulses

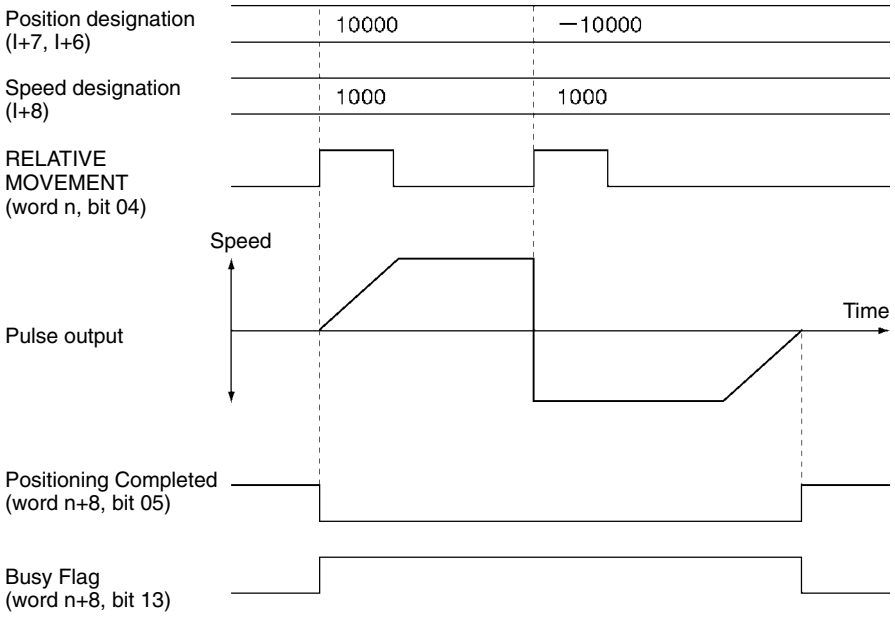

7-6 Sample Program

This section provides a sample program for operating the axes. The Position Control Unit used is a C200HW-NC113.

The factory settings in the PCU are used for the axis parameters. If the values have been modified by data transfer, for example, the results achieved will vary from those given below.

7-6-1 Details of Operation

The X axis is moved by relative movement at a speed of 15,000 pps to the position at 135,000 pulses. The speed is not modified by override.

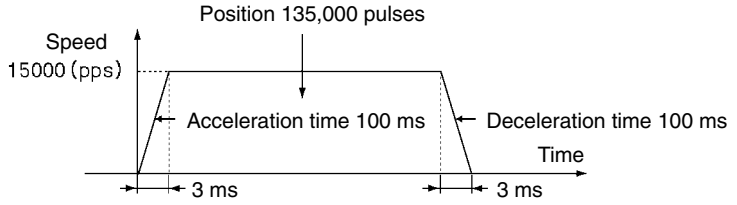

The values set for the acceleration and deceleration times and the actual acceleration and deceleration times are related to the values set for the actual target speeds and maximum speeds for the axis parameter area. For details, refer to *Appendix B Estimating Times and Pulses for Acceleration/Deceleration*.

7-6-2 Setting Conditions and Details

The following table shows details of settings and conditions.

Item	Details
Unit number of Position Control Unit	Set to Unit #3. Common parameter area: DM 1300 through DM 1302. Operating memory area: Words 130 through 134. The above areas are allocated automatically by setting the unit number.
Designation of operating data area	DM 1300 [0 0 0 D] DM 1301 [0 5 0 0] - - - - DM 0500
Unit mounting position and parameter designation	DM 1302 [0 0 0 0] - - - - Mount on the CPU Rack. Use the Position Control Unit's existing parameters.

7-6-3 Sample Program

For details on the operating data area, refer to *4-5 Operating Data Area*.

Data Configuration and Operating Data Area Set by the Program

Name	Configuration	DM	Contents
Position	15 I+7 00 15 I+6 00 I+7 / I+6: [ ] [$x10^6$] [$x10^5$] [$x10^4$] [$x10^3$] [$x10^2$] [$x10^1$] [$x10^0$] Sign 0: Plus 1: Minus Set range is from –9999999 through +9999999	0506 0507	5000 0013
Speed	15 14 13 12 00 I+8: [ ] [ ] [$x10^2$] [$x10^1$] [$x10^0$] (Unit: pps) $x10^3$ Factor: 00: x 1, 01: x 10, 10: x 100, 11: x1,000	0508	5500
Acceleration/ deceleration time number	15 0807 00 Acceleration time: 0 through 9 Deceleration time: 0 through 9 If “0” is set, the acceleration/deceleration times set in the parameter data area (m+15 through m+18) will be used. If “1” through “9” are set, acceleration/deceleration time from No. 1 through No. 9 will be used.	0510	0000

Program Example

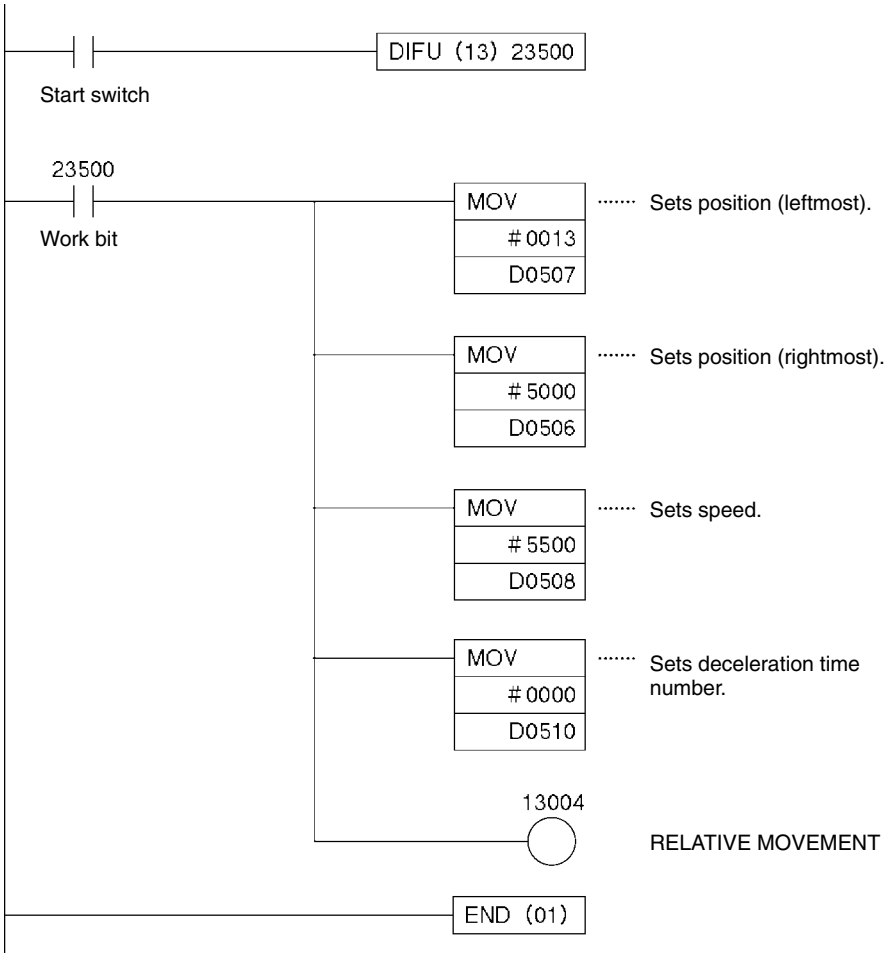

SECTION 8
Memory Operation

This section provides an outline of memory operation, details about data areas and how to set data, and sample programs.

8-1 Outline 150
8-1-1 Axis Designation 151
8-1-2 Axis Designation and Flags 151
8-2 Setting Data for Use in Memory Operation 154
8-3 Operations With Memory Operation 155
8-3-1 Starting Memory Operation 155
8-3-2 Memory Operation In Accordance With Positioning Sequences 155
8-3-3 Linear Interpolation 159
8-3-4 Using Continuous Completion with Linear Interpolation 160
8-4 Procedures for Setting Data for Memory Operation 162
8-5 Timing Chart for Memory Operation 162
8-6 Sample Program 165
8-6-1 Operation 165
8-6-2 Conditions and Details of Settings 165
8-6-3 Setting Data 166
8-6-4 Program Example 167

8-1 Outline

During memory operation, positioning sequence data such as positions and speeds are transferred to the internal memory of the Position Control Unit in advance, and positioning is carried out by following the positioning sequences according to instructions from the Programmable Controller.

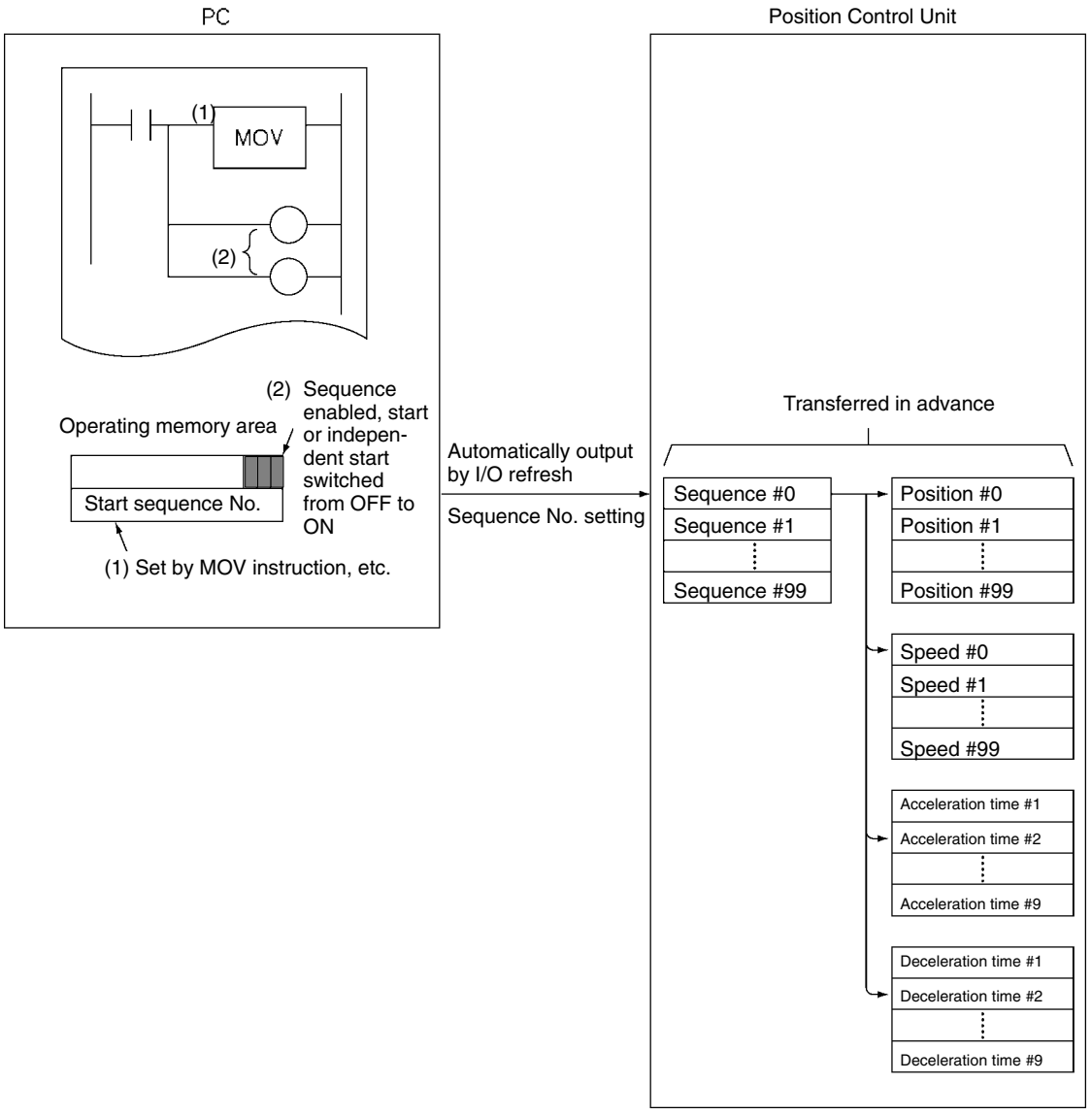

The positioning sequences are sent in advance by data transfer to the Position Control Unit. After the sequence numbers to be used have been set in the operating memory area, the Sequence Number Enable is switched ON.

Start is executed when the start or independent start allocated to the operating memory area (IR area) is turned ON.

The Position Control Unit carries out positioning using the speeds, acceleration times, deceleration times and dwell times set in the designated sequence numbers. The positions have the same numbers as the positioning sequences.

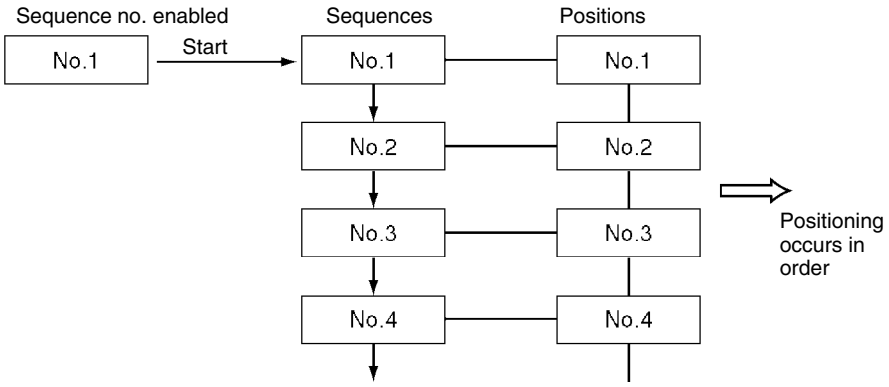

Note 1. Since the sequence number is saved in the Position Control Unit, the Unit is capable of executing the subsequent sequence after being stopped with the deceleration stop. However, if the origin search, origin return, or present position preset is executed, this sequence number will be lost. Therefore, the sequence number needs to be set to “enable” and the Unit must be restarted.

2. Sequence #0 is executed after sequence #99.

8-1-1 Axis Designation

Which axis is to be positioned with the positioning sequence is specified by the axis designation within the positioning sequence. The positions used are those for the axes designated by the axis designation. For data other than position data, the data of the started axis is used as the data to be designated in the sequence data.

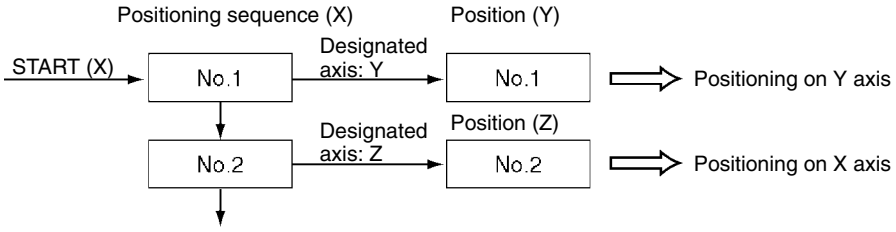

If several axes are designated by the axis designation, interpolated operation will be executed for the designated axes.

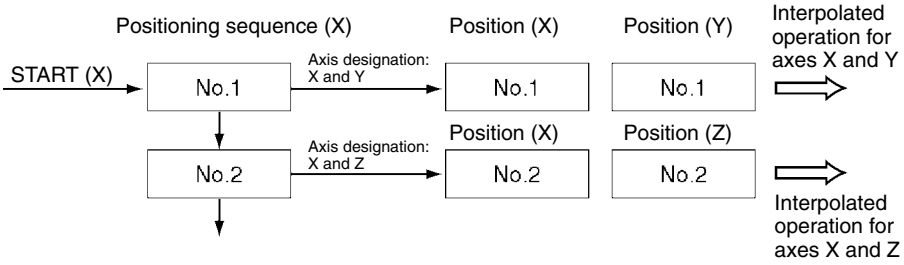

8-1-2 Axis Designation and Flags

The status and present position allocated to input bits are input for the axis which has executed the start (the axis for the positioning sequence) and for the actual operating axis specified by the axis designation.

Axis Executing Start

Model	Word				Bit	Name
	X axis	Y axis	Z axis	U axis		
NC413	n+8	n+11	n+14	n+17	00 to 03	Output code
NC213	n+4	n+7			04	Waiting for memory operation
NC113	n+2				05	Positioning completed
					11	Teaching completed
					12	Error Flag
					14	Data transferring (X axis only)

Operating Axis

Model	Word				Bit	Name
	X axis	Y axis	Z axis	U axis		
NC413	n+8	n+11	n+14	n+17	06	No Origin Flag
NC213	n+4	n+7			07	Origin Stop Flag
NC113	n+2				08	Zone 0
					09	Zone 1
					10	Zone 2
					12	Error Flag
					13	Busy Flag
					15	Deceleration stop execution
NC413	n+9 n+10	n+12 n+13	n+15 n+16	n+18 n+19	00 to 15 00 to 15	Present position (rightmost) Present position (leftmost)
NC213	n+5 n+6	n+8 n+9				
NC113	n+3 n+4					

Note The Error Flag (bit 12) is input to the active axis or the operating axis depending on the type of error that has been generated.

In the following example, the Y axis has been specified by the axis designation when starting from the X axis.

PCU Model: C200HW-NC413
Sequence #0 (X)
Axis Designated: Y
Completion Code: Terminating

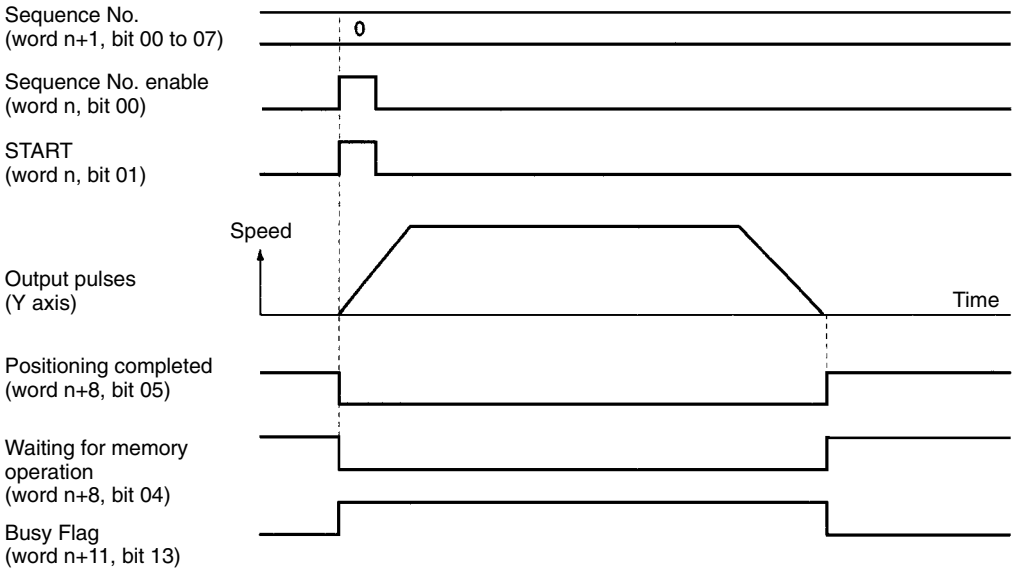

- A multiple start error (error code 8000) will occur if the operating axis designation in one axis designation in the positioning sequence is overlapped by another positioning sequence.
- A multiple start error (error code 8000) will occur if the active axis and the axis for which start has been executed are the same axis, but the axes designated in the respective positioning sequences are different.

Example:

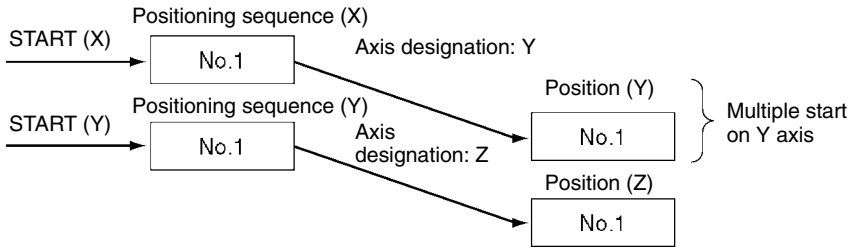

- Subsequent commands will be ignored if the axis for which start has been executed for memory operation is the same as the axis for commands other than memory operation (such as origin search), but a multiple start error will not occur.

Example:

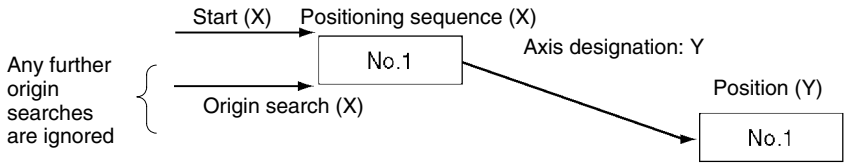

Therefore, for memory operation, commands for the active axis are treated as multiple starts.

8-2 Setting Data for Use in Memory Operation

Following is a simple explanation of the axis parameters and operating memory area used when executing memory operations. For details on how to set these, refer to *4-3 Axis Parameters Area* and *4-4 Operating Memory Area*.

Axis Parameters

Item	Axis parameter area				Bits	Contents
	NC113	NC213	NC413			
	X axis	Y axis	Z axis	U axis		
I/O setting	m+4	m+28	m+52	m+76	04 to 06	08 03 Limit input signal type 0: N.C. input; 1: N.O. input Origin proximity input signal type 0: N.C. input; 1: N.O. input Origin proximity input signal type 0: N.C. input; 1: N.O. input
Operation mode Origin search operation Origin detection method Origin search direction	m+5	m+29	m+53	m+77	00 to 03 04 to 07 08 to 11 12 to 15	15 00 Operation mode 0 to 3: Modes 0 to 3 Origin search operation 0: Reversal mode 1 1: Reversal mode 2 2: Single-direction mode Origin detection method 0: With origin proximity input signal reversal 1: Without origin proximity input signal reversal 2: Origin proximity input signal not used 3: Limit input signal used instead of origin proximity input signal Origin search direction: 0: CW; 1: CCW.
Acceleration time	m+15 m+16	m+39 m+40	m+63 m+64	m+87 m+88	00 to 15	15 Leftmost 00 15 Rightmost 00 0 0 x10^5 x10^4 x10^3 x10^2 x10^1 x10^0 Setting range: 0 to 250,000 (ms)
Deceleration time	m+17 m+18	m+41 m+42	m+65 m+66	m+89 m+90	00 to 15	

Note The speed data specified by the initial speed number in the sequence data is used as the initial speed for memory operation.

Operating Memory Area

Item	Model	Operating memory area				Bits	Contents
		X axis	Y axis	Z axis	U axis		
START	NC413	n	n+2	n+4	n+6	01	↑ : Start begins
INDEPENDENT START	NC213	n	n+2			02	↑ : Independent start begins
	NC113	n					
Sequence number enable						00	1: Enable, 0: disable
Sequence number	NC413	n+1	n+3	n+5	n+7	00 to 07	Designates sequence number (from 00 through 99) in BCD.
	NC213	n+1	n+3				
	NC113	n+1					
Waiting for memory operation	NC413	n+8	n+11	n+14	n+17	04	1: Waiting for memory operation 0: Other than above
	NC213	n+4	n+7				
Positioning completed	NC113	n+2				05	↑: Positioning operation completed ↓ : When starting
Busy Flag						13	1: Busy
Output code						00 to 03	The output code (from 0 through F) set in the positioning sequence is output in hexadecimal.

Note 1. When positioning is executed with positions designated as absolute, a present position unknown error (error code 5040) will be generated if the origin has not been established.

2. If the software limit for axis parameters is disabled (CW limit equal to or less than CCW limit), and if the designation is made while the origin is established (No Origin Flag OFF), positioning will be carried out by a relative amount, even with absolute position data. (Present position is “0” at the time of designation.)

8-3 Operations With Memory Operation

The following positioning can be carried out according to the positioning sequence settings.

8-3-1 Starting Memory Operation

There are two ways of starting memory operation, as follows:

1. Turn the START Bit from OFF to ON (↑).
2. Turn the INDEPENDENT START Bit from OFF to ON (↑).

When Executed by START

Executes the same number position as the positioning sequence, according to the completion code in the positioning sequence.

When Executed by INDEPENDENT START

Does not comply with the completion code in the positioning sequence, but always works as a terminating completion. A bank end completion(completion code 3), however, still works as a bank end operation.

8-3-2 Memory Operation In Accordance With Positioning Sequences

Positioning with memory operation is controlled by data set for the positioning sequences.

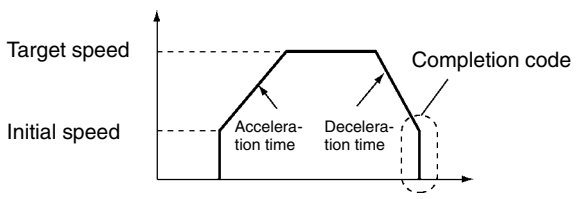

Terminating Completion (Code 0)

With terminating completion, positioning is executed using the position with the same number as this positioning sequence, followed by waiting for memory operation status. Then, when the next START or INDEPENDENT START command is received, the next positioning sequence (n+1) is executed.

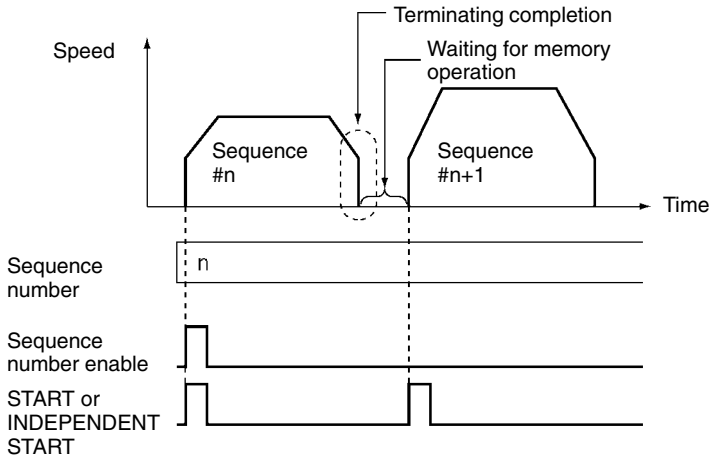

Automatic Completion (Code 1)

With automatic completion, the position with the same number as this positioning sequence is executed and positioning is paused for the duration of the dwell time. Then the position with the same number as the next (+1) positioning sequence is executed. Sequence #0 is executed after sequence #99.

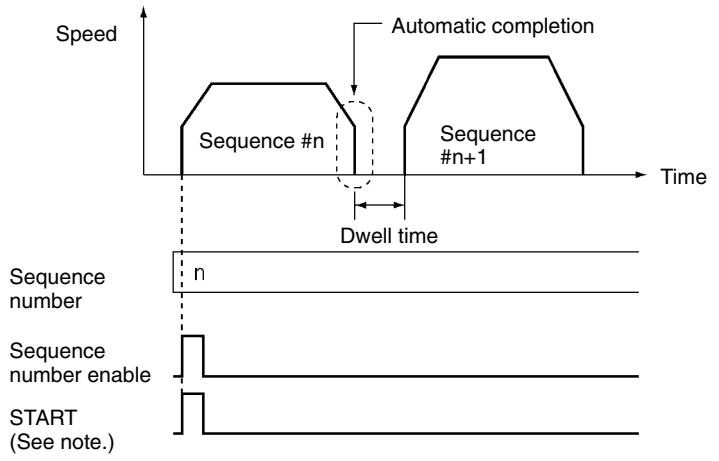

Note If INDEPENDENT START is executed, a terminating completion, and not an automatic completion, will result. If the dwell time is used here, a terminating completion will result at the completion of the dwell time.

Continuous Completion (Code 2)

With continuous completion, the position with the same number as this positioning sequence is executed. When the target position is reached, the target speed changes to the target speed for the next positioning sequence (n+1), and the position with the same number as that positioning sequence is executed. Sequence #0 is executed after sequence #99.

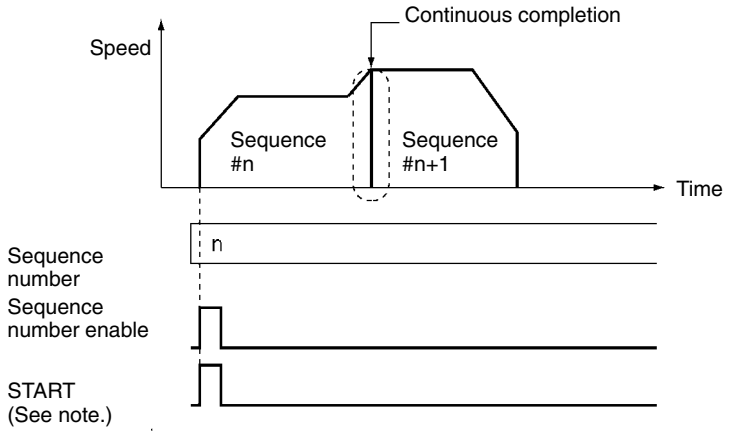

Note If INDEPENDENT START is executed, a terminating completion, and not a continuous completion, will result.

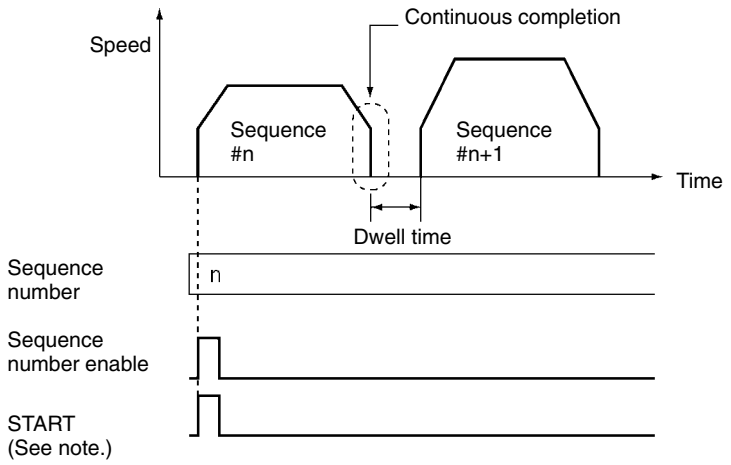

Note If a dwell time has been set, the position is executed and then there is a pause for the duration of the dwell time before the next positioning sequence (n+1) is executed.

Even if the completion code is continuous, operations can be executed in which the positioning direction is reversed. In that event, the positioning will be as follows regardless of the target speeds, absolute positions, or relative positions for the respective sequences.

Example

With sequence # n (continuous) and sequence # n+1 (bank end), there will be an immediate reversal when reversing from sequence # n to sequence # n+1, with no acceleration or deceleration.

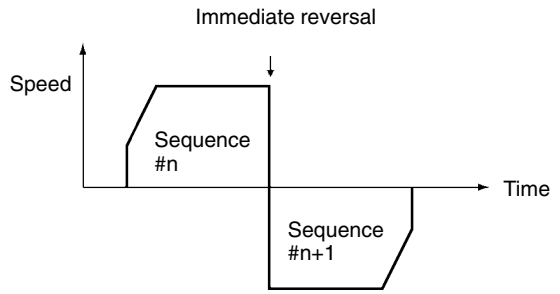

Bank End Completion (Code 3)

With bank end completion, the position with the same number as this positioning sequence is executed and then positioning is stopped. The next positioning sequence started is the one designated by the previous sequence number enable.

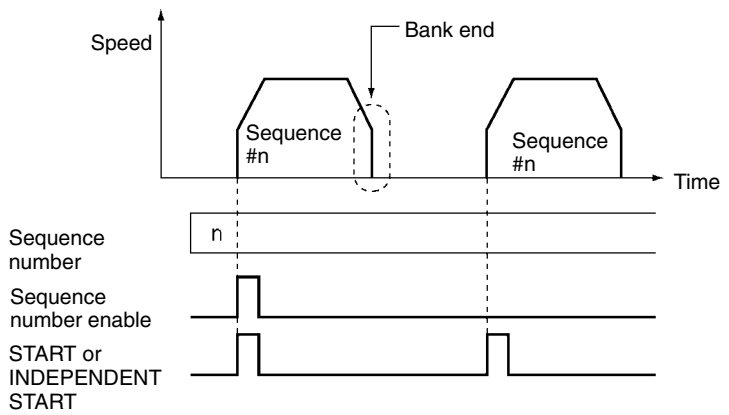

Speed Control Completion (Code 4)

With speed control completion, pulse output is supported at the target speed in this positioning sequence. The present position can be calculated even during continuous output. The direction of the pulse output is set by the sign for the position data of the same number. To stop this output, execute the STOP command.

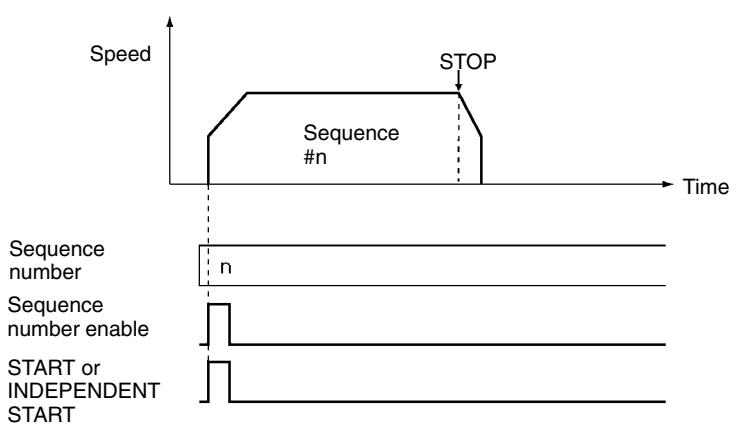

Interrupt Feeding Completion (Codes 5 and 6)

With interrupt feeding completion, pulse output is supported at the target speed in this positioning sequence. The present position can be calculated even during continuous output. The direction of the pulse output is set by the sign for the position data of the same number. When an interrupt signal is input, positioning is carried out according to the position data that is set. The positioning direction depends on the completion code. The next sequence (sequence number + 1) will be executed when the next START or INDEPENDENT START command is received.

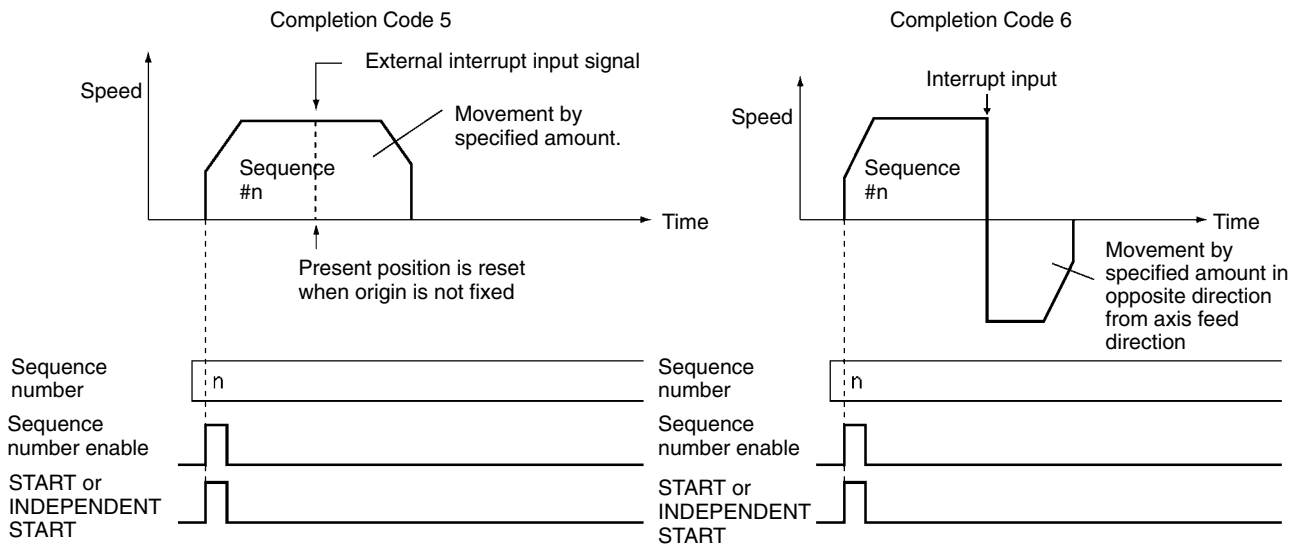

8-3-3 Linear Interpolation

Two or more axes can be designated for linear interpolation work. Use the axis designation in the positioning sequence to designate the axes for linear interpolation operations. The target speed set in the positioning sequence for the axes started at this time will become the interpolation speed.

For details regarding positioning sequence settings, refer to *4-6 Positioning Sequence Details*.

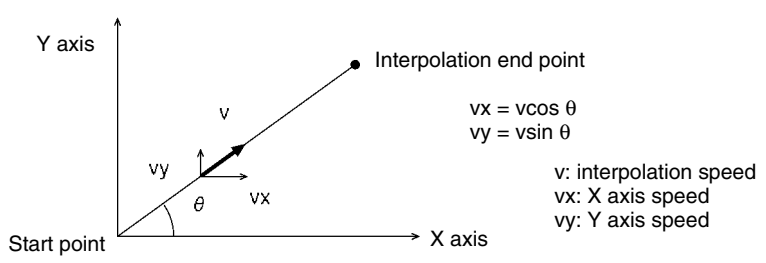

Note The speed set in the positioning sequence indicates the interpolation speed. When this speed is resolved into individual axis speeds (vx and vy in the above diagram) be sure the top speed set in the axis parameters is not exceeded.

8-3-4 Using Continuous Completion with Linear Interpolation

When an axis is started with linear interpolation with the completion code set to continuous (completion code 2), the following points need to be observed.

Axis Designation Precautions

When executing linear interpolation with the completion code set to continuous (completion code 2), the axis designation must match the following sequence.

If a positioning sequence different from the designated axis is executed continuously (completion code 2), it is possible that all axes with interpolation will temporarily stop at an intermediate point. The stop period will be approximately 8 ms. There will be no acceleration/deceleration when there is a temporary stop at the intermediate point.

Example:

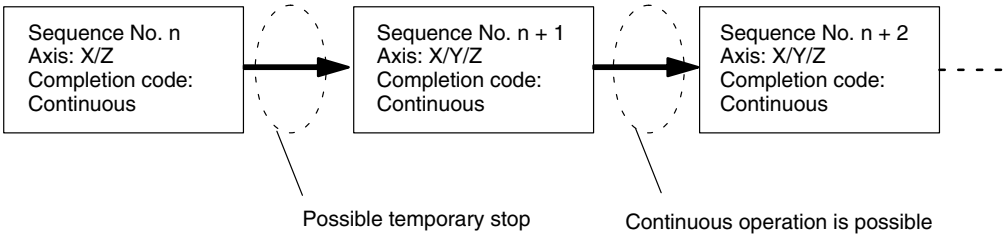

When Using a Stepping Motor

When using a stepping motor for continuous linear interpolation, use the automatic completion code (completion code 1). Interpolation is started with the target speed and acceleration/deceleration time of the active axis, so the pulses may suddenly become high or stop suddenly if the continuous completion code (completion code 2) is used. As a result, the motor may not be able to follow the variations in the pulses and may malfunction.

For example, suppose that a two-axis (axes X and Y) linear interpolation operation has been executed by starting the X axis. The movement on the Y axis from point A to point B will be 0.

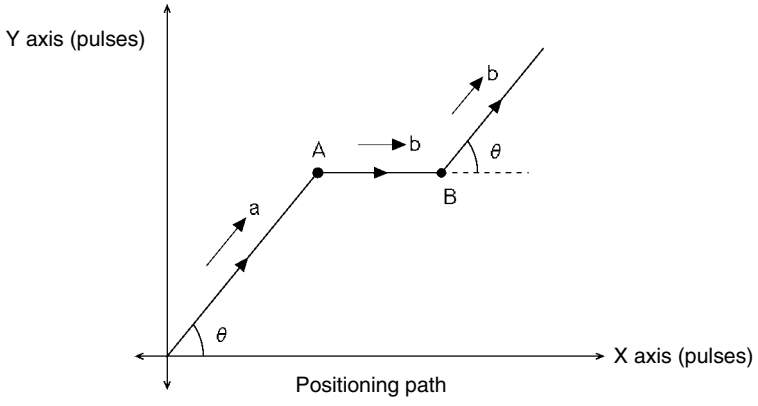

Now, suppose that the interpolation speed to point A is “a,” and the interpolation speed to point B and below is “b.” Then, when the completion code is continuous, the interpolation speed and the speeds of the X and Y axes are as shown below, with the pulses being output suddenly and stopped suddenly.

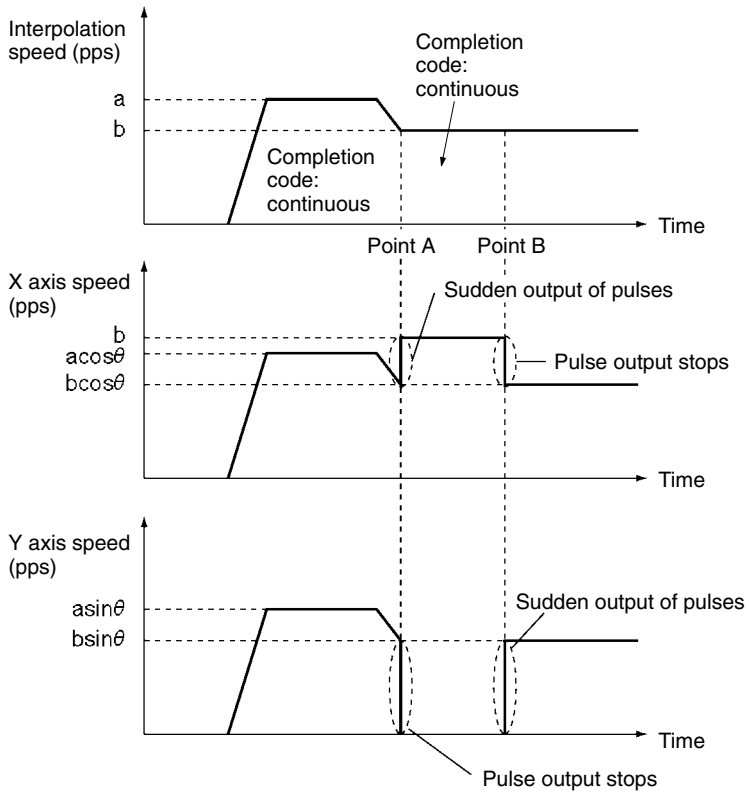

Reversal in Axis Operation

If an axis with interpolation reverses at the intermediate point when executing linear interpolation with the completion code set to continuous (completion code 2), all axes with interpolation will temporarily stop at the intermediate points. When reversing the operation direction of an axis, the same period of time will be taken for other axes with interpolation.

Acceleration/Deceleration will not occur for a temporary stop at intermediate points. When this operation is executed, therefore, set the completion code to automatic (completion code 1).

The following example shows the linear interpolation of the X and Y axes starting at the X axis. At point “A” the direction of movement at the Y axis is reversed.

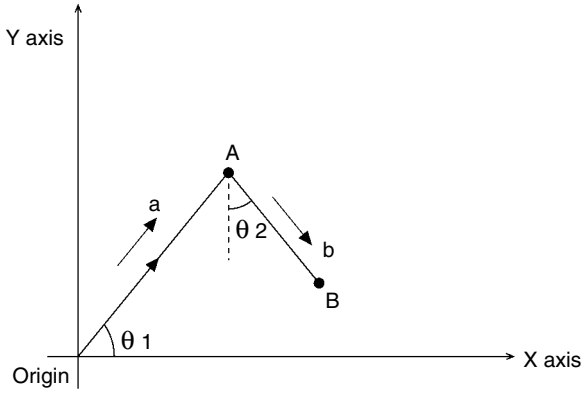

In this example the interpolation speed to point “A” is given as “a,” and the interpolation speed to point “B” is given as “b.” With a continuous completion code,

the pulse output temporarily stops at point “A” as shown below. The stop time is approximately 8 ms.

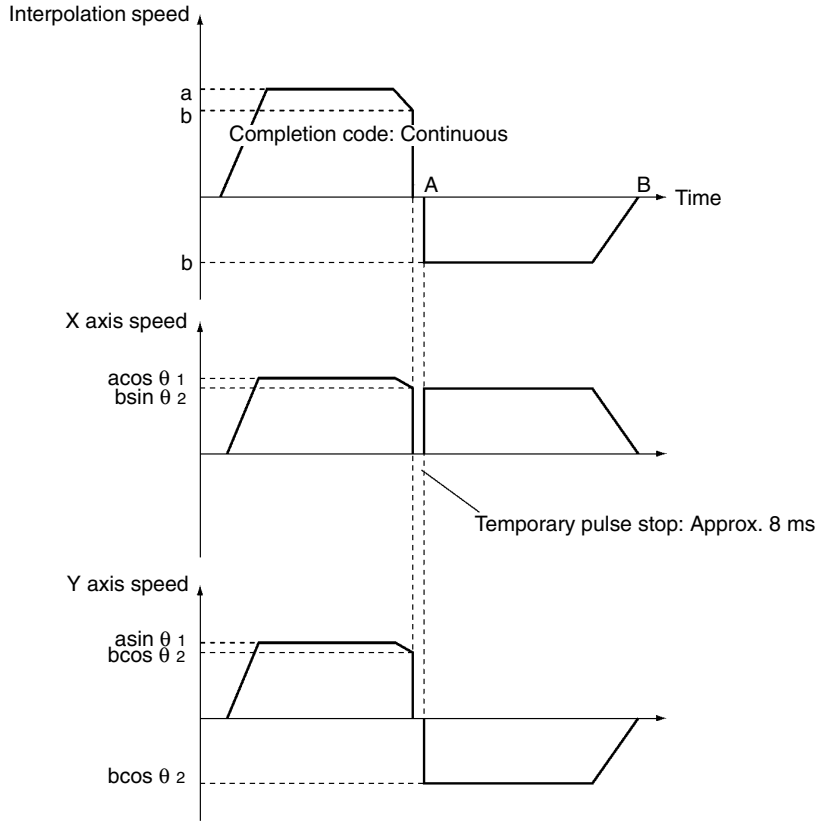

8-4 Procedures for Setting Data for Memory Operation

The procedures for setting data for memory operation are explained below using the X axis as an example.

1. Setting the common parameter area (Refer to *4-2 Common Parameter Area*.)
m: Determines whether DM or EM is made of the operating data area.
m+1: Sets the beginning word (I) of the operating data area.
m+2: Designates the mounting position and parameters.

2. Powering up again or re-starting
The data in the common parameter area set in (1) above is enabled.

3. Transferring the data (Refer to *Section 5 Transferring and Saving Data*.)
Transfer the data set for the common parameters and for the axes to the Position Control Unit.

4. Executing START
Set the sequence number for beginning operation (word n+1, bits 00 to 07).
Turn ON the Sequence Number Enable Bit (word n, bit 00).
Turn START (word n, bit 01) or INDEPENDENT START (word n, bit 02) from OFF to ON.

The operations in (1) and (2) above are required when using a Position Control Unit for the first time, or when modifying the data in the common parameter area.

8-5 Timing Chart for Memory Operation

This section provides timing charts showing START and INDEPENDENT START execution. The X axis is used as an example. It is first necessary to understand the functions of the Busy Flag and the Sequence Number Enable Bit.

Busy Flag

Turns ON while axes are outputting pulses. Turns OFF when execution is completed. No new start can be executed while the Busy Flag is ON.

Sequence Number Enable Bit

The Sequence Number Enable Bit is used when designating the sequence number for starting operation. Execution begins from the specified sequence number when START or INDEPENDENT START is turned ON after a sequence number has been designated and the Sequence Number Enable Bit turned ON.

In the following timing chart the completion codes for the positioning sequences are as follows, using the X axis as an example:

Sequence #10, Sequence #20: Continuous
Sequence #11, Sequence #21: Bank end

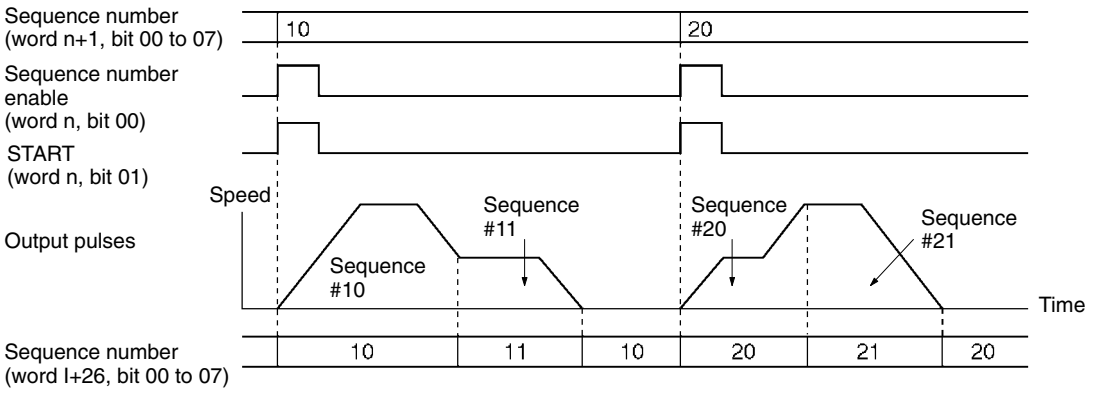

Timing Chart for INDEPENDENT START

INDEPENDENT START is used for stopping at each positioning sequence. An INDEPENDENT START operation is treated as a "terminating" positioning sequence, stopping after a single start regardless of the completion code. A bank end operation completion code, however, will still generate a bank end operation.

In the following timing chart the completion codes for the positioning sequences are as follows, using the X axis as an example:

Sequence #0, Sequence #10: Continuous
Sequence #1: Automatic
Sequence #11: Bank end

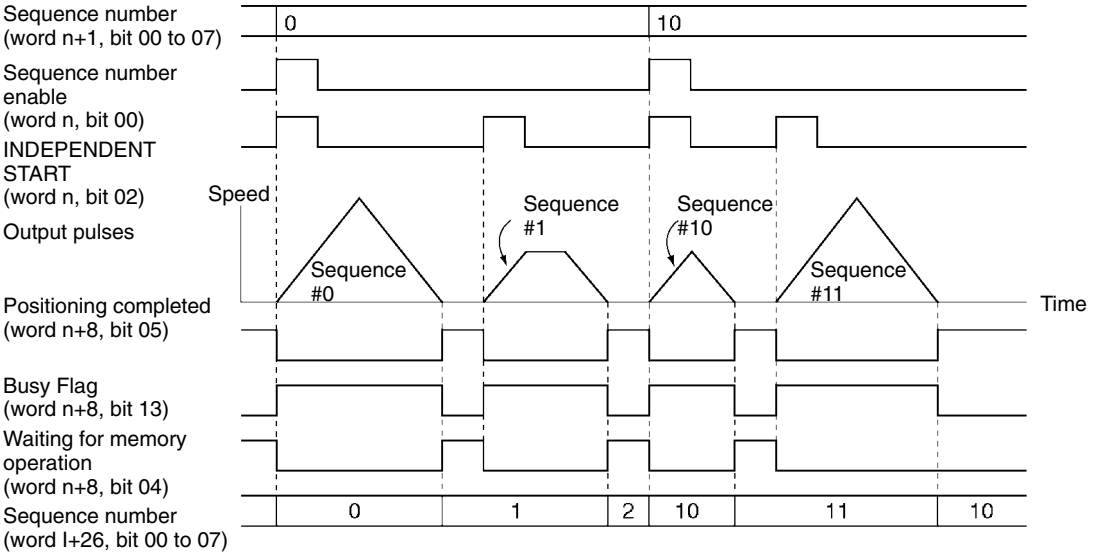

Note If the INDEPENDENT START Bit is turned from OFF to ON while the Sequence Number Enable Bit is OFF following a powerup or a restart, the sequence number error (error code 8101) will be generated.

When INDEPENDENT START is re-executed while the Sequence Number Enable Bit is OFF, the sequence numbers executed will be as follows:

Prior condition		INDEPENDENT START from OFF to ON when Sequence Number Enable is OFF
Start	**Completion code**	
Independent start	Terminating Continuous Automatic	Previously executed sequence number +1
	Bank end	Sequence number when previous Sequence Number Enable is ON.
Start	Terminating	Previously executed sequence number +1
	Continuous Automatic	Will not stop when completion code is continuous or automatic.
	Bank end	Sequence number when previous Sequence Number Enable is ON.
Deceleration stop Input CW/CCW limit.		Re-executes interrupted sequence number

Timing Chart for START

START begins execution from any sequence number in accordance with the completion code set for each positioning sequence. When a sequence number with its completion code set to terminating or bank end is executed, pulse output stops when positioning is completed, and then waits for START.

In the following timing chart the completion codes for the positioning sequences are as follows, using the X axis as an example:

Sequence #0, Sequence #3: Continuous
Sequence #1: Terminating
Sequence #2: Automatic
Sequence #4: Bank end

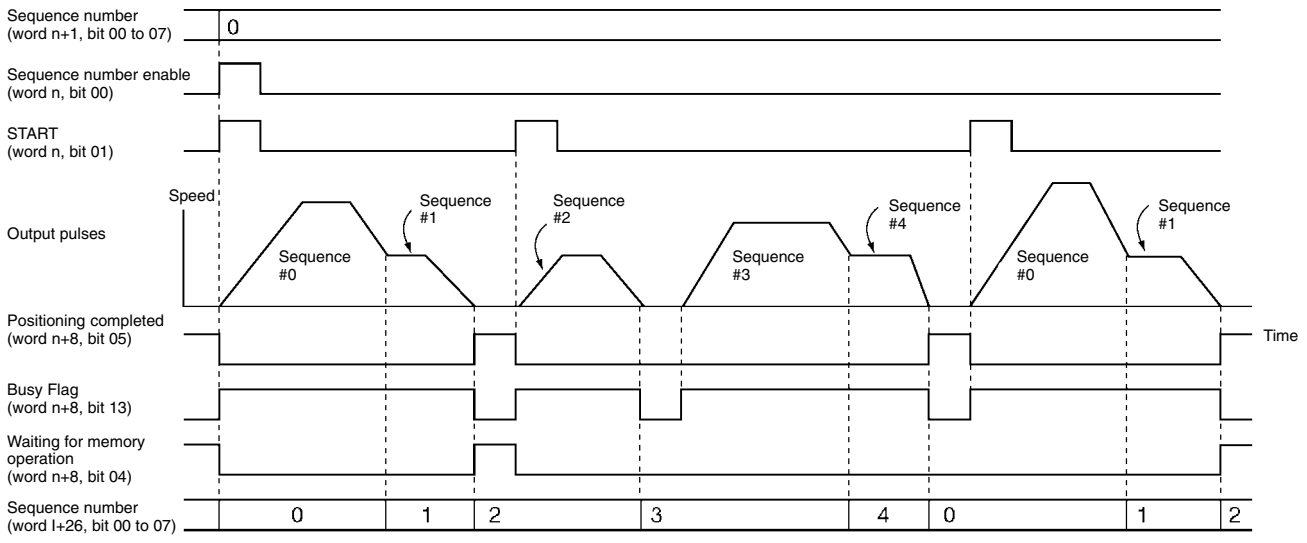

Note If START is turned from OFF to ON when the Sequence Number Enable Bit is OFF after a power-up or a restart, the sequence number error (error code 8101) will be generated.

When START is is re-executed while the Sequence Number Enable Bit is OFF, the sequence numbers executed will be the same as those for INDEPENDENT START.

8-6 Sample Program

This section provides a sample program for starting the X axis. The Position Control Unit used is a C200HW-NC113.

8-6-1 Operation

Positioning is executed as shown in the following diagram.

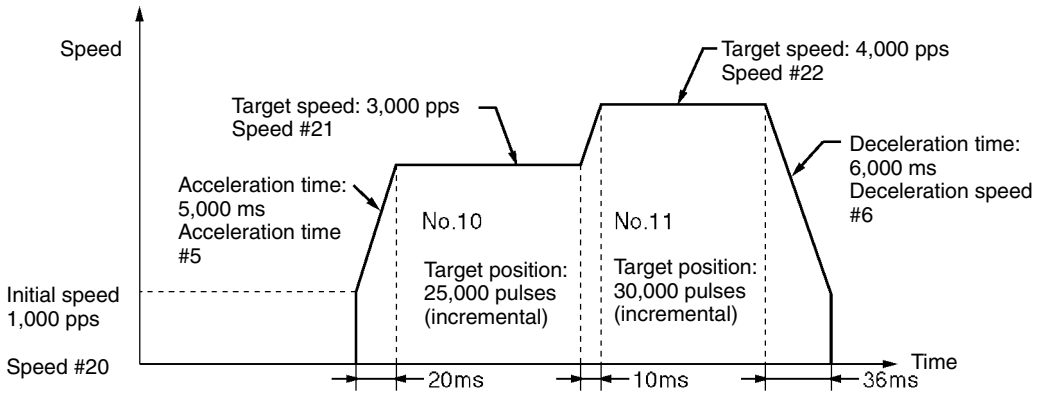

The values set for the acceleration and deceleration times and the actual acceleration and deceleration times are related to the values set for actual target speeds and the maximum speeds in the axis parameters area. For details, refer to *Appendix B Estimating Times and Pulses for Acceleration/Deceleration*.

Details of Positioning Sequences

Data	Settings	
	Sequence #10	Sequence #11
Position number	10	11
Axis designation	X axis	X axis
Output code	0	0
Completion code	Continuous	Bank end
Dwell time number	00	00
Acceleration time number	05	05
Deceleration time number	06	06
Initial speed number	20	20
Target speed number	21	22

8-6-2 Conditions and Details of Settings

The following table shows the settings under various conditions.

Item		Details
Unit number of PCU		Unit 1: Common parameter area: DM 1100 to DM 1102 Operating memory area: 110 to 114 (words) (The above areas are allocated automatically according to the unit number set.)
Common parameters	Designation of operating data area	DM 1100 | 0 | 0 | 0 | D | - - - - DM area
	Beginning word of operating data area	DM 1101 | 0 | 2 | 0 | 0 | - - - - DM 0200
	Unit mounting position and parameter designation	DM 1102 | 0 | 0 | 0 | 0 | - - - - CPU Backplane Use parameters saved in PCU.

8-6-3 Setting Data

Apart from the settings given below, the factory settings should be used. When settings other than the factory settings are used, operations may vary from those shown.

Refer to *Section 5 Transferring and Saving Data* for information on how to write data to the Position Control Unit.

Positioning Sequences

Data	Data configuration	Value set	Address
Sequence #10	15 12 11 08 07 04 03 00 Axis designation / Output code / 0 / Completion code Dwell time number / Acceleration time number / Deceleration time number Initial speed number / Target speed number	1002 0056 2021	1030 1031 1032
Sequence #11		1003 0056 2022	1033 1034 1035

Speeds

Data	Data configuration	Setting (pps)	Value set	Address
Speed data #20	15 14 13 12 00 $x10^3$ $x10^2$ $x10^1$ $x10^0$ Factor: 00: x 1, 01: x 10, 10: x 100, 11: x 1000 Setting range: 0 to 1,000,000 (pps)	1000	1000	1320
Speed data #21		3000	3000	1321
Speed data #22		4000	4400	1322

Positions

Data	Data configuration	Setting (pulse)	Value set	Address
Position #10	15 Leftmost 00 15 Rightmost 00 Sign $x10^6$ $x10^5$ $x10^4$ $x10^3$ $x10^2$ $x10^1$ $x10^0$ Sign: 0: + (absolute setting) 1: – (absolute setting) 2: + (incremental setting) 3: – (incremental setting) Setting range –9,999,999 to +9,999,999 pulses	Incremental 25000	5000 2002	1420 1421
Position #11		Incremental 30000	0000 2003	1422 1423

Acceleration/Deceleration Times

Data	Data configuration	Setting (ms)	Value set	Address
Acceleration time #5	15 Leftmost 00 15 Rightmost 00 0 0 $x10^5$ $x10^4$ $x10^3$ $x10^2$ $x10^1$ $x10^0$ Setting range: 0 to 250,000 (ms)	5000	5000 0000	1610 1611
Deceleration time #6		6000	6000 0000	1632 1633

8-6-4 Program Example

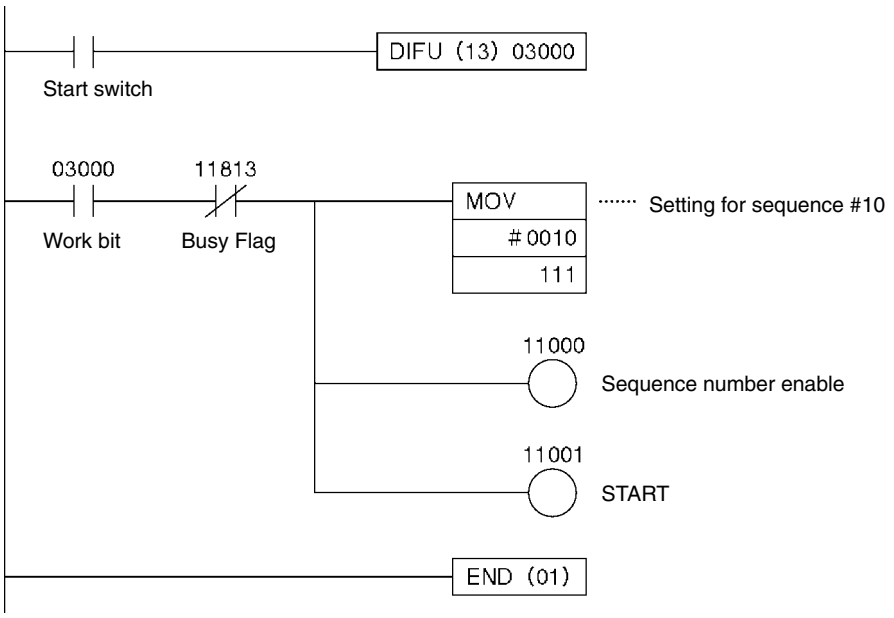

SECTION 9
Other Operations

This section describes the following operations: jogging, teaching, interrupt feeding, forced interrupt, deceleration stop, changing the present position, override, releasing pulse output prohibition, error counter reset output/origin-adjustment command output, and backlash compensation.

9-1 Jogging 170
9-1-1 Outline of Operation 170
9-1-2 Procedure for Executing JOG 170
9-1-3 Operating Memory Area Allocation and Operating Data Area Settings 170
9-1-4 Timing Chart 171
9-2 Teaching 171
9-2-1 Outline of Operation 171
9-2-2 Procedure for Teaching 171
9-2-3 Allocation of Operating Memory Area and Setting of Operating Data Area 172
9-2-4 Timing Chart 172
9-3 Interrupt Feeding 173
9-3-1 Outline of Operation 173
9-3-2 Procedure for Starting from Memory Operation 173
9-3-3 Procedures for Starting by Direct Operation 173
9-3-4 Operating Memory Area Allocation and Operating Data Area Settings 174
9-3-5 Timing Chart 175
9-4 Forced Interrupt 175
9-4-1 Timing Chart 176
9-5 Deceleration Stop 177
9-5-1 Outline of Operation 177
9-5-2 Operating Memory Area Allocation 177
9-5-3 Deceleration Stop During Positioning 177
9-5-4 Timing Chart 180
9-6 Changing the Present Position 180
9-6-1 Outline of Operation 180
9-6-2 Operating Memory Area Allocation and Operating Data Area Settings 180
9-6-3 Timing Chart 181
9-7 Override 181
9-7-1 Outline of Operation 181
9-7-2 Operating Memory Area Allocation and Operating Data Area Settings 181
9-7-3 Timing Chart 182
9-8 Releasing Pulse Output Prohibition 182
9-9 Error Counter Reset Output and Origin Adjustment Command Output 184
9-9-1 Outline of Operation 184
9-9-2 Operating Memory Area Allocation and External I/O Connector Pin Arrangement 185
9-9-3 Timing Chart 185
9-10 Backlash Compensation 187
9-10-1 Outline of Operation 187
9-10-2 Setting Axis Parameters 187
9-10-3 Backlash Compensation Operation 188
9-10-4 Backlash Compensation With Linear Interpolation 188

9-1 Jogging

This section describes the JOG operation and the data needed for performing it.

9-1-1 Outline of Operation

While JOG is on, axis operation is started using the designated direction, speed, and acceleration time. When it is turned OFF, positioning decelerates with the designated deceleration time and then stops. The JOG operation can be executed even when the origin has not been established.

9-1-2 Procedure for Executing JOG

1, 2, 3...

1. Set the speed and acceleration/deceleration time number in the operating data area.
2. Designate the start direction in the operating memory area.
3. Turn ON the JOG Bit. If the initial speed is set in the parameters, it will be in effect.

9-1-3 Operating Memory Area Allocation and Operating Data Area Settings

Operating Memory Area

Name	Model	Operating memory area				Bit	Details
		X axis	Y axis	Z axis	U axis		
JOG	NC413	n	n+2	n+4	n+6	09	1: Execute JOG; 0: Stop
Direction designation	NC213	n	n+2			10	1: CCW direction; 0: CW direction
	NC113	n					
Busy Flag	NC413	n+8	n+11	n+14	n+17	13	1: Busy
	NC213	n+4	n+7				
	NC113	n+2					

If the software limit has been disabled (CW limit equal to or less than CCW limit) by the axis parameters, even if JOG is executed with the origin established, the result will be the same as if the origin were not established. The present position becomes “0” when the JOG command is received.

Operating Data Area

Name	Model	Operating data area				Bit	Details
		X axis	Y axis	Z axis	U axis		
Speed	NC413	I+8	I+13	I+18	I+23	00 to 15	15 14 13 12 … 00 [ ][ ][x10^2][x10^1][x10^0] (Unit: pps) x10^3 Factor: 00: x 1, 01: x 10, 10: x 100, 11: x1,000
	NC213	I+8	I+13				
	NC113	I+8					
Acceleration time number	NC413	I+10	I+15	I+20	I+25	08 to 11	15 12 11 08 … 00 [ ][ ][0][0] Acceleration times #0 to #9 (BCD) Deceleration times #0 to #9 (BCD) When “0,” use parameter acceleration/deceleration time.
	NC213	I+10	I+15				
	NC113	I+10					
Deceleration time number						12 to 15	

If speed is changed during a JOG operation the operation will be carried out using the changed data. If the acceleration/deceleration time number is changed, the changes will be effective when the next START command is executed.

9-1-4 Timing Chart

The following is an example of a timing chart for a JOG operation on the X axis.

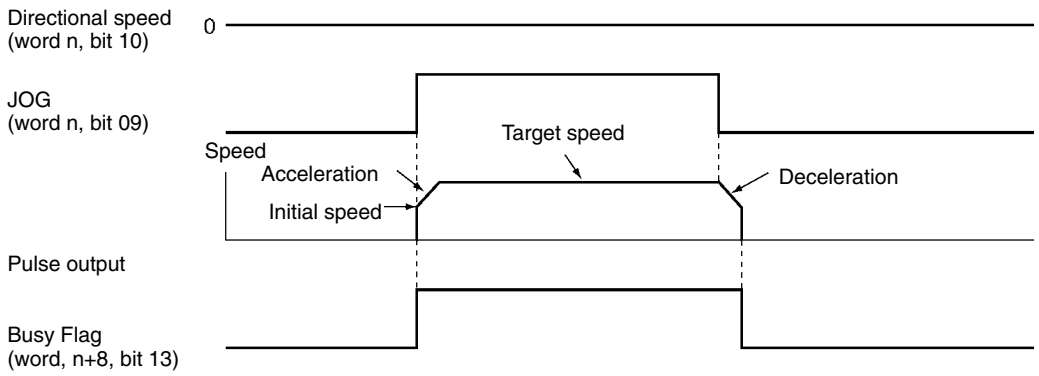

9-2 Teaching

This section describes the teaching operation and the data needed for performing it.

9-2-1 Outline of Operation

The present position is taken as the designated position number (teaching address). The position data is taken in when TEACH is turned ON.

Note Before executing TEACH, first establish the origin. If the origin is not first established, a present position unknown error (error code 5040) will be generated.

When TEACH is executed, values will be written in the position data area in the internal memory of the Unit. Since this data will be erased when the power is turned off or when the Unit is restarted, perform data saving operation to preserve the data. Refer to *5-7 Saving Data*.

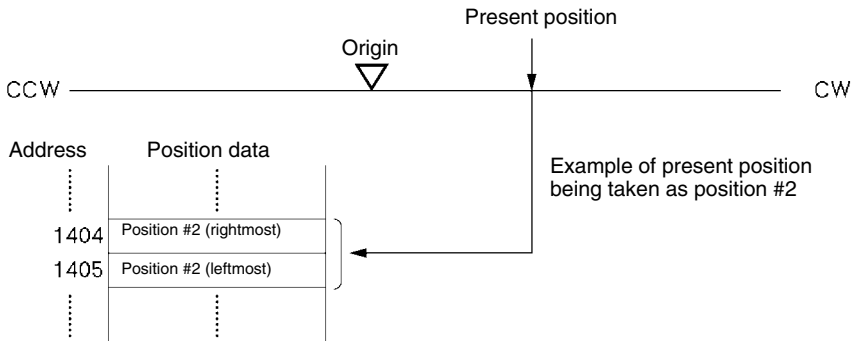

9-2-2 Procedure for Teaching

1, 2, 3...

1. Move axis to teaching position.
2. Set teaching address in operating data area.
3. Stop the axis, and then turn the TEACH Bit from OFF to ON.

9-2-3 Allocation of Operating Memory Area and Setting of Operating Data Area

Operating Memory Area

Name	Model	Operating memory area				Bit	Details
		X axis	Y axis	Z axis	U axis		
TEACH	NC413	n	n+2	n+4	n+6	11	↑ : Start of teaching
	NC213	n	n+2				
	NC113	n					
Teaching completed	NC413	n+8	n+11	n+14	n+17	11	↑ : Teaching completed ↓ : At start
	NC213	n+4	n+17				
Busy Flag	NC113	n+2				13	1: Busy

Operating Data Area

Name	Model	Operating memory area				Bit	Details
		X axis	Z axis	Y axis	U axis		
Teaching address	NC413	I+10	I+15	I+20	I+25	00 to 07	15 07 00 Teaching address Designate a position from #00 to #99 (BCD).
	NC213	I+10	I+15				
	NC113	I+10					

9-2-4 Timing Chart

The following timing chart shows an example of teaching on the X axis, taking the present position as position #2.

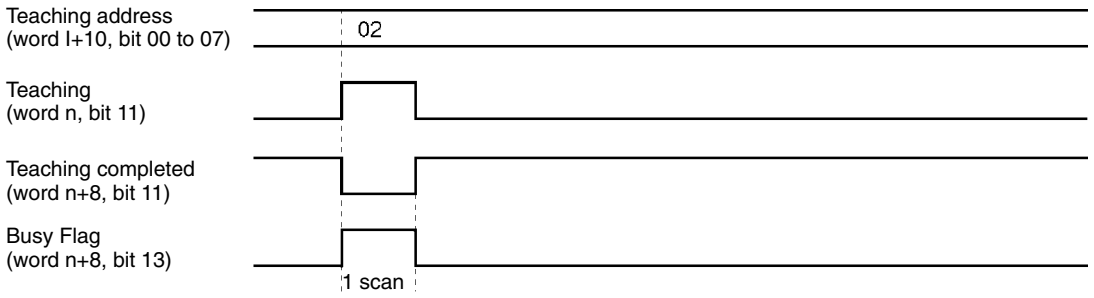

9-3 Interrupt Feeding

This section describes the interrupt feeding operation and the data needed for performing it.

9-3-1 Outline of Operation

Interrupt feeding is a positioning operation that moves the axis by a specified amount from the position at which the external interrupt signal (A19/B19) was input, either in the same direction as the direction of travel or in the opposite direction. It can be started from either from memory operation or from direct operation. The present position will be set to "0" if an interrupt input signal is input when the origin is not fixed.

Moving by a specified amount in the direction of travel

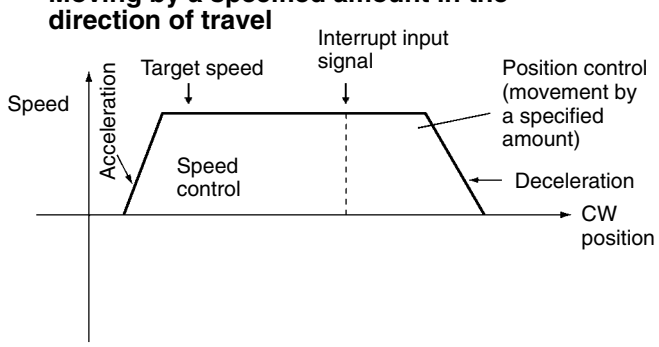

Moving by a specified amount in the opposite direction

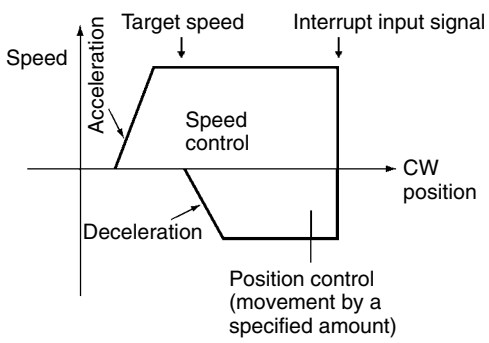

Note There will be no acceleration or deceleration if there is a reversal as a result of an interrupt input signal for a movement opposite to the direction of travel.

9-3-2 Procedure for Starting from Memory Operation

With memory operation, the positioning sequence completion code is set to interrupt feeding (5 or 6) and then this sequence number is started and the interrupt input signal is awaited.

1, 2, 3...

1. Set the positioning sequence completion code to 5 (interrupt feeding in direction of travel) or 6 (interrupt feeding in opposite direction) and write it to the Position Control Unit.
2. In the positioning sequence, set the speed data number and acceleration/deceleration time number, and set the amount of movement for the interrupt feeding in the position with the same number as the positioning sequence. The sign for the position will then become the pulse direction for speed control. The direction will become CW if it is positive and CCW if it is negative.
3. Execute START or INDEPENDENT START for the sequence number set in (1) above.
4. When an interrupt signal is input externally, interrupt feeding will be executed.

9-3-3 Procedures for Starting by Direct Operation

When the Interrupt Feeding Bit is turned ON, positioning is started with speed control and an interrupt input signal is awaited.

1, 2, 3...

1. Set the amount of interrupt feeding movement (position, speed, acceleration/deceleration time number) in the operating data area. The sign of the position at this point becomes the direction of travel after the input of the interrupt signal. "+" means interrupt feeding in the direction of travel, while "–" means interrupt feeding in the opposite direction.

2. Set the direction of the speed control with the direction designation, and then turn the Interrupt Feeding Bit from OFF to ON.
3. When the external interrupt signal is input, interrupt feeding will be executed.

9-3-4 Operating Memory Area Allocation and Operating Data Area Settings

For details regarding positioning sequences in memory operation, see *4-6 Positioning Sequence Details*. Refer to *Section 8 Memory Operation* for how to set and execute the operating data area and operating memory area when the program has been started from memory operation.

Operating Memory Area

Name	Model	Operating memory area				Bit	Details
		X axis	Y axis	Z axis	U axis		
Interrupt feeding	NC413	n	n+2	n+4	n+6	05	↑ : Start of interrupt feeding
	NC213	n	n+2				
Direction designation	NC113	n				11	1: CCW; 0: CW
Positioning Completed	NC413	n+8	n+11	n+14	n+17	05	↑ : Positioning Completed
	NC213	n+4	n+17				
Busy Flag	NC113	n+2				13	1: Busy

Operating Data Area

Name	Model	Operating data area				Bit	Details
		X axis	Y axis	Z axis	U axis		
Position	NC413	I+6 I+7	I+11 I+12	I+16 I+17	I+21 I+22	00 to 15	15 Leftmost 00 15 Rightmost 00 [ ][ ][x10⁶][x10⁵][x10⁴][x10³][x10²][x10¹][x10⁰] Sign: 0: Plus (CW) 1: Minus (CCW)
	NC213	I+6 I+7	I+11 I+12				
	NC113	I+6 I+7					
Speed	NC413	I+8	I+13	I+18	I+23	00 to 15	15 14 13 12 00 [ ][ ][x10²][x10¹][x10⁰] (Unit: pps) x10³ Factor: 00: x 1, 01: x 10, 10: x 100, 11: x1,000
	NC213	I+8	I+13				
	NC113	I+8					
Acceleration time number	NC413	I+10	I+15	I+20	I+25	08 to 11	15 12 11 08 00 [ ][ ][0][0] Acceleration times #0 to #9 (BCD) Deceleration times #0 to #9 (BCD) When "0," use parameter acceleration/deceleration time.
	NC213	I+10	I+15				
	NC113	I+10					
Deceleration time number						12 to 15	

9-3-5 Timing Chart

The following timing chart illustrates interrupt feeding under direct operation, using the X axis as an example. There is a movement of 10,000 pulses in the direction of travel.

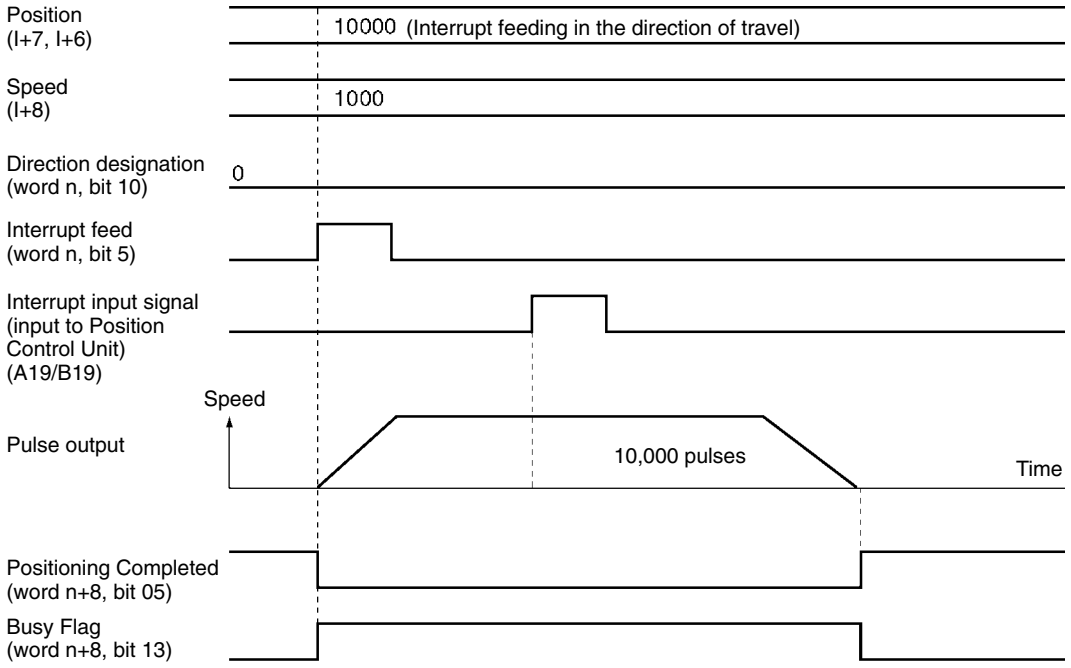

9-4 Forced Interrupt

FORCED INTERRUPT is a command which is only enabled during memory operation. It is used for taking emergency evasive action from the current operation under memory operation.

Outline of Operation

When a sequence number with the forced interrupt operation set is specified and the FORCED INTERRUPT Bit is turned ON, the pulse output of the memory operation currently being executed is stopped (without deceleration) and positioning is executed from the specified sequence number. There is no need to turn ON the Sequence Number Enable Bit.

Procedure for Using Forced Interrupt

1, 2, 3...

1. Set the forced interrupt action in the positioning sequence and transfer it to the Position Control Unit.
2. When a forced interrupt is required, specify the sequence number set in (1) and FORCED INTERRUPT from OFF to ON.

Operating Memory Area Allocation

Refer to *4-6 Positioning Sequence Details* for information about positioning sequences under memory operation.

Name	Model	Operating memory area				Bit	Details
		X axis	Y axis	Z axis	U axis		
Sequence number	NC413	n+1	n+3	n+5	n+7	00 to 07	15 07 00 Sequence number Set the beginning sequence number for forced interrupt from 00 through 99 (BCD).
	NC213	n+1	n+3				
	NC113	n+1					
FORCED INTERRUPT						08	↑ : FORCED INTERRUPT execution
Busy Flag	NC413	n+8	n+11	n+14	n+17	13	1: Busy
	NC213	n+4	n+7				
	NC113	n+2					

9-4-1 Timing Chart

In the following timing chart, the completion codes for the various positioning sequence are as shown below, using the X axis as an example.

Sequence #10 and Sequence #20: Continuous
Sequence #11 and Sequence #21: Bank end
The example shows how to execute a forced interrupt for sequence #20 while sequences #10 to #11 are being executed.

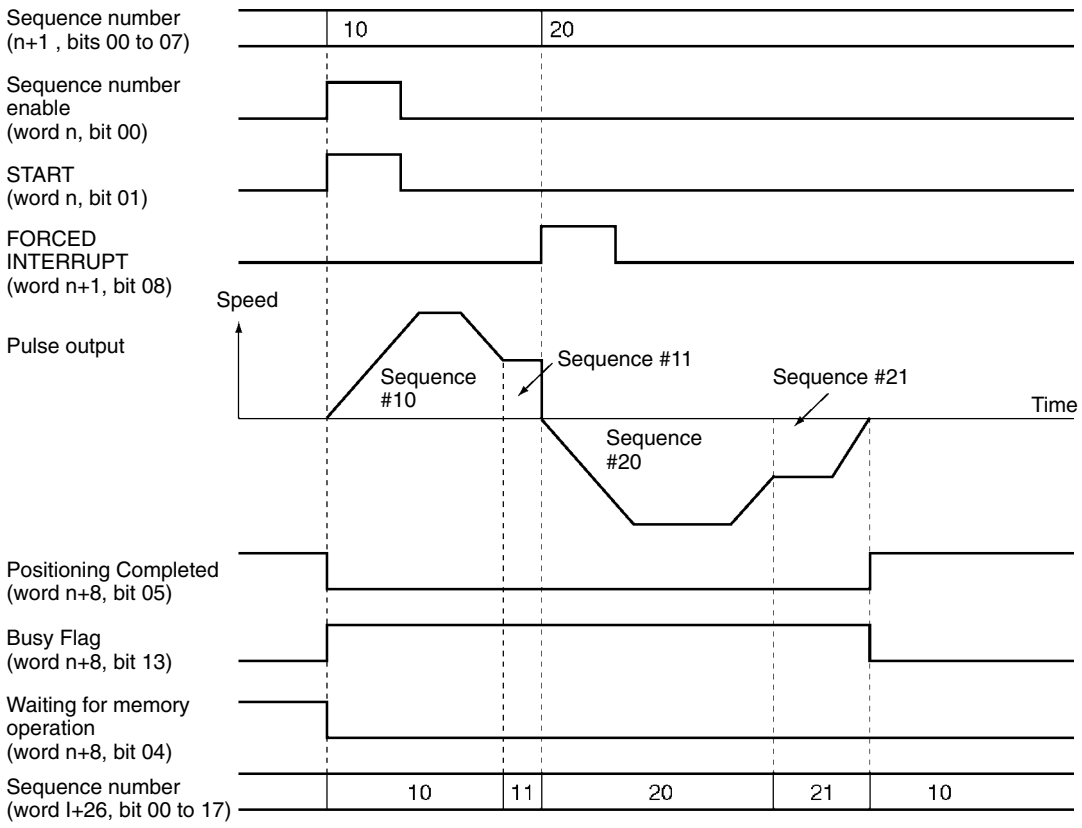

9-5 Deceleration Stop

The STOP command brings an active axis to a decelerated stop.

9-5-1 Outline of Operation

The deceleration stop operation is executed when the STOP Bit is turned ON. When a deceleration stop is executed during memory operation, the stop occurs with the deceleration time set for the positioning sequence.

9-5-2 Operating Memory Area Allocation

Name	Model	Operating memory area				Bit	Details
		X axis	Y axis	Z axis	U axis		
STOP	NC413	n	n+2	n+4	n+6	15	↑ : Starting decelerated stop
	NC213	n	n+2				
	NC113	n					
Deceleration stop execution	NC413	n+8	n+11	n+14	n+17	15	↑ : STOP completed ↓ : When operation starts
	NC213	n+4	n+17				
	NC113	n+2					
Busy Flag						13	1: Busy

9-5-3 Deceleration Stop During Positioning

Deceleration Stop During Positioning with Absolute Positions

When a deceleration stop has occurred before the target position has been reached, the positioning can be resumed by executing START.

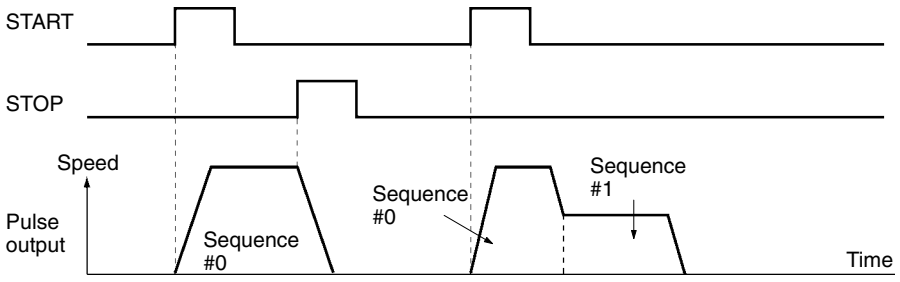

If the completion code of the stopped positioning action is anything other than continuous, when a deceleration stop occurs after the target position has been passed it is possible to resume positioning by executing START.

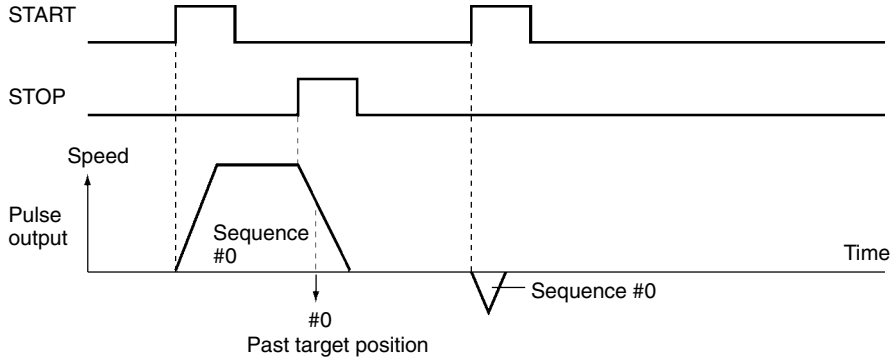

If the completion code is continuous, positioning returns to the target position of sequence #0 and an immediate reversal is executed without deceleration. Then positioning is executed for sequence #1.

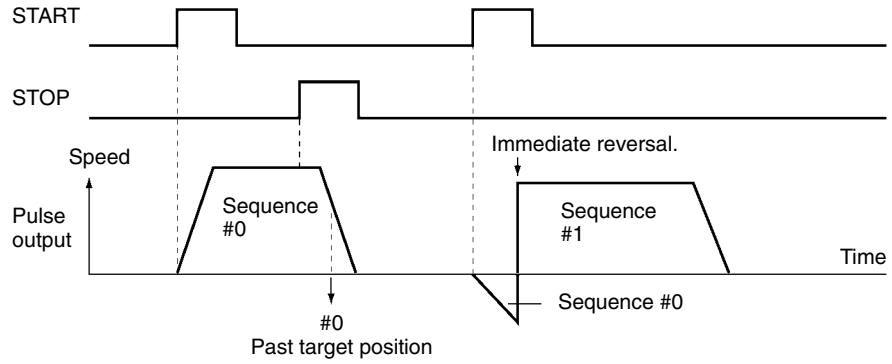

Deceleration Stop During Positioning with Incremental Positions

When positioning is stopped by a deceleration stop, the sequence that was stopped is re-executed by starting positioning again.

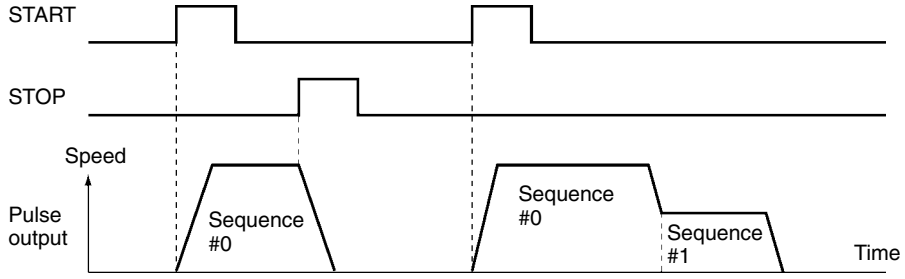

Deceleration Stop with Linear Interpolation

A deceleration stop with linear interpolation is executed by the Deceleration Stop Bit of the axis where the Memory Operation Start Bit is turned ON. Actual deceleration starts when the Deceleration Stop Execution Bit is turned ON. The Deceleration Stop Bits of other axes become disabled and their Deceleration Stop Execution Bits remain unchanged.

For example, when executing linear interpolation for X-axis data with the X and Y axes, deceleration stop can only be executed by the Deceleration Stop Bit of the X axis. When deceleration stop is executed during interpolation operation, both the X and Y axes stop from deceleration.

When positioning is restarted, the target position will vary, as shown below, according to whether the positions for each active axis are incremental or absolute. In this example, linear interpolation is executed for the X and Y axes.

When X Axis Position is Incremental and Y Axis is Absolute

When positioning is stopped by a deceleration stop, the sequence that was stopped can be re-executed by restarting X-axis positioning. Positioning will be resumed for the Y axis.

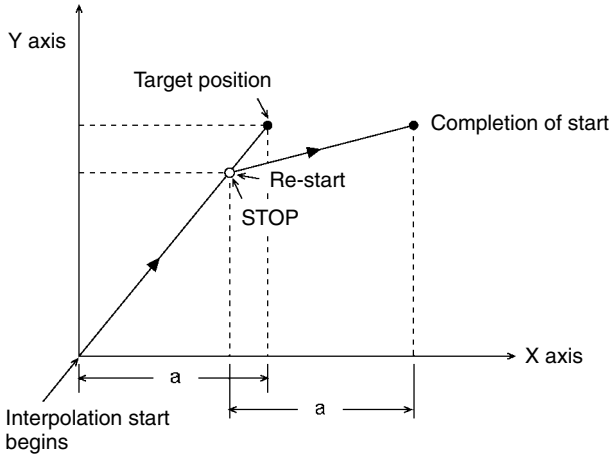

When the X axis position is absolute and the Y axis position is incremental, the X axis and Y axis operate in the opposite way from that illustrated above.

When the X Axis and Y Axis Positions are Both Absolute

When a decelerated stop is executed before the target position has been reached, positioning is resumed for both axes by restarting.

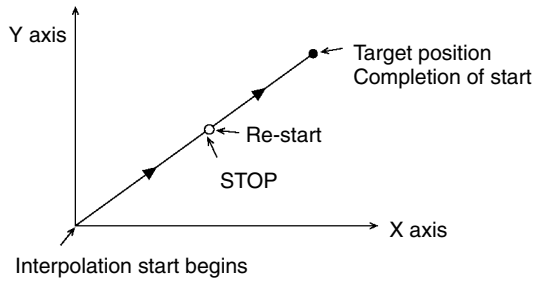

For details regarding operation when the target position has been passed for an axis with an absolute position, refer to *Deceleration Stop During Positioning with Absolute Positions* on page 177.

When the X Axis and Y Axis Positions are Both Incremental

When positioning is stopped by a deceleration stop, the stopped sequences for both axes are re-executed by restarting positioning.

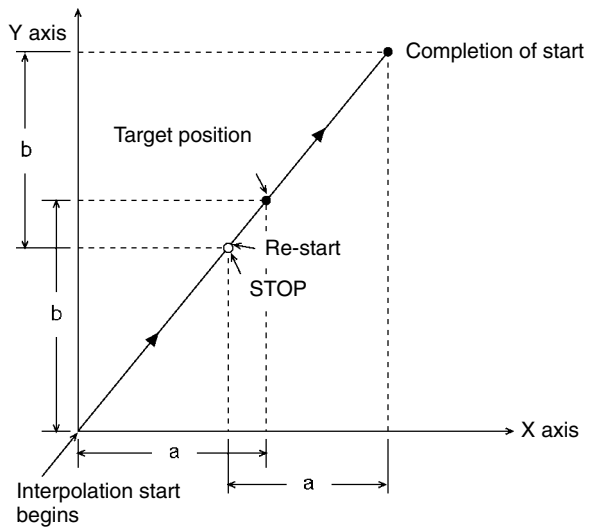

9-5-4 Timing Chart

In the following timing chart, X-axis positioning for an ABSOLUTE MOVEMENT command is stopped by a deceleration stop.

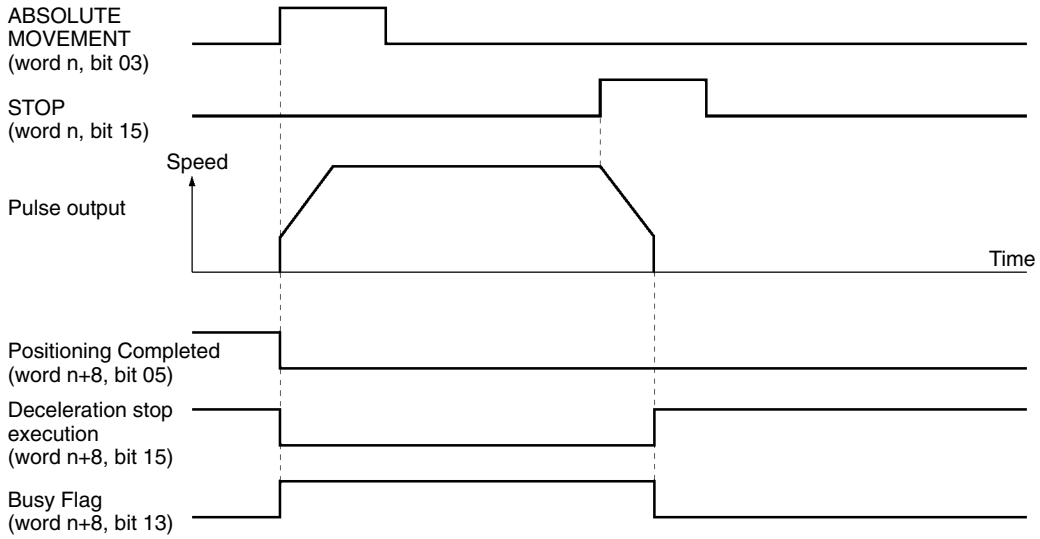

9-6 Changing the Present Position

PRESENT POSITION CHANGE changes the present position to any value.

9-6-1 Outline of Operation

When the PRESENT POSITION CHANGE Bit is turned ON, the present position is changed to the value set in the operating memory area, and then the origin is established. If it is changed to “0,” then that position will become the origin.

9-6-2 Operating Memory Area Allocation and Operating Data Area Settings

Operating Memory Area

Name	Model	Operating memory area				Bit	Details
		X axis	Y axis	Z axis	U axis		
PRESENT POSITION CHANGE	NC413	n	n+2	n+4	n+6	08	↑ : Beginning of present position change
	NC213	n	n+2				
	NC113	n					
No Origin Flag	NC413	n+8	n+11	n+14	n+17	06	1: No origin 0: Origin established
	NC213	n+4	n+17				
Busy Flag	NC113	n+2				13	1: Busy

Operating Data Area

Name	Model	Operating data area				Data configuration
		X axis	Y axis	Z axis	U axis	
Position designation	NC413	I+6 I+7	I+11 I+12	I+16 I+17	I+21 I+22	15 Leftmost 00 15 Rightmost 00 [ ] [x10⁶] [x10⁵] [x10⁴] [x10³] [x10²] [x10¹] [x10⁰] Sign: 0: Plus (CW) 1: Minus (CCW)
	NC213	I+6 I+7	I+11 I+12			
	NC113	I+6 I+7				

9-6-3 Timing Chart

In the following timing chart, the X-axis present position is changed to “0.” When the present position is changed to “0” it becomes the origin, so the Origin Stop Flag is turned ON.

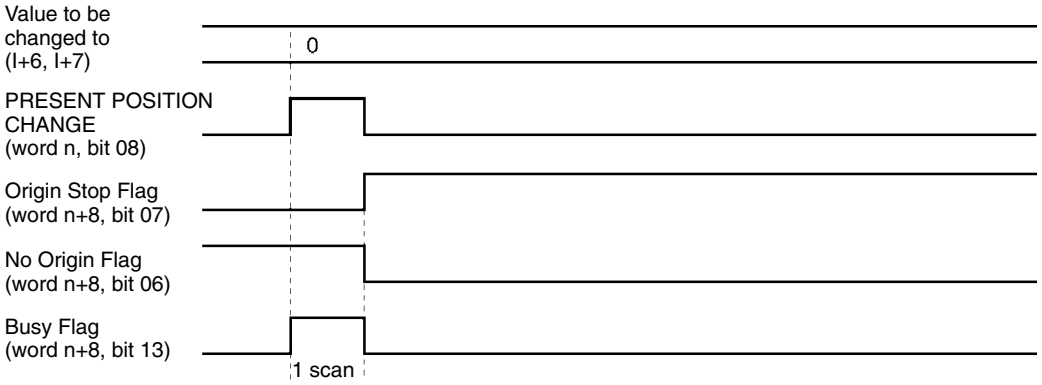

9-7 Override

The override operation is used for changing the speed of an active axis.

9-7-1 Outline of Operation

While the Override Enable Bit is ON, the target speed is changed by applying the override value that is set in the operating data area. The override can be set from 0 to 999%. The target speeds for memory operation, direct operation, jogging, and so on, are set to 100%.

Target speed = Designated speed x Override/100

Override is not enabled for pulse output during origin search. It is enabled, however, for the pulse output for the amount of compensation when origin compensation is used.

Note A 0% override cannot be specified. If 0% is specified, an override error (error code 8500) is generated when override is enabled.

9-7-2 Operating Memory Area Allocation and Operating Data Area Settings

Operating Memory Area

Name	Model	Operating memory area				Bit	Details
		X axis	Y axis	Z axis	U axis		
Override enable	NC413	n	n+2	n+4	n+6	14	1: Enable; 0: Disable
	NC213	n	n+2				
	NC113	n					

Operating Data Area

Name	Model	Operating data area				Data configuration
		X axis	Y axis	Z axis	U axis	
Speed designation	NC413	I+8	I+13	I+18	I+23	15 14 13 12 … 00 [ ][ ][ ] $x10^2$ $x10^1$ $x10^0$ (Unit: pps) $x10^3$ Factor: 00: x 1, 01: x 10, 10: x 100, 11: x1,000
	NC213	I+8	I+13			
	NC113	I+8				
Override	NC413	I+9	I+14	I+19	I+24	15 … 00 $x10^3$ $x10^2$ $x10^1$ $x10^0$ Set override from 0001 to 0999 (BCD).
	NC213	I+9	I+14			
	NC113	I+9				

9-7-3 Timing Chart

In the following timing chart, the target speed is changed by the override while jogging the X axis.

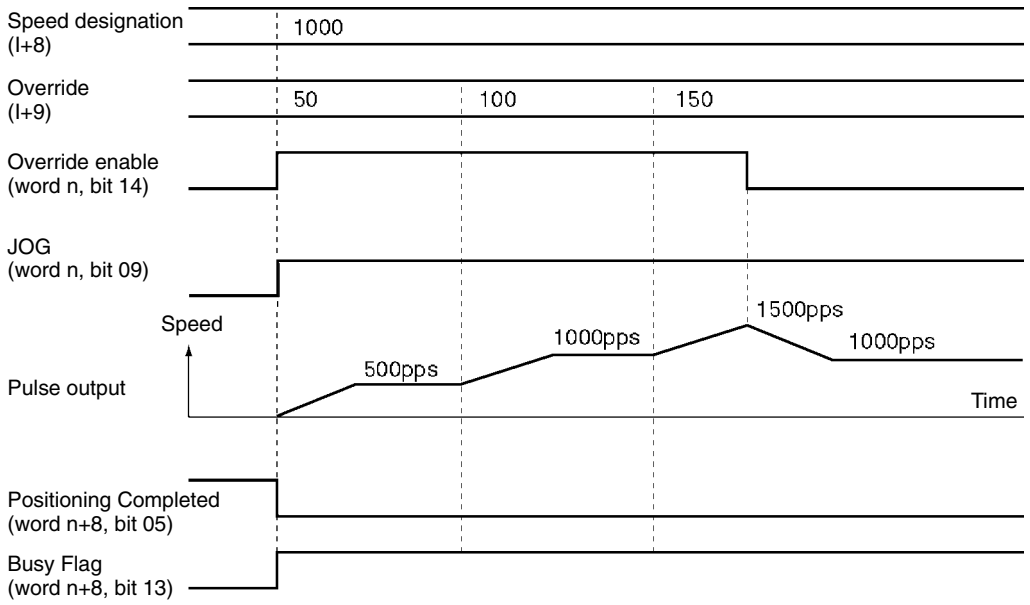

9-8 Releasing Pulse Output Prohibition

Outline of Operation

When the following inputs are turned on at the Position Control Unit, the pulse output is interrupted and and further pulses are not output.

- Emergency stop input signal
- CW limit input signal
- CCW limit input signal

Pulse output can be resumed by turning OFF the emergency stop input signal and then turning ON the RELEASE PROHIBIT Bit.

For the CW and CCW limit input signals, pulses can be output in the reverse direction even if the limit input signal remains ON by turning ON the RELEASE PROHIBIT Bit. Pulse outputs will be enabled on the rising edge of the RELEASE PROHIBIT Bit.

In addition, for any of these inputs, the user can specify with a parameter setting whether or not the existing origin determination is to be released when the input turns ON. If the origin determination is released when the input turns ON, then the No Origin Flag will turn ON.

Operating Memory Area Allocation

Name	Model	Operating memory area				Bit	Details
		X axis	Y axis	Z axis	U axis		
RELEASE PROHIBIT	NC413	n	n+2	n+4	n+6	12	↑ : RELEASE PROHIBIT execution
	NC213	n	n+2				
	NC113	n					
No Origin Flag	NC413	n+8	n+11	n+14	n+17	06	1: Origin established 0: Origin not established
	NC213	n+4	n+17				
Busy Flag	NC113	n+2				13	1: Busy

Timing Chart

In the following timing chart, an emergency stop input signal is turned ON during an ABSOLUTE MOVEMENT command for the X axis. In this example, it is assumed that the parameter has been set so that the origin determination will be released when the input turns ON.

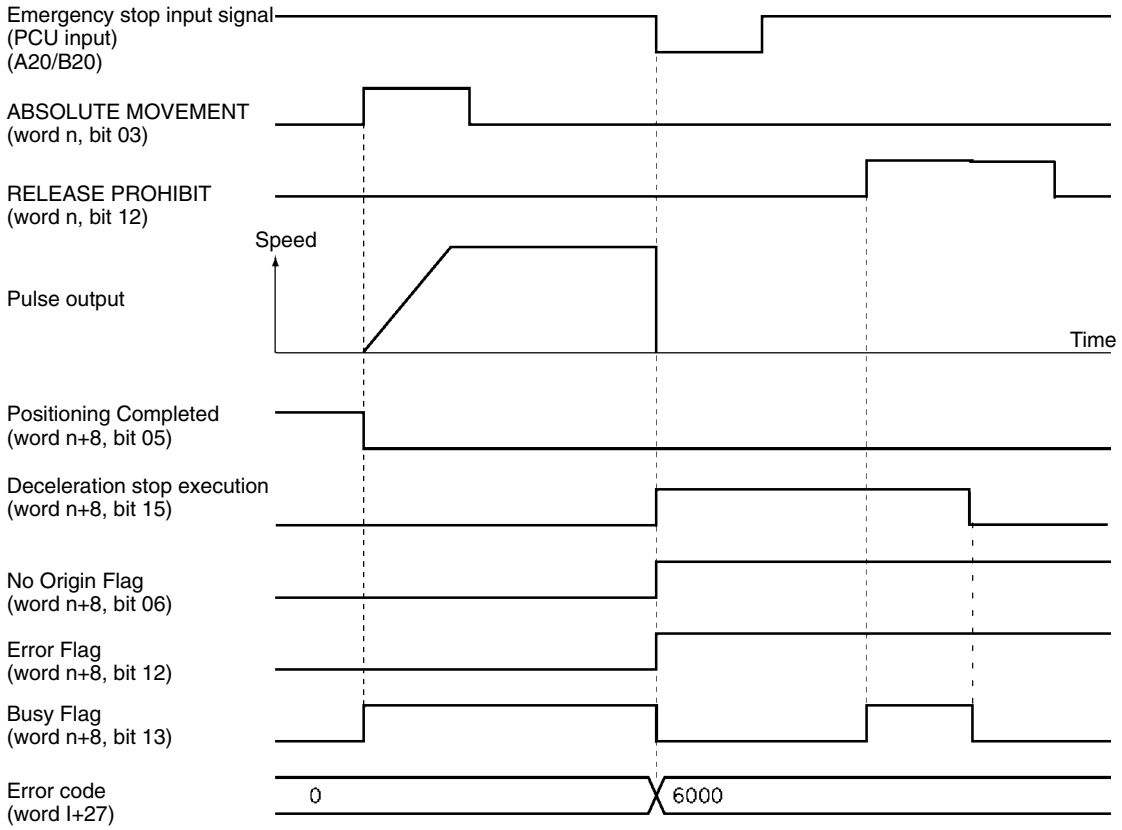

9-9 Error Counter Reset Output and Origin Adjustment Command Output

9-9-1 Outline of Operation

Error counter reset output and origin adjustment command output are used as the following kinds of signals, depending on the operation mode, and they control the ON/OFF status of the external I/O connectors A10/A11 and B10/B11.

- General purpose output (mode 0)
- Error counter reset output (modes 1 and 2)
- Origin adjustment command output (mode 3)

Operation mode	Explanation
0	Can be used as general purpose output. This bit's ON/OFF status can be output to external I/O connector (A10/A11 and B10/B11) just as it is. This bit can be always ON or OFF regardless of the Unit's status.
1, 2	Used as error counter output. External I/O connectors A10/A11 and B10/B11 are connected to Servomotor Driver's error counter reset. For origin search, the error counter reset output (A10/A11, B10/B11) is automatically output for approximately 20 ms upon completion. When this bit is turned ON, the error counter reset signal is output. The following processing is executed: 1) Pulse output is stopped. 2) The origin determination is released. 3) The error counter reset outputs (A10/A11, B10/B11) are output (OFF). While this bit is ON, if such operations as direct operation, memory operation, origin search, or jogging are executed, an error counter reset or origin adjustment command output error (error code 8400) will be generated. Make sure this bit is OFF before executing the operation. Do not turn this bit ON during an origin search. If it is turned ON during an origin search (while busy), an error counter reset or origin adjustment command output error (error code 8400) will be generated.
3	Used for wiring check and output of origin adjustment command signal. Connects external I/O connectors (A10/A11, B10/B11) to the origin adjustment command (H-RES) of an OMRON Servomotor Driver such as the R88D-H/M. When this bit is turned ON, the output of the origin adjustment command (A10/A11 and B10/B11) is output (ON). The bit can only be turned ON while pulse outputs are stopped. If it is turned ON during pulse output, an error counter reset or origin adjustment command output error (error code 8400) will be generated.

9-9-2 Operating Memory Area Allocation and External I/O Connector Pin Arrangement

Operating Memory Area

Name	Model	Operating memory area				Bit	Details
		X axis	Y axis	Z axis	U axis		
Error counter reset output and origin adjustment command output	NC413	n	n+2	n+4	n+6	13	1: ON; 0: OFF
	NC213	n	n+2				
	NC113	n					
Busy Flag	NC413	n+8	n+11	n+14	n+17	13	1: Busy
	NC213	n+4	n+17				
	NC113	n+2					

Pin Arrangement

Pin number	Name
A10 (X/Z axis)/B10 (Y/U axis)	Error counter reset output or origin adjustment command output (24 v)
A11 (X/Z axis)/B11 (Y/U axis)	Error counter reset output or origin adjustment command output (5 v)

9-9-3 Timing Chart

In the following timing chart, operation modes 0 to 2 are used, with the X axis taken as an example.

Example 1: Used as general outputs in mode 0

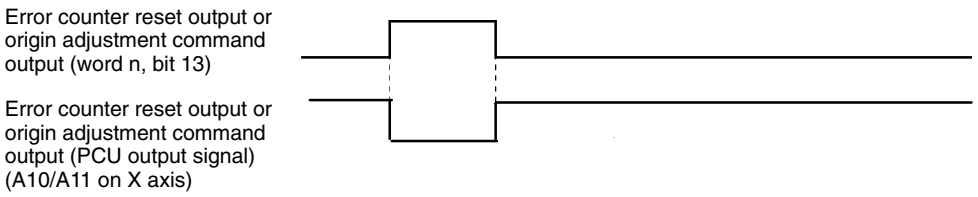

Example 2; Error counter reset output turned ON during an ABSOLUTE MOVEMENT command in operation mode 1

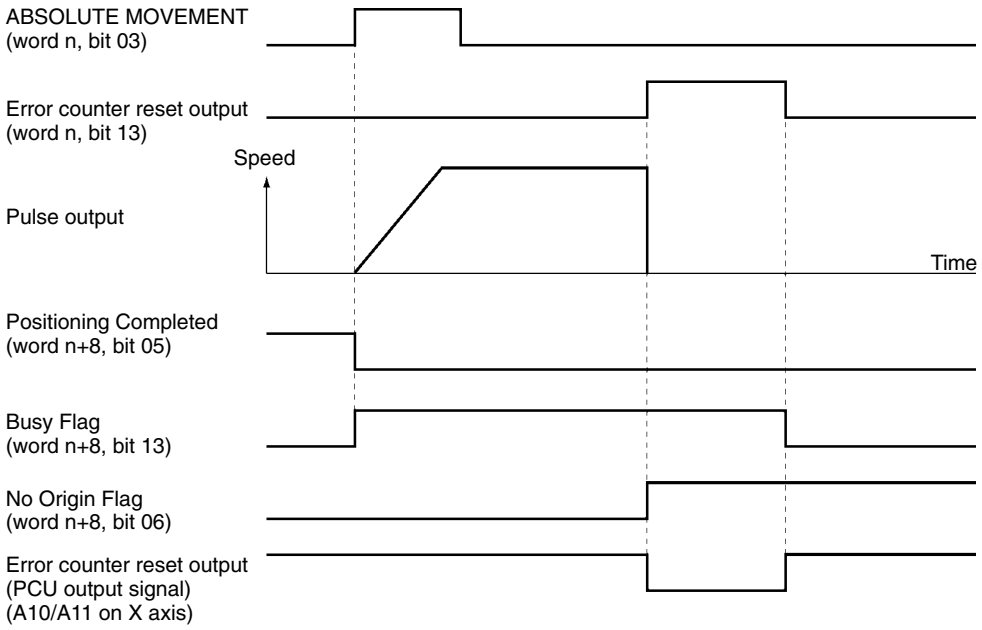

Example 3: Error counter reset output turned ON during memory operation in mode 2

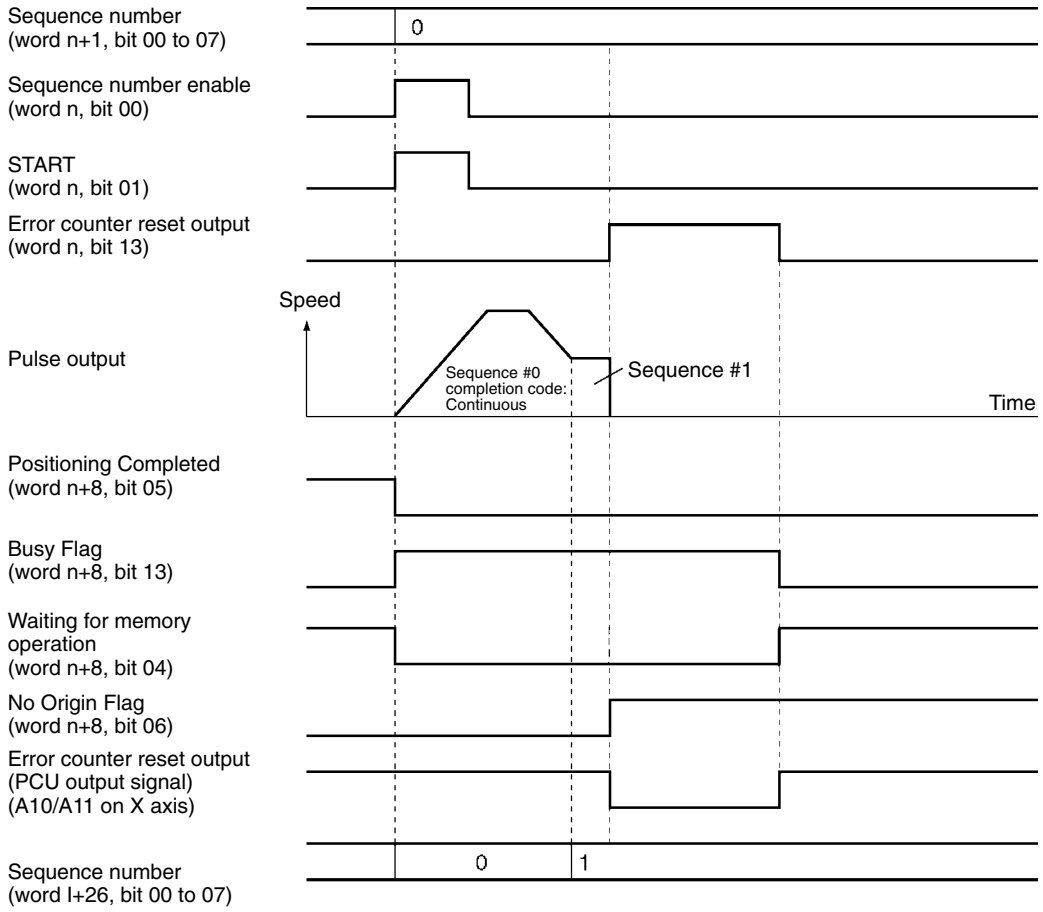

Example 4: Origin adjustment command output turned ON in operating mode 3 (only while pulses stopped)

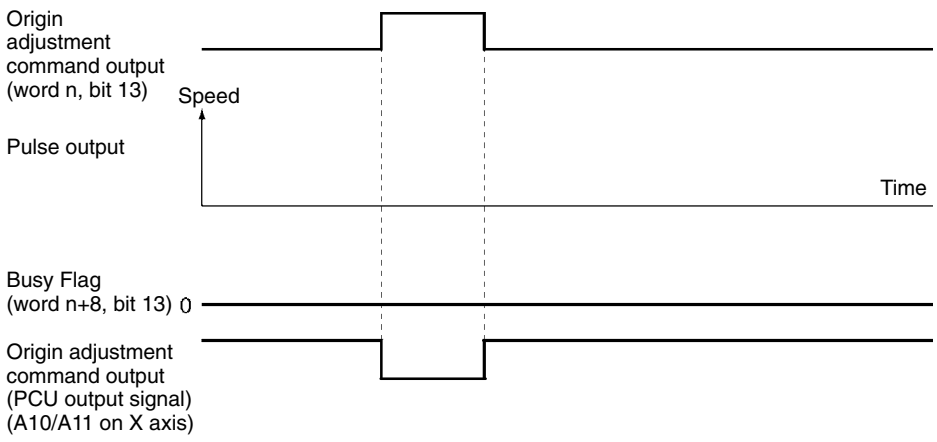

9-10 Backlash Compensation

9-10-1 Outline of Operation

"Backlash" means the play between the driving axis and the mechanical system being driven. If there is backlash in positioning from the positive or negative direction it will cause a discrepancy of the same magnitude in the positioning. Backlash compensation is used to make this discrepancy as small as possible.

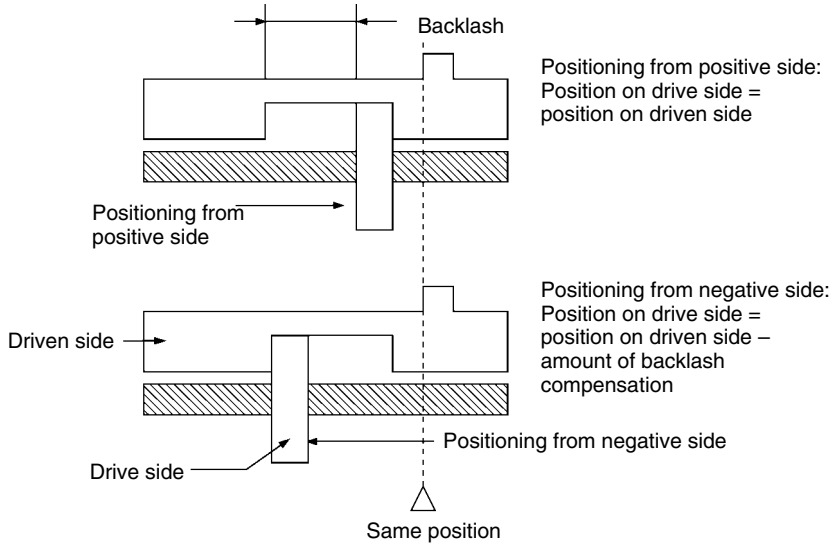

In the above diagram, after positioning from the positive side, backlash is compensated for up to the amount of the output of pulses set for the backlash compensation either when positioning in the negative direction or when the positioning direction (pulse output direction) is reversed.

With this Unit, the backlash compensation value and compensation speed can be designated by parameters.

The backlash compensation operation is used after the origin has been established. If the backlash compensation speed is set to "0," compensatory output is made at the initial speed. If the initial speed is below 250 pps, the compensatory speed is output at 250 pps.

9-10-2 Setting Axis Parameters

Data	Parameter area for each axis				Data Configuration
	NC113	NC213	NC413		
	X axis	Y axis	Z axis	U axis	
Backlash compensation	m+12	m+36	m+60	m+84	15 … 00 $x10^3$ $x10^2$ $x10^1$ $x10^0$ Backlash compensation, from 0000 to 9999 (BCD) pulses
Backlash compensation speed	m+13	m+37	m+61	m+85	15 14 13 12 … 00 $x10^2$ $x10^1$ $x10^0$ Backlash compensation speed (BCD) $x10^3$ Factor: 00: x 1, 01: x 10, 10: x 100, 11: x1,000

9-10-3 Backlash Compensation Operation

Reciprocating Operation on One Axis

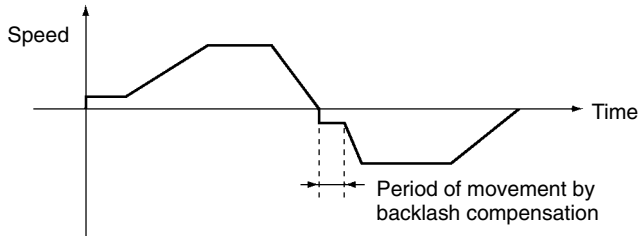

9-10-4 Backlash Compensation With Linear Interpolation

Backlash compensation can be set separately for each axis when two or more axes are used for interpolation operations. While backlash compensation pulses are being output, pulse outputs for all other interpolation operations are stopped.

Example: Linear interpolation using the X and Y axes

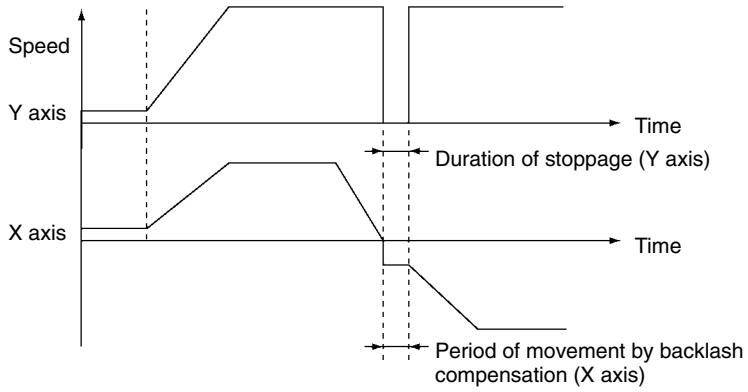

If the backlash compensation setting is different for each axis in an interpolation operation, during the period that interpolation is being executed for both axes simultaneously, the axes will wait for the compensation to be completed and then accelerate.

Example: Linear interpolation using the X and Y axes

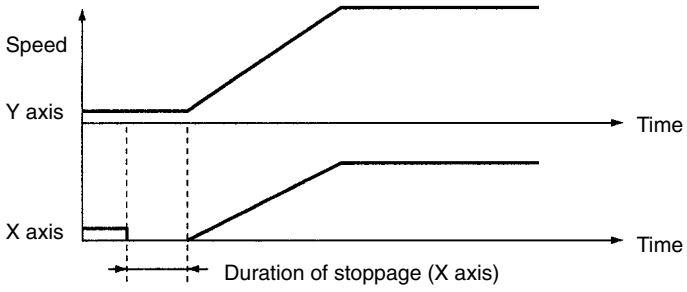

SECTION 10
Program Examples

This section provides examples of programs for using the Position Control Unit.

10-1 Operating Procedures for Program Examples 190
10-2 Memory Operation 192
10-2-1 Checking Positioning Operations 192
10-2-2 Repeat Operation 196
10-2-3 Cancelling Positioning 200
10-3 Direct Operation 206
10-3-1 Positioning with Positions in the DM Area 206
10-3-2 Inching 209
10-4 Linear Interpolation 211
10-4-1 Two-axis Linear Interpolation 211
10-5 Origin Search 216
10-5-1 Origin Search Using Limit Input 216
10-6 Override 218
10-6-1 Changing Speed During Continuous Output 218
10-7 Transferring and Saving Data 221
10-7-1 Copying Data 221

10-1 Operating Procedures for Program Examples

The following explanations describe some procedures for using test equipment to check the operation of the program examples introduced in this section. Refer to the various relevant sections for more information on particular procedures.

Startup Procedures

1, 2, 3...

1. Preparing the Equipment to be Used
   The following devices are the minimum required for positioning with a Position Control Unit (PCU).

Model	Notes
Position Control Unit	C200HW-NC113/NC213/NC413
SYSMAC C200H-series CPU Unit	C200H/C200HS/C200HX/HG/HE-(Z)E Series
Power Supply Unit	C200HW-PA204/PA204S/PD024 (A Power Supply Unit is needed for all Units apart from the C200H/C200HS Series).
Backplane	C200H/C200HS: C200H-BC□□□-V2 C200HX/HG/HE-(Z)E: C200HW-BC□□□
Motor driver	The following are required: Servomotor, driver, and cabling between the motor and driver. Stepping motor, driver, and cabling between the motor and driver. Control cable between the PCU and driver.
24-VDC power supply	Direct current
Tools	SYSMAC C200H-series tools (such as CQM1-PRO01-E)
Personal computer	Required when using SYSMAC Support Software and the SYSMAC-NCT Support Tool. (A connecting cable for the CPU Unit is also required separately)

2. Mounting the Units
   The CPU Unit, PCU and Power Supply Unit are mounted on a Backplane. The following settings are needed for the PCU.

Item	Setting
Special I/O Unit number	When any of the C200HS/HE-(Z)E models, or C200HG/HX-CPU3□-(Z)E/4□-(Z)E are installed: NC113/213: 0 to 9 NC413: 0 to 8 When any of the C200HG/HX-CPU5□-(Z)E/6□-(Z)E models, or C200HX-CPU85-ZE are installed: NC113/213: 0 to 9, A to F NC413: 0 to 8, A to E

3. Connections and Circuitry (Refer to *Section 2 Specifications and Wiring*.)
   Wire the power supplies with the motor and driver, and with the PCU and driver. If the following minimum wiring requirements are not met, an error will be generated and the PCU will not operate.

Terminals	Wiring
24-V power supply for output (A1/B1)	+24 VDC (24-VDC power supply positive terminal)
Output power supply 0 V (A2/B2)	0 V (24-VDC ground for power supply)
Common input (A24/B24)	+24 VDC (24-VDC power supply positive terminal)
CW limit input (A22/B22)	Connected to the ground of the power supply used as the common input through the N.C. contact switch. (Can be changed to a N.O. contact in the common parameters.)
CCW limit input (A23/B23)	Connected to the ground of the power supply used as the common input through the N.C. contact switch. (Can be changed to a N.O. contact in the common parameters.)
Emergency stop input (A20/B20)	Connected to the ground of the power supply used as the common input through the N.C. contact switch.

Note When using the NC213/NC413, make the above connections as a minimum, even for unused axes. If this wiring is not done, an error will be generated for applicable axes but other axes will operate normally.
Also be sure to use separate power supplies for the 24-VDC output power supply and the common input power supply.

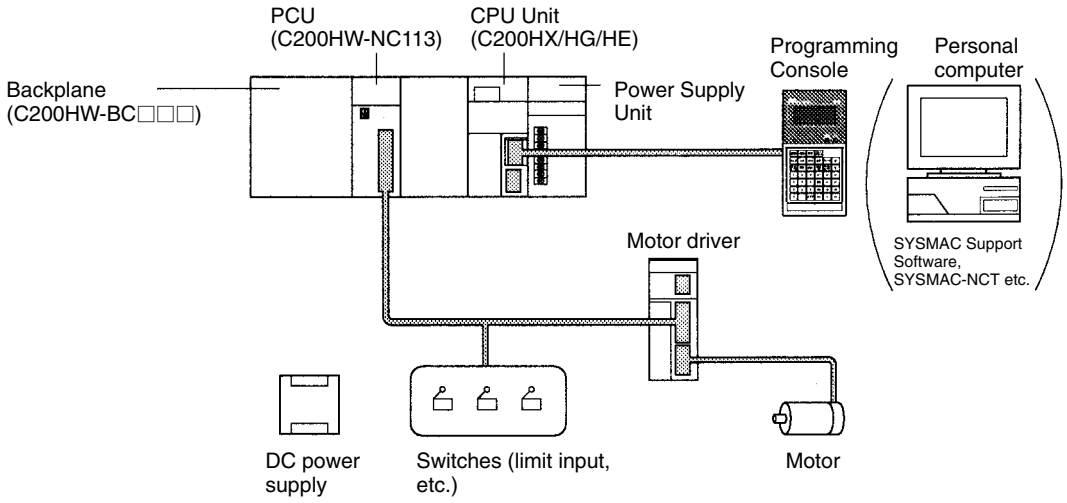

4. Data Memory Settings (Refer to *Section 4 Data Areas* and *Section 5 Transferring and Saving Data*.)
   Refer to the data memory settings for each program example and then set the values for the DM area. When the settings have been completed, enable the settings by re-connecting the power or restarting.
5. Setting the Data (Refer to *Section 4 Data Area* and *Section 5 Transferring and Saving Data*.)
   Refer to the data settings for each program example and then set values for the parameters, sequences, speeds, positions, acceleration and deceleration, dwell times and zones.

6. Inputting the Program
   Refer to the program in each program example and then use tools such as the SYSMAC Support Software, Programming Console and so on to input the ladder program to the CPU Unit.
7. Checking
   Check the operation of each program example.

List of Program Examples

Name		Page
Memory operation	Checking positioning operations	192
	Repeat operation	196
	Cancelling positioning	200
Direct operation	Positioning with positions in the DM area	206
	Inching	209
Linear interpolation	Two-axis linear interpolation	211
Origin search	Origin search using limit input	216
Override	Changing speed during continuous output	218
Transferring and saving data	Copying data	221

10-2 Memory Operation

10-2-1 Checking Positioning Operations

Overview

- The operation of each positioning sequence can be tested using INDEPENDENT START under memory operation.
- Positioning is executed one positioning sequence at a time with INDEPENDENT START, according to the contents of each sequence.
- When using INDEPENDENT START, positioning is stopped after the completion of each positioning sequence, without reference to the completion code set for that sequence.

Operation Examples

The following examples show positioning tests on positioning sequences with completion codes set either to automatic or continuous.

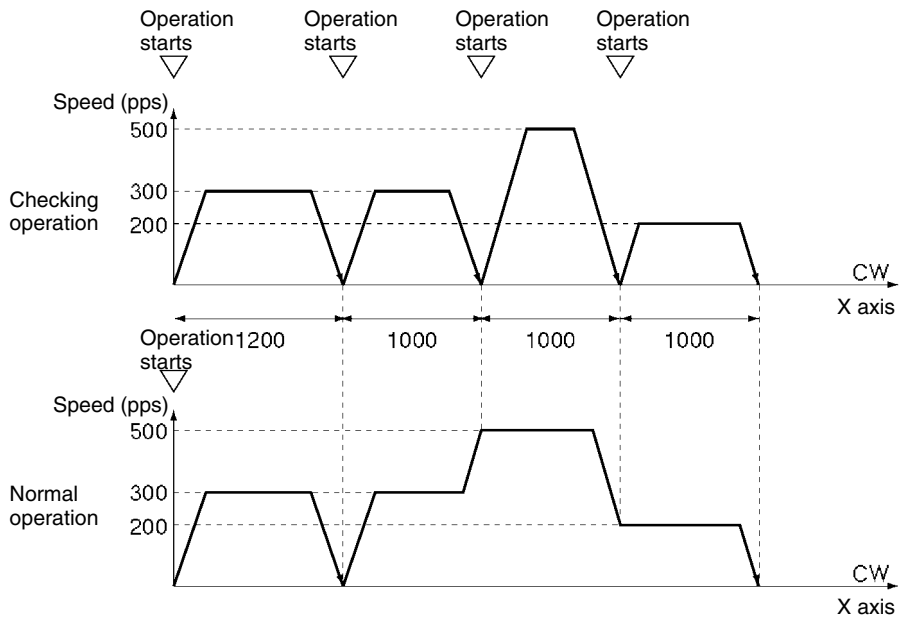

When the Operation Checking Switch is ON

1, 2, 3...

1. When the operation start switch is turned ON, the program outputs 1,200 pulses CW on the X axis and stops.
2. When the operation start switch is turned ON, the program outputs 1,000 pulses CW on the X axis and stops.
   When the operation start switch is again turned ON, the program outputs 1,000 pulses CW on the X axis and stops.
   When the operation start switch is again turned ON, the program outputs 1,000 pulses CW on the X axis and stops.

When the Operation Checking Switch is OFF

1, 2, 3...

1. When the operation start switch is turned ON, the program outputs 1,000 pulses CW on the X axis and stops, and immediately moves to the positioning in the next step (2, below). (Automatic)
2. Using continuous positioning, the program outputs 3000 pulses CW on the X axis and stops. (Continuous)

Setting the Unit

Unit Number: Unit #0
Unit Used: NC113

Data Memory Settings

DM	Setting	Contents of setting	DM	Setting	Contents of setting
1000	000D	Sets the operating data area to DM 0500 onwards.	1014	****	Acceleration/deceleration curve: trapezoid
1001	0500		1015	0010	Acceleration time (from 0 to maximum speed): 10 ms
1002	0001	Not mounted to Slave. DM 1004 onwards used for parameter transfer.	1016	0000	
1003	****	Reserved	1017	0010	Deceleration time (from maximum speed to 0): 10 ms
1004	****	I/O setting	1018	0000	
1005	***#	Operation mode/origin search	1019	****	Positioning monitor time
1006	0500	Maximum speed: 500 pps	1020	****	CCW software limit
1007	****	Initial speed	1021	****	
1008	0500	Origin search high speed	1022	****	CW software limit
1009	0100	Origin search proximity speed	1023	****	
1010	****	Origin compensation	1024	****	Reserved
1011	****		1025	****	
1012	****	Backlash compensation	1026	****	
1013	****	Backlash compensation speed	1027	****	

Note Set the items marked in the table with asterisks (*) to their factory settings. Set the operation mode of items marked in the table with a hash mark (#) to accord with the motor and driver.

Designation of the Operating Data Area

The operating data area is allocated to DM 0500 through DM 0533 according to the data memory settings. The operating data area is not used in the following program examples, so it is not set.

Data Settings

Axis Parameters

The values for DM 1004 onwards are transferred when the power is turned on (or at a restart).

Positioning Sequences

Address	Setting	Contents of setting	
1000	1001	Sequence #0	X axis designation Completion code: automatic Dwell time #0 Acceleration time #0 Deceleration time #0 Initial speed #3 Target speed #1
1001	0000		
1002	0301		
1003	1002	Sequence #1	X axis designation Completion code: continuous Dwell time #0 Acceleration time #0 Deceleration time #0 Initial speed #3 Target speed #1
1004	0000		
1005	0301		
1006	1002	Sequence #2	X axis designation Completion code: continuous Dwell time #0 Acceleration time #0 Deceleration time #0 Initial speed #3 Target speed #2
1007	0000		
1008	0302		
1009	1003	Sequence #3	X axis designation Completion code: bank end Dwell time #0 Acceleration time #0 Deceleration time #0 Initial speed #3 Target speed #0
1010	0000		
1011	0300		

Note Addresses other than the above should be set to their factory values.

Speeds

Address	Setting	Contents of setting	
1300	0200	Speed #0	200 pps
1301	0300	Speed #1	300 pps
1302	0500	Speed #2	500 pps
1303	0000	Speed #3	0 pps

Note Addresses other than the above should be set to their factory values.

Positions

Address	Setting	Contents of setting	
1400	1200	Position #0	CW/incremental/1200 pulses
1401	2000		
1402	1000	Position #1	CW/incremental/1000 pulses
1403	2000		
1404	1000	Position #2	CW/incremental/1000 pulses
1405	2000		
1406	1000	Position #3	CW/incremental/1000 pulses
1407	2000		

Note Addresses other than the above should be set to their factory values.

Acceleration and Deceleration Times

Acceleration and deceleration times use the values in the parameter area, so this data area needs to be set completely to the factory settings.

Dwell Times

Dwell times are not used in these programs, so this data area needs to be set completely to the factory settings.

Zones

Zones are not used in these programs, so this data area needs to be set completely to the factory settings.

Program

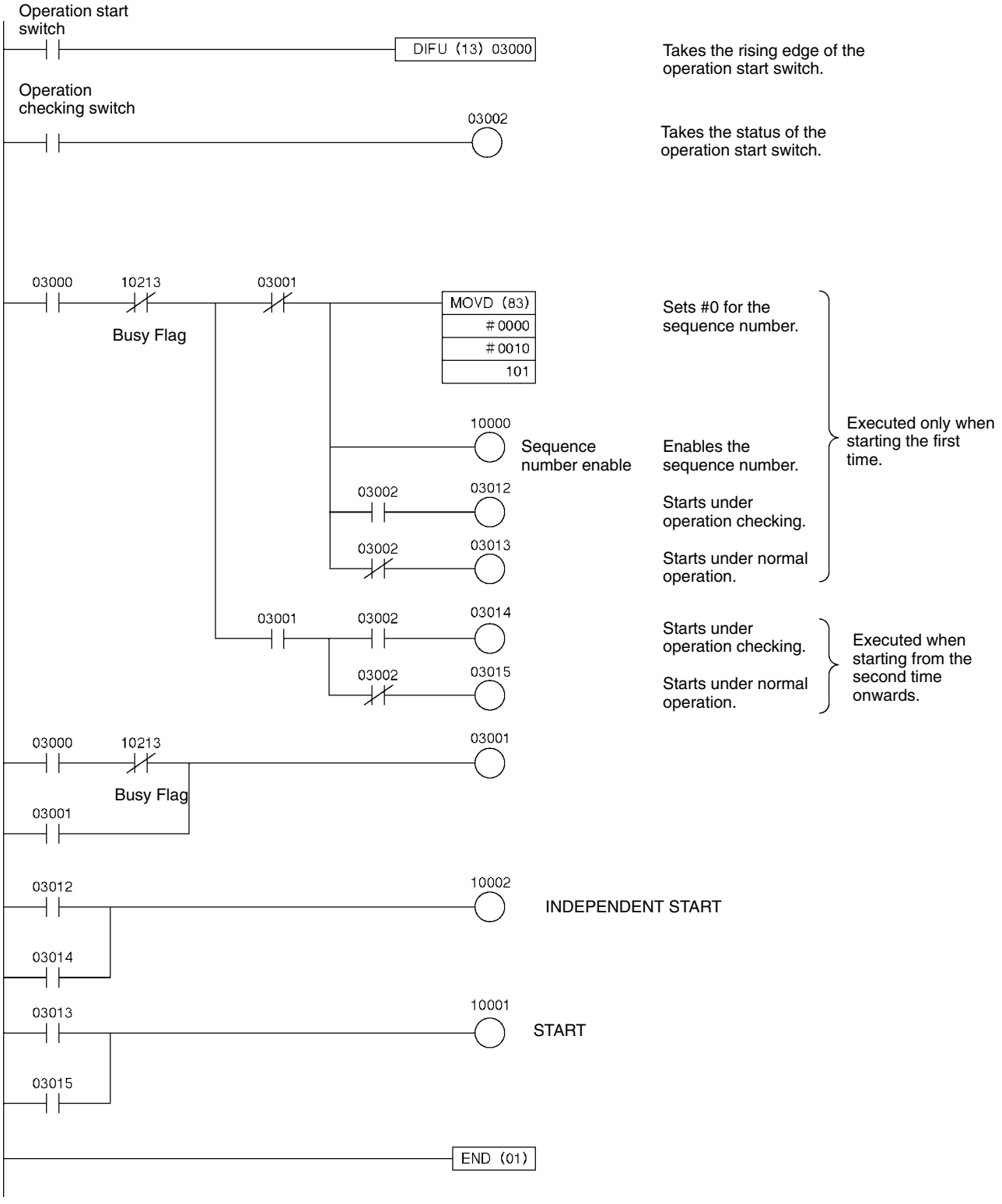
Operation start switch
DIFU (13) 03000
Takes the rising edge of the operation start switch.
Operation checking switch
03002
Takes the status of the operation start switch.
03000
10213
03001
Busy Flag
MOVD (83)
#0000
#0010
101
Sets #0 for the sequence number.
10000
Sequence number enable
Enables the sequence number.
03002
03012
Starts under operation checking.
03002
03013
Starts under normal operation.
Executed only when starting the first time.
03001
03002
03014
Starts under operation checking.
03002
03015
Starts under normal operation.
Executed when starting from the second time onwards.
03000
10213
03001
Busy Flag
03001
03012
10002
INDEPENDENT START
03014
03013
10001
START
03015
END (01)

10-2-2 Repeat Operation

Overview

- Any operation can be executed repeatedly under memory operation using the bank end completion code.
- When the completion code of any positioning sequence is set to bank end, positioning is stopped after the operation for that sequence has been completed.
- When operation is started again, it returns to the sequence number that was previously enabled and executes the positioning.

Operation Example

The following is an example of repeating a particular operation.

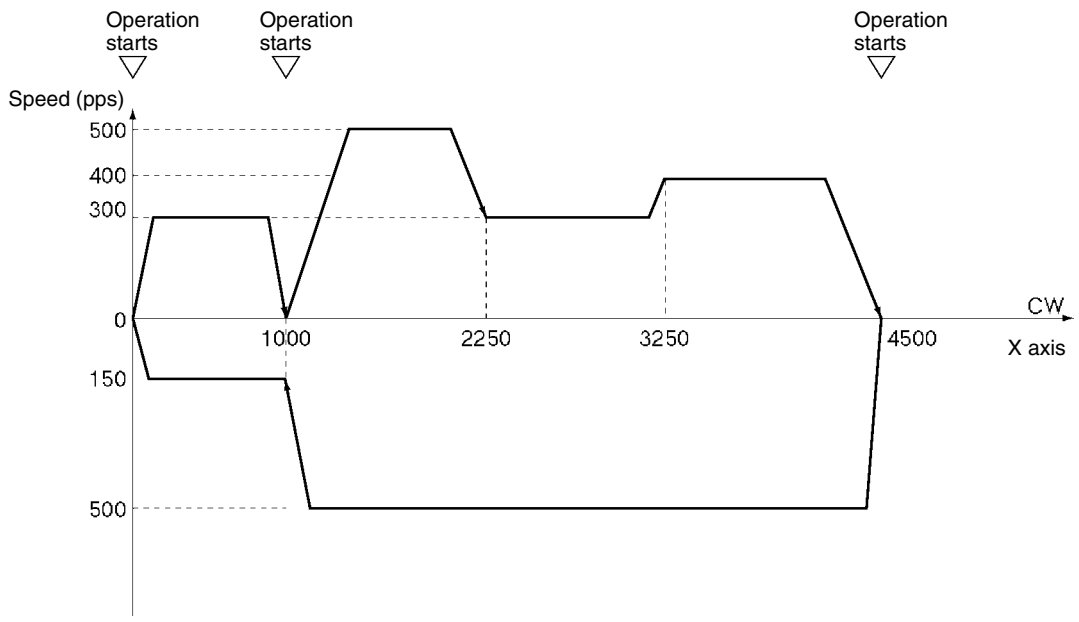

1, 2, 3...

1. When the operation start switch is turned ON at the origin, the program outputs 1,000 pulses CW on the X axis and stops. (Independent)
   (First, set the origin to “0” either by performing an origin search or by executing PRESENT POSITION CHANGE.)
2. When the operation start switch turns ON, positioning is executed using the continuous completion code, and the program positions to 4,500 pulses CW on the X axis and stops.
3. When the operation start switch turns ON, positioning is executed using the continuous completion code. The program positions to the X axis origin and stops.
4. When the operation start switch turns ON, the operations in steps 1 to 3 above are repeated.

Setting the Unit

Unit Number: Unit #0
Unit Used: NC113

Data Memory Settings

DM	Setting	Contents of setting	DM	Setting	Contents of setting
1000	000D	Set the operating data area to DM 0500 onwards	1014	****	Acceleration/deceleration curve: trapezoid
1001	0500		1015	0010	Acceleration time (from 0 to maximum speed): 10 ms
1002	0001	Not mounted to a Slave. DM 1004 onwards used for parameter transfer.	1016	0000	
1003	****	Reserved	1017	0010	Deceleration time (from maximum speed to 0): 10 ms
1004	****	I/O setting	1018	0000	
1005	***#	Operation mode/origin search	1019	****	Positioning monitor time
1006	0500	Maximum speed: 500 pps	1020	****	CCW software limit
1007	****	Initial speed	1021	****	
1008	0500	Origin search high speed	1022	****	CW software limit
1009	0100	Origin search proximity speed	1023	****	
1010	****	Origin compensation value	1024	****	Reserved
1011	****		1025	****	
1012	****	Backlash compensation value	1026	****	
1013	****	Backlash compensation speed	1027	****	

Note Set the items marked in the table with asterisks (*) to their factory settings. Set the operation mode of those items marked in the table with a hash mark (#) to accord with the motor and driver.

Designation of the Operating Data Area

The operating data area is allocated to DM 0500 through DM 0533 by the data memory settings. The operating data area is not used in the following program examples, so it is not set.

Data Settings

Axis Parameters

The values for DM 1004 onwards are transferred when the power in turned on (or at restart).

Positioning Sequences

Address	Setting	Contents of settings	
1000	1000	Sequence #0	X axis designation Completion code: terminating
1001	0011		Dwell time #0 Acceleration time #1 Deceleration time #1
1002	0401		Initial speed #4 Target speed #1
1003	1002	Sequence #1	X axis designation Completion code: continuous
1004	0022		Dwell time #0 Acceleration time #2 Deceleration time #2
1005	0403		Initial speed #4 Target speed #3
1006	1002	Sequence #2	X axis designation Completion code: continuous
1007	0022		Dwell time #0 Acceleration time #2 Deceleration time #2
1008	0401		Initial speed #4 Target speed #1
1009	1000	Sequence #3	X axis designation Completion code: Terminating
1010	0022		Dwell time #0 Acceleration time #2 Deceleration time #2
1011	0402		Initial speed #4 Target speed #2
1012	1002	Sequence #4	X axis designation Completion code: continuous
1013	0011		Dwell time #0 Acceleration time #1 Deceleration time #1
1014	0403		Initial speed #4 Target speed #3
1015	1003	Sequence #5	X axis designation Completion code: bank end
1016	0011		Dwell time #0 Acceleration time #1 Deceleration time #1
1017	0400		Initial speed #4 Target speed #0

Note Addresses other than the above should be set to their factory values.

Speeds

Address	Setting	Contents of setting	
1300	0150	Speed #0	150 pps
1301	0300	Speed #1	300 pps
1302	0400	Speed #2	400 pps
1303	0500	Speed #3	500 pps
1304	0000	Speed #4	0 pps

Note Addresses other than the above should be set to their factory values.

Positions

Address	Setting	Contents of settings
1400	1000	Position #0 CW/absolute/1,000 pulses
1401	0000	
1402	2250	Position #1 CW/absolute/2,250 pulses
1403	0000	
1404	3250	Position #2 CW/absolute/3,250 pulses
1405	0000	
1406	4500	Position #3 CW/absolute/4,500 pulses
1407	0000	
1408	1000	Position #4 CW/absolute/1,000 pulses
1409	0000	
1410	0000	Position #5 CW/absolute/0 pulses
1411	0000	

Note Addresses other than the above should be set to their factory values.

Acceleration and Deceleration Times

Address	Setting	Contents of settings
1602	0005	Acceleration #1 5 ms
1603	0000	
1604	0020	Acceleration #2 20 ms
1605	0000	
1622	0005	Deceleration #1 5 ms
1623	0000	
1624	0020	Deceleration #2 20 ms
1625	0000	

Note Addresses other than the above should be set to their factory values.

Dwell Times

Dwell times are not used in these programs, so this data area needs to be set completely to the factory settings.

Zones

Zones are not used in these programs, so this data area needs to be set completely to the factory settings.

Program

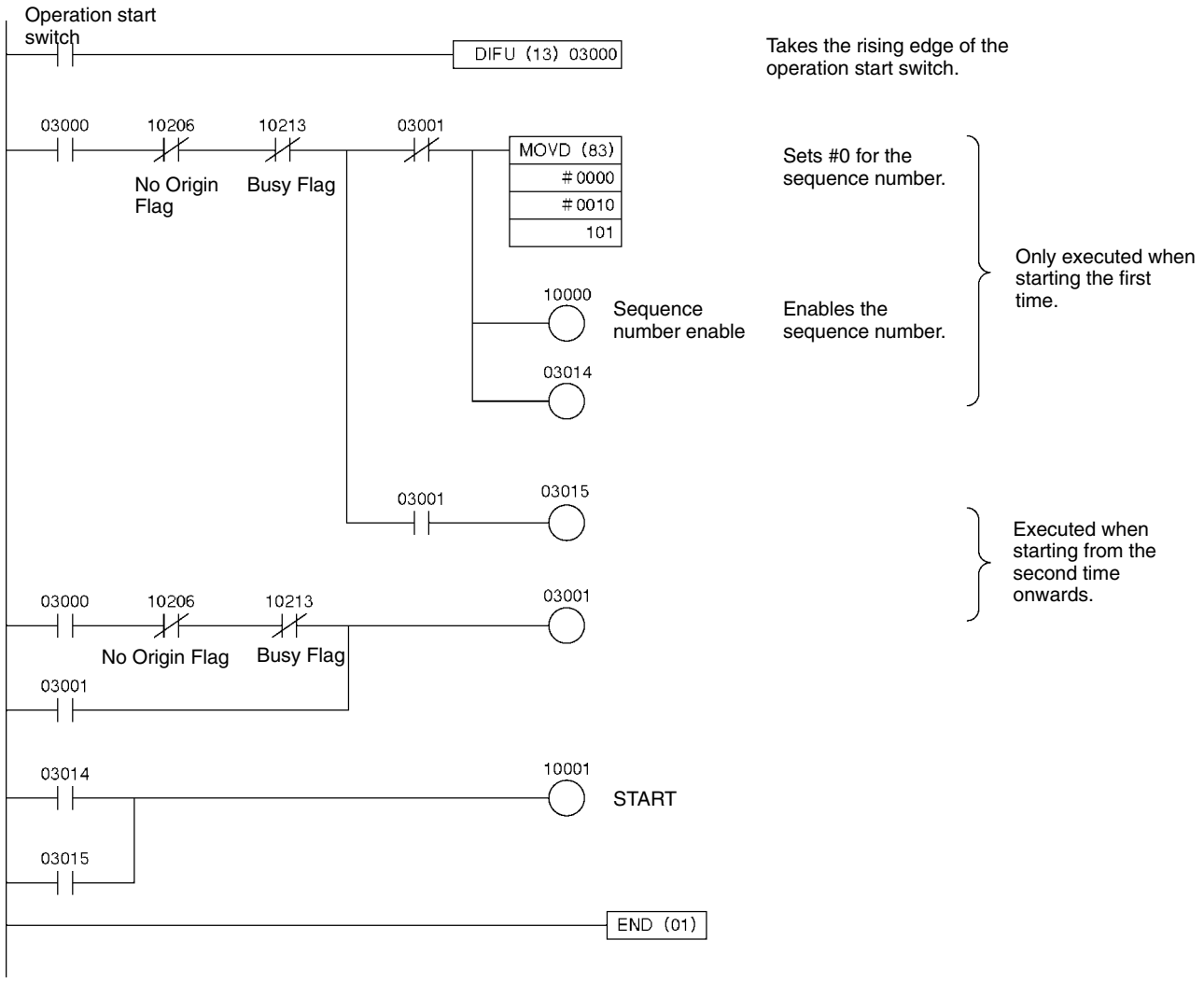

10-2-3 Cancelling Positioning

Overview

- A forced interrupt can be used during memory operation to cancel the current positioning and perform a circumvention in case of an emergency.
- This operation forcibly cancels the current positioning operation and executes positioning from the designated sequence number.
- The pulses currently being output are stopped immediately without deceleration.

Operation Example

In the following example, a forced interrupt is used during positioning to execute a sequence for returning to the origin.

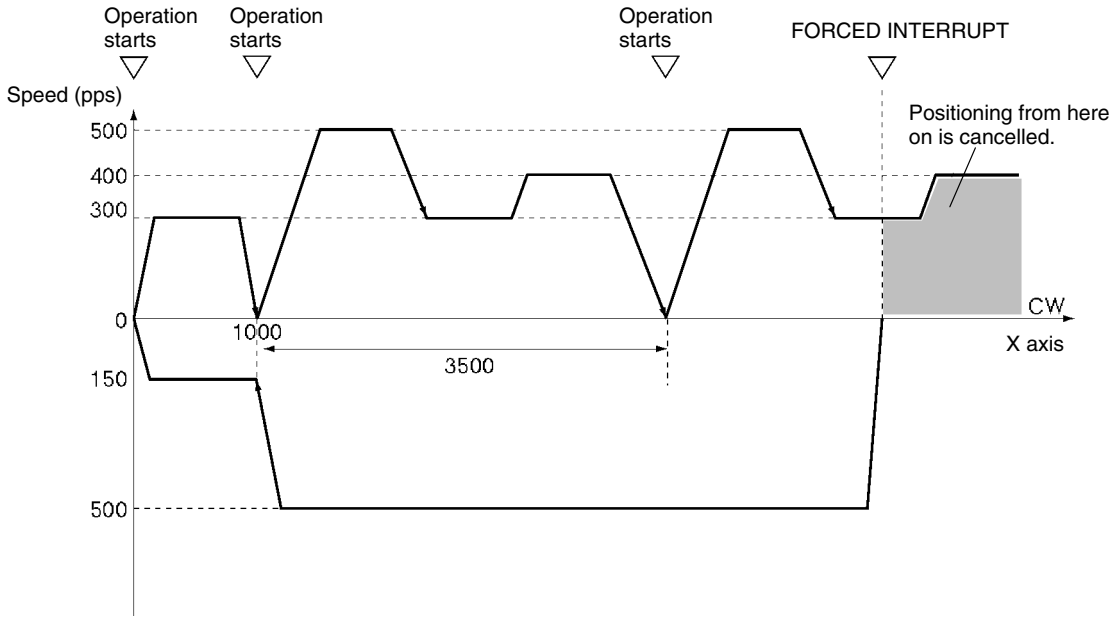

1, 2, 3...

1. When the operation start switch is turned ON at the origin, the program outputs 1,000 pulses CW on the X axis and stops. (Independent)
   (First, set the origin to “0” either by performing an origin search operation or by executing PRESENT POSITION CHANGE.)
2. When the operation start switch turns ON, positioning is executed using the continuous completion code. The program outputs 3,500 pulses CW on the X axis and stops.
3. When the operation start switch is turned ON, the procedure in 2 above is repeated.
4. When the FORCED INTERRUPT switch is turned ON during the above positioning operation, that operation is immediately canceled and positioning is executed to the absolute-coordinates origin.

Setting the Unit

Unit Number: Unit #0
Unit Used: NC113

Data Memory Settings

DM	Setting	Contents of setting	DM	Setting	Contents of settings
1000	000D	Set the operating data area to DM 0500 onwards	1014	****	Acceleration/deceleration curve: trapezoid
1001	0500		1015	0010	Acceleration time (from 0 to maximum speed): 10 ms
1002	0001	Not mounted to a Slave. DM 1004 onwards used for parameter transfer	1016	0000	
1003	****	Reserved	1017	0010	Deceleration time (from maximum speed to 0): 10 ms
1004	****	I/O setting	1018	0000	
1005	***#	Operation mode/origin search	1019	****	Positioning monitor time
1006	0500	Maximum speed: 500 pps	1020	****	CCW software limit
1007	****	Initial speed	1021	****	
1008	0500	Origin search high speed	1022	****	CW software limit
1009	0100	Origin search proximity speed	1023	****	
1010	****	Origin compensation value	1024	****	Reserved
1011	****		1025	****	
1012	****	Backlash compensation value	1026	****	
1013	****	Backlash compensation speed	1027	****	

Note Set the items marked in the table with asterisks (*) to their factory settings. Set the operation mode of those items marked in the table with a hash mark (#) to accord with the motor and driver.

Designation of the Operating Data Area

The operating data area is allocated to DM 0500 through DM 0533 by the data memory settings. The operating data area is not used in the following program examples, so it is not set.

Data Settings

Axis Parameters

The values for DM 1004 onwards are transferred when the power in turned on (or at restart).

Positioning Sequences

Address	Setting	Contents of setting	
1000	1000	Sequence #0	X axis designation Completion code: terminating Dwell time #0 Acceleration time #1 Deceleration time #1 Initial speed #4 Target speed #1
1001	0011		
1002	0401		
1003	1002	Sequence #1	X axis designation Completion code: continuous Dwell time #0 Acceleration time #2 Deceleration time #2 Initial speed #4 Target speed #3
1004	0022		
1005	0403		
1006	1002	Sequence #2	X axis designation Completion code: continuous Dwell time #0 Acceleration time #2 Deceleration time #2 Initial speed #4 Target speed #1
1007	0022		
1008	0401		
1009	1003	Sequence #3	X axis designation Completion code: bank end Dwell time #0 Acceleration time #2 Deceleration time #2 Initial speed #4 Target speed #2
1010	0022		
1011	0402		
1012	1002	Sequence #4	X axis designation Completion code: continuous Dwell time #0 Acceleration time #1 Deceleration time #1 Initial speed #4 Target speed #3
1013	0011		
1014	0403		
1015	1003	Sequence #5	X axis designation Completion code: bank end Dwell time #0 Acceleration time #1 Deceleration time #1 Initial speed #4 Target speed #0
1016	0011		
1017	0400		

Note Addresses other than the above should be set to their factory values.

Speeds

Address	Setting	Contents of setting	
1300	0150	Speed #0	150 pps
1301	0300	Speed #1	300 pps
1302	0400	Speed #2	400 pps
1303	0500	Speed #3	500 pps
1304	0000	Speed #4	0 pps

Note Addresses other than the above should be set to their factory values.

Positions

Address	Setting	Contents of settings
1400	1000	Position #0 CW/absolute/1,000 pulses
1401	0000	
1402	1500	Position #1 CW/incremental/1,500 pulses
1403	2000	
1404	1000	Position #2 CW/incremental/1,000 pulses
1405	2000	
1406	1000	Position #3 CW/incremental/1,000 pulses
1407	2000	
1408	1000	Position #4 CW/absolute/1,000 pulses
1409	0000	
1410	0000	Position #5 CW/absolute/0 pulses
1411	0000	

Note Addresses other than the above should be set to their factory values.

Acceleration and Deceleration Times

Address	Setting	Contents of settings
1602	0005	Acceleration #1 5 ms
1603	0000	
1604	0020	Acceleration #2 20 ms
1605	0000	
1622	0005	Deceleration #1 5 ms
1623	0000	
1624	0020	Deceleration #2 20 ms
1625	0000	

Note Addresses other than the above should be set to their factory values.

Dwell Times

Dwell times are not used in these programs, so this data area needs to be set completely to the factory settings.

Zones

Zones are not used in these programs, so this data area needs to be set completely to the factory settings.

Program

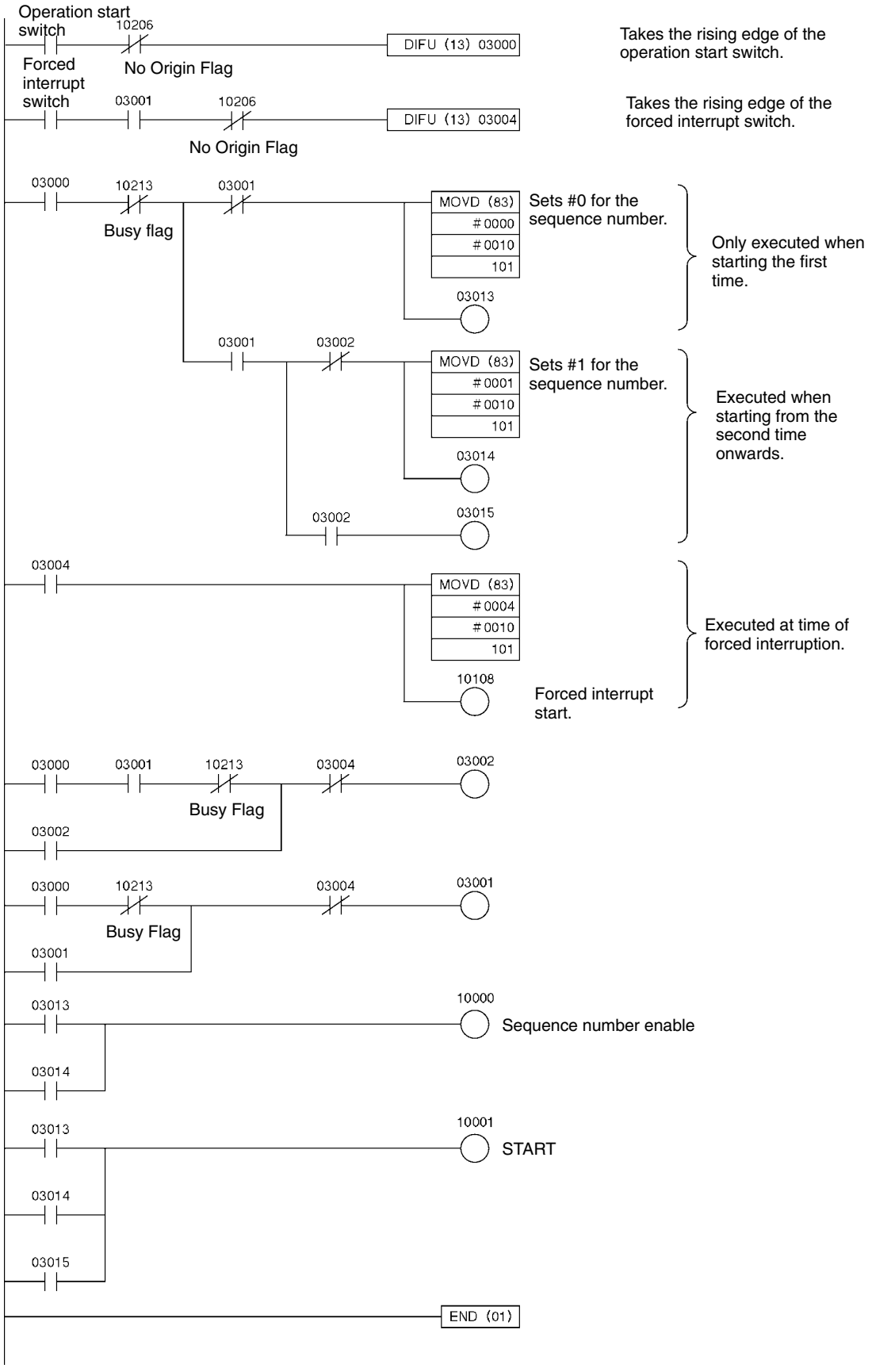
Operation start switch
10206
DIFU (13) 03000
Takes the rising edge of the operation start switch.
Forced interrupt switch
No Origin Flag
03001
10206
DIFU (13) 03004
Takes the rising edge of the forced interrupt switch.
No Origin Flag
03000
10213
03001
Busy flag
MOVD (83)
#0000
#0010
101
03013
Sets #0 for the sequence number.
Only executed when starting the first time.
03001
03002
MOVD (83)
#0001
#0010
101
03014
Sets #1 for the sequence number.
Executed when starting from the second time onwards.
03002
03015
03004
MOVD (83)
#0004
#0010
101
10108
Forced interrupt start.
Executed at time of forced interruption.
03000
03001
10213
03004
03002
Busy Flag
03002
03000
10213
03004
03001
Busy Flag
03001
03013
10000
Sequence number enable
03014
03013
10001
START
03014
03015
END (01)

10-3 Direct Operation

10-3-1 Positioning with Positions in the DM Area

Overview

- A series of positioning operations can be executed by sequential transmission of DM data with direct operation.
- Positioning is executed according to the designations set in the operating data area.
- Whether positions that have been set are regarded as absolute or incremental is determined by whether positioning is started by the ABSOLUTE MOVEMENT bit or the RELATIVE MOVEMENT bit.

Operation Example

The following example shows positioning by ABSOLUTE MOVEMENT command using positions on the DM.

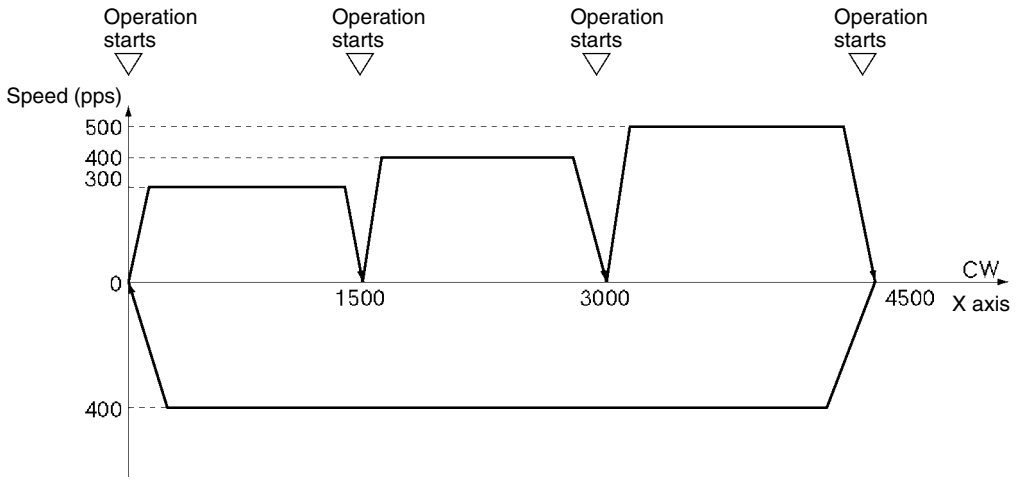

1, 2, 3...

1. When the operation start switch is turned ON at the origin, positioning is executed to1500 in the CW direction on the X axis.
2. Subsequently, as the switch turns ON each time, positioning is executed to 3000 in the CW direction on the X axis and then to 4500 in the CW direction on the X axis, and then returns to the origin and stops. (First, set the origin to “0” either by performing an origin search or by executing PRESENT POSITION CHANGE.)

Setting the Unit

Unit Number: Unit #0
Unit Used: NC113

Data Memory Settings

DM	Setting	Contents of setting	DM	Setting	Contents of setting
1000	000D	Set the operating data area to DM 0500 onwards	1014	****	Acceleration/deceleration curve: trapezoid
1001	0500		1015	0010	Acceleration time (from 0 to maximum speed): 10 ms
1002	0001	Not mounted to a Slave. DM 1004 onwards used for parameter transfer	1016	0000	
1003	****	Reserved	1017	0010	Deceleration time (from maximum speed to 0): 10 ms
1004	****	I/O setting	1018	0000	
1005	***#	Operation mode/origin search	1019	****	Positioning monitor time
1006	0500	Maximum speed: 500 pps	1020	****	CCW software limit
1007	****	Initial speed	1021	****	
1008	0500	Origin search high speed	1022	****	CW software limit
1009	0100	Origin search proximity speed	1023	****	
1010	****	Origin compensation value	1024	****	Reserved
1011	****		1025	****	
1012	****	Backlash compensation value	1026	****	
1013	****	Backlash compensation speed	1027	****	

Note Set the items marked in the table with asterisks (*) to their factory settings. Set the operation mode of those items marked in the table with a hash mark (#) to accord with the motor and driver.

Designation of the Operating Data Area

The operating data area is allocated to DM 0500 through DM 0533 by the data memory settings. No prior settings are required for the operating data area because the data is be set in the program.

Data Settings

Axis Parameters

The values for DM 1004 onwards are transferred when the power is turned on (or at restart).

Positioning Sequences

This data area is not used with direct operation. It should be left entirely at the factory settings.

Speeds

This data area is not used with direct operation. It should be left entirely at the factory settings.

Positions

This data area is not used with direct operation. It should be left entirely at the factory settings.

Acceleration and Deceleration Times

Address	Setting	Contents of setting
1602	0005	Acceleration #1 5 ms
1603	0000	
1604	0020	Acceleration #2 20 ms
1605	0000	
1622	0005	Deceleration #1 5 ms
1623	0000	
1624	0020	Deceleration #2 20 ms
1625	0000	

Note Addresses other than the above should be set to their factory values.

Dwell Times

Dwell times are not used in these programs, so this data area needs to be set completely to the factory settings.

Zones

Zones are not used in these programs, so this data area needs to be set completely to the factory settings.

DM Area

DM 0000 through DM 0019 are used in this program example, and the following positions are set in this area.

DM	Setting	Contents of setting	DM	Setting	Contents of setting
0000	1500	CW direction, 1,500 pulses	0010	4500	CW direction, 4,500 pulses
0001	0000		0011	0000	
0002	0300	Target speed: 300 pps	0012	0500	Target speed: 500 pps
0003	0000	Override (not used)	0013	0000	Override (not used)
0004	1100	Acceleration/deceleration time number: 1 Teaching number (Not used.)	0014	1100	Acceleration/deceleration time number: 1 Teaching number (Not used.)
0005	3000	CW direction, 3,000 pulses	0015	0000	CW direction, 0 pulses
0006	0000		0016	0000	
0007	0400	Target speed: 400 pps	0017	0400	Target speed: 400 pps
0008	0000	Override (not used)	0018	0000	Override (not used)
0009	1100	Acceleration/deceleration time number: 1 Teaching number (Not used.)	0019	2200	Acceleration/deceleration time number: 2 Teaching number (Not used.)

Program

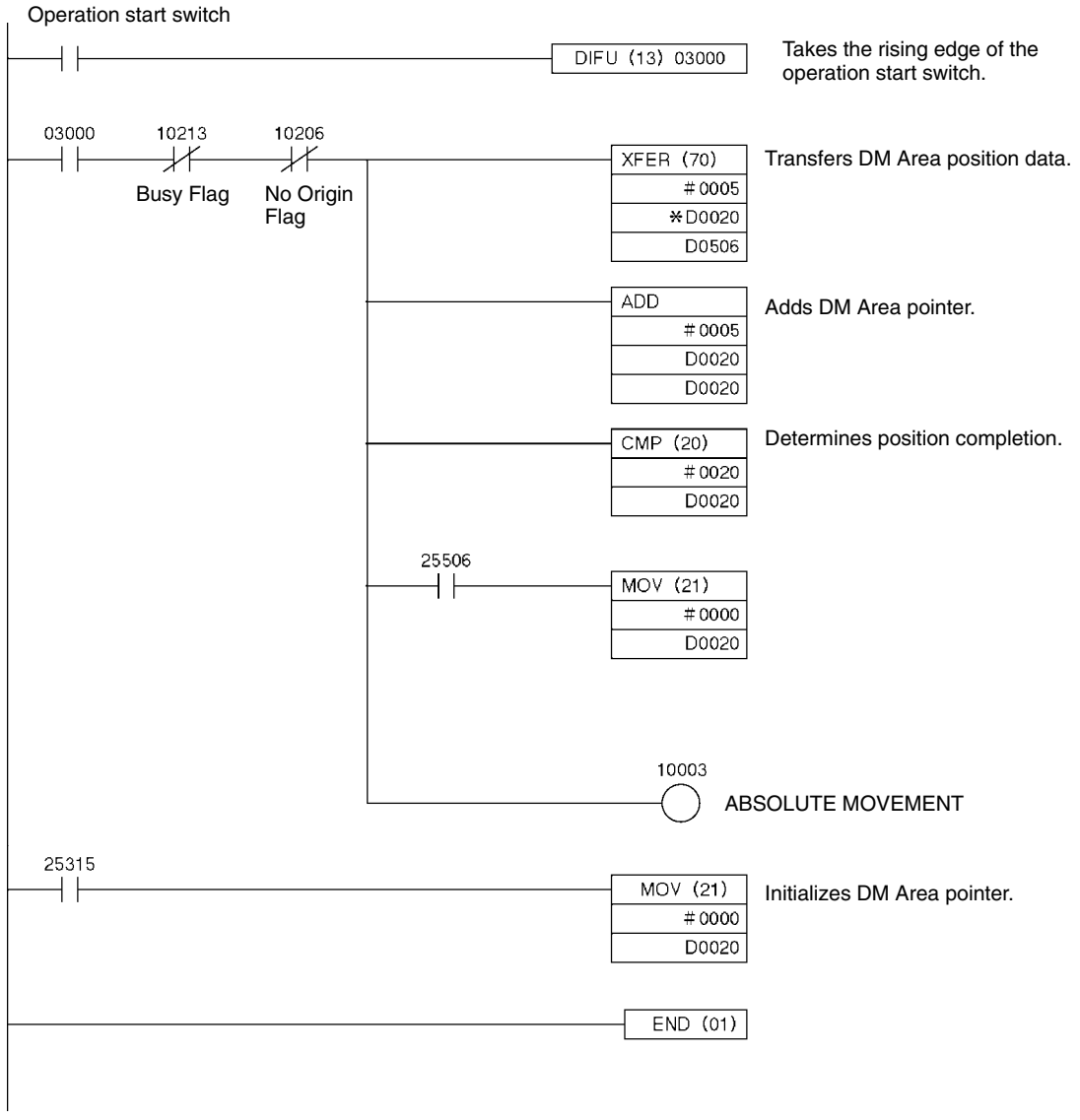

10-3-2 Inching

Overview

- Can be applied to manual operation (inching) using Relative Movement under direct operation.
- Direct operation sets the data required for each positioning operation and starts the positioning, so this simplifies positioning instructions from the PC ladder program.

Operation Example

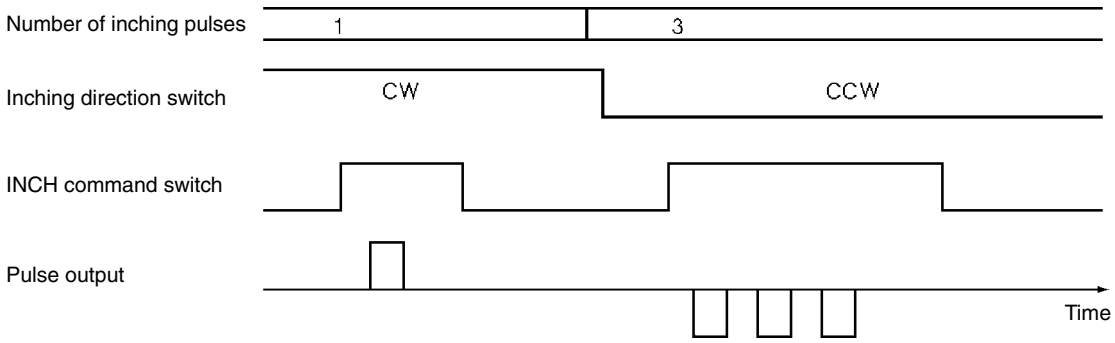

1, 2, 3...

1. Set the number of inching pulses and the inching direction.
2. When the INCH command switch is turned ON, the designated number of pulses are output in the specified direction on the X axis, and the positioning is stopped.
   (The pulse output speed at this time is the speed designation specified for direct operation.)

Setting the Unit

Unit Number: Unit #0
Unit Used: NC113

Data Memory Settings

DM	Setting	Contents of setting	DM	Setting	Contents of setting
1000	000D	Sets the operating data area to DM 0500 onwards.	1014	****	Acceleration/deceleration curve: trapezoid
1001	0500		1015	0000	Acceleration time (from 0 to maximum speed): 0 ms
1002	0001	Not mounted to a Slave. DM 1004 onwards used for parameter transfer	1016	0000	
1003	****	Reserved	1017	0000	Deceleration time (from maximum speed to 0): 0 ms
1004	****	I/O setting	1018	0000	
1005	***#	Operation mode/origin search	1019	****	Positioning monitor time
1006	0500	Maximum speed: 500 pps	1020	****	CCW software limit
1007	****	Initial speed	1021	****	
1008	0500	Origin search high speed	1022	****	CW software limit
1009	0100	Origin search proximity speed	1023	****	
1010	****	Origin compensation value	1024	****	Reserved
1011	****		1025	****	
1012	****	Backlash compensation value	1026	****	
1013	****	Backlash compensation speed	1027	****	

Note Set the items marked in the table with asterisks (*) to their factory settings. Set the operation mode of those items marked in the table with a hash mark (#) to accord with the motor and driver.

Designation of the Operating Data Area

The operating data area is allocated to DM 0500 through DM 0533 by the data memory settings. No prior settings are needed for the operating data area because the data is set in the program.

Data Settings

Axis Parameters

The values for DM 1004 onwards are transferred when the power in turned on (or at restart).

Positioning Sequences

This data area is not used with direct operation. It should be left entirely at the factory settings.

Speeds

This data area is not used with direct operation. It should be left entirely at the factory settings.

Positions

This data area is not used with direct operation. It should be left entirely at the factory settings.

Acceleration and Deceleration Times

This data area is not used with direct operation. It should be left entirely at the factory settings.

Dwell Times

Dwell times are not used in these programs, so this data area needs to be set completely to the factory settings.

Zones

Zones are not used in these programs, so this data area needs to be set completely to the factory settings.

Program

D 0000: Number of inching pulses

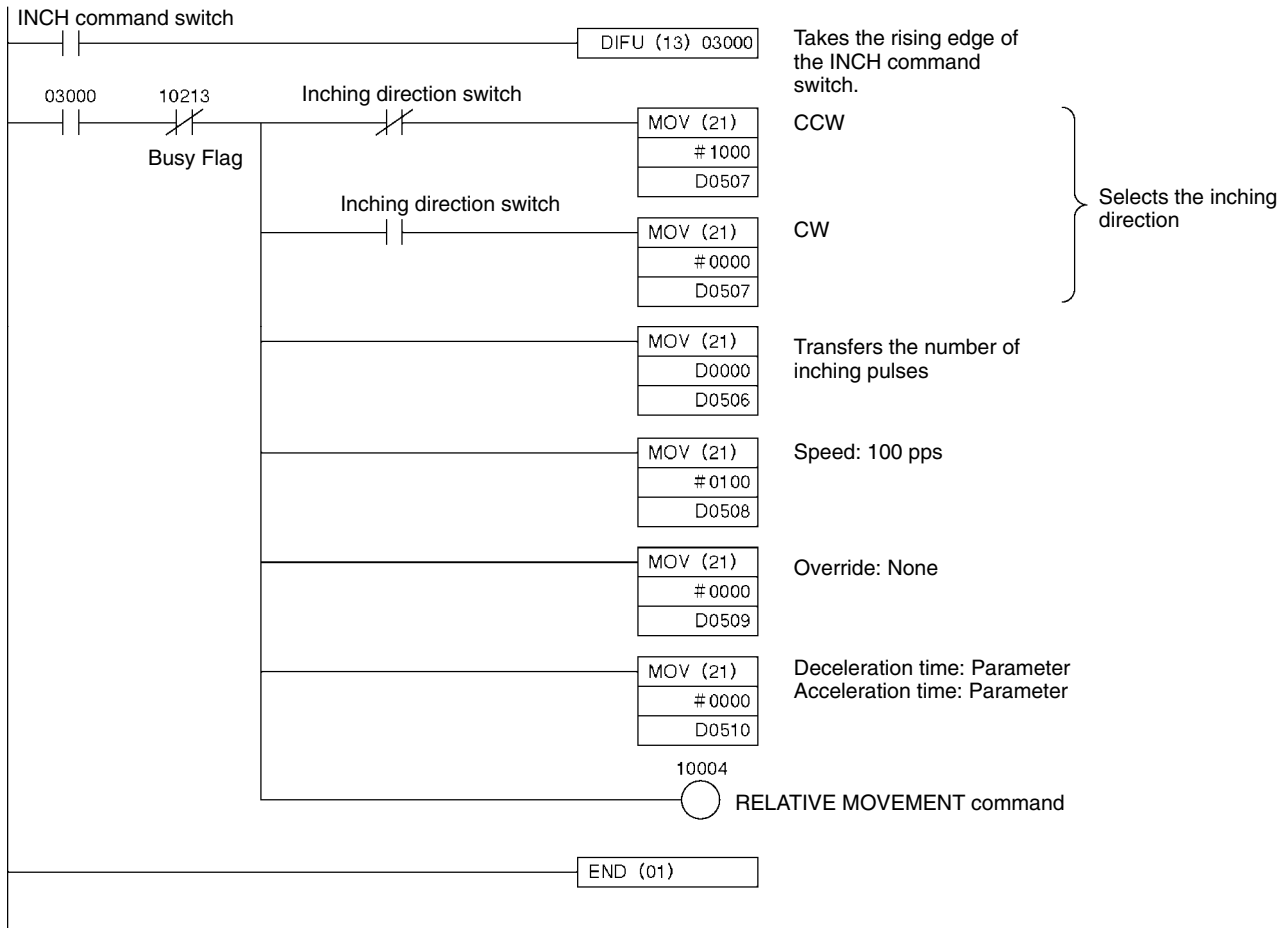

10-4 Linear Interpolation

10-4-1 Two-axis Linear Interpolation

Overview

- Used for carrying out positioning on multiple active axes.
- The only interpolation method available is linear interpolation.
- The positioning sequence for the active axis designates the axes to be used in interpolation.

Operation Example

In the following example, the program carries out an automatic interpolation operation, then returns to the origin and stops.

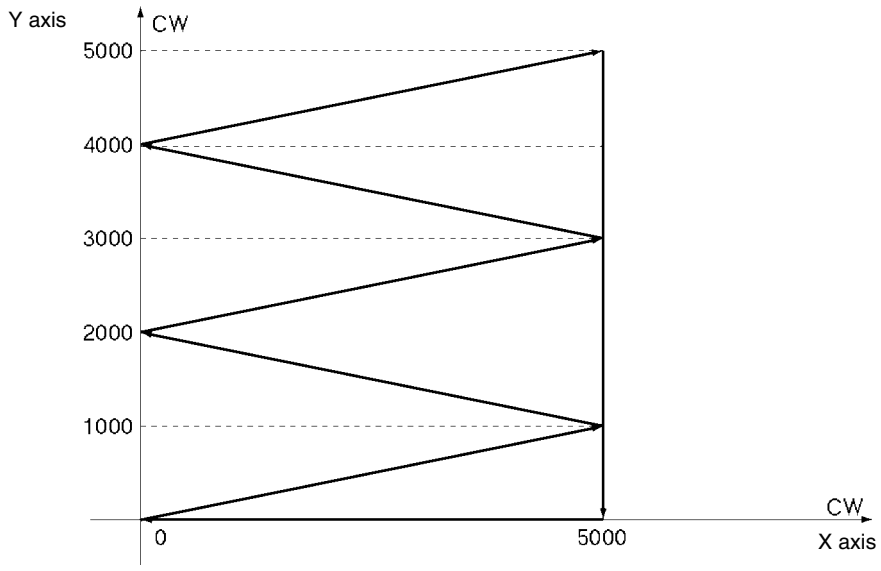

When the operation start switch is turned ON, the following positioning is automatically executed in the given order, using linear interpolation, and then positioning is stopped.

(X,Y) = (5000, 1000) → (0, 2000) → (5000, 3000) → (0, 4000) → (5000, 5000) → (5000, 0) → (0, 0)

The interpolation speed at this time is 500 pps.
(Set the origin of both the X and Y axes beforehand to “0” by either conducting an origin search or executing PRESENT POSITION CHANGE).

Setting the Unit

Unit Number: Unit #0
Unit Used: NC213

Data Memory Settings

DM	Setting	Contents of setting	DM	Setting	Contents of setting
1000	000D	Sets the operating data area to DM 0500 onwards	1024	****	Reserved
1001	0500		1025	****	
1002	0001	Not mounted to a Slave. DM 1004 onwards used for parameter transfer	1026	****	
1003	****	Reserved	1027	****	
1004	****	I/O setting	1028	****	I/O setting
1005	***#	Operation mode/origin search	1029	****	Operation mode/origin search
1006	0500	Maximum speed: 500 pps	1030	0500	Maximum speed: 500 pps
1007	****	Initial speed	1031	****	Initial speed
1008	0500	Origin search high speed	1032	0500	Origin search high speed
1009	0100	Origin search proximity speed	1033	0100	Origin search proximity speed
1010	****	Origin compensation value	1034	****	Origin compensation value
1011	****		1035	****	
1012	****	Backlash compensation value	1036	****	Backlash compensation value
1013	****	Backlash compensation speed	1037	****	Backlash compensation speed
1014	****	Acceleration/deceleration curve: trapezoid	1038	****	Acceleration/deceleration curve: trapezoid
1015	0010	Acceleration time (from 0 to maximum speed): 10 ms	1039	0010	Acceleration time (from 0 to maximum speed): 10 ms
1016	0000		1040	0000	
1017	0010	Deceleration time (from maximum speed to 0): 10 ms	1041	0010	Deceleration time (from maximum speed to 0): 10 ms
1018	0000		1042	0000	
1019	****	Positioning monitor time	1043	****	Positioning monitor time
1020	****	CCW software limit	1044	****	CCW software limit
1021	****		1045	****	
1022	****	CW software limit	1046	****	CW software limit
1023	****		1047	****	

Note Set the items marked in the table with asterisks (*) to their factory settings. Set the operation mode of those items marked in the table with a hash mark (#) to accord with the motor and driver.

Designation of the Operating Data Area

The operating data area is allocated to DM 0500 through DM 0533 by the data memory settings. In this program example, the operating data area is not set because it is not used.

Data Settings

Axis Parameters

The values for DM 1004 onwards are transferred when the power is turned on (or at restart).

Positioning Sequences

Address	Setting	Contents of setting
1000	3001	Sequence #0 X, Y axis designation Completion code: automatic Dwell time #0/Acceleration time #0/ deceleration time #0 Initial speed #1/Target speed #0
1001	0000	
1002	0100	
1003	3001	Sequence #1 X, Y axis designation Completion code: automatic Dwell time #0 Acceleration time #0 Deceleration time #0 Initial speed #1 Target speed #0
1004	0000	
1005	0100	
1006	3001	Sequence #2 X, Y axis designation Completion code: automatic Dwell time #0 Acceleration time #0 Deceleration time #0 Initial speed #1 Target speed #0
1007	0000	
1008	0100	
1009	3001	Sequence #3 X, Y axis designation Completion code: automatic Dwell time #0 Acceleration time #0 Deceleration time #0 Initial speed #1 Target speed #0
1010	0000	
1011	0100	
1012	3001	Sequence #4 X, Y axis designation Completion code: automatic Dwell time #0 Acceleration time #0 Deceleration time #0 Initial speed #1 Target speed #0
1013	0000	
1014	0100	
1015	3001	Sequence #5 X, Y axis designation Completion code: automatic Dwell time #0 Acceleration time #0 Deceleration time #0 Initial speed #1 Target speed #0
1016	0000	
1017	0100	
1018	3003	Sequence #6 X, Y axis designation Completion code: bank end Dwell time #0 Acceleration time #0 Deceleration time #0 Initial speed #1 Target speed #0
1019	0000	
1020	0100	

Note Addresses other than the above should be set to their factory values.

Speeds

Address	Setting	Contents of setting
1300	0500	Speed #0 500 pps
1301	0000	Speed #1 0 pps

Note Addresses other than the above should be set to their factory values.

Positions

Address	Setting	Contents of setting	
1400	5000	Position #0	CW/absolute/5000 pulses
1401	0000		
1402	0000	Position #1	CW/absolute/0000 pulses
1403	0000		
1404	5000	Position #2	CW/absolute/5000 pulses
1405	0000		
1406	0000	Position #3	CW/absolute/0000 pulses
1407	0000		
1408	5000	Position #4	CW/absolute/5000 pulses
1409	0000		
1410	5000	Position #5	CW/absolute/5000 pulses
1411	0000		
1412	0000	Position #6	CW/absolute/0000 pulses
1413	0000		

Note Addresses other than the above should be set to their factory values.

Address	Setting	Contents of setting	
2400	1000	Position #0	CW/absolute/1000 pulses
2401	0000		
2402	2000	Position #1	CW/absolute/2000 pulses
2403	0000		
2404	3000	Position #2	CW/absolute/3000 pulses
2405	0000		
2406	4000	Position #3	CW/absolute/4000 pulses
2407	0000		
2408	5000	Position #4	CW/absolute/5000 pulses
2409	0000		
2410	0000	Position #5	CW/absolute/0000 pulses
2411	0000		
2412	0000	Position #6	CW/absolute/0000 pulses
2413	0000		

Note Addresses other than the above should be set to their factory values.

Acceleration and Deceleration Times

Acceleration and deceleration times use the values set in the parameter area. Make sure the data in this area is all set to the factory settings.

Dwell Times

Dwell times are not used in these programs, so this data area needs to be set completely to the factory settings.

Zones

Zones are not used in these programs, so this data area needs to be set completely to the factory settings.

Program

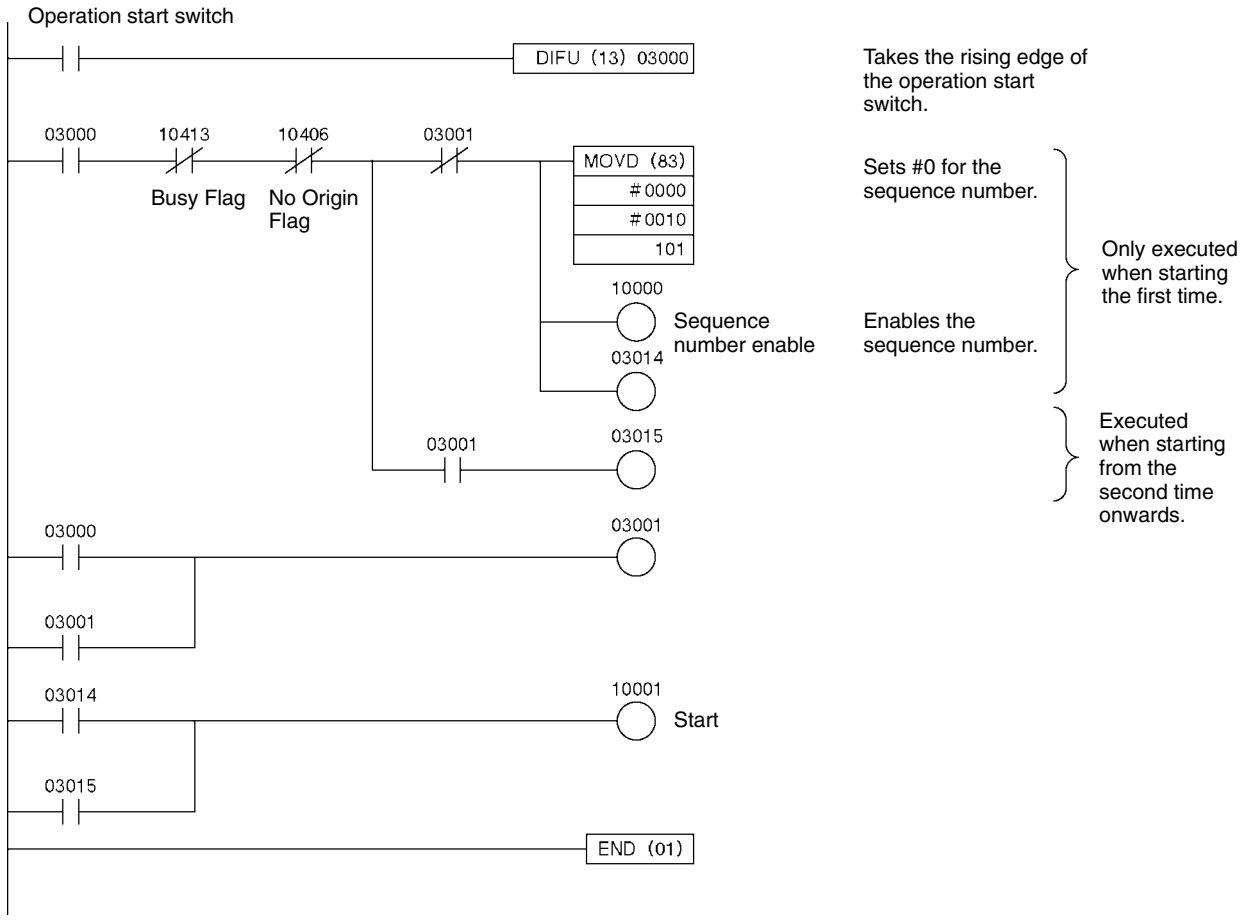
Operation start switch
DIFU (13) 03000
Takes the rising edge of the operation start switch.
03000
10413
10406
03001
Busy Flag
No Origin Flag
MOVD (83)
#0000
#0010
101
Sets #0 for the sequence number.
10000
Sequence number enable
03014
Enables the sequence number.
Only executed when starting the first time.
03001
03015
Executed when starting from the second time onwards.
03000
03001
03001
03014
10001
Start
03015
END (01)

10-5 Origin Search

10-5-1 Origin Search Using Limit Input

Overview

- An origin search can be carried out in single-direction mode using the CW/CCW limit input signal as an origin proximity input signal.
- The origin is established by the first origin input signal after the CW or CCW limit input switch is turned from ON to OFF.

Operation Example

The following example is an origin search operation in single-direction mode using the CCW limit input signal. In this example, the CCW limit input is an N.C. contact. With an N.O. contact, the logic is reversed.

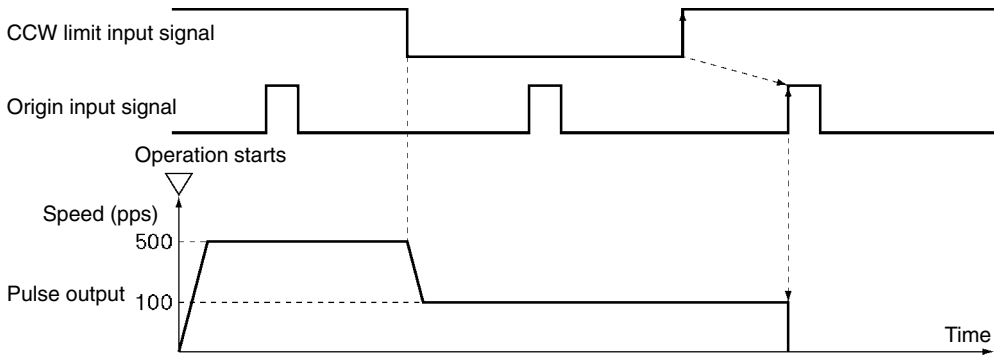

1, 2, 3...

1. When the operation start switch is turned ON, the origin search starts with an origin search high speed of 500 pps in the CW direction on the X axis.
2. When the CCW limit input signal is turned ON, the program decelerates to an origin search proximity speed of 100 pps.
3. When the first origin input signal is turned on after the CCW limit input signal is turned ON, the pulse output is stopped and the origin is established.

Setting the Unit

Unit Number: Unit #0
Unit Used: NC113

Data Memory Settings

DM	Setting	Contents of setting	DM	Setting	Contents of setting
1000	000D	Sets the operating data area to DM 0500 onwards	1014	****	Acceleration/deceleration curve: trapezoid
1001	0500		1015	0005	Acceleration time (from 0 to maximum speed): 5 ms
1002	0001	Not mounted to a Slave. DM 1004 onwards used for parameter transfer	1016	0000	
1003	****	Reserved	1017	0005	Deceleration time (from maximum speed to 0): 5 ms
1004	****	I/O setting	1018	0000	
1005	0321	CW/limit input used/single direction mode/mode 1	1019	****	Positioning monitor time
1006	0500	Maximum speed: 500 pps	1020	****	CCW software limit
1007	****	Initial speed	1021	****	
1008	0500	Origin search high speed	1022	****	CW software limit
1009	0100	Origin search proximity speed	1023	****	
1010	****	Origin compensation value	1024	****	Reserved
1011	****		1025	****	
1012	****	Backlash compensation value	1026	****	
1013	****	Backlash compensation speed	1027	****	

Note Set the items marked in the table with asterisks (*) to their factory settings. Set the operation mode of those items marked in the table with a hash mark (#) to accord with the motor and driver.

Designation of the Operating Data Area

The operating data area is allocated to DM 0500 through DM 0533 by the data memory settings. No prior settings are needed for the operating data area because data is set during programming.

Data Settings

Axis Parameters
The values for DM 1004 onwards are transferred when the power in turned on (or at restart).

Positioning Sequences
This data area is not used for origin search. It should be left entirely at the factory settings.

Speeds
This data area is not used for origin search. It should be left entirely at the factory settings.

Positions
This data area is not used for origin search. It should be left entirely at the factory settings.

Acceleration and Deceleration Times
This data area is not used for origin search. It should be left entirely at the factory settings.

Dwell Times
Dwell times are not used for origin search, so this data area needs to be set completely to the factory settings.

Zones
Zones are not used for origin search, so this data area needs to be set completely to the factory settings.

Program

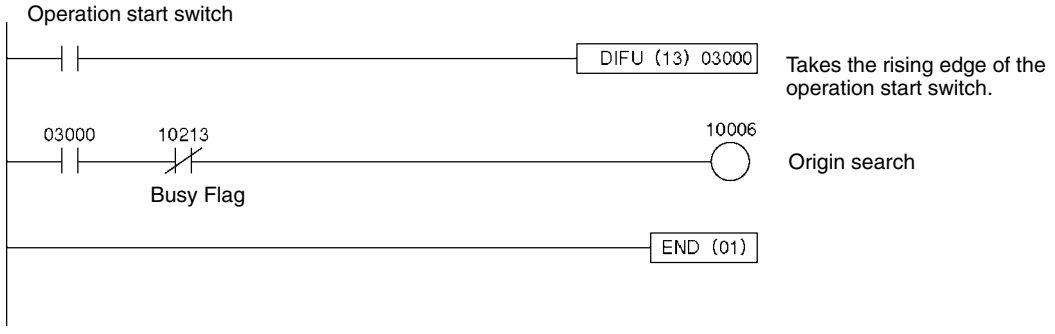

10-6 Override

10-6-1 Changing Speed During Continuous Output

Overview

- Override can be used to change the speed during pulse output.
- The target speed is determined by the override coefficient set in the operating data area.
- In order to use the actual target speed that has been set, either disable the override or set it to 100%.

Operation Example

The following is an example of changing the speed with override during continuous operation.

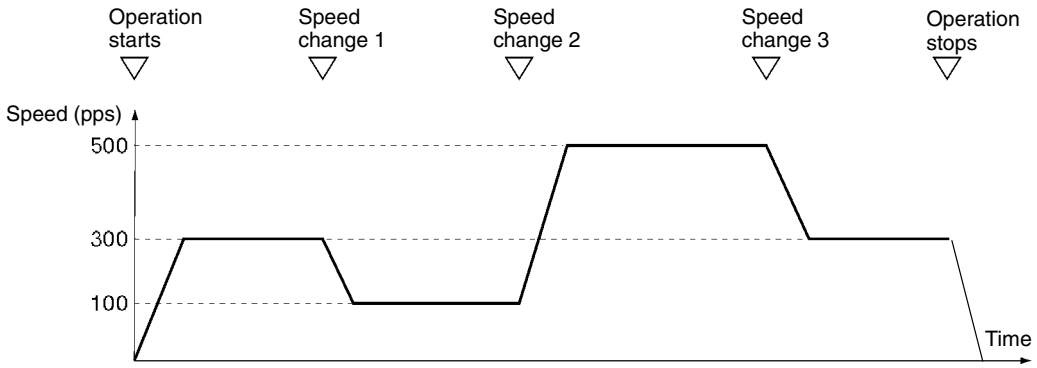

1, 2, 3...

1. When the operation start switch is turned ON, continuous output is executed at a speed of 300 pps CW on the X axis.
2. When speed change switch 1 is turned ON, the continuous output decelerates to a speed of 150 pps.
3. When speed change switch 2 is turned ON, the continuous output accelerates to a speed of 500 pps.
4. When speed change switch 3 is turned ON, the output continues at a speed of 300 pps.
5. When the operation start switch is turned OFF, the output of X axis stops.

Setting the Unit

Unit Number: Unit #0
Unit Used: NC113

Data Memory Settings

DM	Setting	Contents of setting	DM	Setting	Contents of setting
1000	000D	Set the operating data area to DM 0500 onwards	1014	****	Acceleration/deceleration curve: trapezoid
1001	0500		1015	0020	Acceleration time (from 0 to maximum speed): 20 ms
1002	0001	Not mounted to a Slave. DM 1004 onwards used for parameter transfer	1016	0000	
1003	****	Reserved	1017	0020	Deceleration time (from maximum speed to 0): 20 ms
1004	****	I/O setting	1018	0000	
1005	***#	Operation mode/origin search	1019	****	Positioning monitor time
1006	0500	Maximum speed: 500 pps	1020	****	CCW software limit
1007	****	Initial speed	1021	****	
1008	0500	Origin search high speed	1022	****	CW software limit
1009	0100	Origin search proximity speed	1023	****	
1010	****	Origin compensation value	1024	****	Reserved
1011	****		1025	****	
1012	****	Backlash compensation value	1026	****	
1013	****	Backlash compensation speed	1027	****	

Note Set the items marked in the table with asterisks (*) to their factory settings. Set the operation mode of those items marked in the table with a hash mark (#) to accord with the motor and driver.

Designation of the Operating Data Area

The operating data area is allocated to DM 0500 through DM 0533 by the data memory settings. No prior settings are required for the operating data area because the data is set in the program.

Data Settings

Axis Parameters

The values for DM 1004 onwards are transferred when the power is turned on (or at restart).

Positioning Sequences

This data area is not used with direct operation. It should be left entirely at the factory settings.

Speeds

This data area is not used with direct operation. It should be left entirely at the factory settings.

Positions

This data area is not used with direct operation. It should be left entirely at the factory settings.

Acceleration and Deceleration Times

This data area is not used with direct operation. It should be left entirely at the factory settings.

Dwell Times

Dwell times are not used in these programs, so this data area needs to be set completely to the factory settings.

Zones

Zones are not used in these programs, so this data area needs to be set completely to the factory settings.

Program

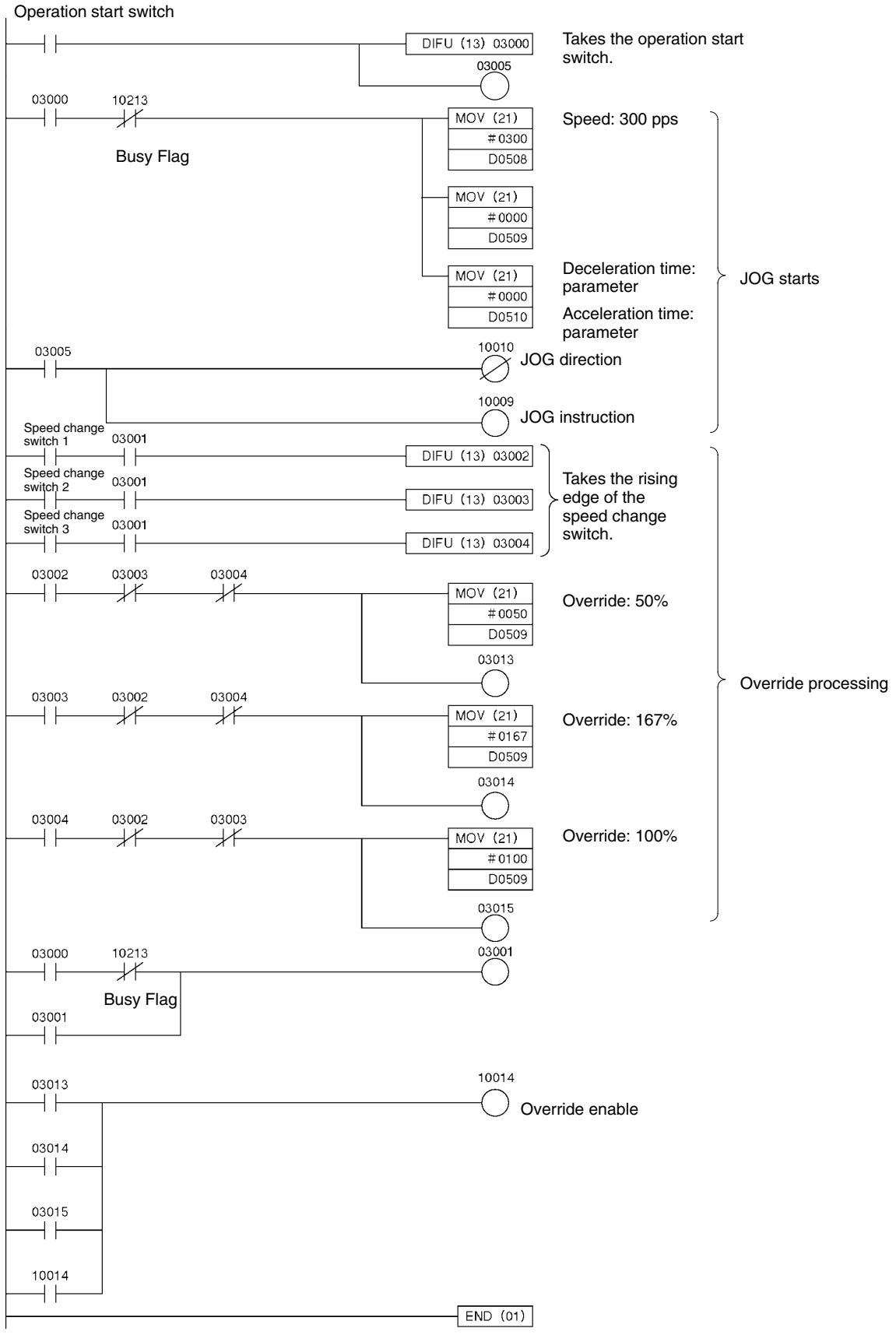
Operation start switch
DIFU (13) 03000
Takes the operation start switch.
03005
03000
10213
Busy Flag
MOV (21)
#0300
D0508
Speed: 300 pps
MOV (21)
#0000
D0509
MOV (21)
#0000
D0510
Deceleration time: parameter
Acceleration time: parameter
JOG starts
03005
10010
JOG direction
10009
JOG instruction
Speed change switch 1
03001
DIFU (13) 03002
Speed change switch 2
03001
DIFU (13) 03003
Speed change switch 3
03001
DIFU (13) 03004
Takes the rising edge of the speed change switch.
03002
03003
03004
MOV (21)
#0050
D0509
Override: 50%
03013
Override processing
03003
03002
03004
MOV (21)
#0167
D0509
Override: 167%
03014
03004
03002
03003
MOV (21)
#0100
D0509
Override: 100%
03015
03000
10213
03001
Busy Flag
03001
03013
10014
Override enable
03014
03015
10014
END (01)

10-7 Transferring and Saving Data

10-7-1 Copying Data

Overview

- Reading and writing data is carried out according to the number of transfer words, the transfer source word, and the transfer destination address set in the operating data area.
- This operation can also be used for reading data from a Unit to which data has already been transferred, and for backing the data up or copying it to another Position Control Unit.

Operation Example

X-axis operating data from an NC213 PCU which has already transferred the operating data for two axes is read into the DM area. The operating data set for the DM area is written to an NC113 PCU and saved. By combining these two operations, the NC213's X-axis data can be copied to the NC113.

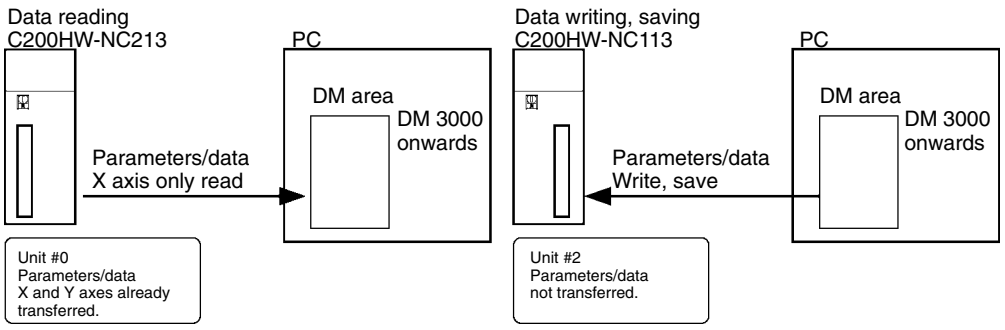

READ DATA

1, 2, 3...

1. Mount the NC213 (Unit #0) to the Programmable Controller's CPU Rack. Make sure that the data and parameters for both the X and Y axes needed for the operation of the NC213 (Unit #0) are all transferred.
2. When the operation start switch is turned ON, the parameters and data for the X axis of the NC213 are read into DM 3000 through DM 3694 at the PC.
3. When work bit 03010 turns ON the read operation is completed.

WRITE DATA and SAVE DATA

1, 2, 3...

1. Mount the NC113 (Unit #2) to the Programmable Controller's CPU Rack. Set the parameters and data for the X axis of the NC113 in DM 3000 through DM 3694 of the PC.
2. When the operation start switch is turned ON, the parameters and data in DM 3000 through DM 3694 are written to the NC113 and then saved.
3. When work bit 03014 turns ON, the WRITE DATA and SAVE DATA operations are completed.

Setting the Unit

READ DATA

Unit Number: Unit #0
Unit Used: C200HW-NC213

WRITE DATA and SAVE DATA

Unit Number: Unit #2
Unit Used: C200HW-NC113

Data Memory Settings

READ DATA
C200HW-NC213

DM	Setting	Contents of setting
1000	000D	Sets the operating data area to DM 0500 onwards.
1001	0500	
1002	0000	Not mounted to Slave. No parameters transferred.

The parameters for each axis are read from the flash memory of the Position Control Unit. Transfer them in advance to the Position Control Unit and then save them.

WRITE DATA and SAVE DATA
C200HW-NC113

DM	Setting	Contents of setting
1200	000D	Set the operating data area to DM 0600 onwards.
1201	0600	
1202	0000	Not mounted to Slave. No parameters transferred.

Designation of the Operating Data Area

The operating data area is set during programming and therefore no setting is necessary beforehand.

Data Settings

READ DATA

- Axis Parameters
- Positioning Sequences
- Speeds
- Positions
- Acceleration and Deceleration Times
- Dwell Times
- Zones

Transfer the data needed for the operation beforehand to the Position Control Unit for both the X and Y axes, and save it in the flash memory.

WRITE DATA and SAVE DATA

The data in DM 3000 through DM 3694 is transferred to the Position Control Unit, so set all the data such as the axis parameters, positioning sequences, speeds and so on, in this DM area.

Program

READ DATA

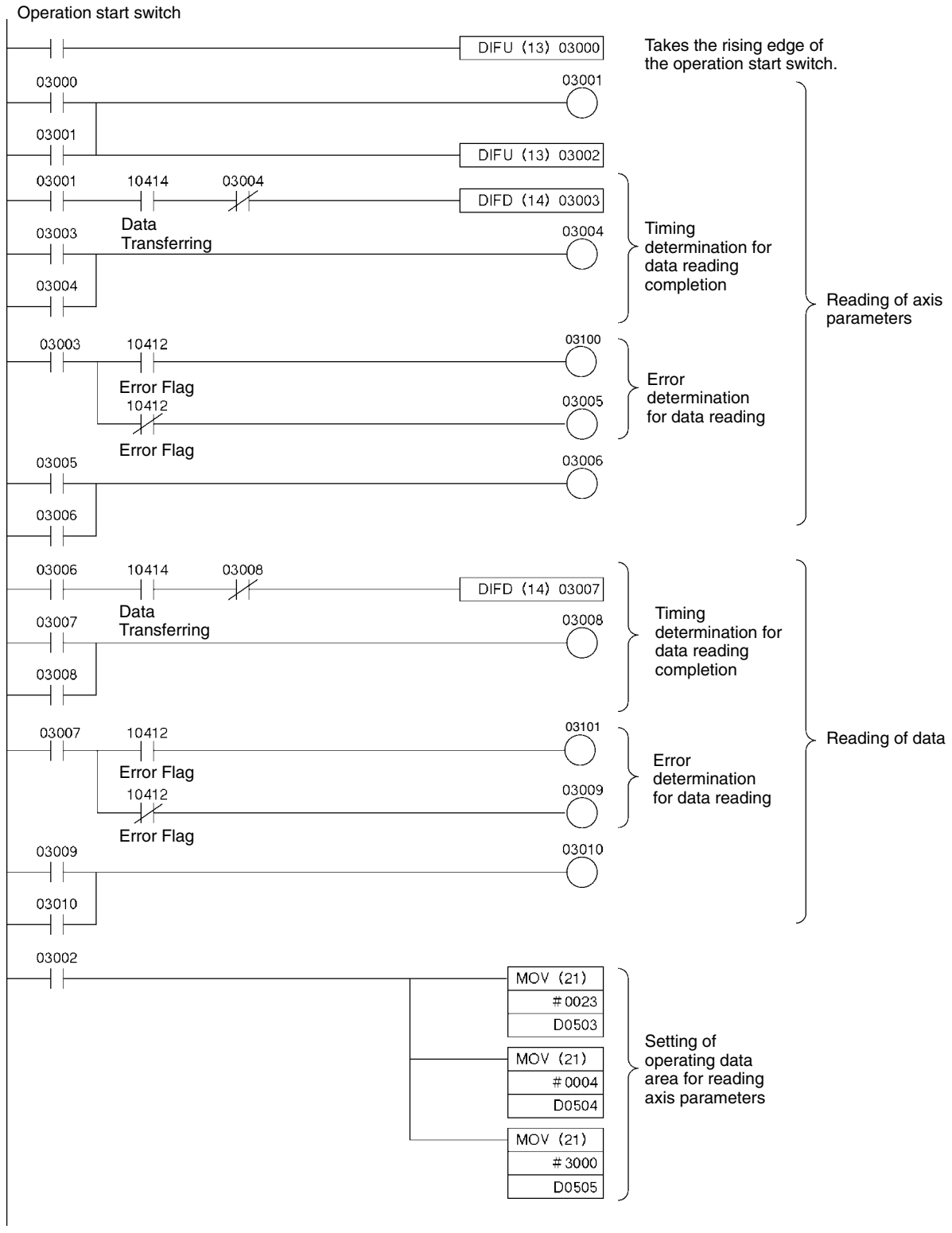

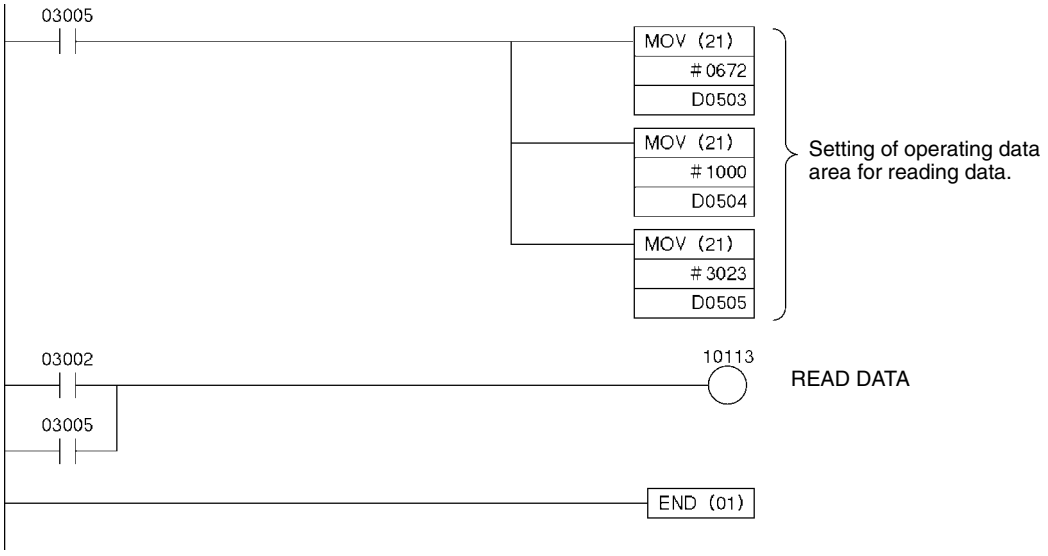
03005
MOV (21)
#0672
D0503
MOV (21)
#1000
D0504
MOV (21)
#3023
D0505
Setting of operating data area for reading data.
03002
03005
10113
READ DATA
END (01)

WRITE DATA and SAVE DATA

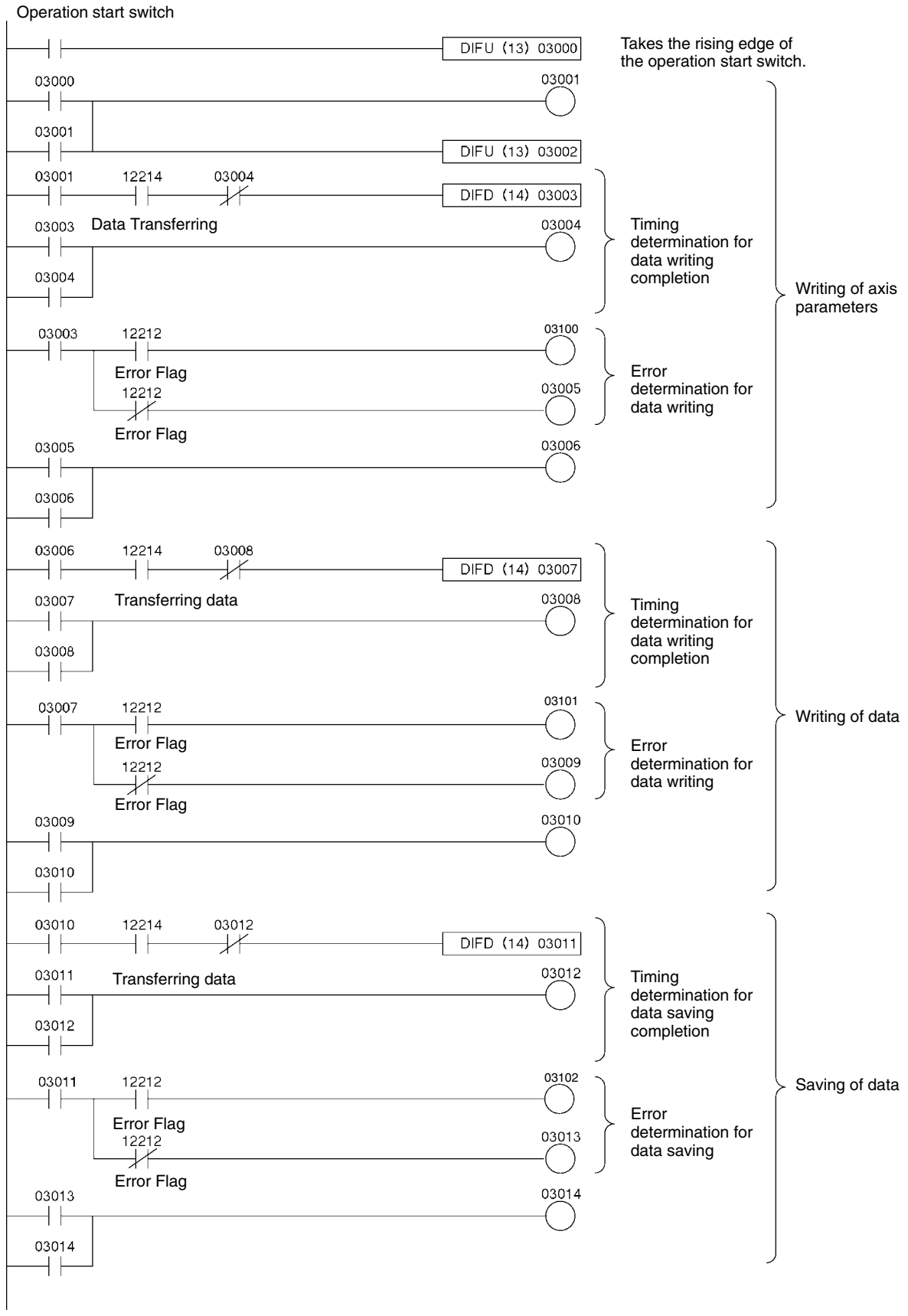

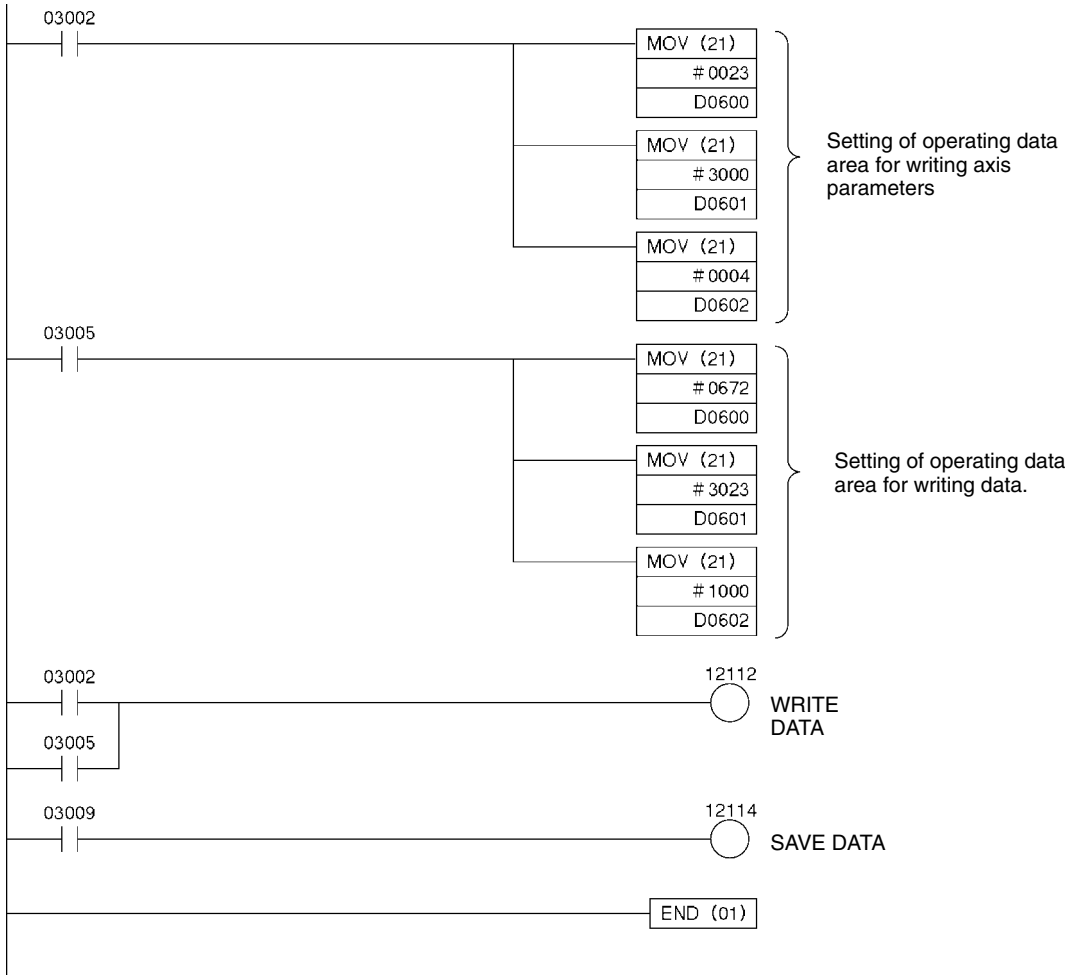
03002
MOV (21)
#0023
D0600
MOV (21)
#3000
D0601
MOV (21)
#0004
D0602
Setting of operating data area for writing axis parameters
03005
MOV (21)
#0672
D0600
MOV (21)
#3023
D0601
MOV (21)
#1000
D0602
Setting of operating data area for writing data.
03002
03005
12112
WRITE DATA
03009
12114
SAVE DATA
END (01)

SECTION 11
Troubleshooting

This section describes how to diagnose and correct errors that can occur during operation.

11-1 Introduction 228
11-2 LED Error Indicators 230
11-3 Reading Error Codes 231
11-4 Error Code Lists 232
11-4-1 Data Check at Startup 232
11-4-2 Command Execution Check 235
11-5 CPU Error Indicators 243
11-5-1 Special I/O Unit Error List 243
11-5-2 Useful Flags and Control Bits 244

11-1 Introduction

The errors detected by the Position Control Unit can be divided broadly into the following categories.

Startup Errors

The following checks are performed when the Unit is turned on or restarted.

- Hardware check
- Common parameters check
- Flash memory check
- Axis parameters check

The error status is retained when an error occurs. Refer to the tables for the error-clearing procedure and clear the error.

When two or more errors have occurred, the next error will be detected when the first error is cleared. Repeat the error-clearing procedure until all of the errors have been cleared. When an error hasn't been cleared, all commands will be invalid except for the all-axis data transfer and data save operations.

Instruction Execution Errors

An error check is performed when a command is executed or a data irregularity is detected during operation. An error check is also performed when a software limit, emergency stop, or limit signal is detected.

Refer to the tables in *11-4 Error Code Lists* for details on the Unit operation when an error has occurred. If an emergency stop or limit signal error is detected when an error has occurred, an emergency stop or limit signal error will be output. Refer to the tables for the error-clearing procedure and clear the error.

Note A command such as START can be performed after removing the cause of the command execution error. Errors occurring during data transfers from the SYSMAC-NCT Support Tool or by the IORD/IOWR instructions can be cleared only when the transfer was completed normally.

Troubleshooting Flowcharts

Error type	Flowchart	Reference
Startup error	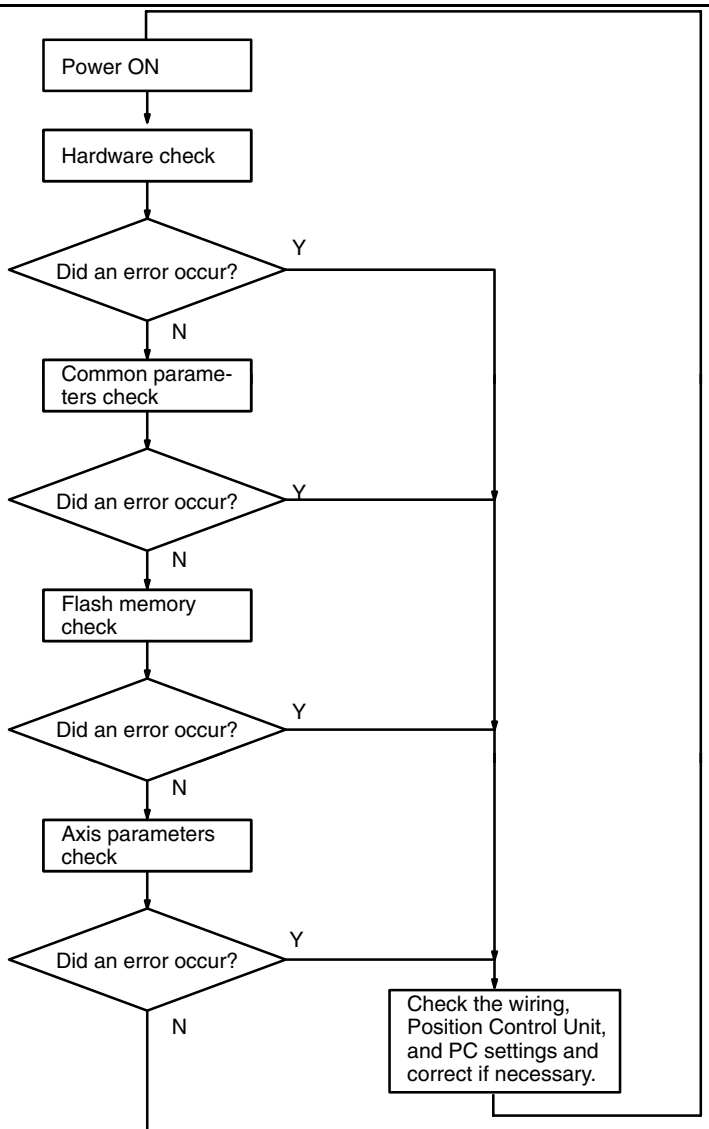	See *11-4-1 Data Check at Startup*.
Instruction execution error	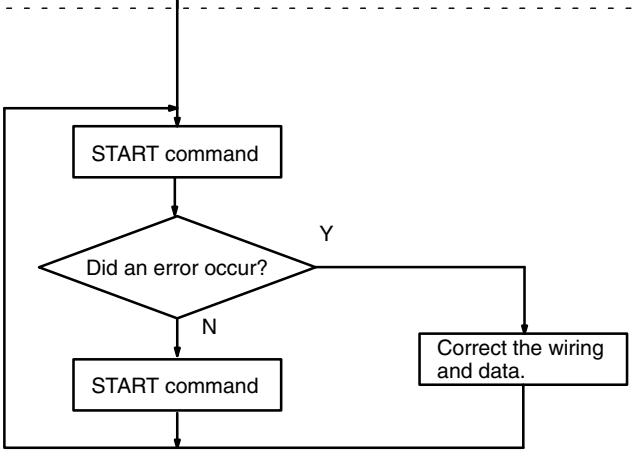	See *11-4-2 Instruction Execution Check*.

11-2 LED Error Indicators

The status of the LED indicators on the front of the Position Control Unit can be used to diagnose errors as shown in the following table. The status of the indicators is as follows:

○: ON ☆: Flashing ●: OFF

(For the "data error" and "external sensor input," the corresponding axis will be flashing.)

C200HW-NC413

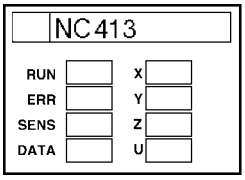

C200HW-NC213

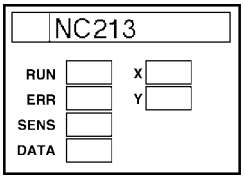

C200HW-NC113

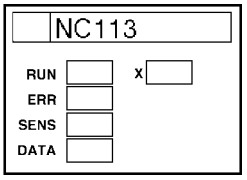

LED								Error	Cause	Remedy
RUN	ERR	SENS	DATA	X	Y	Z	U			
●	●	●	●	●	●	●	●	PC power supply OFF	The PC's power supply is off.	Turn on the PC's power supply.
								Not mounted to Backplane	The Unit isn't mounted securely to the PC Backplane.	Mount the Unit to the Backplane securely.
								CPU standby	One of the Special I/O Units is faulty.	The faulty Unit will be indicated with a "$∗∗" character when the I/O Table Read operation is performed. Replace the faulty Unit.
								I/O Unit over	The same unit number has been set on two Special I/O Units or an invalid unit number has been set.	Change the unit number settings to eliminate any duplication or invalid settings.
								I/O Bus error	The PCU or I/O Connecting Cable isn't connected correctly.	Check to be sure that the PCU is correctly mounted to the Backplane. Check the I/O Connecting Cables to each Rack.
								CPU Bus Unit error	Refreshing with the PC couldn't be performed correctly. The Position Control Unit is mounted to a Slave Rack, but the parameter designation is set to "00."	After eliminating the cause of the error, restart the Unit with the corresponding Restart Bit in the SR or AR area. Set the designation to "01" and restart the Unit.
								I/O setting error	An I/O table verification error occurred.	Register the I/O table again. If the error recurs, replace the Unit.
●	○	○	○	–	–	–	–	Internal component faulty	A component within the Position Control Unit failed.	Restart the Unit by turning the power on again or toggling the corresponding Restart Bit. If the error recurs, replace the Unit.
○	●	●	●	–	–	–	–	Normal operation	---	---
○	○	●	●	–	–	–	–	Error occurred	An error other than a data error occurred during external sensor input.	Check the error code and correct the error.

LED								Error	Cause	Remedy
RUN	ERR	SENS	DATA	X	Y	Z	U			
○	○	○	●	–	–	–	–	External sensor input	An emergency stop input or CCW/CW limit input signal was received.	Check the error code, verify that it is safe to proceed, and correct the error.
○	○	●	○	–	–	–	–	Data error	A data inconsistency such as an out-of-range parameter occurred.	Check the error code and correct the error.
○	○	○	○	–	–	–	–	External sensor input data error	An external sensor input and data error occurred simultaneously.	The last error that was detected will be output for the error code.
○	☆	☆	☆	☆	●	●	●	Parameters destruction	The parameters saved in flash memory have been lost.	The PCU's axis parameters and data are all returned to their default values or the values that had been saved prior to the last save to flash memory. After transferring the parameters again for all axes, save the parameters and either turn the power off and on again or restart the Unit.
○	☆	☆	☆	●	●	●	●	Data destruction	The data saved in flash memory have been lost.	
○	☆	☆	●	●	●	●	●	Operating data area specification error	The specification of the common parameters operating data area is incorrect.	After correcting the common parameters data, either turn the power off and on again or restart the Unit.
○	☆	●	●	●	●	●	●	Operating data area address specification error	The specification of the operating data area's leading address is incorrect.	

11-3 Reading Error Codes

When an error has occurred, an error flag will be turned on in the operating memory area and the error code will be input in the operating data area. Check this code before proceeding with error processing.

The following tables show the allocation of bits for error flags and words for error codes.

Error Flags

Model	Operating memory area				Bit	Contents
	X axis	Y axis	Z axis	U axis		
NC413	n+8	n+11	n+14	n+17	12	1: Error occurred
NC213	n+4	n+7				0: No error
NC113	n+2					

Error Codes

Model	Operating data area				Bits	Contents
	X axis	Y axis	Z axis	U axis		
NC413	I+27	I+29	I+31	I+33	00 to 15	4-digit BCD error code
NC213	I+17	I+19				(A code of 0000 indicates normal operation.)
NC113	I+12					

11-4 Error Code Lists

11-4-1 Data Check at Startup

The following table shows the errors checked when power is turned on.

Group	Name	Code	Cause	Remedy
Data destruction	Parameters destruction	0001	When using the axis parameters saved in the Position Control Unit, the parameters saved in flash memory are lost.	In this condition, only the data transfer and data save operations can be performed. The Unit's axis parameters and data are all returned to their default values or the values that had been saved prior to the last save to flash memory. After transferring the parameters again for all axes, save the parameters and either turn the power off and on again or restart the Unit.
	Data destruction	0002	The following data saved in flash memory will be lost: Zones, positioning sequences, speeds, acceleration/deceleration data, positions, and dwell times.	
Common parameters	Operating data area specification error	0010	The specification of the operating data area is incorrect.	In this condition, only the data transfer and data save operations can be performed. All of the axes' axis parameters and all data will be returned to their default values. After correcting the common parameters data, turn the power off and on or restart the Unit.
	Operating data area address specification error	0011	The specification of the operating data area's address is incorrect.	
	Mounting position specification error	0012	The Position Control Unit's mounting position isn't set to 00 or 01.	
	Parameter designation error	0013	The parameter designation isn't set to 00 or 01.	
Initial speed	Initial speed BCD error	1000	There is a BCD error in the axis parameter's initial speed or the setting exceeds the max. speed designation.	In this condition, only the data transfer and data save operations can be performed. All of the axes' axis parameters will be returned to their default values. After correcting the appropriate axis parameters, turn the power off and on or restart the Unit. Errors will be generated even when data is set incorrectly in axis parameters for unused axes. Be sure that data is set correctly for the axis parameters of all axes.
Maximum speed	Maximum speed BCD error	1010	There is a BCD error in the axis parameter's maximum speed or the setting is out-of-range (1 to 500K pps).	
Acceleration/ deceleration data	Acceleration time error	1310	There is a BCD error in the axis parameter's acceleration time or the setting is out-of-range (0 to 250 s).	
	Deceleration time error	1320	There is a BCD error in the axis parameter's deceleration time or the setting is out-of-range (0 to 250 s).	
	Acceleration/ Deceleration curve error	1330	The axis parameter's acceleration/deceleration curve setting isn't 0 or 1.	

Group	Name	Code	Cause	Remedy
Acceleration/ deceleration data	Positioning monitor time	1332	There is a BCD error in the axis parameter's positioning monitor time.	In this condition, only the data transfer and data save operations can be performed. All of the axes' axis parameters will be returned to their default values. After correcting the appropriate axis parameters, turn the power off and on or restart the Unit. Errors will be generated even when data is set incorrectly in axis parameters for unused axes. Be sure that data is set correctly for the axis parameters of all axes.
Origin search	Origin compensation BCD error	1600	There is a BCD error in the axis parameter's origin compensation setting.	
	Origin search high speed error	1601	There is a BCD error in the axis parameter's origin search high speed or the setting is out-of-range (1 to 500K pps).	
	Origin search proximity speed error	1602	There is a BCD error in the axis parameter's origin search proximity speed or the setting is out-of-range (1 to 500K pps).	
	Origin search speed inconsistent	1603	The axis parameter's high-speed origin search speed is less than the low-speed origin search speed.	
	Operation mode selection error	1604	The axis parameter's origin search operating mode selection setting isn't 0, 1, 2, or 3.	
	Origin search operation error	1605	The axis parameter's origin search operation setting isn't 0, 1, or 2.	
	Origin search direction error	1606	The axis parameter's origin search direction setting isn't 0 or 1.	
	Origin detection method error	1607	Even though the axis parameter's origin search operation is set for other than single-direction mode, the origin detection method setting isn't 0, 1, or 2.	
Backlash compensation	Backlash compensation BCD error	1700	There is a BCD error in the axis parameter's backlash compensation setting.	
	Backlash compensation speed error	1710	There is a BCD error in the axis parameter's backlash compensation speed setting or the setting exceeds the maximum speed.	
Software limits	CW limit error	1800	There is a BCD error in the axis parameter's CW software limit setting.	
	CCW limit error	1801	There is a BCD error in the axis parameter's CCW software limit setting.	
Sensor inputs	Emergency stop input	6000	An emergency stop signal has been input.	After clearing the emergency stop input, execute RELEASE PROHIBIT. For a limit input, execute RELEASE PROHIBIT and feed in the opposite direction from the limit stop. Check the axis parameter's signal type setting (N.C. or N.O.). Errors will be generated even when the emergency stop input signal or limit input signals are input for unused axes. This, however, will not affect operation for axes other than the one(s) for which the signal was input.
	CW limit stop	6100	A CW limit input signal has been input.	
	CCW limit stop	6101	A CCW limit input signal has been received.	

Note Only the SYSMAC-NCT Units can recognize error codes 0001, 0002, 0010, 0011, 0012, and 0013.

11-4-2 Command Execution Check

Data Checks for Data-writing Commands

Item	Name	Code	Cause	Clearing method	Operation after error
Initial speed	Initial speed BCD error	1000	There is a BCD error in the axis parameter's initial speed or the setting exceeds the max. speed designation.	Transfer the data again after checking and correcting it.	When this error occurs during data transfer, the data transfer will be completed up to the data element transferred just before the error occurred. All operating axes will be decelerated to a stop.
Maximum speed	Maximum speed BCD error	1010	There is a BCD error in the axis parameter's max. speed or the setting is out-of-range (1 to 500K pps).		
Acceleration/ Deceleration data	Acceleration time error	1310	There is a BCD error in the axis parameter's acceleration time or the setting is out-of-range (0 to 250 s).		
	Acceleration time error	1311 to 1319	These codes indicate that acceleration times 1 to 9 have a BCD error or the setting is out-of-range (0 to 250 s).		
	Deceleration time error	1320	There is a BCD error in the axis parameter's deceleration time or the setting is out-of-range (0 to 250 s).		
	Deceleration time error	1321 to 1329	These codes indicate that deceleration times 1 to 9 have a BCD error or the setting is out-of-range (0 to 250 s).		
	Acceleration/ Deceleration curve error	1330	The axis parameter's acceleration/decel-eration curve setting isn't 0 or 1.		
	Positioning monitor time error	1332	There is a BCD error in the axis parameter's positioning monitor time.		
Speed data	Speed BCD error	1500 to 1599	These codes indicate that speed settings 00 to 99 have a BCD error or exceed the maximum speed. (The last two digits of the code indicate the speed data number where the error occurred.)		
Origin search	Origin compensation BCD error	1600	There is a BCD error in the axis parameter's origin compensation setting.		
	Origin search high speed error	1601	There is a BCD error in the axis parameter's high-speed origin search speed or the setting is out-of-range (1 to 500K pps).		
	Origin search proximity speed error	1602	There is a BCD error in the axis parameter's low-speed origin search speed or the setting is out-of-range (1 to 500K pps).		
	Origin search speed inconsistent	1603	The axis parameter's high-speed origin search speed is less than the low-speed origin search speed.		
	Operation mode selection error	1604	The axis parameter's origin search operating mode selection setting isn't 0, 1, 2, or 3.		
	Origin search operation error	1605	The axis parameter's origin search operation setting isn't 0, 1, or 2.		
	Origin search direction error	1606	The axis parameter's origin search direction setting isn't 0 or 1.		
	Origin detection method error	1607	Even though the axis parameter's origin search operation is set for other than single-direction mode, the origin detection method setting isn't 0, 1, or 2.		

Item	Name	Code	Cause	Clearing method	Operation after error
Backlash compensation	Backlash compensation BCD error	1700	There is a BCD error in the axis parameter's backlash compensation setting.	Transfer the data again after checking and correcting it.	When this error occurs during data transfer, the data transfer will be completed up to the data element transferred just before the error occurred. All operating axes will be decelerated to a stop.
	Backlash compensation speed error	1710	There is a BCD error in the axis parameter's backlash compensation speed setting or the setting exceeds the maximum speed.		
Software limits	CW limit error	1800	There is a BCD error in the axis parameter's CW software limit setting.		
	CCW limit error	1801	There is a BCD error in the axis parameter's CCW software limit setting.		
Zones	Zone 0 CW error	1900	There is a BCD error in zone 0's CW data.		
	Zone 0 CCW error	1901	There is a BCD error in zone 0's CCW data.		
	Zone 1 CW error	1910	There is a BCD error in zone 1's CW data.		
	Zone 1 CCW error	1911	There is a BCD error in zone 1's CCW data.		
	Zone 2 CW error	1920	There is a BCD error in zone 2's CW data.		
	Zone 2 CCW error	1921	There is a BCD error in zone 2's CCW data.		
Position data	Target position BCD error	2000 to 2099	These codes indicate a BCD error in position settings 00 to 99. (The last two digits of the code indicate the position data number where the error occurred.)		
Positioning sequences	Sequence data error	3000 to 3099	One of the following errors occurred in the positioning sequence: The completion code isn't 0 to 6. The initial speed number isn't 00 to 99. The acceleration time number isn't 0 to 9. The deceleration time number isn't 0 to 9. The target speed number isn't 00 to 99. The dwell time number isn't 00 to 19. The position data number isn't 00 to 99. (The last two digits of the code indicate the position data number where the error occurred.)		
Dwell times	Dwell time BCD error	4001 to 4019	These codes indicate that dwell times 1 to 19 have a BCD error or the setting is out-of-range (0 to 9.99 s). (The last two digits of the code indicate the dwell time number where the error occurred.)		

Initial Operation Error Checks

Group	Name	Code	Cause	Clearing method	Operation after error
Software limits	CW limit value	5030	If positioning were performed with the specified position data, the CW software limit would be exceeded, so positioning can't be started. The software limit was exceeded during continuous output for speed control or interrupt feeding.	Start operation after correcting all of the position data.	The current START command won't be executed. Or, the axes with the exceeded software limit will decelerate to a stop. Operating axes will not be affected.
	CCW limit value	5031	If positioning were performed with the specified position data, the CCW software limit would be exceeded so positioning can't be started. The software limit was exceeded during continuous output for speed control or interrupt feeding.		
Origin	Current position unknown	5040	One of the following commands was attempted with an unknown origin. Memory operation with absolute values, ABSOLUTE MOVEMENT direct operation, TEACH, or ORIGIN RETURN	Execute the command again after executing ORIGIN SEARCH or PRESENT POSITION CHANGE.	
Limit stop	Stopped at CW limit	5060	A CW-direction movement command was executed while the CW limit input signal was on.	After executing RELEASE PROHIBIT, move in the CCW direction.	
	Stopped at CCW limit	5061	A CCW-direction movement command was executed while the CCW limit input signal was on.	After executing RELEASE PROHIBIT, move in the CW direction.	
Software limits (JOG)	Manual CW limit	5070	The CW software limit was exceeded during JOG operation.	After executing RELEASE PROHIBIT, move in the CCW direction.	The axis that exceeded the limit will be decelerated to a stop. Other operating axes will not be affected.
	Manual CCW limit	5071	The CCW software limit was exceeded during JOG operation.	After executing RELEASE PROHIBIT, move in the CW direction.	
Sensor inputs	Emergency stop input	6000	The axis was stopped by an emergency stop signal input.	Start operation again after clearing the emergency stop input and executing RELEASE PROHIBIT.	An emergency stop will be performed on the affected axis. Other operating axes won't be affected.
	CW limit stop	6100	The axis was stopped by a CW limit input signal.	Move in the CCW direction after executing RELEASE PROHIBIT.	
	CCW limit stop	6101	The axis was stopped by a CCW limit input signal.	Move in the CW direction after executing RELEASE PROHIBIT.	

Group	Name	Code	Cause	Clearing method	Operation after error
Origin search	No origin proximity input signal	6200	The Unit is set for a proximity input signal, but no origin proximity input signal was received during the origin search.	Perform the origin search again after checking the origin proximity input signal wiring and signal type (N.C. or N.O.).	Other operating axes won't be affected.
	No origin input signal	6201	There was no origin input signal received during the origin search.	Perform the origin search again after checking the origin input signal wiring and signal type (N.C. or N.O.).	
	Origin input signal error	6202	There was an origin input signal received while decelerating after the origin proximity input signal was received during an origin search in mode 0.	Start operation after checking the deceleration data and the positions of the origin and origin proximity input signals.	The axis where the signal was input will be decelerated to a stop. Other operating axes won't be affected.
	Limit inputs in both directions	6203	Origin search can't be executed because there are limit signals being input in both directions.	Perform the origin search again after checking the wiring and signal types (N.C. or N.O.) of the limit signals in both directions.	The origin search won't be executed, but other operating axes won't be affected.
	Simultaneous origin proximity and limit signals	6204	The origin proximity input and limit signal in the origin search direction were input simultaneously during the origin search.	Perform the origin search again after checking the wiring and signal types (N.C. or N.O.) of the origin proximity and limit signals.	An emergency stop will be performed on the axis where the signals were input. Other operating axes won't be affected.
	Limit input already being input	6205	There was already a limit signal in the origin search direction during an origin search in a single direction. The origin input signal and limit signal opposite the origin search direction were ON simultaneously or the limit input in the search direction went ON while the origin input signal was reversed during an origin search without proximity input signal.	Perform the origin search again after checking the wiring and signal type (N.C. or N.O.) of the limit input.	The current START command won't be executed, but other operating axes won't be affected. An emergency stop will be performed on the axis where the signal was input.

Group	Name	Code	Cause	Clearing method	Operation after error
Origin search	Origin proximity/origin reverse error	6206	The limit signal in the origin search direction was input while the origin proximity input signal was reversed during a proximity search with limit input reversal. The limit input signal in the origin search direction was received while the origin input signal was reversed during a proximity search with limit input reversal (not using the origin proximity input signal).	Perform the origin search again after checking the signal types (N.C. or N.O.) and positions of the limit input signal, origin proximity input signal, and origin input signal inputs.	An emergency stop will be performed on the axis where the signals were input. Other operating axes won't be affected.
Absolute movement command	Absolute movement position error	7000	There is a BCD error in the position designation of the absolute movement command.	Execute the command again after correcting the position or speed designation.	The current START command won't be executed, but other operating axes won't be affected.
	Absolute movement speed error	7001	The speed designation of the ABSOLUTE MOVEMENT command is 0 or there is a BCD error.		
Relative movement command	Relative movement position error	7100	There is a BCD error in the position designation of the RELATIVE MOVEMENT command.		
	Relative movement speed error	7101	The speed designation of the RELATIVE MOVEMENT command is 0 or there is a BCD error.		
Interrupt feeding	Interrupt feeding position error	7200	There is a BCD error in the position designation of interrupt feeding.	Execute the command again after correcting the position or speed data.	
	Interrupt feeding speed error	7201	The speed designation of interrupt feeding is 0 or there is a BCD error.		
Origin return	Origin return error	7300	The origin return speed is 0 or there is a BCD error.		
Present position	Present position error	7400	There is a BCD error in the position data.		
JOG	JOG speed error	7500	The JOG speed is 0 or there is a BCD error.		

Group	Name	Code	Cause	Clearing method	Operation after error
Multiplex axis start	Multiplex axis start	8000	Two or more of the following commands were executed simultaneously for the same axis: START, INDEPENDENT START, ORIGIN SEARCH, ORIGIN RETURN, PRESENT POSITION CHANGE, JOG, TEACH, RELEASE PROHIBIT, ABSOLUTE MOVEMENT, RELATIVE MOVEMENT, or INTERRUPT FEEDING	Make sure that just one command is executed at one time and execute the command again.	The axis will be decelerated to a stop if the first command was START, INDEPENDENT START, ORIGIN SEARCH, ORIGIN RETURN, JOG, ABSOLUTE MOVEMENT, RELATIVE MOVEMENT, or INTERRUPT FEEDING. When interpolation operation is being used, all interpolated axes will be decelerated to a stop, but other operating axes won't be affected.
			One of the following commands was executed for a busy axis: ORIGIN SEARCH, ORIGIN RETURN, PRESENT POSITION CHANGE, JOG, TEACH, RELEASE PROHIBIT, ABSOLUTE MOVEMENT, RELATIVE MOVEMENT, or INTERRUPT FEEDING	Make sure you aren't executing an command for a busy axis and execute the command again.	The current START command won't be executed, but other operating axes won't be affected.
			A data save operation was executed while one of the following commands was in progress: START, INDEPENDENT START, ORIGIN SEARCH, ORIGIN RETURN, PRESENT POSITION CHANGE, JOG, TEACH, RELEASE PROHIBIT, ABSOLUTE MOVEMENT, RELATIVE MOVEMENT, or INTERRUPT FEEDING	Before executing a data save operation make sure that none of the axes are busy. Execute the data save operation again.	The axis will be decelerated to a stop if the first command was START, INDEPENDENT START, ORIGIN SEARCH, ORIGIN RETURN, JOG, ABSOLUTE MOVEMENT, RELATIVE MOVEMENT, or INTERRUPT FEEDING.
			Two or more of the following commands were executed: DATA WRITE, DATA READ, or DATA SAVE	Don't execute more than one data transfer or data save operation at a time. Execute the data transfer or data save operation again.	The first data transfer or data save operation will continue. All operating axes will be decelerated to a stop.
			A START or INDEPENDENT START command was executed for a different axis, but a busy axis was specified in the axis specification.	Make sure you aren't specifying a busy axis and execute the command again.	The current command will be ignored and other operating axes won't be affected.

Group	Name	Code	Cause	Clearing method	Operation after error
Memory operation	Sequence number error	8101	There was a memory operation command and the “sequence number enable” setting was 1, but there was a BCD error in the specified sequence number.	Execute the command again after checking the sequence number.	The current START command won’t be executed, but other operating axes won’t be affected.
			The “sequence number enable” setting was set to 0 for a memory operation executed after the power was turned on or the Unit was restarted, or after an origin search, origin return, or present position preset.	Execute the command again after changing the “sequence number enable” setting to 1.	
			The specified sequence number’s sequence data was incorrect.	Execute the command again after correcting the sequence data.	
	Speed error	8104	When positioning with memory operation, there was a speed of 0 specified in the sequence data.	Execute the command again after checking the speed data and sequence data to make sure that the target speed isn’t 0.	The axis will be decelerated to a stop if the error is detected during positioning. Other operating axes won’t be affected.
Teaching	Teaching address error	8200	There was a TEACH command, but there was a BCD error in the teaching address.	Execute the command again after correcting the teaching address.	The current START command won’t be executed, but other operating axes won’t be affected.
Data transfer	Write transfer: number of words error	8310	The number of words to transfer was set to 0, had a BCD error, or exceeded the maximum.	Execute the command again after changing the incorrect setting.	
	Write transfer: source word error	8311	There was a BCD error or out-of-range error in the transfer source word.		
	Write transfer: destination address error	8312	There was a BCD error or out-of-range error in the transfer destination address.		
	Read transfer: number of words error	8320	The number of words to transfer is set to 0, has a BCD error, or exceeds the maximum.		
	Read transfer: source address error	8321	There was a BCD error or out-of-range error in the transfer source address.		
	Read transfer: destination word error	8322	There was a BCD error or out-of-range error in the transfer destination word.		
Error counter reset/ Origin adjustment output	Error counter reset/ Origin adjustment output error	8400	There was an attempt to output a error counter reset/origin adjustment output when the output couldn’t be used.	Execute the command again after checking that the output can be used and changing the program if necessary.	The axis will be decelerated to a stop. Other operating axes won’t be affected.
Override	Override error	8500	There was a BCD error or out-of-range error in the override.	Execute the command again after correcting the data.	

Group	Name	Code	Cause	Clearing method	Operation after error
Positioning	Positioning timer timeout	8600	The Servodriver's positioning completed signal didn't go ON within the specified time.	Execute the command again after making adjustments such as adjusting the positioning monitor time or the servo system's gain.	The axis will be decelerated to a stop.
Intelligent Read/Write	IORD format error	8700	One of the following errors occurred when the IORD instruction was executed: The Position Control Unit's address was out of range or wasn't BCD. The data transfer amount was out of range or wasn't BCD.	Execute the instruction again after correcting the data.	The current data transfer won't be executed, but other operating axes won't be affected.
	IOWR format error	8701	One of the following errors occurred when the IOWR instruction was executed: The Position Control Unit's address was out of range or wasn't BCD. The data transfer amount was out of range or wasn't BCD.		
Flash memory	Flash memory error	9300	An attempt was made to save data to flash memory, but the data couldn't be saved because of a problem with the flash memory.	Execute the data save operation again. The error will be cleared if the data is written normally. Replace the Unit if the error occurs again. (In some cases the data save operation can take up to 30 s.)	The current instruction won't be executed.

11-5 CPU Error Indicators

The CPU Unit of the C200H/HS and C200HX/HG/HE PCs has the following indicators to show errors that occur in the Position Control Unit. The errors are indicated for the Position Control Unit as a Special I/O Unit.

11-5-1 Special I/O Unit Error List

Error	Error cause and operation	Remedy
Waiting for Special I/O Unit startup	There is a hardware fault at a Special I/O Unit. The PC will not begin operation in this condition.	Replace the Special I/O Unit where the error occurred. The faulty Unit will be indicated by a "$**" character in the I/O Table Read operation.
I/O Unit over	Two or more Special I/O Units have the same unit number setting. The PC will not begin operation in this condition. The Special I/O Unit Error Flag (SR 25415) will be ON.	Change the unit number settings to eliminate duplications. The unit numbers can be listed with the I/O Table Read operation.
Special I/O Unit error	Refreshing between the CPU Unit and Special I/O Unit did not proceed normally. In this case, only the faulty Unit won't operate. The Special I/O Unit Error Flag (SR 25415) will be ON. Mounted on the Remote I/O Slave Rack and the mounting position parameter of the Unit (bits 08 to 15 of m+2) is set to "00."	With a C200H/HS PC, determine the unit number of the faulty Unit from flags AR 0000 through AR 0009. Restart the Unit by toggling the corresponding Restart Bit (AR 0100 to AR 0109) after eliminating the cause of the error. With a C200HX/HG/HE PC, determine the unit number of the faulty Unit from flags SR 28200 through SR 28215. Restart the Unit by toggling the corresponding Restart Bit (SR 28100 through SR 28115) after eliminating the cause of the error. Replace the Unit if it doesn't restart after toggling the Restart Bit. Correct the mounting position and mounting position parameter and restart.

11-5-2 Useful Flags and Control Bits

Special I/O Unit Error Flags

The PC error flags in the following tables will indicate the following errors.

- Duplicated unit numbers on Special I/O Units
- Refreshing between the CPU Unit and Special I/O Unit didn't proceed normally.

Flag address		Function
C200H/HS	C200HX/HG/HE	
AR 0000	SR 28200	ON when an error occurred in Unit 0.
AR 0001	SR 28201	ON when an error occurred in Unit 1.
AR 0002	SR 28202	ON when an error occurred in Unit 2.
AR 0003	SR 28203	ON when an error occurred in Unit 3.
AR 0004	SR 28204	ON when an error occurred in Unit 4.
AR 0005	SR 28205	ON when an error occurred in Unit 5.
AR 0006	SR 28206	ON when an error occurred in Unit 6.
AR 0007	SR 28207	ON when an error occurred in Unit 7.
AR 0008	SR 28208	ON when an error occurred in Unit 8.
AR 0009	SR 28209	ON when an error occurred in Unit 9.
---	SR 28210	ON when an error occurred in Unit A (10).*
---	SR 28211	ON when an error occurred in Unit B (11).*
---	SR 28212	ON when an error occurred in Unit C (12).*
---	SR 28213	ON when an error occurred in Unit D (13).*
---	SR 28214	ON when an error occurred in Unit E (14).*
---	SR 28215	ON when an error occurred in Unit F (15).*

Note *Used in C200HX/HG-CPU5□-(Z)E/6□-(Z)E CPU Units only.

Flag address	Function
SR 25415	ON when an error occurred in a Special I/O Unit.

Special I/O Unit Restart Bits

To restart a Special I/O Unit, toggle (OFF → ON → OFF) the corresponding Restart Bit shown in the following table. These bits can be used to restart the Unit without turning off the power supply.

Bit address		Function
C200H/HS	C200HX/HG/HE	
AR 0100	SR 28100	Restarts Unit 0.
AR 0101	SR 28101	Restarts Unit 1.
AR 0102	SR 28102	Restarts Unit 2.
AR 0103	SR 28103	Restarts Unit 3.
AR 0104	SR 28104	Restarts Unit 4.
AR 0105	SR 28105	Restarts Unit 5.
AR 0106	SR 28106	Restarts Unit 6.
AR 0107	SR 28107	Restarts Unit 7.
AR 0108	SR 28108	Restarts Unit 8.
AR 0109	SR 28109	Restarts Unit 9.
---	SR 28110	Restarts Unit A (10).*
---	SR 28111	Restarts Unit B (11).*
---	SR 28112	Restarts Unit C (12).*
---	SR 28113	Restarts Unit D (13).*
---	SR 28114	Restarts Unit E (14).*
---	SR 28115	Restarts Unit F (15).*

Note *Used in C200HX/HG-CPU5□-(Z)E/6□-(Z)E CPU Units only.

Appendix A
Data Calculation Standards

This section explains the internal processing of the C200HW-NC□13 Position Control Unit, so it can be used as a reference. The performance values shown in this section are the measurements results obtained under the following conditions.

PC: C200HX-CPU44-E (with no Expansion or Remote Racks)
Position Control Unit: Only one Unit is mounted on the CPU Rack.

Note The performance values shown in this section will vary depending on conditions such as the configuration and settings of the PC, the user program, and other mounted Units, so use these values for reference only.

Speeds

Due to internal processing, the following difference occurs between the value set as the speed (frequency) and the value actually output from the Unit.

$$\text{Actual speed (pps)} = \frac{16{,}000{,}000}{\text{Round}\left(\dfrac{16{,}000{,}000}{\text{Set value}}\right)}$$

Note The actual speed is obtained within an error range of ±0.02%.

Note Round: Function for rounding the value.

$\text{Round}\left(\dfrac{16{,}000{,}000}{\text{Set value}}\right)$: Divider ratio

pps: Pulses per second

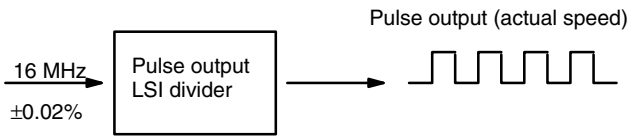

This difference occurs because a 16-MHz source clock is divided by the pulse output LSI divider. An error of ±0.02% also occurs because the source clock is affected by factors such as the temperature. However, this does not affect the positioning accuracy.

Set value (pps)	Actual speed (pps)
500,000	500,000.00
250,000	250,000.00
180,000	179,775.28
140,000	140,350.88
95,000	95,238.10
3,500	3,500.33
92	92.00

Note An additional error of ±0.02% max. occurs in the actual speed.

Power Up Time

When the Position Control Unit is powered up or restarted, the time required for the Unit to complete its initial processing and be ready to recognize the START command is approximately 800 ms.

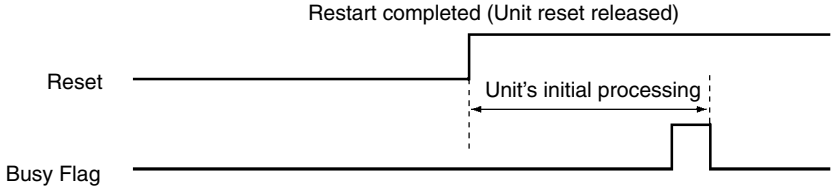

START Execution Time

The time required from when a START command is recognized until pulses are output will vary depending on the combination of positions to be executed.

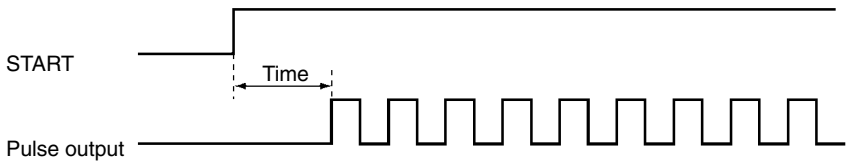

Even if the START commands for multiple axes are recognized simultaneously, there will be a discrepancy in the actual pulse output.

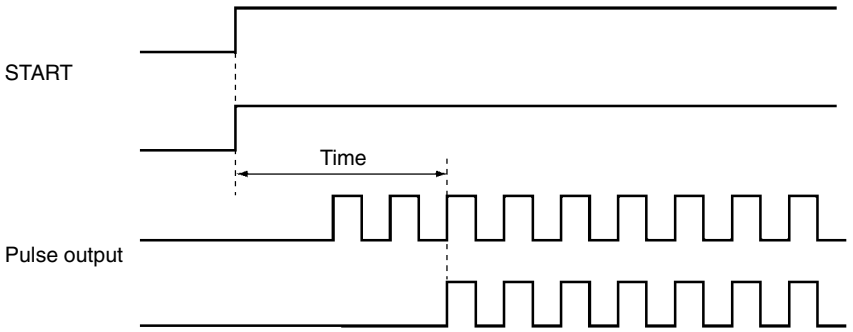

Operation	NC113	NC213				NC413			
		Y-axis starting while X axis is stopped	Y-axis starting while X axis is operating	X-axis and Y-axis simultaneous starting	Interpolation starting from X-axis (2-axis control)	U-axis starting while X, Y, and Z axes are stopped	U-axis starting while X, Y, and Z axes are operating	X, Y, Z, and U-axis simultaneous starting	Interpolation starting from X-axis (4-axis control)
Jogging	8 ms	7.5 ms	9 ms	11 ms	---	8.5 ms	10.5 ms	17 ms	---
Memory operation	9 ms	8 ms	10 ms	14 ms	10 ms	9 ms	11 ms	24 ms	12 ms
Direct operation	9 ms	8.5 ms	9.5 ms	12 ms	---	9 ms	11 ms	19 ms	---

Data Transfer and Data Saving Time

When data is transferred using either the READ DATA and WRITE DATA commands (word n+1, bits 12 and 13) or the IORD and IOWR instructions, the execution time will vary depending on the number of words of data to be transferred. The following tables show the average times for transferring positioning sequences.

Data Reading Time

Amount of data to be read	NC113		NC213		NC413	
	IORD	READ DATA	IORD	READ DATA	IORD	READ DATA
3 words	1.7 ms	27 ms	1.7 ms	31 ms	2.5 ms	49 ms
15 words	2.5 ms	29 ms	2.5 ms	32 ms	3.7 ms	46 ms
30 words	3.5 ms	31 ms	3.5 ms	34 ms	5.3 ms	47 ms
126 words	10.5 ms	---	10.5 ms	---	15 ms	---
300 words	---	85 ms	---	92 ms	---	121 ms
672 words	---	185 ms	---	188 ms	---	242 ms

Data Writing Time

Amount of data to be written	NC113		NC213		NC413	
	IOWR	WRITE DATA	IOWR	WRITE DATA	IOWR	WRITE DATA
3 words	2.4 ms	28 ms	2.4 ms	33 ms	3.7 ms	49 ms
15 words	6.1 ms	30 ms	6.1 ms	33 ms	9.8 ms	47 ms
30 words	11 ms	32 ms	11 ms	35 ms	17 ms	47 ms
126 words	41 ms	---	41 ms	---	62 ms	---
300 words	---	133 ms	---	122 ms	---	142 ms
672 words	---	301 ms	---	268 ms	---	293 ms

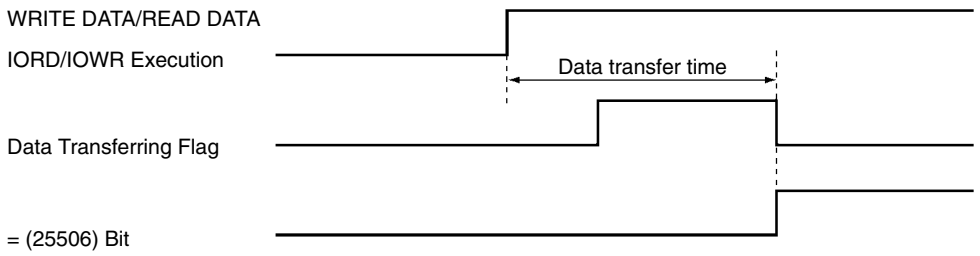

The average time required for saving data is approximately three seconds, but it may take as long as 33 seconds in some cases.
If the time required for saving data exceeds 33 seconds, however, a flash memory error (error code: 9300) will occur and the data save will be interrupted.

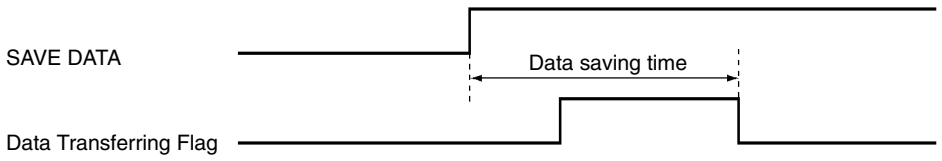

Effect on the Programmable Controller Scan

When a single Position Control Unit is mounted, the PC's cycle time increases as follows:

Operation	NC113	NC213	NC413
Mounting	2.6 ms	2.9 ms	4.5 ms
Data writing	2.9 ms	3.2 ms	5.5 ms
Data reading	2.9 ms	3.2 ms	5.5 ms

Minimum Operation Time

The minimum operation time for the Position Control Unit is 10 ms. With memory operation, when a sequence with a "continuous" completion code is executed and the positioning time for that sequence is shortened according to the amount of movement and the target speed, the operation time required for the continuous completion cannot be assured and positioning will be executed as if the completion code were "automatic." When using a sequence with a "continuous" completion code, be sure to adjust the target speed and target position so that the operation time will be equal to or greater than the minimum operation time.

• Sequence operation time ≧ Minimum operation time

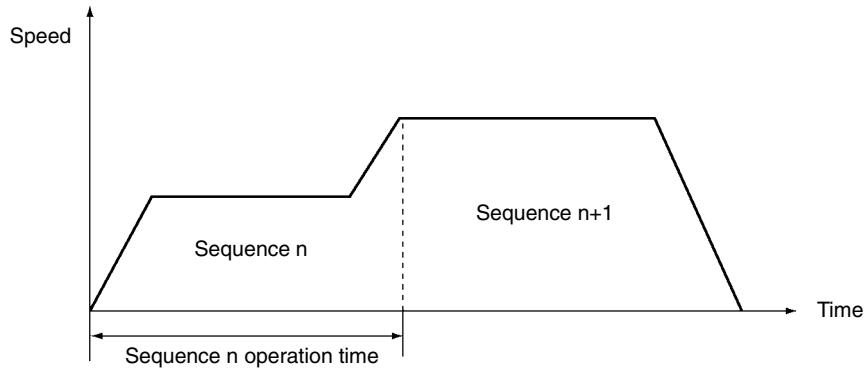

• Sequence operation time < Minimum operation time

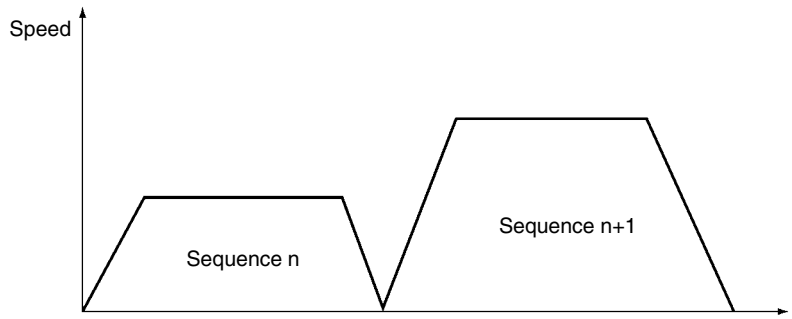

External Interrupt Processing Time

The response time is as shown below with respect to external inputs such as limit sensors and interrupt inputs. The Position Control Unit continues the current operation during the response time for each external input.

Example: Emergency Stop Input

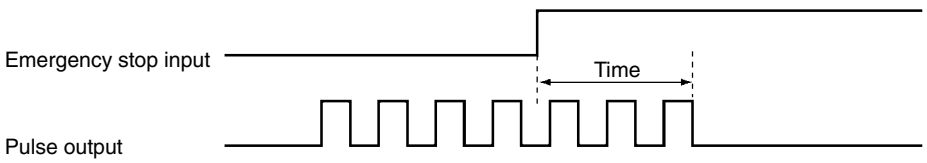

Operation	NC113	NC213	NC413
Emergency stop input	0.59 ms	0.59 ms	0.59 ms
CW/CCW limit input	7.7 ms	7.7 ms	7.7 ms
Interrupt input	0.08 ms	0.08 ms	0.08 ms

Forced Interruption Start Time

When the FORCED INTERRUPT command is executed during memory operation, the response time until the designated sequence is started is as follows:

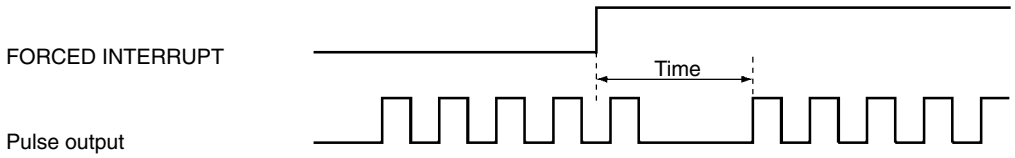

Operation	NC113	NC213	NC413
FORCED INTERRUPT response	13 ms	13 ms	13 ms

Speed Change Response Time in Direct Operation

The target speed can be changed during direct operation by changing the speed data set in the operating data area. The time from when the speed is changed until the change is reflected in the pulse output is as follows:

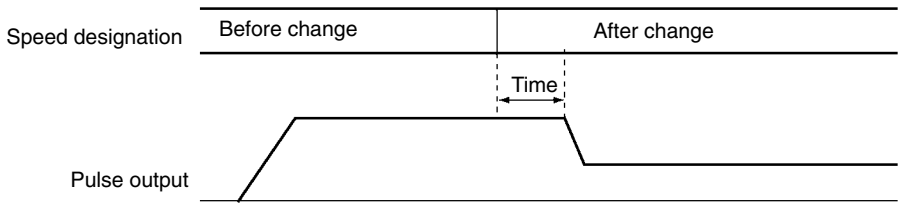

Operation	NC113	NC213	NC413
Speed change response	6 ms	6 ms	6 ms

Target Position Change Processing Time in Direct Operation

The target position can be changed during direct operation by changing the position data in the operating data area and restarting the direct operation. The time from when the direct operation is restarted until the position change is reflected in the pulse output is as follows:

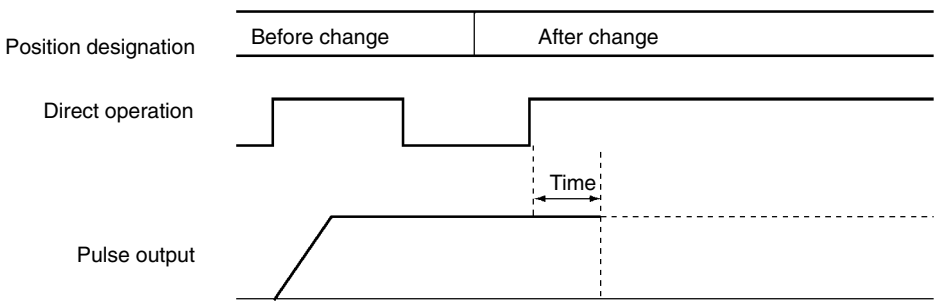

Operation	NC113	NC213	NC413
Position change response	8 ms	8 ms	8 ms

Appendix B
Estimating Times and Pulses for Acceleration/Deceleration

The acceleration time is the time it takes to reach the maximum speed from a speed of the initial speed. The deceleration time is the time from the maximum speed to the initial speed. Accordingly, the time it takes to reach the target speed, the time from the target speed to the initial speed, as well as the number of pulses for each of them, can all be found by means of the formulas shown below.

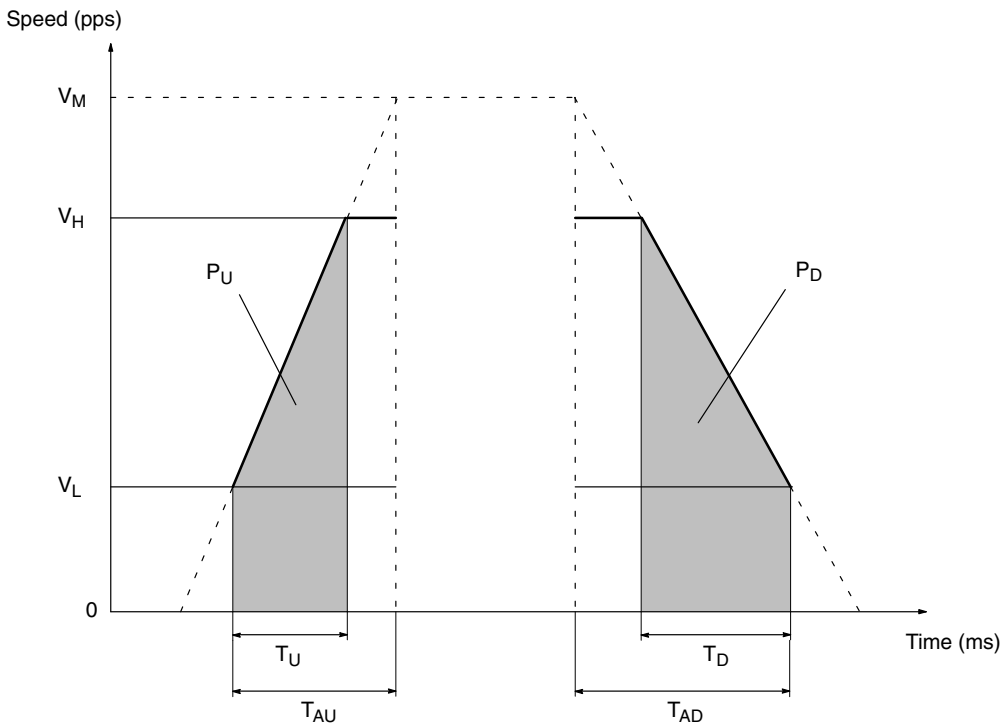

V_M: Maximum speed setting
T_U: Acceleration time from initial speed (V_L) to target speed (V_H)
T_D: Deceleration time from target speed (V_H) to initial speed (V_L)
T_{AU}: Acceleration time setting
T_{AD}: Deceleration time setting

Using the above abbreviations, the number of pulses for the acceleration and deceleration time can be calculated as follows:

$$T_U = \frac{(V_H - V_L)}{(V_M - V_L)} T_{AU}$$

$$T_D = \frac{(V_H - V_L)}{(V_M - V_L)} T_{AD}$$

$$\text{Acceleration pulses } (P_U) = \frac{(V_H + V_L) \times T_U}{2} = \frac{T_{AU}}{2 \times (V_M - V_L)} (V_H + V_L)(V_H - V_L)$$

$$\text{Deceleration pulses } (P_D) = \frac{(V_H + V_L) \times T_D}{2} = \frac{T_{AD}}{2 \times (V_M - V_L)} (V_H + V_L)(V_H - V_L)$$

Example

In this example, numeric settings are entered for the operation pattern shown below.

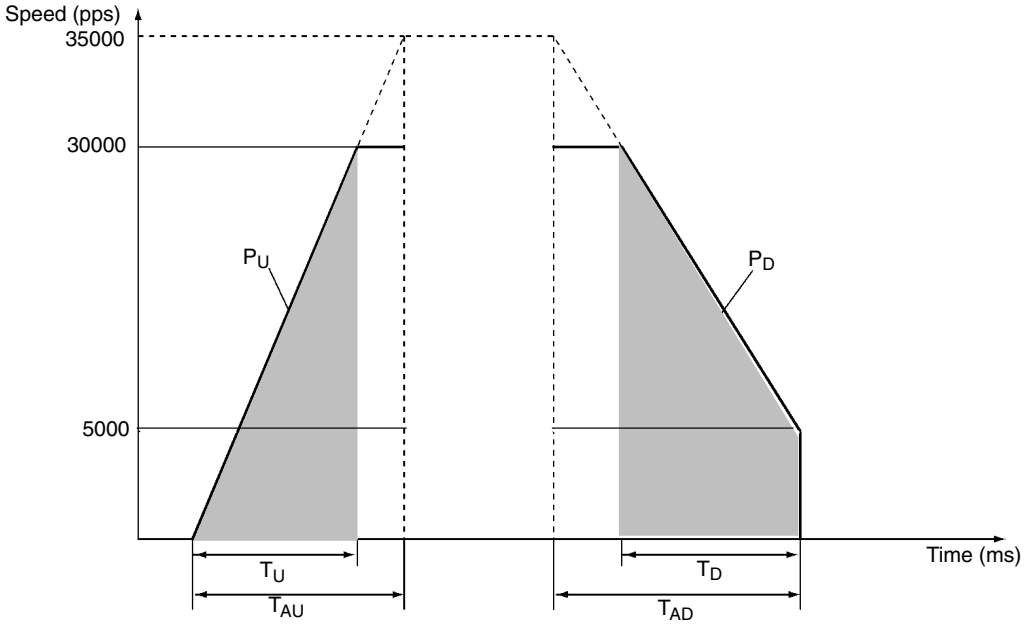

Maximum speed setting: V_M = 35,000 pps
Acceleration time setting: T_{AU} = 400 ms
Deceleration time setting: T_{AD} = 550 ms

$$\text{Acceleration time } (T_U) = \frac{V_H - V_L}{V_M - V_L} T_{AU} = \frac{30000 - 5000}{35000 - 5000} \times 400 \times 10^{-3} = \frac{5}{6} \times 400 \times 10^{-3} = 333 \text{ (ms)}$$

$$\text{Acceleration pulses } (P_U) = \frac{(V_H + V_L) \times T_U}{2} = \frac{(30000 + 5000) \times 333 \times 10^{-3}}{2} = 5827 \text{ (pulses)}$$

Approx. 5800 pulses

$$\text{Deceleration time } (T_D) = \frac{V_H - V_L}{V_M - V_L} T_{AD} = \frac{30000 - 5000}{35000 - 5000} \times 550 \times 10^{-3} = \frac{5}{6} \times 550 \times 10^{-3} = 458 \text{ (ms)}$$

$$\text{Deceleration pulses } (P_D) = \frac{(V_H + V_L) \times T_D}{2} = \frac{(30000 + 5000) \times 458 \times 10^{-3}}{2} = 8015 \text{ (pulses)}$$

Approx. 8000 pulses

Appendix C
Error Code List

This table is for the C200HW-NC413. For C200HW-NC113 or C200HW-NC113 PCUs, refer to *Section 4 Data Areas* and check the words and addresses.

Error code	Error name	Related data
0001/0002	Parameters destruction, data destruction	Flash memory
0010	Operating data area specification error	m
0011	Operating data area address specification error	m+1
0012	Mounting position specification error	m+2, bits 08 to 15
0013	Parameter designation error	m+2, bits 00 to 07
1000	Initial speed BCD error	m+7/m+31/m+55/m+79 (address: 0007/0031/0055/0079)
1010	Maximum speed BCD error	m+6/m+30/m+54/m+78 (address: 0006/0030/0054/0078)
1310	Acceleration time error	m+15, m+16/m+39, m+40/m+63, m+64/m+87, m+88 (address: 0015, 0016/0039, 0040/0063, 0064/0087, 0088)
1311 to 1319	Acceleration time error	Address: 1602 to 1619/2602 to 2619/3602 to 3619/4602 to 4619
1320	Deceleration time error	m+17, m+18/m+41, m+42/m+65, m+66/m+89, m+90 (address: 0017, 0018/0041, 0042/0065, 0066/0089, 0090)
1321 to 1329	Deceleration time error	Address: 1622 to 1639/2622 to 2639/3622 to 3639/4622 to 4639
1330	Acceleration/deceleration curve error	m+14/m+38/m+62/m+86 (address: 0014/0038/0062/0086)
1332	Positioning monitor time	m+19/m+43/m+67/m+91 (address: 0019/0043/0067/0091)
1500 to 1599	Speed BCD error	Address: 1300 to 1399/2300 to 2399/3300 to 3399/4300 to 4399
1600	Origin compensation BCD error	m+10, m+11/m+34, m+35/m+58, m+59/m+82, m+83 Address: 0010, 0011/0034, 0035/0058, 0059/0082, 0083)
1601	Origin search high speed error	m+8/m+32/m+56/m+80 (address: 0008/0032/0056/0080)
1602	Origin search proximity speed error	m+9/m+33/m+57m+81 (address: 0009/0033/0057/0081)
1603	Origin search speed inconsistent	m+8/m+32/m+56/m+80, m+9/m+33/m+57/m+81 (address: 0008/0032/0056/0080, 0009/0033/0057/0081)
1604	Operation mode selection error	m+5/m+29/m+53/m+77 (address: 0005/0029/0053/0077) bits 00 to 03
1605	Origin search operation error	m+5/m+29/m+53/m+77 (address: 0005/0029/0053/0077) bits 04 to 07
1606	Origin search direction error	m+5/m+29/m+53/m+77 (address: 0005/0029/0053/0077) bits 12 to 15
1607	Origin detection method error	m+5/m+29/m+53/m+77 (address: 0005/0029/0053/0077) bits 04 to 07, 08 to 11
1700	Backlash compensation BCD error	m+12/m+36/m+60/m+84 (address: 0012/0036/0060/0084)
1710	Backlash compensation speed error	m+13/m+37/m+61/m+85 (address: 0013/0037/0061/0085)
1800	CW limit error	m+22, m+23/m+46, m+47/m+70, m+71/m+94, m+95 (address: 0022, 0023/0046, 0047/0070, 0071/0094, 0095)
1801	CCW limit error	m+20, m+21/m+44, m+45/m+68, m+69/m+92, m+93 (address: 0020, 0021/0044, 0045/0068, 0069/0092, 0093)
1900	Zone 0 CW error	Address: 1662, 1663/2662, 2663/3662, 3663/4662, 4663
1901	Zone 0 CCW error	Address: 1660, 1661/2660, 2661/3660, 3661/4660, 4661
1910	Zone 1 CW error	Address: 1666, 1667/2666, 2667/3666, 3667/4666, 4667

Error code	Error name	Related data
1911	Zone 1 CCW error	Address: 1664, 1665/2664, 2665/3664, 3665/4664, 4665
1920	Zone 2 CW error	Address: 1670, 1671/2670, 2671/3670, 3671/4670, 4671
1921	Zone 2 CCW error	Address: 1668, 1669/2668, 2669/3668, 3669/4668, 4669
2000 to 2099	Target position BCD error	Address: 1400 to 1599/2400 to 2599/3400 to 3599/4400 to 4599
3000 to 3099	Sequence data error	Address: 1000 to 1299/2000 to 2299/3000 to 3299/4000 to 4299
4001 to 4019	Dwell time BCD error	Address: 1641 to 1659/2641 to 2659/3641 to 3659/4641 to 4659
5030	CW limit value	Address: 1400 to 1599/2400 to 2599/3400 to 3599/4400 to 4599 I+6, I+7/I+11, I+12/I+16, I+17/I+21. I+22
5031	CCW limit value	Address: 1400 to 1599/2400 to 2599/3400 to3599/4400 to 4599 I+6, I+7/I+11, I+12/I+16, I+17/I+21. I+22
5040	Current position unknown	---
5060	Stopped at CW limit	CW limit input signal
5061	Stopped at CCW limit	CCW limit input signal
5070	Manual CW limit	m+22, m+23/m+46, m+47/m+70, m+71/m+94, m+95 (address: 0022, 0023/0046, 0047/0070, 0071/0094, 0095)
5071	Manual CCW limit	m+20, m+21/m+44, m+45/m+68, m+69/m+92, m+93 (address: 0020, 0021/0044, 0045/0068, 0069/0092, 0093)
6000	Emergency stop input	Emergency stop input signal
6100	CW limit stop	CW limit input signal
6101	CCW limit stop	CCW limit input signal
6200	No origin proximity input signal	Origin proximity input signal
6201	No origin input signal	Origin input signal
6202	Origin input signal error	Origin input signal during deceleration
6203	Limit inputs in both directions	CW/CCW limit input signal
6204	Simultaneous origin proximity and limit signals	Origin proximity input signal, CW/CCW limit input signal
6205	Limit input already being input	CW/CCW limit input signal
6206	Origin proximity reverse error	Origin proximity input signal, CW/CCW limit input signal
7000	Absolute movement position error	I+6, I+7/I+11, I+12/I+16, I+17/I+21, I+22
7001	Absolute movement speed error	I+8/I+13/I+18/I+23
7100	Relative movement speed error	I+6, I+7/I+11, I+12/I+16, i+17/I+21, I+22
7101	Relative movement speed error	I+8/I+13/I+18/I+23
7200	Interrupt feeding position error	I+6, I+7/I+11, I+12/I+16, I+17/I+21, I+22
7201	Interrupt feeding speed error	I+8/I+13/I+18/I+23
7300	Origin return error	I+8/I+13/I+18/I+23
7400	Present position preset error	I+6, I+7/I+11, I+12/I+16, I+17/I+21, I+22
7500	JOG speed error	I+8/I+13/I+18/I+23
8000	Multiplex axis start	---
8101	Sequence number error	n/n+2/n+4/n+6 (bit 00), n+1/n+3/n+5/n+7 (bits 00 to 07) Address: 1000 to 1299/2000 to 2299/3000 to 3299/4000 to 4299
8104	Speed error	Address: 1300 to 1399/2300 to 2399/3300 to 3399/4300 to 4399
8200	Teaching address error	I+10/I+15/I+20/I+25 (bits 00 to 07)
8310	Write transfer: number of words error	I
8311	Write transfer: source word error	I+1
8312	Write transfer: destination address error	I+2
8320	Read transfer: number of words error	I+3
8321	Read transfer: source address error	I+4

Error code	Error name	Related data
8322	Read transfer: destination word error	I+5
8400	Error counter reset/ origin adjustment output error	---
8500	Override error	I+9/I+14/I+19/I+24
8600	Positioning timer timeout	Servomotor driver positioning completed input signal, m+19/m+43/m+67/m+91 (address: 0019/0043/0067/0091)
8700	IORD format error	---
8701	IOWR format error	---
9300	Flash memory error	---

Appendix D
Effect of Cable Length on Pulse Output

Depending on the cable used for connecting the Position Control Unit and a load (such as a servomotor driver), there may be effects on waveform distortion, pulse width, and so on.

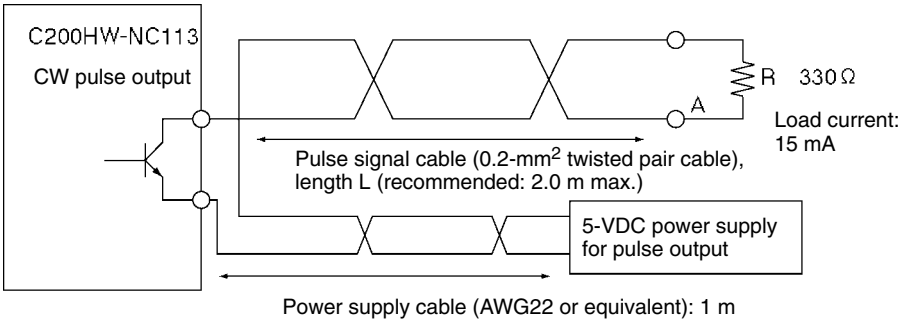

Point A sample waveform (vertical axis: 1V/div; horizontal axis: 500 ns/div) temperature = room temperature

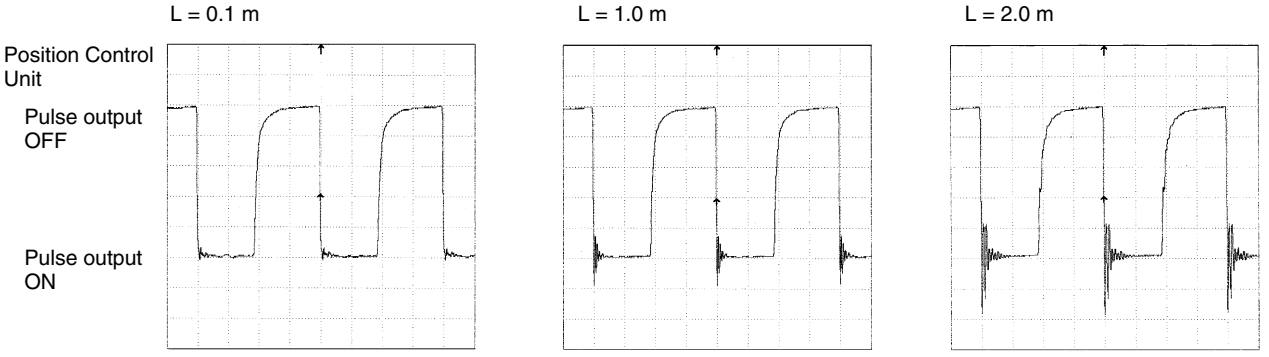

Appendix E
Parameter Coding Sheets

MACHINE No. □ **□NC113** **□NC213** **□NC413**

Customer name:	Machine name:	Prepared by:

Common Parameters

15 ←		→	00	DM	Function
0	0	0		00	Designation of operating data area
				01	Beginning word of operating data area
				02	Unit mounting position; parameter designation
0	0	0	0	03	Reserved

See *Unit Mounting Position; Parameter Designation* below.

Unit Mounting Position; Parameter Designation

Bit	Function	00	01
08 to 15	Unit mounting position	CPU Rack, Expansion I/O Rack	Remote I/O Slave Rack
00 to 07	Parameter designation	Parameters saved to PCU	Parameters stored in m+4 to m+99

Axis Parameters

NC113					NC213					NC413										
X axis					Y axis					Z axis					U axis					
15	←→		00		15	←→		00		15	←→		00		15	←→		00		Function
0				04	0				28	0				52	0				76	I/O setting
				05					29					53					77	Operation mode selection
				06					30					54					78	Maximum speed
				07					31					55					79	Initial speed
				08					32					56					80	Origin search high speed
				09					33					57					81	Origin search proximity speed
				10					34					58					82	Origin compensation
				11					35					59					83	
				12					36					60					84	Backlash compensation
				13					37					61					85	Backlash compensation speed
0	0	0		14	0	0	0		38	0	0	0		62	0	0	0		86	Acceleration/deceleration curve
				15					39					63					87	Acceleration time
0	0			16	0	0			40	0	0			64	0	0			88	
				17					41					65					89	Deceleration time
0	0			18	0	0			42	0	0			66	0	0			90	
				19					43					67					91	Positioning monitor time
				20					44					68					92	CCW limit
				21					45					69					93	
				22					46					70					94	CW limit
				23					47					71					95	
0	0	0	0	24	0	0	0	0	48	0	0	0	0	72	0	0	0	0	96	Reserved
0	0	0	0	25	0	0	0	0	49	0	0	0	0	73	0	0	0	0	97	
0	0	0	0	26	0	0	0	0	50	0	0	0	0	74	0	0	0	0	98	
0	0	0	0	27	0	0	0	0	51	0	0	0	0	75	0	0	0	0	99	

← See *I/O Setting* on the next page.
← See *Operation Mode Selection* on the next page.

I/O Setting

Bit	Item	Setting details
00	Output pulse selection	0: CW/CCW output 1: Pulse direction output
01 to 03	Reserved	Set to 0.
04	Limit input signal type	0: N.C. contact; 1: N.O. contact
05	Origin proximity input signal type	0: N.C. contact; 1: N.O. contact
06	Origin input signal type	0: N.C. contact; 1: N.O. contact
07	Emergency stop input signal	0: Pulse output stop 1: Pulse output stop and error counter reset signal output (modes 1 and 2)
08	Origin undefined designation	0: Retain prior status. 1: Forcibly change to origin undefined status.
09 to 15	Reserved	Set to 0.

Operation Mode Selection

Bit	Item	Setting details
00 to 03	Operation mode	0 (Mode 0): Uses stepping motor, and uses external sensor signal as origin input signal. 1 (Mode 1): Uses servomotor driver, and uses encoder's Z-phase signal for origin input signal. Does not use positioning completed input signal. 2 (Mode 2): Same as Mode 1, but uses positioning completed input signal. 3 (Mode 3): Uses OMRON H-Series or M-Series Servomotor Driver. Origin search is completed by Servomotor Driver's origin adjustment command. Uses positioning completed input signal.
04 to 07	Origin search operation	0: Reverse mode 1 (reverse at limit input) Detects origin in designated origin search direction. 1: Reverse mode 1 (Error stop at limit input) Detects origin in designated origin search direction. 2: Single-direction mode (No reverse)
08 to 11	Origin detection method	0: Takes origin input signal after origin proximity input signal turns ON (↑) and OFF (↓). 1: Takes origin input signal after origin proximity input signal turns ON (↑). 2: Takes origin input signal without using origin proximity input signal. 3: Takes origin input signal after limit input signal turns ON (↑) and OFF (↓), or OFF (↓), without using origin proximity input signal. (Enabled only for single-direction mode.)
12 to 15	Origin search direction	0: CW direction 1: CCW direction

Appendix F
Using with CS1-series PCs

Observe the following points when using C200HW-NC113/NC213/NC413 PCUs with CS1-series PCs.

Differences in Operating Memory Area and Common Parameter Area Allocations
The beginning words of the operating memory area (n) and common parameter area (m) will differ in the way shown below.

- Beginning Word of Operating Memory Area, n
  Changes from n = IR 100 (or 400 when unit number ≧ A) + (unit number × 10)
  to n = CIO 2000 + (unit number × 10)
- Beginning Word of Common Parameter Area, m
  Changes from m = DM 1000 + (unit number × 100)
  to m = D20000 + (unit number × 100)

Differences in Operating Data Area and Data Transfer Area Designations
When designating the operating data area (using the common parameters) and the data transfer area (from the operating data area), the following restrictions apply.

Operating Data Area (I to I + 33 max.)
Only the following areas can be set using the common parameters (m, m+1):

- D00000 to D00999
- D02600 to D05999
- E0_00000 to E0_06143

m = D20000 + (unit number × 100)
I = Beginning word of operating data area

Area	Address in CS1 CPU Unit	Designation method using common parameters (m onwards)	
		Designation of operating data area (I onwards): Word m, bits 00 to 15 (Hex)	Beginning address of operating data area (I): Word m+1, bits 00 to 15 (4 digits, BCD)
General-purpose DM area	D00000 to D00999	000D Hex	0000 to 0999
	D02600 to D05999		2600 to 5999
EM area, bank 0	E0_00000 to E0_06143	000E Hex	0000 to 6143

Note Only the CPU Unit memory addresses in the above table can be designated.

Data Transfer Area (k onwards)

The data transfer area (set using operating data area words I to I+5) must be within the following ranges. The data transfer area is determined by the transfer source word or transfer destination word along with the number of transfer words.

- D00000 to D00999
- D02600 to D05999
- E0_00000 to E0_06143

m = D20000 + (unit number × 100)
I = Beginning word of operating data area (designated with m+1)

Area	Address of transfer destination or transfer source in CS1 CPU Unit	Designation of operating data area: Word m, bits 00 to 15	Designation method using operating data area (I onwards)	
			Writing from CPU Unit to PCU	Reading from PCU to CPU Unit
			Transfer source word: Word I+1, bits 00 to15 (4 digits, BCD)	Transfer destination word: Word I+5, bits 00 to15 (4 digits, BCD)
General-purpose DM area	D00000 to D00999	000D Hex	0000 to 0999	0000 to 0999
	D02600 to D05999		2600 to 5999	2600 to 5999
EM area, bank 0	E0_00000 to E0_06143	000E Hex	0000 to 6143	0000 to 6143

Note Only the CPU Unit memory addresses in the above table can be designated.

Data Configuration

The following data configuration diagrams are for the C200HW-NC413.

Operating Memory Area (CIO Area)

n = 2000 + (unit number×10)

Bit	15 0	Contents	Direction
Word n to Word n+7	Operating commands	START, positioning sequences, ORIGIN SEARCH, PRESENT POSITION CHANGE	CPU Unit → PCU
Word n+8 to Word n+19	Status	Present positions, zones, error flags, etc.	PCU → CPU Unit

Parameter Areas (DM Area)

m = D20000 + (unit number×100)

Bit	15 0	Contents	Direction
Word m to Word m+3	Common parameters	Designation of operating data area, etc.	CPU Unit → PCU
Word m+4 to Word m+99	Axis parameters	I/O settings, operation mode selection, initial speed, acceleration time, backlash compensation, etc.	CPU Unit → PCU

Operating Data Area (DM or EM Area)

I is specified in the common parameter area (in DM or EM area)

Bit	15 0	Contents	Direction
Word I to Word I+5	Common (data transfer information)	Transfer designations for memory operation data	CPU Unit → PCU
Word I+6 to Word I+25	Positions, speeds, etc.	Positions, speeds, and acceleration/deceleration times used for direct operation	CPU Unit → PCU
Word I+26 to Word I+31	Status	Positioning sequence being executed (memory operation), I/O signal status for the axes, error codes	PCU → CPU Unit

Data Transfer Area (DM or EM Area)

k is specified in the operating data area (DM or EM area)

Bit	15 0	Contents	Direction
Word k onwards	Memory operation data	Data for memory operation	CPU Unit → PCU or PCU → CPU Unit

Setup Procedure

Hardware Settings

1, 2, 3...

1. Set the unit number using the rotary switch on the front of the PCU.
2. Mount to a CS1 CPU Rack, a C200H Expansion I/O Rack, a CS1 Expansion Rack, or a SYSMAC BUS Remote I/O Slave Rack. In a basic system, up to 16 C200HW-NC113/213 PCUs or up to 8 C200HW-NC413 PCUs can be mounted. (There are no restrictions on the mounting order.)
3. Connect external I/O for the axes.
4. Connect the Programming Device for the PC.
5. Turn ON power for the PC.
6. Create an I/O table.

Software Settings

1, 2, 3...

1. Make the common parameter and axis parameter settings in words m to m+99 in the DM area. These settings are required for both direct operation and memory operation.
2. Make the operating data area settings in words I to I+33 of the DM or EM area (designated with the common parameters). These settings are required for both direct operation and memory operation.
3. Make the data transfer area settings in words k onwards of the DM or EM area (designated in the operating data area). These settings determine operation when a data transfer operation is executed from the operating memory area. They are not required for direct operation but are required for memory operation (unless required data is transferred using SYSMAC-NCT).

4. Turn the power supply OFF and ON again (i.e., OFF→ON→OFF), or turn ON the Restart Bit (i.e., OFF→ON) for the Unit to enable the settings.

Data Transfer Commands (Memory Operation Only)

Data is transferred using one of the following operations in memory operation. (Not required for direct operation.)

- Using a data transfer command from the operating relay area

(The contents of the data transfer area are transferred by turning ON the WRITE DATA Bit.)

- Using the IOWR instruction

(The data specified with the parameters of the IOWR instruction is transferred.)

- Using SYSMAC-NCT

Operating Commands

The following operating commands are used for both direct operation and memory operation. They are executed by turning ON the respective command bit in the operating memory area (NC113: n to n+4; NC213: n to n+9; NC413: n+19).

- For origin search, turn the ORIGIN SEARCH Bit (X axis: word n, bit 06) from OFF to ON.
- To start direct operation, turn the ABSOLUTE MOVEMENT Bit (X axis: word n, bit 03) or the RELATIVE MOVEMENT Bit (X axis: word n, bit 04) from OFF to ON. To start memory operation, turn the Sequence Number Enable Bit (X axis: word n, bit 00) and the START Bit (X axis: word n, bit 01) or the INDEPENDENT START Bit (X axis: word n, bit 02) from OFF to ON.

Programming

Direct Operation

The following program example transfers position data already set in the DM area in order.

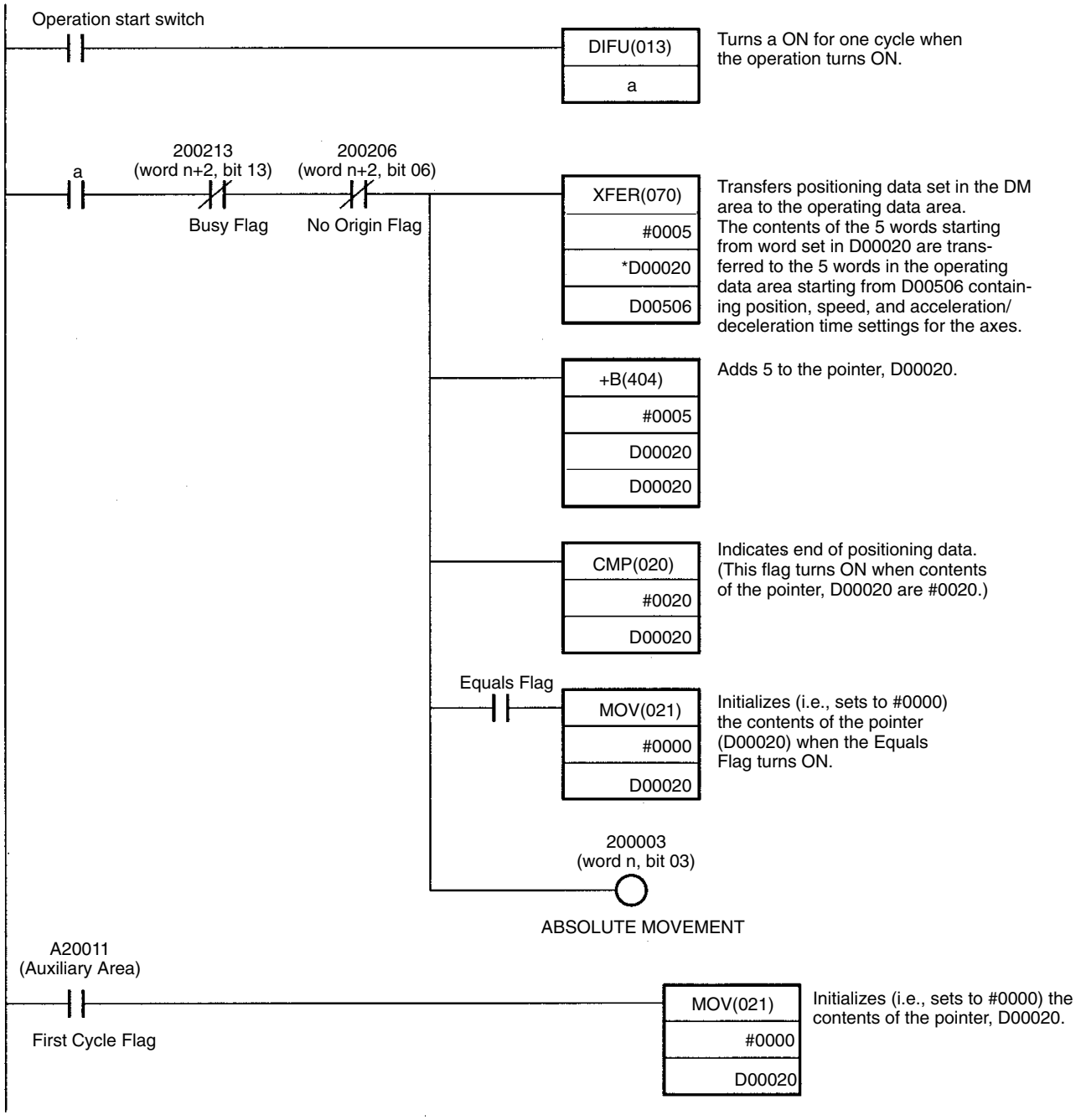

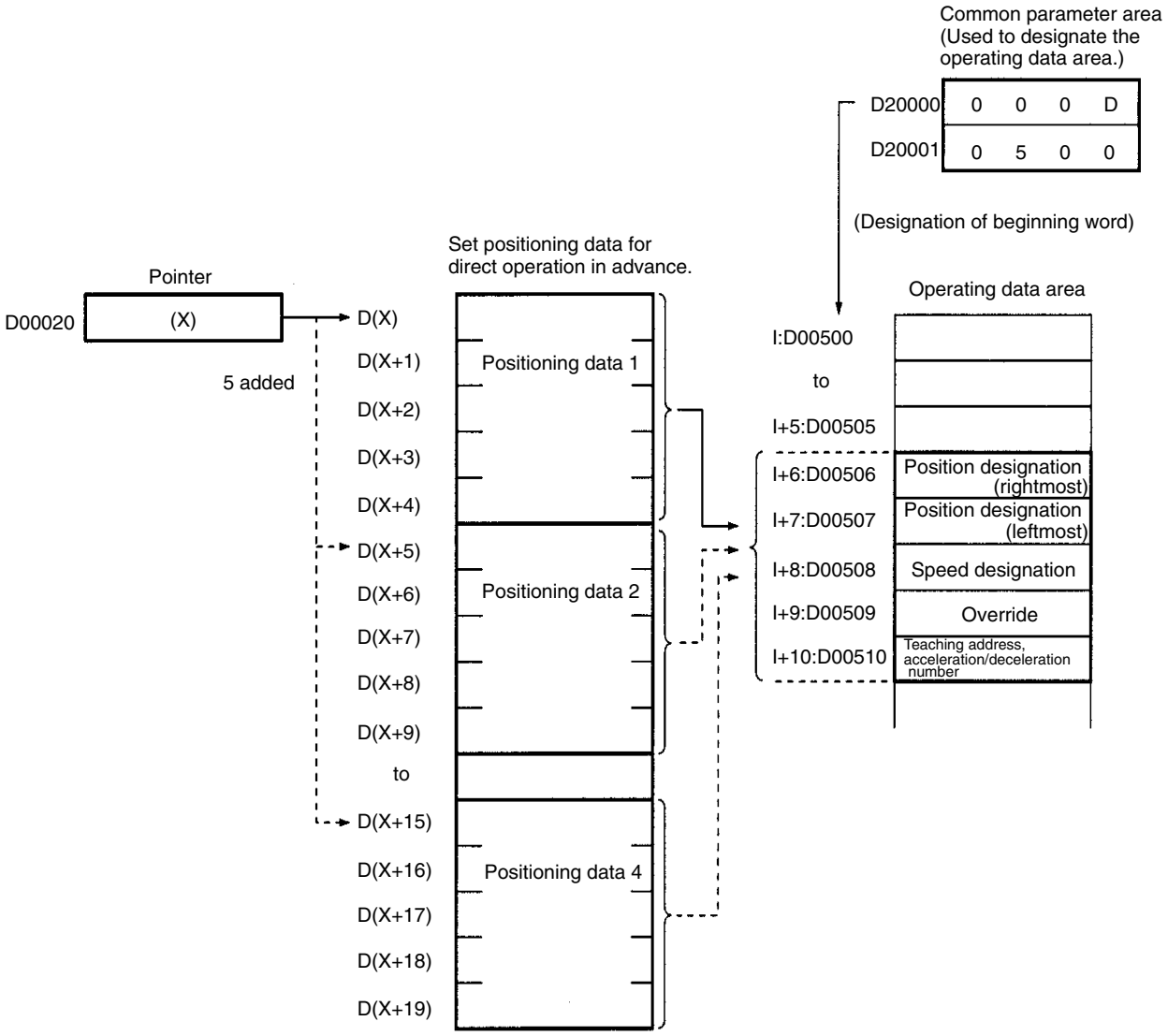

Note If the START Bit or INDEPENDENT START Bit is turned from OFF to ON immediately after power up or restart, with the Sequence Number Enable Bit turned OFF, a sequence number error (error code 8101) will be generated.

Transfer Using the IOWR Instruction

A sample program is provided below for writing the indicated speed data to the Position Control Unit. The beginning word address of the transfer data is to be D00500, and the other settings are as indicated. The data will be transferred to the Position Control Unit designated as unit number 2.

Data	Address (transfer destination)	DM (transfer source)	Setting
Speed #0	1300	D00500	1000
Speed #1	1301	D00501	5500

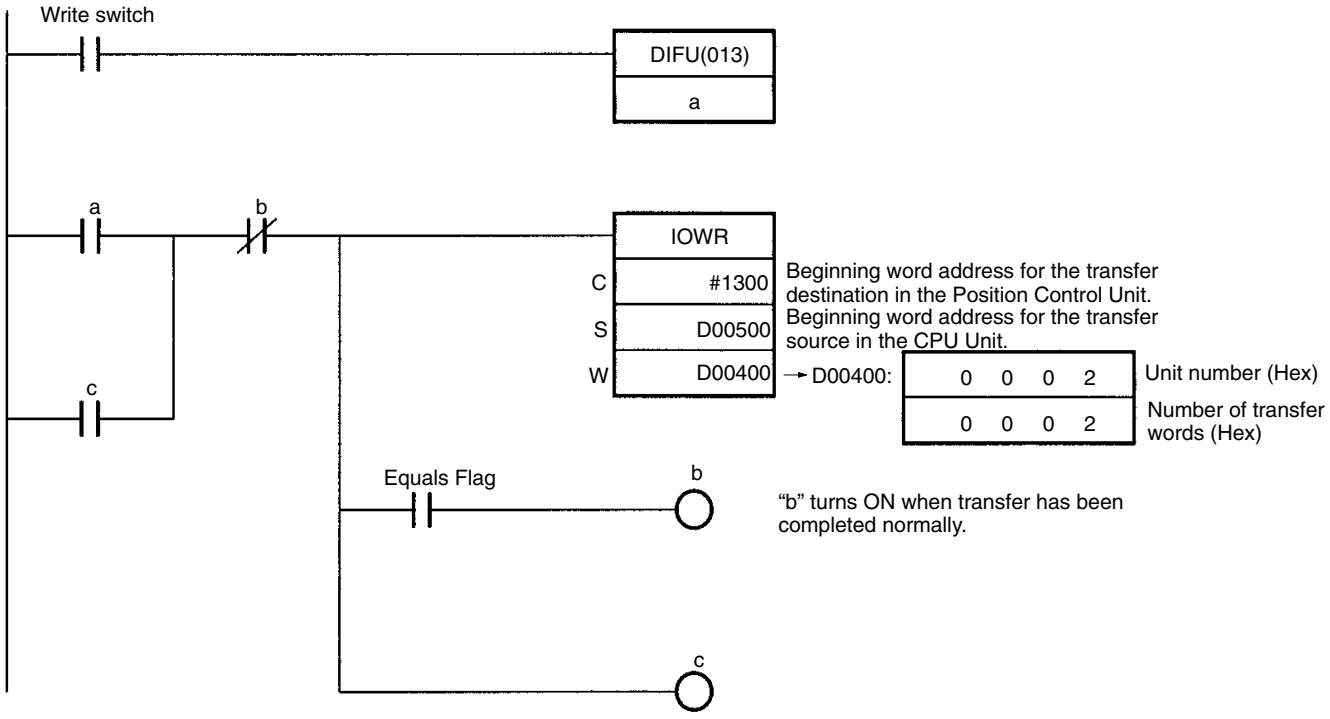

Index

A

acceleration time
  estimating, 251
  setting, 62, 69, 80

acceleration time number, 92

acceleration times #1 through #9, setting, 72

acceleration/deceleration curve, setting, 61, 69, 80

application precautions, xv

automatic completion, in memory operation, 156

axis designation, 90
  for memory operation, 151

axis parameters, coding sheet, 260

axis parameters, 59
  for direct operation, 140
  for memory operation, 154
  settings for origin search, 118

axis parameters area
  details, 77
  setting, 76

B

backlash compensation
  basic explanation, 9
  setting, 68

backlash compensation operation
  explanation, 187
  with linear interpolation, 188

backlash compensation speed, setting, 61, 69, 80

backlash compensation value, setting, 61, 80

bank end completion, in memory operation, 158

basic operations, 48

C

cable length, effect on pulse output, 257

cables, 36

CCW limit, setting, 62, 70, 81

changing present position, basic explanation, 9

checking data, 98

codes, error codes, 231, 253

control bits, RELATIVE MOVEMENT, 48

commands
  ORIGIN RETURN, 134
  ORIGIN SEARCH, 119
    examples in mode 0, 37, 38
    examples in mode 1, 39, 40
    examples in mode 2, 41, 42
    examples in mode 3, 43, 44
  RELATIVE MOVEMENT, 51

common parameter area, example settings, 51

common parameters, 58
  coding sheet, 259

completion code, 91

completion codes, for memory operation, 155

components, 21–23

connections and circuitry, 191

connector pins, arrangement, 24–25

continuous completion
  in memory operation, 157
  with linear interpolation, 160

control bits
  ABSOLUTE MOVEMENT, 84
  direction designation, 85
  error counter reset output, 86
  FORCED INTERRUPT, 87
  INDEPENDENT START, 84
  INTERRUPT FEEDING, 85
  JOG, 85
  origin adjustment command output, 86
  ORIGIN RETURN, 85
  ORIGIN SEARCH, 85
  override enable, 86
  READ DATA, 87
  Read Data, 103
  RELATIVE MOVEMENT, 85
  RELEASE PROHIBIT, 86
  RESET PRESENT POSITION, 85
  SAVE DATA, 87
  Save Data, 114
  sequence number enable, 84
  Special I/O Unit Restart Bits, 244
  START, 84
  STOP, 86
  TEACH, 86
  WRITE DATA, 87
  Write Data, 99

control system principles, 11–12

CS1 Series, 263

CW limit, setting, 62, 70, 81

D

data
checking, 98
reading with IORD, 110
reading with the Read Data bit, 103
saving, 96, 114
time required to read data, 246
time required to write data, 247
transferring, 96
writing with IOWR, 107
writing with the Write Data bit, 100

data addresses, 98

data areas, overall structure, 54

data calculation standards, 245

data, exchanging, 13

data flow diagram, 11

data transfer area
allocation, 58
description, 55
details, 66

deceleration stop
basic explanation, 9
during origin search, 132
during positioning, 177

deceleration stop operation, explanation, 177

deceleration time
estimating, 251
setting, 62, 69, 81

deceleration time number, 92

deceleration times #1 through #9, setting, 73

dimensions, 20

direct operation
explanation, 137
program examples, 206
sample program, 146
setting data, 140, 143
starting, 141

dwell time number, 92

dwell times #1 through #19, setting, 73

E

emergency stop, during origin search, 133

emergency stop input, processing time, 248

emergency stop input, 66, 77

error codes, 231

error codes, 253

error counter reset, wiring, 33

error counter reset output, explanation, 184

error counters, 11

error flags, 231

error indicators, 230
CPU error indicators, 243

external interrupt processing time, 248

F

features, 2

flags
busy, 88
data transferring, 89
deceleration stop execution, 89
error, 88
error flags, 231
for memory operation, 152
no origin, 88
origin stop, 88
positioning completed, 88
Special I/O Unit error flags, 244
teaching completed, 88
waiting for memory operation, 87
zone 0, 88
zone 1, 88
zone 2, 88

flash memory, 55

flash memory, 114

forced interrupt, processing time, 249

forced interrupt operation, explanation, 175

G—H

general specifications, 18

high-speed origin search, setting, 68, 79

origin search high speed
See also high-speed origin search
setting, 61

I—J

I/O electrical specifications, 19–20

I/O settings, 77

inductive loads, 36

initial speed, setting, 60, 68, 79

initial speed number, 92

instruction execution errors
description, 228
instruction execution checks, 235

Intelligent I/O Read, 13

Intelligent I/O Write, 13

interrupt feeding completion, in memory operation, 159

interrupt feeding operation, 173

JOG operation, explanation, 170

L

LED indicators, error indicators, 230

limit input signal type, 66, 77

linear interpolation, 90, 159
  program examples, 211
  with backlash compensation operation, 188
  with continuous completion, 160

low-speed origin search, setting, 68, 79

origin search low speed. *See* low-speed origin search

origin search proximity speed, setting, 61

M

magnetizing distribution circuits, 11

maximum speed, setting, 60, 67, 78

memory operation
  completion codes, 155
  data settings, 154, 162
  explanation, 149
  program examples, 192
  sample program, 165
  starting, 155
  starting direct operation during, 143

modes
  origin search mode 0, connection, 37
  origin search mode 1, connection, 39
  origin search mode 2, connection, 41
  origin search mode 3, connection, 43

multiple starts, with direct operation, 142

N–O

noise (electronic), prevention, 36

open-loop systems, 12

operating data area
  beginning word, 75
  description, 55
  designation, 75
  details, 64, 89
  settings for direct operation, 140

operating environment precautions, xv

operating memory area
  allocation, 57
  description, 55
  details, 63, 83
  settings for direct operation, 140, 154
  settings for origin search, 118

operation mode
  description of operation modes, 82
  setting, 60, 67, 78

operation modes, and operation patterns, 124

operation patterns, 124, 129

origin adjustment command output, explanation, 184

origin compensation
  and operation patterns, 129
  setting, 80

origin compensation value, 129
  setting, 61, 68

origin detection method, setting, 67, 78

origin proximity signal type, 66, 77

origin return, 134

origin search
  basic explanation, 8
  data settings, 118
  effect of deceleration stop, 132
  effect of emergency stop, 133
  patterns, 120
  program examples, 216
  with origin proximity signal, 119
  without origin proximity signal, 119

origin search direction, setting, 67, 78

origin search operation, setting, 67, 78

origin signal type, 66, 77

origin undefined designation, 66, 77

output code, 90

output code setting, 87

output pulse selection, 77

override, basic explanation, 9

override operation
  explanation, 181
  program example, 218

P

parameter areas
  allocation, 56
  description, 55

parameter coding sheets, 259

pass time, and operation time, 247

PCU mounting position setting, 75

performance specifications, 18–19

positioning
  with absolute value, 7
  with incremental value, 7

positioning accuracy, computation of, 12

positioning monitor time, setting, 62, 69, 81

positioning sequence details, 89

positions #0 through #99, setting, 72

power amplifiers, 11

power lines, 36

power supply, 31, 36
  24 VDC, 32
  24-VDC, 31, 32

precautions
application, xv
general, xiii
operating environment, xv

present position output, 89

program examples, 189
cancelling positioning, 200
changing speed during continuous output, 218
checking positioning operations, 192
copying data, 221
inching, 209
origin search using limit input, 216
positioning with positions in DM, 206
repeat operation, 196
two–axis linear interpolation, 211

pulse frequency, computation of, 12

pulse generators, 11

pulse output, effect of cable length, 257

pulse output selection, 66

pulse trains, 11, 12

R

reading data
example program, 105, 112
time required, 246
with IORD, 110
with Read Data bit, 103

releasing pulse output prohibition, explanation, 182

RESET PRESENT POSITION operation, explanation, 180

resistors, built-in, 31

response time
for speed change, 249
for target position change, 249

Restart Bits, Special I/O Unit Restart Bits, 244

rotary encoders, 11

S

saving data, 96, 114
program examples, 221

sequences #0 through #99, setting, 70

sequence format, 90

sequence number setting, 87

servomotor drivers, 11, 44

servomotors, 11

signals
direction, connecting, 32
external sensor, 37
origin, 38
origin adjustment, 44
origin proximity, 38, 40, 42, 44, 119
origin search completed, 35
output pulses, connecting, 32
positioning completed, 35, 44
Z-phase, 40, 42

solenoids, 36

specifications, 18–20

speed calculations, 245

speed control completion, in memory operation, 158

speeds #0 through #99, setting, 71

startup errors
data check at startup, 232
description, 228

startup procedures, 190

stepping motor drivers, 2, 11

stepping motors, 11, 12
angle of rotation, 12
basic system configuration, 49
direct operation, 48
used with external sensor, 37
with continuous linear interpolation, 160

surge absorbers, 36

SYSMAC-NCT Support Tool
creating and transferring data, 113
setting data with, 93

system configuration, basic stepping motor configuration, 49

T

tachogenerators, 11

target speed number, 92

teaching, basic explanation, 8

teaching operation, explanation, 171

terminals, with and without resistance, 27

terminating completion, in memory operation, 156

timing charts
for deceleration stop operation, 180
for direct operation, 144
for error counter reset output, 185
for forced interrupt operation, 176
for interrupt feeding operation, 175
for JOG operation, 171
for memory operation, 162
for origin adjustment command output, 185
for origin return, 135
for origin search, 130
for override operation, 182
for releasing pulse output prohibition, 183
for RESET PRESENT POSITION, 181
for teaching operation, 172

transferring data, 96
program examples, 221
time required, 246

troubleshooting, 227

W–Z

wiring
basic wiring for stepping motors, 50
error counter reset, 33
I/O circuit diagrams, 27
precautions, 36–46

writing data
example program, 103, 109
time required, 247
with IOWR, 107
with Write Data bit, 100

zones, basic explanation, 9

zones #1 through #2, setting, 74

Revision History

A manual revision code appears as a suffix to the catalog number on the front cover of the manual.

Cat. No. W334-E1-04

Revision code

The following table outlines the changes made to the manual during each revision. Page numbers refer to the previous version.

Revision code	Date	Revised content
1	October 1997	Original production
2	May 1998	**Page 3:** Information on SYSMAC-NCT added at the top of the page. **Page 26:** Information in *Assembling Connectors* corrected. **Page 27:** Circuit diagram in *Outputs* corrected. **Page 69:** Note for *Sequence #99* added. **Page 73:** Table in *Beginning Word of Operating Data Area* changed. **Page 85:** Listed models corrected for the output. **Page 87:** Note for *Axis Designation* added. **Page 106:** Information for work bit 23502 corrected in the diagram. **Page 109:** Note for *Creating and Transferring Data* added. **Page 124:** Information in *Origin Detection Method: 3* corrected. **Page 129:** The Error Flag condition in the timing chart corrected. **Page 136:** POSITIONING COMPLETED item added to the operating memory area table. **Page 138:** Note in *7-3-3 Multiple Starts with Direct Operation* corrected. Information on multiple reversals added to *7-3-4 Multiple Start Operating Patterns*. **Page 148:** The output code in *Axis Executing Start* table corrected. Bit 12, Error Flag added to the *Operating Axis* table. Note on the Error Flag added. **Page 151:** The sequence number enable bit corrected from 03 to 00 in the *Operating Memory Area* table. **Page 152:** Note in *Automatic Completion (Code 1)* corrected. **Page 155:** The first chart in *Interrupt Feeding Completion (Codes 5 and 6)* corrected. **Page 163:** The addresses in the *Positioning Sequences* table corrected. **Page 166:** Last sentence of *Operating Memory Area* corrected. Last sentence of *Operating Data Area* corrected. **Page 169:** Information on interrupt feeding corrected in *9-3-1 Outline of Operation*. **Page 174:** First two paragraphs of *Deceleration Stop with Linear Interpolation* corrected. **Page 178:** The speed designation data configuration corrected for the *Operating Data Area* table. Software limit information removed from *9-8 Releasing Pulse Output Prohibition*. **Page 183:** The second paragraph of *9-10-1 Outline of Operation* corrected. “500 pps” corrected to “250 pps” in the last sentence of *9-10-1 Outline of Operation*. **Page 229:** “Origin search” corrected to “Acceleration/deceleration data” for code 1332. **Page 238:** Information added to *Special I/O Unit error* in the table.
3	August 2000	**Page xv:** Reference to information on CS1-series PCs added. **Page 16:** Information on CS1 PCs added. **Page 26:** Information on connector models added. **Page 37:** “Photoelectric Sensor” changed to “Proximity Sensor.” **Page 45:** Connection example for unused axes and information on Relay Units added. **Page 55:** Information added to *Note 1*. **Pages 62, 95, 99:** Information on restrictions on addresses that can be used for data transfer added. **Page 63:** “ORIGIN RETURN” added in 2 places in table. **Page 66:** Information on using the IOWR instruction added in 2 places. **Page 85:** Changes made to the information on WRITE DATA, READ DATA, and SAVE DATA Bits. **Page 86:** Information on Busy Flag added. **Page 90:** Information on data settings for unused axes added. **Page 95:** Information on the timing of the IOWR instruction added. **Pages 105, 114:** Information on transferring the origin search high speed and origin search proximity speed settings added. Reference added. **Page 105:** Reference added. **Page 108:** Information on the timing of the IORD instruction added. **Page 109:** Minor changes made to ladder diagram. **Page 157:** Bottom diagram removed. **Page 170:** Minor correction made to bottom table. **Page 187:** Changes made to *Note*. **Pages 228, 229:** Information on unused axes added in 3 places.

Revision code	Date	Revised content
04	July 2003	The following changes and corrections were made. **Page xiv:** Precaution added. **Page xv:** Information in warning changed. **Pages 41, 43, 151, 154, 156, 157, and 159:** Note added. **Page 46:** Models added. **Page 88:** Information added for bit 05. **Page 89:** Information added for bit 15. **Page 182:** Introduction of *9-8 Releasing Pulse Output Prohibition* changed. **Page 183:** Illustration changed. **Pages 251 and 252:** Appendix changed.

OMRON Corporation
FA Systems Division H.Q.
66 Matsumoto
Mishima-city, Shizuoka 411-8511
Japan
Tel: (81)55-977-9181/Fax: (81)55-977-9045

Regional Headquarters

OMRON EUROPE B.V.
Wegalaan 67-69, NL-2132 JD Hoofddorp
The Netherlands
Tel: (31)2356-81-300/Fax: (31)2356-81-388

OMRON ELECTRONICS LLC
1 East Commerce Drive, Schaumburg, IL 60173
U.S.A.
Tel: (1)847-843-7900/Fax: (1)847-843-8568

OMRON ASIA PACIFIC PTE. LTD.
83 Clemenceau Avenue,
#11-01, UE Square,
Singapore 239920
Tel: (65)6835-3011/Fax: (65)6835-2711

OMRON

Authorized Distributor:

Cat. No. W334-E1-04

Note: Specifications subject to change without notice.

Printed in Japan

Cat. No. W334-E1-04 C200HW-NC113/NC213/NC413 Position Control Units OPERATION MANUAL OMRON

Read and Understand this Manual

Please read and understand this manual before using the product. Please consult your OMRON representative if you have any questions or comments.

Warranty and Limitations of Liability

WARRANTY

OMRON's exclusive warranty is that the products are free from defects in materials and workmanship for a period of one year (or other period if specified) from date of sale by OMRON.

OMRON MAKES NO WARRANTY OR REPRESENTATION, EXPRESS OR IMPLIED, REGARDING NON-INFRINGEMENT, MERCHANTABILITY, OR FITNESS FOR PARTICULAR PURPOSE OF THE PRODUCTS. ANY BUYER OR USER ACKNOWLEDGES THAT THE BUYER OR USER ALONE HAS DETERMINED THAT THE PRODUCTS WILL SUITABLY MEET THE REQUIREMENTS OF THEIR INTENDED USE. OMRON DISCLAIMS ALL OTHER WARRANTIES, EXPRESS OR IMPLIED.

LIMITATIONS OF LIABILITY

OMRON SHALL NOT BE RESPONSIBLE FOR SPECIAL, INDIRECT, OR CONSEQUENTIAL DAMAGES, LOSS OF PROFITS OR COMMERCIAL LOSS IN ANY WAY CONNECTED WITH THE PRODUCTS, WHETHER SUCH CLAIM IS BASED ON CONTRACT, WARRANTY, NEGLIGENCE, OR STRICT LIABILITY.

In no event shall the responsibility of OMRON for any act exceed the individual price of the product on which liability is asserted.

IN NO EVENT SHALL OMRON BE RESPONSIBLE FOR WARRANTY, REPAIR, OR OTHER CLAIMS REGARDING THE PRODUCTS UNLESS OMRON'S ANALYSIS CONFIRMS THAT THE PRODUCTS WERE PROPERLY HANDLED, STORED, INSTALLED, AND MAINTAINED AND NOT SUBJECT TO CONTAMINATION, ABUSE, MISUSE, OR INAPPROPRIATE MODIFICATION OR REPAIR.

Application Considerations

SUITABILITY FOR USE

OMRON shall not be responsible for conformity with any standards, codes, or regulations that apply to the combination of products in the customer's application or use of the products.

At the customer's request, OMRON will provide applicable third party certification documents identifying ratings and limitations of use that apply to the products. This information by itself is not sufficient for a complete determination of the suitability of the products in combination with the end product, machine, system, or other application or use.

The following are some examples of applications for which particular attention must be given. This is not intended to be an exhaustive list of all possible uses of the products, nor is it intended to imply that the uses listed may be suitable for the products:

- Outdoor use, uses involving potential chemical contamination or electrical interference, or conditions or uses not described in this manual.
- Nuclear energy control systems, combustion systems, railroad systems, aviation systems, medical equipment, amusement machines, vehicles, safety equipment, and installations subject to separate industry or government regulations.
- Systems, machines, and equipment that could present a risk to life or property.

Please know and observe all prohibitions of use applicable to the products.

NEVER USE THE PRODUCTS FOR AN APPLICATION INVOLVING SERIOUS RISK TO LIFE OR PROPERTY WITHOUT ENSURING THAT THE SYSTEM AS A WHOLE HAS BEEN DESIGNED TO ADDRESS THE RISKS, AND THAT THE OMRON PRODUCTS ARE PROPERLY RATED AND INSTALLED FOR THE INTENDED USE WITHIN THE OVERALL EQUIPMENT OR SYSTEM.

PROGRAMMABLE PRODUCTS

OMRON shall not be responsible for the user's programming of a programmable product, or any consequence thereof.

Disclaimers

CHANGE IN SPECIFICATIONS

Product specifications and accessories may be changed at any time based on improvements and other reasons.

It is our practice to change model numbers when published ratings or features are changed, or when significant construction changes are made. However, some specifications of the products may be changed without any notice. When in doubt, special model numbers may be assigned to fix or establish key specifications for your application on your request. Please consult with your OMRON representative at any time to confirm actual specifications of purchased products.

DIMENSIONS AND WEIGHTS

Dimensions and weights are nominal and are not to be used for manufacturing purposes, even when tolerances are shown.

PERFORMANCE DATA

Performance data given in this manual is provided as a guide for the user in determining suitability and does not constitute a warranty. It may represent the result of OMRON's test conditions, and the users must correlate it to actual application requirements. Actual performance is subject to the OMRON Warranty and Limitations of Liability.

ERRORS AND OMISSIONS

The information in this manual has been carefully checked and is believed to be accurate; however, no responsibility is assumed for clerical, typographical, or proofreading errors, or omissions.