Cat. No. W347-E1-06

生産終了
DISCONTINUED

C200HW-DRT21
CQM1-DRT21
DRT1 Series

DeviceNet Slaves

OPERATION MANUAL

OMRON

C200HW-DRT21
CQM1-DRT21
DRT1 Series
DeviceNet Slaves

Operation Manual

Revised September 2003

Notice:

OMRON products are manufactured for use according to proper procedures by a qualified operator and only for the purposes described in this manual.

The following conventions are used to indicate and classify precautions in this manual. Always heed the information provided with them. Failure to heed precautions can result in injury to people or damage to property.

⚠ DANGER Indicates an imminently hazardous situation which, if not avoided, will result in death or serious injury.

⚠ WARNING Indicates a potentially hazardous situation which, if not avoided, could result in death or serious injury.

⚠ Caution Indicates a potentially hazardous situation which, if not avoided, may result in minor or moderate injury, or property damage.

OMRON Product References

All OMRON products are capitalized in this manual. The word “Unit” is also capitalized when it refers to an OMRON product, regardless of whether or not it appears in the proper name of the product.

The abbreviation “Ch,” which appears in some displays and on some OMRON products, often means “word” and is abbreviated “Wd” in documentation in this sense.

The abbreviation “PLC” means Programmable Controller. “PC” is used, however, in some Programming Device displays to mean Programmable Controller.

Visual Aids

The following headings appear in the left column of the manual to help you locate different types of information.

Note Indicates information of particular interest for efficient and convenient operation of the product.

1,2,3... 1. Indicates lists of one sort or another, such as procedures, checklists, etc.

Trademarks and Copyrights

COMBICON is a registered trademark of Phoenix Contact GmbH & Co.

DeviceNet is a registered trademark of the Open DeviceNet Vendor Association, Inc.

PowerTap is a registered trademark of the Allen-Bradley Company, Inc.

© OMRON, 1998

All rights reserved. No part of this publication may be reproduced, stored in a retrieval system, or transmitted, in any form, or by any means, mechanical, electronic, photocopying, recording, or otherwise, without the prior written permission of OMRON.

No patent liability is assumed with respect to the use of the information contained herein. Moreover, because OMRON is constantly striving to improve its high-quality products, the information contained in this manual is subject to change without notice. Every precaution has been taken in the preparation of this manual. Nevertheless, OMRON assumes no responsibility for errors or omissions. Neither is any liability assumed for damages resulting from the use of the information contained in this publication.

TABLE OF CONTENTS

PRECAUTIONS xi

1 Intended Audience xii
2 General Precautions xii
3 Safety Precautions xii
4 Operating Environment Precautions xii
5 Application Precautions xiii
6 EC Directives xiv
7 DeviceNet Manuals xv

SECTION 1
Features and System Configuration 1

1-1 Overview of DeviceNet 2

SECTION 2
Example System Setup 13

2-1 Basic Procedures and Configuration Examples 14
2-2 Preparations 15
2-3 Setting and Wiring Hardware 16
2-4 Starting Communications 20
2-5 Checking Operations 24

SECTION 3
Common Slave Specifications 27

3-1 Common Slave Specifications 28

SECTION 4
General-purpose Slaves 31

4-1 Common Specifications for General-purpose Slaves 33
4-2 Connecting Communications Cables to General-purpose Slaves 34
4-3 Transistor Remote I/O Terminals 40
4-4 Transistor Remote I/O Terminals with 3-tier I/O Terminal Blocks 62
4-5 Transistor Remote I/O Terminals with Connectors 87
4-6 Remote Adapters 111
4-7 Sensor Terminals 124
4-8 Analog I/O Terminals 136
4-9 Temperature Input Terminals 157
4-10 CQM1 I/O Link Unit 171

TABLE OF CONTENTS

SECTION 5
Environment-resistive and Waterproof Slaves 175

5-1 Environment-resistive Slave Specifications 176
5-2 Connecting Communications Cables to Environment-resistive Slaves 177
5-3 Environment-resistive Terminals (IP66) 179
5-4 Waterproof Terminals (IP67) 200
5-5 B7AC Interface Units 215

SECTION 6
Special I/O Slave Units Specifications 229

6-1 C200H I/O Link Units 230
6-2 RS-232C Units 260

SECTION 7
Communications Timing 299

7-1 Remote I/O Communications Characteristics 300
7-2 Message Communications Time 309

SECTION 8
Troubleshooting and Maintenance 311

8-1 Indicators and Error Processing 312
8-2 Troubleshooting 313
8-3 Maintenance 318

Appendices

A Node Address Settings Table 321
B Using Another Company's Master Unit 323
C Connectable Devices and Device Current Consumptions 343
D Precautions when Connecting Two-wire DC Sensors 353

Glossary 355

Index 357

Revision History 359

About this Manual:

This manual describes the installation and operation of the DeviceNet Slave Units and includes the sections described below. Please read this manual carefully and be sure you understand the information provided before attempting to install and operate the DeviceNet Slave Units. **Be sure to read the precautions provided in the first section.**

The following manuals are also cover information related to DeviceNet applications. Use the *DeviceNet Operation Manual* together with other required manuals.

Manual	Contents	Cat. No.
DeviceNet Operation Manual	Describes the configuration and construction of a DeviceNet network, including installation procedures and specifications for cables, connectors, and other connection devices, as well as information on the communications power supply.	W267
DeviceNet Masters Operation Manual	Describes the models, specifications, functions, and application methods of C200HX/HG/HE, CVM1, and CV-series DeviceNet Master Units.	W379
CS1 Series DeviceNet Unit Operation Manual	Describes the models, specifications, functions, and application methods of the CS1-series DeviceNet Unit.	W380
DeviceNet Slaves Operation Manual (this manual)	Describes the models, specifications, functions, and application methods of DeviceNet Slaves.	W347
DeviceNet Configurator Operation Manual (Ver. 2)	Describes the operation of the DeviceNet Configurator to allocate remote I/O areas according to application needs, as well as procedures to set up a DeviceNet network with more than one master.	W382
DeviceNet MULTIPLE I/O TERMINAL Operation Manual	Describes the models, specifications, functions, and application methods of the DeviceNet MULTIPLE I/O TERMINALs.	W348

Precautions provides precautions for the correct and safe application of the products.

Section 1 provides an overview of the DeviceNet Network, including features, specifications, and the system configurations.

Section 2 provides information on hardware aspects of Masters and Slaves connected to a DeviceNet Network to ensure the proper operation of the system. Included are system configuration examples, basic procedures for wiring, mounting and setting Master and Slave Units, connecting cables and power supplies, creating I/O tables, and creating and registering scan lists

Section 3 provides specifications that are common to all Slaves.

Section 4 provides specifications and describes the components, indicators, switch settings, and other aspects of General-purpose Slaves.

Section 5 provides specifications and describes the components, indicators, switch settings, and other aspects of Environment-resistive Slaves.

Section 6 provides specifications for the C200H I/O Link Unit and the RS-232C Unit.

Section 7 describes the time required for a complete communications cycle, for an output response to be made to an input, to start the system, and to send a message.

Section 8 describes error processing, periodic maintenance operations, and troubleshooting procedures needed to keep the DeviceNet Network operating properly. We recommend reading through the error processing procedures before operation so that operating errors can be identified and corrected more quickly.

The Appendices provide information on using masters from other companies, node address settings, Slave device protocols necessary for multi-vendor applications, standard models, device current consumptions and connecting 2-wire DC Sensors.

⚠ **WARNING** Failure to read and understand the information provided in this manual may result in personal injury or death, damage to the product, or product failure. Please read each section in its entirety and be sure you understand the information provided in the section and related sections before attempting any of the procedures or operations given.

PRECAUTIONS

This section provides general precautions for using the Programmable Controller (PLC) Systems and related devices.

The information contained in this section is important for the safe and reliable application of PLC Systems. You must read this section and understand the information contained before attempting to set up or operate a PLC System.

1 Intended Audience xii
2 General Precautions xii
3 Safety Precautions xii
4 Operating Environment Precautions xii
5 Application Precautions xiii
6 EC Directives xiv
7 DeviceNet Manuals xv

1 Intended Audience

This manual is intended for the following personnel, who must also have knowledge of electrical systems (an electrical engineer or the equivalent).

- Personnel in charge of installing FA systems.
- Personnel in charge of designing FA systems.
- Personnel in charge of managing FA systems and facilities.

2 General Precautions

The user must operate the product according to the performance specifications described in the operation manuals.

Before using the product under conditions which are not described in the manual or applying the product to nuclear control systems, railroad systems, aviation systems, vehicles, combustion systems, medical equipment, amusement machines, safety equipment, and other systems, machines, and equipment that may have a serious influence on lives and property if used improperly, consult your OMRON representative.

Make sure that the ratings and performance characteristics of the product are sufficient for the systems, machines, and equipment, and be sure to provide the systems, machines, and equipment with double safety mechanisms.

This manual provides information for programming and operating OMRON PLC Systems. Be sure to read this manual before attempting to use the software and keep this manual close at hand for reference during operation.

⚠ WARNING It is extremely important that a PLC System and all PLC Units be used for the specified purpose and under the specified conditions, especially in applications that can directly or indirectly affect human life. You must consult with your OMRON representative before applying a PLC System to the abovementioned applications.

3 Safety Precautions

⚠ WARNING Never attempt to disassemble any Units while power is being supplied. Doing so may result in serious electrical shock or electrocution.

⚠ WARNING Never touch any of the terminals while power is being supplied. Doing so may result in serious electrical shock or electrocution.

4 Operating Environment Precautions

Do not operate the control system in the following places.

- Locations subject to direct sunlight.
- Locations subject to temperatures or humidity outside the range specified in the specifications.
- Locations subject to condensation as the result of severe changes in temperature.
- Locations subject to corrosive or flammable gases.
- Locations subject to dust (especially iron dust) or salts.
- Locations subject to shock or vibration.

- Locations subject to exposure to water, oil, or chemicals.
- Take appropriate and sufficient countermeasures when installing systems in the following locations.
  - Locations subject to static electricity or other forms of noise.
  - Locations subject to strong electromagnetic fields.
  - Locations subject to possible exposure to radioactivity.
  - Locations close to power supplies.

⚠ **Caution** The operating environment of the PLC System can have a large effect on the longevity and reliability of the system. Improper operating environments can lead to malfunction, failure, and other unforeseeable problems with the PLC System. Be sure that the operating environment is within the specified conditions at installation and remains within the specified conditions during the life of the system.

5 Application Precautions

Observe the following precautions when using a PLC System.

⚠ **WARNING** Failure to abide by the following precautions could lead to serious or possibly fatal injury. Always heed these precautions.

- Always ground the system to 100 Ω or less when installing the system to protect against electrical shock.
- Always turn OFF the power supply to the PLC System before attempting any of the following. Performing any of the following with the power supply turned on may lead to electrical shock:
  - Mounting or removing any Units (e.g., Power Supply Units, I/O Units, CPU Unit, etc.) or memory cassettes.
  - Assembling any devices or racks.
  - Connecting or disconnecting any cables or wiring.

⚠ **Caution** Failure to abide by the following precautions could lead to faulty operation of the PLC System or could damage the PLC or PLC Units. Always heed these precautions.

- Use the Units only with the power supplies and voltages specified in the operation manuals. Other power supplies and voltages may damage the Units.
- Take measures to stabilize the power supply to conform to the rated supply if it is not stable.
- Provide circuit breakers and other safety measures to provide protection against shorts in external wiring.
- Do not apply voltages exceeding the rated input voltage to Input Units. The Input Units may be destroyed.
- Do not apply voltages exceeding the maximum switching capacity to Output Units. The Output Units may be destroyed.
- Always disconnect the LG terminal when performing withstand voltage tests.

- Install all Units according to instructions in the operation manuals. Improper installation may cause faulty operation.
- Provide proper shielding when installing in the following locations:
  - Locations subject to static electricity or other sources of noise.
  - Locations subject to strong electromagnetic fields.
  - Locations subject to possible exposure to radiation.
  - Locations near to power supply lines.
- Be sure to tighten Backplane screws, terminal screws, and cable connector screws securely.
- Do not attempt to take any Units apart, to repair any Units, or to modify any Units in any way.

⚠ **Caution** The following precautions are necessary to ensure the general safety of the system. Always heed these precautions.

- Provide double safety mechanisms to handle incorrect signals that can be generated by broken signal lines or momentary power interruptions.
- Provide external interlock circuits, limit circuits, and other safety circuits in addition to any provided within the PLC System to ensure safety.
- Always follow electrical specifications for terminal polarity, communications path wiring, power supply wiring, and I/O jumpers. Incorrect wiring can cause failures.
- Although the Environment-resistive Slaves have IP66 or IP67 degree of protection, do not use them in applications where the Slave is always submerged in water.

6 EC Directives

DeviceNet products conform to EMS and low-voltage level directives as follows:

EMC Directives

OMRON devices that comply with EC Directives also conform to the related EMC standards, so that they can more easily be built in to other devices or the overall machine. The actual products have been checked for conformity to EMC standards. Whether they conform to the standards in the system used by the customer, however, must be checked by the customer.

EMC-related performance of the OMRON devices that comply with EC Directives will vary depending on the configuration, wiring, and other conditions of the equipment or control panel on which the OMRON devices are installed. The customer must, therefore, perform the final check to confirm that devices and the overall machine conform to EMC standards.

Low-voltage Level Directives

Always ensure that devices operating at voltages of 50 to 1,000 V AC and 75 to 1,500 V DC meet the necessary safety standard for the PLC (EN61131-2).

DeviceNet products that comply with EC Directives must be installed as follows:

1,2,3...

1. DeviceNet Units are designed for installation inside control panels. All DeviceNet Units must be installed within control panels.

2. Use reinforced insulation or double insulation for the DC power supplies used for the communications power supply, internal circuit power supply, and the I/O power supplies.
3. DeviceNet products that comply with EC Directives also conform to the Common Emission Standard (EN50081-2). Radiated emission characteristics (10-m regulations) may vary depending on the configuration of the control panel used, other devices connected to the control panel, wiring, and other conditions. You must therefore confirm that the overall machine or equipment complies with EC Directives.
4. DeviceNet products that comply with EC Directives have configurations with less than 30 m of I/O wiring, and less than 10 m of power supply wiring.

The following examples shows how to reduce noise.

1,2,3... 1. Noise from the communications cable can be reduced by installing a ferrite core on the communications cable within 10 cm of the DeviceNet Master Unit.

Ferrite Core (Data Line Filter): LF130B (manufactured by Easy Magnet Co.)

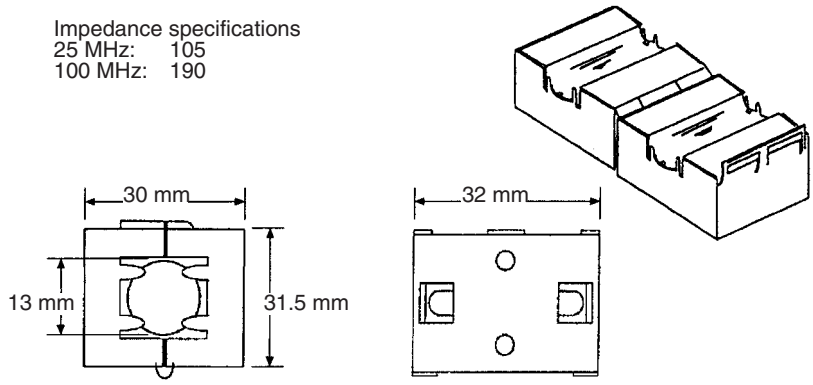

2. Wire the control panel with as thick and short cables as possible and ground to 100 Ω min.
3. Keep DeviceNet communications cables as short as possible and ground to 100 Ω min.

7 DeviceNet Manuals

The following manuals are available for information relating to DeviceNet. Be sure to thoroughly read and understand the applicable manuals before installing or operating DeviceNet devices and make sure that you are using the most recent version of the manual.

DeviceNet Operation Manual (W267)

Describes the functions and applications of DeviceNet including available Master Units, their specifications, functions, operating procedures, and applications. Always read this manual thoroughly before installing or operating DeviceNet devices.

DeviceNet Slaves Operation Manual (W347)

Describes available Slave Units, their specifications, functions, operating procedures, and applications. This manual has been separately produced in response to the increase in Slave Unit models since the production of the *DeviceNet Operation Manual (W267)*. Use this manual in conjunction with the DeviceNet *Operation Manual (W267)*.

DeviceNet Configurator Operation Manual (W328)

Describes the operating procedures of the DeviceNet Configurator, which is used to freely allocate remote I/O areas, and allows multiple Master Units to be mounted to one PLC or connected to one DeviceNet Network to perform independent remote I/O communications. Refer to this manual when operating a DeviceNet Network with a DeviceNet Configurator.

MULTIPLE I/O TERMINAL Operation Manual (W348)

Describes available MULTIPLE I/O TERMINALs, their specifications, functions, operating procedures, and applications. This manual has been separately produced in response to the increase in MULTIPLE I/O TERMINAL models since the production of the *DeviceNet Operation Manual (W267)*. Use this manual in conjunction with the DeviceNet *Operation Manual (W267)*.

SECTION 1
Features and System Configuration

This section provides an overview of the DeviceNet Network, including features, specifications, and the system configurations.

1-1 Overview of DeviceNet 2
1-1-1 DeviceNet Features 2
1-1-2 Slaves 8
1-1-3 Slave Mounting and Connection Methods 11

1-1 Overview of DeviceNet

DeviceNet is a multi-bit, multi-vendor network that combines controls and data on a machine/line-control level and that conforms to the DeviceNet open field network specifications. DeviceNet has the following features.

1-1-1 DeviceNet Features

Multi-vendor Network

The DeviceNet conforms to the DeviceNet open field network specification, which means that devices (Masters and Slaves) produced by other manufacturers can also be connected to the Network. A wide range of field-level applications can thus be supported by combining valve devices, sensors, and other devices.

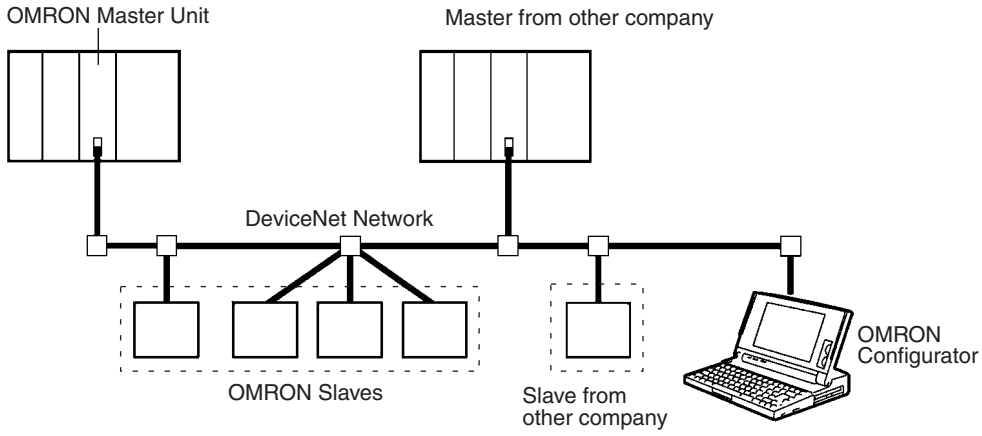

Simultaneous Remote I/O and Message Services

Remote I/O communications to constantly exchange I/O data between the PLC and Slaves can be executed simultaneously with message communications, to send/receive Master Unit data as required by the application. A DeviceNet Network can thus be installed to flexibly handle applications that require both bit data and message data. Message communications can be achieved either by using OMRON's FINS commands or by using explicit DeviceNet messages.

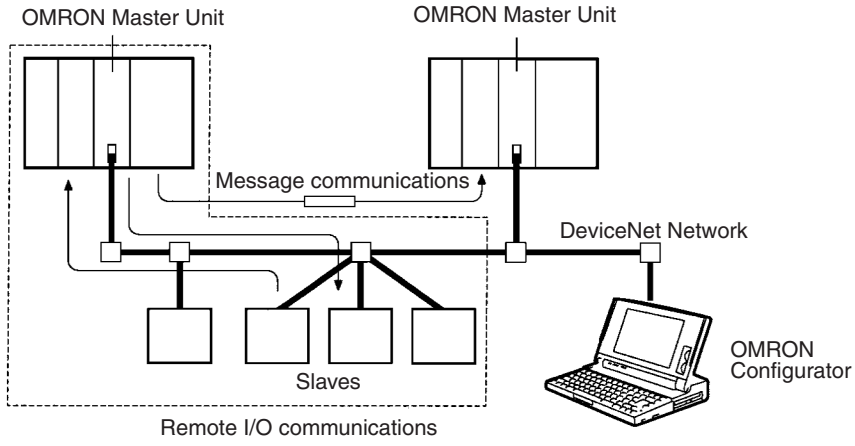

Connect Multiple PLCs to the Same Network

A Configurator (sold separately) can be used to enable connection of more than one Master to the Network, allowing message communications between PLCs and between multiple groups of PLCs and Slaves. This allows the DeviceNet Network to be used as a common bus to unify controls while reducing wiring.

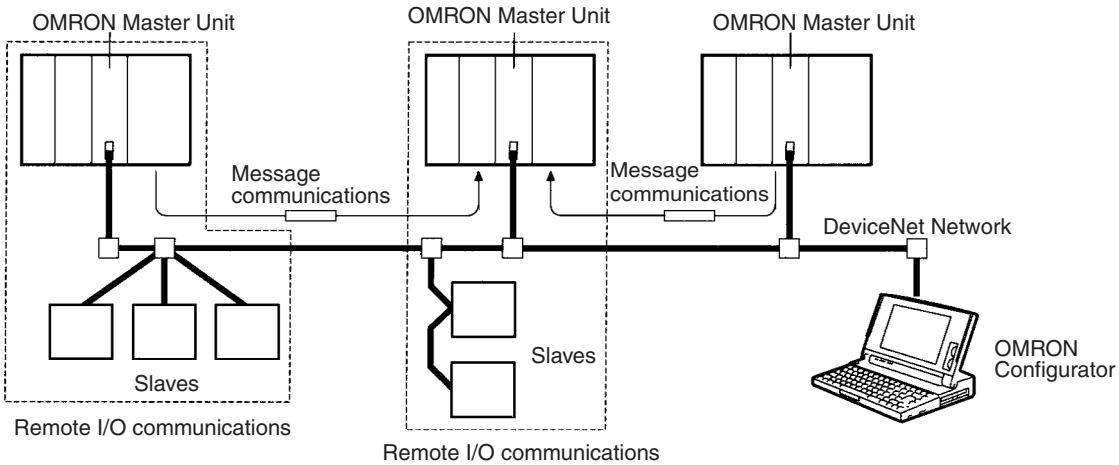

Multiple Master Units Handle Multi-point Control and Line Expansions

A Configurator (sold separately) can be used to enable mounting more than one Master Unit to a single PLC, allowing control of many more points. This feature can easily handle line expansions and other applications.

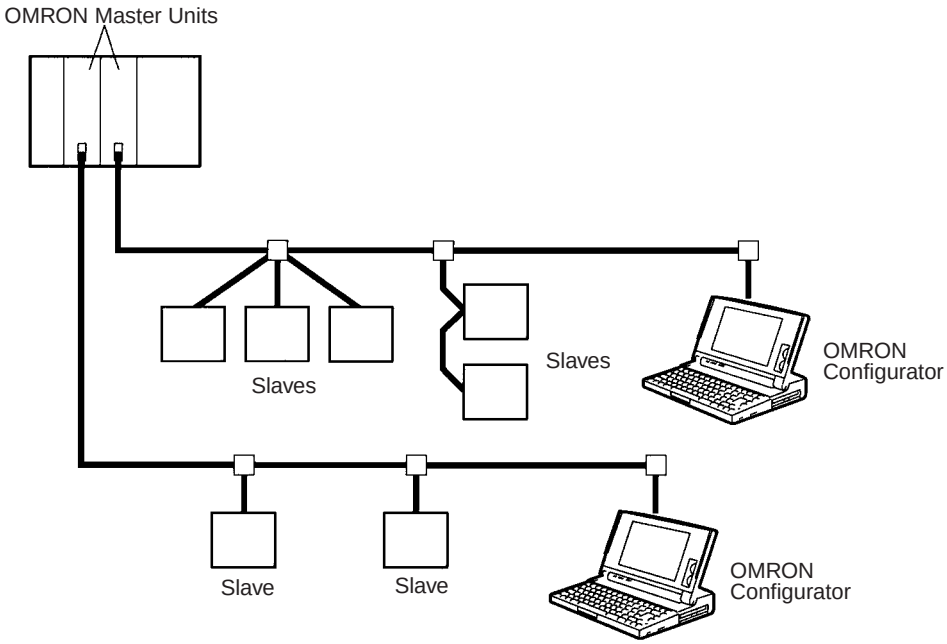

Free Remote I/O Allocation

A Configurator (sold separately) can be used to enable flexible allocation of I/O, i.e., in any area and in any order. This allows I/O allocations that suit the application to simplify programming and enable effective usage of PLC memory areas.

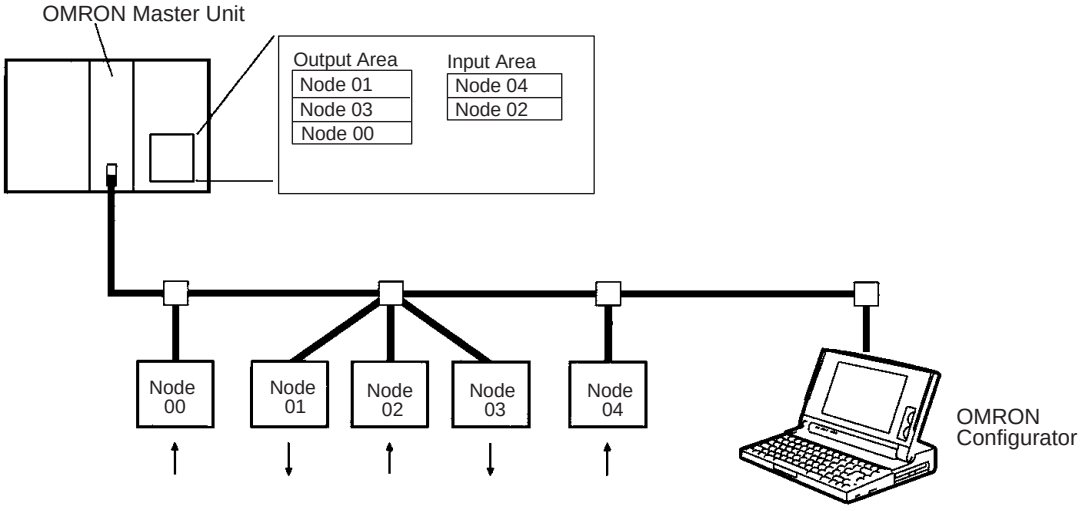

Handle Slaves with Different Response Speeds

A Configurator (sold separately) can be used to set the communications cycle time, enabling usage of Slaves with slow response times.

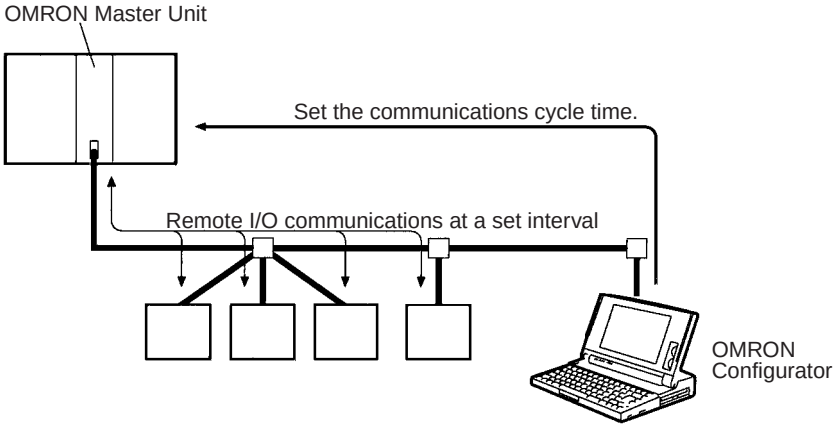

Easily Expand or Change Lines with Various Connection Methods

Use a multi-drop trunk line, T-branch multi-drop lines, or daisy-chain drop lines. All three connection methods can be combined to flexibly construct a network that meets the needs of the application.

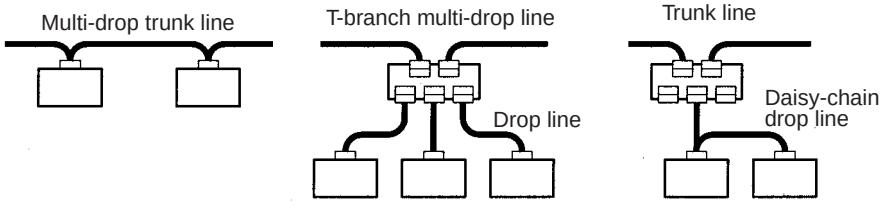

Overall System Configuration

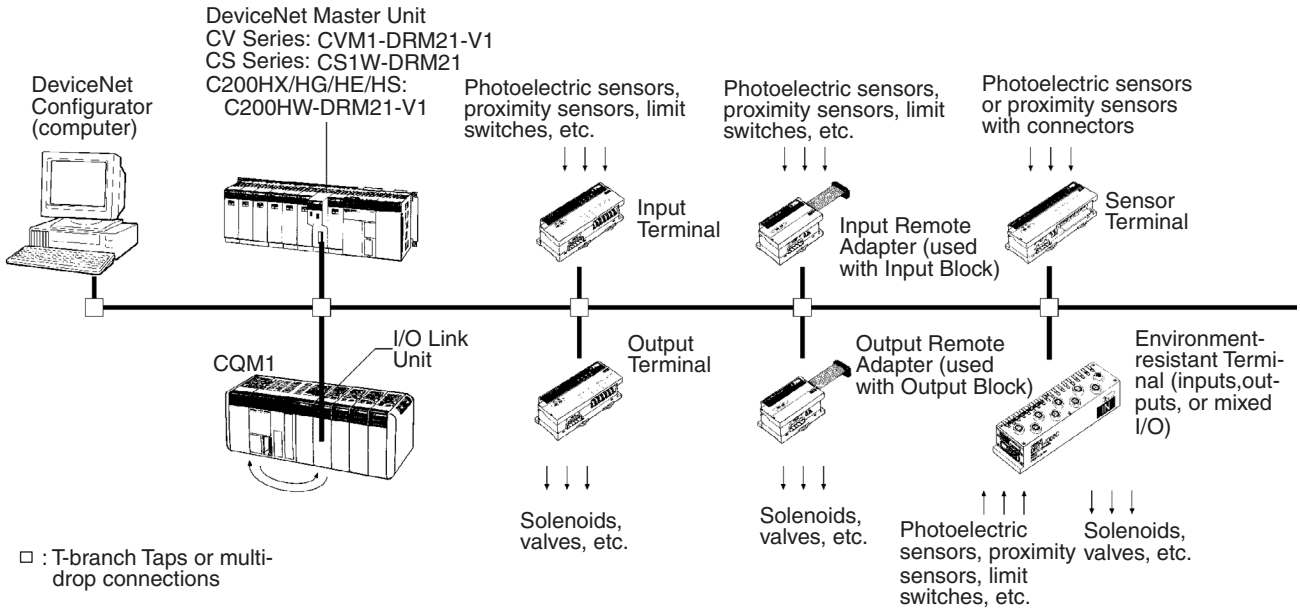

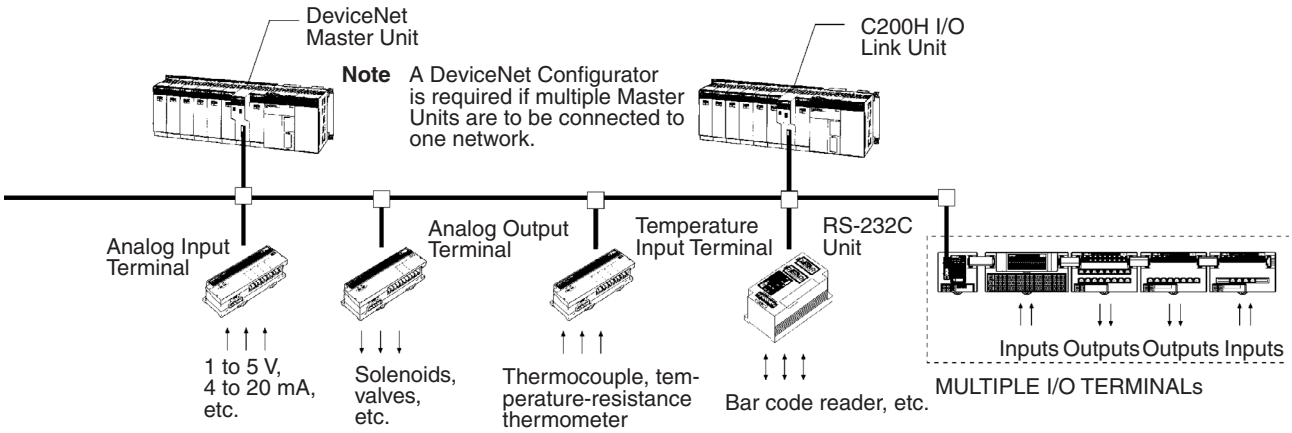

Master Features

Master Units

Support remote I/O communications between OMRON PLCs (CS Series, CV Series or C200HX/HG/HE/HS) and Slaves.

Support message communications between OMRON PLCs, or between an OMRON PLC and Slaves and Masters from other companies.

VME Master Boards

Support remote I/O communications between a VME System and Slaves.

Open Network Controllers

Support easy connection to an information system via Ethernet.

Configurator Features

- Enables free (user-set) allocations to remote I/O.
- Enables multiple Master Units on a single PLC.
- Enables multiple Master Units in a single network.
- The Net-X Server can be used to easily monitor, change, or log I/O data on the DeviceNet.

Slave Features

I/O Terminals

- Provide general-purpose inputs, outputs, or both inputs and outputs via 2-tier terminal blocks (M3). Available in 8-point and 16-point models with transistor inputs or outputs or in a 16-point model with 8 inputs and 8 outputs.
- Provide general-purpose inputs, outputs, or both inputs and outputs via 3-tier terminal blocks (M3). Available in 16-point models with transistor inputs or outputs or in a 16-point model with 8 inputs and 8 outputs.
- Provide general-purpose inputs, outputs, or both inputs and outputs via a MIL connector. Available in 32-point models with transistor inputs or outputs or in a 32-point model with 8 inputs and 8 outputs.

■ Environment-resistive Slaves

Environment-resistant Terminals

- Improved I/O Terminals that conform to IP66 for spatter-, water-, and oil-resistance. Sensors or valves with round water-proof connectors can be easily connected with no tools.
- Available in 8-point or 16-point models with transistor inputs or outputs, and 16-point models with transistor I/O (8 inputs and outputs).
- DRT1-□□□□C(-1): IP66

Water-proof Terminals

- Improved I/O Terminals that conform to IP67 for water- and oil-resistance. Sensors or valves with round water-proof connectors can be easily connected with no tools.
- Available in 4-point or 8-point models with transistor inputs or outputs.
- DRT1-□□□□CL(-1): IP67

B7AC Interface Unit

- Input Interface Unit that conforms to IP66 for spatter-, water-, and oil-resistance.
- Provides three FA connector ports for the B7A for 10 input points on each of 3 ports.

Remote Adapters

- Used in combination with G70D and other I/O Blocks to handle relay outputs, power MOS FET Relay outputs, etc.
- Available in 16-point models with transistor inputs or outputs.

CQM1 I/O Link Units

- More than one I/O Link Unit can be mounted to a CQM1 PLC.
- Link 16 inputs and 16 outputs between the PLC and the Master Unit.

Sensor Terminals

- Accept inputs from photoelectric and proximity sensors with connectors.
- Available in 16-point input and 8-point input/8-point output models.
- Output signals can be used for sensor teaching and external diagnosis.

Analog Input Terminals

- Convert analog inputs to binary.
- Switchable between 2 and 4 input points using the DIP switch.
- Handle inputs of 0 to 5 V, 1 to 5 V, 0 to 10 V, –10 to 10 V, 0 to 20 mA, or 4 to 20 mA.

Analog Output Terminals

- Convert binary data to analog outputs.
- Provides outputs of 1 to 5 V, 0 to 10 V, –10 to 10 V, 0 to 20 mA, or 4 to 20 mA.
- Available in models with a resolution of either 1/6,000 or 1/30,000.

Temperature Input Terminals

- Temperature data is input as binary data for 4 inputs.
- Thermocouple and temperature-resistance thermometer inputs are available.

■ Special I/O Slaves

C200H I/O Link Units

- Special I/O Slaves that mount to C200HX/HG/HE PLCs and read/write data from the Master Unit to the specified words in the CPU Unit.
- Read and write areas specified for up to 512 bits each (32 words each).
- Any memory area words can be read or written using DeviceNet explicit messages.

RS-232C Units

- Special I/O Slaves that provide two RS-232C ports and control I/O from the Master Units.

MULTIPLE I/O TERMINALs

- Multiple I/O Units can be combined under a Communications Unit and treated as a single Slave.
- Special I/O Units, such as Analog I/O Units, and High-speed Counter Units are also available.

1-1-2 Slaves

DeviceNet Slaves are classified as follows:

- General-purpose Slaves
  Slaves with I/O functions that use a normal connector to connect the communications cable.
- Environment-resistive Slaves
  Slaves with I/O functions that use a round, water-proof connector to connect the communications cable.
- Special I/O Slaves
  Slaves with functions other than I/O functions (such as message communications) that use a normal connector to connect the communications cable.

Type	Cable	Name	Appearance	I/O points	Model	Features
General purpose	Normal square connector	Transistor Remote I/O Terminals	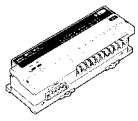	8 input points, NPN	DRT1-ID08	---
				8 input points, PNP	DRT1-ID08-1	
				16 input points, NPN	DRT1-ID16	
				16 input points, PNP	DRT1-ID16-1	
				8 output points, NPN	DRT1-OD08	
				8 output points, PNP	DRT1-OD08-1	
				16 output points, NPN	DRT1-OD16	
				16 output points, PNP	DRT1-OD16-1	
				8 input/8 output points, NPN	DRT1-MD16	
		Transistor Remote I/O Terminals with 3-tier I/O Terminal Blocks	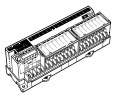	16 input points, NPN	DRT1-ID16T	Easy wiring (no need to double-wire terminals and wiring locations are easy to understand) Separate power supply not needed for the DRT1-□D16TA (same power supply used as communications power supply).
				16 input points, PNP	DRT1-ID16T-1	
				16 input points, NPN	DRT1-ID16TA	
				16 input points, PNP	DRT1-ID16TA-1	
				16 output points, NPN	DRT1-OD16T	
				16 output points, PNP	DRT1-OD16T-1	
				16 output points, NPN	DRT1-OD16TA	
				16 output points, PNP	DRT1-OD16TA-1	
				8 input/8 output points, NPN	DRT1-MD16T	
				8 input/8 output points, PNP	DRT1-MD16T-1	
				8 input/8 output points, NPN	DRT1-MD16TA	
				8 input/8 output points, PNP	DRT1-MD16TA-1	

Type	Cable	Name	Appearance	I/O points	Model	Features
General purpose	Normal square connectors	Transistor Remote I/O Terminals with I/O Connectors	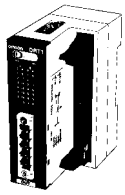	32 input points, NPN	DRT1-ID32ML	Compact: 35 x 60 x 80 mm (WxDxH) Connection to I/O Blocks possible through MIL cables. Separate power supply not needed (same power supply used as communications power supply).
				32 input points, PNP	DRT1-ID32ML-1	
				32 output points, NPN	DRT1-OD32ML	
				32 output points, PNP	DRT1-OD32ML-1	
				16 input/16 output points, NPN	DRT1-MD32ML	
				16 input/16 output points, PNP	DRT1-MD32ML-1	
		Remote Adapters	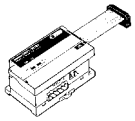	16 input points, NPN	DRT1-ID16X	Compact: 85 x 50 x 40 mm (WxDxH) Connects to G70D I/O Block for output via relays or power MOS FET relays.
				16 input points, PNP	DRT1-ID16X-1	
				16 output points, NPN	DRT1-OD16X	
				16 output points, PNP	DRT1-OD16X-1	
		Sensor Terminals	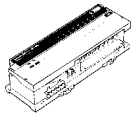	16 input points, NPN	DRT1-HD16S	Connected to photoelectric and proximity sensors with connectors
				8 input/8 output points, NPN	DRT1-ND16S	
		Temperature Input Terminals	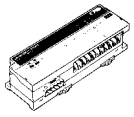	4 thermocouple input points	DRT1-TS04T	Thermocouple Temperature-resistant input
				4 temperature-resistant input points	DRT1-TS04P	
		Analog Input Terminals	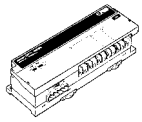	4 analog input points (4 words) or 2 input points (2 words) (voltage or current)	DRT1-AD04	Applicable range: 1 to 5 V, 0 to 5 V, 0 to 10 V, –10 to +10 V, 0 to 20 mA, or 4 to 20 mA input (switchable) Resolution: 1/6,000
				4 analog input points (4 words) (voltage or current	DRT1-AD04H	Applicable range: 1 to 5 V, 0 to 5 V, 0 to 10 V, 0 to 20 mA, or 4 to 20 mA input (switchable) Resolution: 1/30,000
		Analog Output Terminals	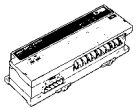	2 analog output points (2 words)	DRT1-DA02	Applicable range: 1 to 5 V, 0 to 10 V, –10 to +10 V, 0 to 20 mA, or 4 to 20 mA output (switchable) Resolution: 1/6,000
		CQM1 I/O Link Units	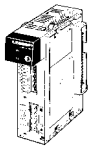	16 internal input/ 16 internal output points (between CQM1 and Master Unit)	CQM1-DRT21	Pier-to-pier remote I/O PLC communications

Type	Cable	Name	Appearance	I/O points	Model	Features
Environment-resistive Terminals	Round communications connectors	Waterproof Terminals	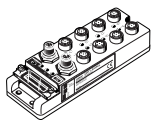	4 input points, NPN	DRT1-ID04CL	Better resistance to environment with waterproof, drop-proof construction (IP67). Connects without tools to sensors, valves, and other devices with XS2-series connectors.
				4 input points, PNP	DRT1-ID04CL-1	
				8 input points, NPN	DRT1-ID08CL	
				8 input points, PNP	DRT1-ID08CL-1	
				4 output points, NPN	DRT1-OD04CL	
				4 output points, PNP	DRT1-OD04CL-1	
				8 output points, NPN	DRT1-OD08CL	
				8 output points, PNP	DRT1-OD08CL-1	
		Environment-resistive Transistor Terminals		8 input points, NPN	DRT1-ID08C	Better resistance to environment with spatter-proof, waterproof, drop-proof construction (IP66). Connects without tools to sensors, valves, and other devices with XS2-series connectors.
				8 output points, NPN	DRT1-OD08C	
				16 input points, NPN	DRT1-HD16C	
				16 input points, PNP	DRT1-HD16C-1	
				16 output points, NPN	DRT1-WD16C	
				16 output points, PNP	DRT1-WD16C-1	
				8 input/8 output points, NPN	DRT1-MD16C	
				8 input/8 output points, PNP	DRT1-MD16C-1	
		B7AC Interface Unit		10 inputs x 3 ports	DRT1-B7AC	Each Unit connects to three branches. Connects without tools to sensors, valves, and other devices with XS2-series connectors. Better resistance to environment with spatter-proof, waterproof, drop-proof construction (IP66).
Special I/O Slaves	Normal square connectors	C200H I/O Link Units		512 input points max. (32 words) 512 output points max. (32 words)	C200HW-DRT21	Pier-to-pier remote I/O PLC communications Max. I/O area: 512 inputs and 512 outputs. User allocations of I/O area.
		RS-232C Units		16 input points (1 word) (status area)	DRT1-232C2	Two RS-232C ports Explicit messages used for data transfers (151 bytes max.) Explicit messages used for settings and control. RS-232C port status reflected in inputs.

1-1-3 Slave Mounting and Connection Methods

Type	Cable	Name	Model	Mounting	I/O connections	Combined devices	Internal power supply	I/O power supply
General purpose	Normal square connectors	Transistor Remote I/O Terminals	DRT1-ID08	DIN Track or screws	M3 terminal block, 2 tiers	Connected to terminal block	M3 terminal block	M3 terminal block
			DRT1-ID08-1					
			DRT1-ID16					
			DRT1-ID16-1					
			DRT1-OD08					
			DRT1-OD08-1					
			DRT1-OD16					
			DRT1-OD16-1					
			DRT1-MD16					
		Transistor Remote I/O Terminals with 3-tier I/O Terminal Blocks	DRT1-ID16T	DIN Track or screws	M3 terminal block, 3 tiers	Connected to terminal block	M3 terminal block	M3 terminal block
			DRT1-ID16T-1					
			DRT1-OD16T					
			DRT1-OD16T-1					
			DRT1-MD16T					
			DRT1-MD16T-1					
			DRT1-ID16TA				Same as communications power supply	
			DRT1-ID16TA-1					
			DRT1-OD16TA					
			DRT1-OD16TA-1					
			DRT1-MD16TA					
			DRT1-MD16TA-1					
		Transistor Remote I/O Terminals with I/O Connectors	DRT1-ID32ML	DIN Track or directly to wall with mounting bracket	MIL connector	Cable with MIL connector and I/O Block	Same as communications power supply	MIL connector (for both inputs and outputs)
			DRT1-ID32ML-1					
			DRT1-OD32ML					
			DRT1-OD32ML-1					
			DRT1-MD32ML					
			DRT1-MD32ML-1					
		Remote Adapters	DRT1-ID16X	DIN Track or screws	Flat cable connector, MIL socket	G70D I/O Block	M3 terminal block	Flat cable connector with MIL socket (for both inputs and outputs)
			DRT1-ID16X-1					
			DRT1-OD16X					
			DRT1-OD16X-1					
		Sensor Terminals	DRT1-HD16S	DIN Track or screws	I/O connector	Sensor or external devices with connector	M3 terminal block	I/O connectors (for both inputs and outputs)
			DRT1-ND16S					
		Temperature Input Terminals	DRT1-TS04T	DIN Track or screws	M3 terminal block	Thermometer	M3 terminal block	None
			DRT1-TS04P			Temperature resistance input device		
		Analog Input Terminals	DRT1-AD04	DIN Track or screws	M3 terminal block	0 to 5 V, 1 to 5 V, 0 to 10 V, –10 to 10 V, 0 to 20 mA, 4 to 20 mA	M3 terminal block	None
			DRT1-AD04H					

Type	Cable	Name	Model	Mounting	I/O connections	Combined devices	Internal power supply	I/O power supply
General purpose	Normal square connectors	Analog Output Terminals	DRT1-DA02	DIN Track or screws	M3 terminal block	1 to 5 V, 0 to 10 V, –10 to 10 V, 0 to 20 mA, 4 to 20 mA	M3 terminal block	None
		CQM1 I/O Link Units	CQM1-DRT21	Directly to PLC	None	PLC-to-PLC link	Supplied from PLC	None
Environment-resistive Terminals	Round communications connectors	Waterproof Terminals	DRT1-ID04CL	Screws	Round, waterproof connector (XS2 compatible)	Cable with XS2 connector on one end and cables with XS2 connector on both ends with sensor with direct connector or relay sensor connector and sensor with pull-out connector	Same as communications power supply	Cable with XS2 connector
			DRT1-ID04CL-1					
			DRT1-ID08CL					
			DRT1-ID08CL-1					
			DRT1-OD04CL					
			DRT1-OD04CL-1					
			DRT1-OD08CL					
			DRT1-OD08CL-1					
		Environment-resistive Transistor Terminals	DRT1-ID08C				Cable with XS2 connector	
			DRT1-OD08C					
			DRT1-HD16C					
			DRT1-HD16C-1					
			DRT1-WD16C					
			DRT1-WD16C-1					
			DRT1-MD16C					
			DRT1-MD16C-1					
		B7AC Interface Unit	DRT1-B7AC	Screws	Round, waterproof connector	B7AC x 3 Units	Cable with XS2 connector	None (communications connections to B7AC via round waterproof connector)
Special I/O Terminals	Normal square connector	C200H I/O Link Units	C200HW-DRT21	To Backplane	None	PLC-to-PLC link	Supplied from PLC	None
		RS-232C Units	DRT1-232C2	DIN Track or screws	Two RS-232 ports	Devices with RS-232C interface (e.g., barcode reader) for two ports	M3 terminal block	None

SECTION 2
Example System Setup

This section provides information on hardware aspects of Masters and Slaves connected to a DeviceNet Network to ensure the proper operation of the system. Included are system configuration examples, basic procedures for wiring, mounting and setting Master and Slave Units, connecting cables and power supplies, creating I/O tables, and creating and registering scan lists.

2-1 Basic Procedures and Configuration Examples 14
2-1-1 Basic Procedures. 14
2-1-2 System Configuration Example 15
2-2 Preparations. 15
2-3 Setting and Wiring Hardware 16
2-3-1 Mounting and Setting the Master Unit 16
2-3-2 Mounting and Setting Slaves 17
2-3-3 Mounting Connecting Devices 18
2-3-4 Connecting Cables 19
2-4 Starting Communications 20
2-4-1 Creating I/O Tables for the Master Unit 20
2-4-2 Starting the System. 20
2-4-3 Creating and Registering Scan Lists. 21
2-5 Checking Operations. 24
2-5-1 Indicator Status 24
2-5-2 Reading and Writing Data 24

2-1 Basic Procedures and Configuration Examples

The examples shown here provide the basic operating procedures for DeviceNet.

2-1-1 Basic Procedures

Use the following procedures to operate the DeviceNet Slave Units. For details on settings and connections, refer to the operation manual for the Master Unit. For further details on Slave Units, refer to *SECTION 4 General-purpose Slaves* to *SECTION 6 Special I/O Slave Units Specifications*.

Preparing the Units

1,2,3...

1. Select the appropriate Units. Refer to *page 15*.
2. Determine the appropriate wiring method. Refer to *page 15*.
3. Determine the appropriate method for supplying communications power. Refer to *page 15*.

Setting and Wiring Hardware

1,2,3...

1. Separate and lay the cables.
2. Mount the Master Unit and specify the correct settings. Refer to *page 16*.
3. Mount the Slave Units and specify the correct settings. Refer to *page 17*.
4. Mount other devices to be connected to the Network. Refer to *page 15*.
5. Connect the cables. Refer to *page 15*.
6. Wire the I/O cables. Refer to *page 15*.

Starting Communications

1,2,3...

1. Create the I/O tables. Refer to *page 20*.
2. Start up the system. Refer to *page 20*.
3. Create and register the scan list. Refer to *page 21*.

Checking Operations

1,2,3...

1. Check the status of the indicators on the Unit. Refer to *page 24*.
2. Check that data is reading and writing properly. Refer to *page 24*.

Note The examples provided in this section show the minimum settings to operate the system. If details on other settings for actual operation are required, refer the operation manual for the Master Unit. For further details on Slave Units, refer to *SECTION 4 General-purpose Slaves* to *SECTION 6 Special I/O Slave Units Specifications*.

2-1-2 System Configuration Example

The following diagram shows the operating procedure using a system configuration example. The system configuration shown here uses Thin Cables.

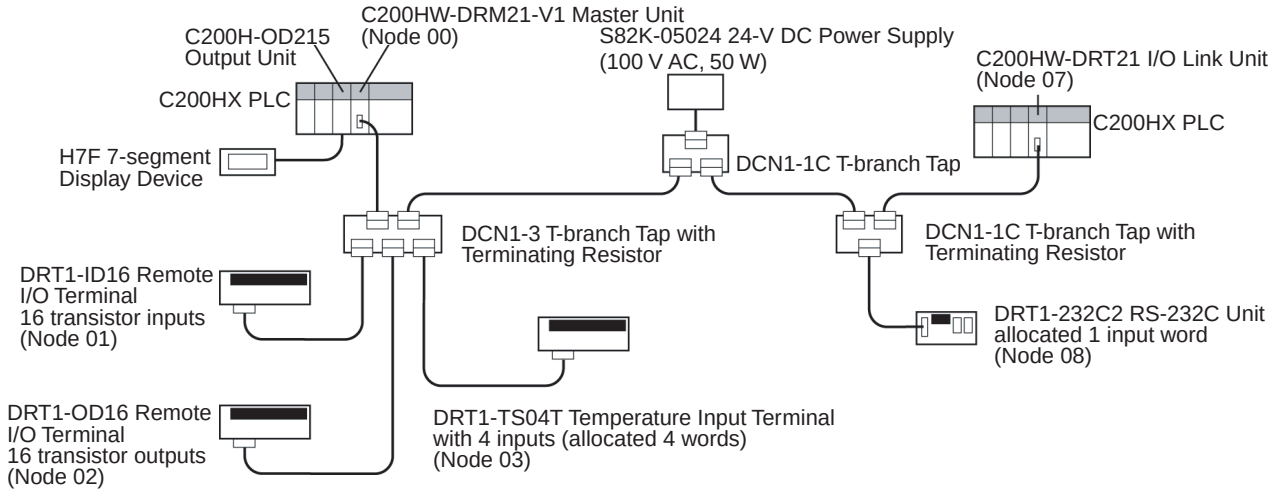

Power is supplied to each node in the above diagram using the following devices.

Internal power: S82K-05024 (100 V AC, 50 W)

I/O power: S82K-05024 (100 V AC, 50 W)

2-2 Preparations

Selecting Units

Select the following Units as shown in *2-1-2 System Configuration Example*.

Master Unit:	C200HW-DRM21-V1
Slave Units:	DRT1-ID16
	DRT1-OD16
	DRT1-TS04T
	C200HW-DRT21
	DRT1-232C2

There is a complete line of OMRON Master Units and Slave Units available that are compatible with DeviceNet. Select Units that suit the needs of the system. For further details on types of Units, refer to *1-1-2 Slaves*.

Wiring

Either Thick Cables or Thin Cables can be used to wire a DeviceNet Network.

Flexible branching of cables is possible by using either T-branch Taps or multi-drop connections. Restrictions on the maximum network length and total branch line length depends on the baud rate and type of cable used. For details, refer to the *DeviceNet Operation Manual (W267)*.

In *2-1-2 System Configuration Example*, Thin Cables are used with T-branch Taps for connecting Slave Units to the trunk line.

Communications Power Supply

Each node (Master or Slave) must be supplied with a 24-V DC power supply for proper DeviceNet communications. The communications power, however, can be supplied by communications cables and does not require separate wiring.

For systems that have a short maximum network length, power can be supplied to all nodes by using one communications power supply. Various conditions, constraints, and measures affect how the communications power is

supplied. In the examples shown here, the power is supplied from one communications power supply, and communications cables are connected using T-branch Taps.

Refer to the *DeviceNet Operation Manual (W267)* for details on methods of supplying communications power.

Note Use the OMRON Connectors shown below when using Thick Cables and multi-drop connections for wiring.

XW4B-05C4-T-D
(Without set screws)

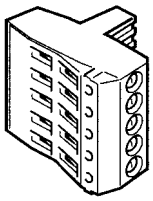

XW4B-05C4-TF-D
(With set screws)

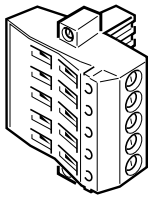

2-3 Setting and Wiring Hardware

Use the following procedures to mount, set, and wire the hardware.

2-3-1 Mounting and Setting the Master Unit

Settings

The components, functions, and switch settings for the C200HW-DRM21-V1 Master Unit mounted to a C200HX PLC are shown as an example in the following diagram. For information on switch settings and other Master Units, refer to the operation manual for the Master Unit.

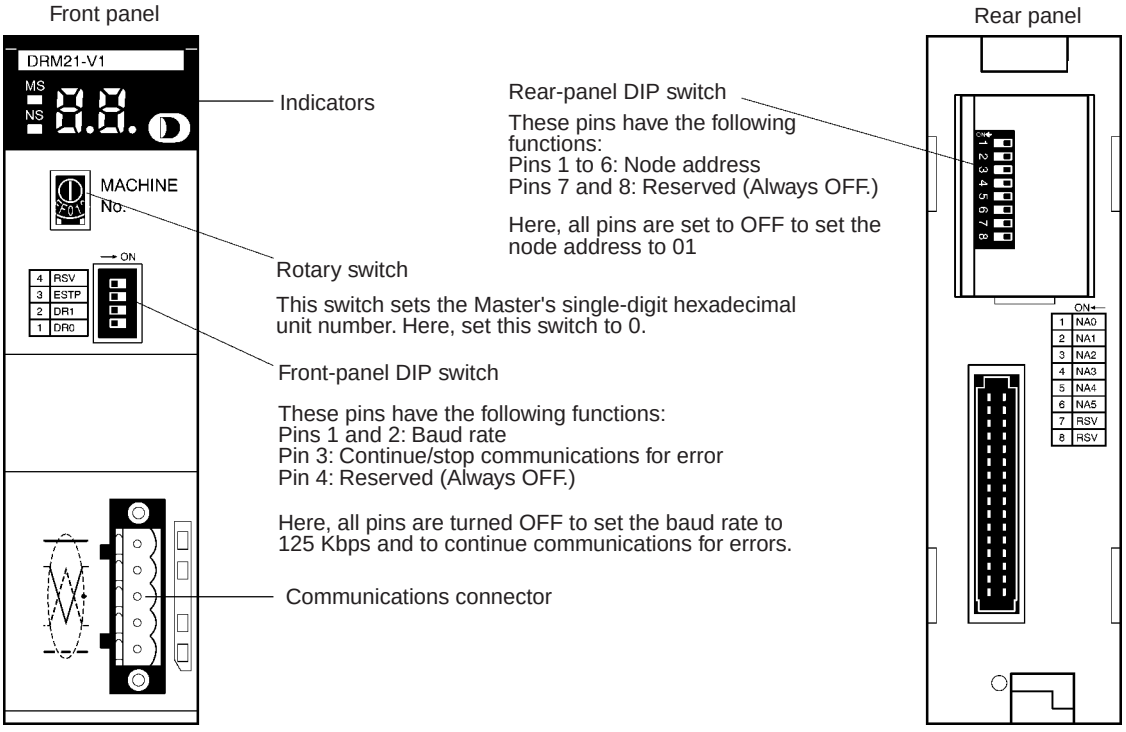

Mounting

The Master Unit is mounted to the Backplane of the PLC in the same way as other Units are normally mounted. For details on mounting Master Units to PLCs, and mounting control panels to PLCs, refer to the applicable CPU Unit Operation Manual.

2-3-2 Mounting and Setting Slaves

Settings

The following example shows Slave settings. For details on how to set Slaves, refer to *SECTION 4 General-purpose Slaves* to *SECTION 6 Special I/O Slave Units Specifications*.

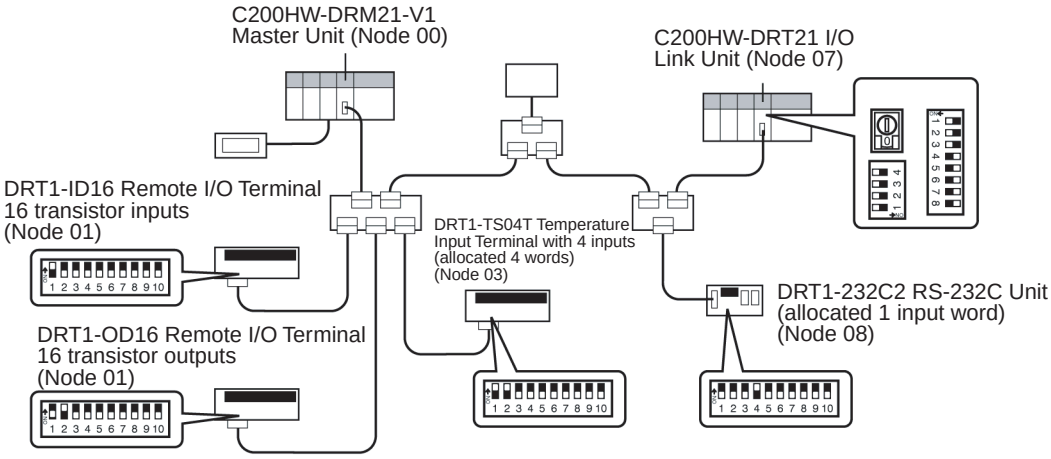

- DRT-ID16 Remote I/O Terminals (Transistor Inputs)

  Node Address: 01

  Baud Rate: 125 kbps
- DRT-OD16 Remote I/O Terminals (Transistor Outputs)

  Node Address: 02

  Baud Rate: 125 kbps

  Hold/Clear Outputs for Communications Error: Clear
- DRT1-TS04T Temperature Input Terminals

  Node Address: 03

  Baud Rate: 125 kbps

  Temperature Scale: °C

  Display Mode for 2 Digits Below Decimal Point: Normal mode
- C200HW-DRT21 I/O Link Units

  Node Address: 07

  Unit Number: 0

  Baud Rate: 125 kbps

  Write Area Handling for Communications Error: Clear
- DRT1-232C2 RS-232C Units

  Node Address: 08

  Baud Rate: 125 kbps

Mounting

C200H I/O Link Units

C200H I/O Link Units are mounted to C200HX Backplanes in the same way as Units are normally mounted to PLCs. For details on mounting I/O Link Units to PLCs, and mounting control panels to PLCs, refer to the CPU Unit's Operation Manual.

A maximum of 16 C200H I/O Link Units can be mounted to the CPU Rack and Expansion I/O Racks for a C200HX/HG/HE PLC.

Remote I/O Terminals and Temperature Input Terminals

Remote I/O Terminals and Temperature Input Terminals are mounted using either of the following two methods.

- Screw Mounting
  While referring to the dimensions for each Slave provided in *SECTION 4 General-purpose Slaves* to *SECTION 6 Special I/O Slave Units Specifications*, open mounting holes in the control panel and secure the Slave Units to the control panel using M4 screws.
  The appropriate tightening torque is 0.6 to 0.98 N·m.
- DIN Track Mounting
  Secure the bottom of the Slave Unit to a 35-mm DIN track, or secure the Slave Unit to the track between two End Plates.

Mounting Examples

The following diagram shows all Units except the PLC node mounted to DIN tracks.

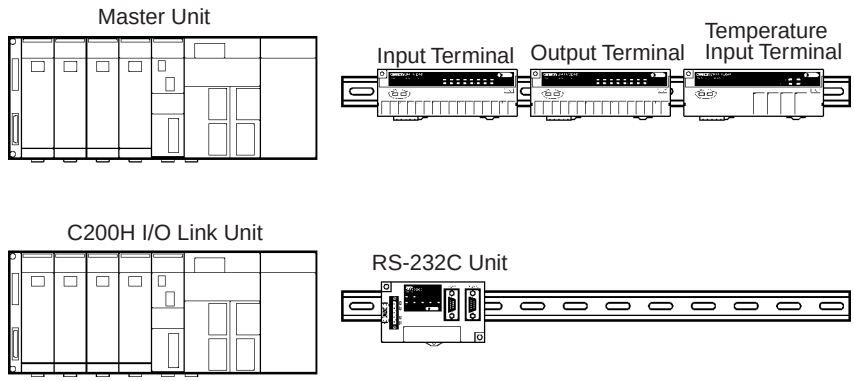

2-3-3 Mounting Connecting Devices

Connecting devices that require being mounted are as follows:

- T-branch Taps: Secure to the control panel with screws, or mounted to a DIN track.
- Terminal-block Terminating Resistors: Secure to the control panel with screws.

Open mounting holes in the control panel and secure the device to the control panel with screws. Tighten the M4 screws to a tightening torque of 0.6 to 1.18 N·m. The method of mounting devices to DIN track is the same as for Slave Units. Refer to the *DeviceNet Operation Manual (W267)* for details.

2-3-4 Connecting Cables

Connecting Communications Cables

Connect the Master Unit and T-branch Taps, T-branch Taps and T-branch Taps, and T-branch Taps and Slaves with Thin DeviceNet Communications Cables.

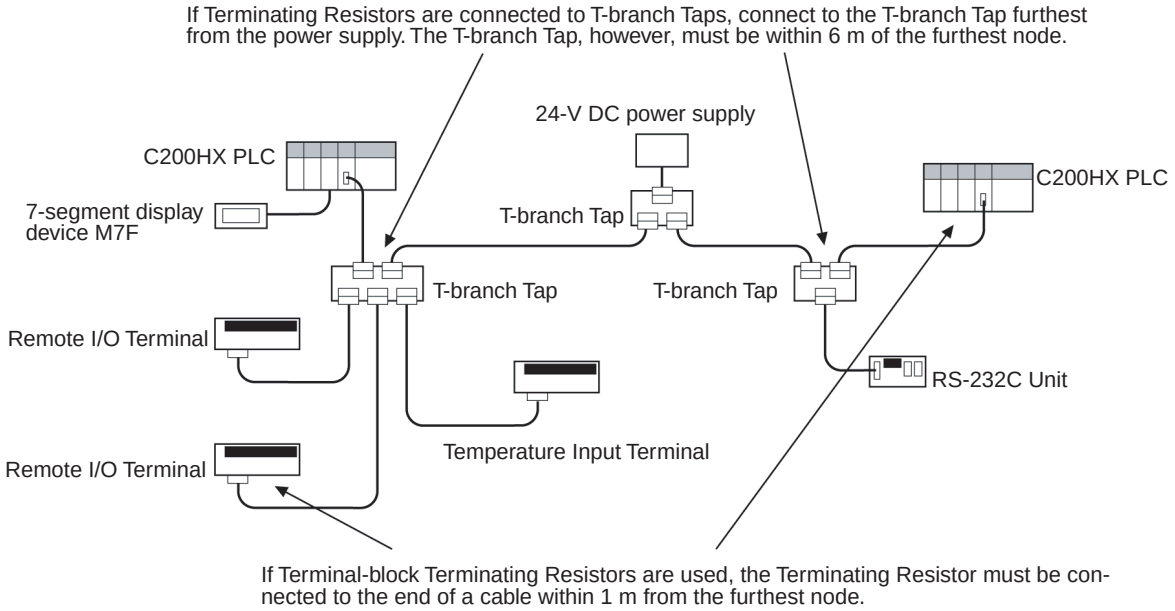

Use the following procedure to connect the cables. Refer to *4-2 Connecting Communications Cables to General-purpose Slaves* for details.

1,2,3...

1. Prepare the communications cables and attach the connectors to the cables.
2. Connect the communications cable connectors to the node connectors on the Master Unit, T-branch Taps, and Slaves.

Wiring the Internal Power Supply

Most nodes on the network require an internal power supply in addition to the communications power supply to operate the device. Supply internal power to all nodes except for the Master Unit and C200H I/O Link Unit. Connect M3 crimp terminals to the power lines and then connect them to the terminal block.

Wiring the I/O Power Supply

If required, an I/O power supply for I/O devices is connected to the Remote I/O Terminals. Connect M3 crimp terminals to the power lines and then connect them to the terminal block.

Wiring I/O

Connect M3 crimp terminals to the signal lines of Remote I/O Terminals and Temperature Input Terminals and then connect them to the terminal block.

2-4 Starting Communications

After setting and wiring the hardware, turn ON the communications power supply, the internal power supply of each node, and the I/O power supply, and then start communications using the following procedure.

2-4-1 Creating I/O Tables for the Master Unit

I/O tables must be created in the CPU Unit to distinguish between the different Slaves mounted to the PLC.

Turn ON the PLC to which the Master Unit and C200H I/O Link Unit are mounted, connect the Peripheral Devices to the PLC, and create the I/O tables. Once the I/O tables have been created, turn OFF the power to the PLC. The following example shows the procedure for creating I/O tables using a Programming Console. For details on creating I/O tables, refer to the Operation Manual for the Peripheral Device being used.

1,2,3...

1. Turn ON power to Master Unit.
2. Switch the operating mode switch to PROGRAM mode.
3. Input the following key sequence.

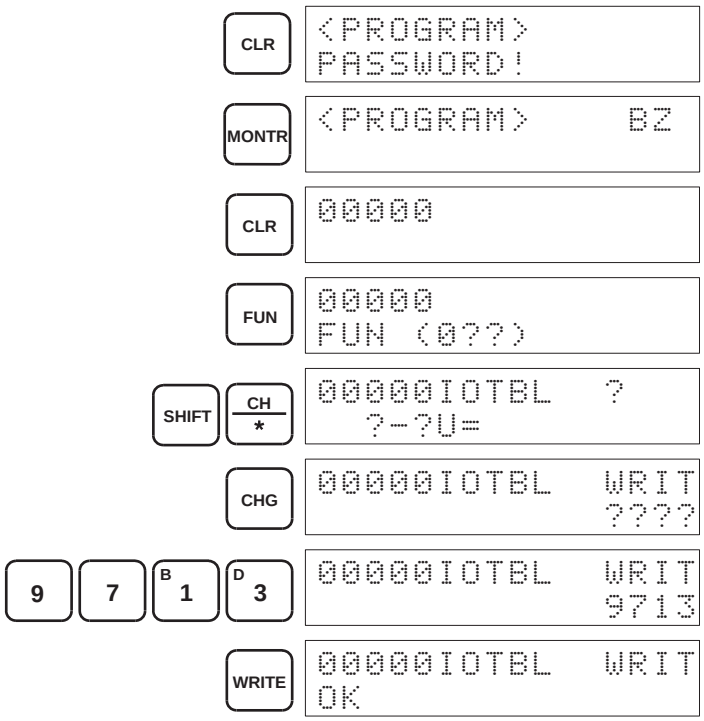

Precautions

- Do not turn ON multiple Master Units in a DeviceNet Network until scan lists for all Masters have been registered. Finish creating I/O tables for one Master Unit before creating tables for another Master Unit.
- Do not turn ON the power supply to other nodes or the communications power supply when creating I/O tables.

2-4-2 Starting the System

Turn ON the communications power supply and the power to other nodes in the following order.

1,2,3...

1. Turn ON the communications power supply.

2. Turn ON the power to each Slave.
3. Turn ON the power to the Master Unit.

The power supplies listed above can all be turned ON simultaneously. The external I/O power supply can be turned ON at any time.

2-4-3 Creating and Registering Scan Lists

Scan lists are lists that register the information that is transferred between Master Units and Slaves. The Master Unit compares the scan list with the status of the Slave currently being communicated with, so communications with the Slave are always being checked.

For details on scan lists and remote I/O communications, refer to the operation manual for the Master Unit.

Note When the scan list is disabled, communications are possible with all Slaves on the DeviceNet Network with fixed allocations. Without scan lists, however, the Master Unit cannot check if there is an error in a Slave. For normal operations, always enable the scan lists.

Precautions

- User I/O Allocations
  The user can allocated desired words for Slave I/O in the DeviceNet I/O Areas (Input Area, Output Area) in the Master Unit. When user allocations are used, scan lists must be created with a DeviceNet Configurator and registered in the Master Unit. The scan list is enabled as soon as it is registered, and I/O communications start according to the scan list. For details, refer to the *DeviceNet Operation Manual (W267)* and the *DeviceNet Configurator Operation Manual (W328)*.
- Fixed I/O Allocations
  Slave I/O is allocated in the DeviceNet I/O area (Input Area, Output Area) in the Master Unit in the same order as the Slave node addresses. When fixed allocations are used, the scan lists are automatically created and registered using the software switches. The scan list is enabled as soon as it is registered, and I/O communications start according to the scan list. The registered scan lists can be cleared using the software switches.

Note If scan lists are not enabled, operation will be performed on the DeviceNet network according to fixed allocations, but the Master will not be able to recognize errors. Always enable the scan lists during normal operation.

Creating and Registering Fixed Allocation Scan Lists

The method of creating and registering scan lists for fixed allocation using Programming Console is explained here. For details on operating the Peripheral Device, refer to the Operation Manual for the Peripheral Device being used with the PLC. For details on creating scan lists, refer to the operation manual for the Master Unit. For fixed allocations, the PLC's Peripheral Device is used to operate the Master Unit's software switches, monitor the Status Areas (Master Status Area 1 and Registered Slave Data Area), and create and register scan lists.

Creating and Registering Scan Lists

Use the following procedure to create, register, and enable the scan lists.

- The following procedure shows how to clear scan lists.

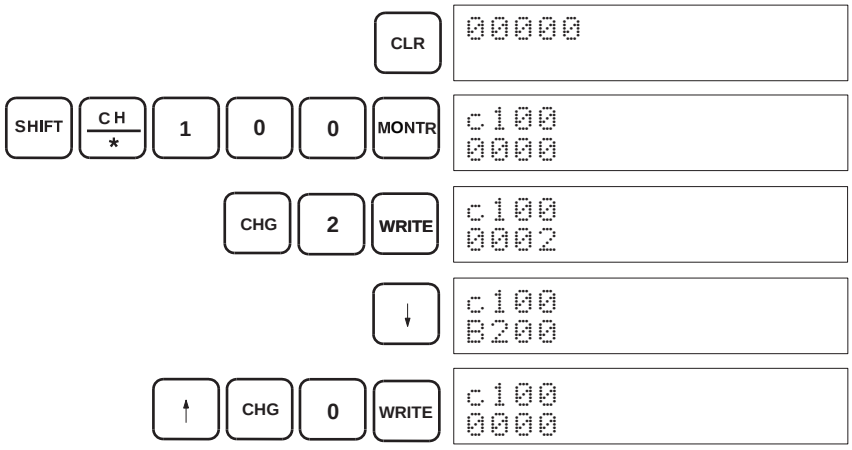

1,2,3...

1. Switch the operating mode switch to PROGRAM mode.
2. Display the initial screen.
3. Monitor IR 100 (software switches).
4. Turn ON bit 01(Scan List Clear Bit).
5. Monitor IR 101 (Master Status Area 1) and check that bit 09 (scan list operation end) turns ON.
6. Turn OFF bit IR 10001.

- The following procedure shows how to check the registered slave data.

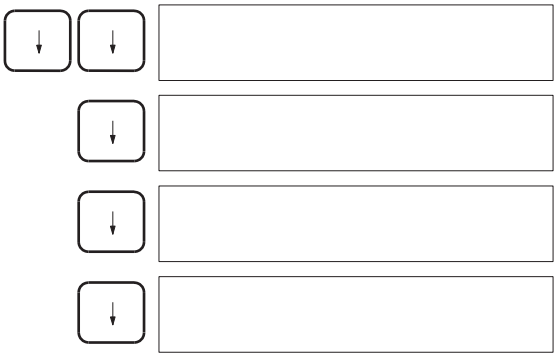

Monitor IR 102 to IR 105 (Registered Slave Data Area), and check that bits 00, 01, 02, 03, 07, and 08 are ON.

The numbers in the following table indicate the node addresses. In the Registered Slave Data Area, the bits corresponding to the nodes that are communicating properly are ON.

	15	14	13	12	11	10	9	8	7	6	5	4	3	2	1	0	Bit
IR 102	15	14	13	12	11	10	9	8	7	6	5	4	3	2	1	0	
IR 103	31	30	29	28	27	26	25	24	23	22	21	20	19	18	17	16	
IR 104	47	46	45	44	43	42	41	40	39	38	37	36	35	34	33	32	
IR 105	63	62	61	60	59	58	57	56	55	54	53	52	51	50	49	48	

- The following procedure shows how to create and register scan lists.

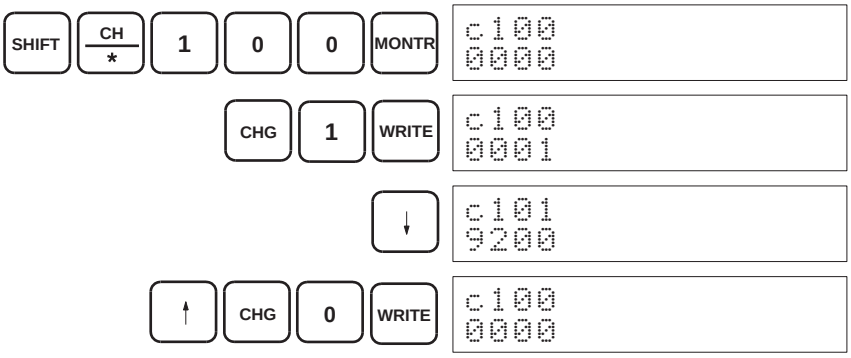

1,2,3...

1. Monitor IR 100 (software switches).
2. Turn ON bit 00 (Scan List Enable Bit).
3. Monitor IR 101 (Master Status Area 1), and check that bit 09 (scan list operation end) turns ON.
4. Turn OFF bit IR 10000. The scan list will be created, registered, and I/O communications will start with the scan list enabled.

Software Switches and Status Area

The software switches and Status Area are allocated in IR words according to the Master Unit's unit number as shown in the following diagram.

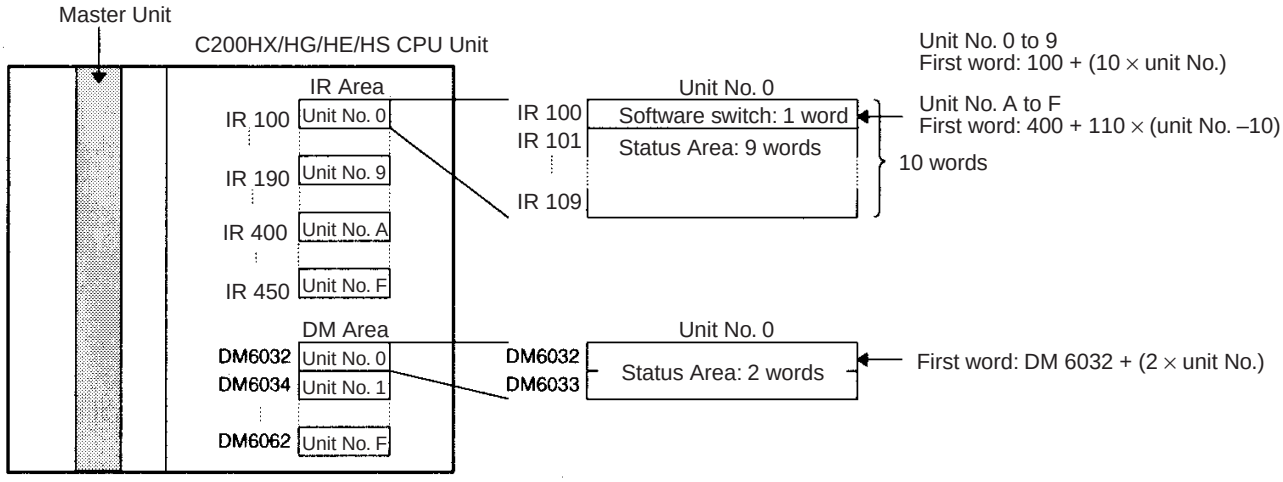

The following diagram shows the Status Area configuration for unit number 0.

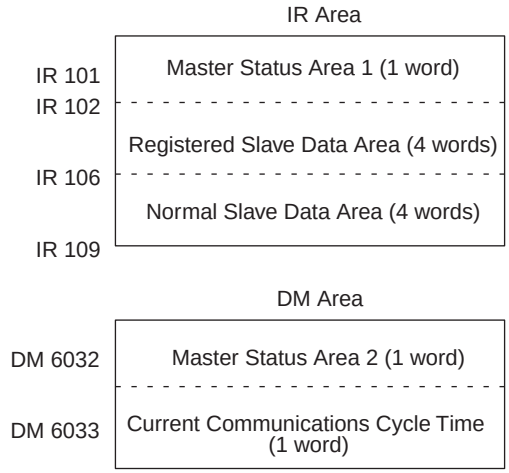

2-5 Checking Operations

Use the procedures provided here to check that I/O communications are operating normally.

2-5-1 Indicator Status

I/O communications are operating normally if the MS and NS indicators for all nodes are lit in green, and the 7-segment indicator on the front panel of the Master Unit is displaying the node address of the Master Unit as shown in the following diagram (when the Master Unit's node address is 00), and the scan list is enabled.

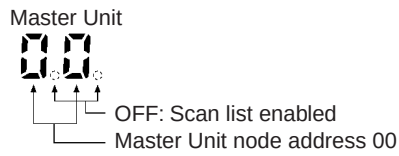

2-5-2 Reading and Writing Data

Connect the Peripheral Device for the PLC to the Master Unit, write the Master Unit's Output Area and are read the Input Area, and check that the data is the same in the Slaves.

Refer to the operation manual for the Master Unit for details on Output Area and Input Area addresses and how to allocate Slave I/O.

I/O between Remote I/O Terminals

Create ladder programs in the PLC of the Master Unit, and check that when the switch on the DRT1-ID16 Input Terminal turns ON, the indicator on the DRT1-OD16 Output Terminal turns ON.

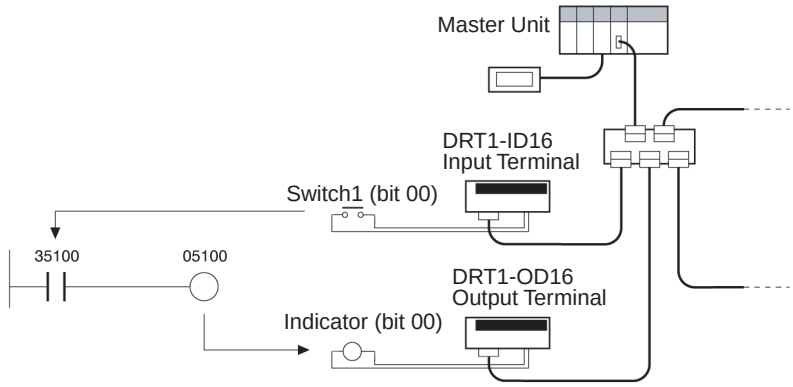

Slave Allocations

In the system configuration examples in this section, Slave I/O is allocated in the Master Unit's IR Area for fixed remote I/O communications as shown in the following diagram.

	Output area		Input Area
IR 50	Not used.	IR 350	Not used.
IR 51	Not used.	IR 351	DRT1-ID16
IR 52	DRT1-OD16	IR 352	Not used.
IR 53	Not used.	IR 353	DRT1-TS04T
IR 54		IR 354	
IR 55		IR 355	
IR 56		IR 356	
IR 57	C200HW-DRT21	IR 357	C200HW-DRT21
IR 58	Not used.	IR 358	DRT1-232C2
IR 59	Not used.	IR 359	Not used.

Displaying Temperature Data with 7-segment Display

Operation can be checked by displaying the temperature data input into the Temperature Input Terminal on the 7-segment display (static, negative logic model) connected to the Output Unit (IR 110) of the Master's PLC.

The temperature data can be converted to BCD data by using the BCD(024) instruction (when the temperature data is negative, it can be converted to positive data using the NEG(160) instruction). For details on using instructions,

refer to the *C200HX, C200HG, C200HE Programmable Controllers Operation Manual (W322)*.

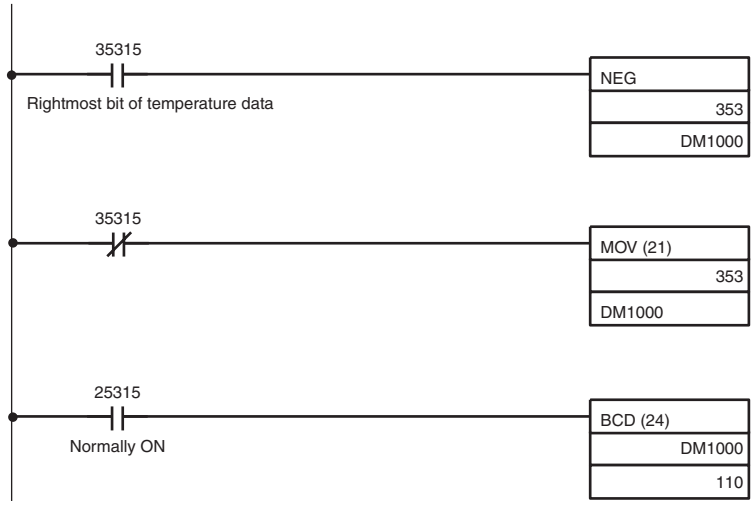

- Use the MVN(022) instruction to reverse data for displays that require positive logic.
- Use the 7SEG(214) instruction in the I/O Unit instructions for dynamic displays.

Checking I/O Links for C200H I/O Link Units

Read/Write Areas in the C200H I/O Link Unit are allocated by default to the words in the PLC that it is mounted to as follows:

Read Area: IR 50 (1 word)
Write Area: IR 350 (1 word)

The C200H I/O Link Unit's Read/Write Areas are normally linked to the Input/Output Areas of the Master (the Input/Output Areas occupied by the C200H I/O Link Unit in the Master Unit) as shown in the following diagram.

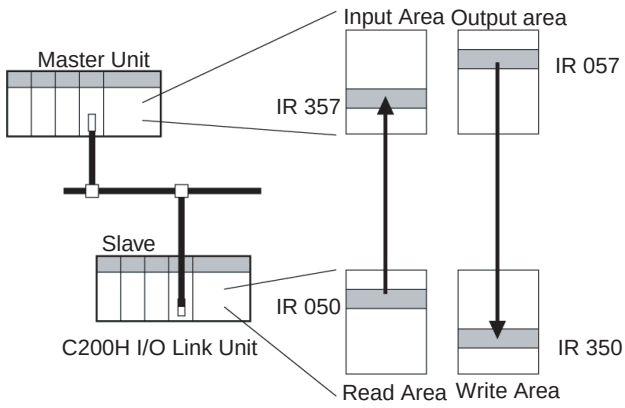

Connect the Peripheral Device to the PLC, monitor the changes in current positions, and check that the links are operating normally.

SECTION 3
Common Slave Specifications

This section provides specifications that are common to all Slaves.

3-1 Common Slave Specifications 28
3-1-1 Communications Specifications 28
3-1-2 MS and NS Indicators. 29

3-1 Common Slave Specifications

3-1-1 Communications Specifications

Item		Specification
Communications protocol		DeviceNet
Supported connections (communications)		Master-Slave: Remote I/O and explicit messages Both conform to DeviceNet specifications
Connection forms		Combination of multi-drop and T-branch connections (for trunk or drop lines)
Baud rate		500 kbps, 250 kbps, or 125 kbps (switchable)
Communications media		Special 5-wire cables (2 signal lines, 2 power lines, 1 shield line)
Communications distances	500 kbps	Network length: 100 m max. (100 m max.) Drop line length: 6 m max. Total drop line length: 39 m max.
	250 kbps	Network length: 250 m max. (100 m max.) Drop line length: 6 m max. Total drop line length: 78 m max.
	125 kbps	Network length: 500 m max. (100 m max.) Drop line length: 6 m max. Total drop line length: 156 m max.
	Parentheses indicate the length when Thin Cables are used.	
Communications power supply		11 to 25 V DC
Max. number of nodes		64 nodes (including Configurator when used)
Max. number of Masters		Without Configurator: 1 With Configurator: 63
Max. number of Slaves		63 Slaves
Communications cycle time		Without Configurator: Input Slaves (16-pt): 16 Output Slaves (16-pt):16 Cycle time at 500 kbps: 9.3 ms With Configurator: Set between 2 and 500 ms Calculated value takes priority if longer.
Max. communications cycle time with multiple Masters		Input Slaves (16-pt): 16 Output Slaves (16-pt):16 Max. cycle time at 500 kbps: 18 ms
Error control checks		CRC error check

3-1-2 MS and NS Indicators

This section describes the meaning of MS and NS indicators for the Slave Units. The MS (Module Status) indicator displays the status of a node on the network. The NS (Network Status) indicator displays the status of the entire network. The MS and NS indicators can be green or red and they can be OFF, flashing, or ON. The following table shows the meaning of these indicator conditions.

The following diagram shows the indicator panel on a basic Slave Unit. The position and status of the indicators, may change depending on the specific Slave Unit.

Indicator	Color	Status	Definition	Meaning
MS	Green	ON	Device Operational	Normal operating status.
		Flashing	Device in Standby	Reading switch settings.
	Red	ON	Unrecoverable Fault	Unit hardware error: Watchdog timer error.
		Flashing	Minor Fault	Switch settings incorrect, etc.
	---	OFF	No Power	Power isn't being supplied, waiting for initial processing to start, or the Unit is being reset.
NS	Green	ON	Link OK. On-line, Connected.	Network is operating normally (communications established)
		Flashing	On-line, Not Connected	Network is operating normally, but communications have not yet been established.
	Red	ON	Critical Link Failure	A fatal communications error has occurred. Network communications are not possible. Check for a node address duplication or Bus Off error.
		Flashing	Connection Time-out	Communications timeout.
	---	OFF	Not Powered/ Not On-Line	Checking for node address duplication on the Master, switch settings are incorrect, or the power supply is OFF.

SECTION 4
General-purpose Slaves

This section provides specifications and describes the components, indicators, switch settings, and other aspects of General-purpose Slaves.

4-1 Common Specifications for General-purpose Slaves 33
4-1-1 Current Consumption and Weight 33
4-2 Connecting Communications Cables to General-purpose Slaves 34
4-2-1 Connecting Communications Cables 34
4-2-2 Connecting Communications Cables to the Nodes 37
4-2-3 Mounting Terminating Resistors 39
4-3 Transistor Remote I/O Terminals 40
4-3-1 Node Address, Baud Rate, and Output Hold/Clear Settings 40
4-3-2 Transistor Remote Input Terminals with 8 Points: DRT1-ID08 (NPN) and DRT1-ID08-1 (PNP) 41
4-3-3 Transistor Remote Input Terminals with 16 Points: DRT1-ID16 (NPN) and DRT1-ID16-1 (PNP) 45
4-3-4 Transistor Remote Output Terminals with 8 Points: DRT1-OD08 (NPN) and DRT1-OD08-1 (PNP). 49
4-3-5 Transistor Remote Output Terminals with 16 Points: DRT1-OD16 (NPN) and DRT1-OD16-1 (PNP). 53
4-3-6 Transistor Remote I/O Terminal with 8 Inputs and 8 Outputs: DRT1-MD16 (NPN) 56
4-3-7 Mounting in Control Panels 59
4-3-8 Wiring Internal Power Supplies, I/O Power Supplies, and I/O Lines 60
4-4 Transistor Remote I/O Terminals with 3-tier I/O Terminal Blocks 62
4-4-1 Node Address, Baud Rate, and Output Hold/Clear Settings 62
4-4-2 Transistor Remote Input Terminals with 16 Points and 3-tier I/O Terminal Blocks: DRT1-ID16T (NPN) and DRT1-ID16T-1 (PNP) 63
4-4-3 Transistor Remote Input Terminals with 16 Points and 3-tier I/O Terminal Blocks: DRT1-ID16TA (NPN) and DRT1-ID16TA-1 (PNP) 67
4-4-4 Transistor Remote Output Terminals with 16 Points and 3-tier I/O Terminal Blocks: DRT1-OD16T (NPN) and DRT1-OD16T-1 (PNP) 70
4-4-5 Transistor Remote Output Terminals with 16 Points and 3-tier I/O Terminal Blocks: DRT1-OD16TA (NPN) and DRT1-OD16TA-1 (PNP). 73
4-4-6 Transistor Remote I/O Terminals with 8 Inputs and 8 Outputs and 3-tier I/O Terminal Blocks: DRT1-MD16T (NPN) and DRT1-MD16T-1 (PNP). 77
4-4-7 Transistor Remote I/O Terminals with 8 Inputs and 8 Outputs and 3-tier I/O Terminal Blocks: DRT1-MD16TA (NPN) and DRT1-MD16TA-1 (PNP) 81
4-4-8 Mounting in Control Panels 85
4-4-9 Wiring Internal Power Supplies, I/O Power Supplies, and I/O Lines 86

4-5 Transistor Remote I/O Terminals with Connectors 87
4-5-1 Node Address, Baud Rate, and Output Hold/Clear Settings 87
4-5-2 Transistor Remote Input Terminals with 32 Points and Connectors: DRT1-ID32ML (NPN) and DRT1-ID32ML-1 (PNP) 88
4-5-3 Transistor Remote Output Terminals with 32 Points and Connectors: DRT1-OD32ML (NPN) and DRT1-OD32ML-1 (PNP) 93
4-5-4 Transistor Remote I/O Terminals with 16 Inputs and 16 Outputs and Connectors: DRT1-MD32ML (NPN) and DRT1-MD32ML-1 (PNP) 98
4-5-5 Mounting in Control Panels 103
4-5-6 Wiring Internal Power Supplies, I/O Power Supplies and I/O 108
4-6 Remote Adapters 111
4-6-1 Node Address, Baud Rate, and Output Hold/Clear Settings 111
4-6-2 Remote Input Adapters with 16 Points: DRT1-ID16X (NPN) and DRT1-ID16X-1 (PNP) 112
4-6-3 Remote Output Adapters with 16 Points: DRT1-OD16X (NPN) and DRT1-OD16X-1 (PNP) 117
4-6-4 Mounting in Control Panels 122
4-6-5 Wiring Internal Power Supplies, I/O Power Supplies, and I/O Lines 122
4-7 Sensor Terminals 124
4-7-1 Node Address, Baud Rate, and Output Hold/Clear Settings 124
4-7-2 Transistor Input Sensor Terminals with 16 Points: DRT1-HD16S . . 125
4-7-3 Transistor I/O Sensor Terminals with 8 Inputs and 8 Outputs: DRT1-ND16S 129
4-7-4 Mounting in Control Panels 132
4-7-5 Wiring Internal Power Supplies, I/O Power Supplies, and I/O Lines 133
4-8 Analog I/O Terminals 136
4-8-1 Node Address and Baud Rate Setting 136
4-8-2 Analog Input Terminals: DRT1-AD04 and DRT1-AD04H 137
4-8-3 Analog Output Terminal: DRT1-DA02 149
4-8-4 Mounting in Control Panels 156
4-8-5 Wiring Internal Power Supplies and I/O Lines 156
4-9 Temperature Input Terminals 157
4-9-1 Node Address and Baud Rate Settings 157
4-9-2 Temperature Input Terminals: DRT1-TS04T and DRT1-TS04P . . . 158
4-9-3 Mounting in Control Panels 169
4-9-4 Wiring Internal Power Supplies and I/O Lines 170
4-10 CQM1 I/O Link Unit 171
4-10-1 Node Address, Baud Rate, and Output Hold/Clear Settings 171
4-10-2 CQM1 I/O Link Unit: CQM1-DRT21 173
4-10-3 Mounting to Control Panels 174

4-1 Common Specifications for General-purpose Slaves

The following table lists specifications which are common to all General-purpose Slaves. For details of specifications for each Slave, refer to the following Slave specifications pages.

Item	Specifications
Communications power supply voltage	11 to 25 V DC (Supplied from the communications connector.)
Internal power supply voltage	20.4 to 26.4 V DC (24 V DC, –15 to +10%)
I/O power supply voltage	20.4 to 26.4 V DC (24 V DC, –15 to +10%)
Noise immunity	±1.5 kV_{p-p} Pulse width: 0.1 to 1 µs Pulse rise time: 1 ns (via noise simulator)
Vibration resistance	10 to 55 Hz, 1.0-mm double amplitude
Shock resistance	200 m/s^2
Dielectric strength	500 V AC (between isolated circuits)
Insulation resistance	20 MΩ min. at 250 V DC (between isolated circuits)
Ambient temperature	0 to 55°C
Ambient humidity	35% to 85%
Operating atmosphere	No corrosive gases
Storage temperature	–20 to 65°C
Mounting	M4 screw mounting or DIN 35-mm track mounting
Mounting strength	50 N Track direction: 10 N
Screw tightening torque	M2 (Communications connector): 0.25 to 0.3 N·m M3 (Power supply, I/O terminals): 0.3 to 0.5 N·m M4 (Mounting Unit): 0.6 to 0.98 N·m

4-1-1 Current Consumption and Weight

The following table lists the current consumption, weight, and connector lock strength for basic Slaves.

Model	Communications power supply	Internal power supply	Weight
DRT1-ID08(-1)	30 mA max.	50 mA max.	135 g max.
DRT1-ID16 (-1)	30 mA max.	50 mA max.	170 g max.
DRT1-OD08(-1)	30 mA max.	50 mA max.	140 g max.
DRT1-OD16 (-1)	30 mA max.	50 mA max.	180 g max.
DRT1-MD16	25 mA max.	45 mA max.	170 g max.
DRT1-ID16T(-1)	30 mA max.	90 mA max.	315 g max.
DRT1-ID16TA(-1)	50 mA max.	(Same as communications power supply)	315 g max.
DRT1-OD16T(-1)	30 mA max.	90 mA max.	315 g max.
DRT1-OD16TA(-1)	50 mA max.	(Same as communications power supply)	315 g max.
DRT1-MD16T(-1)	30 mA max.	90 mA max.	315 g max.
DRT1-MD16TA(-1)	50 mA max.	(Same as communications power supply)	315 g max.
DRT1-ID32ML(-1)	50 mA max.	(Same as communications power supply)	110 g max.
DRT1-OD32ML(-1)	90 mA max.	(Same as communications power supply)	100 g max.

Model	Communications power supply	Internal power supply	Weight
DRT1-MD32ML(-1)	70 mA max.	(Same as communications power supply)	110 g max.
DRT1-ID16X(-1)	30 mA max.	70 mA max.	110 g max.
DRT1-OD16X (-1)	30 mA max.	70 mA max.	110 g max.
DRT1-HD16S	40 mA max.	60 mA max.	140 g max.
DRT1-ND16S	40 mA max.	60 mA max.	140 g max.
DRT1-AD04	30 mA max.	80 mA max.	160 g max.
DRT1-AD04H	30 mA max.	130 mA max.	160 g max.
DRT1-DA02	30 mA max.	140 mA max.	160 g max.
DRT1-TS04T	30 mA max.	130 mA max.	230 g max.
DRT1-TS04P	30 mA max.	130 mA max.	160 g max.
CQM1-DRT21	40 mA max.	80 mA max. at 5 V DC (Power supplied from the PLC's Power Supply Unit.)	185 g max.
CPM1A-DRT21	30 mA max.	50 mA max. at 5 V DC (Power supplied from the PLC's CPU Unit.)	125 g max.

4-2 Connecting Communications Cables to General-purpose Slaves

Communications cables are connected to General-purpose Slaves using normal square connectors.

4-2-1 Connecting Communications Cables

Use the following procedure to prepare and connect the communications cables to the connectors. Although some connectors are equipped with set screws and some are not, the methods used to connect the cables to the connectors are the same.

1,2,3...

1. Remove about 30 to 80 mm of the cable covering, being careful not to damage the shield weaving underneath. Do not remove more than necessary; removing too much of the covering can result in short circuits.

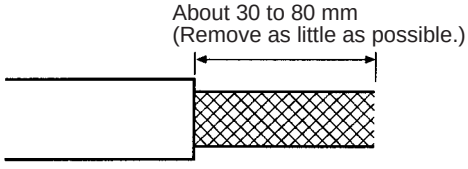

2. Carefully peel back the weaving. You will find the signal lines, power lines, and the shielding wire. The shielding wire will be loose on the outside of the other lines, but it is harder than the weaving and should be easily identified.

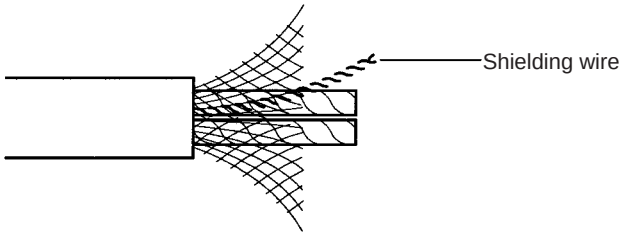

3. Remove the exposed weaving, remove the aluminum tape from the signal and power lines, and strip the covering from the signal and power lines to the proper length for the crimp terminal connectors. Twist together the wires of each of the signal and power lines.

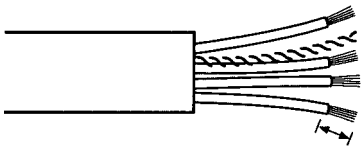

Strip to match the crimp terminals

4. Attach the crimp terminals to the lines and then cover any exposed areas of the cable and lines with electricians tape or heat-shrinking tubes.
5. Orient the connector properly, loosen the line set screws, and then insert the lines in order: Black, blue, shield, white, and then red. The wiring method is the same regardless of whether or not the connector is equipped with set screws.

Connector without Set Screws

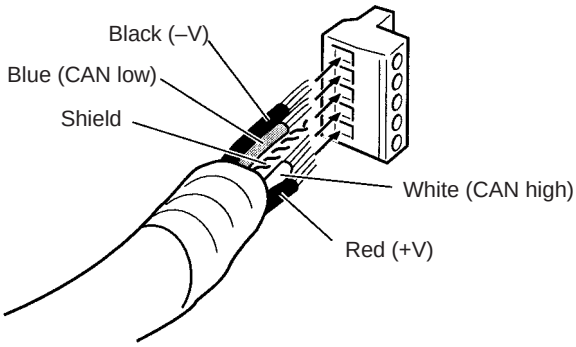

Connector with Set Screws

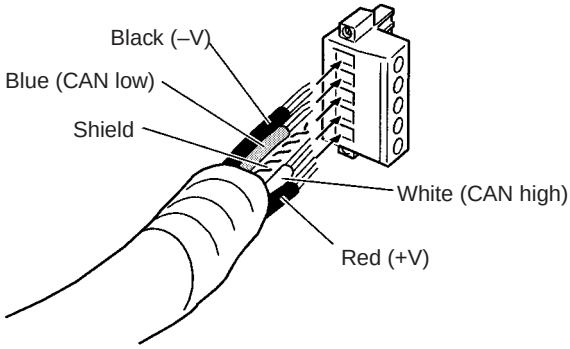

There are colored stickers provided on the Master Unit and Slaves that match the colors of the lines to be inserted. Be sure that the colors match when wiring the connectors. These colors are as follows:

Color	Signal
Black	Power line, negative voltage (–V)
Blue	Communications line, low (CAN low)
---	Shield
White	Communications line, high (CAN high)
Red	Power line, positive voltage (+V)

Note Be sure the line set screws are sufficiently loosened before attempting to insert the lines. If these screws are not loose, the lines will enter the gaps in the back of the connector and will not lock properly.

6. Tighten the line set screws for each line in the connector. Tighten the screws to a torque of 0.25 to 0.3 N·m.

   You will not be able to tighten these screws with a normal screwdriver, which narrows to a point at the end. You will need a screwdriver that is consistently thin for the entire length.

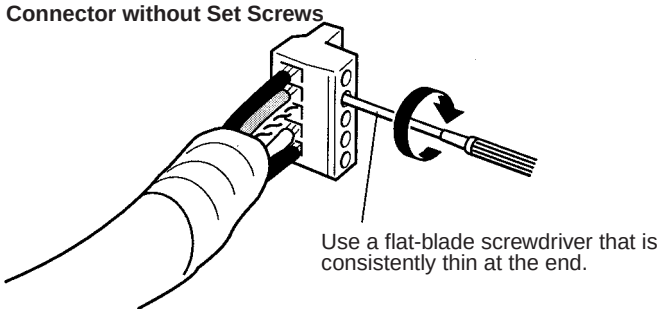

Crimp Terminals

We recommend the following crimp terminals.

- Phoenix Contact, AI-series Crimp Terminals

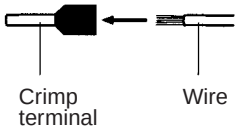

Insert the line into the terminal and then crimp.

The following crimp tool is also available.

Phoenix Contact, ZA3 Crimp Tool

The OMRON XW4Z-00C Screwdriver is available for tightening the line set screws. The end of the screwdriver has the following dimensions.

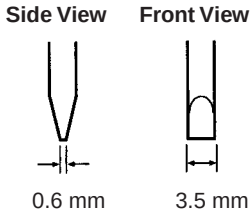

- Supplying Communications Power Using T-branch Taps
  Connect the V+ and V– of the power lines to the connectors in the same way as for the communications cables. If the communications power sup-

ply is in one location only, connect a shield to the connectors when fixing them, and ground to 100 Ω max.

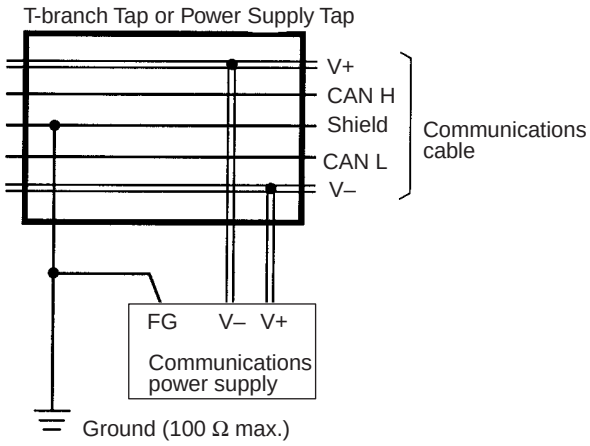

Power supply with cable grounded (one location only)

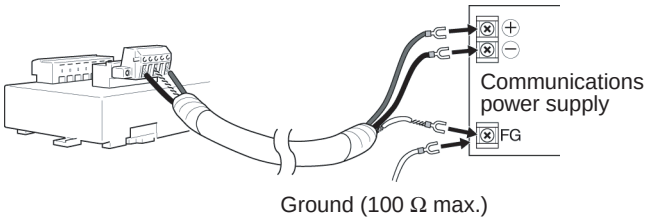

4-2-2 Connecting Communications Cables to the Nodes

Align the node connector with the cable connector and fully insert the projecting part of the cable connector into the node connector. Depending on the type of Slave used, the connectors are secured with screws or a connector band, or there is no component for securing the connectors. Always fix securely those connectors that can be secured.

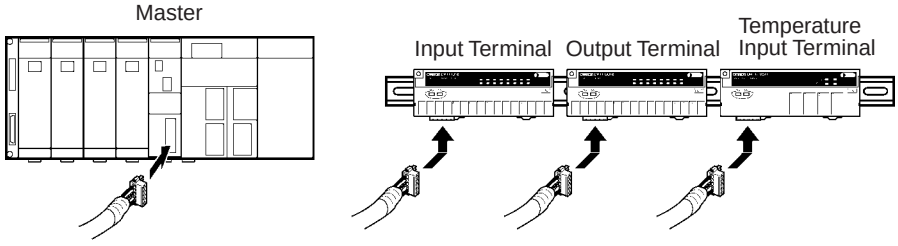

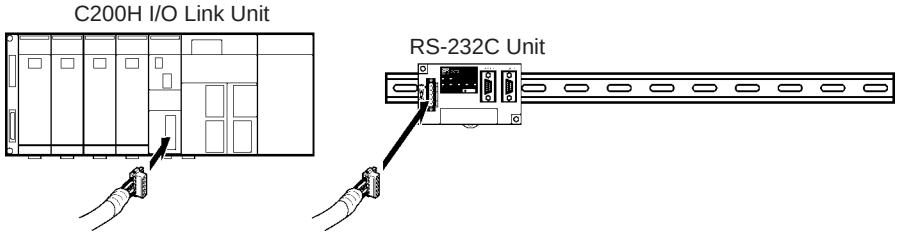

Securing Slave Connectors with Screws

Tighten the screws fixing the connectors to a torque of 0.25 to 0.3 N·m.

Securing Slave Connectors with Connector Bands

Use the following procedure to secure connectors with connector bands.

1,2,3... 1. Pull out the connector band from the Slave Unit.

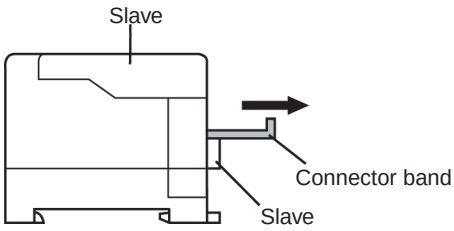

2. Lift up the connector band.
3. Insert the connector into the Slave Unit.

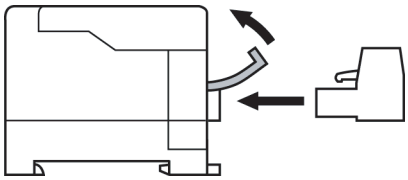

4. Wrap the connector band around the connector and secure firmly.

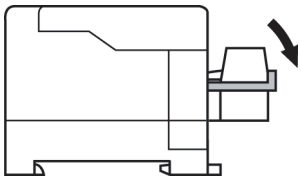

Note Multidrop connectors cannot be secured.

Multi-drop Connections

- Multi-drop Connections with Accessory Connector (Thin Cables Only)
  The connectors provided with the Units can be used for a multi-drop connection as long as thin cables are being used, just insert both lines into the same hole in the connector. Be sure to use crimp connectors on both lines. The following illustration shows a multi-drop connection for a connector without set screws.

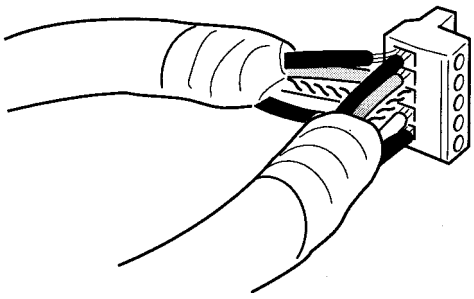

When connecting two lines to the same hole, first place them together in one pressure-welded terminal as shown below.

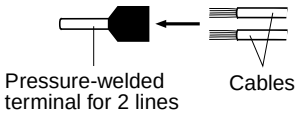

Pressure-welded terminal: Pheonix Contacts model AI-TWIN2X0.5-8WH (product number 3200933)

Pressure-welding tool: Pheonix Contacts model UD6 (product number 1204436)

- Multi-drop Connections with Special Connector (Thin or Thick Cables)
  A multi-drop wiring connector (sold separately) can be used to wire a multi-drop connector for either thin or thick cables. This multi-drop wiring connector is required to wire a multi-drop connection with thick cables, which are too thick for two lines to fit into the connector provided with the Units.

  The multi-drop wiring connector cannot always be used with Master Units or the CQM1 I/O Link Units because it may come into contact with the Units mounted next to the Master Unit or the CQM1 I/O Link Unit. If this happens, use a T-branch Tap to wire the connection.

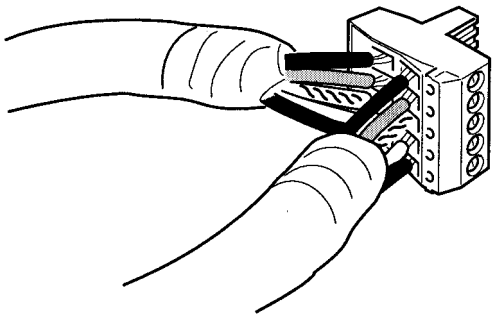

4-2-3 Mounting Terminating Resistors

Terminating Resistors must be used at both ends of the trunk line.

Terminating Resistors

- T-branch Tap Terminating Resistors
  A terminating resistor is included with the T-branch Tap. Clip the leads on the resistor to about 3 mm and insert it into the T-branch Tap as shown in the following diagram. The resistor can face in either direction.

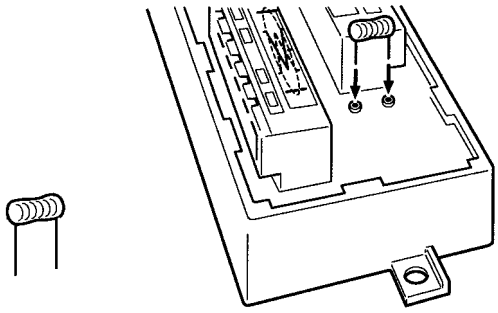

- Terminal-block Terminating Resistors
  A terminating resistor is built into the Terminal-block Terminating Resistor. To connect the cable to the Terminating Resistor, attach standard M3 crimp terminals to the signal wires and securely screw the terminals to the Terminal-block Terminating Resistor. Tighten to a torque of 0.3 to 0.5 N·m.

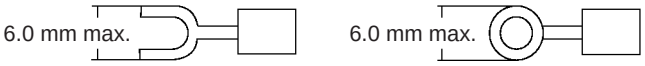

4-3 Transistor Remote I/O Terminals

4-3-1 Node Address, Baud Rate, and Output Hold/Clear Settings

This section describes the Slaves' node address setting, baud rate settings, and hold/clear outputs for communications error setting. These settings are made using the following pins on the DIP switch.

Node address setting: Pins 1 through 6
Baud rate setting: Pins 7 and 8

Output hold/clear setting:Pin 10 (affects only outputs)

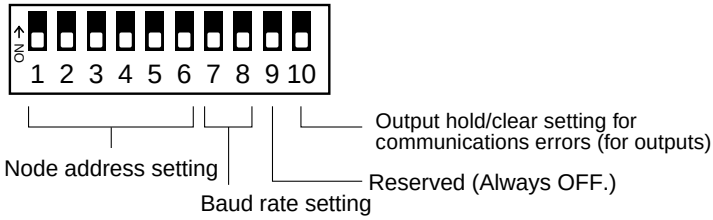

Node Address Settings

The node address of the Remote I/O Terminal is set with pins 1 through 6 of the DIP switch. Any node address within the setting range can be used as long as it isn't already set on another node.

DIP switch setting						Node address
Pin 6	Pin 5	Pin 4	Pin 3	Pin 2	Pin 1	
0	0	0	0	0	0	0 (default)
0	0	0	0	0	1	1
0	0	0	0	1	0	2
⋮						⋮
1	1	1	1	0	1	61
1	1	1	1	1	0	62
1	1	1	1	1	1	63

0: OFF, 1: ON

Note

1. Refer to *Appendix A Node Address Settings Table* for a complete table of DIP switch settings.
2. The Slave won't be able to participate in communications if the same node address is used for the Master or another Slave node (node address duplication error).

Baud Rate Setting

Pins 7 and 8 are used to set the baud rate as shown in the following table.

Pin 7	Pin 8	Baud rate
OFF	OFF	125 kbps (default)
ON	OFF	250 kbps
OFF	ON	500 kbps
ON	ON	Not allowed.

Note

1. Always turn OFF the Slave's power supply (including the communications power supply) before changing the baud rate setting.
2. Set the same baud rate on all of the nodes (master and slaves) in the Network. Any slaves with baud rates different from the master's rate won't be able to participate in communications. Furthermore, a node with an incorrect baud rate may cause communications errors between nodes with correct baud rate settings.

Setting Pins 9 and 10

The functions of pins 9 and 10 differ for inputs and outputs, as shown in the following diagram.

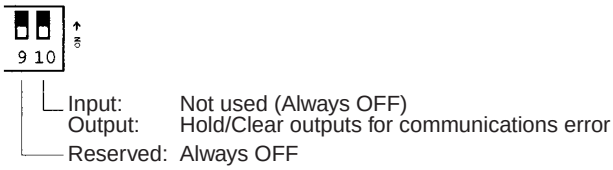

Pin 9: Reserved (Always OFF)

Pin 10: As follows:

Inputs:	No function (Always OFF)
Outputs:	Hold/Clear outputs for communications error
OFF (Clear):	All output data from the Master will be cleared to 0 when a communications error occurs.
ON (Hold):	All output data from the Master will be retained when a communications error occurs.

Pins 9 and 10 are factory-set to OFF.

4-3-2 Transistor Remote Input Terminals with 8 Points: DRT1-ID08 (NPN) and DRT1-ID08-1 (PNP)

Input Specifications

Item	Specification	
Model	DRT1-ID08	DRT1-ID08-1
Internal I/O common	NPN	PNP
Input points	8 points (allocated one word in Master)	
ON voltage	15 V DC min. (between each input terminal and V)	15 V DC min. (between each input terminal and G)
OFF voltage	5 V DC max. (between each input terminal and V)	5 V DC max. (between each input terminal and G)
OFF current	1 mA max.	
Input current	10 mA max./point	
ON delay time	1.5 ms max.	
OFF delay time	1.5 ms max.	
Number of circuits	8 points with one common	

Components of the DRT1-ID08 and DRT1-ID08-1

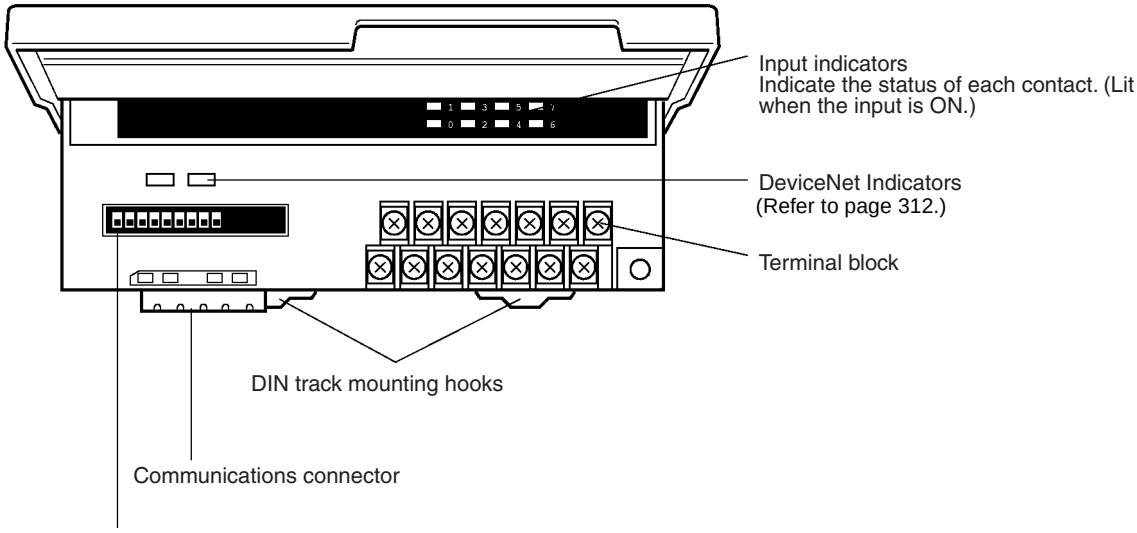

DIP switch (Refer to page 40.)

Pins 1 to 6: Node address setting
Pins 7 and 8: Baud rate setting
Pins 9 and 10: Reserved (Always OFF.)

Internal Circuits

The following diagram shows the internal circuits for the DRT1-ID08 Input Terminal.

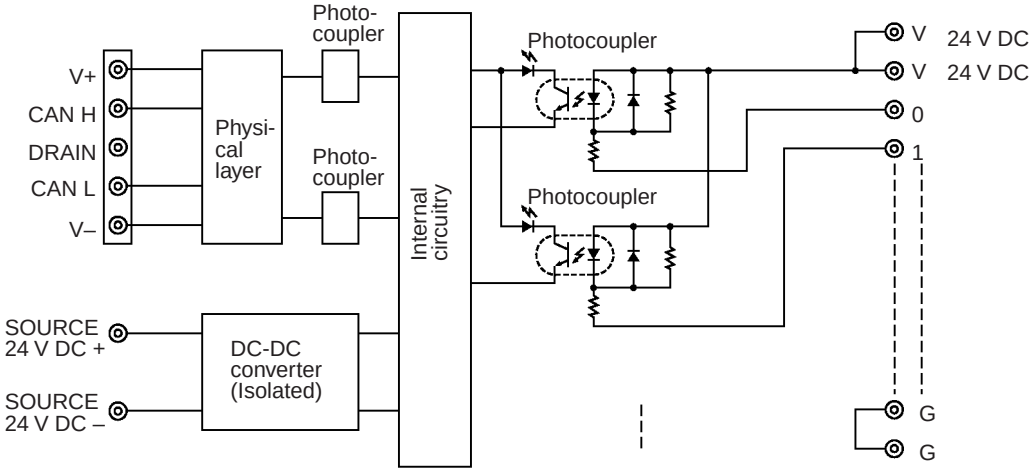

The following diagram shows the internal circuits for the DRT1-ID08-1 Remote Input Terminal.

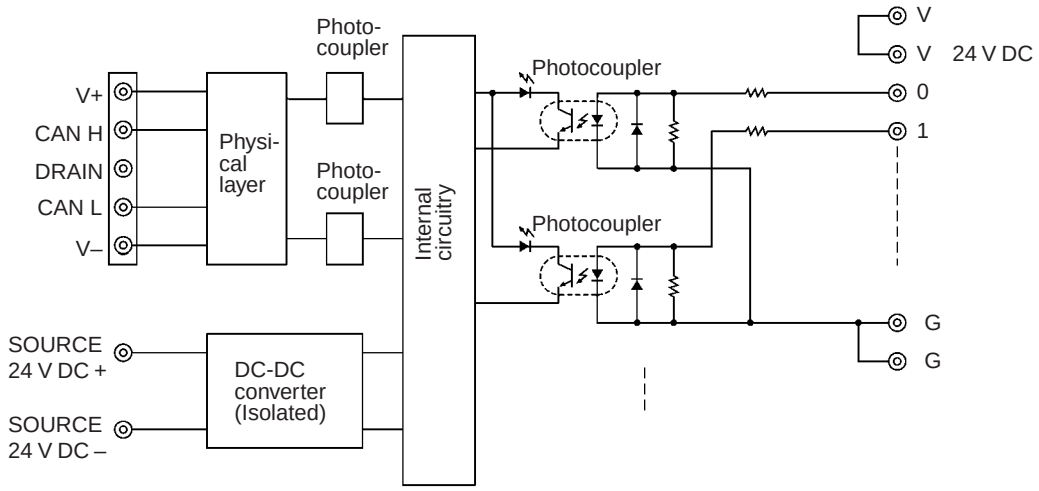

Wiring

The following diagram shows the wiring of the DRT1-ID08 Remote Input Terminal.

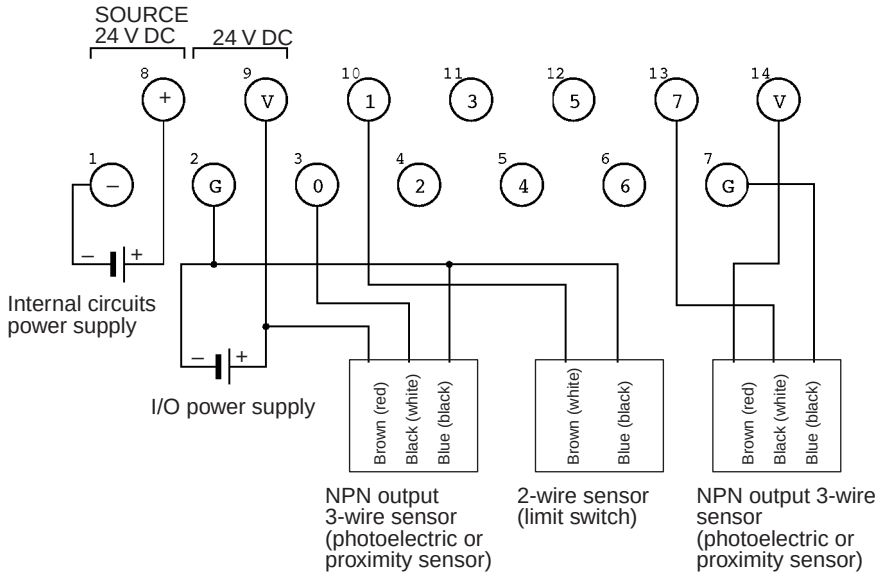

The following diagram shows the wiring of the DRT1-ID08-1 Remote Input Terminal.

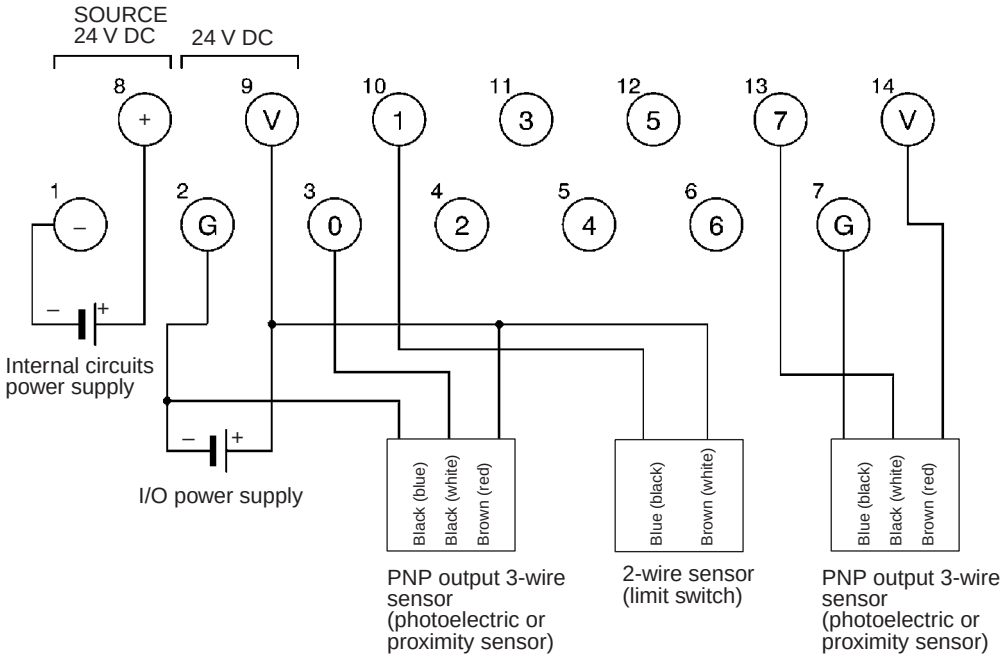

Note

1. The V terminals (terminal numbers 9 and 14) are connected internally, as are the G terminals (terminal numbers 2 and 7). When I/O power is supplied to terminals 9 and 2, power can be supplied to sensors from terminals 14 and 7.
   When the power supply exceeds 1.2 A, the power supply should not be input through the terminals; an external power supply must be used instead.
2. Wire colors in parentheses are the previous JIS colors for photoelectric and proximity sensors.

Dimensions

The following diagram shows the dimensions for the DRT1-ID08 and DRT1-ID08-1 Remote Input Terminals. All dimensions are in mm.

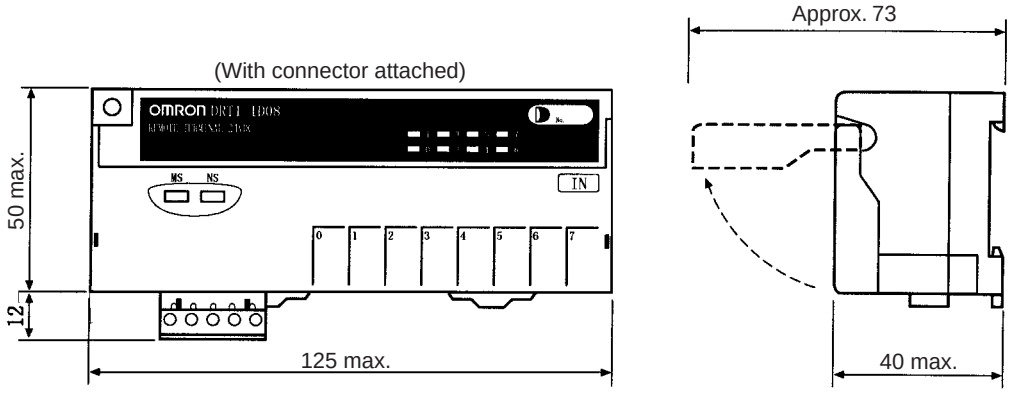

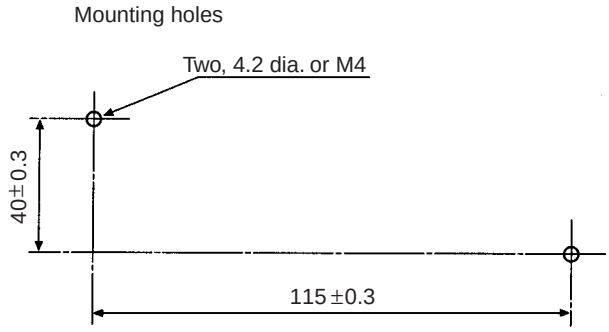

4-3-3 Transistor Remote Input Terminals with 16 Points: DRT1-ID16 (NPN) and DRT1-ID16-1 (PNP)

Input Specifications

Item	Specification	
Model	DRT1-ID16	DRT1-ID16-1
Internal I/O common	NPN	PNP
Input points	16 points	
ON voltage	15 V DC min. (between each input terminal and V)	15 V DC min. (between each input terminal and G)
OFF voltage	5 V DC max. (between each input terminal and V)	5 V DC max. (between each input terminal and G)
OFF current	1 mA max.	
Input current	10 mA max./point	
ON delay time	1.5 ms max.	
OFF delay time	1.5 ms max.	
Number of circuits	16 points with one common	

Components of the DRT1-ID16 and DRT1-ID16-1

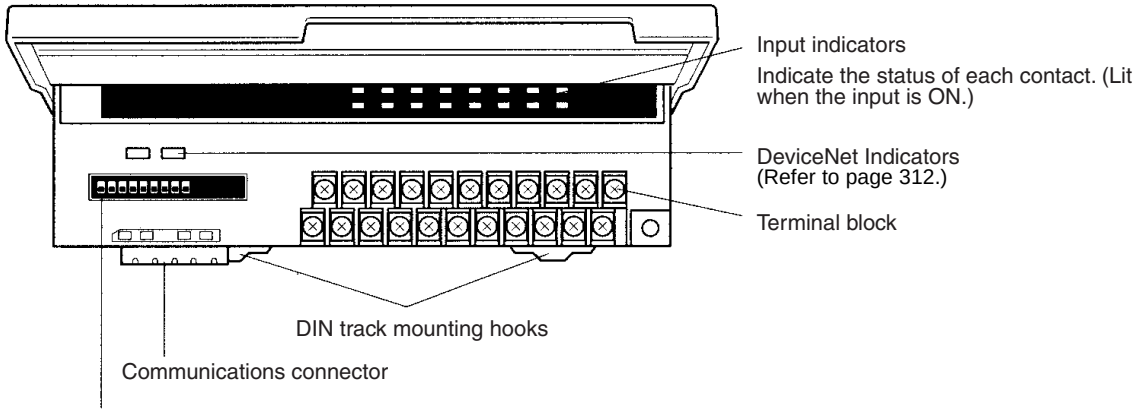

DIP switch (Refer to page 40.)

Pins 1 to 6: Node address setting
Pins 7 and 8: Baud rate setting
Pins 9 and 10: Reserved (Always OFF.)

Internal Circuits

The following diagram shows the internal circuits for the DRT1-ID16 Remote Input Terminal.

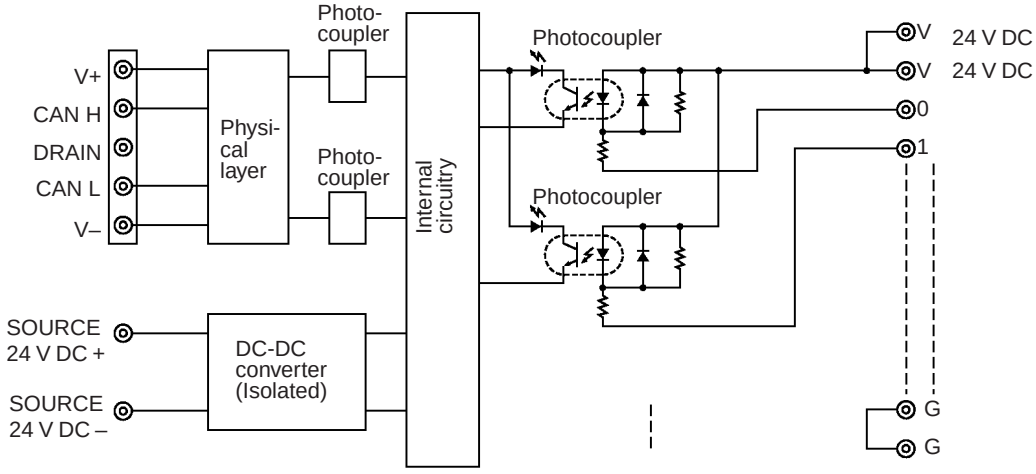

The following diagram shows the internal circuits for the DRT1-ID16-1 Remote Input Terminal.

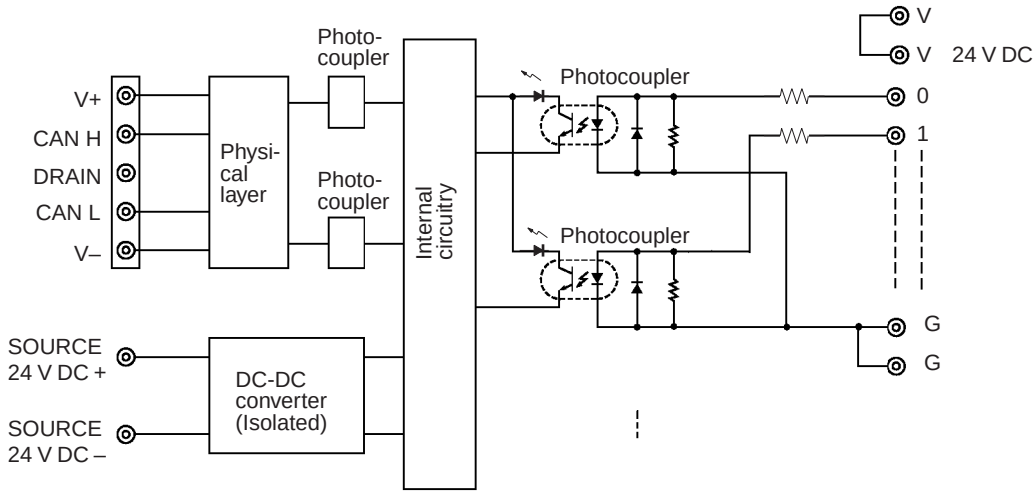

Wiring

The following diagram shows the wiring of the DRT1-ID16 Remote Input Terminal.

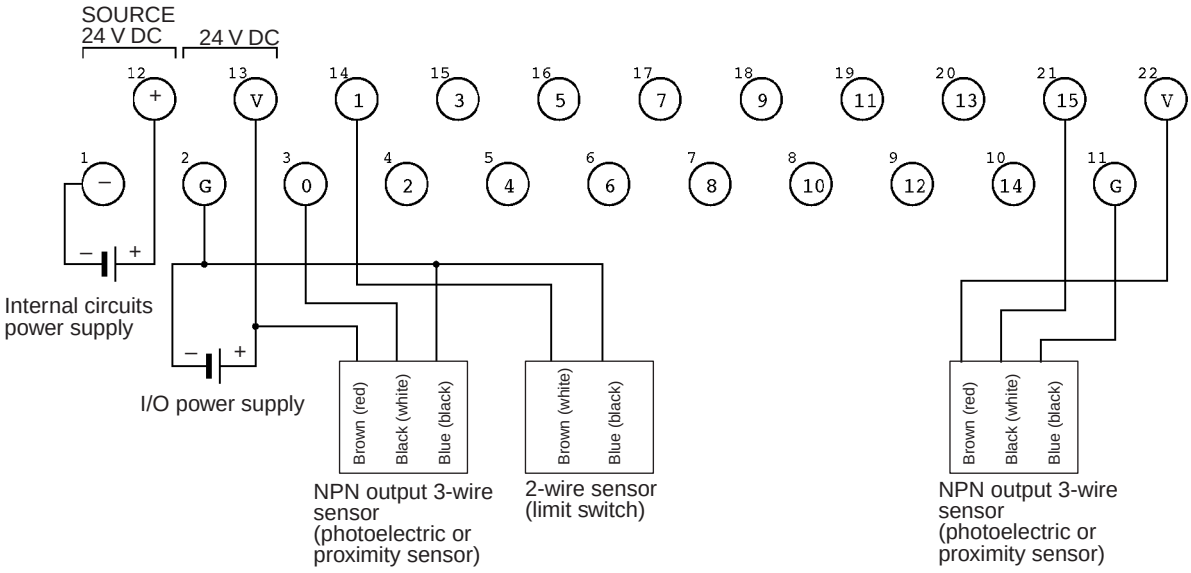

The following diagram shows the wiring of the DRT1-ID16-1 Remote Input Terminal.

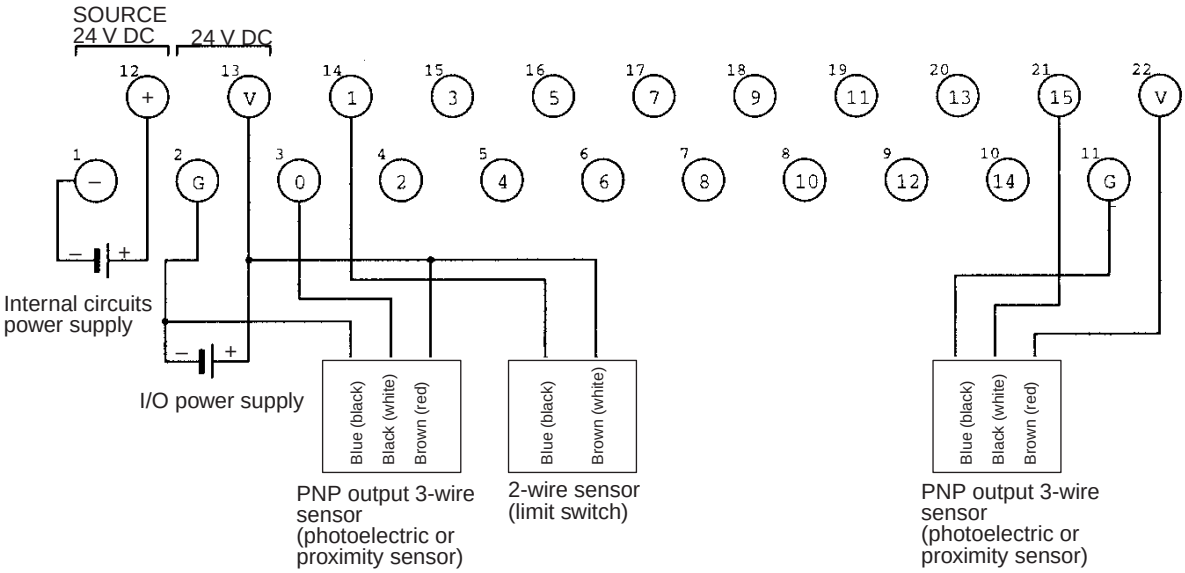

Note

1. Wire colors in parentheses are the previous JIS colors for photoelectric and proximity sensors.
2. The V terminals (terminal numbers 13 and 22) are connected internally, as are the G terminals (terminal numbers 2 and 11). When I/O power is supplied to terminals 13 and 2, power can be supplied to sensors from terminals 22 and 11.
   When the power supply exceeds 1.2 A, the power supply should not be input through the terminals; an external power supply must be used instead.

Dimensions

The following diagram shows the dimensions for the DRT1-ID16 and DRT1-ID16-1 Remote Input Terminals. All dimensions are in mm.

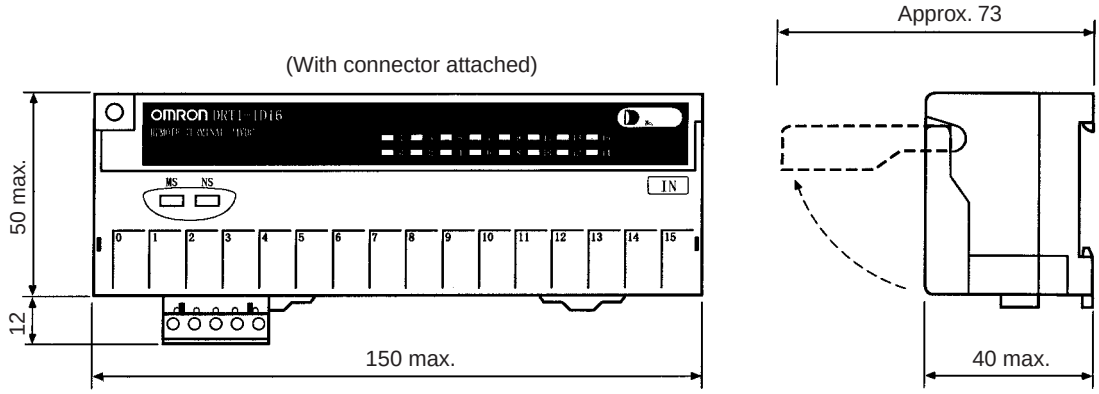

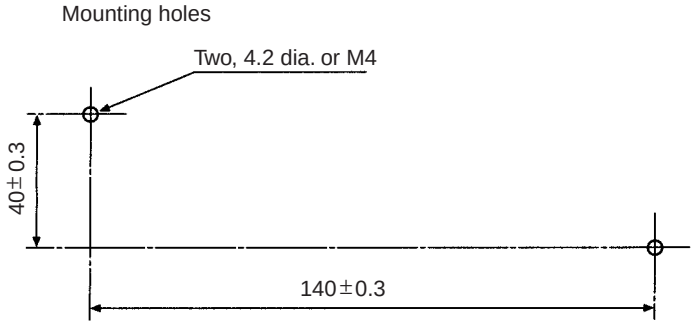

4-3-4 Transistor Remote Output Terminals with 8 Points: DRT1-OD08 (NPN) and DRT1-OD08-1 (PNP)

Output Specifications

Item	Specification	
Model	DRT1-OD08	DRT1-OD08-1
Internal I/O common	NPN	PNP
Output points	8 points (Master Unit uses one word)	
Rated output current	0.3 A/point, 2.4 A/common	
Residual voltage	1.2 V max. (at 0.3 A, between each output terminal and G)	1.2 V max. (at 0.3 A, between each output terminal and V)
Leakage current	0.1 mA max.	
ON delay time	0.5 ms max.	
OFF delay time	1.5 ms max.	
Number of circuits	8 points with one common	

Components of the DRT1-OD08 and DRT1-OD08-1

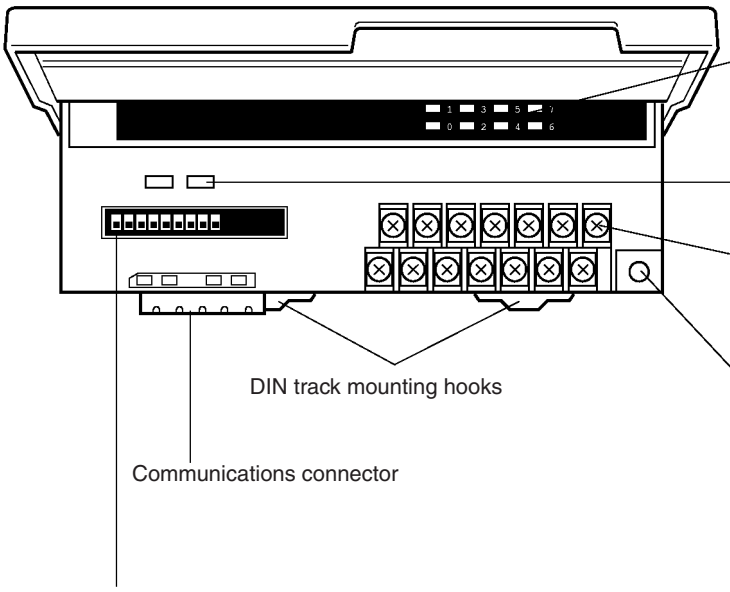

DIP switch (Refer to page 40.)

Pins 1 to 6: Node address setting
Pins 7 and 8: Baud rate setting
Pin 9: Reserved (Always OFF.)
Pin 10: Hold/Clear outputs for communications error

Internal Circuits

The following diagram shows the internal circuits for the DRT1-OD08 Remote Output Terminal.

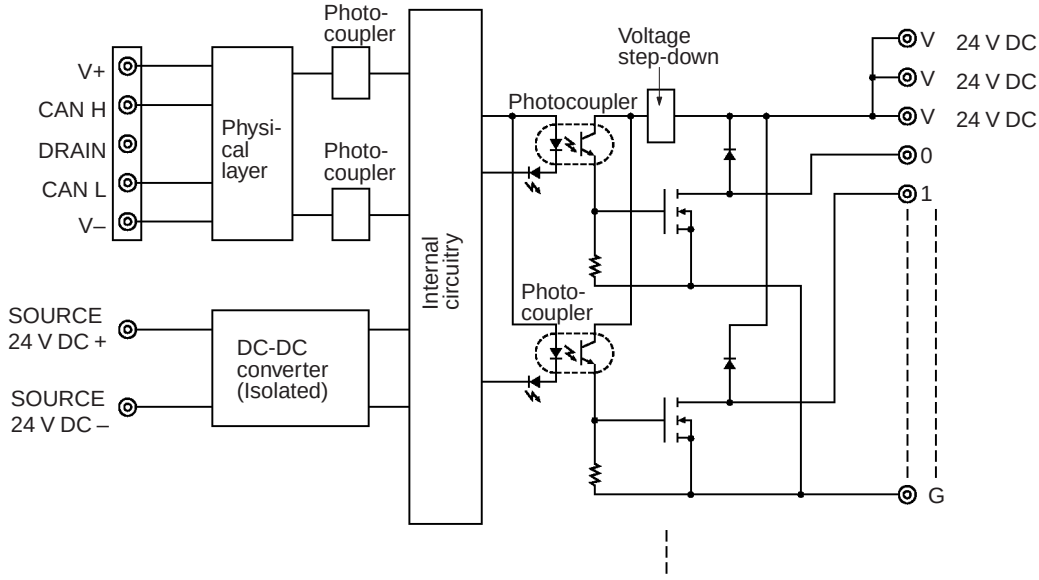

The following diagram shows the internal circuits for the DRT1-OD08-1 Remote Output Terminal.

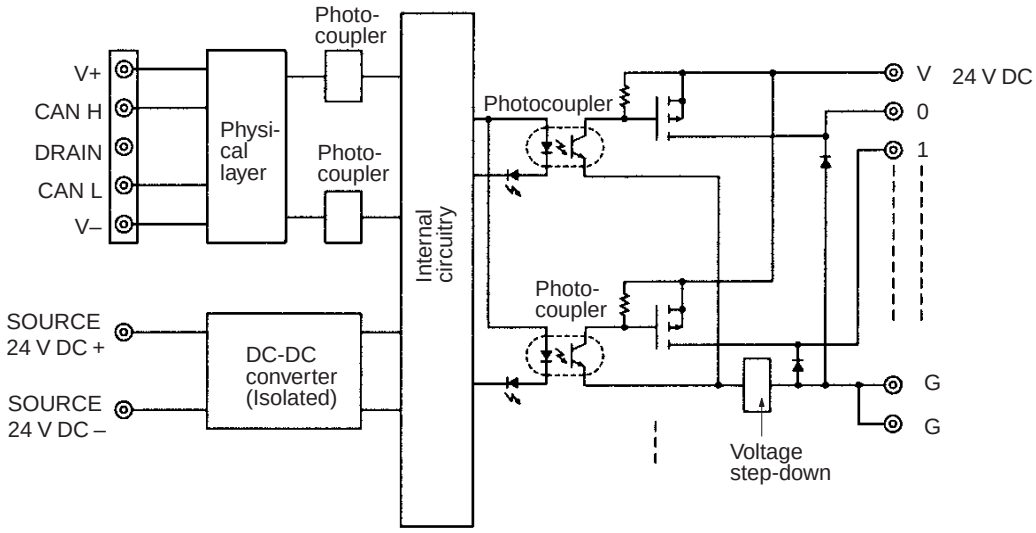

Wiring

The following diagram shows the wiring of the DRT1-OD08 Remote Output Terminal.

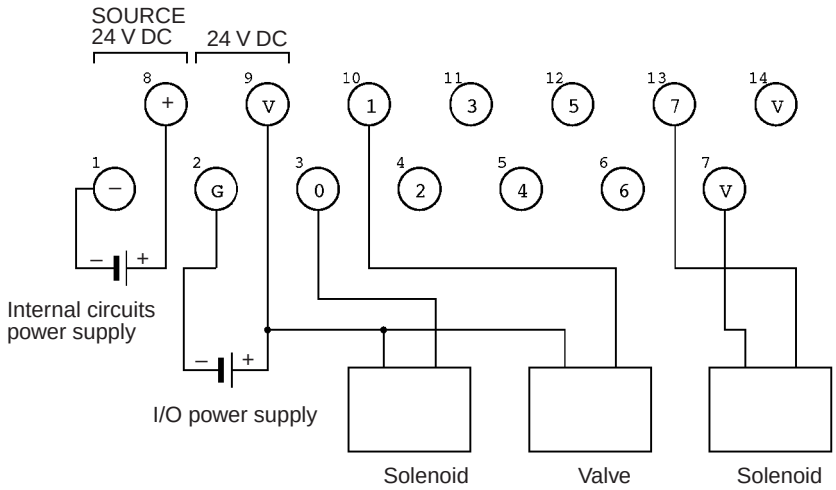

Note The V terminals (terminal numbers 7, 9, and 14) are connected internally. When I/O power is supplied to terminals 9, power can be supplied to output devices from terminals 7 and 14.
When the power supply exceeds 1.2 A, the power supply should not be input through the terminals; an external power supply must be used instead.

The following diagram shows the wiring of the DRT1-OD08-1 Remote Output Terminal.

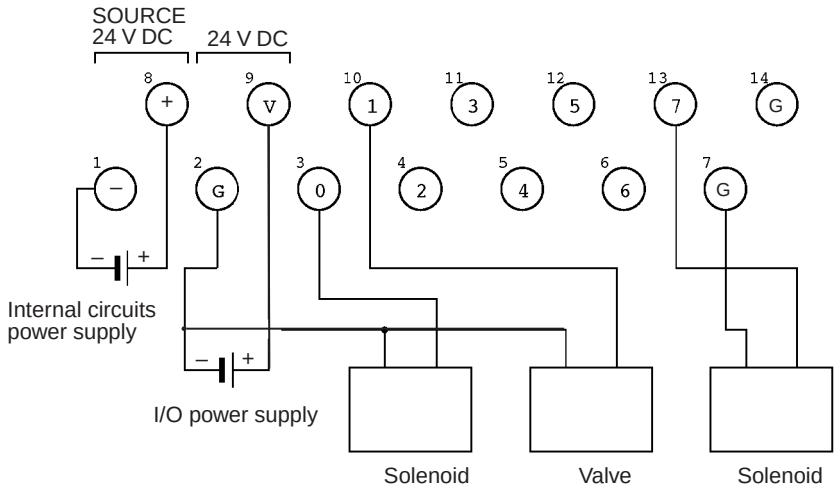

Note The G terminals (terminal numbers 2, 7, and 14) are connected internally. When I/O power is supplied to terminal 2, power can be supplied to output devices from terminals 7 and 14.
When the power supply exceeds 1.2 A, the power supply should not be input through the terminals; an external power supply must be used instead.

Dimensions

The following diagram shows the dimensions for the DRT1-OD08 and DRT1-OD08-1 Remote Output Terminals. All dimensions are in mm.

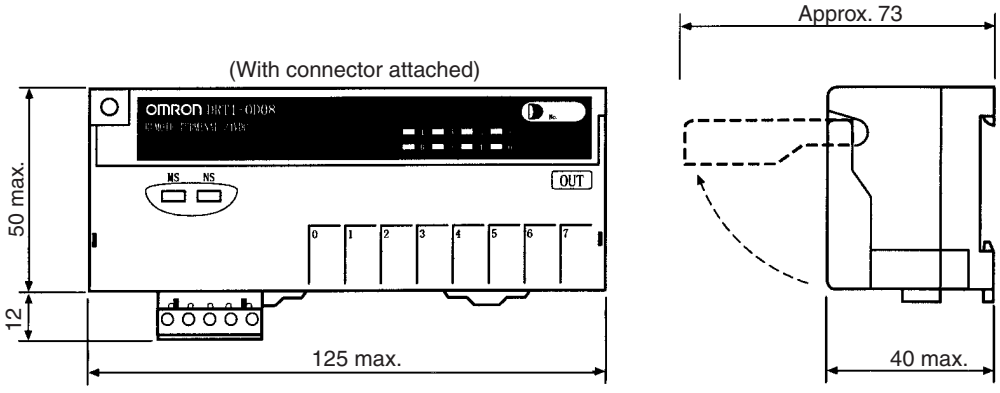

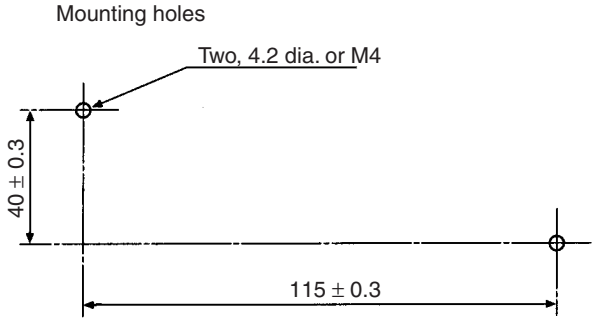

4-3-5 Transistor Remote Output Terminals with 16 Points: DRT1-OD16 (NPN) and DRT1-OD16-1 (PNP)

Output Specifications

Item	Specification	
Model	DRT1-OD16	DRT1-OD16-1
Internal I/O common	NPN	PNP
Output points	16 points	
Rated output current	0.3 A/point, 2.4 A/common	
Residual voltage	1.2 V max. (at 0.3 A, between each output terminal and G)	1.2 V max. (at 0.3 A, between each output terminal and V)
Leakage current	0.1 mA max.	
ON delay time	0.5 ms max.	
OFF delay time	1.5 ms max.	
Number of circuits	16 points with one common	

Components of the DRT1-OD16 and DRT1-OD16-1

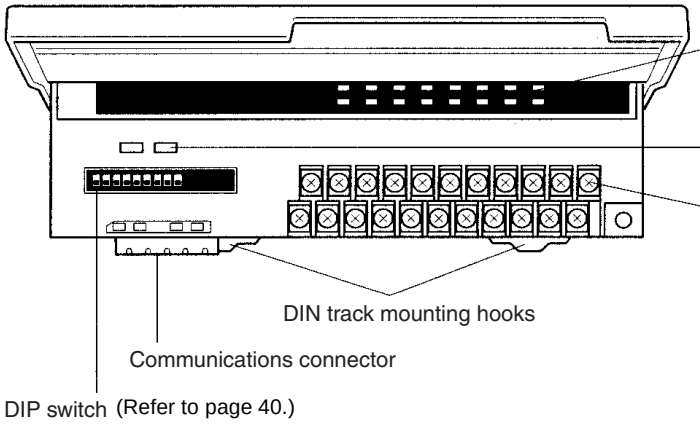

Internal Circuits

The following diagram shows the internal circuits for the DRT1-OD16 Remote Output Terminal.

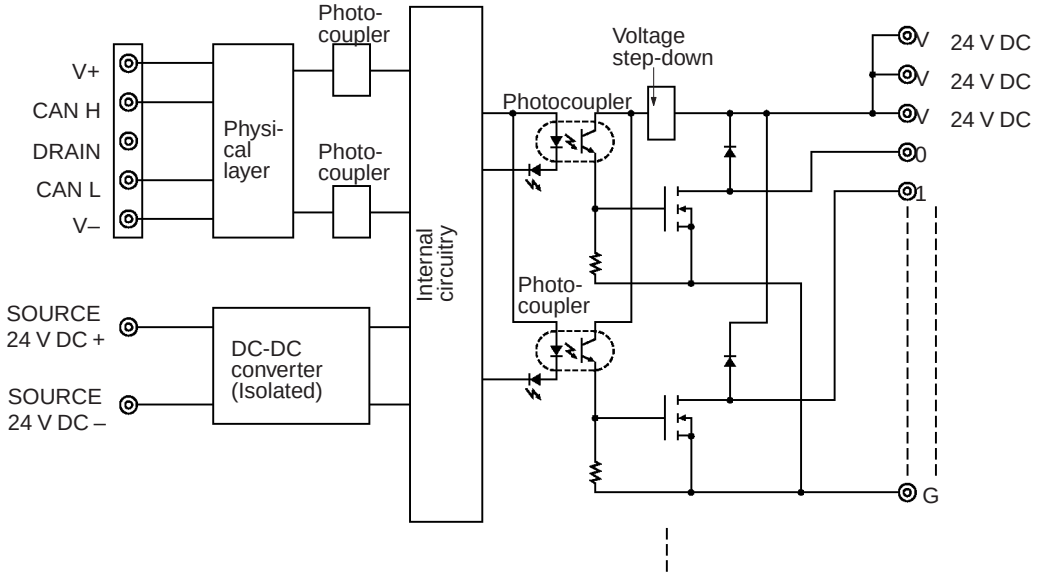

The following diagram shows the internal circuits for the DRT1-OD16-1 Remote Output Terminal.

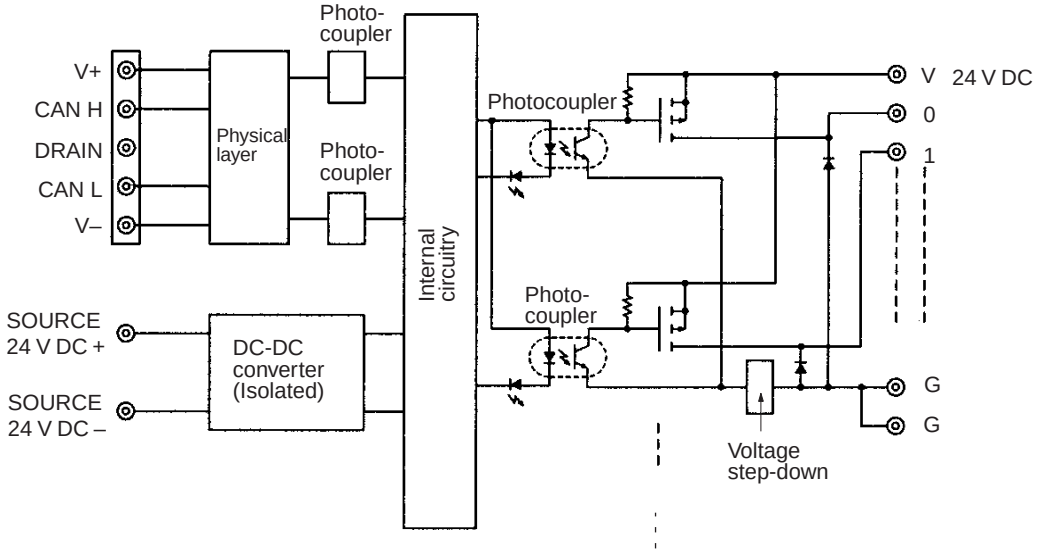

Wiring

The following diagram shows the wiring of the DRT1-OD16 Remote Output Terminal.

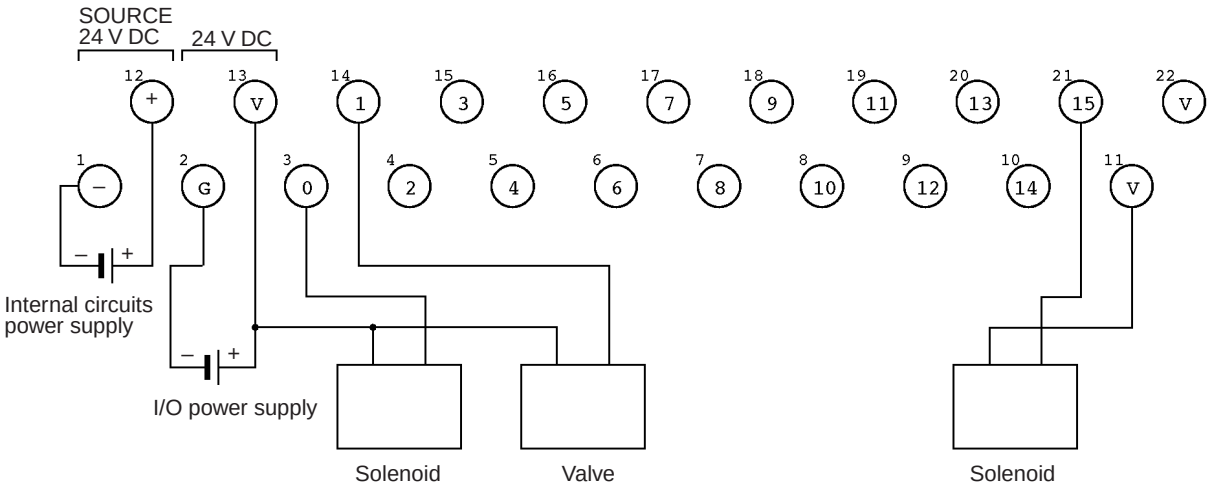

Note The V terminals (terminal numbers 11, 13, and 22) are connected internally. When I/O power is supplied to terminal 13, power can be supplied to output devices from terminals 22 and 11.
When the power supply exceeds 1.2 A, the power supply should not be input through the terminals; an external power supply must be used instead.

The following diagram shows the wiring of the DRT1-OD16-1 Remote Output Terminal.

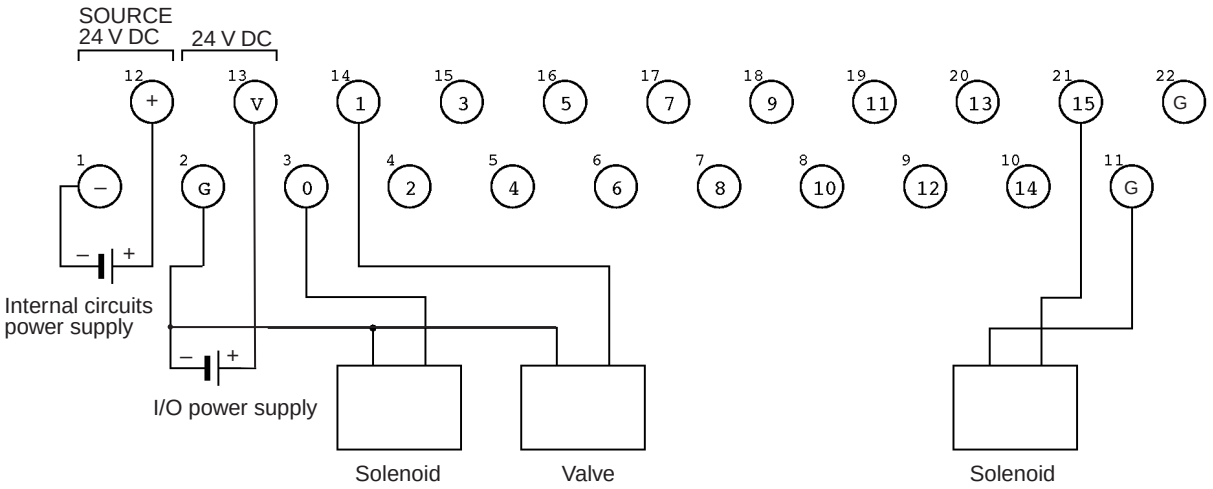

Note The G terminals (terminal numbers 2, 11, and 22) are connected internally. When I/O power is supplied to terminal 2, power can be supplied to output devices from terminals 22 and 11.
When the power supply exceeds 1.2 A, the power supply should not be input through the terminals; an external power supply must be used instead.

Dimensions

The following diagram shows the dimensions for the DRT1-OD16 and DRT1-OD16-1 Remote Output Terminals. All dimensions are in mm.

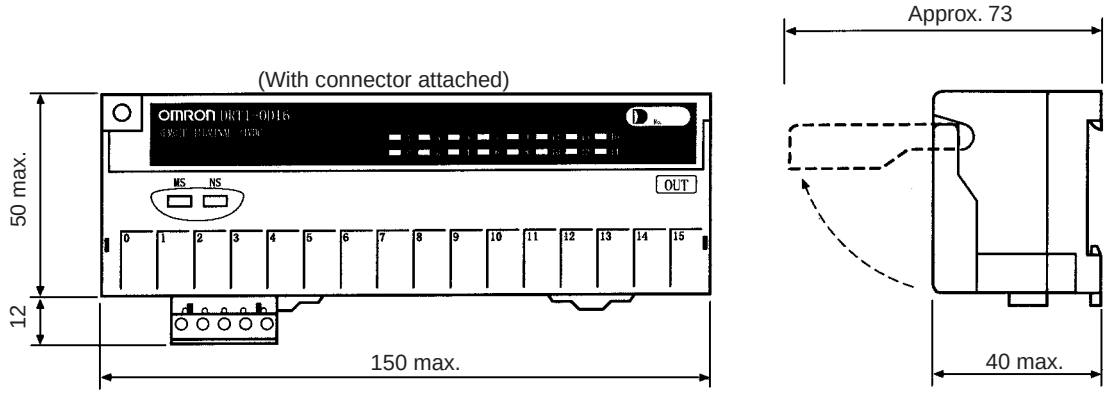

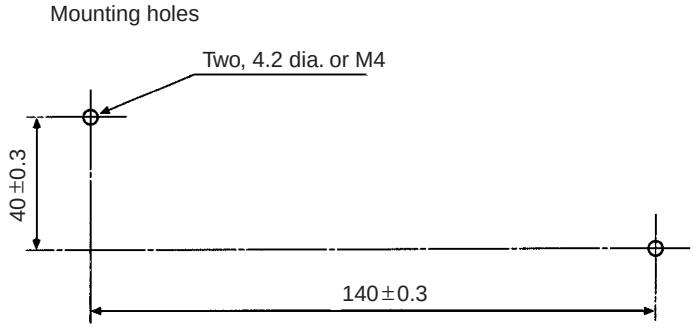

4-3-6 Transistor Remote I/O Terminal with 8 Inputs and 8 Outputs: DRT1-MD16 (NPN)

Input Specifications

Item	Specification
Model	DRT1-MD16
Internal I/O common	NPN
Input points	8 points
ON voltage	15 V DC min. (between each input terminal and IN V)
OFF voltage	5 V DC max. (between each input terminal and IN V)
OFF current	1 mA max.
Input current	10 mA max./point
ON delay time	1.5 ms max.
OFF delay time	1.5 ms max.
Number of circuits	8 points with one common

Output Specifications

Item	Specification
Model	DRT1-MD16
Internal I/O common	NPN
Output points	8 points
Rated output current	0.3 A/point, 2.4 A/common
Residual voltage	1.2 V max. (at 0.3 A, between each output terminal and OUT G)
Leakage current	0.1 mA max.
ON delay time	0.5 ms max.
OFF delay time	1.5 ms max.
Number of circuits	8 points with one common

Components

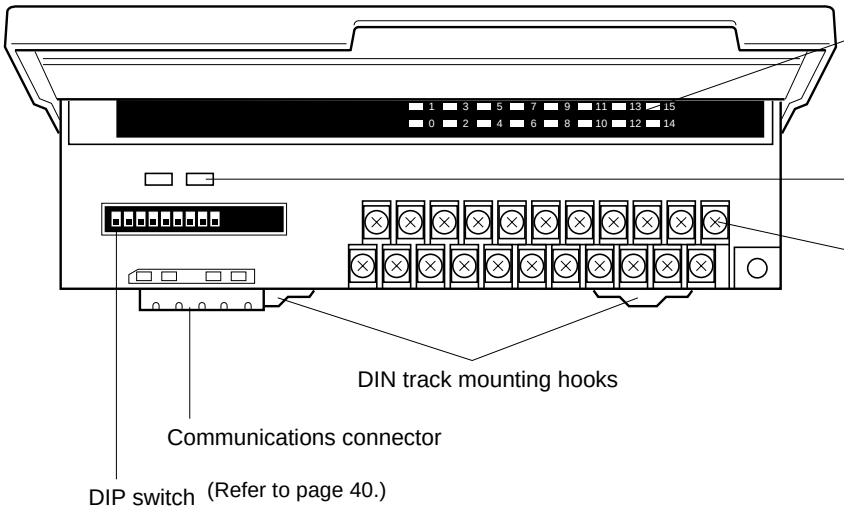

Internal Circuits

The following diagram shows the internal circuits for the DRT1-MD16 Remote I/O Terminal.

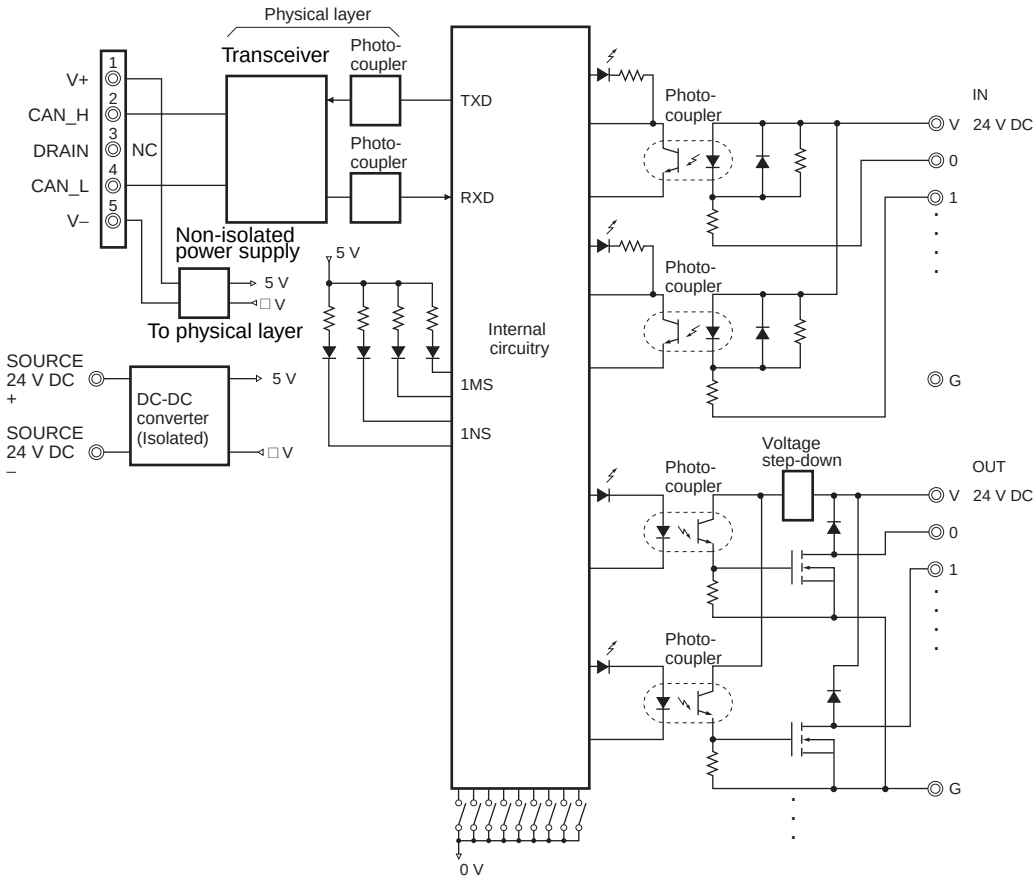

Wiring

The following diagram shows the wiring of the DRT1-MD16 Remote I/O Terminal.

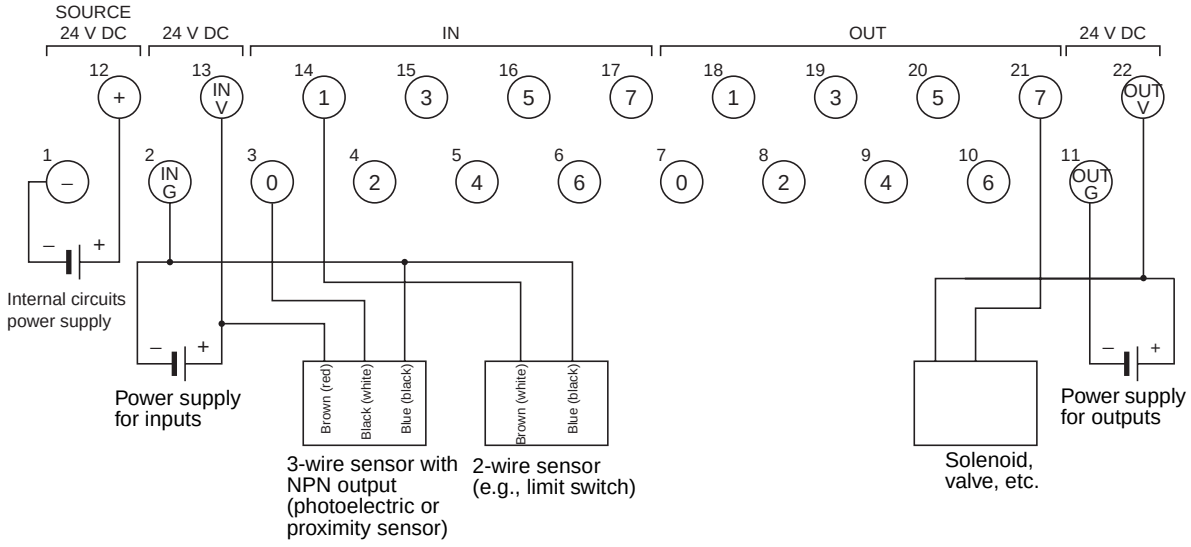

Note 1. IN V is not connected internally to OUT V (terminals 13 and 22), and IN G is not connected internally to OUT G (terminals 2 and 11). Connect them carefully.

2. Line colors have been changed accompanying changes in JIS standards for photoelectric and proximity sensors. Previous colors are given in parentheses.

Dimensions

The following diagram shows the dimensions for the DRT1-MD16 Remote I/O Terminals. All dimensions are in mm.

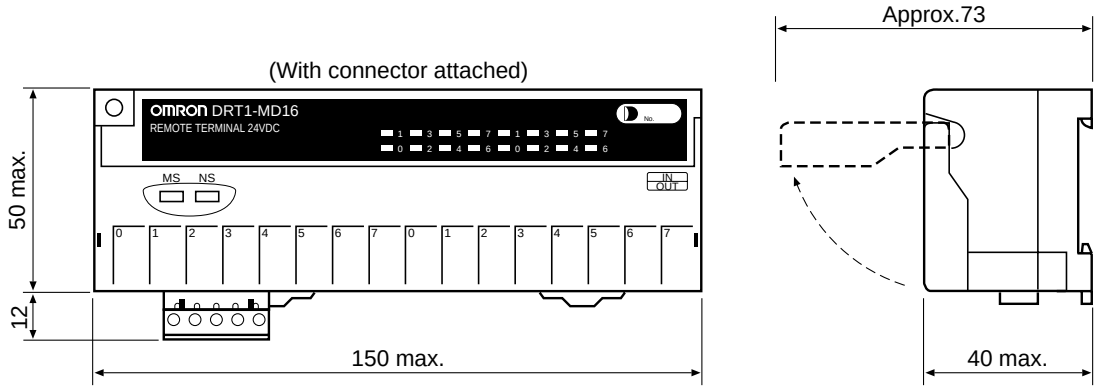

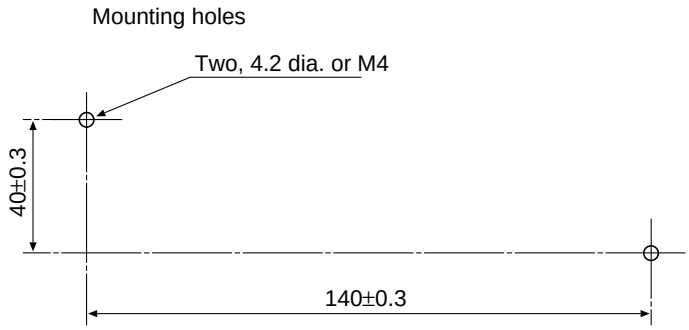

4-3-7 Mounting in Control Panels

Either of the following methods can be used to mount an Remote I/O Terminal in a control panel.

Using Screws

Open mounting holes in the control panel according to the dimensions provided for mounting holes in the dimensions diagrams and then secure the Remote I/O Terminal with M4 screws. The appropriate tightening torque is 0.6 to 0.98 N·m.

Using DIN Track

Mount the back of the Remote I/O Terminal to a 35-mm DIN Track. To mount the Terminal, pull down on the mounting hook on the back of the Terminal with a screwdriver, insert the DIN Track on the back of the Terminal, and then secure the Terminal to the DIN Track. When finished, secure all Slaves on both ends of the DIN Track with End Plates.

Connecting End Plates

Hook the bottom of the End Plate onto the DIN Track, as shown at (1) in the following diagram, then hook the top of the End Plate as shown at (2).

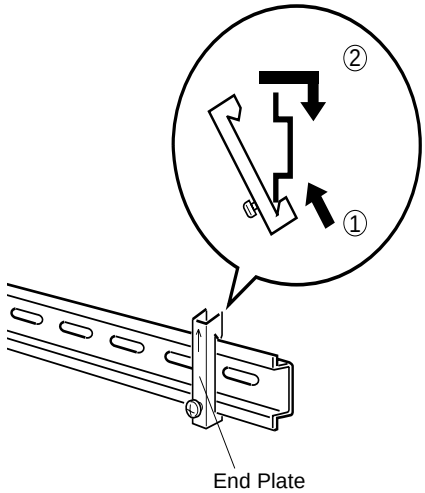

Note Always attach End Plate to both ends of Slaves connected to DIN Track.

Mounting Direction

Unless specific restrictions are given for the Slave, it can be mounted in any direction. Any of the following directions are okay.

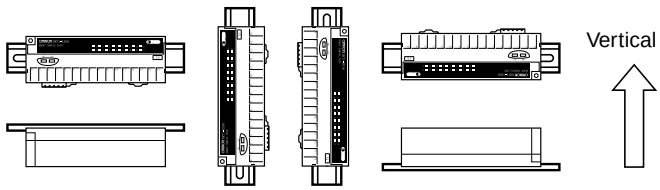

4-3-8 Wiring Internal Power Supplies, I/O Power Supplies, and I/O Lines

The internal circuit power supplies, I/O power supplies, and I/O lines are all wired to M3 screw terminals. Connect M3 crimp terminals and then connect them to the terminal block. Tighten the screws fixing the crimp terminals to a torque of 0.3 to 0.5 N·m.

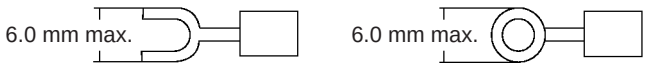

Wiring the Internal Power Supply

Refer to the wiring details for each Slave for information on the terminal arrangement at the terminal block. The following example shows the internal power supply for a DRT1-ID16 Remote Input Terminal.

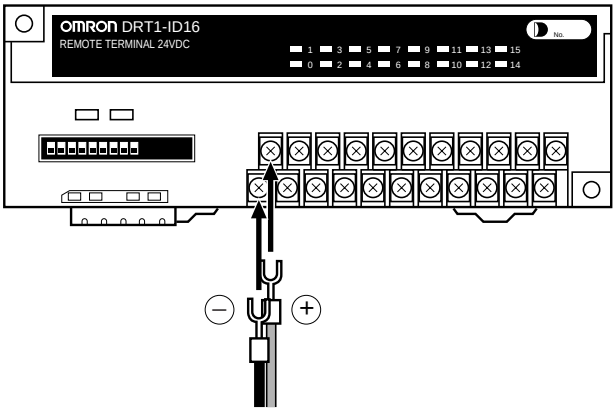

Wiring the I/O Power Supply

Refer to the wiring details for each Slave for information on the terminal arrangement at the terminal block. The following example shows the I/O power supply for a DRT1-ID16 Remote Input Terminal.

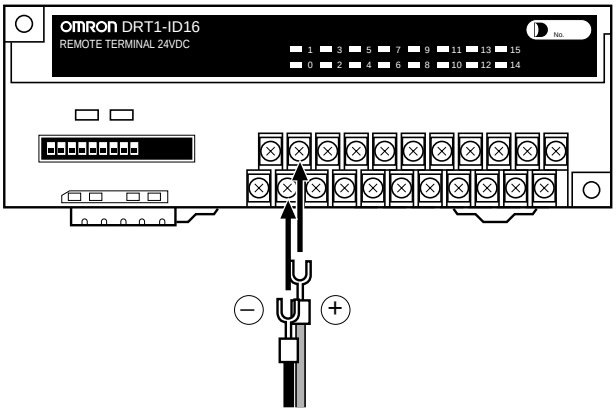

Wiring I/O

Refer to the wiring details for each Slave for information on the terminal arrangement at the terminal block and external I/O wiring. The following example shows the wiring to input 0 on a DRT1-ID16 Remote Input Terminal.

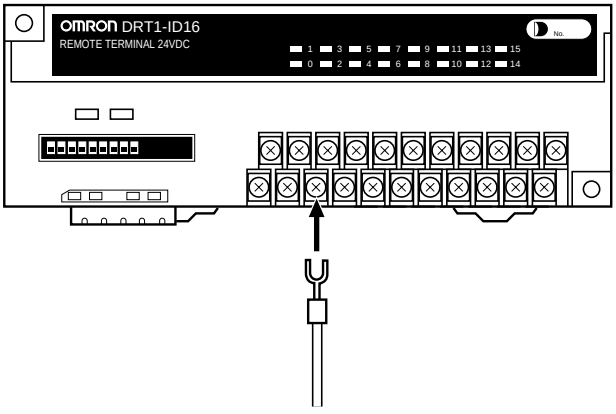

4-4 Transistor Remote I/O Terminals with 3-tier I/O Terminal Blocks

4-4-1 Node Address, Baud Rate, and Output Hold/Clear Settings

This section describes the Slaves' node address setting, baud rate settings, and hold/clear outputs for communications error setting. These settings are made using the following pins on the DIP switch.

Node address setting: Rotary switches
Baud rate setting: Pins 1 and 2
Output hold/clear setting: Pin 4 (affects only outputs)

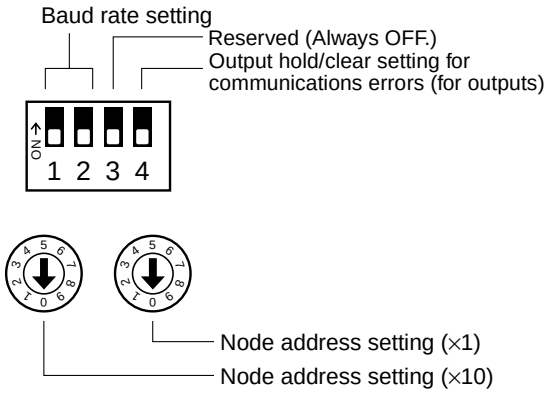

Node Address Settings

The node address of the Remote I/O Terminal is set with two rotary switches. The 10s digit is set on the left and the 1s digit is set on the right. Any node address within the setting range can be used as long as it isn't already set on another node.

Note The Slave won't be able to participate in communications if the same node address is used for the Master or another Slave node (node address duplication error).

Baud Rate Setting

Pins 1 and 2 are used to set the baud rate as shown in the following table. (These pins are factory-set to OFF.)

Pin 1	Pin 2	Baud rate
OFF	OFF	125 kbps (default)
ON	OFF	250 kbps
OFF	ON	500 kbps
ON	ON	Not allowed.

Note

1. Always turn OFF the Slave's power supply (including the communications power supply) before changing the baud rate setting.
2. Set the same baud rate on all of the nodes (Master and Slaves) in the Network. Any Slaves with baud rates different from the Master's rate won't be able to participate in communications. Furthermore, a node with an incorrect baud rate may cause communications errors between nodes with correct baud rate settings.

Setting Pins 3 and 4

The functions of pins 3 and 4 differ for inputs and outputs, as shown in the following diagram.

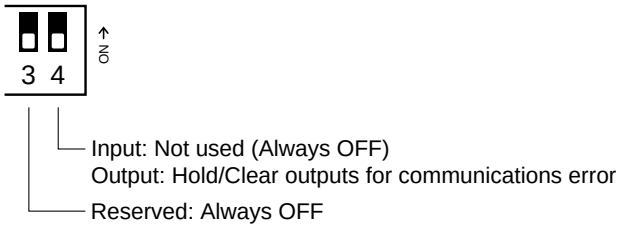

Pin 3: Reserved (Always OFF)

Pin 4: As follows:

Inputs:	No function (Always OFF)
Outputs:	Hold/Clear outputs for communications error
OFF (Clear):	All output data from the Master will be cleared to 0 when a communications error occurs.
ON (Hold):	All output data from the Master will be retained when a communications error occurs.

Pins 3 and 4 are factory-set to OFF.

4-4-2 Transistor Remote Input Terminals with 16 Points and 3-tier I/O Terminal Blocks: DRT1-ID16T (NPN) and DRT1-ID16T-1 (PNP)

Input Specifications

Item	Specification	
Model	DRT1-ID16T	DRT1-ID16T-1
Internal I/O common	NPN	PNP
Input points	16 points	
ON voltage	15 V DC min. (between each input terminal and V)	15 V DC min. (between each input terminal and G)
OFF voltage	5 V DC max. (between each input terminal and V)	5 V DC max. (between each input terminal and G)
OFF current	1.0 mA max.	
Input current	6.0 mA max./point at 24 V DC 3.0 mA min./point at 17 V DC	
ON delay time	1.5 ms max.	
OFF delay time	1.5 ms max.	
Number of circuits	8 points with two commons	

Components of the DRT1-ID16T and DRT1-ID16T-1

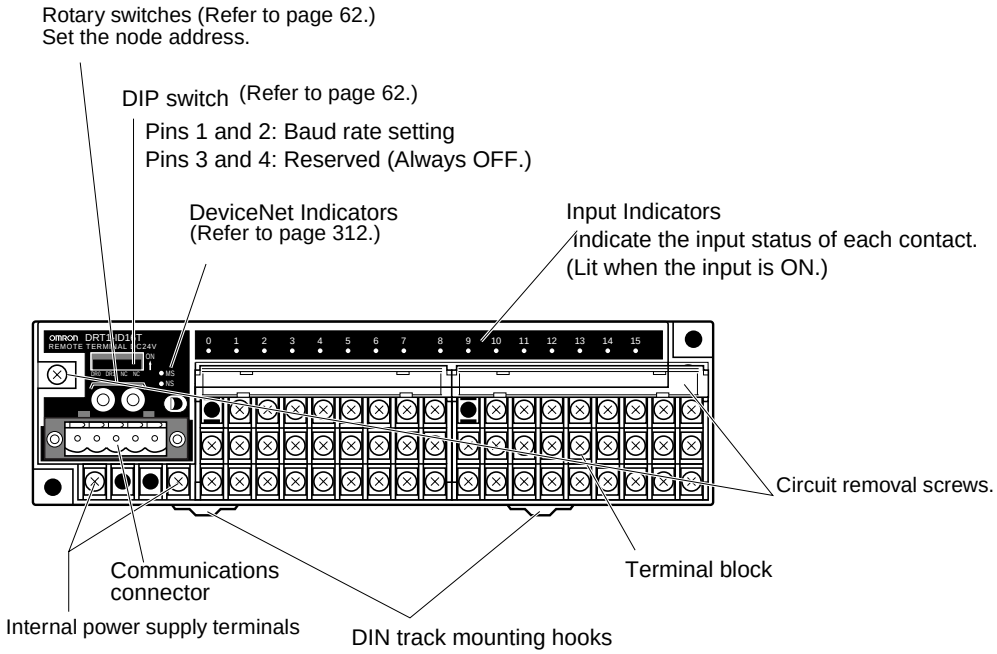

Internal Circuits

The following diagram shows the internal circuits for the DRT1-ID16T Remote Input Terminal.

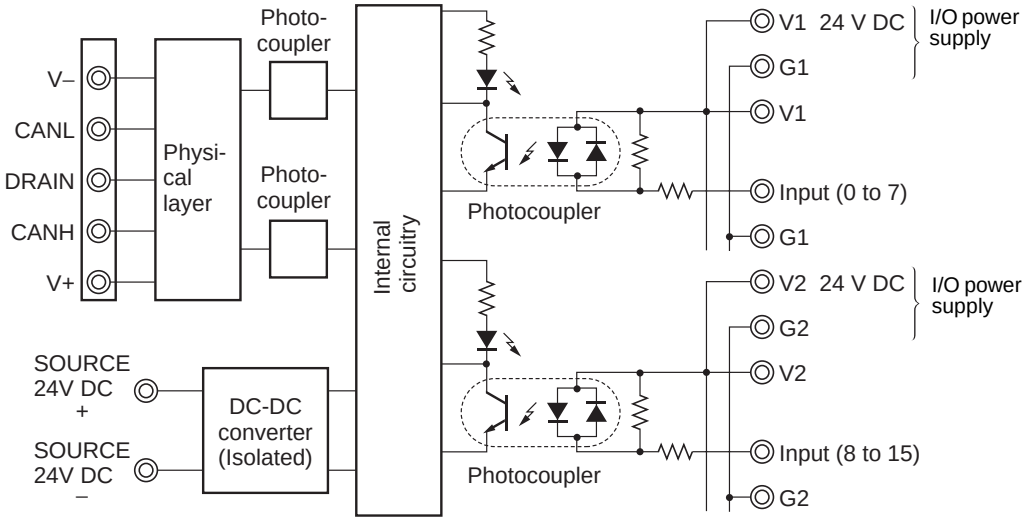

The following diagram shows the internal circuits for the DRT1-ID16T-1 Remote Input Terminal.

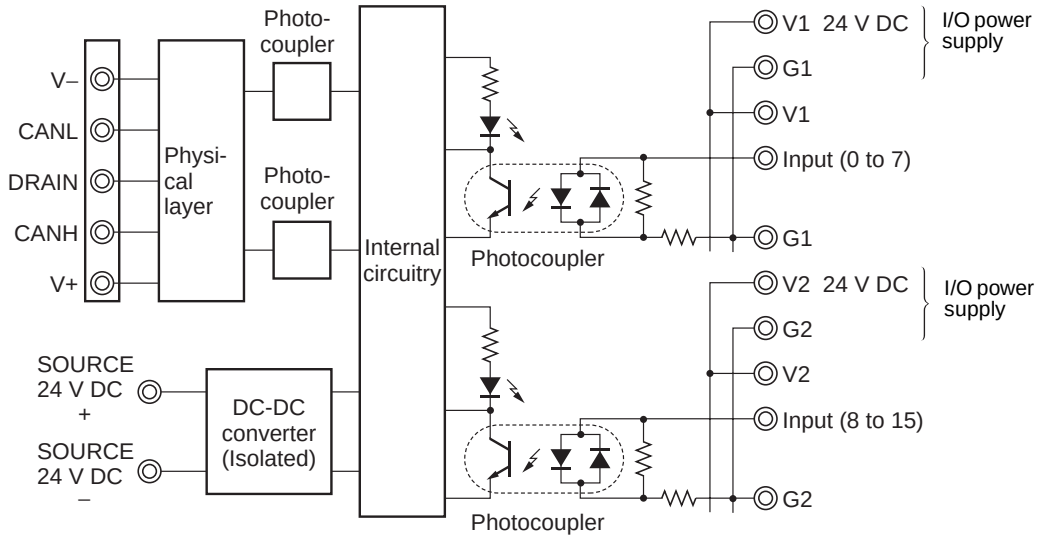

Wiring

The following diagram shows the wiring of the DRT1-ID16T Remote Input Terminal.

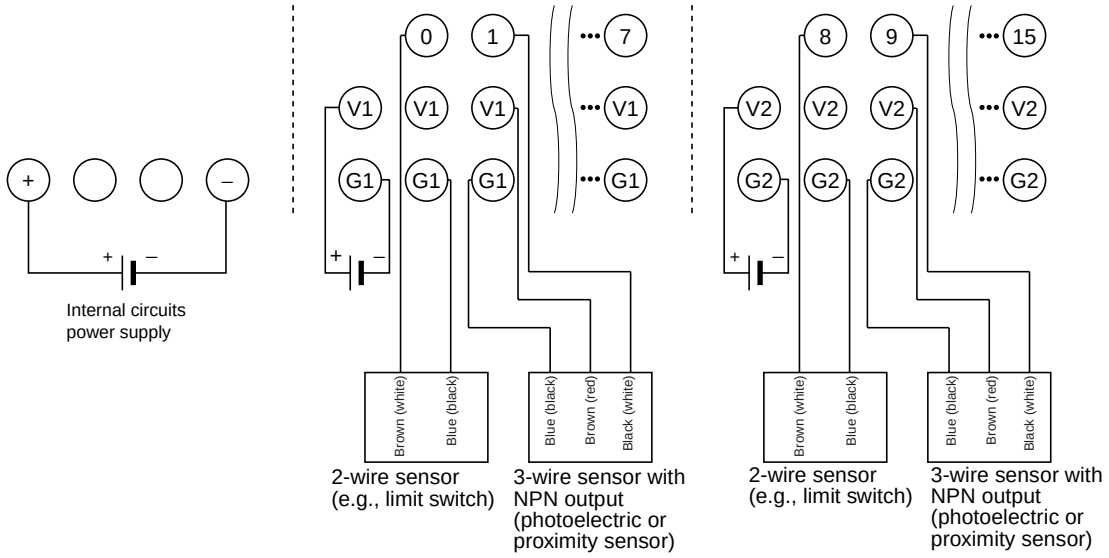

The following diagram shows the wiring of the DRT1-ID16T-1 Remote Input Terminal.

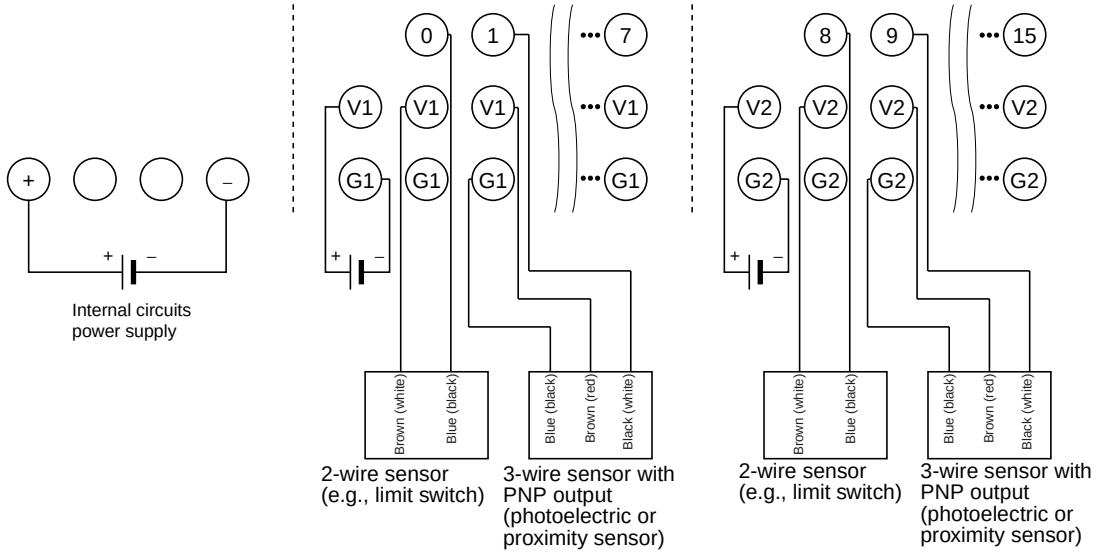

Note 1. V1 is not connected internally to V2, and G1 is not connected internally to G2. Connect them carefully.

2. Line colors have been changed accompanying changes in JIS standards for photoelectric and proximity sensors. Previous colors are given in parentheses.

Dimensions

The following diagram shows the dimensions for the DRT1-ID16T and DRT1-ID16T-1 Remote Input Terminals. All dimensions are in mm.

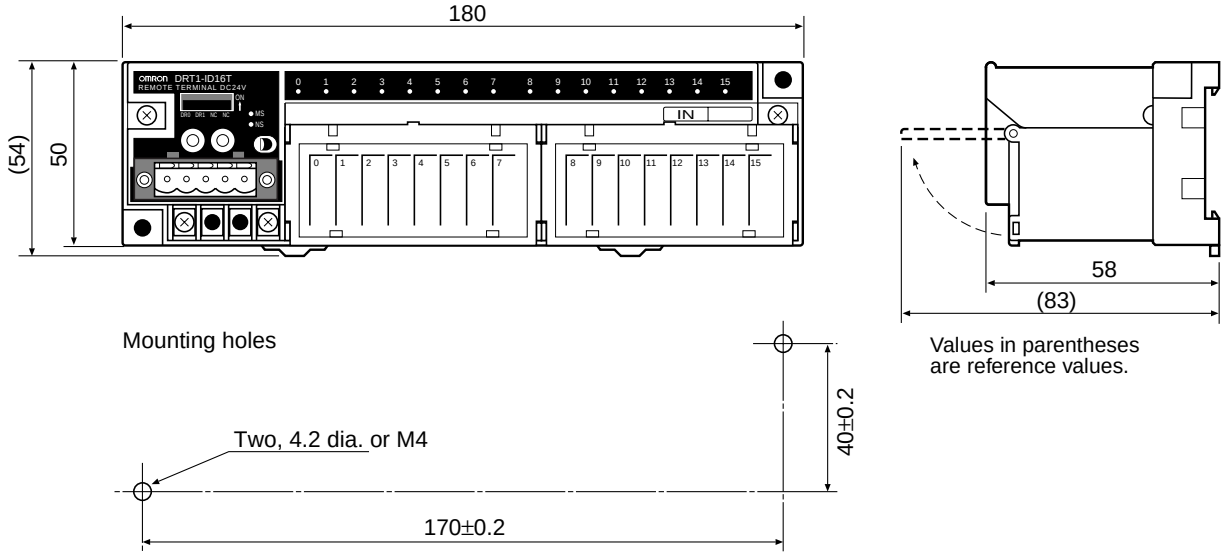

Note The circuit section can be removed by loosening the circuit removal screws. (Refer to *Components of the DRT1-ID16T and DRT1-ID16T-1.*)

Always turn OFF the communications, internal, and I/O power supplies before removing or attaching the circuit section.

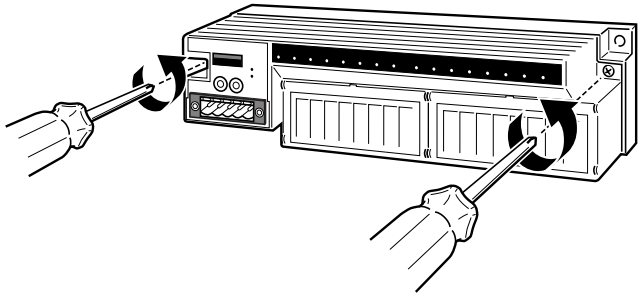

4-4-3 Transistor Remote Input Terminals with 16 Points and 3-tier I/O Terminal Blocks: DRT1-ID16TA (NPN) and DRT1-ID16TA-1 (PNP)

Input Specifications

Item	Specification	
Model	DRT1-ID16TA	DRT1-ID16TA-1
Internal I/O common	NPN	PNP
Input points	16 points	
ON voltage	15 V DC min. (between each input terminal and V)	15 V DC min. (between each input terminal and G)
OFF voltage	5 V DC max. (between each input terminal and V)	5 V DC max. (between each input terminal and G)
OFF current	1.0 mA max.	
Input current	6.0 mA max./point at 24 V DC 3.0 mA min./point at 17 V DC	
ON delay time	1.5 ms max.	
OFF delay time	1.5 ms max.	
Number of circuits	8 points with two commons	

Components of the DRT1-ID16TA and DRT1-ID16TA-1

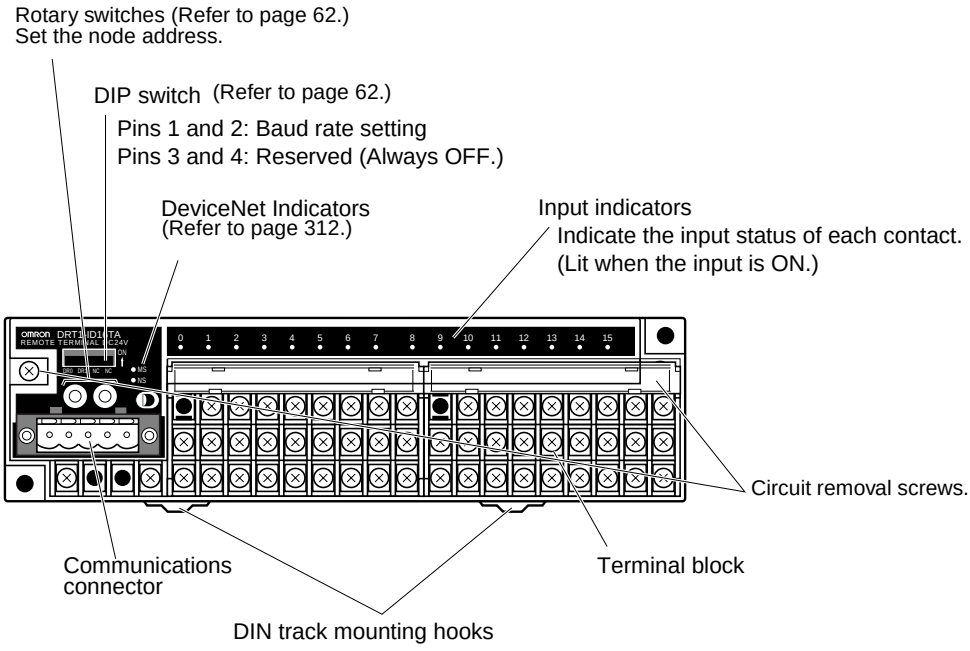

Internal Circuits

The following diagram shows the internal circuits for the DRT1-ID16TA Remote Input Terminal.

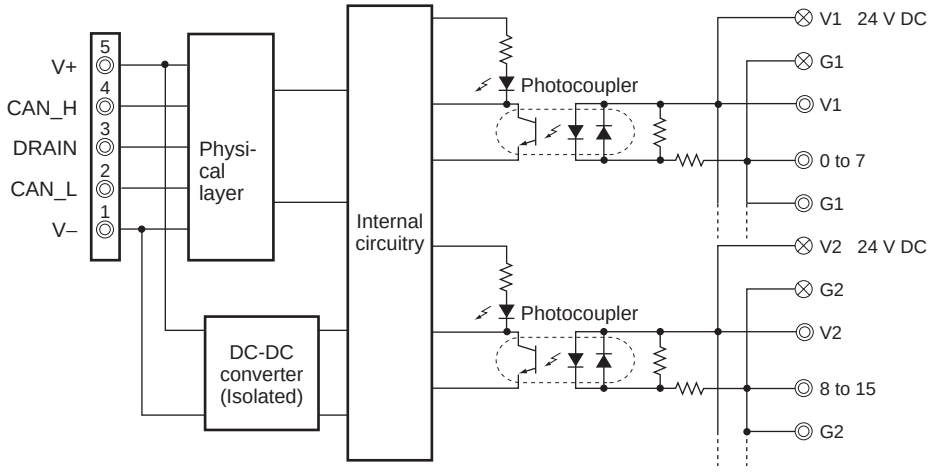

The following diagram shows the internal circuits for the DRT1-ID16TA-1 Remote Input Terminal.

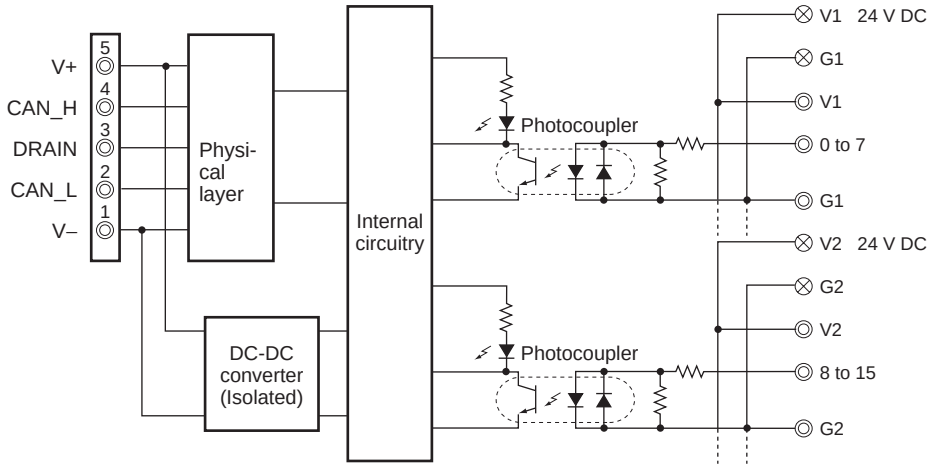

Wiring

The following diagram shows the wiring of the DRT1-ID16TA Remote Input Terminal.

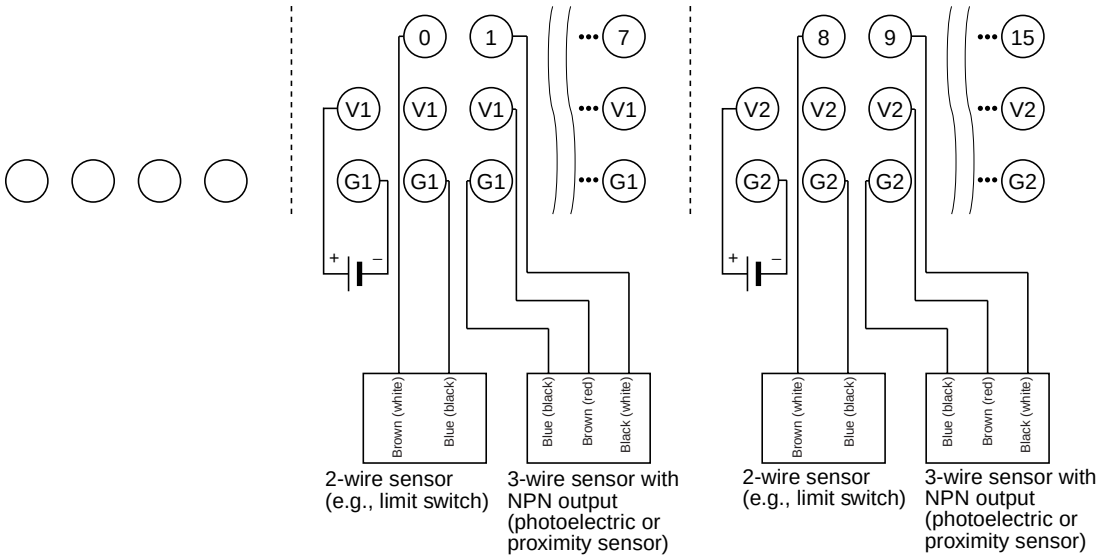

The following diagram shows the wiring of the DRT1-ID16TA-1 Remote Input Terminal.

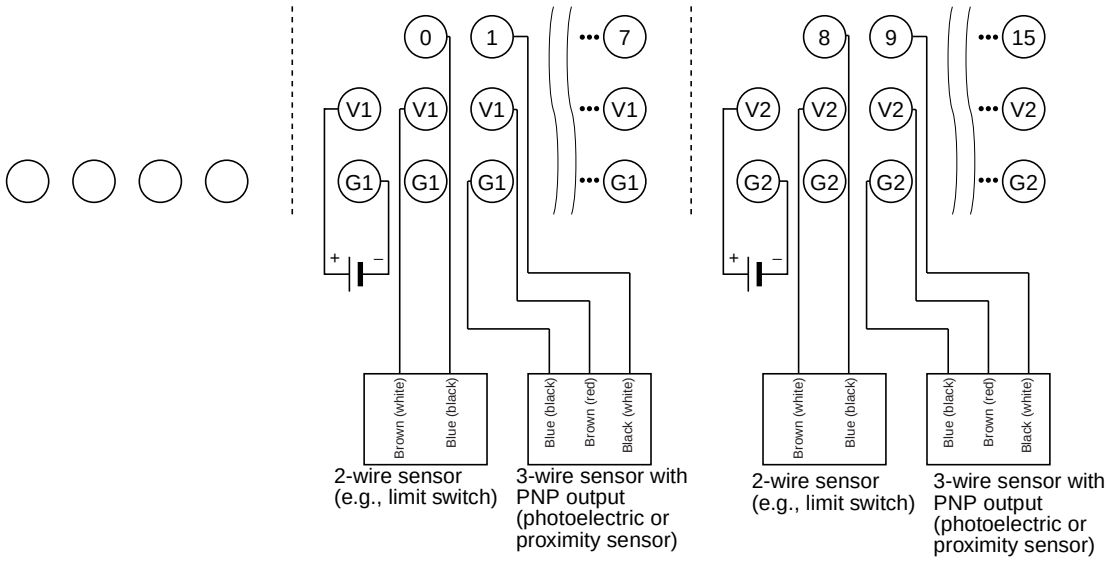

Note 1. V1 is not connected internally to V2, and G1 is not connected internally to G2. Connect them carefully.

2. Line colors have been changed accompanying changes in JIS standards for photoelectric and proximity sensors. Previous colors are given in parentheses.

Dimensions

The following diagram shows the dimensions for the DRT1-ID16TA and DRT1-ID16TA-1 Remote Input Terminals. All dimensions are in mm.

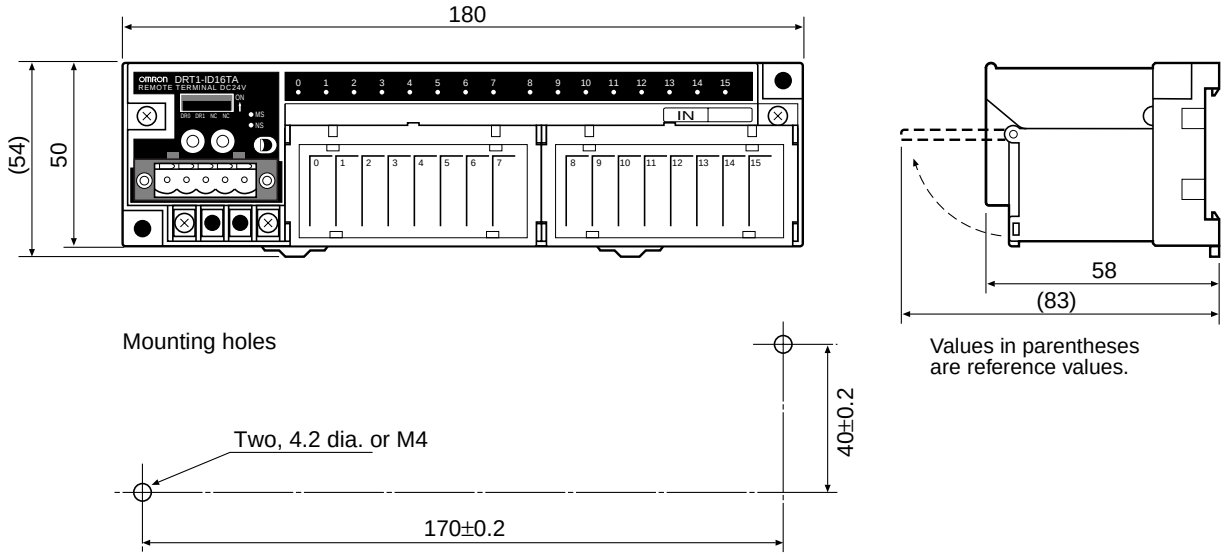

Note The circuit section can be removed by loosening the circuit removal screws. (Refer to *Components of the DRT1-ID16TA and DRT1-ID16TA-1.*)

Always turn OFF the communications, internal, and I/O power supplies before removing or attaching the circuit section.

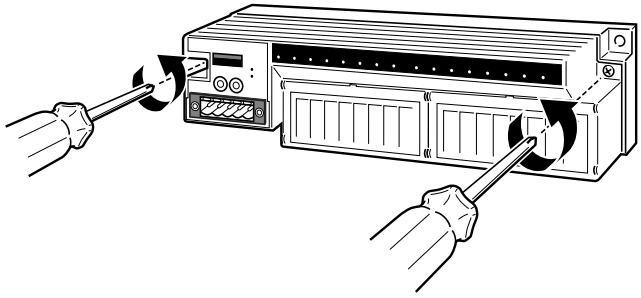

4-4-4 Transistor Remote Output Terminals with 16 Points and 3-tier I/O Terminal Blocks: DRT1-OD16T (NPN) and DRT1-OD16T-1 (PNP)

Output Specifications

Item	Specification	
Model	DRT1-OD16T	DRT1-OD16T-1
Internal I/O common	NPN	PNP
Output points	16 points	
Rated output current	0.5 A/point	
Residual voltage	1.2 V max. (at 0.5 A, between each output terminal and G)	1.2 V max. (at 0.5 A, between each output terminal and V)
Leakage current	0.1 mA max.	
ON delay time	0.5 ms max.	
OFF delay time	1.5 ms max.	
Number of circuits	8 points with two commons	

Components of the DRT1-OD16T and DRT1-OD16T-1

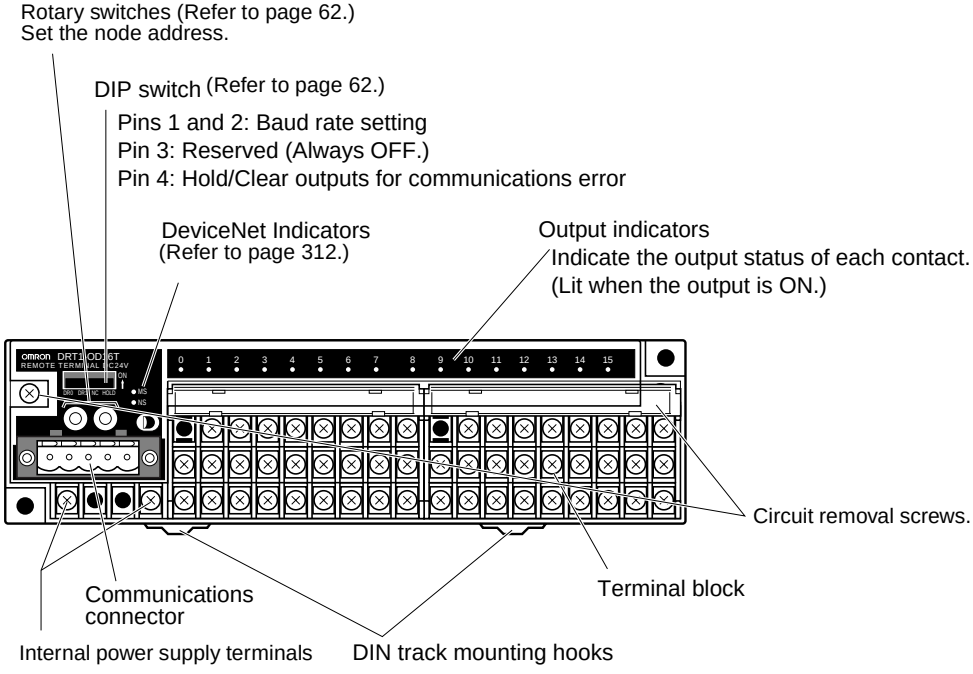

Internal Circuits

The following diagram shows the internal circuits for the DRT1-OD16T Remote Output Terminal.

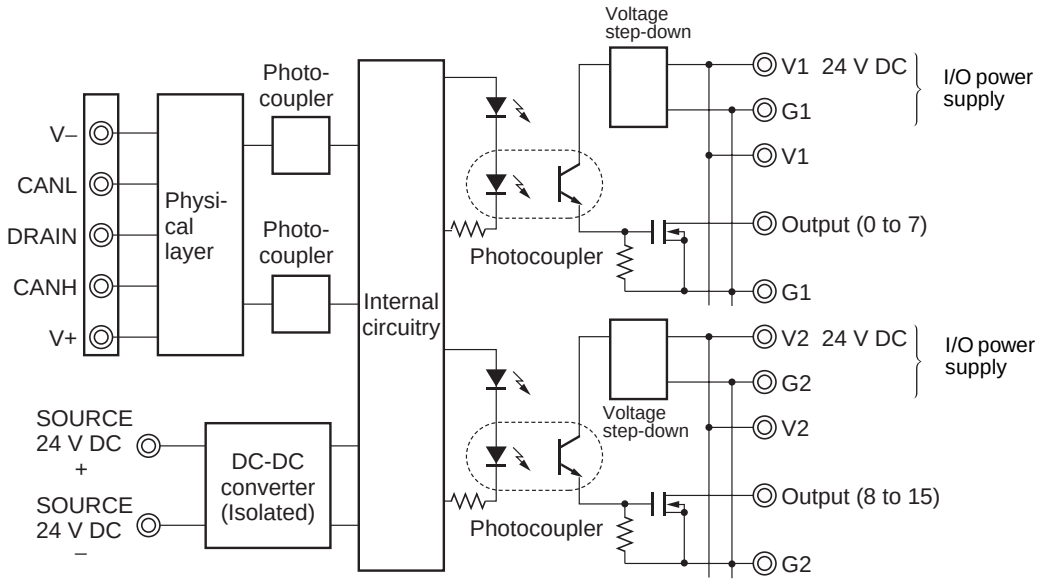

The following diagram shows the internal circuits for the DRT1-OD16T-1 Remote Output Terminal.

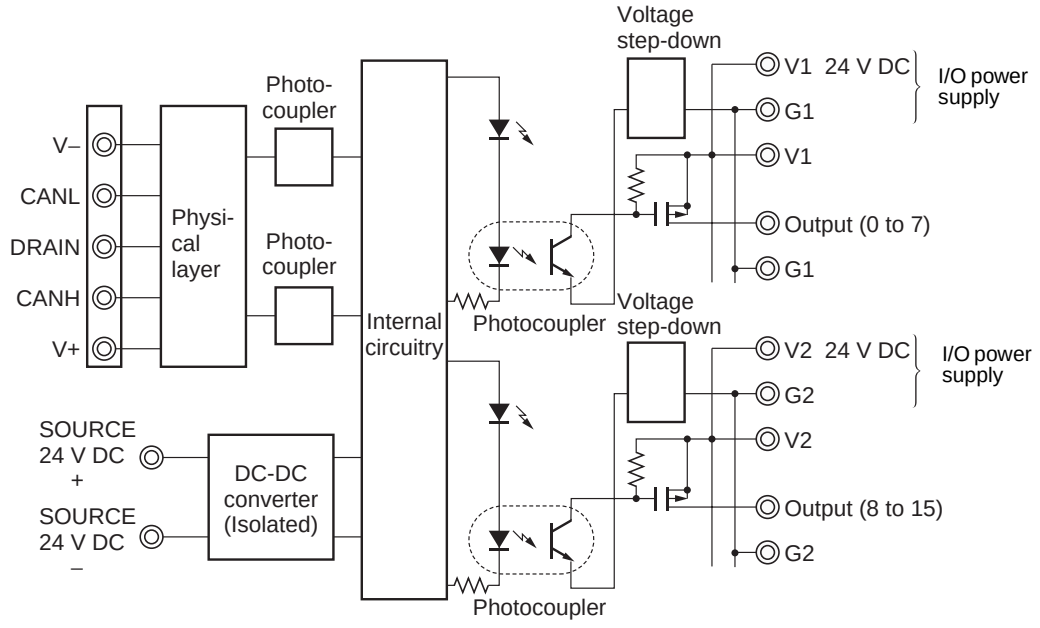

Wiring

The following diagram shows the wiring of the DRT1-OD16T Remote Output Terminal.

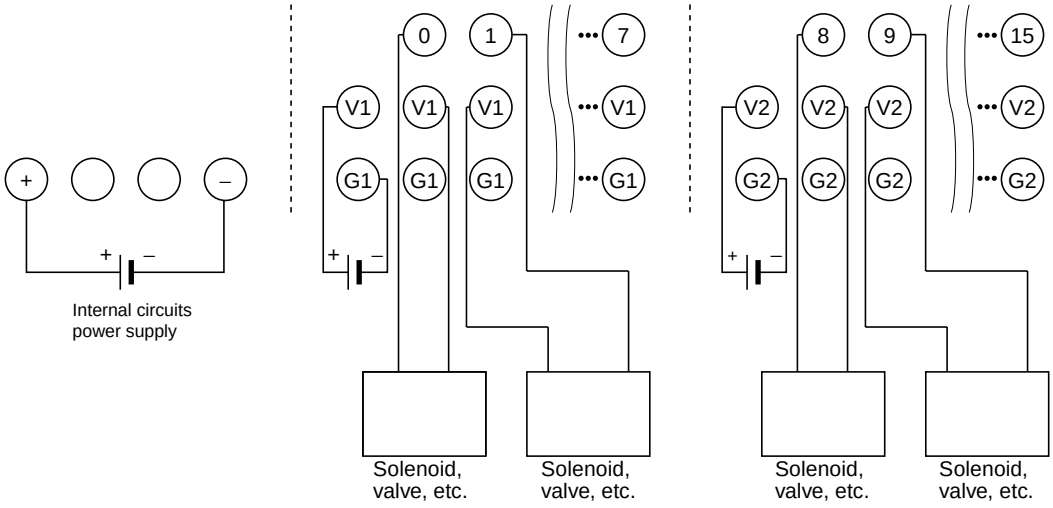

The following diagram shows the wiring of the DRT1-OD16T-1 Remote Output Terminal.

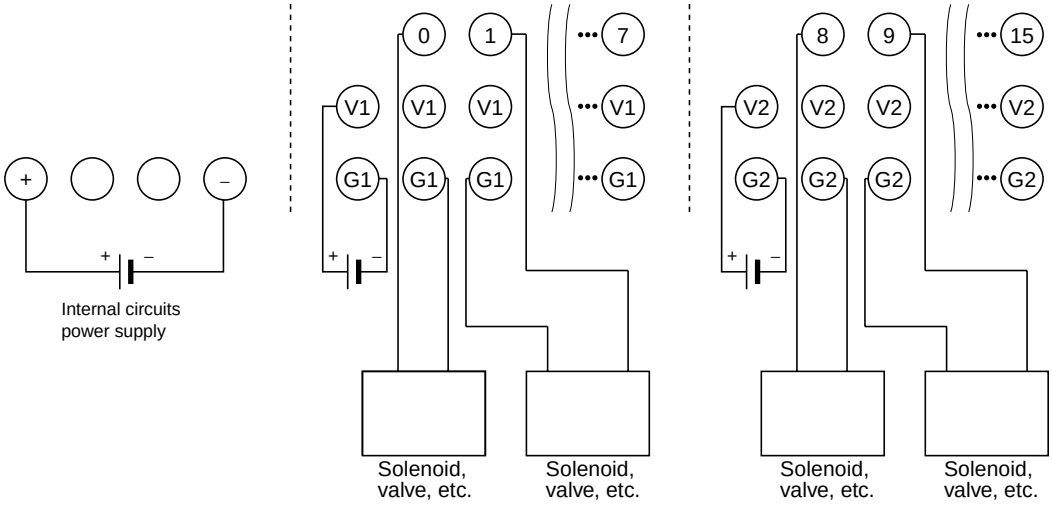

Note

1. V1 is not connected internally to V2, and G1 is not connected internally to G2. Connect them carefully
2. When using inductive loads (such as solenoids or valves), use a load with a built-in diode to absorb reverse power or attach a diode externally.

Dimensions

The following diagram shows the dimensions for the DRT1-OD16T and DRT1-OD16T-1 Remote Output Terminals. All dimensions are in mm.

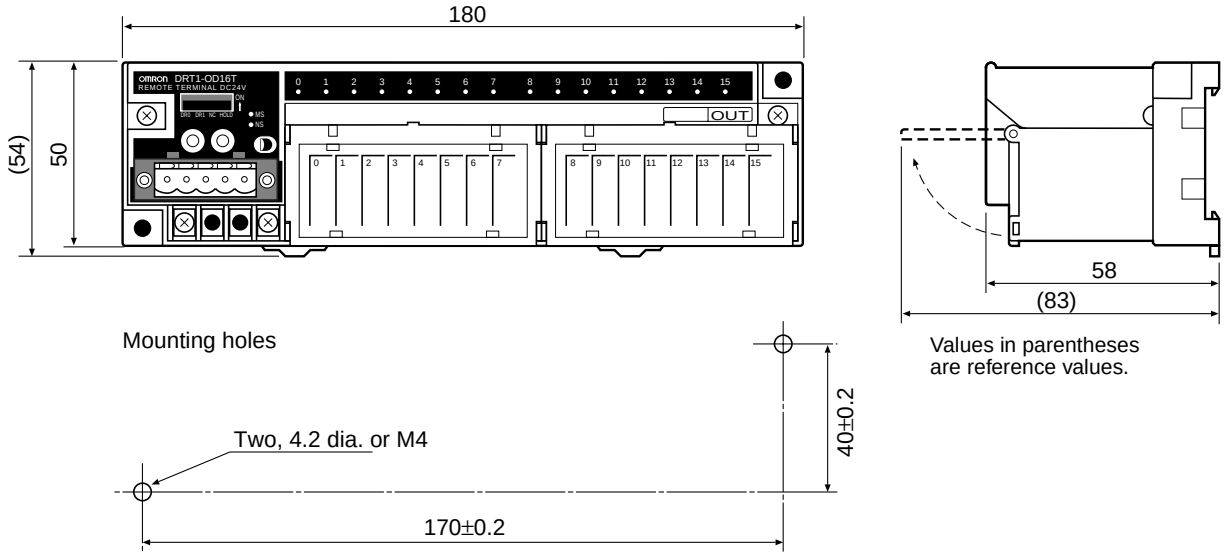

Note The circuit section can be removed by loosening the circuit removal screws. (Refer to *Components of the DRT1-OD16T and DRT1-OD16T-1.*)
Always turn OFF the communications, internal, and I/O power supplies before removing or attaching the circuit section.

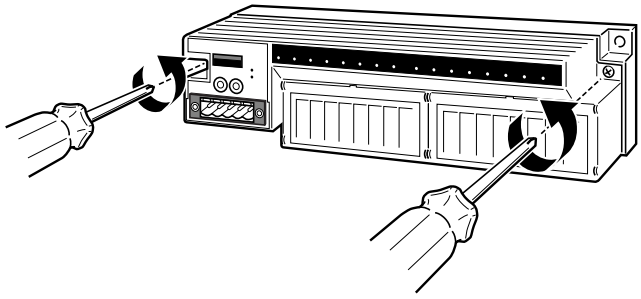

4-4-5 Transistor Remote Output Terminals with 16 Points and 3-tier I/O Terminal Blocks: DRT1-OD16TA (NPN) and DRT1-OD16TA-1 (PNP)

Output Specifications

Item	Specification	
Model	DRT1-OD16TA	DRT1-OD16TA-1
Internal I/O common	NPN	PNP
Output points	16 points	
Rated output current	0.5 A/point	
Residual voltage	1.2 V max. (at 0.5 A, between each output terminal and G)	1.2 V max. (at 0.5 A, between each output terminal and V)
Leakage current	0.1 mA max.	
ON delay time	0.5 ms max.	
OFF delay time	1.5 ms max.	
Number of circuits	8 points	

Components of the DRT1-OD16TA and DRT1-OD16TA-1

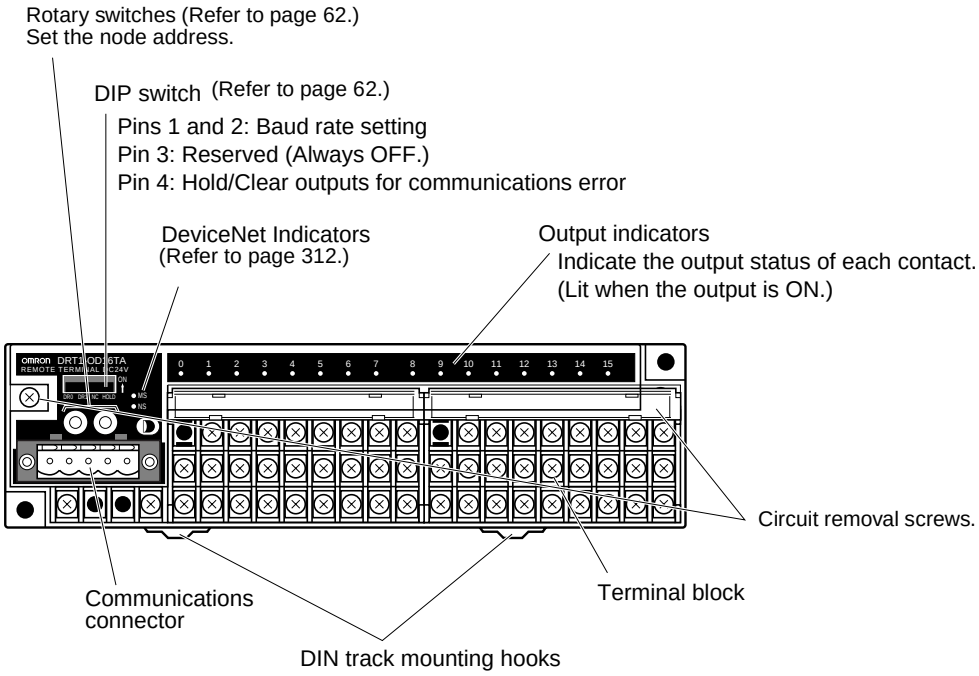

Internal Circuits

The following diagram shows the internal circuits for the DRT1-OD16TA Remote Output Terminal.

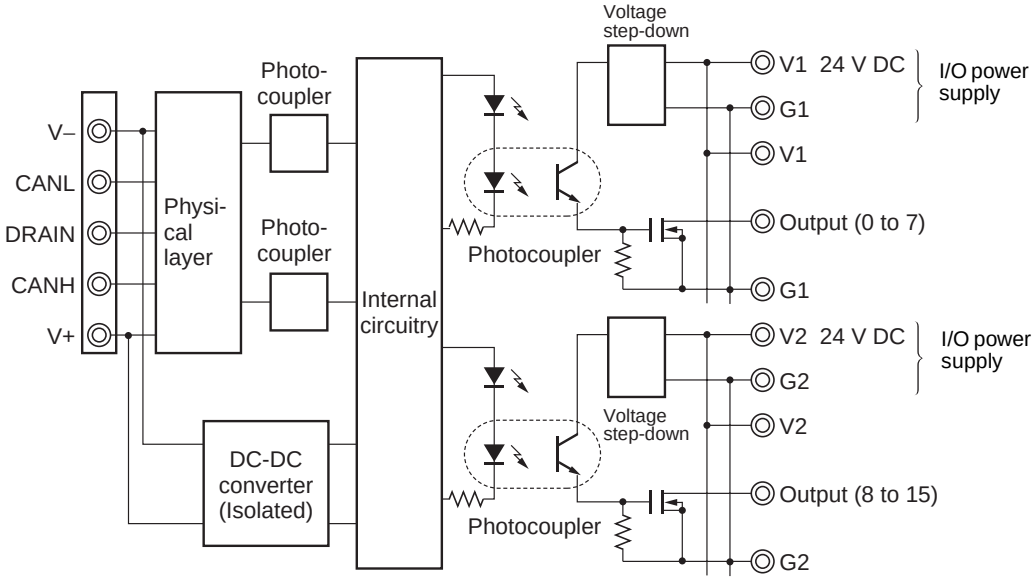

The following diagram shows the internal circuits for the DRT1-OD16TA-1 Remote Output Terminal.

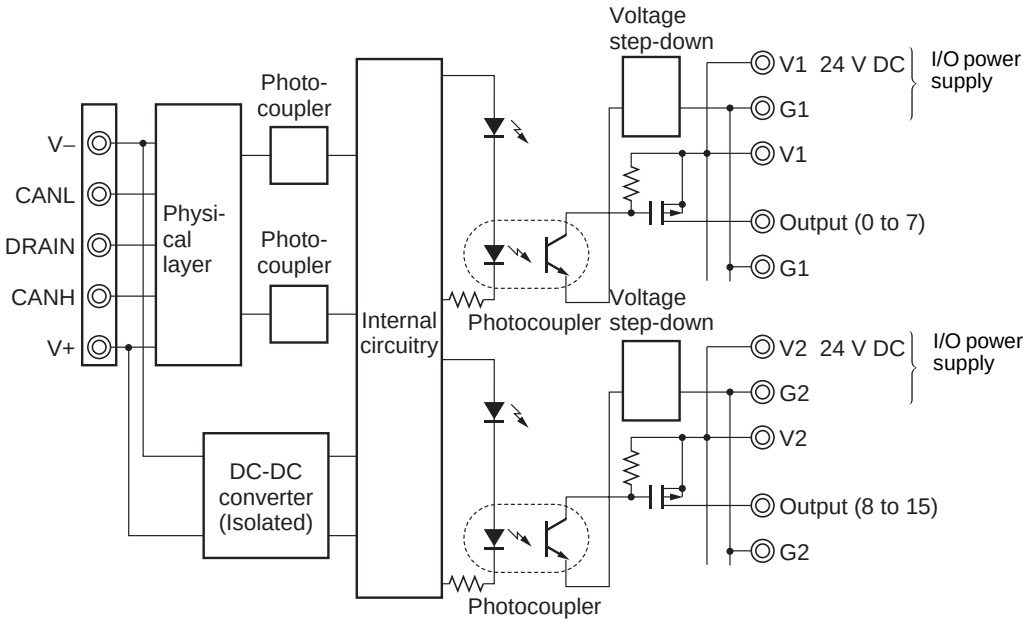

Wiring

The following diagram shows the wiring of the DRT1-OD16TA Remote Output Terminal.

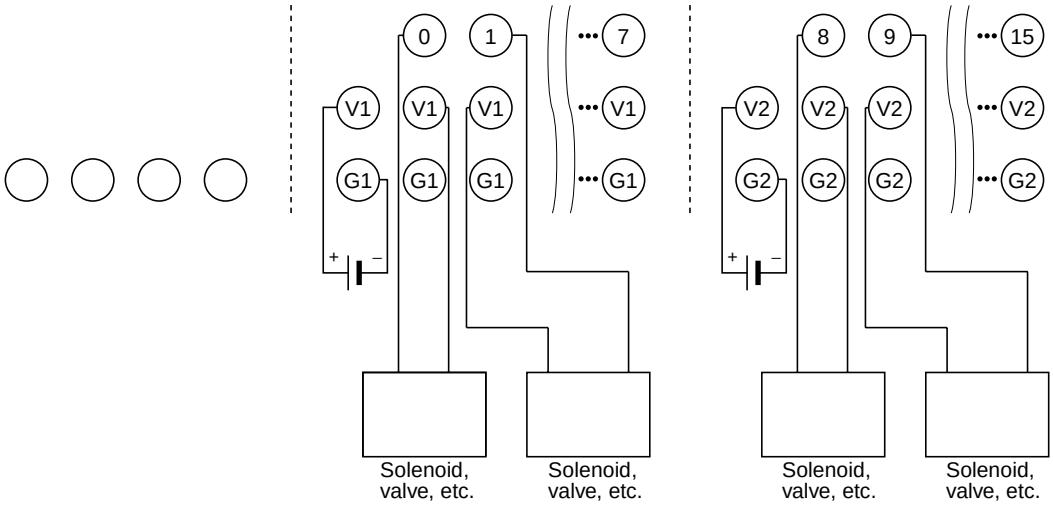

The following diagram shows the wiring of the DRT1-OD16TA-1 Remote Output Terminal.

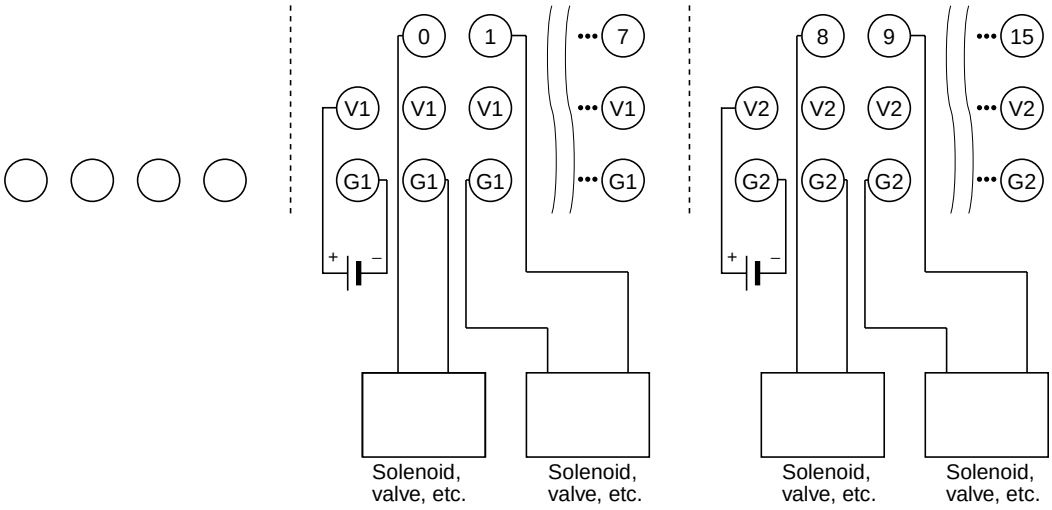

Note 1. V1 is not connected internally to V2, and G1 is not connected internally to G2. Connect them carefully.

2. When using inductive loads (such as solenoids or valves), use a load with a built-in diode to absorb reverse power or attach a diode externally.

Dimensions

The following diagram shows the dimensions for the DRT1-OD16T and DRT1-OD16TA-1 Remote Output Terminals. All dimensions are in mm.

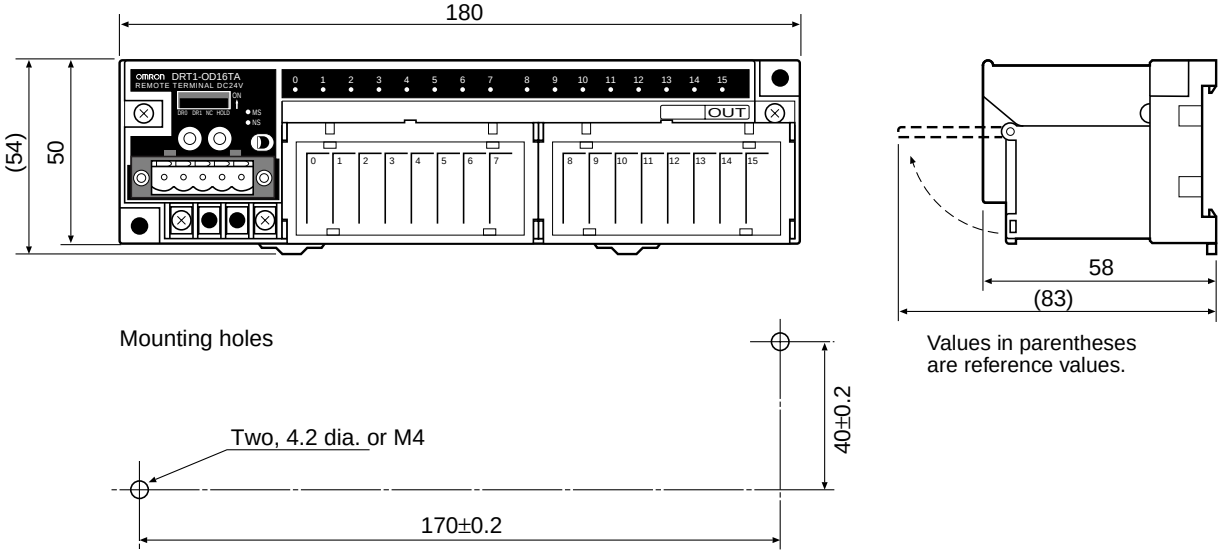

Note The circuit section can be removed by loosening the circuit removal screws. (Refer to *Components of the DRT1-OD16TA and DRT1-OD16TA-1.*)

Always turn OFF the communications, internal, and I/O power supplies before removing or attaching the circuit section.

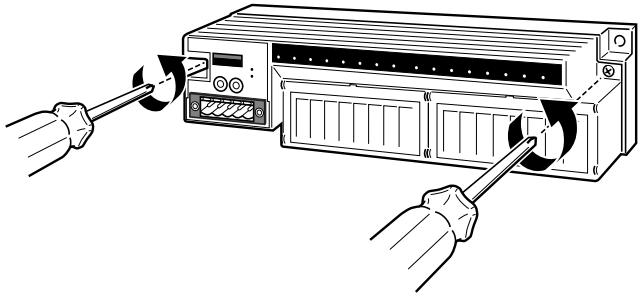

4-4-6 Transistor Remote I/O Terminals with 8 Inputs and 8 Outputs and 3-tier I/O Terminal Blocks: DRT1-MD16T (NPN) and DRT1-MD16T-1 (PNP)

Input Specifications

Item	Specification	
Model	DRT1-MD16T	DRT1-MD16T-1
Internal I/O common	NPN	PNP
Input points	8 points	
ON voltage	15 V DC min. (between each input terminal and V)	15 V DC min. (between each input terminal and G)
OFF voltage	5 V DC max. (between each input terminal and V)	5 V DC max. (between each input terminal and G)
OFF current	1 mA max.	
Input current	6.0 mA max./point at 24 V DC 3.0 mA min./point at 17 V DC	
ON delay time	1.5 ms max.	
OFF delay time	1.5 ms max.	
Number of circuits	8 points with one common	

Output Specifications

Item	Specification	
Model	DRT1-MD16T	DRT1-MD16T-1
Internal I/O common	NPN	PNP
Output points	8 points	
Rated output current	0.5 A/point	
Residual voltage	1.2 V max. (at 0.5 A, between each output terminal and G)	1.2 V max. (at 0.5 A, between each output terminal and V)
Leakage current	0.1 mA max.	
ON delay time	0.5 ms max.	
OFF delay time	1.5 ms max.	
Number of circuits	8 points with one common	

Components of the DRT1-MD16T and DRT1-MD16T-1

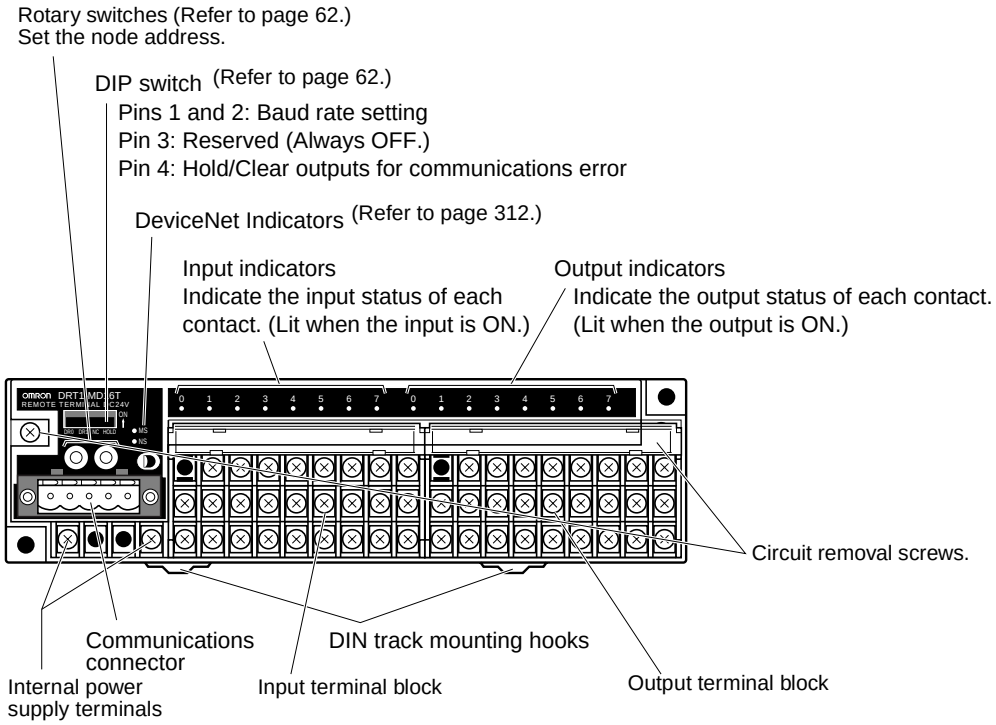

Internal Circuit

The following diagram shows the internal circuits for the DRT1-MD16T Remote I/O Terminal.

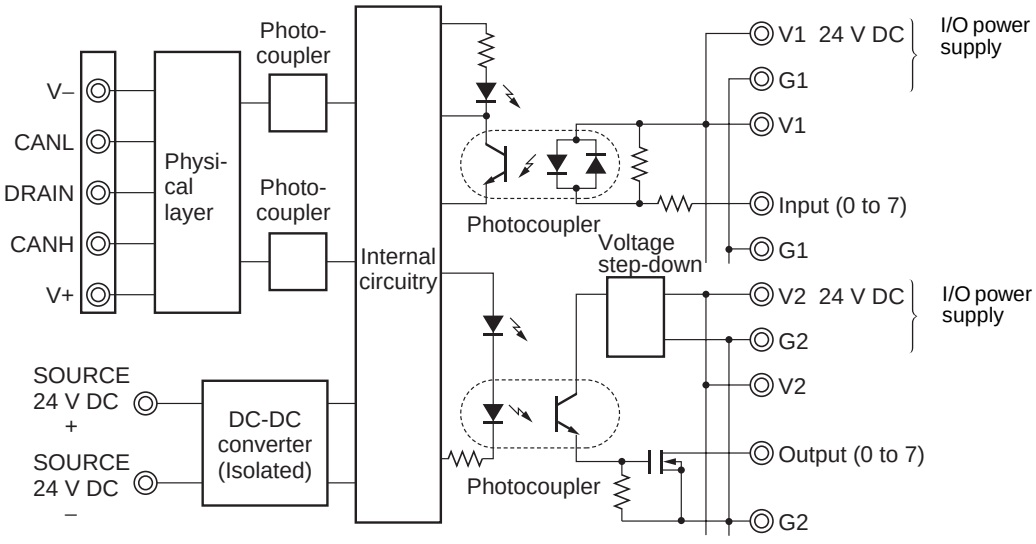

The following diagram shows the internal circuits for the DRT1-MD16T-1 Remote I/O Terminal.

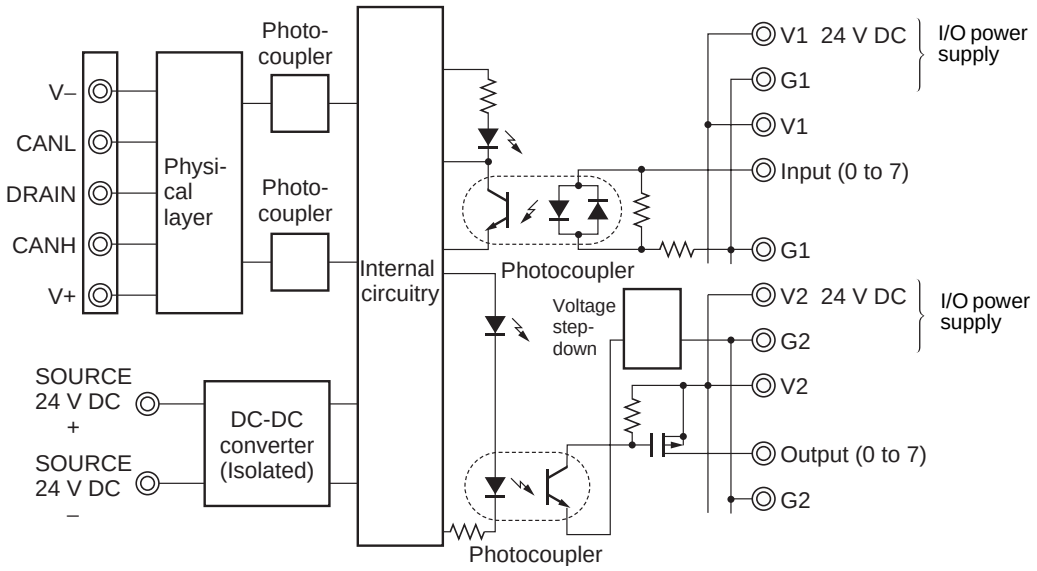

Wiring

The following diagram shows the wiring of the DRT1-MD16T Remote I/O Terminal.

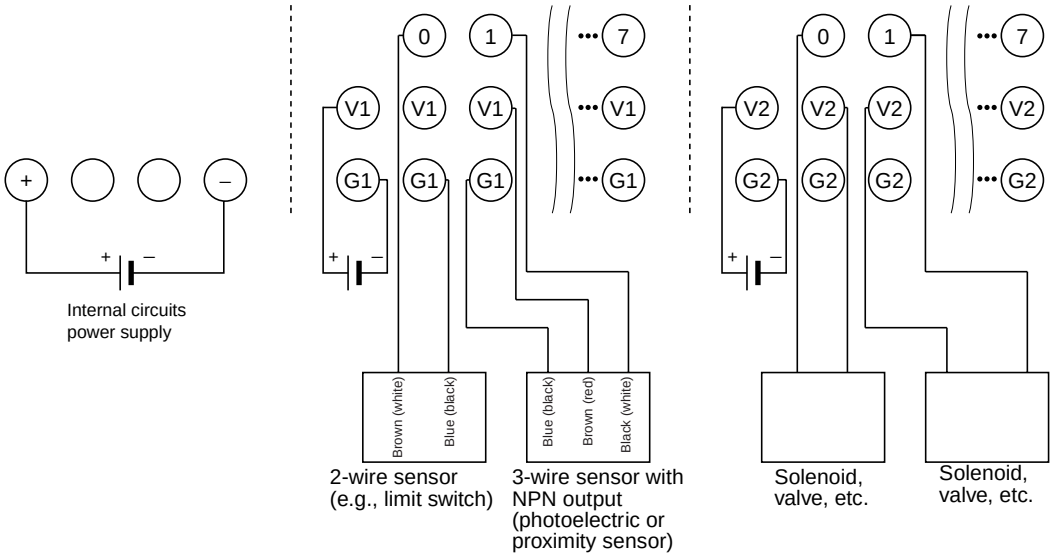

The following diagram shows the wiring of the DRT1-MD16T-1 Remote I/O Terminal.

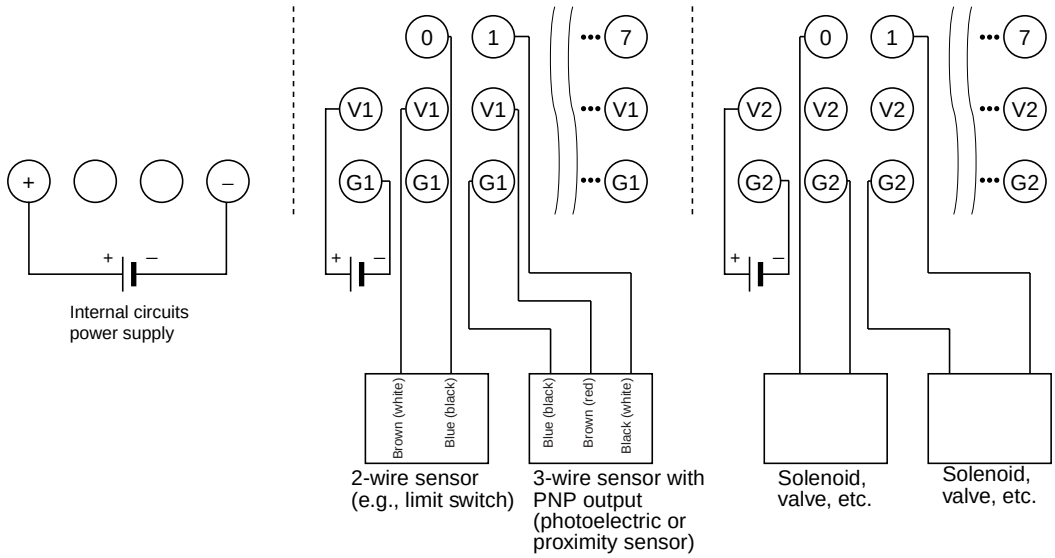

Note

1. V1 is not connected internally to V2, and G1 is not connected internally to G2. Connect them carefully
2. When using inductive loads (such as solenoids or valves), use a load with a built-in diode to absorb reverse power or attach a diode externally.
3. Line colors have been changed accompanying changes in JIS standards for photoelectric and proximity sensors. Previous colors are given in parentheses.

Dimensions

The following diagram shows the dimensions for the DRT1-MD16T and DRT1-MD16T-1 Remote I/O Terminals. All dimensions are in mm.

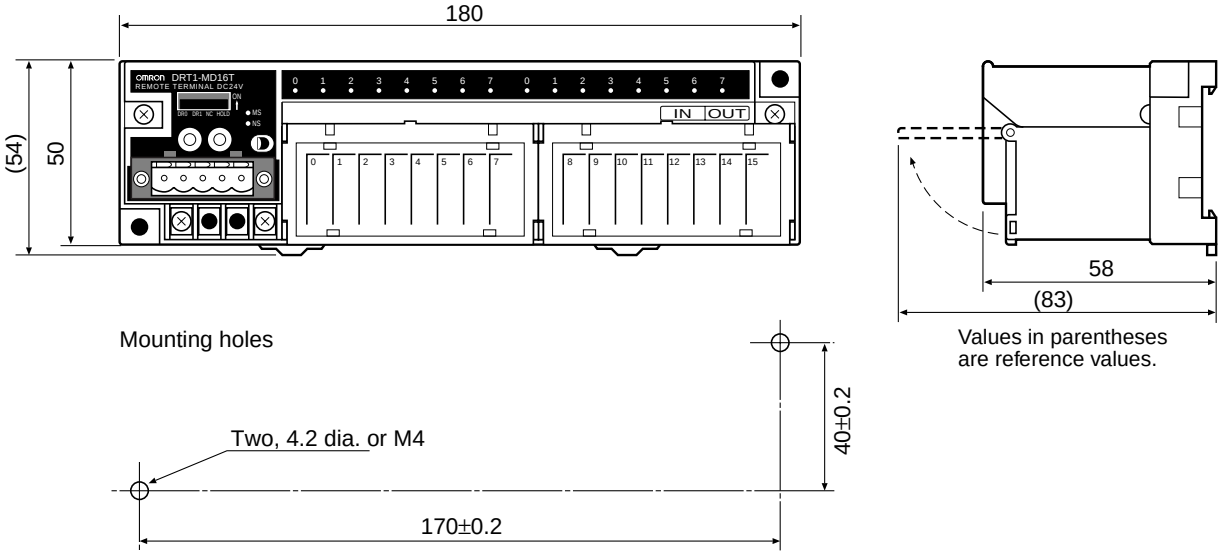

Note The circuit section can be removed by loosening the circuit removal screws. (Refer to *Components of the DRT1-MD16T and DRT1-MD16T-1.*)

Always turn OFF the communications, internal, and I/O power supplies before removing or attaching the circuit section.

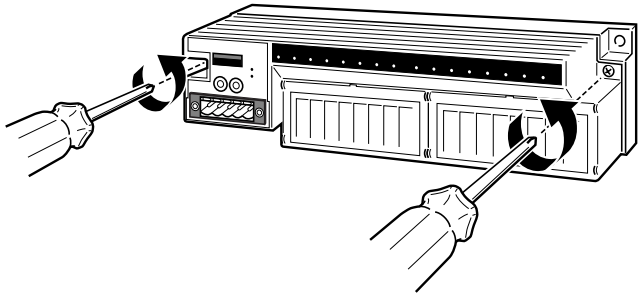

4-4-7 Transistor Remote I/O Terminals with 8 Inputs and 8 Outputs and 3-tier I/O Terminal Blocks: DRT1-MD16TA (NPN) and DRT1-MD16TA-1 (PNP)

Input Specifications

Item	Specification	
Model	DRT1-MD16TA	DRT1-MD16TA-1
Internal I/O common	NPN	PNP
Input points	8 points	
ON voltage	15 V DC min. (between each input terminal and V)	15 V DC min. (between each input terminal and G)
OFF voltage	5 V DC max. (between each input terminal and V)	5 V DC max. (between each input terminal and G)
OFF current	1.0 mA max.	
Input current	6.0 mA max./point at 24 V DC 3.0 mA min./point at 17 V DC	
ON delay time	1.5 ms max.	
OFF delay time	1.5 ms max.	
Number of circuits	8 points with one common	

Output Specifications

Item	Specification	
Model	DRT1-MD16TA	DRT1-MD16TA-1
Internal I/O common	NPN	PNP
Output points	8 points	
Rated output current	0.5 A/point	
Residual voltage	1.2 V max. (at 0.5 A, between each output terminal and G)	1.2 V max. (at 0.5 A, between each output terminal and V)
Leakage current	0.1 mA max.	
ON delay time	0.5 ms max.	
OFF delay time	1.5 ms max.	
Number of circuits	8 points with one common	

Components of the DRT1-MD16TA and DRT1-MD16TA-1

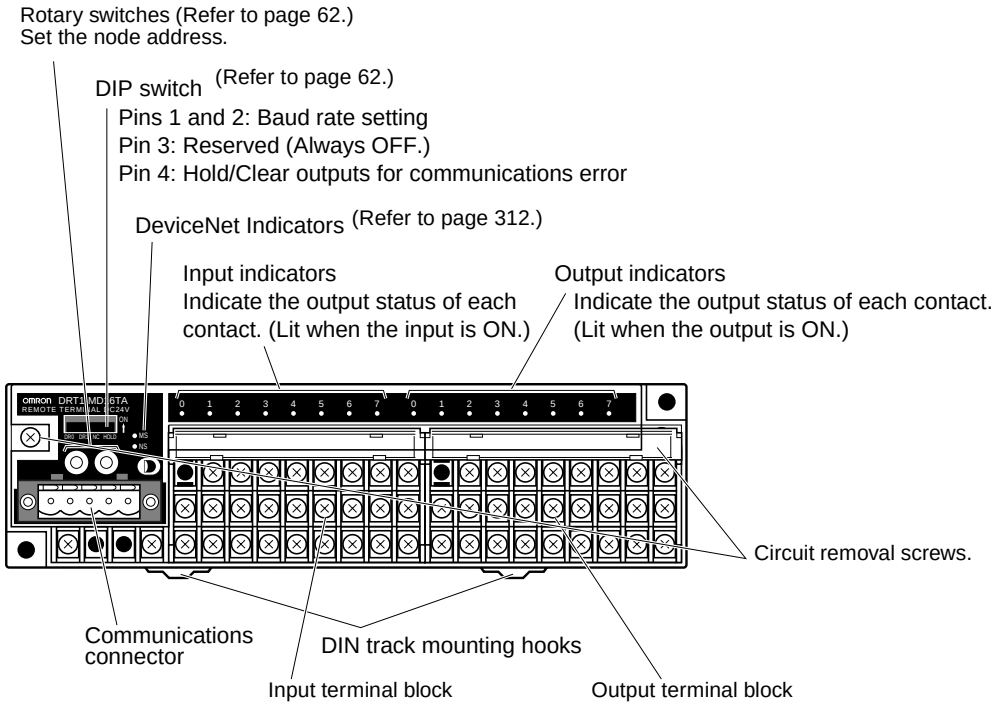

Internal Circuits

The following diagram shows the internal circuits for the DRT1-MD16TA Remote I/O Terminal.

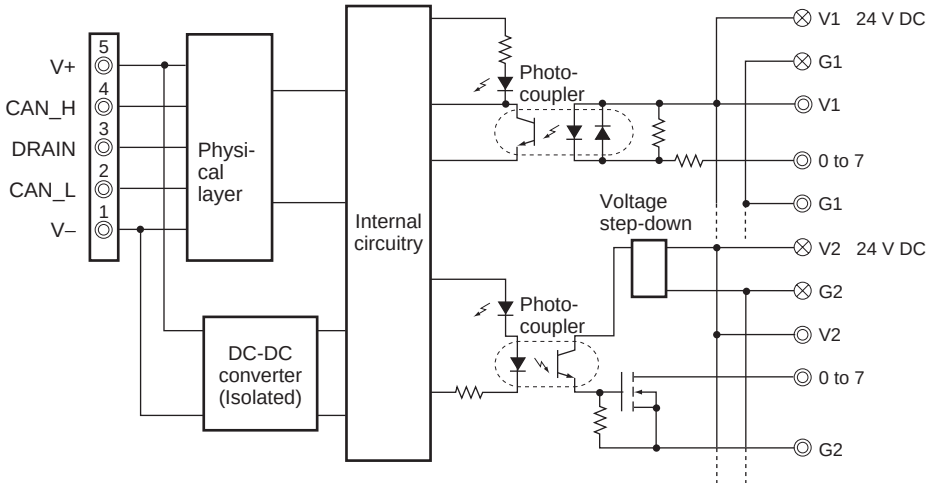

The following diagram shows the internal circuits for the DRT1-MD16TA-1 Remote I/O Terminal.

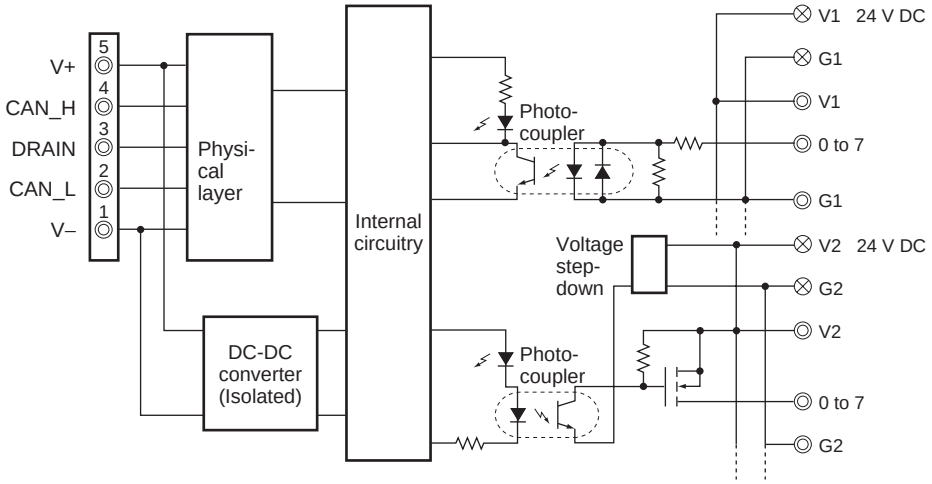

Wiring

The following diagram shows the wiring of the DRT1-MD16TA Remote I/O Terminal

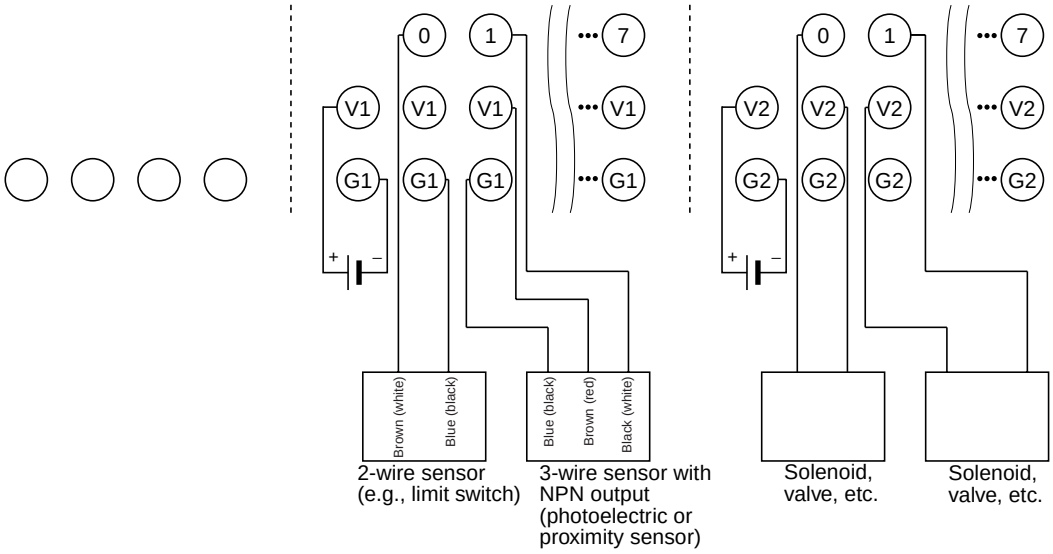

The following diagram shows the wiring of the DRT1-MD16TA-1 Remote I/O Terminal.

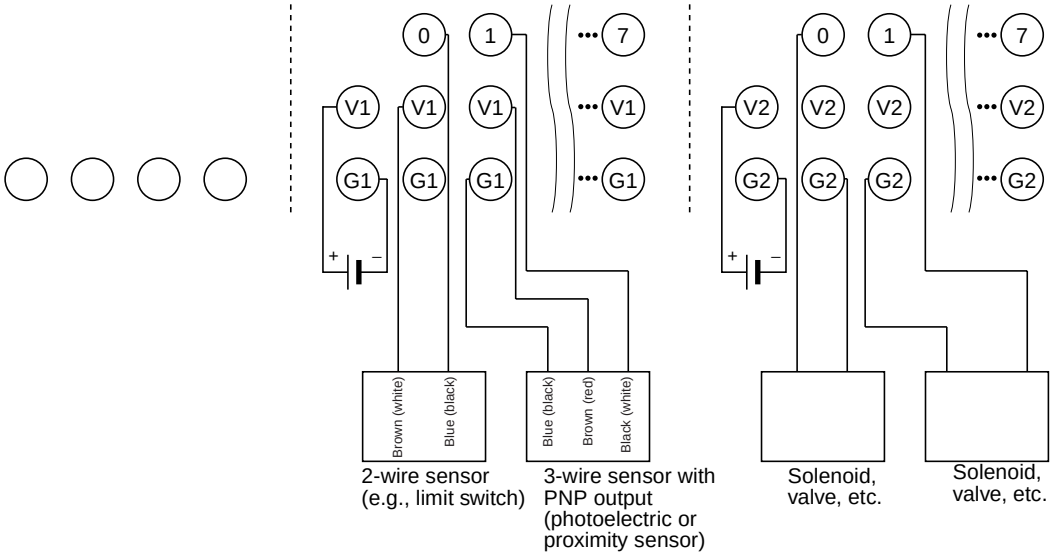

Note

1. V1 is not connected internally to V2, and G1 is not connected internally to G2. Connect them carefully
2. When using inductive loads (such as solenoids or valves), use a load with a built-in diode to absorb reverse power or attach a diode externally.
3. Line colors have been changed accompanying changes in JIS standards for photoelectric and proximity sensors. Previous colors are given in parentheses.

Dimensions

The following diagram shows the dimensions for the DRT1-MD16TA and DRT1-MD16TA-1 Remote I/O Terminals. All dimensions are in mm.

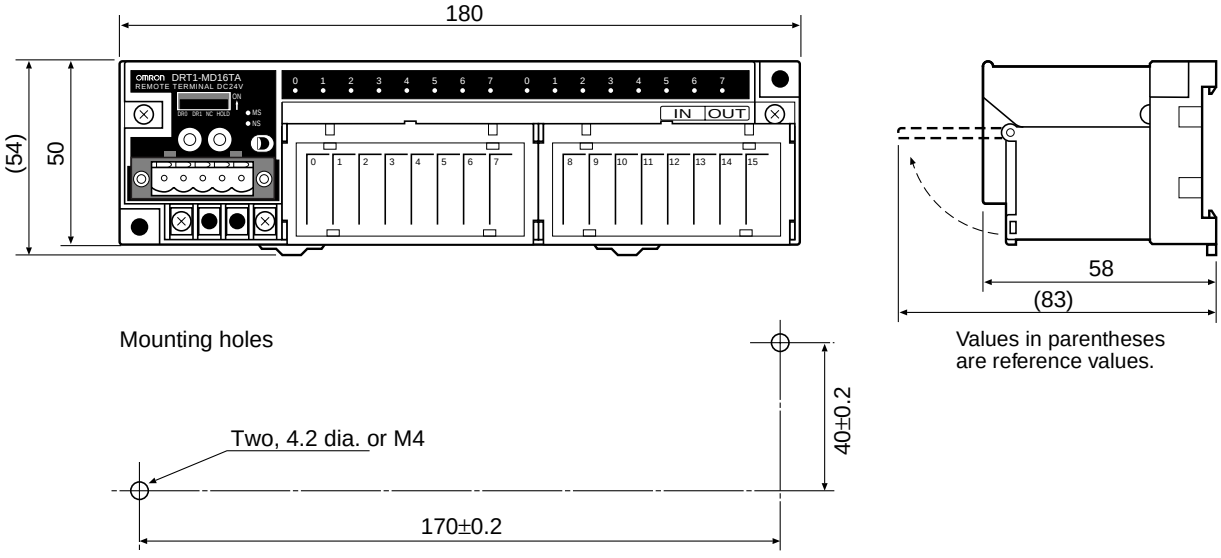

Note The circuit section can be removed by loosening the circuit removal screws. (Refer to *Components of the DRT1-MD16TA and DRT1-MD16TA-1.*)

Always turn OFF the communications, internal, and I/O power supplies before removing or attaching the circuit section.

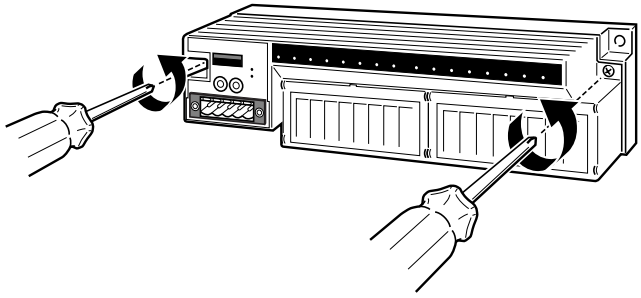

4-4-8 Mounting in Control Panels

Either of the following methods can be used to mount an Remote I/O Terminal in a control panel.

Using Screws

Open mounting holes in the control panel according to the dimensions provided for mounting holes in the dimensions diagrams and then secure the Remote I/O Terminal with M4 screws. The appropriate tightening torque is 0.6 to 0.98 N·m.

Using DIN Track

Mount the back of the Remote I/O Terminal to a 35-mm DIN Track. To mount the Terminal, pull down on the mounting hook on the back of the Terminal with a screwdriver, insert the DIN Track on the back of the Terminal, and then secure the Terminal to the DIN Track. When finished, secure all Slaves on both ends of the DIN Track with End Plates.

Connecting End Plates

Hook the bottom of the End Plate onto the DIN Track, as shown at (1) in the following diagram, then hook the top of the End Plate as shown at (2).

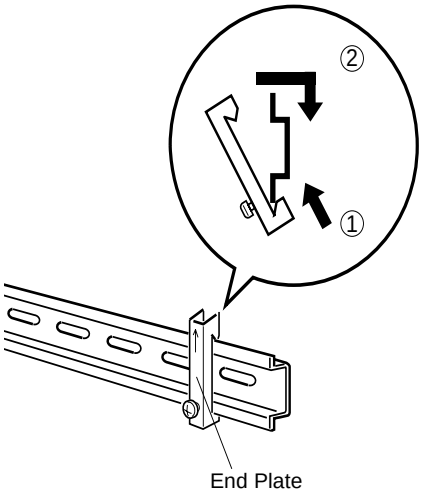

Note Always attach End Plate to both ends of Slaves connected to DIN Track.

Mounting Direction

Unless specific restrictions are given for the Slave, it can be mounted in any direction. Any of the following directions are okay.

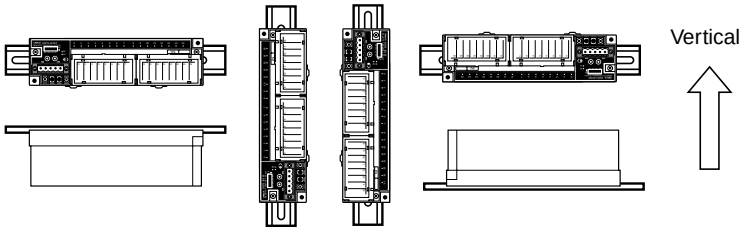

4-4-9 Wiring Internal Power Supplies, I/O Power Supplies, and I/O Lines

The internal circuit power supplies, I/O power supplies, and I/O lines are all wired to M3 screw terminals. Connect M3 crimp terminals and then connect them to the terminal block. Tighten the screws fixing the crimp terminals to a torque of 0.3 to 0.5 N·m.

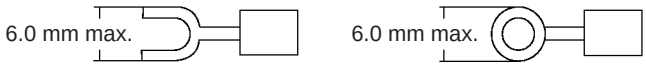

Wiring the Internal Power Supply

Refer to the wiring details for each Slave for information on the terminal arrangement at the terminal block. The following example shows the internal power supply for a DRT1-ID16T Remote Input Terminal

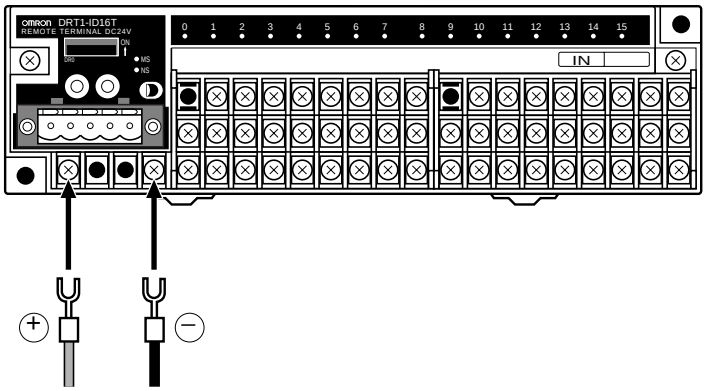

Wiring the I/O Power Supply

Refer to the wiring details for each Slave for information on the terminal arrangement at the terminal block. The following example shows the I/O power supply for a DRT1-ID16T Remote Input Terminal.

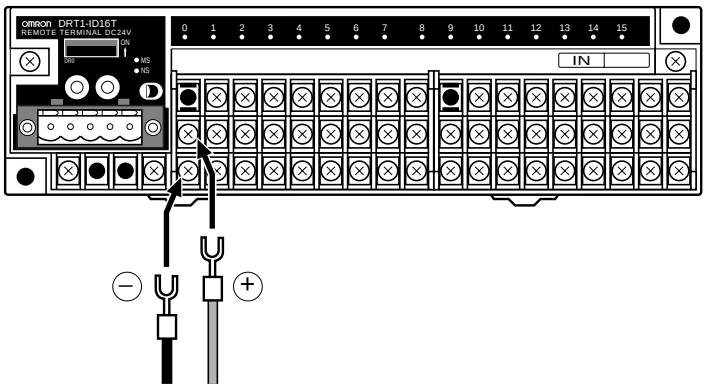

Wiring I/O

Refer to the wiring details for each Slave for information on the terminal arrangement at the terminal block and external I/O wiring. The following example shows the wiring to input 0 on a DRT1-ID16T Remote Input Terminal.

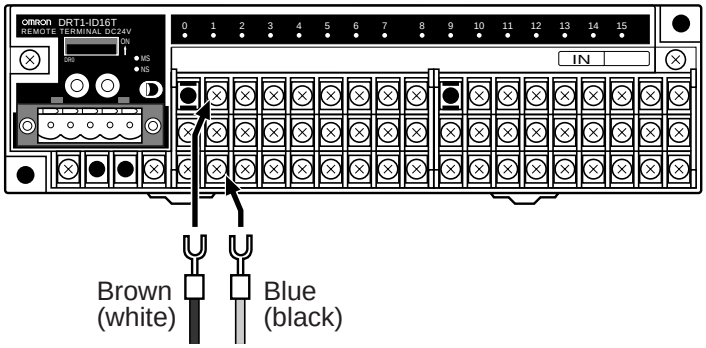

4-5 Transistor Remote I/O Terminals with Connectors

4-5-1 Node Address, Baud Rate, and Output Hold/Clear Settings

This section describes the Slaves' node address setting, baud rate settings, and hold/clear outputs for communications error setting. These settings are made using the following pins on the DIP switch.

Node address setting: Rotary switch on top panel
Baud rate setting: Pins 1 and 2 on DIP switch on bottom panel
Output hold/clear setting: Pin 4 on DIP switch on bottom panel (affects only outputs)

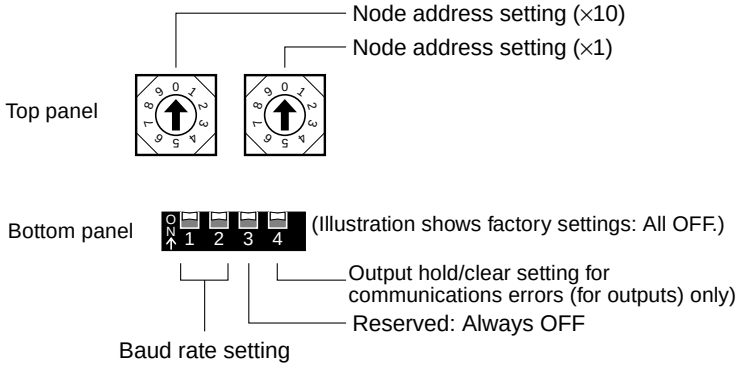

Node Address Settings

The node address of the Remote I/O Terminal is set with two rotary switches. The 10s digit is set on the left and the 1s digit is set on the right. Any node address within the setting range can be used as long as it isn't already set on another node.

Note The Slave won't be able to participate in communications if the same node address is used for the Master or another Slave node (node address duplication error).

Baud Rate Setting

Pins 1 and 2 are used to set the baud rate as shown in the following table. (These pins are factory-set to OFF.)

Pin 1	Pin 2	Baud rate
OFF	OFF	125 kbps (default)
ON	OFF	250 kbps
OFF	ON	500 kbps
ON	ON	Not allowed.

Note

1. Always turn OFF the Slave's power supply (including the communications power supply) before changing the baud rate setting.
2. Set the same baud rate on all of the nodes (Master and Slaves) in the Network. Any Slaves with baud rates different from the Master's rate won't be able to participate in communications. Furthermore, a node with an incorrect baud rate may cause communications errors between nodes with correct baud rate settings.

Setting Pins 3 and 4

The functions of pins 3 and 4 differ for inputs and outputs, as shown in the following diagram.

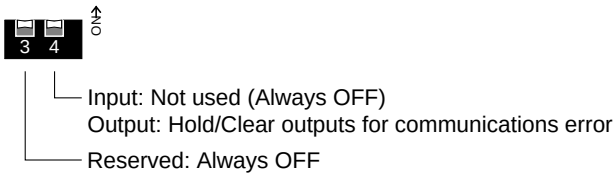

Pin 3: Reserved (Always OFF)

Pin 4: As follows:

Inputs: No function (Always OFF)
Outputs: Hold/Clear outputs for communications error
OFF (Clear): All output data from the Master will be cleared to 0 when a communications error occurs.
ON (Hold): All output data from the Master will be retained when a communications error occurs.

Pins 3 and 4 are factory-set to OFF.

4-5-2 Transistor Remote Input Terminals with 32 Points and Connectors: DRT1-ID32ML (NPN) and DRT1-ID32ML-1 (PNP)

Input Specifications

Item	Specification	
Model	DRT1-ID32ML	DRT1-ID32ML-1
Internal I/O common	NPN	PNP
Input points	32 points	
ON voltage	15 V DC min. (between each input terminal and V)	15 V DC min. (between each input terminal and G)
OFF voltage	5 V DC max. (between each input terminal and V)	5 V DC max. (between each input terminal and G)
OFF current	1.0 mA max.	
Input current	6.0 mA max./point at 24 V DC 3.0 mA min./point at 17 V DC	
Input impedance	4.4 kΩ	
ON delay time	1.5 ms max.	
OFF delay time	1.5 ms max.	

Item	Specification
Max. simultaneously ON input points	32 points (See note.)
Number of circuits	32 points with one common

Note All 32 inputs can be ON simultaneously if the Remote I/O Terminal is mounted facing up, but sufficient space will need to be allowed between Units depending on the ambient temperature. Refer to the *Dimensions* diagram on page page 93 for details.

Components of the DRT1-ID32ML and DRT1-ID32ML-1

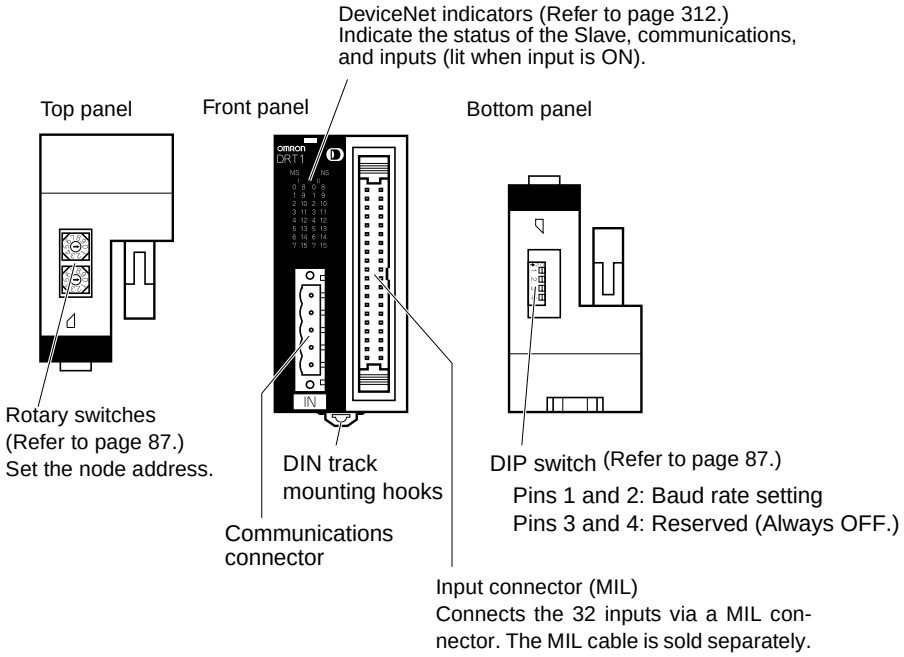

Input Indicators

Name	Meaning
I0 to I15	Indicate the status of bits (contacts) 0 to 15 in word m. Lit when input is ON; not lit when input is OFF.
II0 to II15	Indicate the status of bits (contacts) 0 to 15 in word m+1. Lit when input is ON; not lit when input is OFF.

Note “m” is the first word allocated to the Remote Input Terminal.

Internal Circuits

The following diagram shows the internal circuits for the DRT1-ID32ML Remote Input Terminal.

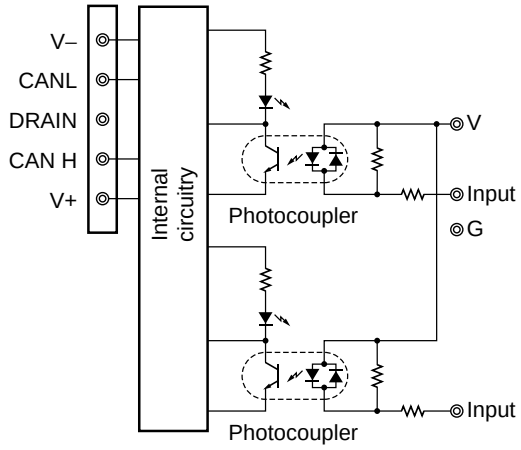

The following diagram shows the internal circuits for the DRT1-ID32ML-1 Remote Input Terminal.

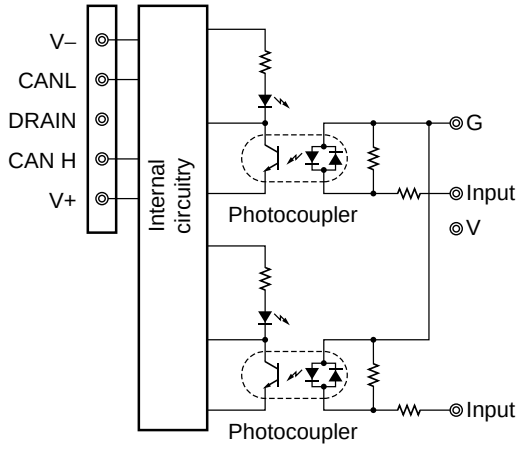

Wiring

The following diagram shows the wiring of the DRT1-ID32ML Remote Input Terminal.

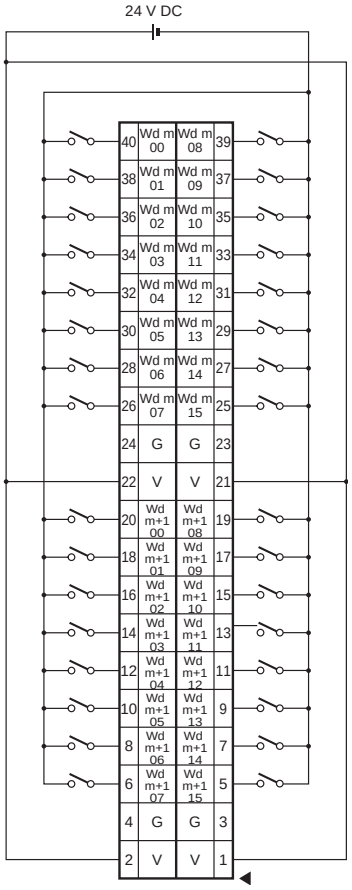

The following diagram shows the wiring of the DRT1-ID32ML-1 Remote Input Terminal.

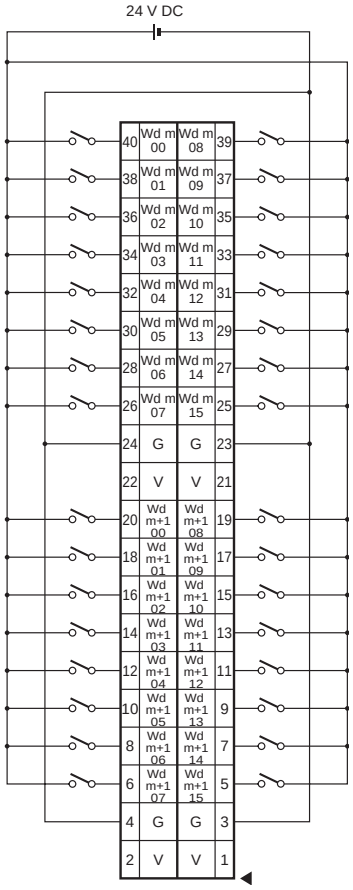

Note

1. V terminals are not connected internally, and G terminals are not connected internally. Connect them carefully.
2. Line colors have been changed accompanying changes in JIS standards for photoelectric and proximity sensors. Previous colors are given in parentheses.

I/O Allocations

The first word allocated to the Remote Input Terminal is referred to as “word m.” Given this, the bit and word allocations to MIL connector pin numbers are as shown in the following diagram.

Bit	15	14	13	12	11	10	9	8	7	6	5	4	3	2	1	0	
Wd m	25	27	29	31	33	35	37	39	26	28	30	32	34	36	38	40	16 inputs
Wd m+1	5	7	9	11	13	15	17	19	6	8	10	12	14	16	18	20	16 inputs

Dimensions

The following diagram shows the dimensions for the DRT1-ID32ML and DRT1-ID32ML-1 Remote Input Terminals. All dimensions are in mm.

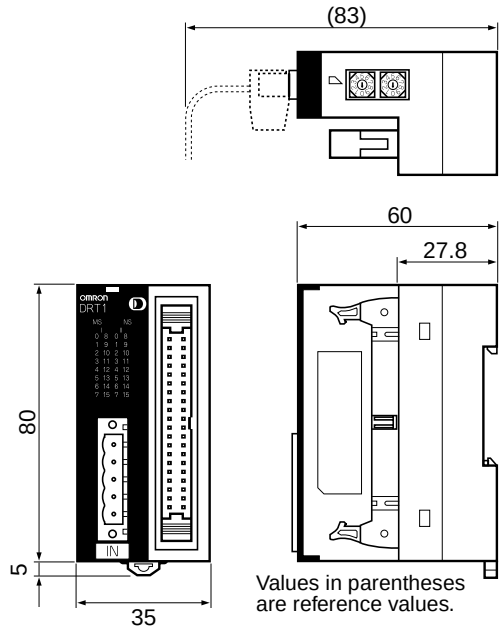

Note There are restriction when using the 32-point Transistor Remote Input Terminals with Connectors depending on the ambient operating temperature.

- If the Terminals are not mounted facing up, they can be mounted side-by-side and all inputs can be turned ON simultaneously at 55°C or less.
- If the Terminals are mounted facing up, the distances and temperatures in the graph given below must be maintained to enable turning ON all inputs simultaneously. For example, at an ambient temperature of 55°C, the Terminals must be separated by at least 10 mm.

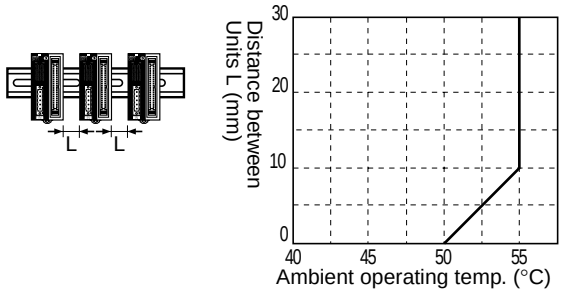

4-5-3 Transistor Remote Output Terminals with 32 Points and Connectors: DRT1-OD32ML (NPN) and DRT1-OD32ML-1 (PNP)

Output Specifications

Item	Specification	
Model	DRT1-OD32ML	DRT1-OD32ML-1
Internal I/O common	NPN	PNP
Output points	32 points	
Rated output current	0.3 A/point, 4 A/common (see note)	
Residual voltage	1.2 V max. (at 0.3 A, between each output terminal and G)	1.2 V max. (at 0.3 A, between each output terminal and V)

Item	Specification
Leakage current	0.1 mA max.
ON delay time	0.5 ms max.
OFF delay time	1.5 ms max.
Number of circuits	32 points with one common

Note Do not allow the total load current to exceed 4 A and do not allow the load current on either the V or G terminal to exceed 1 A.

Components of the DRT1-OD32ML and DRT1-OD32ML-1

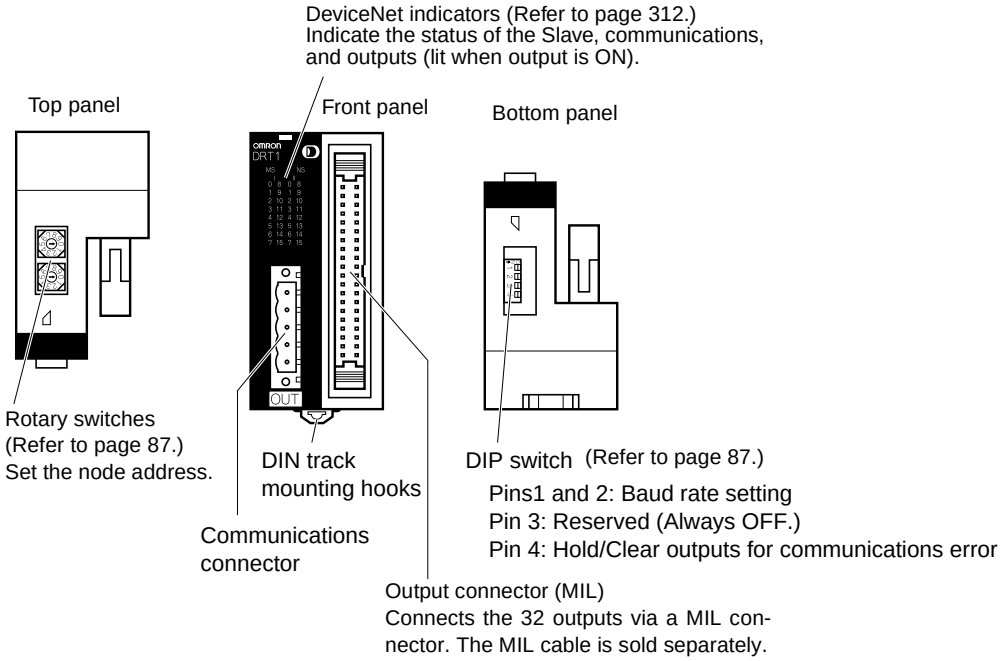

Output Indicators

Name	Meaning
I0 to I15	Indicate the status of bits (contacts) 0 to 15 in word m. Lit when output is ON; not lit when output is OFF.
II0 to II15	Indicate the status of bits (contacts) 0 to 15 in word m+1. Lit when output is ON; not lit when output is OFF.

Note “m” is the first word allocated to the Remote Output Terminal.

Internal Circuits

The following diagram shows the internal circuits for the DRT1-OD32ML Remote Output Terminal.

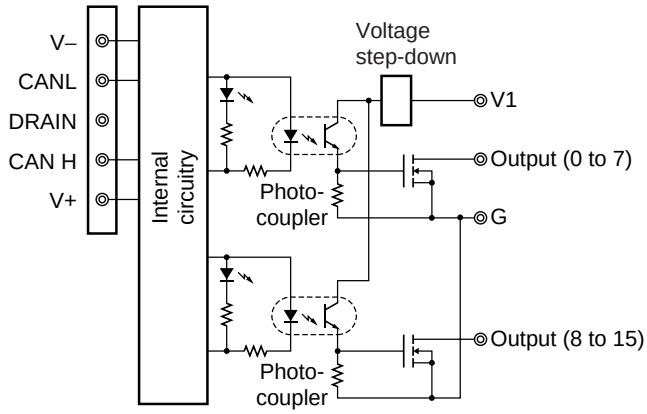

The following diagram shows the internal circuits for the DRT1-OD32ML-1 Remote Output Terminal.

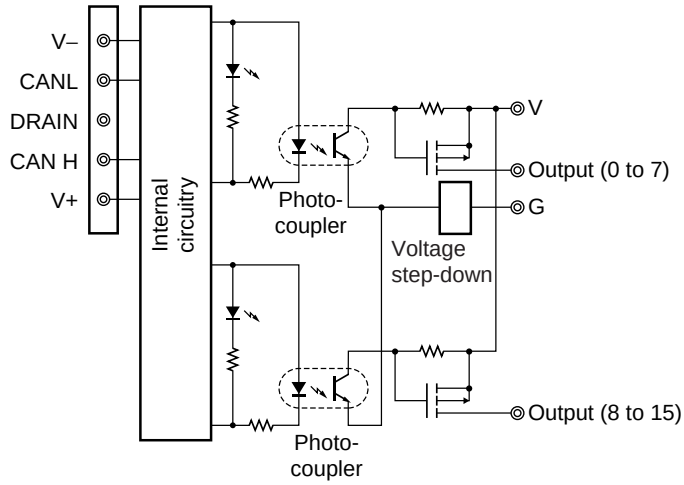

Wiring

The following diagram shows the wiring of the DRT1-OD32ML Remote Output Terminal.

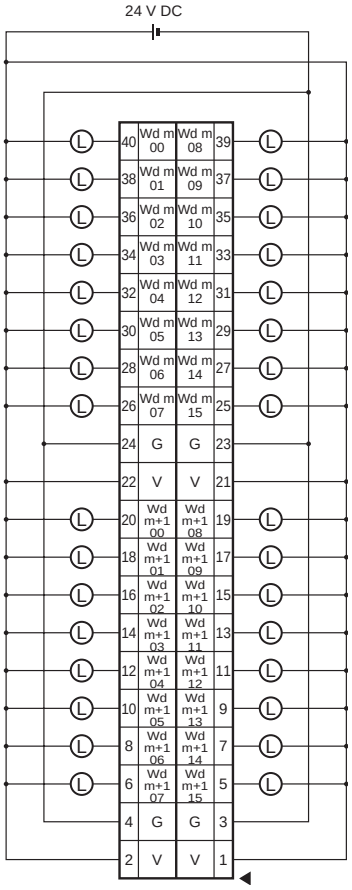

The following diagram shows the wiring of the DRT1-OD32ML-1 Remote Output Terminal.

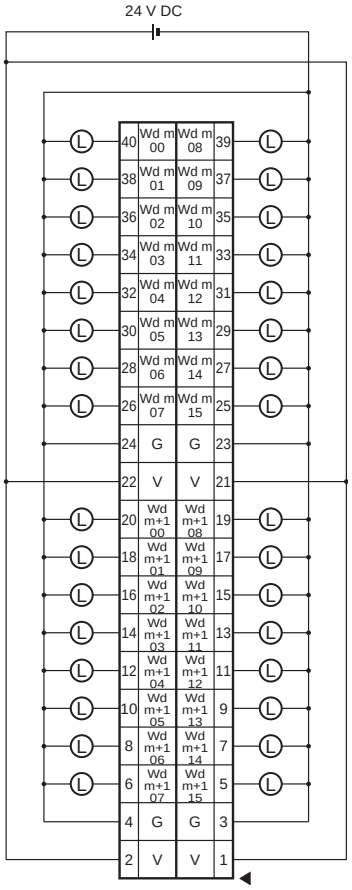

Note

1. The V terminals are connected internally, as are the G terminals. When the power supply exceeds 1.0 A per terminal or the total current drawn by the external loads exceeds 4 A, the output power supply should not be input through the terminals; an external power supply must be used instead.
2. When using inductive loads (such as solenoids or valves), use a load with a built-in diode to absorb reverse power or attach a diode externally.

I/O Allocations

The first word allocated to the Remote Output Terminal is referred to as “word m.” Given this, the bit and word allocations to MIL connector pin numbers are as shown in the following diagram.

Bit	15	14	13	12	11	10	9	8	7	6	5	4	3	2	1	0	
Wd m	25	27	29	31	33	35	37	39	26	28	30	32	34	36	38	40	16 outputs
Wd m+1	5	7	9	11	13	15	17	19	6	8	10	12	14	16	18	20	16 outputs

Dimensions

The following diagram shows the dimensions for the DRT1-OD32ML and DRT1-OD32ML-1 Remote Output Terminals. All dimensions are in mm.

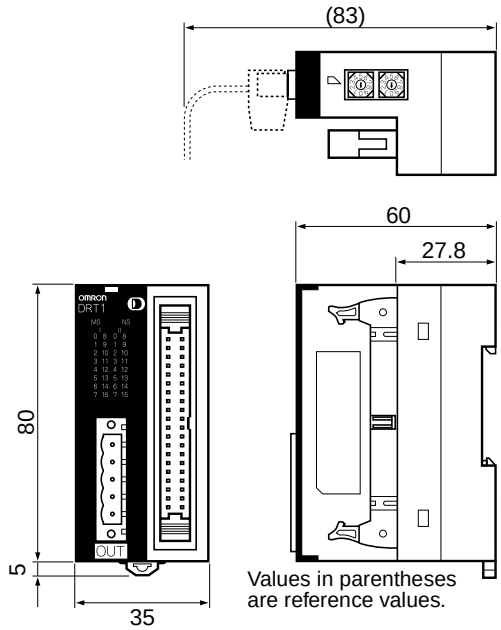

4-5-4 Transistor Remote I/O Terminals with 16 Inputs and 16 Outputs and Connectors: DRT1-MD32ML (NPN) and DRT1-MD32ML-1 (PNP)

Input Specifications

Item	Specification	
Model	DRT1-MD32ML	DRT1-MD32ML-1
Internal I/O common	NPN	PNP
Input points	16 points	
ON voltage	15 V DC min. (between each input terminal and V)	15 V DC min. (between each input terminal and G)
OFF voltage	5 V DC max. (between each input terminal and V)	5 V DC max. (between each input terminal and G)
OFF current	1.0 mA max.	
Input current	6.0 mA max./point at 24 V DC 3.0 mA min./point at 17 V DC	
Input impedance	4.4 kΩ	
ON delay time	1.5 ms max.	
OFF delay time	1.5 ms max.	
Max. No. of ON inputs	16 points	
Number of circuits	16 points with one common	

Output Specifications

Item	Specification	
Model	DRT1-MD32ML	DRT1-MD32ML-1
Internal I/O common	NPN	PNP
Output points	16 points	
Rated output current	0.3 A/point, 2 A/common (see note)	
Residual voltage	1.2 V max. (at 0.3 A, between each output terminal and G)	1.2 V max. (at 0.3 A, between each output terminal and V)
Leakage current	0.1 mA max.	
ON delay time	0.5 ms max.	
OFF delay time	1.5 ms max.	
Number of circuits	16 points with one common	

Note Do not allow the total load current to exceed 2 A and do not allow the load current on either the V or G terminal to exceed 1 A.

Components of the DRT1-MD32ML and DRT1-MD32ML-1

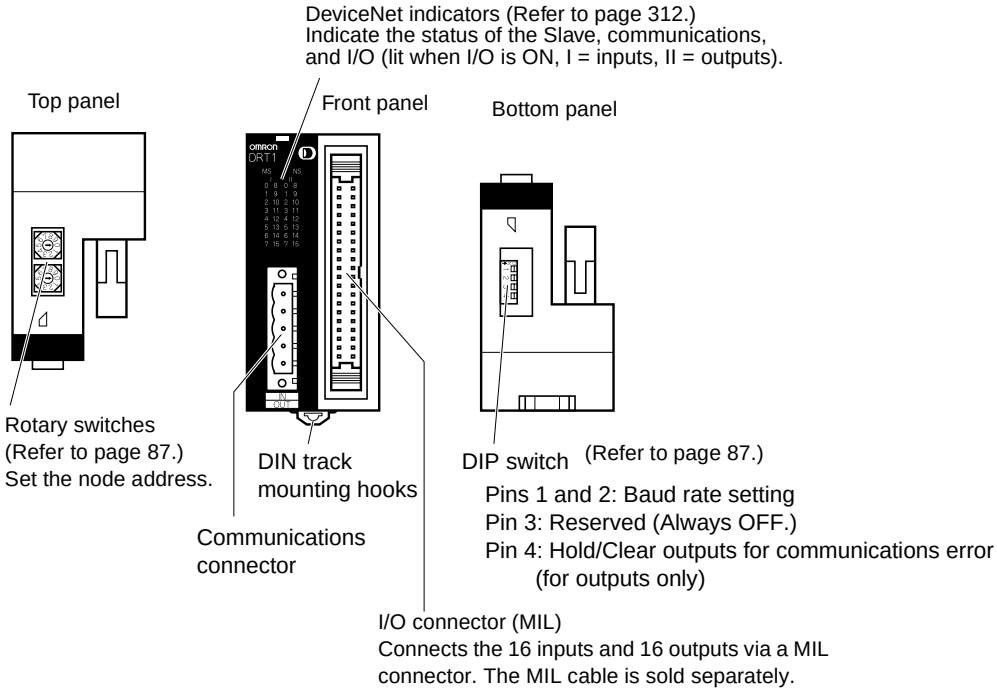

I/O Indicators

Name	Meaning
I0 to I15	Indicate the status of bits (contacts) 0 to 15 in word m. Lit when input is ON; not lit when input is OFF.
II0 to II15	Indicate the status of bits (contacts) 0 to 15 in word n. Lit when output is ON; not lit when output is OFF.

Note m: The first word allocated for the Remote I/O Terminal's IN Area.
n: The first word allocated for the Remote I/O Terminal's OUT Area.

Internal Circuits

The following diagram shows the internal circuits for the DRT1-MD32ML Remote I/O Terminal.

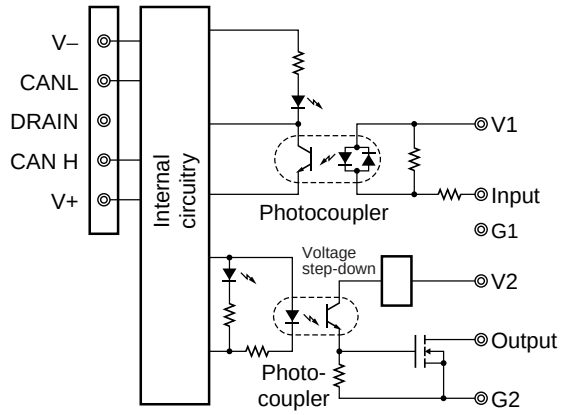

The following diagram shows the internal circuits for the DRT1-MD32ML-1 Remote I/O Terminal.

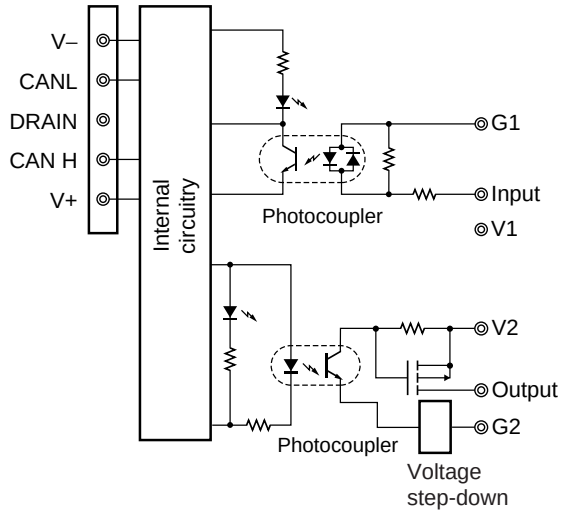

Wiring

The following diagram shows the wiring of the DRT1-MD32ML Remote I/O Terminal.

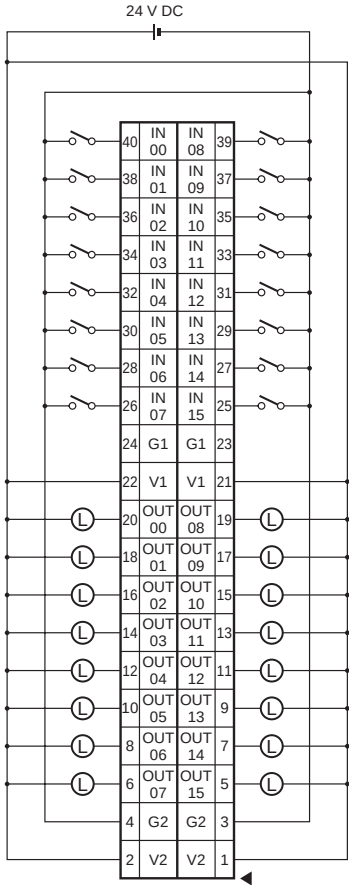

The following diagram shows the wiring of the DRT1-MD32ML-1 Remote I/O Terminal.

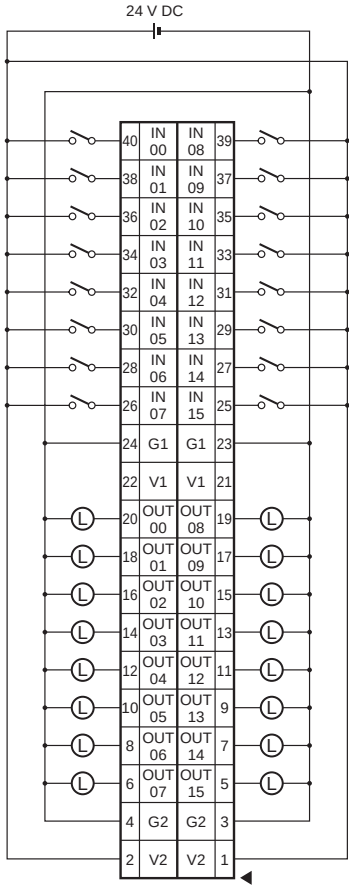

Note

1. The V1 terminals are connected internally, as are the V2 terminals, the G1, and the G2 terminals. (V1 is not connected to V2 and G1 is not connected to G2.) When the power supply exceeds 1.0 A per terminal or the total current drawn by the external loads exceeds 2 A, the output power supply should not be input through the terminals; an external power supply must be used instead.
2. When using inductive loads (such as solenoids or valves), use a load with a built-in diode to absorb reverse power or attach a diode externally.
3. Line colors have been changed accompanying changes in JIS standards for photoelectric and proximity sensors. Previous colors are given in parentheses.

I/O Allocations

The first word allocated to the Remote I/O Terminal is referred to as “word m.” Given this, the bit and word allocations to MIL connector pin numbers are as shown in the following diagram.

Bit	15	14	13	12	11	10	9	8	7	6	5	4	3	2	1	0	
Wd m	25	27	29	31	33	35	37	39	26	28	30	32	34	36	38	40	16 inputs
Wd n	5	7	9	11	13	15	17	19	6	8	10	12	14	16	18	20	16 outputs

Dimensions

The following diagram shows the dimensions for the DRT1-MD32ML and DRT1-MD32ML-1 Remote I/O Terminals. All dimensions are in mm.

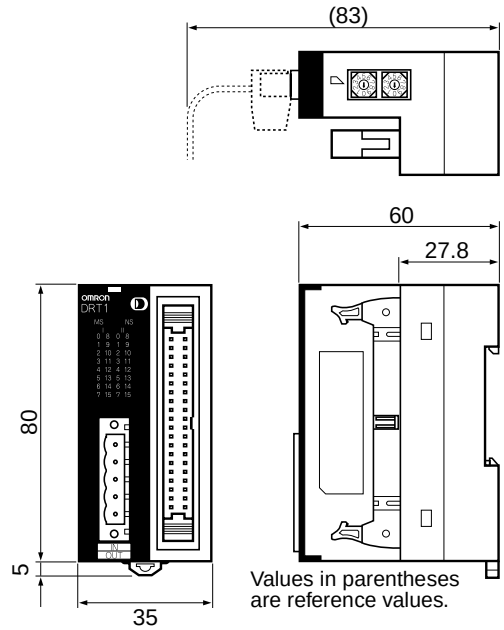

Note There are restriction when using the 32-point Transistor Remote I/O Terminals with Connectors depending on the ambient operating temperature.

- If the Terminals are not mounted facing up, they can be mounted side-by-side and all inputs can be turned ON simultaneously at 55°C or less.
- If the Terminals are mounted facing up, the distances and temperatures in the graph given below must be maintained to enable turning ON all inputs simultaneously. For example, at an ambient temperature of 55°C, the Terminals must be separated by at least 10 mm.

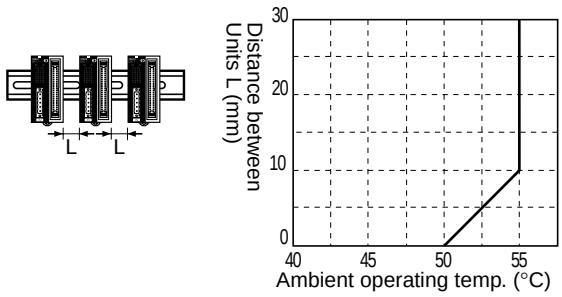

4-5-5 Mounting in Control Panels

Either of the following three methods can be used to mount an Remote I/O Terminal in a control panel.

- Mounting to DIN Track (page 104)
- Mounting perpendicular to a panel using a Mounting Bracket (page 105)
- Mounting parallel to a panel using a Mounting Bracket (page 106)

Note 1. There are restriction when using the 32-point Transistor Remote I/O Terminals with Connectors or 32-point Transistor Remote Input Terminals with Connectors depending on the ambient operating temperature.

- If the Terminals are not mounted facing up, they can be mounted side-by-side and all inputs can be turned ON simultaneously at 55°C or less.
- If the Terminals are mounted facing up, the distances and temperatures in the graph given below must be maintained to enable turning ON all inputs simultaneously. For example, at an ambient temperature of 55°C, the Terminals must be separated by at least 10 mm.

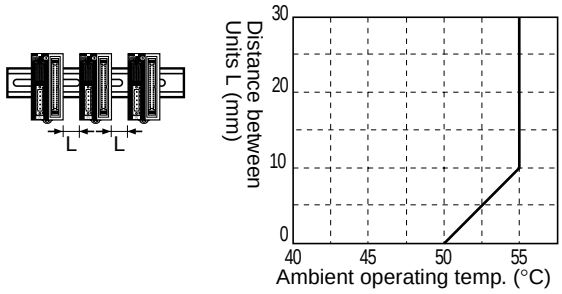

2. Remote I/O Terminals with Connectors cannot be mounted to a control panel with just screws; the SRT2-ATT02 Mounting Bracket B (sold separately) must be used.

Mounting to DIN Track

Mount the back of the Remote I/O Terminal to a 35-mm DIN Track. To mount the Terminal, pull down on the mounting hook on the back of the Terminal with a screwdriver, insert the DIN Track on the back of the Terminal, and then secure the Terminal to the DIN Track. When finished, secure all Slaves on both ends of the DIN Track with End Plates.

Connecting End Plates

Hook the bottom of the End Plate onto the DIN Track, as shown at (1) in the following diagram, then hook the top of the End Plate as shown at (2).

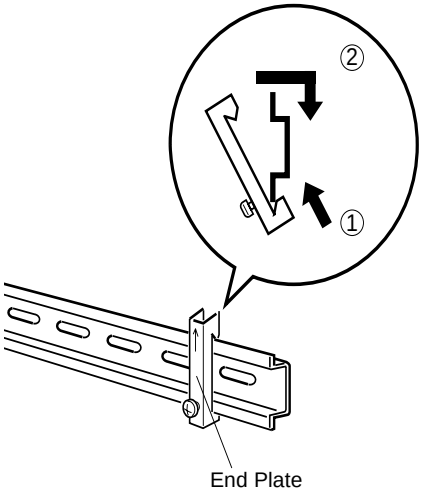

Note Always attach End Plate to both ends of Slaves connected to DIN Track.

Mounting Perpendicular to a Panel Using a Mounting Bracket

A Remote I/O Terminal with a Connector can be mounted perpendicular to a panel by using the SRT2-ATT02 Mounting Bracket B (sold separately).

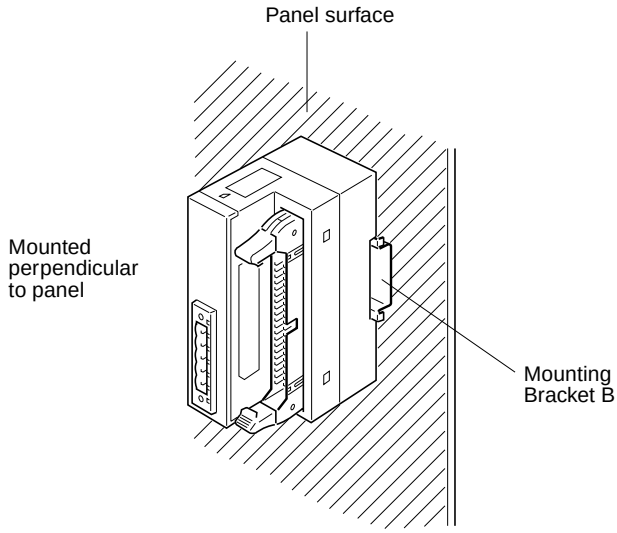

Mounting Method

Use the following procedure to mounted the Remote I/O Terminal.

1,2,3...

1. Mount the SRT2-ATT02 Mounting Bracket B to the wall using two Phillip's screws as shown below. Refer to page 107 for mounting dimensions.

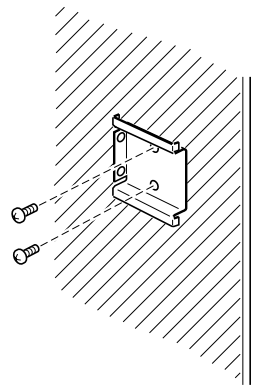

2. Mount the Remote I/O Terminal to the Mounting Bracket B. The Mounting Bracket B is shaped like a DIN Track. Use the same mounting procedure as for DIN Track.

Mounting Holes and Slave Center Line

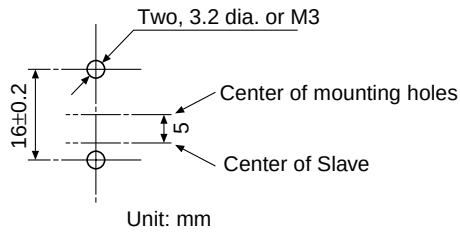

Mounting Parallel to a Panel Using a Mounting Bracket

A Remote I/O Terminal with a Connector can be mounted parallel to a panel by using the SRT2-ATT02 Mounting Bracket B (sold separately).

Note A multi-drop DeviceNet connector cannot be used if the Remote I/O Terminal is mounted parallel to the panel.

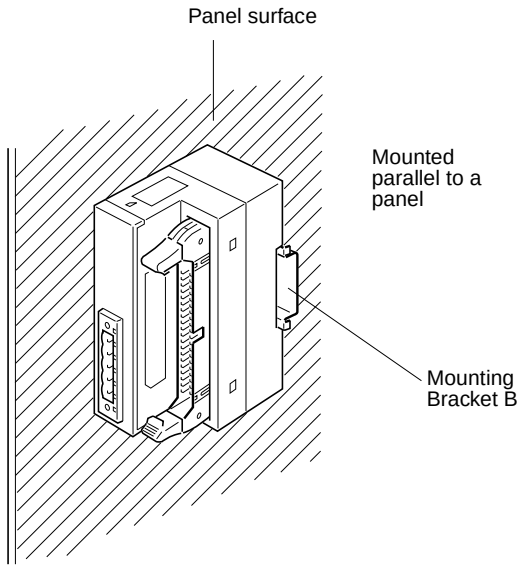

Mounting Method

Use the following procedure to mounted the Remote I/O Terminal.

1,2,3... 1. Mount the SRT2-ATT02 Mounting Bracket B to the wall using two Phillip's screws as shown below. Refer to page 107 for mounting dimensions.

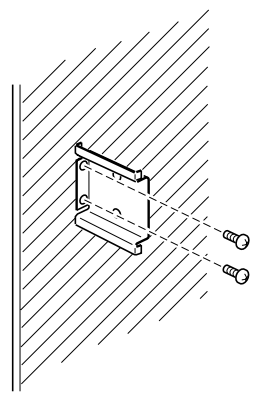

2. Mount the Remote I/O Terminal to the Mounting Bracket B. The Mounting Bracket B is shaped like a DIN Track. Use the same mounting procedure as for DIN Track.

Mounting Holes and Slave Center Line

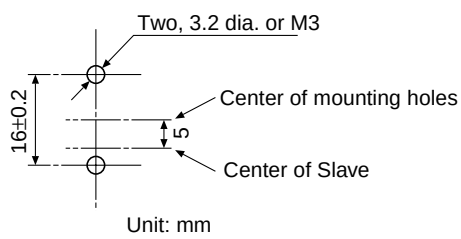

Mounting Direction

Unless specific restrictions are given for the Slave, it can be mounted in any direction. Any of the following directions are okay.

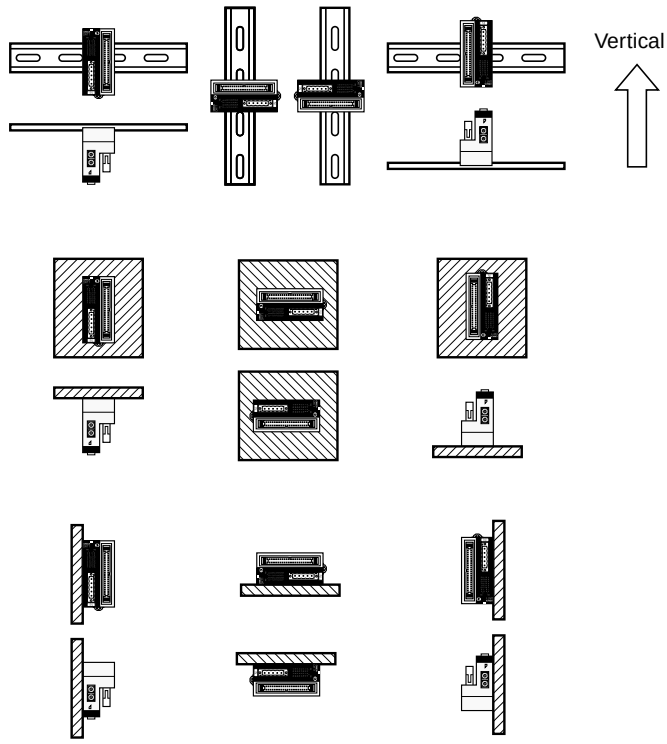

Mounting Dimensions

Mounted to DIN Track

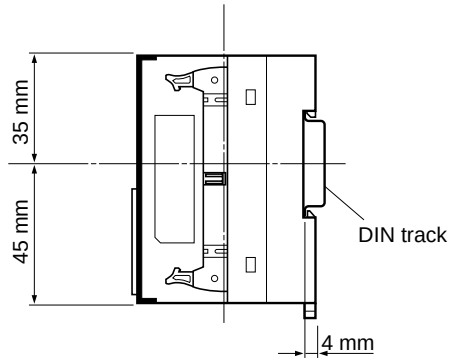

Mounted to Perpendicular to a Panel

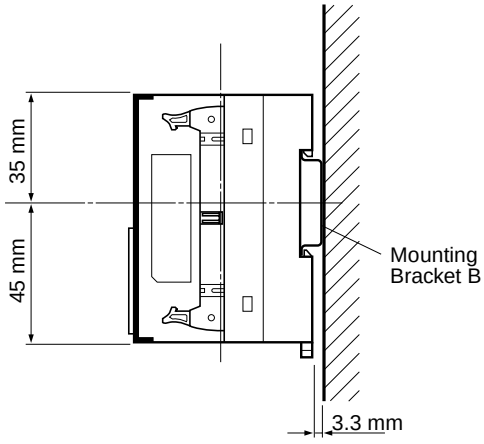

Mounted to Parallel to a Panel

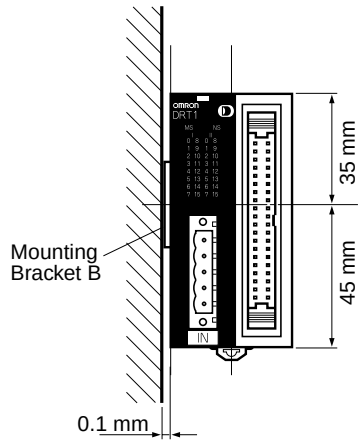

Mounting Bracket Dimensions

The dimensions of the SRT2-ATT02 Mounting Bracket B are shown below.

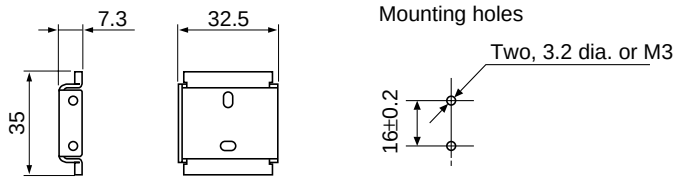

4-5-6 Wiring Internal Power Supplies, I/O Power Supplies and I/O

Internal power is supplied together with the communications power supply and does not need to be wired separately. I/O power supplies and I/O are wired through the I/O MIL connector.

Connecting to I/O Terminals Using OMRON MIL Cables

The MIL Cables listed in the following table are available to connect OMRON I/O Terminals (e.g., I/O Relay Blocks). Select the MIL Cable that matches the Remote I/O Terminal and the I/O Terminal.

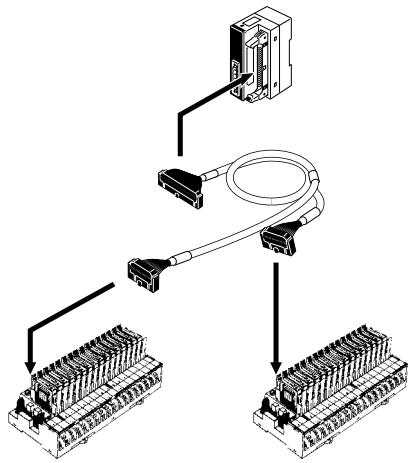

Slave	MIL Cable	I/O Relay Block or other I/O Terminal	Remarks
DRT1-ID32ML	G79-I50-25-D1 (50 cm) G79-I75-50-D1 (75 cm)	G7TC-ID16 G7TC-IA16	
DRT1-OD32ML	G79-O50-25-D1 (50 cm) G79-O75-50-D1 (75 cm)	G7TC-OC08/OC16 G70D-SOC16/VSOC16 G70A-ZOC16-3 G70D-FOM16/VFOM16	

Slave	MIL Cable	I/O Relay Block or other I/O Terminal	Remarks
DRT1-MD32ML	G79-M50-25-D1 (50 cm) G79-M75-50-D1 (75 cm)	Inputs: G7TC-ID16/IA16 Outputs: G7TC-OC08/OC16 G70D-SOC16/VSOC16 G70A-ZOC16-3	I/O are distinguished by color. Input tube color: Red Output tube color: Yellow
DRT1-ID32ML-1	G79-I50-25-D2 (50 cm) G79-I75-50-D2 (75 cm)	G70A-ZIM16-5	---
DRT1-OD32ML-1	G79-O50-25-D1 (50 cm) G79-O75-50-D1 (75 cm)	G70A-ZOC16-4 G70D-SOC16-1	---
	G79-I50-25-D1 (50 cm) G79-I75-50-D1 (75 cm)	G7TC-OC16-4 M7F	---
DRT1-MD32ML-1	G79-M50-25-D2 (50 cm) G79-M75-50-D2 (75 cm)	Inputs: G70A-ZIM16-5 Outputs: G70A-ZOC16-4 G70D-SOC16-1	I/O are distinguished by color. Input tube color: Red Output tube color: Yellow

The following cables are also available with a MIL connector on the Remote I/O Terminal end and loose wires on the other end.

MIL Cable	Remarks
G79-A200C-D1 (2 m) G79-A500C-D1 (5 m)	Loose wire size: AWG28 Loose wires are cut.
G79-Y100C-D1 (1 m) G79-Y200C-D1 (2 m) G79-Y500C-D1 (5 m)	Forked terminals are attached to the loose wires. Forked terminals: 161071-M2 (Nippon Terminal)

The MIL pin numbers, loose wire colors, dot markings, and dot colors are listed in the following table.

Pin No.	Core color	Dot marking	Dot color	Pin No.	Core color	Dot marking	Dot color
1	Light brown	■	Black	21	Light brown	■■■	Black
2			Red	22			Red
3	Yellow		Black	23	Yellow		Black
4			Red	24			Red
5	Light green		Black	25	Light green		Black
6			Red	26			Red
7	Gray		Black	27	Gray		Black
8			Red	28			Red
9	White		Black	29	White		Black
10			Red	30			Red
11	Light brown	■■	Black	31	Light brown	■■■■	Black
12			Red	32			Red
13	Yellow		Black	33	Yellow		Black
14			Red	34			Red
15	Light green		Black	35	Light green		Black
16			Red	36			Red
17	Gray		Black	37	Gray		Black
18			Red	38			Red
19	White		Black	39	White		Black
20			Red	40			Red

Using Pressure-welded Flat Cable Connectors

Use the following procedure to prepare flat cables with XG4M-4030-T MIL Connectors.

1,2,3...

1. Use precision screwdrivers to open the hooks on both ends and separate the contacts from the cover of the MIL socket. There are two tabs on each end of the contact side of the socket. Release both of these at the same time, not one at a time.

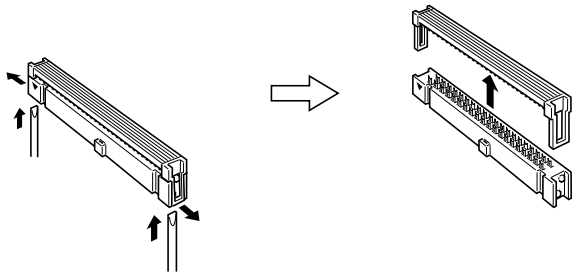

2. Place the flat cable between the contacts and cover of the socket, align the contacts, and press on the cover to lock it in place on the contacts. Use a vise or similar device to firmly press the cover on until the tabs are properly joined.
   Applicable Wires: 1.27-mm pitch flat cable, AWG28 (7-strand wire)
   UL2651: Standard Cable, UL20012: Stranded Cable, UL20028: Color Coded Cable

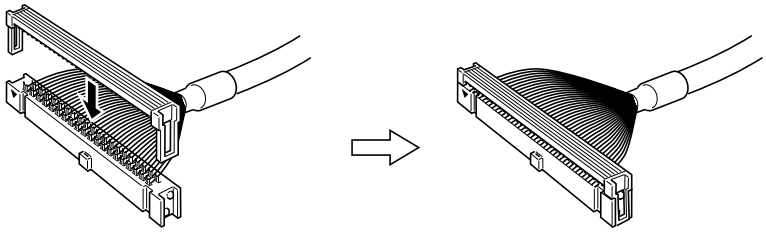

3. If required, fold the back over the connector, and insert and lock a strain relief in place.

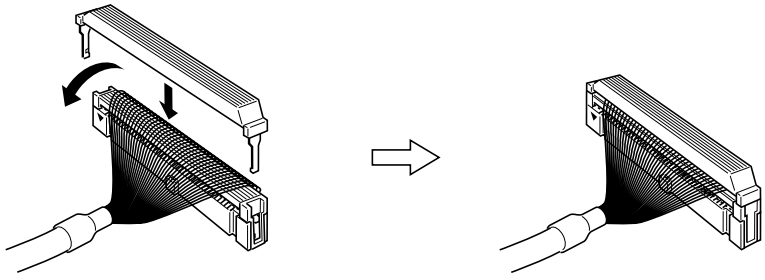

4. Connect the MIL Connector to a Remote I/O Terminal with a Connector.

Using Loose Wires with Pressure-welded Connectors

Use the following parts to prepare cables. The Socket used depends on the wire size.

Part	Cable wire size: AWG24	Cable wire size: AWG26 to 26
Socket	XG5M-4032-N	XG5M-4035-N
Semi-cover (See note 1.)	XG5S-2001	
Hood Cover (See note 2.)	XG5S-5022	

Note

1. Two Semi-covers are required for each connector.

2. A multi-drop DeviceNet Connector cannot be used if the Hood Cover is used.

Refer to the *PCB Relays Catalog* (X33) for details on the XG5 Loose Wire Pressure-welded Connectors.

4-6 Remote Adapters

4-6-1 Node Address, Baud Rate, and Output Hold/Clear Settings

This section describes the Slaves' node address setting, baud rate settings, and hold/clear outputs for communications error setting. These settings are made using the following pins on the DIP switch.

Node address setting: Pins 1 through 6
Baud rate setting: Pins 7 and 8

Output hold/clear setting:Pin 10 (affects only outputs)

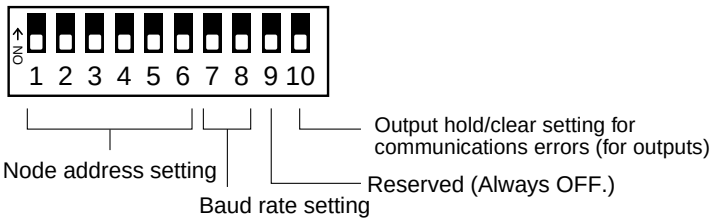

Node Address Settings

Each Slave's node address is set with pins 1 through 6 of the Slave's DIP switch. Any node address within the setting range can be used as long as it isn't already set on another node.

DIP switch setting						Node address
Pin 6	Pin 5	Pin 4	Pin 3	Pin 2	Pin 1	
0	0	0	0	0	0	0 (default)
0	0	0	0	0	1	1
0	0	0	0	1	0	2
⋮						⋮
1	1	1	1	0	1	61
1	1	1	1	1	0	62
1	1	1	1	1	1	63

0: OFF, 1: ON

Note

1. Refer to *Appendix A Node Address Settings Table* for a complete table of DIP switch settings.
2. The Slave won't be able to participate in communications if the same node address is used for the Master or another Slave node (node address duplication error).

Baud Rate Setting

Pins 7 and 8 are used to set the baud rate as shown in the following table. (These pins are factory-set to OFF.)

Pin 7	Pin 8	Baud rate
OFF	OFF	125 kbps (default)
ON	OFF	250 kbps
OFF	ON	500 kbps
ON	ON	Not allowed.

Note

1. Always turn OFF the Slave's power supply (including the communications power supply) before changing the baud rate setting.
2. Set the same baud rate on all of the nodes (Master and Slaves) in the Network. Any Slaves with baud rates different from the Master's rate won't be able to participate in communications. Furthermore, a node with an incorrect baud rate may cause communications errors between nodes with correct baud rate settings.

Setting Pins 9 and 10

The functions of pins 9 and 10 differ for inputs and outputs, as shown in the following diagram.

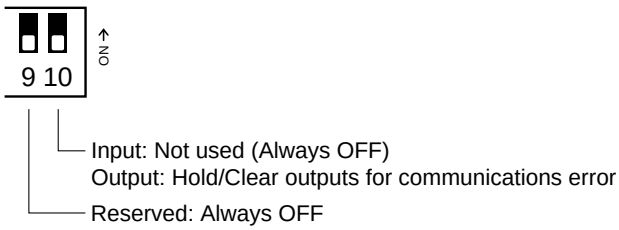

Pin 9: Reserved (Always OFF)

Pin 10: As follows:

Inputs:	No function (Always OFF)
Outputs:	Hold/Clear outputs for communications error
OFF (Clear):	All output data from the Master will be cleared to 0 when a communications error occurs.
ON (Hold):	All output data from the Master will be retained when a communications error occurs.

Pins 9 and 10 are factory-set to OFF.

4-6-2 Remote Input Adapters with 16 Points: DRT1-ID16X (NPN) and DRT1-ID16X-1 (PNP)

Input Specifications

Item	Specification	
Model	DRT1-ID16X	DRT1-ID16X-1
Internal I/O common	NPN	PNP
Input points	16 points (Try to use fewer than 8 points over an average 5 minute time span.)	
ON voltage	15 V DC min. (between each input terminal and V)	15 V DC min. (between each input terminal and G)
OFF voltage	5 V DC max. (between each input terminal and V)	5 V DC max. (between each input terminal and G)
OFF current	0.8 mA max.	
Input current	10 mA max./point	
ON delay time	9 ms max.	
OFF delay time	14.5 ms max.	
Number of circuits	8 points with one common	

Components of the DRT1-ID16X and DRT1-ID16X-1

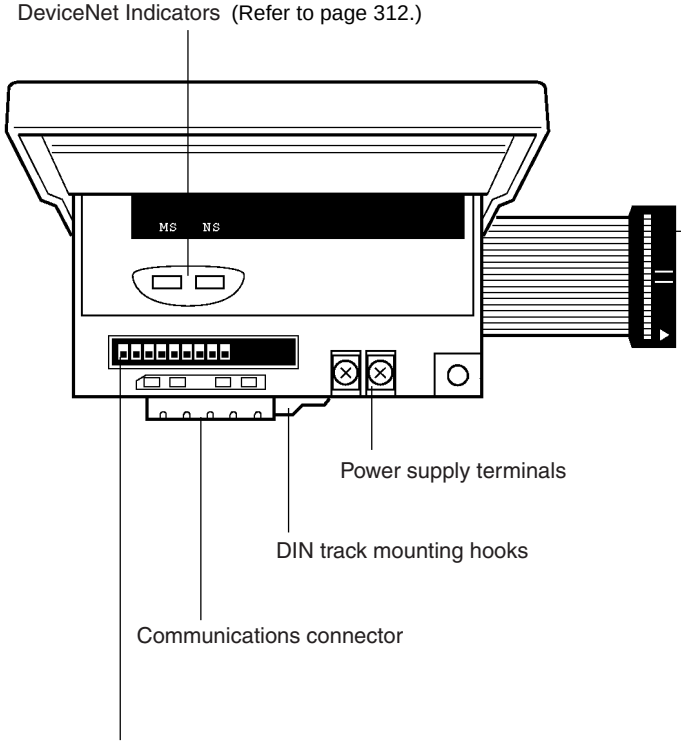

Internal Circuits

The following diagram shows the internal circuits for the DRT1-ID16X Remote Input Adapter.

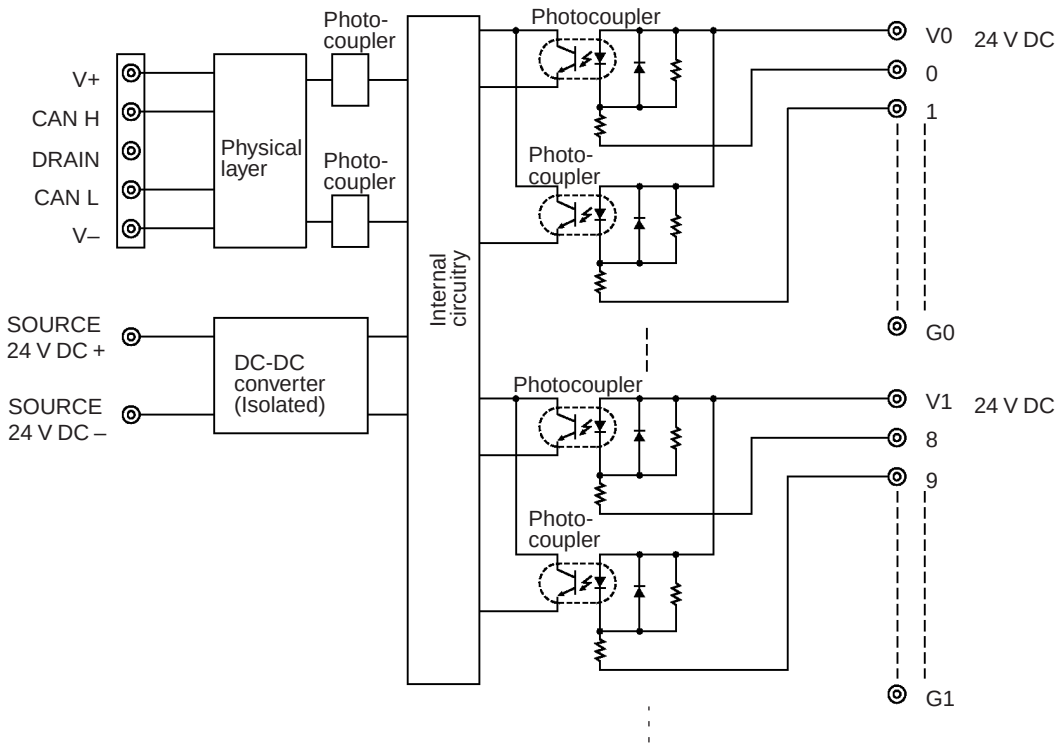

The following diagram shows the internal circuits for the DRT1-ID16X-1 Remote Input Adapter.

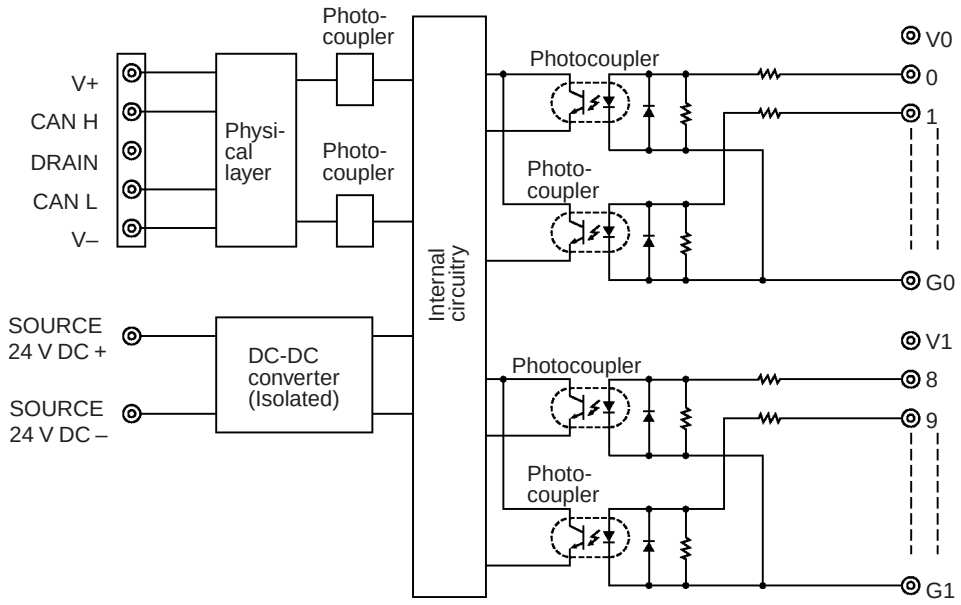

Wiring of the DRT1-ID16X (NPN)

Connector Pin Allocation

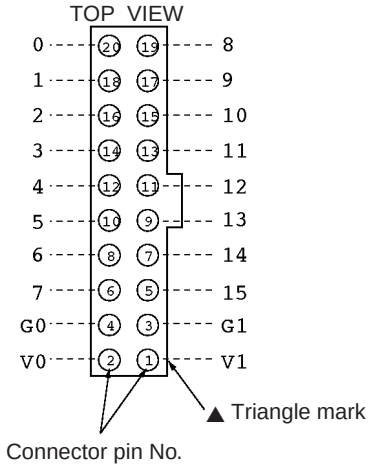

Internal Circuits Power Supply

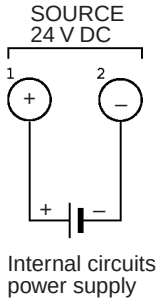

Input Devices

Use a printed circuit board to wire I/O devices to a flat cable MIL plug which can be connected to the Remote Adapter.

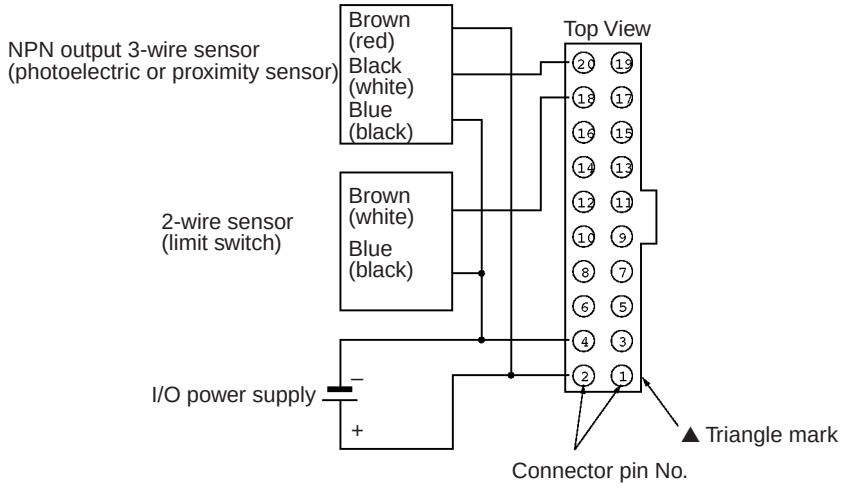

Note In accordance with the changes in the standards for photoelectric sensors and proximity sensors, wire colors have been changed. Colors in parentheses are the old wire colors.

Wiring of the DRT1-ID16X-1 (PNP)

Connector Pin Allocation

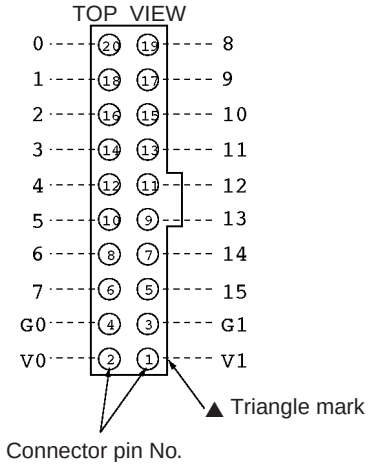

Internal Circuits Power Supply

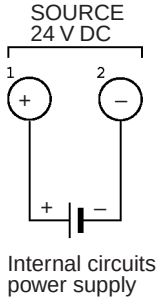

Input Devices

Use a printed circuit board to wire I/O devices to a flat cable MIL plug which can be connected to the Remote Adapter.

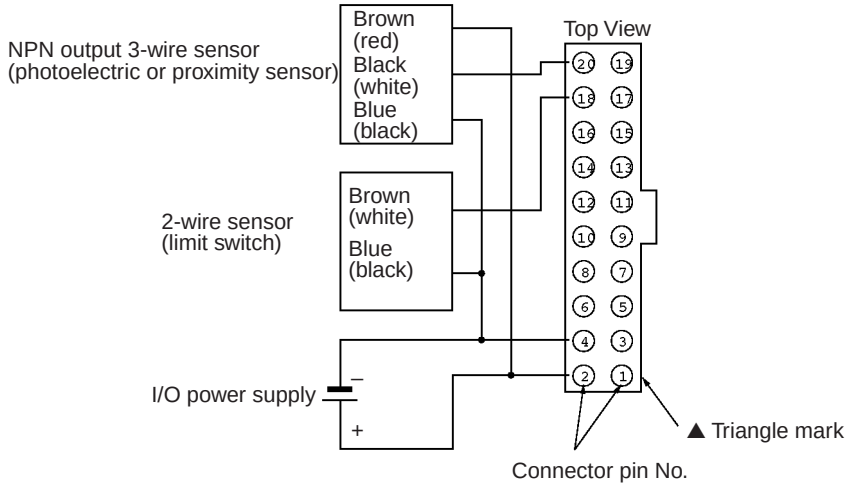

Note In accordance with the changes in the standards for photoelectric sensors and proximity sensors, wire colors have been changed. Colors in parentheses are the old wire colors.

Dimensions

The following diagram shows the dimensions for the DRT1-ID16X and DRT1-ID16X-1 Remote Input Adapters. All dimensions are in mm.

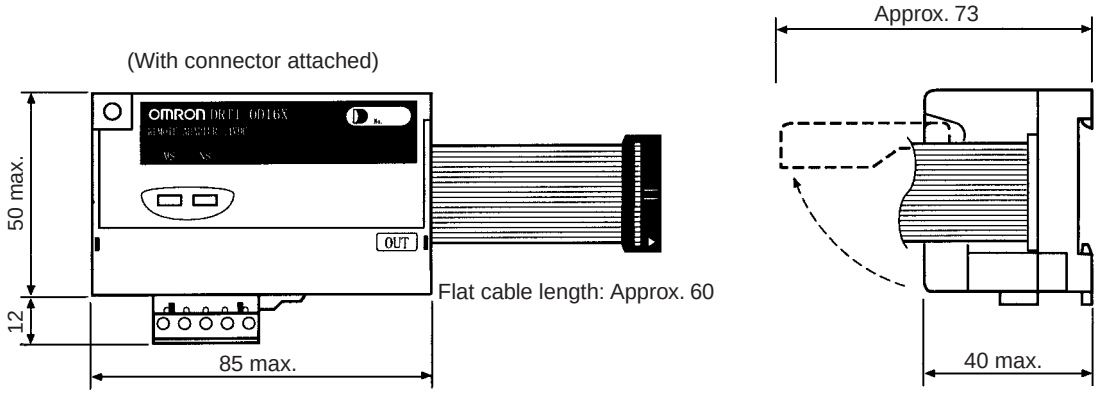

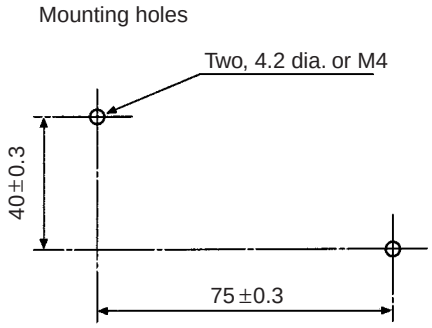

4-6-3 Remote Output Adapters with 16 Points: DRT1-OD16X (NPN) and DRT1-OD16X-1 (PNP)

Output Specifications

Item	Specification	
Model	DRT1-OD16X	DRT1-OD16X-1
Internal I/O common	NPN	PNP
Output points	16 points	
Rated output current	30 mA/point	
Residual voltage	1.2 V max. (30 mA DC, between each output terminal and G)	1.2 V max. (30 mA DC, between each output terminal and V)
Leakage current	0.1 mA max.	
ON delay time	0.5 ms max.	
OFF delay time	1.5 ms max.	
Number of circuits	8 points with one common	

Components of the DRT1-OD16X and DRT1-OD16X-1

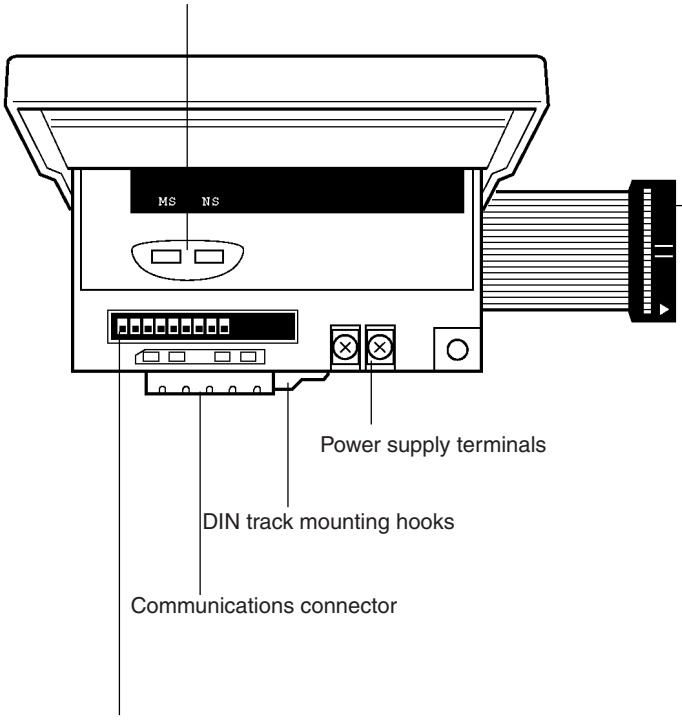

DIP switch (Refer to page 40.)

Pins 1 to 6: Node address setting
Pins 7 and 8: Baud rate setting
Pin 9: Reserved (Always OFF.)
Pin 10: Hold/clear outputs for communications error

Internal Circuits

The following diagram shows the internal circuits for the DRT1-OD16X Remote Output Adapter.

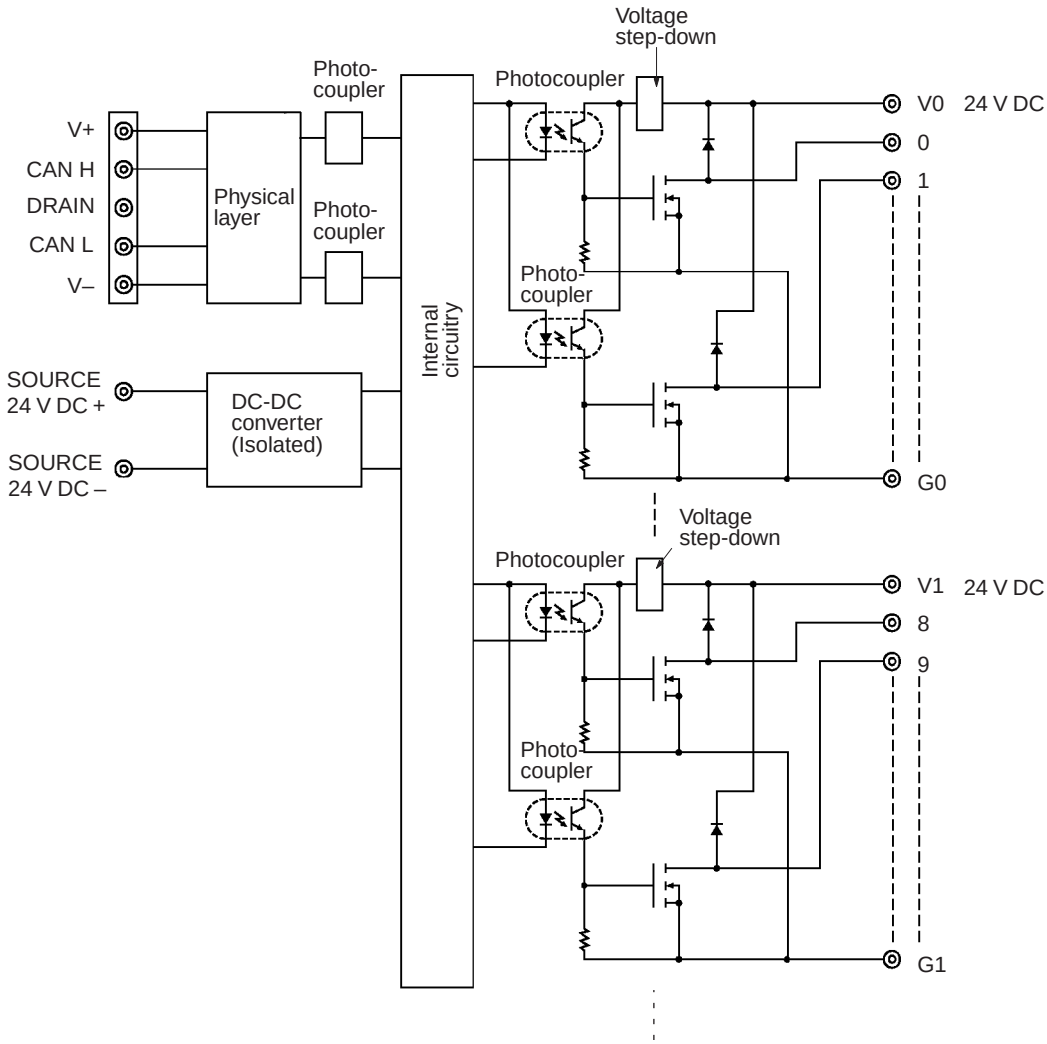

The following diagram shows the internal circuits for the DRT1-OD16X-1 Remote Output Adapter.

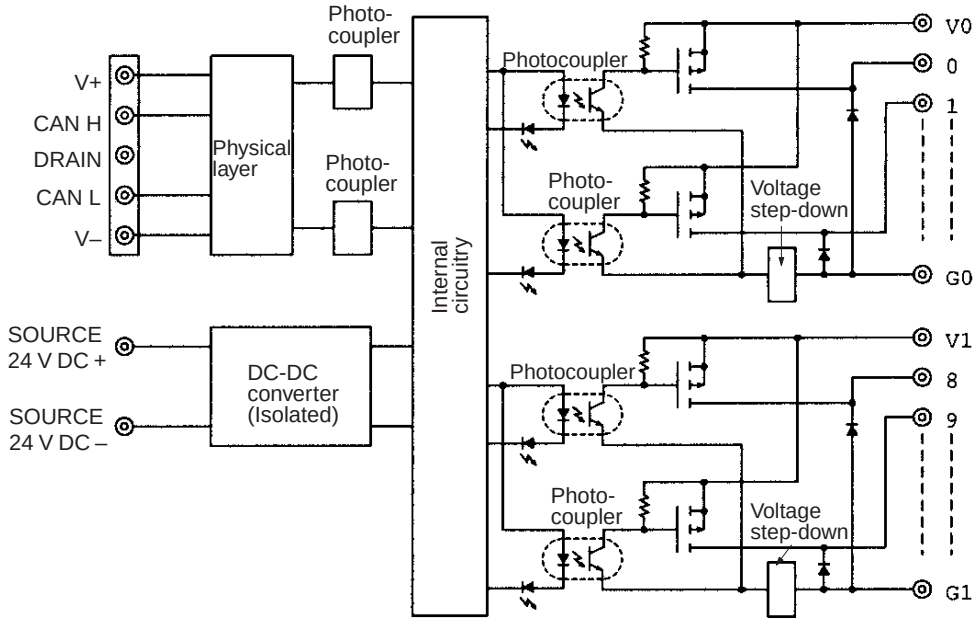

Wiring of the DRT1-OD16X (NPN)

Connector Pin Allocation

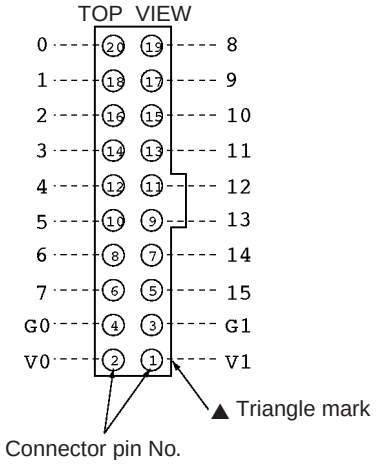

Internal Circuits Power Supply

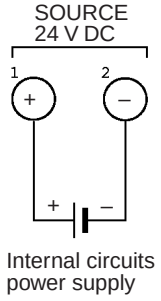

Output Devices

Use a printed circuit board to wire I/O devices to a flat cable MIL plug which can be connected to the Remote Adapter.

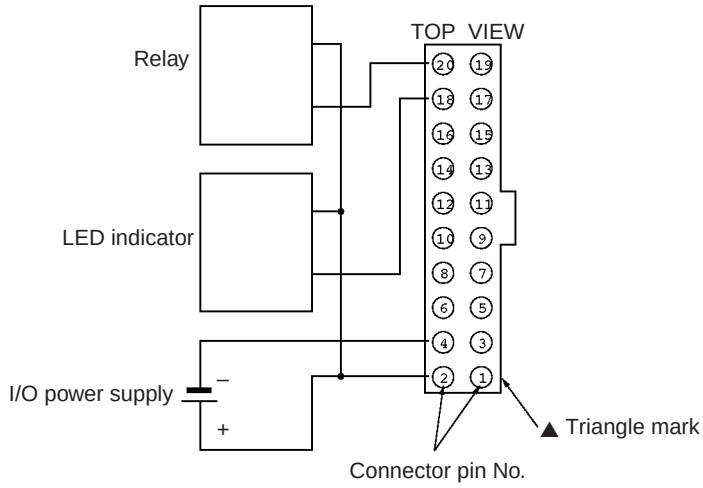

Note The G70D, NPN-output G7TC, and G70A can also be connected to the Remote Adapter, but the PNP-output G7TC and Input G7TC can't be connected because the power supply's polarity is reversed. (Reversing the power supply polarity can damage the Remote Adapter.)

Wiring of the DRT1-OD16X-1 (PNP)

Connector Pin Allocation

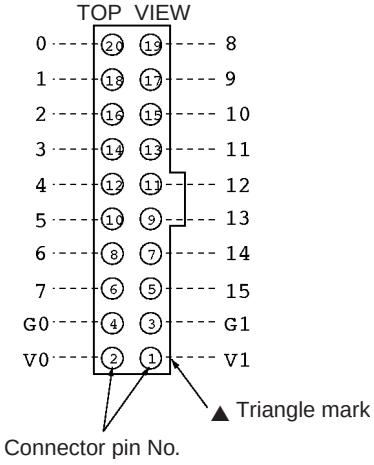

Internal Circuits Power Supply

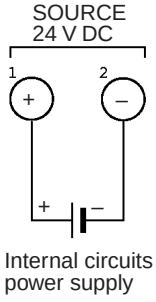

Output Devices

Use a printed circuit board to wire I/O devices to a flat cable MIL plug which can be connected to the Remote Adapter.

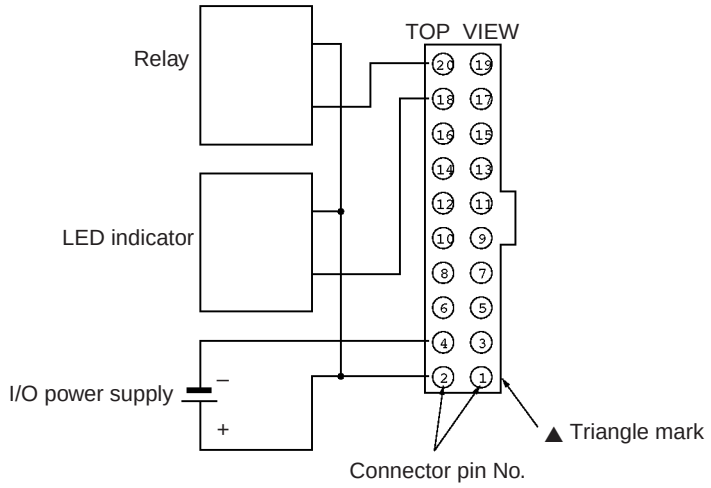

Note The G70D, NPN-output G7TC, and G70A can also be connected to the Remote Adapter, but the PNP-output G7TC and Input G7TC can't be connected because the power supply's polarity is reversed. (Reversing the power supply polarity can damage the Remote Adapter.)

Dimensions

The following diagram shows the dimensions for the DRT1-OD16X and DRT1-OD16X-1 Remote Output Adapters. All dimensions are in mm.

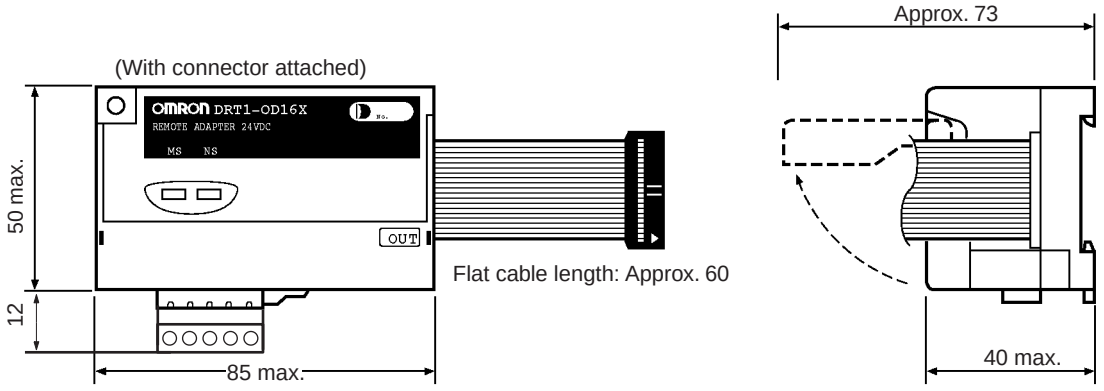

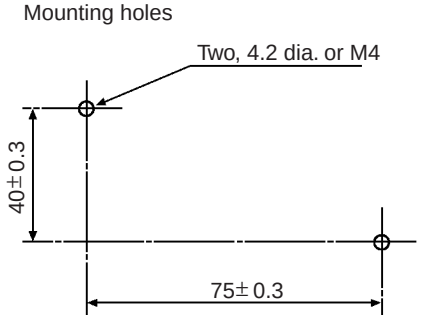

4-6-4 Mounting in Control Panels

Either of the following methods can be used to mount an Remote Adapter in a control panel.

Using Screws

Open mounting holes in the control panel according to the dimensions provided for mounting holes in the dimensions diagrams and then secure the Remote Adapter with M4 screws. The appropriate tightening torque is 0.6 to 0.98 N·m.

Using DIN Track

Mount the back of the Remote Adapter to a 35-mm DIN Track. To mount the Adapter, pull down on the mounting hook on the back of the Terminal with a screwdriver, insert the DIN Track on the back of the Terminal, and then secure the Terminal to the DIN Track. When finished, secure all Slaves on both ends of the DIN Track with End Plates.

Connecting End Plates

Hook the bottom of the End Plate onto the DIN Track, as shown at (1) in the following diagram, then hook the top of the End Plate as shown at (2).

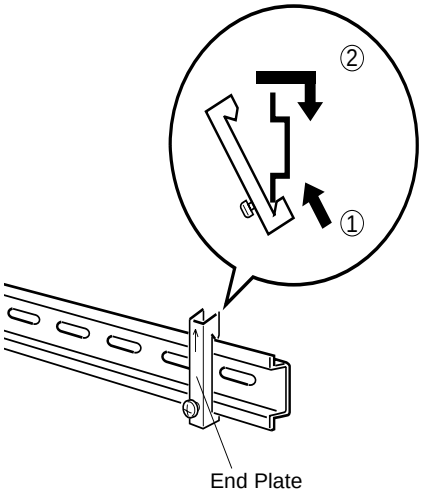

Note Always attach End Plate to both ends of Slaves connected to DIN Track.

Mounting Direction

Unless specific restrictions are given for the Slave, it can be mounted in any direction. Any of the following directions are okay.

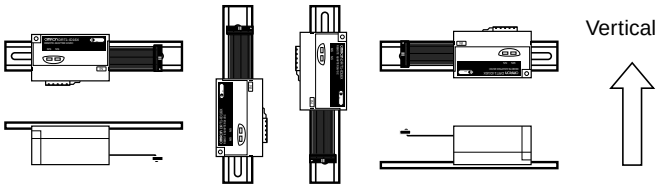

4-6-5 Wiring Internal Power Supplies, I/O Power Supplies, and I/O Lines

Wiring the I/O Power Supply

The internal circuit power supplies, I/O power supplies, and I/O lines are all wired to M3 screw terminals. Connect M3 crimp terminals and then connect them to the terminal block. Tighten the screws fixing the crimp terminals to a torque of 0.3 to 0.5 N·m.

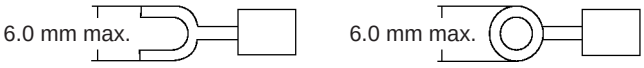

Refer to the wiring details for each Slave for information on the terminal arrangement at the terminal block. The following example shows the internal power supply for a DRT1-ID16X Remote Input Adapter.

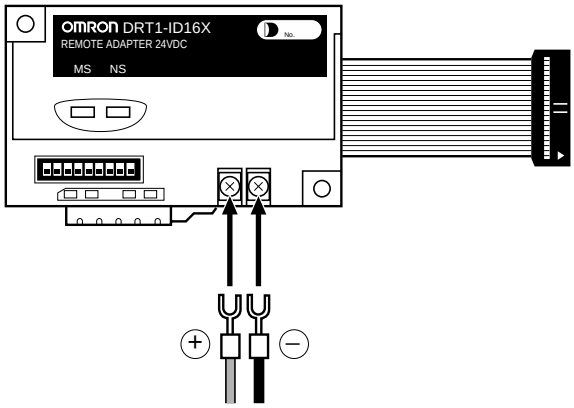

Wiring the I/O Power Supply

The I/O power supply and I/O are wired through the MIL socket on the I/O flat cable connector. An MIL connector for an I/O Relay Block or PCB can be connected.

Connecting to I/O Relay Blocks

The MIL socket on the flat cable connector on the Remote Adapter can be connected directly to the connector on an OMRON I/O Relay Block.The Remote Adapter-I/O Relay Block combinations that can be connected are listed in the following table.

Remote Adapter	I/O Relay Block
DRT1-ID16X	G7TC-ID16-5 G7TC-IA16-5
DRT1-OD16X	G7TC-OC08 G7TC-OC16 G70D-SOC16 G70D-FOM16 G70A-ZOC16-3

Note

1. Connection is also possible to manifold solenoid valves from Koganei or CKD.
2. The DRT1-ID16X-1 cannot be connected to an I/O Relay Block.

Connecting to PCB MIL Connectors

The MIL socket on the flat cable connector on the Remote Adapter can be connected to I/O devices connected to a PCB by connecting a MIL connector to the PCB. The PCB MIL connectors that can be used are listed in the following table.

MIL Connector	Remarks
XG4A-2031	DIP straight terminals
XG4A-2034	DIP right-angle terminals

4-7 Sensor Terminals

4-7-1 Node Address, Baud Rate, and Output Hold/Clear Settings

This section describes the Slaves' node address setting, baud rate settings, and hold/clear outputs for communications error setting. These settings are made using the following pins on the DIP switch.

Node address setting: Pins 1 through 6
Baud rate setting: Pins 7 and 8

Output hold/clear setting: Pin 10 on DIP switch on bottom panel (affects only outputs)

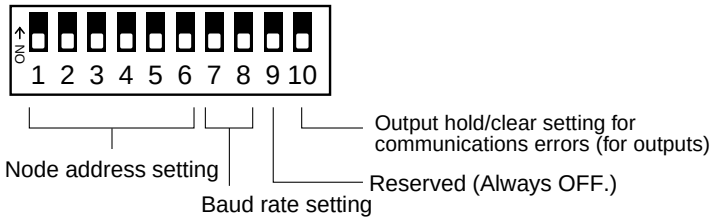

Node Address Settings

Each Slave's node address is set with pins 1 through 6 of the Slave's DIP switch. Any node address within the setting range can be used as long as it isn't already set on another node.

DIP switch setting						Node address
Pin 6	Pin 5	Pin 4	Pin 3	Pin 2	Pin 1	
0	0	0	0	0	0	0 (default)
0	0	0	0	0	1	1
0	0	0	0	1	0	2
⋮						⋮
1	1	1	1	0	1	61
1	1	1	1	1	0	62
1	1	1	1	1	1	63

0: OFF, 1: ON

Note

1. Refer to *Appendix A Node Address Settings Table* for a complete table of DIP switch settings.
2. The Slave won't be able to participate in communications if the same node address is used for the Master or another Slave node (node address duplication error).

Baud Rate Setting

Pins 7 and 8 are used to set the baud rate as shown in the following table. (These pins are factory-set to OFF.)

Pin 7	Pin 8	Baud rate
OFF	OFF	125 kbps (default)
ON	OFF	250 kbps
OFF	ON	500 kbps
ON	ON	Not allowed.

Note

1. Always turn OFF the Slave's power supply (including the communications power supply) before changing the baud rate setting.
2. Set the same baud rate on all of the nodes (Master and Slaves) in the Network. Any Slaves with baud rates different from the Master's rate won't be able to participate in communications. Furthermore, a node with an incor-

rect baud rate may cause communications errors between nodes with correct baud rate settings.

Setting Pins 9 and 10

The functions of pins 9 and 10 differ for inputs and outputs, as shown in the following diagram.

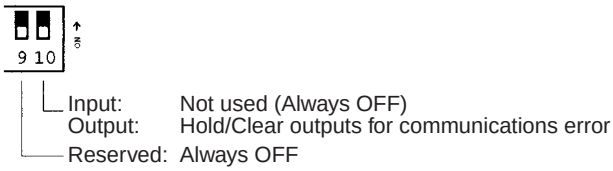

Pin 9: Reserved (Always OFF)

Pin 10: As follows:

Inputs: No function (Always OFF)
Outputs: Hold/Clear outputs for communications error
OFF (Clear): All output data from the Master will be cleared to 0 when a communications error occurs.
ON (Hold): All output data from the Master will be retained when a communications error occurs.

Pins 9 and 10 are factory-set to OFF.

4-7-2 Transistor Input Sensor Terminals with 16 Points: DRT1-HD16S

Input Specifications

Item	Specification
Input points	16 NPN points
ON voltage	12 V DC min. (between each input terminal and V_{CC}, the external sensor power supply)
OFF voltage	4 V DC max. (between each input terminal and V_{CC}, the external sensor power supply)
OFF current	1.0 mA max.
Input current	10 mA max./point
ON delay time	1.0 ms max.
OFF delay time	1.5 ms max.

Components

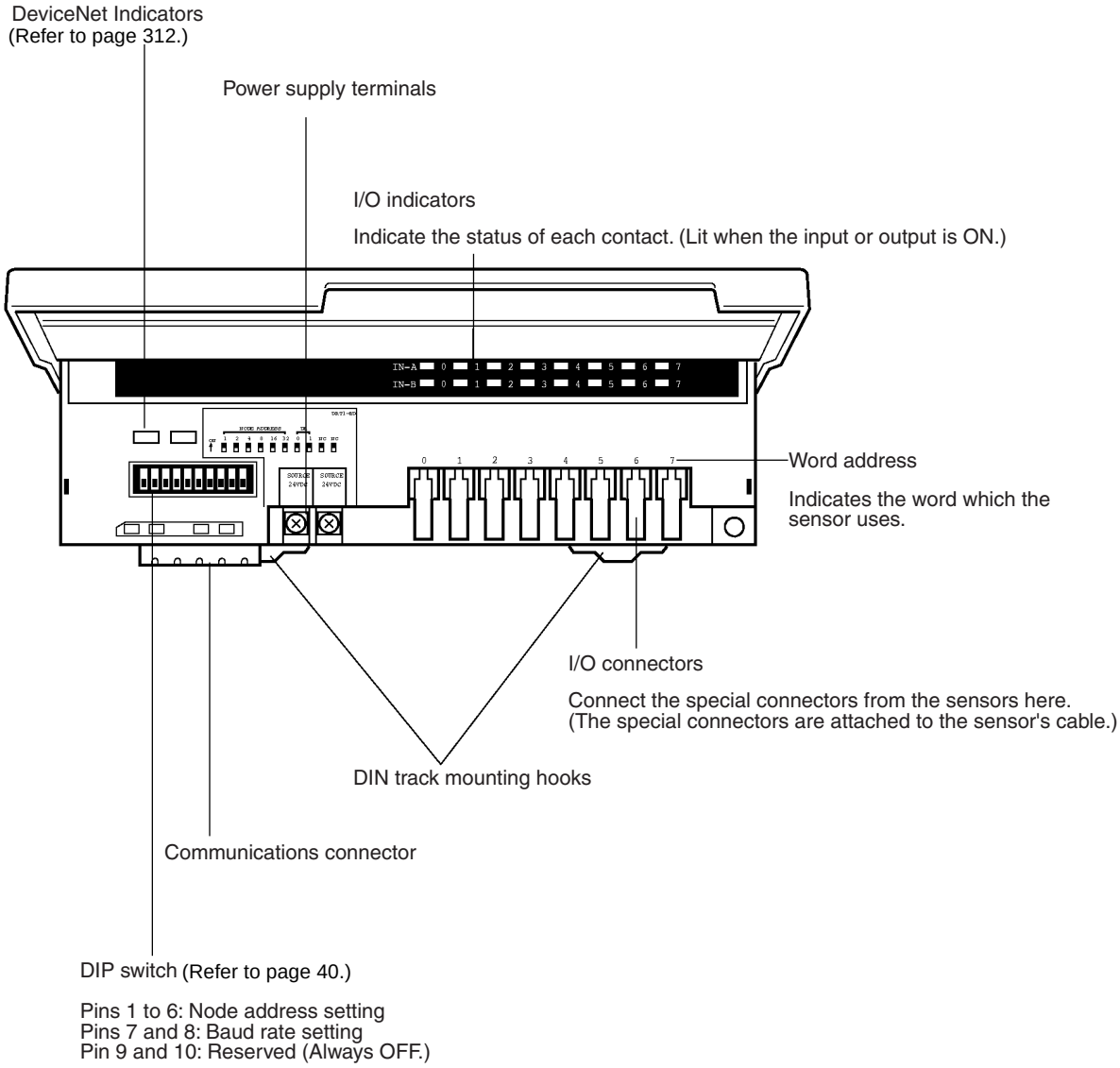
DeviceNet Indicators
(Refer to page 312.)
Power supply terminals
I/O indicators
Indicate the status of each contact. (Lit when the input or output is ON.)
IN-A 0 1 2 3 4 5 6 7
IN-B 0 1 2 3 4 5 6 7
0 1 2 3 4 5 6 7
Word address
Indicates the word which the sensor uses.
I/O connectors
Connect the special connectors from the sensors here.
(The special connectors are attached to the sensor's cable.)
DIN track mounting hooks
Communications connector
DIP switch (Refer to page 40.)
Pins 1 to 6: Node address setting
Pins 7 and 8: Baud rate setting
Pin 9 and 10: Reserved (Always OFF.)

Internal Circuits

The following diagram shows the internal circuits for the DRT1-HD16S Sensor Terminal.

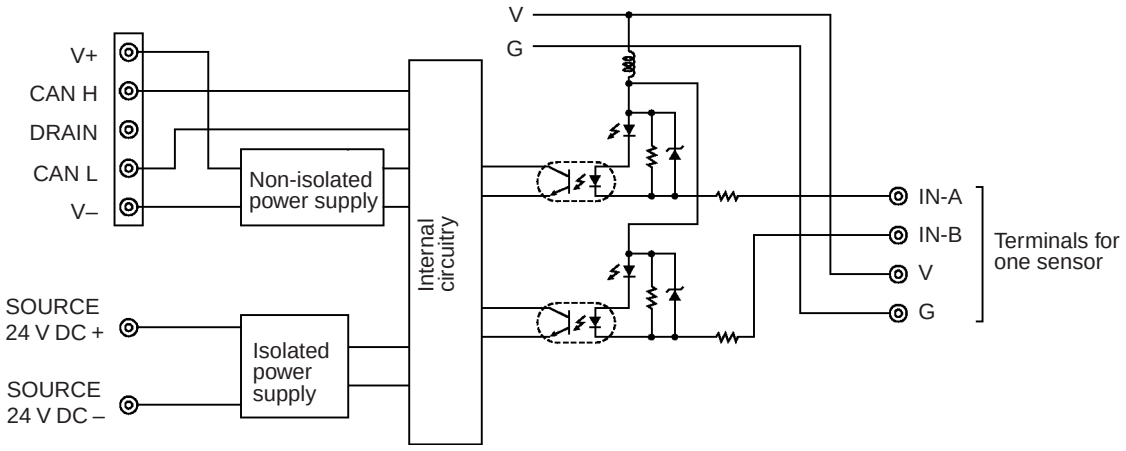

Wiring

Terminal Arrangement and Wiring for the Sensor Terminal's Connector

Pin	Function
1	IN-A (inputs)
2	IN-B (inputs)
3	V_{CC} (V) (external sensor power supply, +terminal)
4	GND (G) (external sensor power supply, –terminal)

The bit in the DeviceNet I/O area depends on the word address where the sensor is connected, as shown in the following table.

Word address	IN-A bit	IN-B bit
0	0	8
1	1	9
2	2	10
3	3	11
4	4	12
5	5	13
6	6	14
7	7	15

Wiring Example

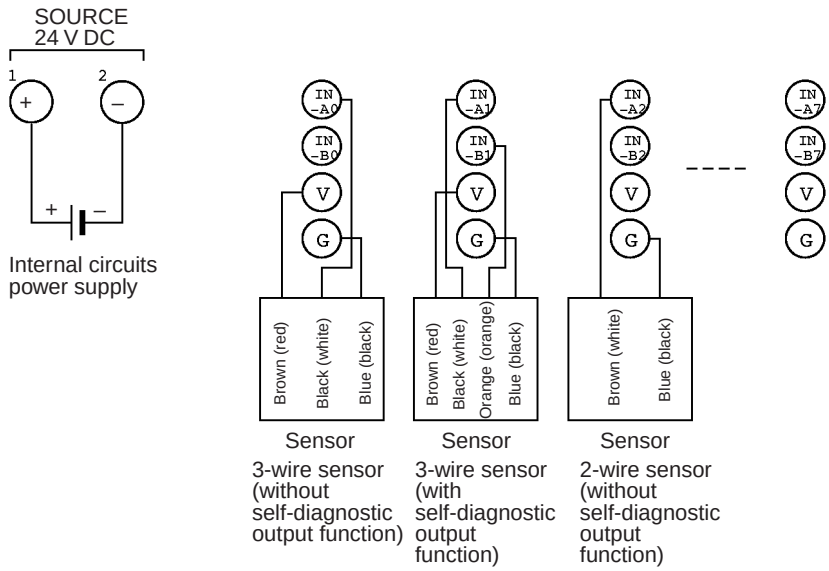

Note In accordance with the changes in the standards for photoelectric sensors and proximity sensors, wire colors have been changed. Colors in parentheses are the old wire colors.

Dimensions

The following diagram shows the dimensions for the DRT1-HD16S Input Sensor Terminal. All dimensions are in mm.

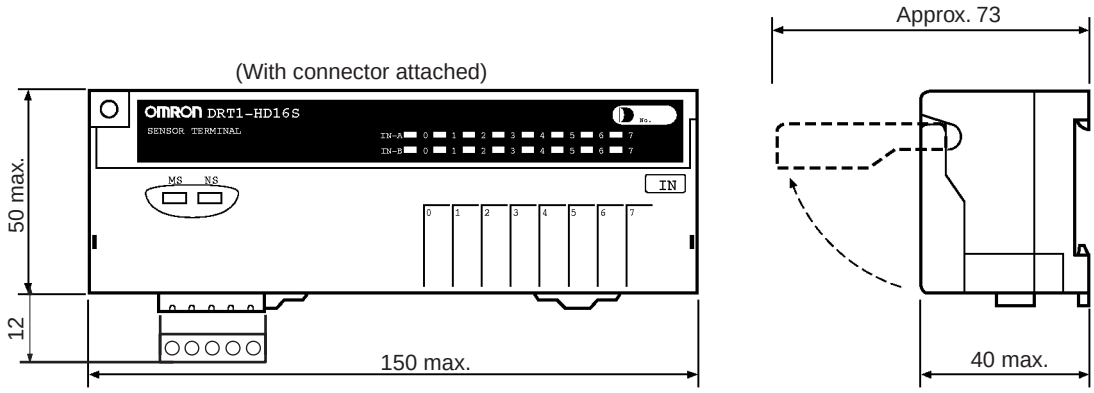

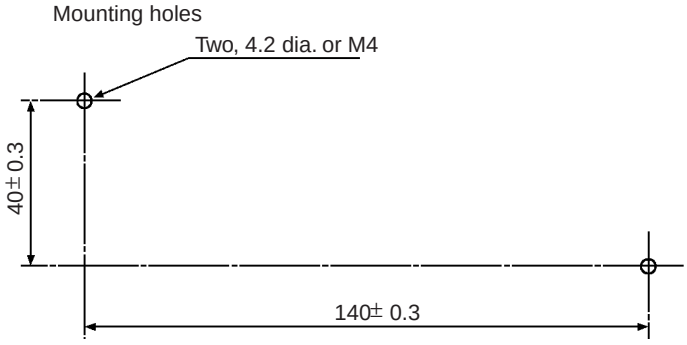

4-7-3 Transistor I/O Sensor Terminals with 8 Inputs and 8 Outputs: DRT1-ND16S

Specifications

Input Specifications

Item	Specification
Input points	8 NPN points
ON voltage	12 V DC min. (between each input terminal and V_{CC}, the external sensor power supply)
OFF voltage	4 V DC max. (between each input terminal and V_{CC}, the external sensor power supply)
OFF current	1.0 mA max.
Input current	10 mA max./point
ON delay time	1.0 ms max.
OFF delay time	1.5 ms max.

Output Specifications

Item	Specification
Output points	8 NPN points
Rated output current	20 mA max.
Residual voltage	1 V max.
Leakage current	0.1 mA max.

Components

DeviceNet Indicators
(Refer to page 312.)

Power supply terminals

I/O indicators

Indicate the status of each contact. (Lit when the input or output is ON.)

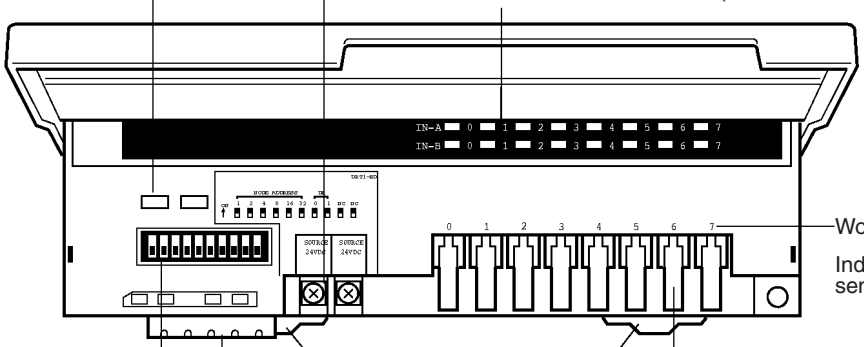

Word address

Indicates the word which the sensor uses.

I/O connectors

Connect the special connectors from the sensors here.
(The special connectors are attached to the sensor's cable.)

DIN track mounting hooks

Communications connector

DIP switch (Refer to page 40.)

Pins 1 to 6: Node address setting
Pins 7 and 8: Baud rate setting
Pin 9: Reserved (Always OFF.)
Pin 10: Hold/clear outputs for communications error

Internal Circuits

The following diagram shows the internal circuits for the DRT1-ND16S Sensor Terminal.

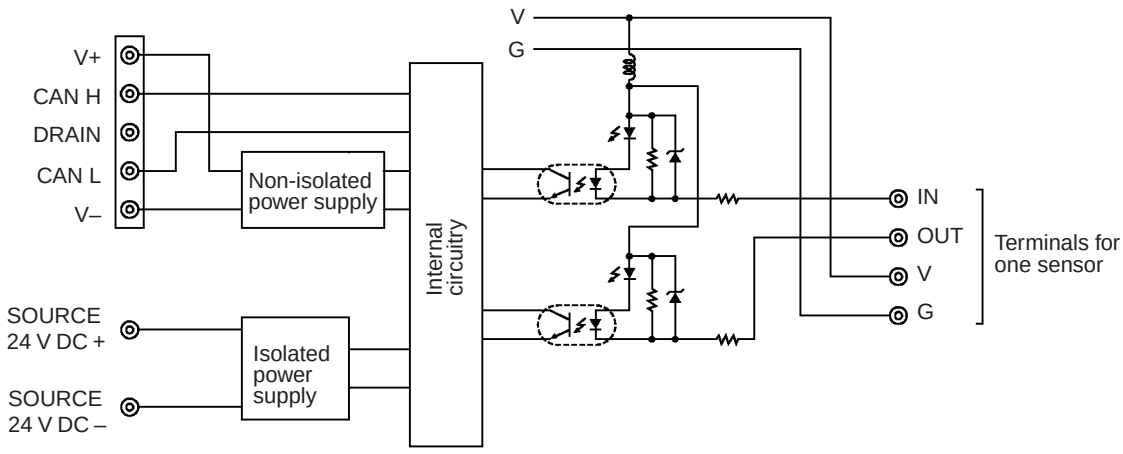

Wiring

Terminal Arrangement and Wiring for the Sensor Terminal's Connector

Pin	Function
1	IN (inputs)
2	OUT (outputs)
3	V_{CC} (V) (external sensor power supply, +terminal)
4	GND (G) (external sensor power supply, –terminal)

The bit in the DeviceNet I/O area depends on the word address where the sensor is connected, as shown in the following table.

Word address	IN-A bit	IN-B bit
0	0	8
1	1	9
2	2	10
3	3	11
4	4	12
5	5	13
6	6	14
7	7	15

Wiring Example

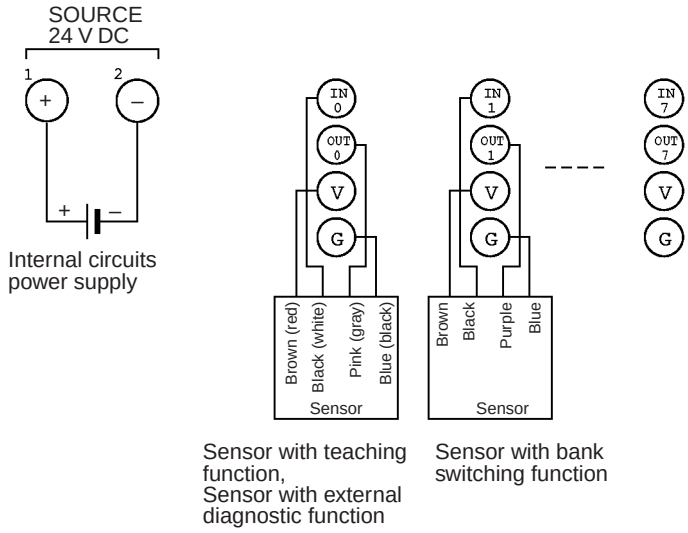

Note In accordance with the changes in the standards for photoelectric sensors and proximity sensors, wire colors have been changed. Colors in parentheses are the old wire colors.

Dimensions

The following diagram shows the dimensions for the DRT1-ND16S Sensor Terminal. All dimensions are in mm.

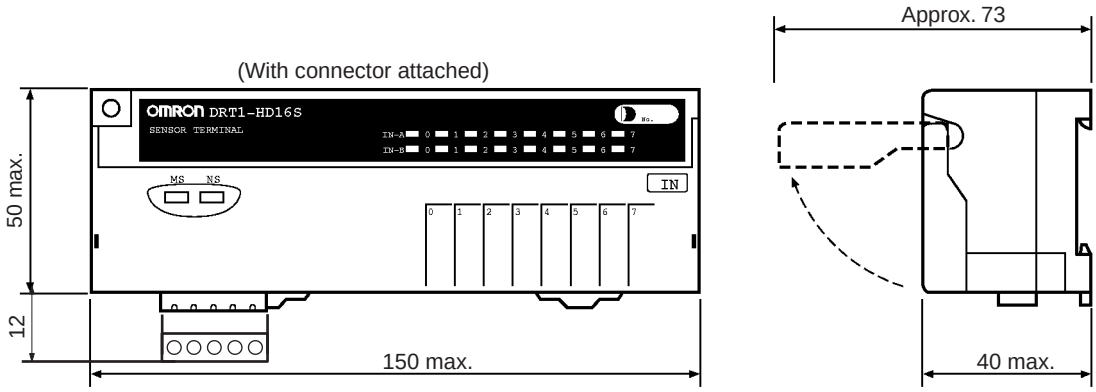

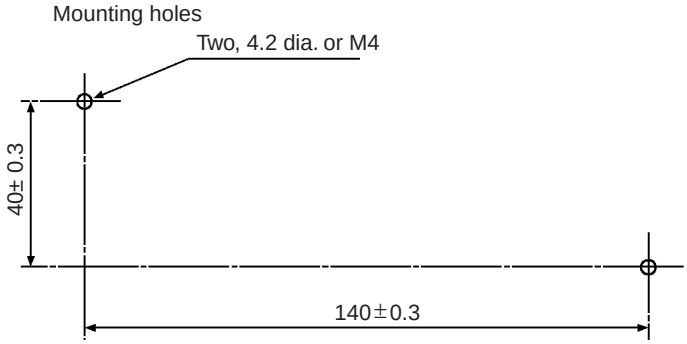

4-7-4 Mounting in Control Panels

Either of the following methods can be used to mount an Sensor Terminal in a control panel.

Using Screws

Open mounting holes in the control panel according to the dimensions provided for mounting holes in the dimensions diagrams and then secure the Sensor Terminal with M4 screws. The appropriate tightening torque is 0.6 to 0.98 N·m.

Using DIN Track

Mount the back of the Remote Adapter to a 35-mm DIN Track. To mount the Adapter, pull down on the mounting hook on the back of the Terminal with a screwdriver, insert the DIN Track on the back of the Terminal, and then secure the Terminal to the DIN Track. When finished, secure all Slaves on both ends of the DIN Track with End Plates.

Connecting End Plates

Hook the bottom of the End Plate onto the DIN Track, as shown at (1) in the following diagram, then hook the top of the End Plate as shown at (2).

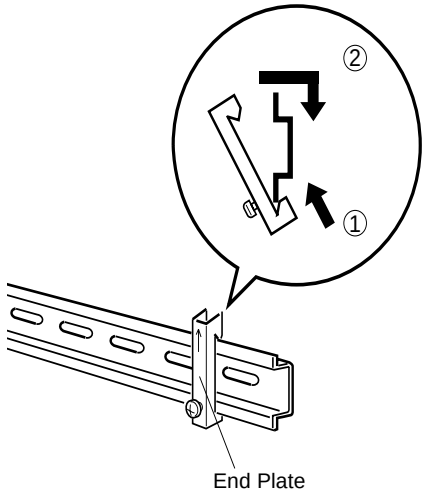

Note Always attach End Plate to both ends of Slaves connected to DIN Track.

Mounting Direction

Unless specific restrictions are given for the Slave, it can be mounted in any direction. Any of the following directions are okay.

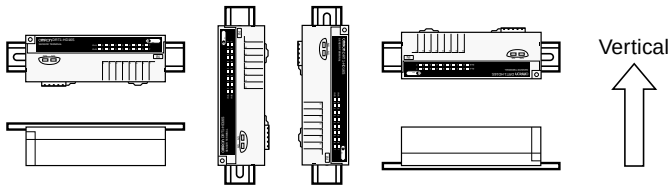

4-7-5 Wiring Internal Power Supplies, I/O Power Supplies, and I/O Lines

Wiring the I/O Power Supply

The internal circuit power supplies, I/O power supplies, and I/O lines are all wired to M3 screw terminals. Connect M3 crimp terminals and then connect them to the terminal block. Tighten the screws fixing the crimp terminals to a torque of 0.3 to 0.5 N·m.

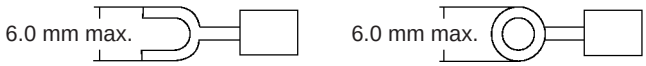

Refer to the wiring details for each Slave for information on the terminal arrangement at the terminal block. The following example shows the internal power supply for a DRT1-HD16S Remote I/O Terminal.

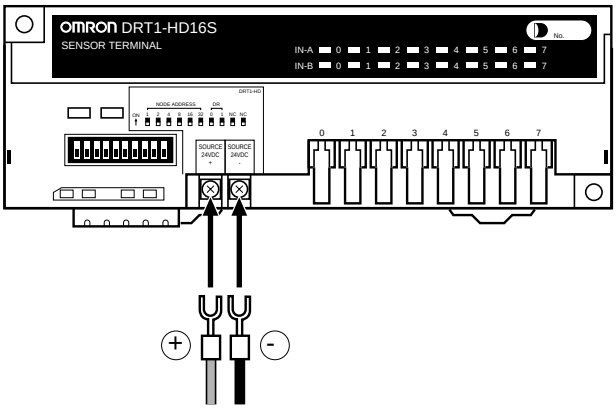

Wiring the I/O Power Supply and I/O Terminals

The I/O power supply and I/O wiring are connected through the cables of the sensors and other external devices with cable connectors.

Assembling Cable Connectors

Use the following information to connect the Cable Connectors to the cables on the sensors or other external devices.

- Cable Connectors

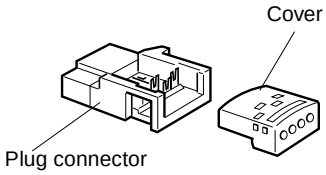

Confirming the Cable Connector and Cable Core Wire Size

There are two models of Cable Connector that vary in the applicable cable core wire size.

Model	Marking	Applicable core wire size
XS8A-0441	XS8-1	0.3 to 0.5 mm^2
XS8A-0442	XS8-2	0.14 to 0.2 mm^2

Confirm that the Cable Connector is the correct one for the core wire of the sensor or other external device. Set the same baud rate on all of the nodes

The plug connector of the Connector Cable is marked to identify it.

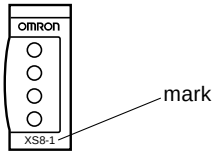

Preparing the Sensor or External Device Cable

The cable from the sensor or external device (with a connector output transistor) is normally either stripped or semi-stripped.

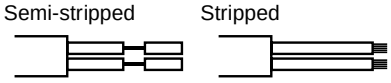

The wires cannot be connected in this condition. Cut the stripped portion of wire off and then remove the sheath as shown in the following illustration. Do not strip the core wires.

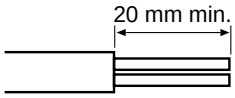

Inserting Core Wires in the Cable Connector

When connecting the sensor, align the senor wires by color with the terminal numbers printed on the cover according to the following tables.

- DRT1-HD16S

Terminal number	3-wire sensor (without self-diagnosis output)	2-wire sensor (without self-diagnosis output)	3-wire sensor (without self-diagnosis output)
1	Black (white)	Brown (white)	Black (white)
2	---	---	Orange (orange)
3	Brown (red)	---	Brown (red)
4	Blue (black)	Blue (black)	Blue (black)

- DRT1-ND16S

Terminal number	Sensor with teaching function or with self-diagnosis output	Sensor with bank switching function
1	Black (white)	Black
2	Pink (gray)	Purple
3	Brown (red)	Brown
4	Blue (black)	Blue

Note Wire colors in parentheses are the previous JIS colors for photoelectric and proximity sensors.

Insert the core wires completely to the back of the cover holes.

Assembling the Cable Connectors

1,2,3...

1. Confirm that the core wires and terminal number are aligned properly using the wire colors. Also be sure that the wires are inserted completely to the back of the cover. (The Cover is transparent so that the wires can be easily seen.)
2. As shown in the following diagram, press the covers with the cable wires inserted into it into the plug connector using your hands to temporarily attach it.

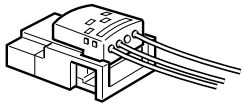

3. As shown in the following diagram, use pliers or a similar tool to press the cover completely into the plug connector. Press on the center of the cover

so that you do not distort it. Press the cover in until there is no gap between the cover and connector plug.

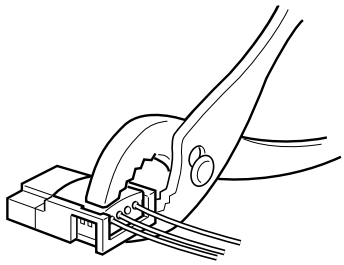

Connecting and Disconnecting the Cable Connector

Connecting

With terminal number 1 toward the front, insert the Cable Connector into the I/O connector on the Slave until it clicks into place.

Disconnecting

Lift up on the lock lever as shown in the following diagram and remove the Cable Connector to disconnect it.

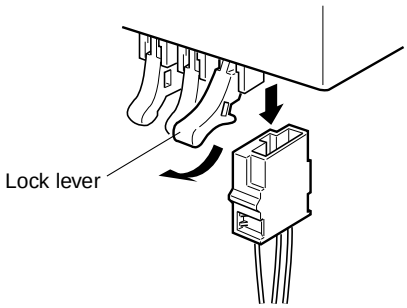

Note Cable Connectors (XS8A-0441/0442) are not provided with the Sensor Terminals and must be purchased separately.

4-8 Analog I/O Terminals

4-8-1 Node Address and Baud Rate Setting

This section describes the Slaves' node address setting, baud rate settings, and hold/clear outputs for communications error setting. These settings are made using the following pins on the DIP switch.

Node address setting: Pins 1 through 6
Baud rate setting: Pins 7 and 8
Slave-specific setting: Pins 9 and 10
(Refer to the descriptions of individual Slaves.)

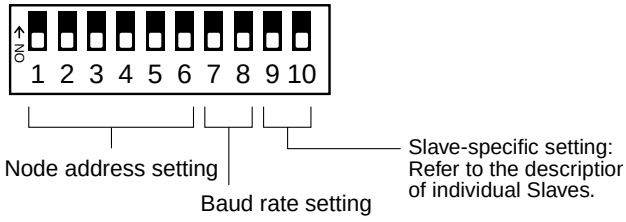

Node Address Settings

Each Slave's node address is set with pins 1 through 6 of the Slave's DIP switch. Any node address within the setting range can be used as long as it isn't already set on another node.

DIP switch setting						Node address
Pin 6	Pin 5	Pin 4	Pin 3	Pin 2	Pin 1	
0	0	0	0	0	0	0 (default)
0	0	0	0	0	1	1
0	0	0	0	1	0	2
⋮						⋮
1	1	1	1	0	1	61
1	1	1	1	1	0	62
1	1	1	1	1	1	63

0: OFF, 1: ON

Note

1. Refer to *Appendix A Node Address Settings Table* for a complete table of DIP switch settings.
2. The Slave won't be able to participate in communications if the same node address is used for the Master or another Slave node (node address duplication error).

Baud Rate Setting

Pins 7 and 8 are used to set the baud rate as shown in the following table. (These pins are factory-set to OFF.)

Pin 7	Pin 8	
OFF	OFF	125 kbps (default)
ON	OFF	250 kbps
OFF	ON	500 kbps
ON	ON	Not allowed.

Note

1. Always turn OFF the Slave's power supply (including the communications power supply) before changing the baud rate setting.
2. Set the same baud rate on all of the nodes (Master and Slaves) in the Network. Any Slaves with baud rates different from the Master's rate won't be able to participate in communications. Furthermore, a node with an incorrect baud rate may cause communications errors between nodes with correct baud rate settings.

4-8-2 Analog Input Terminals: DRT1-AD04 and DRT1-AD04H

Specifications

General Specifications

Item	Specification			
	DRT1-AD04		DRT1-AD04H	
	Voltage inputs	Current inputs	Voltage inputs	Current inputs
Input points	Either 4 points or 2 points (Set with the DIP switch.) (Master Unit uses 4 input words or 2 input words respectively)		4 points (Four input words occupied at Master Unit.)	
Communications power supply voltage	11 to 25 V DC (supplied from the communications connector)			
Internal power supply voltage	20.4 to 26.4 V DC (24 V DC –15% to 10%)			

Item		Specification			
		DRT1-AD04		DRT1-AD04H	
		Voltage inputs	Current inputs	Voltage inputs	Current inputs
Current consumption		Communications: 30 mA max. Internal circuit: 80 mA max.		Communications: 30 mA max. Internal circuit: 130 mA max.	
Noise immunity		±1.5 $kV_{p-p,}$ pulse width: 0.1 to 1 µs, pulse rise time: 1 ns (via noise simulator)			
Vibration resistance		10 to 55 Hz, 1.0-mm double amplitude			
Shock resistance		200 m/s^2			
Dielectric strength		500 V AC for 1 min (between insulated circuits)		500 V AC (between insulated circuits)	
Insulation resistance		20 MΩ min. at 250 V DC (between insulated circuits)			
Ambient operating temperature		0 to 55°C			
Ambient operating humidity		35% to 85% (with no condensation)			
Ambient operating environment		No corrosive gases.			
Ambient storage temperature		–25 to 65°C			
Mounting method		M4 screw mounting or 35-mm DIN track mounting			
Mounting strength		50 N 10 N min. in the DIN Track direction			
Terminal strength		Pull: 50 N			
Weight		160 g max.			
Input signal range		0 to 5 V, 1 to 5 V, 0 to 10 V, or –10 to 10 V	0 to 20 mA or 4 to 20 mA	0 to 5 V, 1 to 5 V or 0 to 10 V,	0 to 20 mA or 4 to 20 mA
Max. signal input		±15 V	±30 mA	±15 V	±30 mA
Input impedance		1 MΩ min.	Approx. 250 Ω	1 MΩ min.	Approx. 250 Ω
Resolution		1/6000 (full scale)		1/30000 (full scale)	
Accuracy	25°C	±0.3% FS	±0.4% FS	±0.3% FS	±0.4% FS
	0 to 55°C	±0.6% FS	±0.8% FS	±0.6% FS	±0.8% FS
Conversion time		2 ms/input (8 ms/4 points, 4 ms/2 points)		250 ms/4 points	
Converted output data (Binary)		Binary (4-digit hexadecimal) –10- to 10-V range: 8BB8 to 0 to 0BB8 full scale Other signal ranges: 0000 to 1770 full scale		Binary (4-digit hexadecimal) 0000 to 7530 (hexadecimal) full scale	
Averaging function		Settable (via DIP switch)		Not provided.	
Open circuit detection		Provided.		Provided.	
Isolation method		Photocoupler isolation between analog inputs and communications lines (There is no isolation between analog input signals.)		Photocoupler isolation between analog inputs and communications lines Photocoupler isolation between analog input signals.	

Components of the DRT1-AD04 and DRT1-AD04H

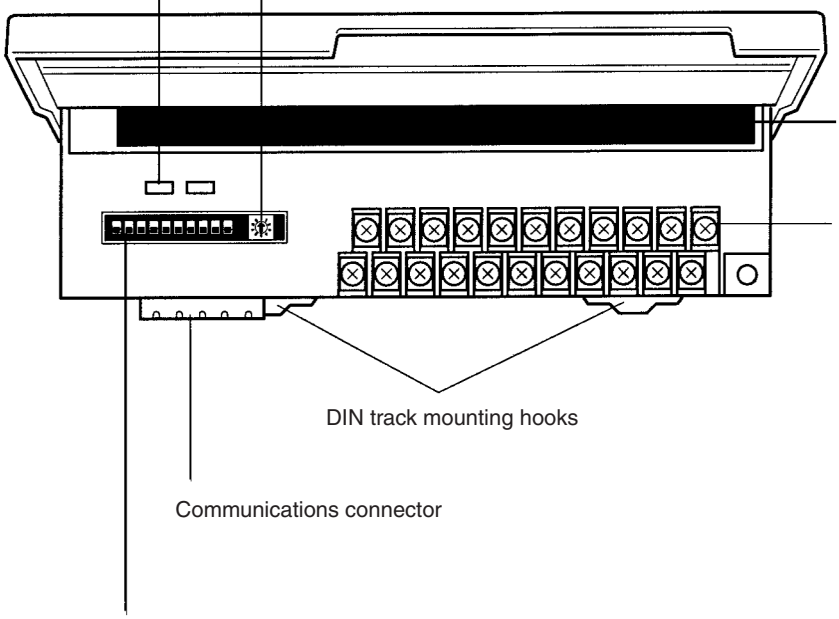

Pins 1 to 6: Node address setting (Refer to page 124.)
Pins 7 and 8: Baud rate setting (Refer to page 124.)
Pin 9: Number of inputs setting (4 points or 2 points) [DRT1-AD04 only] (Refer to page 146.)
Pin 10: Averaging function setting [DRT1-AD04 only] (Refer to page 147.)

DIP Switch Settings

The following diagram shows the functions of the DIP switch on the DRT1-AD04 and DRT1-AD04H Analog Input Terminals.

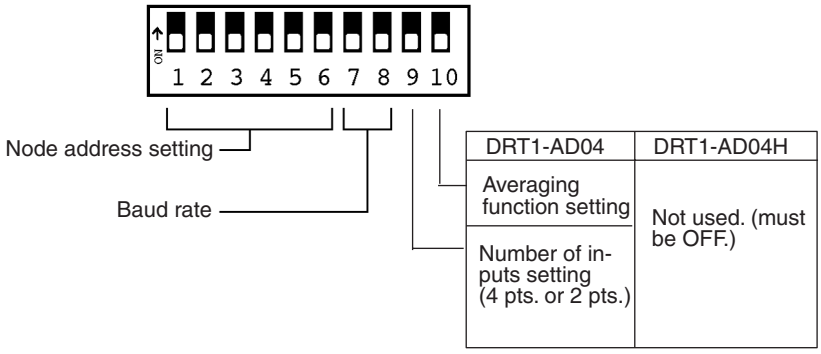

The following table summarizes the DIP switch settings. (All pins are factory-set to OFF.)

Pin(s)	Function	Settings	Setting contents	
			DRT1-AD04	DRT1-AD04H
1 through 6	Node address setting	Refer to *4-8-1 Node Address and Baud Rate Setting* for details. (Factory-set to OFF.)		
7 and 8	Baud rate			
9	Number of inputs setting (2 or 4) (See page 146 for details.)	OFF*	4 points	Not used. (Must be OFF.)
		ON	2 points	
10	Averaging function (See page 147 for details.)	OFF*	Averaging is not performed. (Factory setting)	Not used. (Must be OFF.)
		ON	Averaging is performed.	

* Factory settings.

Note Always turn OFF the Slave's power supply (including the communications power supply) before changing any settings.

Rotary Switch Setting

Set the input signal range for each input with the rotary switch. Inputs 0 and 2 share the same signal range, as do inputs 1 and 3.
The voltage input/current input selection is carried out by connecting the V+ terminal to the I+ terminal. Short-circuit the V+ terminal and I+ terminal when inputting current.

Note Always turn OFF the Slave's power supply (including the communications power supply) before changing any settings.

DRT1-AD04

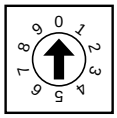

The following table shows the rotary switch settings and corresponding input signal range settings.

No.	Signal range for inputs 0 and 2	Signal range for inputs 1 and 3
0	0 to 5 V or 0 to 20 mA	0 to 5 V or 0 to 20 mA
1	0 to 5 V or 0 to 20 mA	1 to 5 V or 4 to 20 mA
2	0 to 5 V or 0 to 20 mA	0 to 10 V
3	0 to 5 V or 0 to 20 mA	–10 to +10 V
4	1 to 5 V or 4 to 20 mA	1 to 5 V or 4 to 20 mA
5	1 to 5 V or 4 to 20 mA	0 to 10 V
6	1 to 5 V or 4 to 20 mA	–10 to +10 V
7	0 to 10 V	0 to 10 V
8	0 to 10 V	–10 to +10 V
9	–10 to +10 V	–10 to +10 V

DRT1-AD04H

The following table shows the rotary switch settings and corresponding input signal range settings.

No.	Signal range for inputs 0 and 2	Signal range for inputs 1 and 3
0	0 to 5 V	0 to 5 V
1	0 to 5 V	1 to 5 V
2	0 to 5 V	0 to 10 V
3	0 to 5 V	0 to 20 mA
4	0 to 5 V	4 to 20 mA
5	1 to 5 V	1 to 5 V
6	1 to 5 V	0 to 10 V
7	1 to 5 V	0 to 20 mA
8	1 to 5 V	4 to 20 mA
9	0 to 10 V	0 to 10 V
A	0 to 10 V	0 to 20 mA
B	0 to 10 V	4 to 20 mA
C	0 to 20 mA	0 to 20 mA
D	0 to 20 mA	4 to 20 mA
E	4 to 20 mA	4 to 20 mA
F	(Cannot be set.)	

Internal Circuits

The following diagram shows the internal circuits for the DRT1-AD04 Analog Input Terminal.

DRT1-AD04

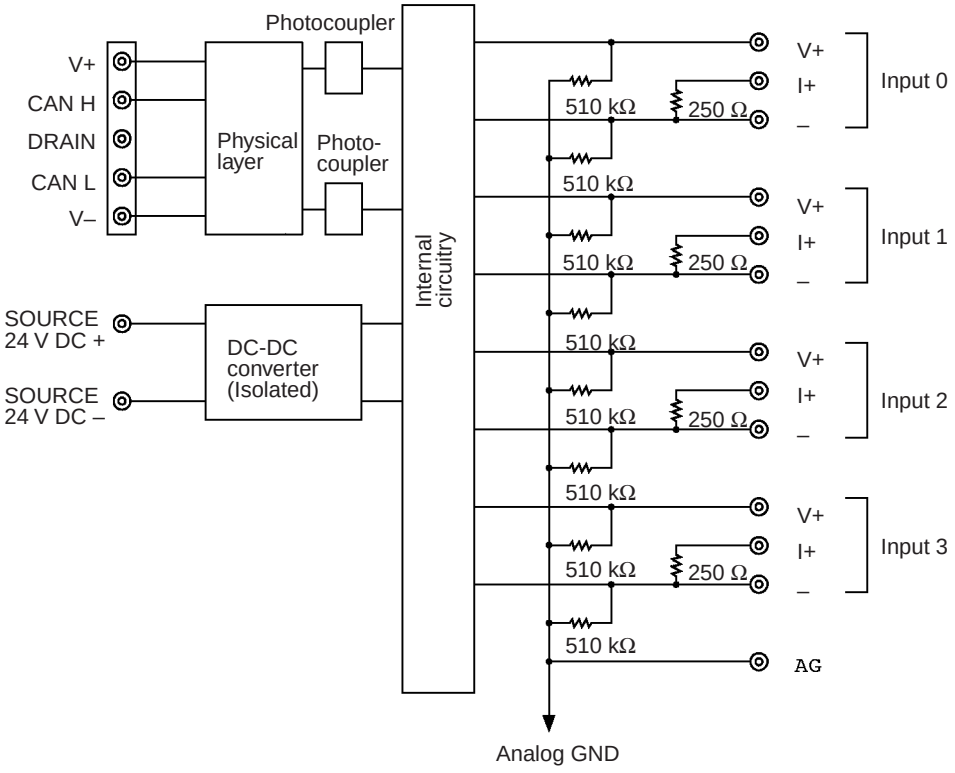

Note The DRT1-AD04H has insulation between the inputs, so there is no need for the user to be concerned with the internal circuitry.

Terminal Arrangement

DRT1-AD04

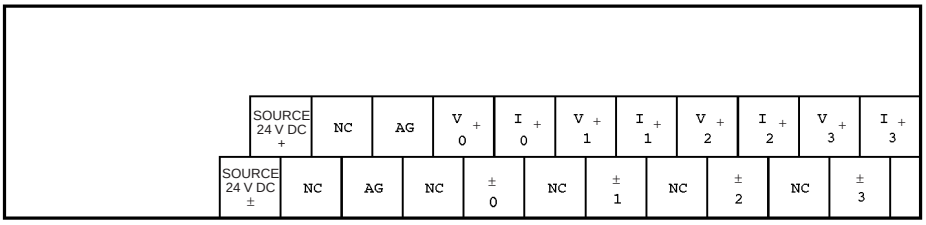

DRT1-AD04H

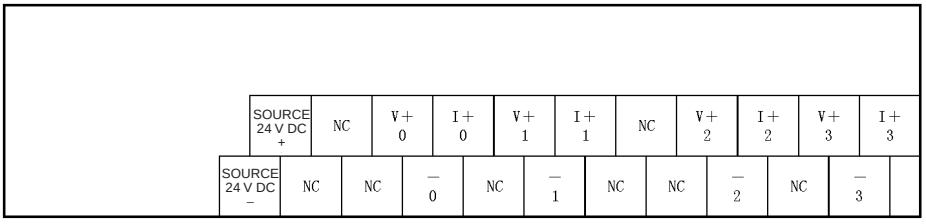

Wiring: DRT1-AD04 and DRT1-AD04 H (Common)

Connect the power supply and inputs (voltage input or current input) to the Analog Input Terminal's terminal block as shown in the following diagram.

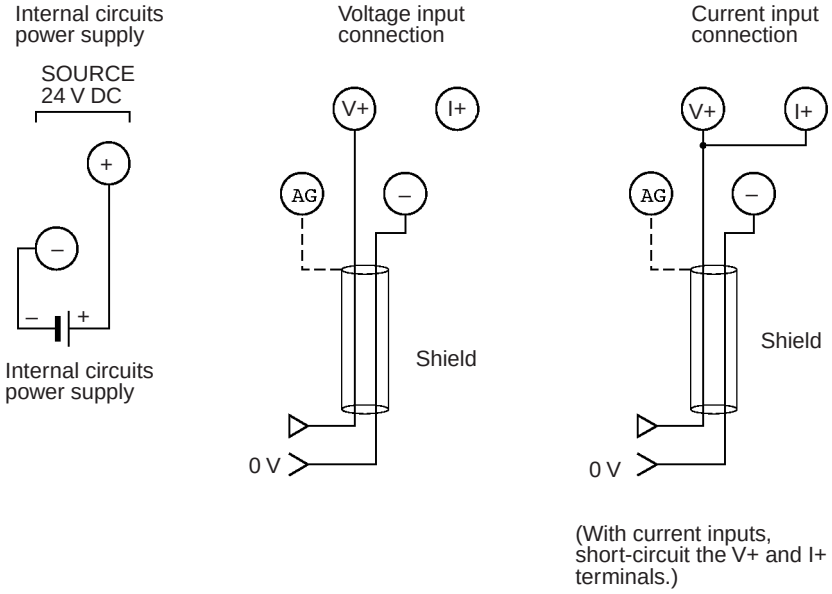

Do not connect the shield when using shielded cables for the inputs.

Input Ranges and Converted Data

The Analog Input Terminal converts analog input data to digital values. The digital values depend on the input signal ranges, as shown in the following diagrams.

Note When the input exceeds the specified range, the AD conversion data will be fixed at either the lower limit or upper limit.

DRT1-AD04

–10- to 10-V Inputs

The –10- to 10-V range corresponds to the hexadecimal values 8BB8 to 0BB8 (–3000 to 3000). The most significant bit (bit 15) is set to 1 (ON) for negative values and the AD conversion data is set to the absolute values; the rest of the word indicates the absolute value. The entire data range is 8CE4 to 0CE4 (–3300 to 3300).

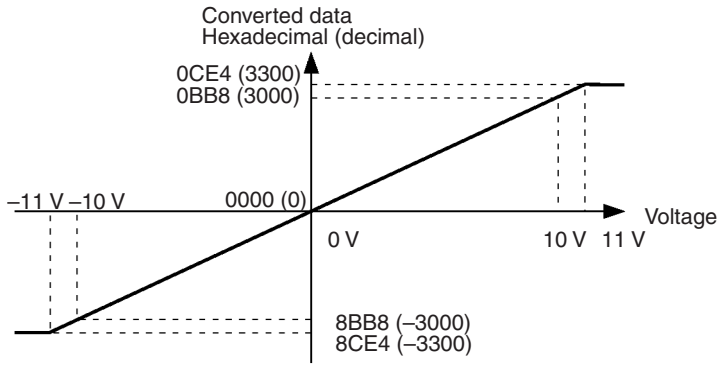

0- to 10-V Inputs

The 0- to 10-V range corresponds to the hexadecimal values 0000 to 1770 (0 to 6000). The most significant bit (bit 15) is set to 1 (ON) for negative values and the AD conversion data is set to the absolute values; the rest of the word indicates the absolute value. The entire data range is 812C to 189C (–300 to 6300).

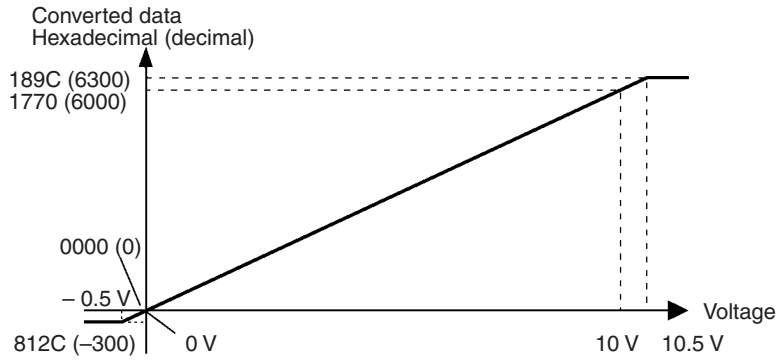

0- to 5-V Inputs

The 0- to 5-V range corresponds to the hexadecimal values 0000 to 1770 (0 to 6000). The most significant bit (bit 15) is set to 1 (ON) for negative values and the AD conversion data is set to the absolute values; the rest of the word indicates the absolute value. The entire data range is 812C to 189C (–300 to 6300).

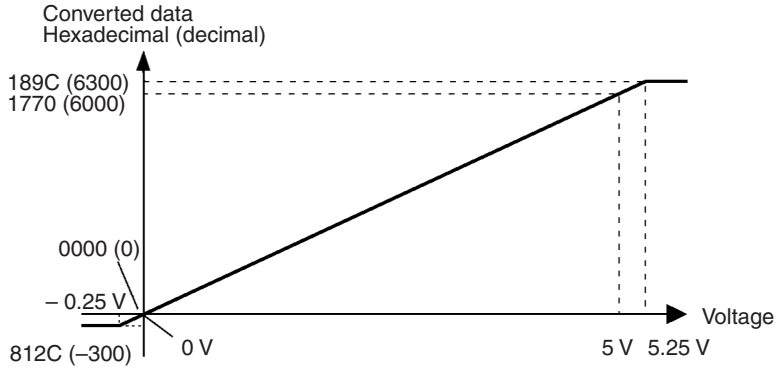

1- to 5-V Inputs

The 1- to 5-V range corresponds to the hexadecimal values 0000 to 1770 (0 to 6000). The most significant bit (bit 15) is set to 1 (ON) for voltages from 0.8 V to 1 V and the AD conversion data is set to the absolute values; the rest of the word indicates the absolute value. The entire data range is 812C to 189C (–300 to 6300). If the input voltage falls below 0.8 V, the open-circuit detection function is activated and the converted data is set to FFFF.

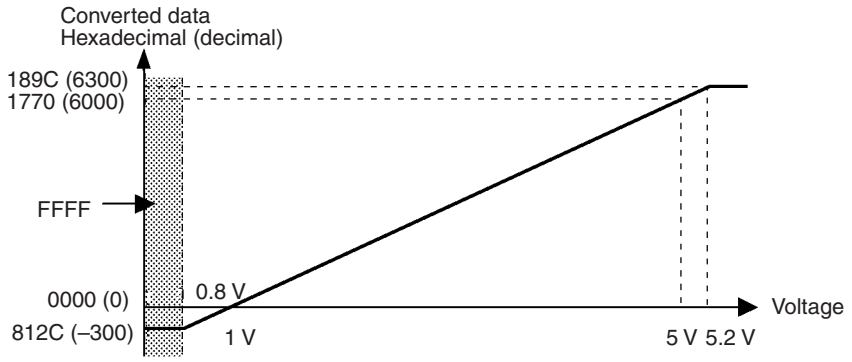

0- to 20-mA Inputs

The 0- to 20-mA range corresponds to the hexadecimal values 0000 to 1770 (0 to 6000). The most significant bit (bit 15) is set to 1 (ON) for negative values and the AD conversion data is set to the absolute values; the rest of the word indicates the absolute value. The entire data range is 812C to 189C (–300 to 6300).

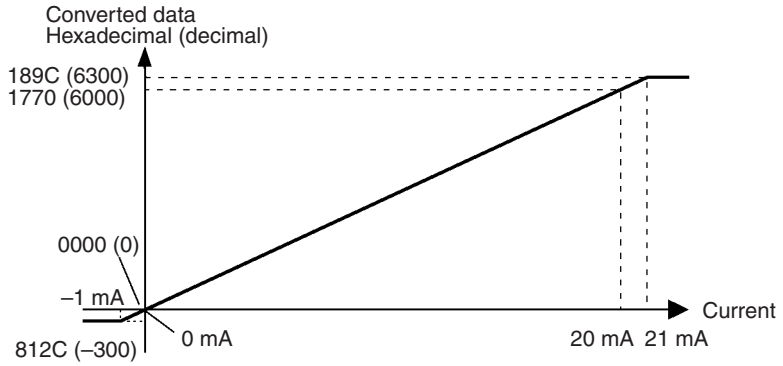

4- to 20-mA Inputs

The 4- to 20-mA range corresponds to the hexadecimal values 0000 to 1770 (0 to 6000). The most significant bit (bit 15) is set to 1 (ON) for currents from 3.2 to 4 mA and the AD conversion data is set to the absolute values; the rest of the word indicates the absolute value. The entire data range is 812C to 189C (–300 to 6300). If the input current falls below 3.2 mA, the open-circuit detection function is activated and the converted data is set to FFFF.

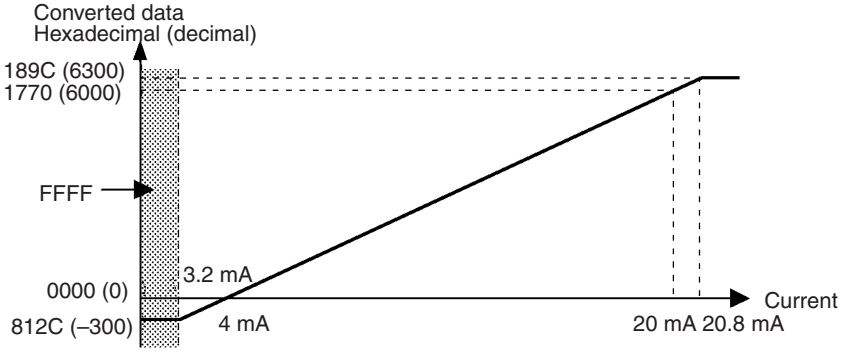

DRT1-AD04H

0 to 10 V

The 0- to 10-V range corresponds to the hexadecimal values 0000 to 7530 (0 to 30,000). The convertible data range is FA24 to 7B0C (–1,500 to 31,500). When the voltage is negative, the negative number is expressed as a two's complement.

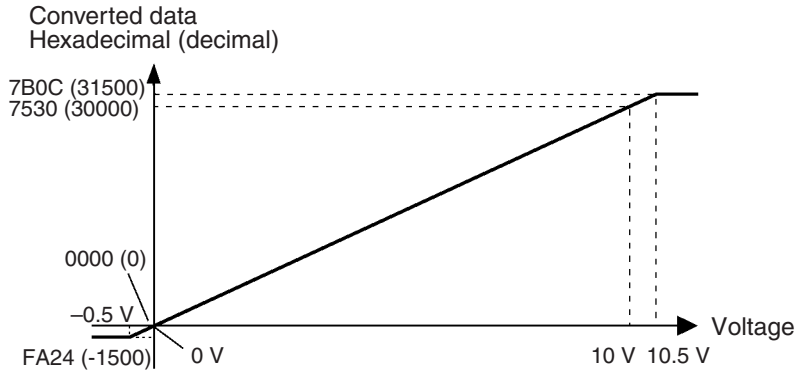

0 to 5 V

The 0- to 5-V range corresponds to the hexadecimal values 0000 to 7530 (0 to 30,000). The convertible data range is FA24 to 7B0C (–1,500 to 31,500). When the voltage is negative, the negative number is expressed as a two's complement.

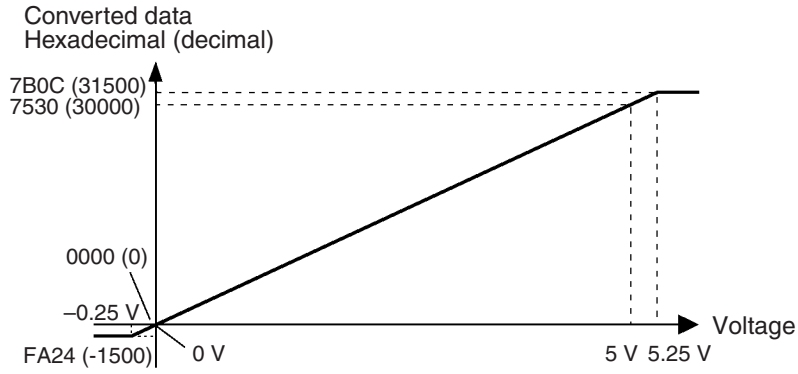

1 to 5 V

The 1- to 5-V range corresponds to the hexadecimal values 0000 to 7530 (0 to 30,000). The convertible data range is FA24 to 7B0C (–1,500 to 31,500). The 0.8- to 1-V range corresponds to the hexadecimal values FA24 to 7B0C (–1,500 to 0). If the voltage drops below the input range (i.e., if the input voltage drops below 0.8 V), the open-circuit detection function is activated and the data is set to 7FFF.

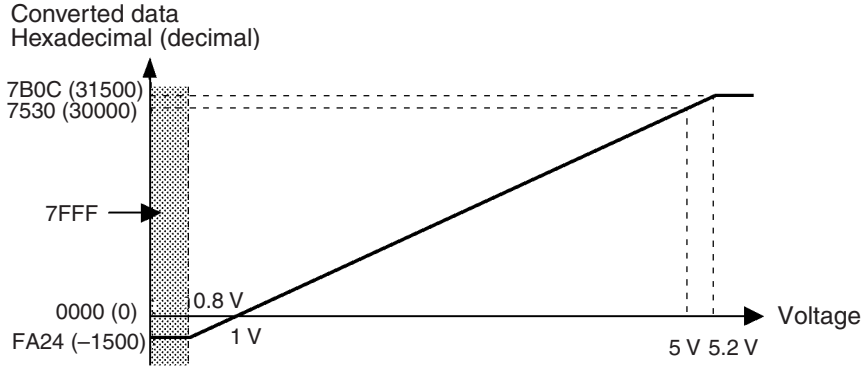

0 to 20 mA

The 0- to 20-mA range corresponds to the hexadecimal values 0000 to 7530 (0 to 30,000). The convertible data range is FA24 to 7B0C (–1,500 to 31,500). When the current is negative, the negative number is expressed as a two's complement.

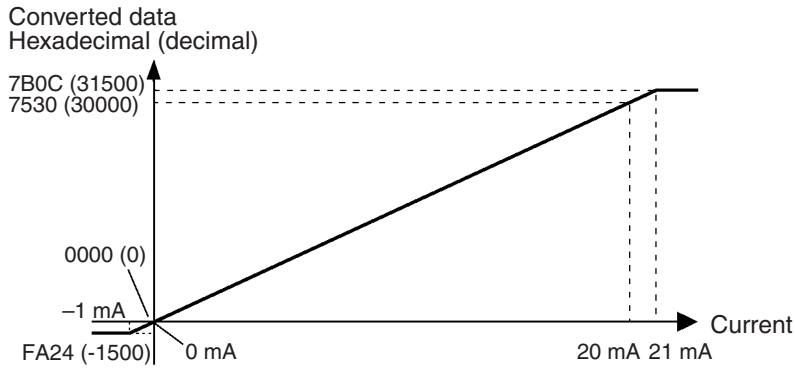

4 to 20 mA

The 4- to 20-mA range corresponds to the hexadecimal values 0000 to 7530 (0 to 30,000). The convertible data range is FA24 to 7B0C (–1,500 to 31,500). The 3.2- to 4-mA range corresponds to the hexadecimal values FA24 to 0000 (–1,500 to 0). If the current drops below the input range (i.e., if the current voltage drops below 3.2 mA), the open-circuit detection function is activated and the data is set to 7FFF.

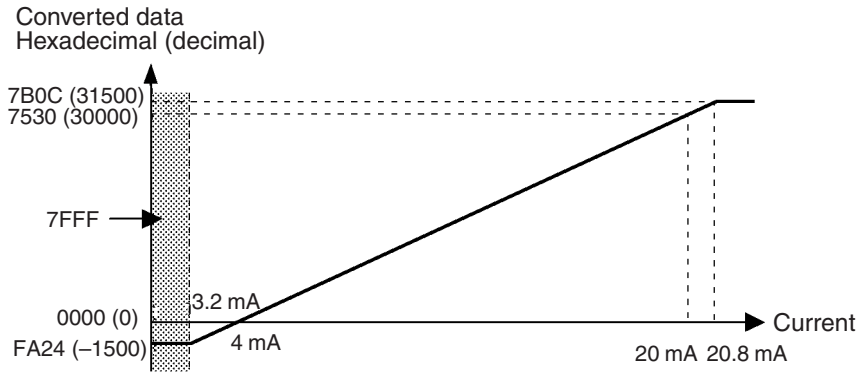

Number of Inputs Setting (DRT1-AD04 Only)

The number of inputs can be limited to two by turning ON pin 9 of the DIP switch. Changing the number of inputs from four to two reduces the sampling time from 8 ms/4 inputs to 4 ms/2 inputs, which provides faster conversion.

If the number of inputs is two, the number of words allocated to the Input Terminal in the PLC is also reduced to 2 words. When only two inputs are used, inputs 0 and 1 are used (inputs 2 and 3 cannot be used.)

Averaging Function Setting (DRT1-AD04 Only)

With the DRT1-AD04, the averaging function can be enabled for all inputs (0 through 3) by turning ON pin 10 of the DIP switch. The averaging function outputs the average (a moving average) of the last eight input values as the converted value. Use this function to smooth inputs that vary like the one in the following diagram.

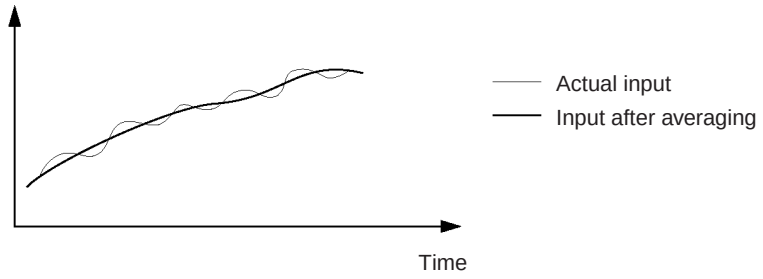

Note The time required for converted data refreshing remains 2 ms/point when the averaging function is enabled. The first communications data after the power is turned ON will be output after averaging eight samples.

Open-circuit Detection Function

The open-circuit detection function is activated when the input range is set to 1 to 5 V and the voltage drops below 0.8 V, or when the input range is set to 4 to 20 mA and the current drops below 3.2 mA. When the open-circuit detection function is activated, the converted data is set to FFFF for the DRT1-AD04 and 7FFF for the DRT1-AD04H. In addition, with the DRT1-AD04H, the broken wire indicator lights when the open-circuit detection function is activated.

The open-circuit detection function is enabled or cleared at the same time as the conversion time. If the input returns to the convertible range, the open-circuit detection is cleared automatically and the output returns to the normal range.

Converted Data

The converted data is transferred to the Master as shown in the following diagram.

DRT1-AD04

	15	14	13	12 11 10 9 8 7 6 5 4 3 2 1 0 Bit
First word	Sign bit	0	0	Input 0 converted data
First word + 1	Sign bit	0	0	Input 1 converted data
First word + 2	Sign bit	0	0	Input 2 converted data*
First word + 3	Sign bit	0	0	Input 3 converted data*

Note *Not used when there are two input points. At that time only two words are occupied.

The sign bit is turned ON to indicate that the converted value is negative; the converted value will be the absolute value (not the two's complement).

Example: When –300 is converted, the sign bit (bit 15) is set to 1 and 300 is output as the binary value as 12C hexadecimal. The contents of the word is thus 812C, as shown in the following illustration.

15	14	13	12	11	10	9	8	7	6	5	4	3	2	1	0
1	0	0	0	0	0	0	1	0	0	1	0	1	1	0	0
8 (16^3)				1 (16^2)				2 (16^1)				C (16^0)			

DRT1-AD04H

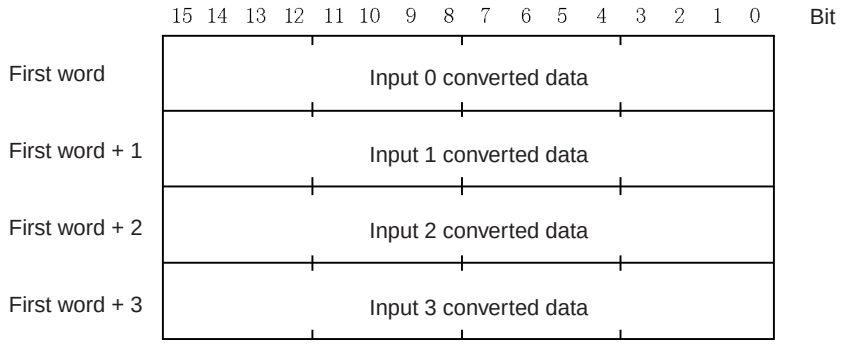

If the converted data is a negative number, it is expressed as a two's complement. The NEG command can be useful to obtain the absolute value from the two's complement.

Conversion Time

DRT1-AD04

AD conversion values are refreshed every 2 ms for each input point.

DRT1-AD04H

AD conversion values are refreshed every 250 ms. It may take up to 650 ms, however, from when the step response is input until AD conversion data of 90% of that value can be transmitted.

Dimensions

The following diagram shows the dimensions for the DRT1-AD04 and DRT1-AD04H Analog Input Terminals. All dimensions are in mm.

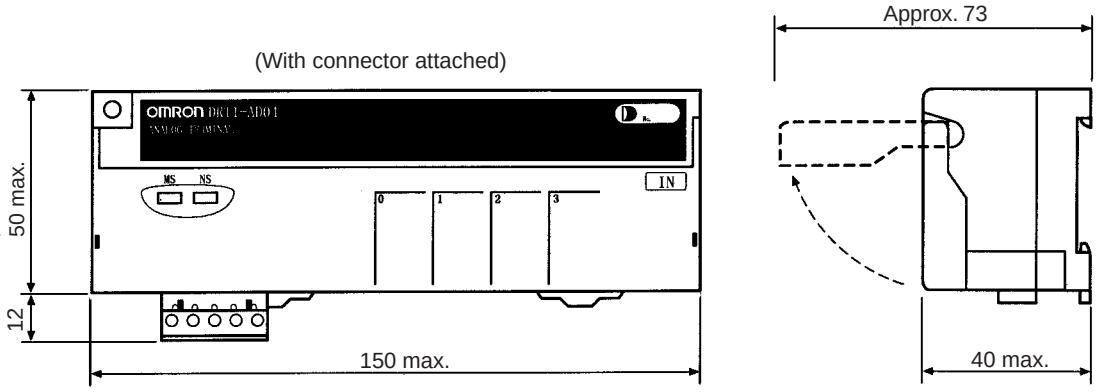

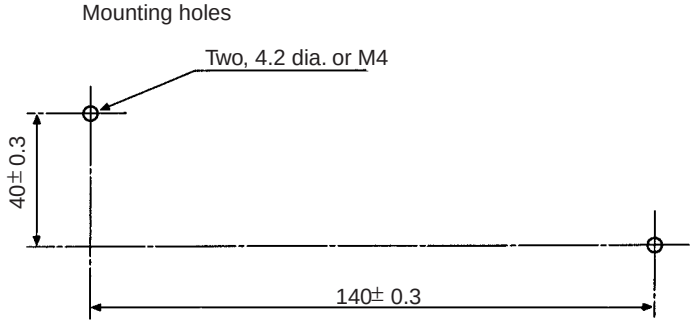

4-8-3 Analog Output Terminal: DRT1-DA02

Specifications

General Specifications

Item	Specification	
	Voltage outputs	Current outputs
Output points	2 points (allocated two words in the Master Unit.)	
Communications power supply voltage	11 to 25 V DC (supplied from the communications connector)	
Internal power supply voltage	20.4 to 26.4 V DC (24 V DC –15% to 10%)	
Current consumption	Communications: 30 mA max. Internal circuit: 140 mA max.	
Noise immunity	±1.5 $kV_{p-p,}$ pulse width: 0.1 to 1 µs, pulse rise time: 1 ns (via noise simulator)	
Vibration resistance	10 to 55 Hz, 1.0-mm double amplitude	
Shock resistance	200 m/s^2	
Dielectric strength	500 V AC for 1 min (between insulated circuits)	
Insulation resistance	20 MΩ min. at 250 V DC (between insulated circuits)	
Ambient operating temperature	0 to 55°C	
Ambient operating humidity	35% to 85% (with no condensation)	

Item		Specification	
		Voltage outputs	**Current outputs**
Ambient operating environment		No corrosive gases.	
Ambient storage temperature		–25 to 65°C	
Mounting method		M4 screw mounting or 35-mm DIN track mounting	
Mounting strength		50 N 10 N min. in the DIN Track direction	
Terminal strength		Pull: 50 N	
Weight		160 g max.	
Output signal range		1 to 5 V, 0 to 10 V, or –10 to 10 V	0 to 20 mA or 4 to 20 mA
Allowable external output load resistance		1 KΩ min.	600 Ω max.
Output impedance		0.5 Ω max.	---
Resolution		1/6000 (full scale)	
Accuracy	25°C	±0.4% FS	
	0 to 55°C	±0.8% FS	
Conversion time		4 ms/2 points	
Conversion output data (Binary)		–10- to 10-V range: 8BB8 to 0 to 0BB8 full scale Other signal ranges: 0000 to 1770 full scale	
Isolation method		Photocoupler isolation between analog outputs and communications lines (There is no isolation between analog output signals.)	

Components

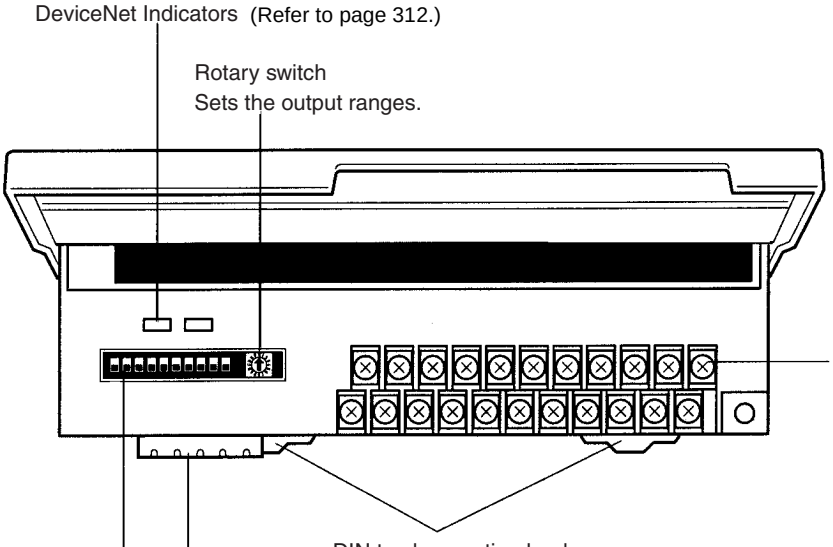

DIP switch (Refer to page 40.)

Pins 1 to 6: Node address setting
Pins 7 and 8: Baud rate setting
Pins 9 and 10: Output status after communications error

DIP Switch Settings

The following diagram shows the functions of the DIP switch.

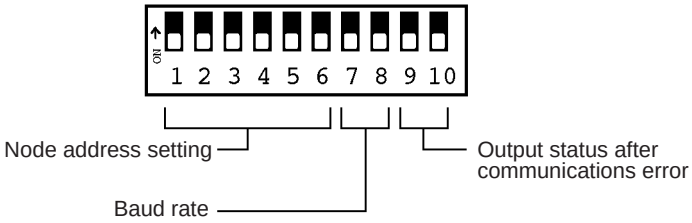

The following table summarizes the DIP switch settings. (All pins are factory-set to OFF.)

Pin(s)	Function	Settings		
1 through 6	Node address setting	Refer to *4-8-1 Node Address and Baud Rate Setting* for details.		
7 and 8	Baud rate			
9 and 10	Output status at communications error. (See page 154 for details.)	9	10	Output
		OFF	OFF	Clear at “Low” (see below) (Factory setting)
		OFF	ON	Clear at “High” (see below)
		ON	OFF	Hold
		ON	ON	Hold

Outputs for “High” and “Low” Clear

Pins 9 and 10 of the DIP switch determine the status of the outputs after a communications error occurs in DeviceNet communications. The following table shows the lower and upper limits of the output ranges for each output signal range setting.

Output signal range	“Low”	“High”
–10 to 10 V	–11 V	11 V
0 to 10 V	–0.5 V	10.5 V
1 to 5 V	0.8 V	5.2 V
0 to 20 mA	0 mA	21 mA
4 to 20 mA	3.2 mA	20.8 mA

Note Always turn OFF the Slave’s power supply (including the communications power supply) before changing any settings.

Rotary Switch Setting

Set the output signal range for each output with the rotary switch.
The following table shows the rotary switch settings and corresponding output signal range settings.

No.	Signal range for output 0	Signal range for output 1
0	1 to 5 V	1 to 5 V
1	1 to 5 V	0 to 10 V
2	1 to 5 V	–10 to 10 V
3	1 to 5 V	0 to 20 mA
4	1 to 5 V	4 to 20 mA
5	0 to 10 V	0 to 10 V
6	0 to 10 V	–10 to 10 V
7	0 to 10 V	0 to 20 mA

No.	Signal range for output 0	Signal range for output 1
8	0 to 10 V	4 to 20 mA
9	–10 to 10 V	–10 to 10 V
A	–10 to 10 V	0 to 20 mA
B	–10 to 10 V	4 to 20 mA
C	0 to 20 mA	0 to 20 mA
D	0 to 20 mA	4 to 20 mA
E	4 to 20 mA	4 to 20 mA
F	(Setting not possible.)	

Internal Circuits

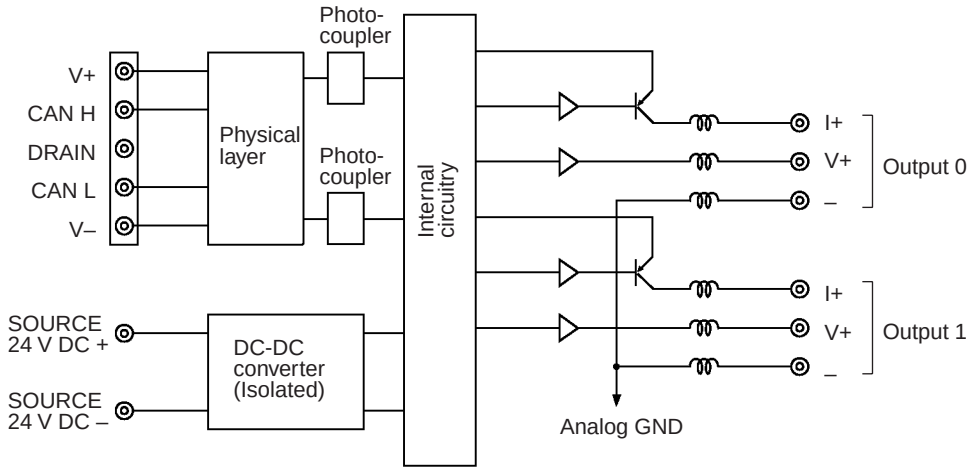

Terminal Arrangement

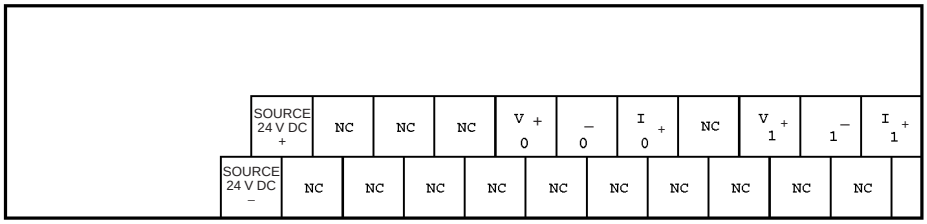

Wiring

Connect the power supply and outputs (voltage output or current output) to the Analog Output Terminal's terminal block as shown in the following diagram.

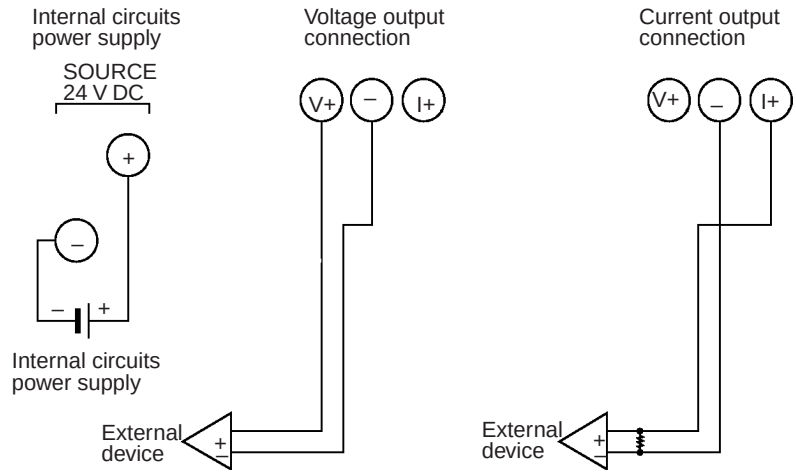

Output Ranges and Converted Data

The Analog Output Terminal converts the digital output data to analog values. The analog values depend on the output signal ranges, as shown in the following diagrams.

<u>–10- to 10-V Outputs</u>

The hexadecimal values 8BB8 to 0BB8 (–3000 to 3000) correspond to an analog voltage range of –10 to 10 V.
The entire output range is –11 to 11 V.

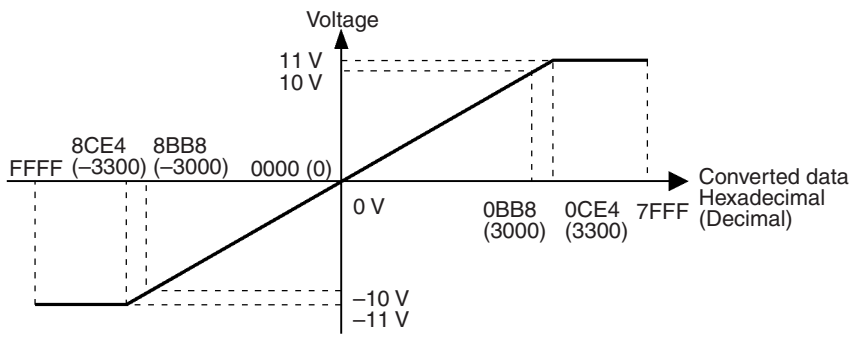

<u>0- to 10-V Outputs</u>

The hexadecimal values 0000 to 1770 (0 to 6000) correspond to an analog voltage range of 0 to 10 V. The entire output range is –0.5 to 10.5 V.

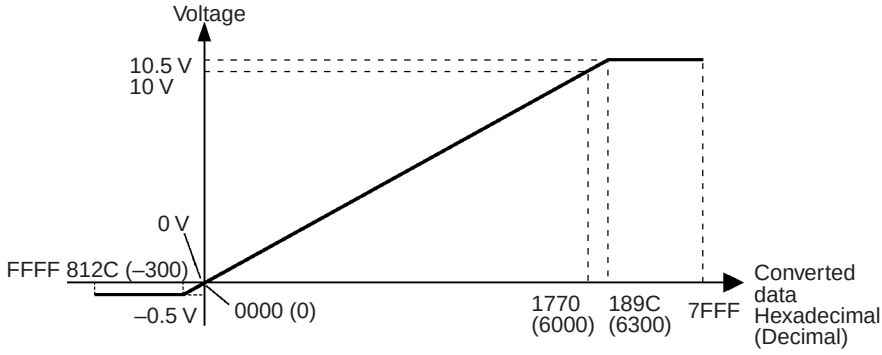

1- to 5-V Outputs

The hexadecimal values 0000 to 1770 (0 to 6000) correspond to an analog voltage range of 1 to 5 V. The entire output range is 0.8 to 5.2 V.

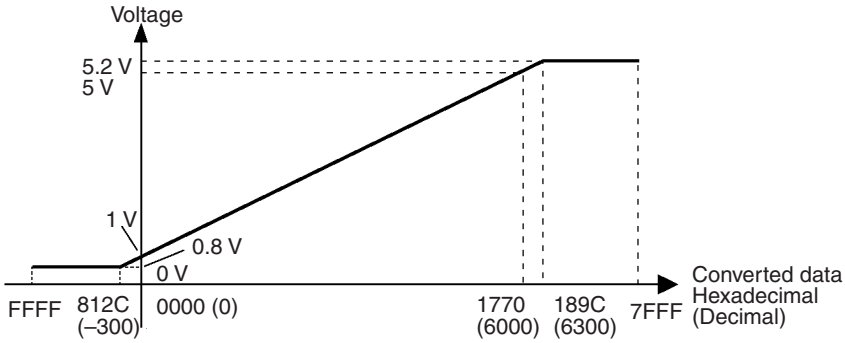

0- to 20-mA Outputs

The hexadecimal values 0000 to 1770 (0 to 6000) correspond to an analog current range of 0 to 20 mA. The entire output range is 0 to 21 mA.

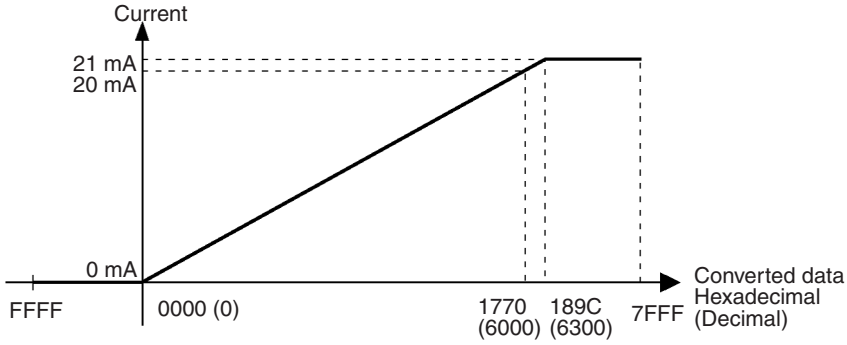

4- to 20-mA Outputs

The hexadecimal values 0000 to 1770 (0 to 6000) correspond to an analog current range of 4 to 20 mA. The entire output range is 3.2 to 20.8 mA.

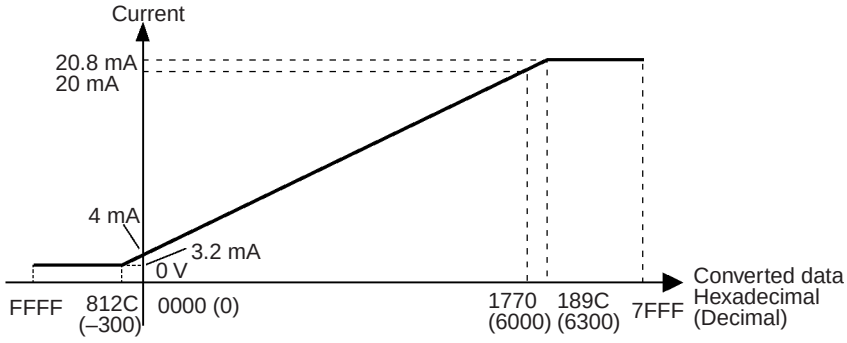

Output Status after Communications Error

Pins 9 and 10 of the DIP switch determine the status of the outputs after a communications error occurs in DeviceNet communications.

Hold: Maintains the previous output status.
Low: Clears to the lower limit of the output signal range.
High: Clears to the upper limit of the output signal range.

The following table shows the lower and upper limits of the output ranges for each output signal range setting.

Output signal range	"Low"	"High"
–10 to 10 V	–11 V	11 V
0 to 10 V	–0.5 V	10.5 V
1 to 5 V	0.8 V	5.2 V
0 to 20 mA	0 mA	21 mA
4 to 20 mA	3.2 mA	20.8 mA

Converted Data

Output the converted data to the Master as shown in the following diagram.

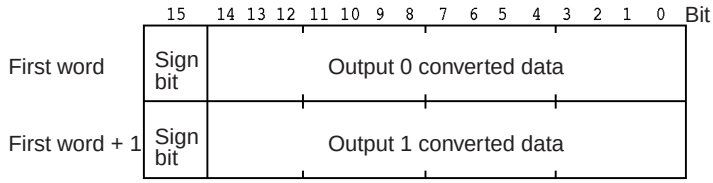

The sign bit is turned ON to indicate that the converted value is negative, at which time the converted value will be an absolute value.

Dimensions

The following diagram shows the dimensions for the DRT1-DA02 Analog Output Unit. All dimensions are in mm.

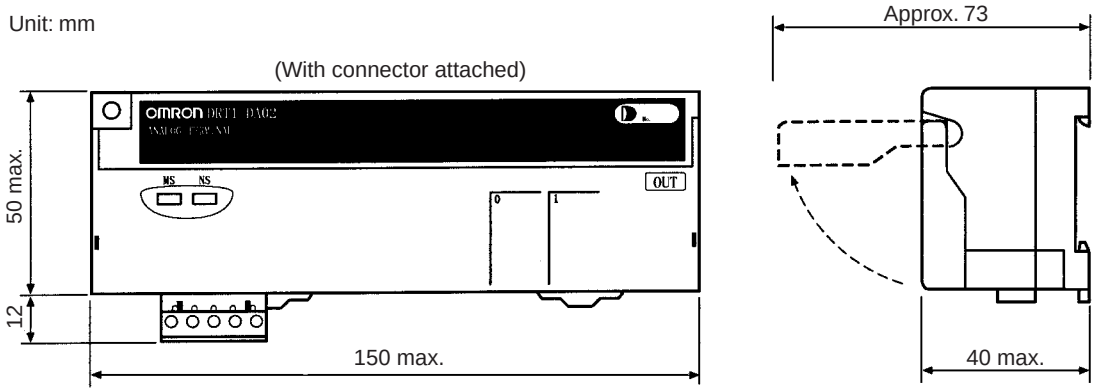

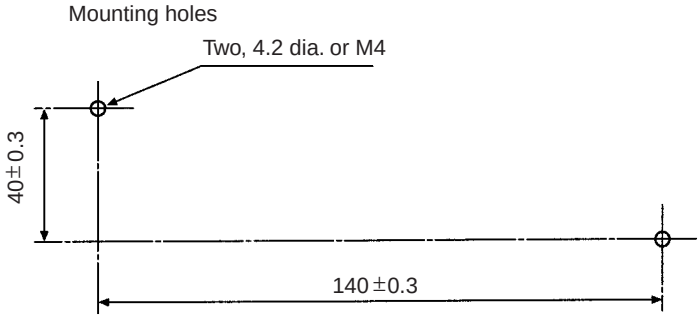

4-8-4 Mounting in Control Panels

Either of the following methods can be used to mount an Analog I/O Terminal in a control panel.

Using Screws

Open mounting holes in the control panel according to the dimensions provided for mounting holes in the dimensions diagrams and then secure the Analog I/O Terminal with M4 screws. The appropriate tightening torque is 0.6 to 0.98 N·m.

Using DIN Track

Mount the back of the Analog I/O Terminal to a 35-mm DIN Track. To mount the Terminal, pull down on the mounting hook on the back of the Terminal with a screwdriver, insert the DIN Track on the back of the Terminal, and then secure the Terminal to the DIN Track. When finished, secure all Slaves on both ends of the DIN Track with End Plates.

Connecting End Plates

Hook the bottom of the End Plate onto the DIN Track, as shown at (1) in the following diagram, then hook the top of the End Plate as shown at (2).

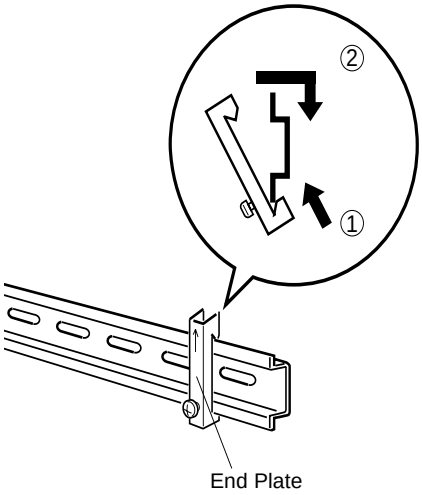

Note Always attach End Plate to both ends of Slaves connected to DIN Track.

Mounting Direction

Unless specific restrictions are given for the Slave, it can be mounted in any direction. Any of the following directions are okay.

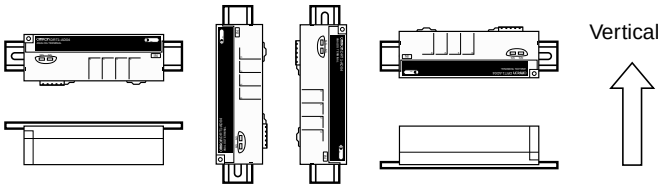

4-8-5 Wiring Internal Power Supplies and I/O Lines

The internal circuit power supplies and I/O lines are all wired to M3 screw terminals. Connect M3 crimp terminals and then connect them to the terminal block. Tighten the screws fixing the crimp terminals to a torque of 0.3 to 0.5 N·m.

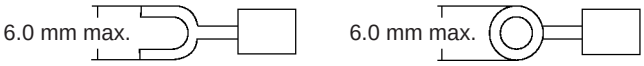

Wiring the Internal Power Supply

Refer to the wiring details for each Slave for information on the terminal arrangement at the terminal block. The following example shows the internal power supply for a DRT1-AD04 Analog Input Terminal.

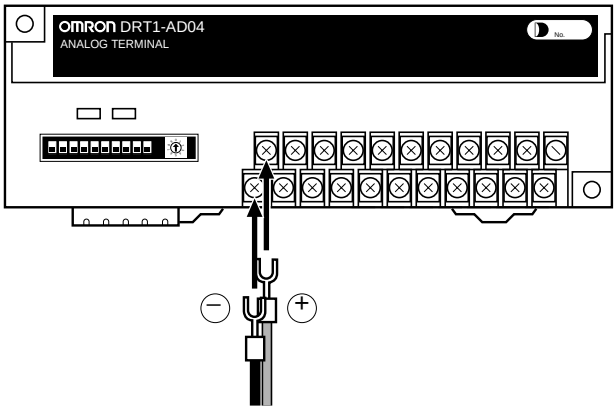

Wiring I/O

Refer to the wiring details for each Slave for information on the terminal arrangement at the terminal block and external I/O wiring. The following example shows the wiring to input 0 on a DRT1-AD04 Analog Input Terminal.

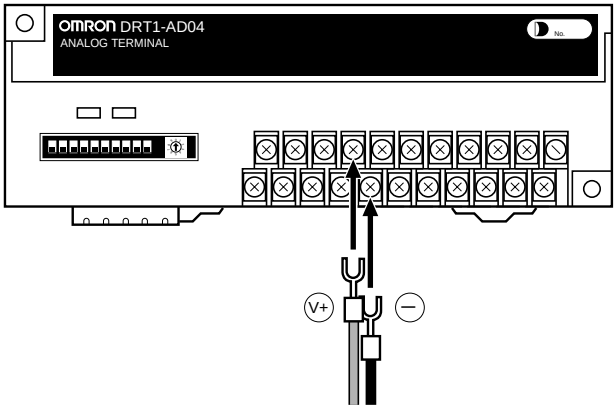

4-9 Temperature Input Terminals

4-9-1 Node Address and Baud Rate Settings

This section describes the Slaves' node address setting, baud rate settings, and hold/clear outputs for communications error setting. These settings are made using the following pins on the DIP switch.

Node address setting: Pins 1 through 6
Baud rate setting: Pins 7 and 8
Slave-specific setting: Pins 9 and 10
(Refer to the descriptions of individual Slaves.)

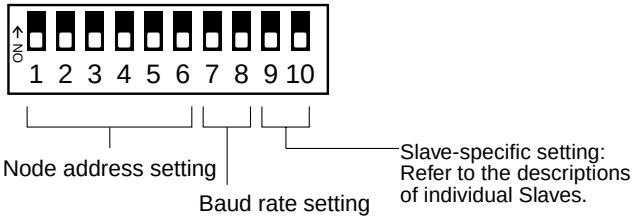

Node Address Settings

Each Slave's node address is set with pins 1 through 6 of the Slave's DIP switch. Any node address within the setting range can be used as long as it isn't already set on another node.

DIP switch setting						Node address
Pin 6	Pin 5	Pin 4	Pin 3	Pin 2	Pin 1	
0	0	0	0	0	0	0 (default)
0	0	0	0	0	1	1
0	0	0	0	1	0	2
⋮						⋮
1	1	1	1	0	1	61
1	1	1	1	1	0	62
1	1	1	1	1	1	63

Note

1. Refer to *Appendix A Node Address Settings Table* for a complete table of DIP switch settings.
2. The Slave won't be able to participate in communications if the same node address is used for the Master or another Slave node (node address duplication error).

Baud Rate Setting

Pins 7 and 8 are used to set the baud rate as shown in the following table. (These pins are factory-set to OFF.)

Pin 7	Pin 8	Baud rate
OFF	OFF	125 kbps (default)
ON	OFF	250 kbps
OFF	ON	500 kbps
ON	ON	Not allowed.

Note

1. Always turn OFF the Slave's power supply (including the communications power supply) before changing the baud rate setting.
2. Set the same baud rate on all of the nodes (Master and Slaves) in the Network. Any Slaves with baud rates different from the Master's rate won't be able to participate in communications. Furthermore, a node with an incorrect baud rate may cause communications errors between nodes with correct baud rate settings.

4-9-2 Temperature Input Terminals: DRT1-TS04T and DRT1-TS04P

Specifications

General Specifications

Item	Specification	
Model	DRT1-TS04T	DRT1-TS04P
Input type	Thermocouple input	Resistance temperature sensor input
Input points	4 points (allocated four words in the Master Unit.)	
Communications power supply voltage	11 to 25 V DC (supplied from the communications connector)	
Internal power supply voltage	20.4 to 26.4 V DC (24 V DC –15% to 10%)	
Current consumption	Communications: 30 mA max. Internal circuit: 130 mA max.	
Noise immunity	±1.5 kV_{p-p}, pulse width: 0.1 to 1 µs, pulse rise time: 1 ns (via noise simulator)	
Vibration resistance	10 to 55 Hz, 1.0-mm double amplitude	

Item	Specification	
Shock resistance	200 m/s^2	
Dielectric strength	500 V AC for 1 min (between insulated circuits)	
Insulation resistance	20 MΩ min. at 250 V DC (between insulated circuits)	
Ambient operating temperature	0 to 55°C	
Ambient operating humidity	35% to 85% (with no condensation)	
Ambient operating environment	No corrosive gases.	
Ambient storage temperature	–25 to 65°C	
Mounting method	M4 screw mounting or 35-mm DIN track mounting	
Mounting strength	50 N 10 N min. in the DIN Track direction	
Terminal strength	Pull: 50 N	
Weight	230 g max.	160 g max.
Input classification	R, S, K1, K2, J1, J2, T, E, B, N, L1, L2, U, W, PL II convertible (4-point common input class)	Pt100, JPt100 convertible (4-point common input class)
Instruction precision	(Instruction value ±0.5% or ±2°C, whichever is larger) ±1 digit max. (See note.)	(Instruction value ±0.5% or ±1°C, whichever is larger) ±1 digit max.
Conversion period	250 ms / 4 pts.	
Temperature conversion data	Binary data (4-digit hexadecimal)	
Isolation method	Photocoupler isolation between temperature inputs and communications lines (Photocoupler isolation between temperature input signals.)	

Note Less than –100°C of K1, T, N: ±4°C ±1 digit max.
U, L1, L2: ±4°C ±1 digit max.
Less than 200°C of R, S: ±6°C ±1 digit max.
Less than 400°C of B: No regulation
W: (Instruction value ±0.5% or ±6°C, whichever is larger) ±1 digit max.
PL II: (Instruction value ±0.5% or ±4°C, whichever is larger) ±1 digit max.

Components of the DRT1-TS04T and DRT1-TS04P

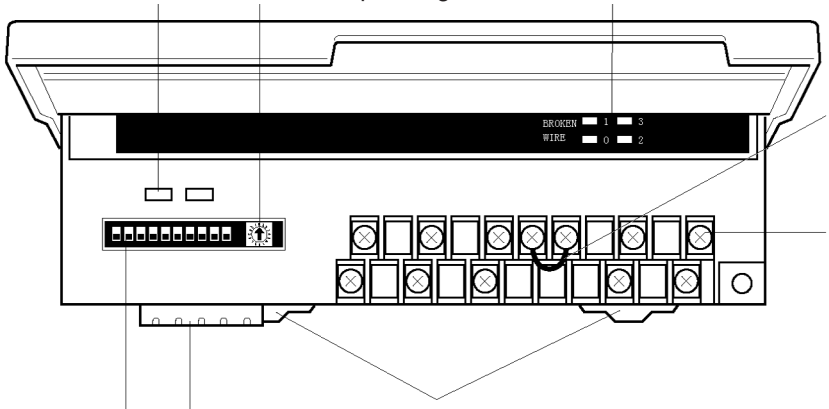

DIP switch
1 to 6: Node address (Refer to page 124.)
7, 8: Baud rate (Refer to page 124.)
9: Temperature unit (5C or 5F) (See below)
10: Display mode for 2 digits below decimal point (See below)

DIP Switch Settings

The following diagram shows the functions of the DIP switch for the DRT1-TS04T and DRT1-TS04P Temperature Input Terminals.

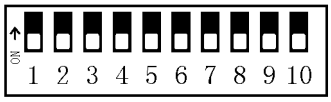

Node address
Baud rate
Two digits below decimal point
Temperature unit

Pin(s)	Function	Settings	
1 through 6	Node address setting	Refer to *4-9-1 Node Address and Baud Rate Settings* for details.	
7 and 8	Baud rate setting		
9	Temperature unit setting	OFF (factory setting)	°C
		ON	°F
10	Display mode for 2 digits below the decimal (Refer to page 164.)	OFF (factory setting)	Normal mode (0 or 1 digit depending on input classification)
		ON	Two digits below decimal point

Note Always turn OFF the Slave's power supply (including the communications power supply) before changing any settings.

Rotary Switch Setting

Set the common input classification and input signal range for each input with the rotary switch. (The input classification and input range cannot be set for 4-point classification.)

Note Always turn OFF the Slave's power supply (including the communications power supply) before changing any settings.

DRT1-TS04T

The following table shows the input classifications and input ranges according to the rotary switch settings.

Number	Input classification	Range (°C)	Range (°F)
0	R	0 to 1700	0 to 3000
1	S	0 to 1700	0 to 3000
2	K1	–200 to 1300	–300 to 2300
3	K2	0.0 to 500.0	0.0 to 900.0
4	J1	–100 to 850	–100 to 1500
5	J2	0.0 to 400.0	0.0 to 750.0
6	T	–200.0 to 400.0	–300.0 to 700.0
7	E	0 to 600	0 to 1100
8	L1	–100 to 850	–100 to 1500
9	L2	0.0 to 400.0	0.0 to 750.0
A	U	–200.0 to 400.0	–300.0 to 700.0
B	N	–200 to 1300	–300 to 2300
C	W	0 to 2300	0 to 4100
D	B	100 to 1800	300 to 3200
E	PL II	0 to 1300	0 to 2300
F	Cannot be set.		

DRT1-TS04P

The following table shows the input classifications and input ranges according to the rotary switch settings.

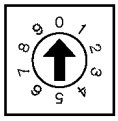

Number	Input classification	Range (°C)	Range (°F)
0	PT100	–200.0 to 650.0	–300.0 to 1200.0
1	JPT100	–200.0 to 650.0	–300.0 to 1200.0
2 to 9	Cannot be set.		

Terminal Arrangement

DRT1-TS04T

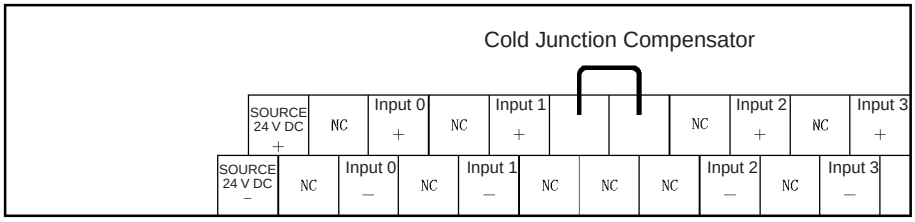

Note Do not touch or remove the Cold Junction Compensator.

DRT1-TS04P

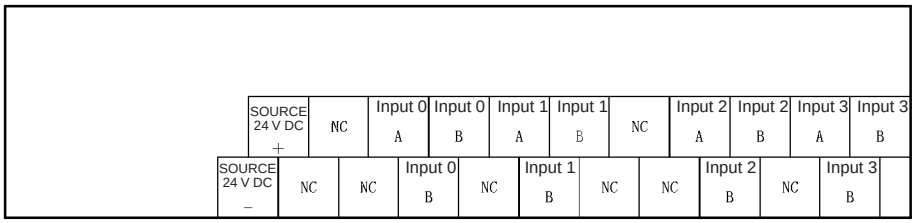

Wiring

Connect the inputs to the Temperature Input Terminal's terminal block as shown in the following diagram, depending on whether thermocouple inputs or resistance temperature sensor inputs are used.

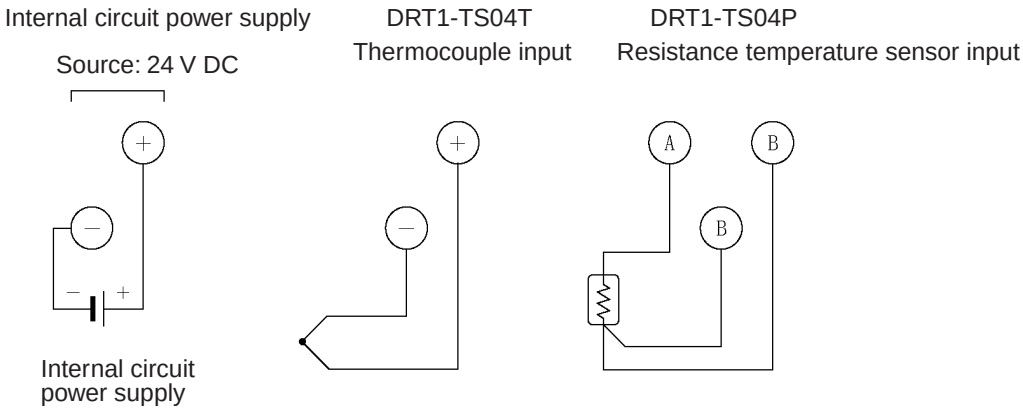

Temperature Conversion Data for the DRT1-TS04T and DRT1-TS04P

Data that is input is converted to binary data (4-digit hexadecimal) and the Master is notified. If the converted data is a negative number, it is expressed as a two's complement.

The four inputs occupy four words at the Master, as shown below. If the input classification is set for up to one digit below the decimal point, a multiple of 10 will be transmitted as binary data.

	15 14 13 12 11 10 9 8 7 6 5 4 3 2 1 0 Bit
Beginning word	Input 0: Temperature conversion data
Beginning word + 1	Input 1: Temperature conversion data
Beginning word + 2	Input 2: Temperature conversion data
Beginning word + 3	Input 3: Temperature conversion data

Input classification	Unit: 1°C (°F)	R, S, K1, J1, E, L1, N, W, B, PL	850° → 0352 (4 digits hex) –200° → FF38 (4 digits hex)
	Unit: 0.1°C (°F)	K2, J2, T, L2, U, Pt100, JPt100	x10 500.0° → 5000 → 1388 (4 digits hex) –20.0° → 200 → FF38 (4 digits hex) –200.0° → 2000 → F830 (4 digits hex)

Note

1. For more details regarding temperature conversion data with a unit setting of two digits below the decimal point (unit: 0.01), refer to page 164.
2. If there is a sudden temperature change, condensation may develop inside of the Terminal and cause incorrect values to be displayed. If condensation does develop, leave the Terminal for approximately one hour at a stable temperature before using it.

Data Ranges and the Open-circuit Detection Function

The following table shows the convertible data ranges according to the number set by the rotary switch.

DRT1-TS04T

Number	Input classification	Range (°C)	Range (°F)
0	R	–20 to 1720	–20 to 3020
1	S	–20 to 1720	–20 to 3020
2	K1	–220 to 1200	–320 to 2320
3	K2	–20.0 to 520.0	–20.0 to 920.0
4	J1	–120 to 870	–120 to 1520
5	J2	–20.0 to 420.0	–20.0 to 770.0
6	T	–220.0 to 420.0	–320.0 to 720.0
7	E	–20 to 620	–20 to 1120
8	L1	–120 to 870	–120 to 1520
9	L2	–20.0 to 420.0	–20.0 to 770.0
A	U	–220.0 to 420.0	–320.0 to 720.0
B	N	–220 to 1320	–320 to 2320
C	W	–20 to 2320	–20 to 4120
D	B	80 to 1820	280 to 3220
E	PL II	–20 to 1320	–20 to 2320
F	Cannot be set.		

DRT1-TS04P

Number	Input classification	Range (°C)	Range (°F)
0	Pt100	–220.0 to 670.0	–320.0 to 1220.0
1	JPt100	–220.0 to 670.0	–320.0 to 1220.0
2 to 9	Cannot be set.		

If the input temperature goes outside of the permissible conversion range, the temperature data is fixed at the upper or lower limit.

If the input temperature goes beyond a given constant value, outside of the permissible conversion range, it is determined that the input wiring has been disconnected. The open-circuit detection function is then activated so that the temperature data is set to 7FFF (hexadecimal), and the broken wire indicator on the Temperature Input Terminal lights up. The open-circuit detection function will operate even if there is an error at the Cold Junction Compensator.

When the input temperature returns to within the conversion range, the open-circuit detection function is automatically cleared and the conversion data is returned to normal.

Temperature Input Terminal's Display Mode for 2 Digits Below the Decimal Point

This section explains the Temperature Input Terminal's display mode for 2 digits below the decimal point.

When the Temperature Input Terminal is in this mode, each single item of temperature data (four integer digits and two digits below the decimal point, in six digits of hexadecimal binary data) is provided to the Master Unit multiplied by 100 with the sign affixed. At that time the temperature data is divided into two parts as shown below, and these parts are alternately transmitted every 125 ms. (The two respective data items are each configured as one word of data.)

⚠ **Caution** In the display mode for 2 digits below the decimal point, temperature data is converted for up to two digits below the decimal point, but the actual resolution is not 0.01°C (°F). Therefore there may be some oscillation or jumping at the 0.01°C (°F) and 0.1°C (°F) digits. Resolutions beyond those prescribed for the normal mode should be treated as reference data.

The following diagram shows how temperature data is divided and the data configuration.

Temperature data (Actual temperature x 100, in binary data)

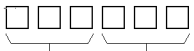

Notification format for leftmost 3 digits

15	14	13	12	11 10 9 8	7 6 5 4	3 2 1 0	Bit
Left/right	Temp. unit	Broken wire	Not used.	$\times 16^5$	$\times 16^4$	$\times 16^3$	
0: Left 1: Right	0: C° 1: F°	0: OK 1: Error	0 (Fixed)				
Sign/determination area				Data area			

Notification format for rightmost 3 digits

15	14	13	12	11 10 9 8	7 6 5 4	3 2 1 0	Bit
Right/left	Temp. unit	Broken wire	Not used.	$\times 16^2$	$\times 16^1$	$\times 16^0$	
0: Left 1: Right	0: C° 1: F°	0: OK 1: Error	0 (Fixed)				
Sign/determination area				Data area			

Leftmost/rightmost bit: Determines whether leftmost or rightmost digits are displayed.

Temperature unit bit: Determines whether temperature is expressed in °C or °F.

Broken wire bit: Turns ON (1) to notify of broken wire. At that time the data in the leftmost three digits is “7FF” and the data in the rightmost three digits is “FFF.”

The three leftmost digits and three rightmost digits, each comprising one word of data, are alternately provided to the Master every 125 ms as shown in the following diagram.

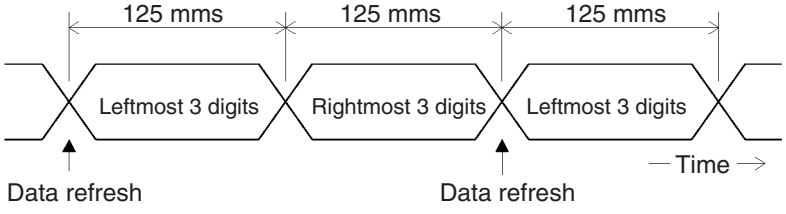

Example 1: 1130.25°C

Value multiplied by 100: 113025
Notification value: 01B981 (113025 expressed in hexadecimal)

Contents of 3 Leftmost Digits

	Sign/Determin.				$\times 16^5$	$\times 16^4$	$\times 16^3$
Bits	15	14	13	12	11 to 8	7 to 4	3 to 0
Data	0	0	0	0	0	1	B

Leftmost C Normal

Temperature conversion data: 0 0 1 B

Sign/determination area — Data area

Contents of 3 Rightmost Digits

	Sign/Determin.				$\times 16^2$	$\times 16^1$	$\times 16^0$
Bits	15	14	13	12	11 to 8	7 to 4	3 to 0
Data	1	0	0	0	9	8	1

Rightmost C Normal

Temperature conversion data: 8 9 8 1

Sign/determination area — Data area

Example 2: –100.12°C

Value multiplied by 100: –10012
Notification value: FFD8E4 (–10012 expressed in hexadecimal)

Contents of 3 Leftmost Digits

	Sign/Determin.				$\times 16^5$	$\times 16^4$	$\times 16^3$
Bits	15	14	13	12	11 to 8	7 to 4	3 to 0
Data	0	0	0	0	F	F	D

Leftmost C Normal

Temperature conversion data: 0 F F D

Sign/determination area — Data area

Contents of 3 Rightmost Digits

	Sign/Determin.				$\times 16^2$	$\times 16^1$	$\times 16^0$
Bits	15	14	13	12	11 to 8	7 to 4	3 to 0
Data	1	0	0	0	8	E	4

Rightmost C Normal

Temperature conversion data: 8 8 E 4

Sign/determination area — Data area

Example 3: –200.12°F

Value multiplied by 100: –20012
Notification value: FFB1D4 (–20012 expressed in hexadecimal)

Contents of 3 Leftmost Digits

	Sign/Determin.				$\times 16^5$	$\times 16^4$	$\times 16^3$
Bits	15	14	13	12	11 to 8	7 to 4	3 to 0
Data	0	1	0	0	F	F	B

Leftmost F Normal

Temperature conversion data: 4 F F B

Sign/determination area — Data area

Contents of 3 Rightmost Digits

	Sign/Determin.				$\times 16^2$	$\times 16^1$	$\times 16^0$
Bits	15	14	13	12	11 to 8	7 to 4	3 to 0
Data	1	1	0	0	1	D	4

Rightmost F Normal

Temperature conversion data: C 1 D 4

Sign/determination area — Data area

Example 4: Input Error (Broken Wire) (Unit:°F)

Notification value: 7FFFFF

Contents of 3 Leftmost Digits

	Sign/Determin.				$\times 16^5$	$\times 16^4$	$\times 16^3$
Bits	15	14	13	12	11 to 8	7 to 4	3 to 0
Data	0	1	1	0	7	F	F

Leftmost F Error

Temperature conversion data: 6 7 F F

Sign/determination area — Data area

Contents of 3 Rightmost Digits

	Sign/Determin.				$\times 16^2$	$\times 16^1$	$\times 16^0$
Bits	15	14	13	12	11 to 8	7 to 4	3 to 0
Data	1	1	1	0	F	F	F

Rightmost F Error

Temperature conversion data: E F F F

Sign/determination area — Data area

Note

1. Data notification is provided in order, from the leftmost digits to the rightmost. When reading data with the program, be sure to read it in that same order.
2. Taking the Programmable Controller's cycle time and the communications time into consideration, lower the reading cycle to 125 ms or less. If the reading cycle exceeds 125 ms, normal data cannot be read.

Sample Program for the DRT1-TS04T and DRT1-TS04P

The following program is an example of using the Temperature Input Terminal in the display mode for 2 digits below the decimal point.

Settings

Temperature Input Terminal's allocated words: 350 to 353
Temperature Input Terminal's mode: Two digits below decimal point (DIP switch pin 10: ON)

Operation

The temperature data from the Temperature Input Terminal's input 0 is stored in words 30 to 32 in binary data multiplied by 100, as shown below.

Word \ Bit	15 to 12	11 to 8	7 to 4	3	2	1	0
30	$x16^3$	$x16^2$	$x16^1$	$x16^0$			
31	$x16^7$	$x16^6$	$x16^5$	$x16^4$			
32	0 (Fixed)	0 (Fixed)	0 (Fixed)	0	Temperature unit bit	Broken wire bit	0

Temperature unit bit 0: °C; 1: °F
Broken wire bit: 0: Normal; 1: Error

The data in words 30 and 31 can be treated as 32-bit binary data.

Program Example

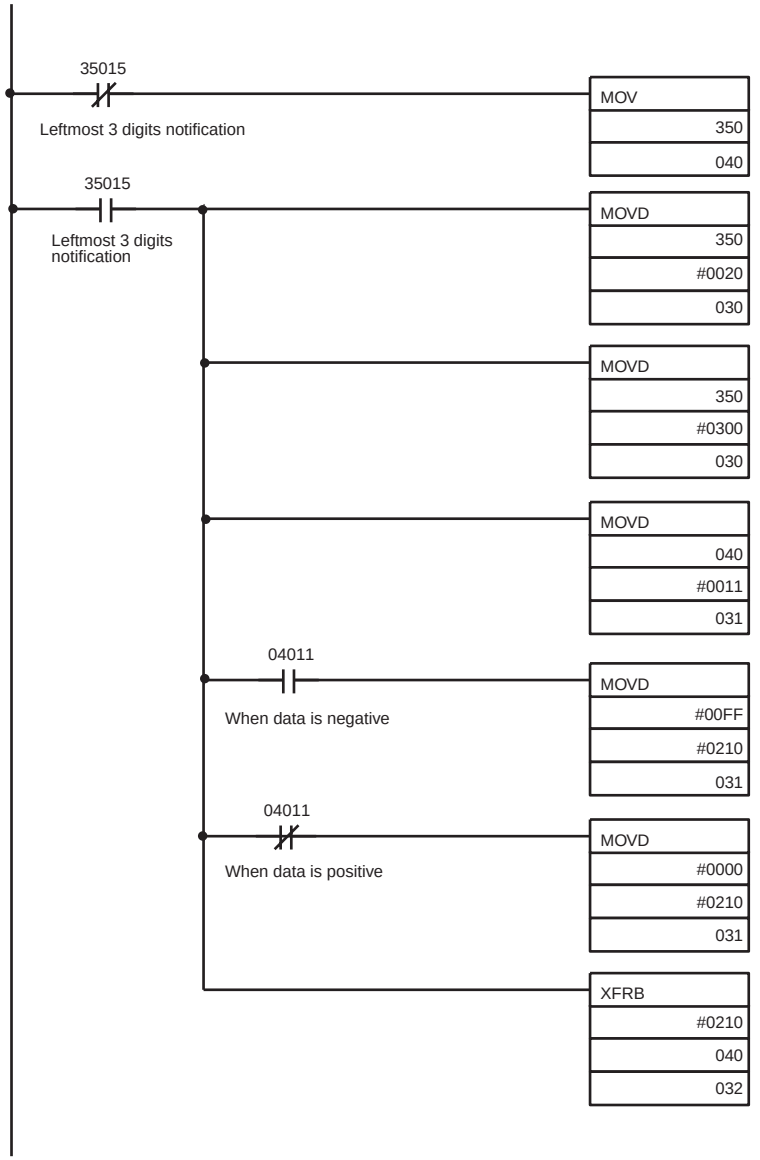

Dimensions

The following diagram shows the dimensions for the DRT1-TS04T and DRT1-TS04P Temperature Input Terminals. All dimensions are in mm.

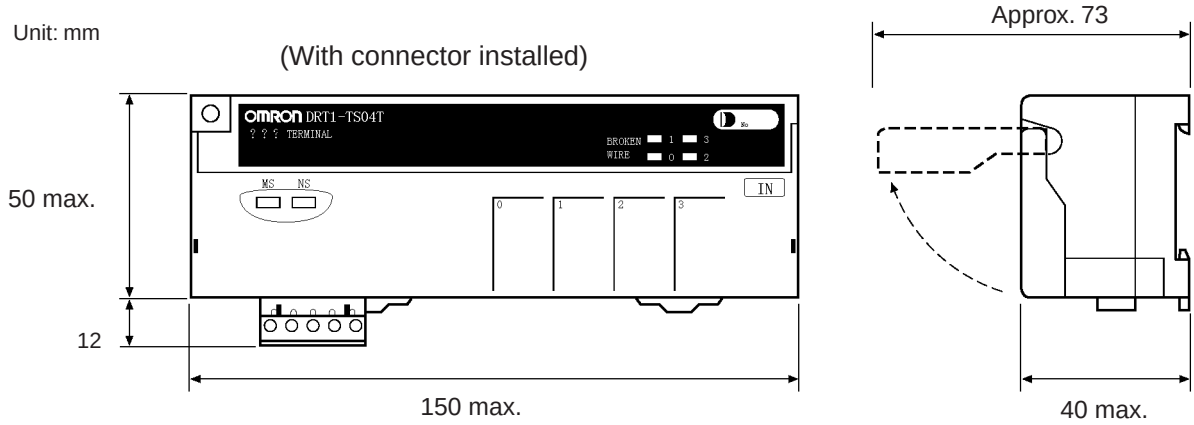

Mounting Hole Dimensions

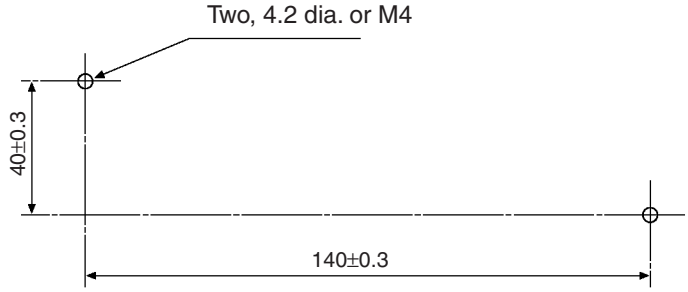

4-9-3 Mounting in Control Panels

Either of the following methods can be used to mount a Temperature Input Terminal in a control panel.

Using Screws

Open mounting holes in the control panel according to the dimensions provided for mounting holes in the dimensions diagrams and then secure the Temperature Input Terminals with M4 screws. The appropriate tightening torque is 0.6 to 0.98 N·m.

Using DIN Track

Mount the back of the Temperature Input Terminal to a 35-mm DIN Track. To mount the Terminal, pull down on the mounting hook on the back of the Terminal with a screwdriver, insert the DIN Track on the back of the Terminal, and then secure the Terminal to the DIN Track. When finished, secure all Slaves on both ends of the DIN Track with End Plates.

Connecting End Plates

Hook the bottom of the End Plate onto the DIN Track, as shown at (1) in the following diagram, then hook the top of the End Plate as shown at (2).

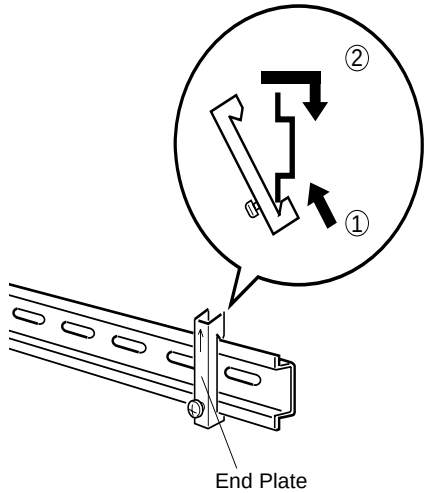

Note Always attach End Plate to both ends of Slaves connected to DIN Track.

Mounting Direction

Unless specific restrictions are given for the Slave, it can be mounted in any direction. Any of the following directions are okay.

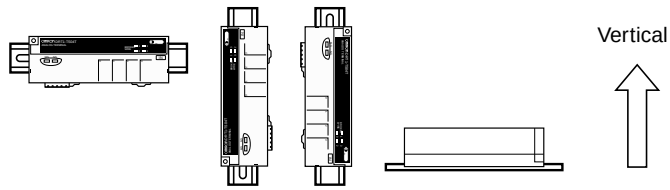

4-9-4 Wiring Internal Power Supplies and I/O Lines

The internal circuit power supplies and I/O lines are all wired to M3 screw terminals. Connect M3 crimp terminals and then connect them to the terminal block. Tighten the screws fixing the crimp terminals to a torque of 0.3 to 0.5 N·m.

Wiring the Internal Power Supply

Refer to the wiring details for each Slave for information on the terminal arrangement at the terminal block. The following example shows the internal power supply for a DRT1-TS04T Temperature Input Terminal.

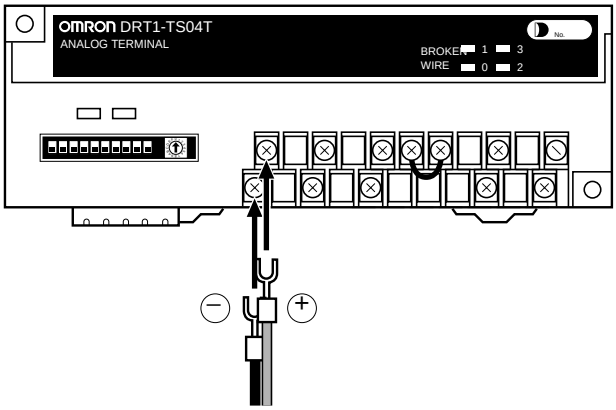

Wiring I/O

Refer to the wiring details for each Slave for information on the terminal arrangement at the terminal block and external I/O wiring. The following example shows the wiring to input 0 on a DRT1-TS04T Temperature Input Terminal.

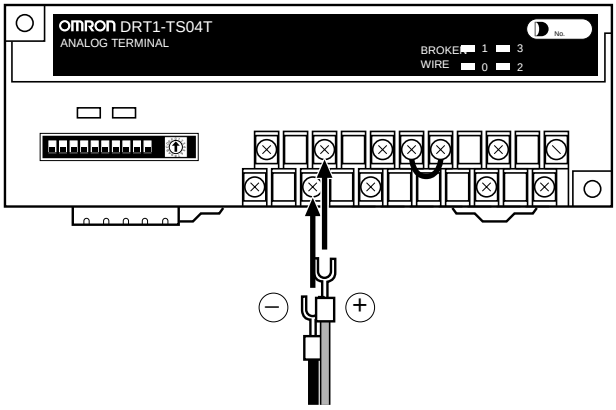

4-10 CQM1 I/O Link Unit

4-10-1 Node Address, Baud Rate, and Output Hold/Clear Settings

This section describes the Slaves' node address setting, baud rate settings, and hold/clear outputs for communications error setting. These settings are made using the following pins on the DIP switch.

Node address setting: Pins 1 through 6
Baud rate setting: Pins 7 and 8

Output hold/clear setting:Pin 10 (affects only outputs)

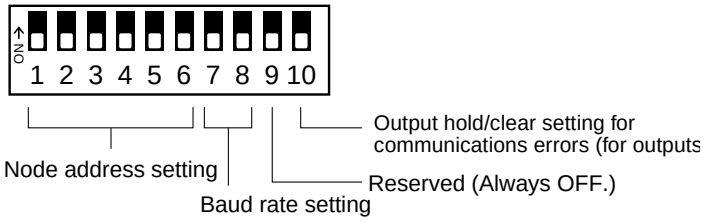

Node Address Settings

Each Slave's node address is set with pins 1 through 6 of the Slave's DIP switch. Any node address within the setting range can be used as long as it isn't already set on another node.

DIP switch setting						Node address
Pin 6	Pin 5	Pin 4	Pin 3	Pin 2	Pin 1	
0	0	0	0	0	0	0 (default)
0	0	0	0	0	1	1
0	0	0	0	1	0	2
⋮						⋮
1	1	1	1	0	1	61
1	1	1	1	1	0	62
1	1	1	1	1	1	63

0: OFF, 1: ON

Note

1. Refer to *Appendix A Node Address Settings Table* for a complete table of DIP switch settings.
2. The Slave won't be able to participate in communications if the same node address is used for the Master or another Slave node (node address duplication error).

Baud Rate Setting

Pins 7 and 8 are used to set the baud rate as shown in the following table. (These pins are factory-set to OFF.)

Pin 7	Pin 8	Baud rate
OFF	OFF	125 kbps (default)
ON	OFF	250 kbps
OFF	ON	500 kbps
ON	ON	Not allowed.

Note

1. Always turn OFF the Slave's power supply (including the communications power supply) before changing the baud rate setting.
2. Set the same baud rate on all of the nodes (Master and Slaves) in the Network. Any Slaves with baud rates different from the Master's rate won't be able to participate in communications. Furthermore, a node with an incorrect baud rate may cause communications errors between nodes with correct baud rate settings.

Setting Pins 9 and 10

The functions of pins 9 and 10 differ for inputs and outputs, as shown in the following diagram.

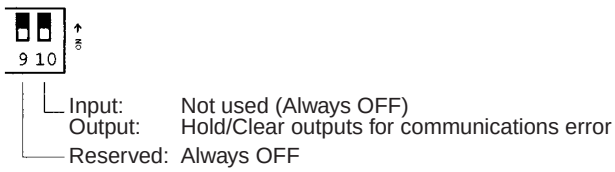

Pin 9: Reserved (Always OFF)

Pin 10: As follows:

Inputs:	No function (Always OFF)
Outputs:	Hold/Clear outputs for communications error
OFF (Clear):	All output data from the Master will be cleared to 0 when a communications error occurs.
ON (Hold):	All output data from the Master will be retained when a communications error occurs.

Pins 9 and 10 are factory-set to OFF.

4-10-2 CQM1 I/O Link Unit: CQM1-DRT21

Specifications

The general specifications for the CQM1-DRT21 I/O Link Unit conform to CQM1 specifications.

Item	Specification
Model number	CQM1-DRT21
Number of I/O points	16 inputs, 16 outputs (32 I/O points total)
Compatible PLCs	All CQM1 PLCs and all CQM1H PLCs.
Max. number of Units	11 Units max. with CQM1H-CPU51-E/61-E PLCs (512 points max.) or CQM1H-CPU11-E/21-E PLCs (256 points max.) 7 Units max. with CQM1-CPU4□-EV1 PLCs (256 points max.) Connection to previous models: CQM1-CPU4□-E: 5 Units max. (192 points max.) CQM1-CPU11-E/21-E: 3 Units max. (128 points max.)
Current consumption	Communications power: 40 mA max. Internal circuits: 80 mA max. (5 V DC)
Weight	185 g max.

General Specifications

Conform to SYSMAC CQM1 specifications.

Components

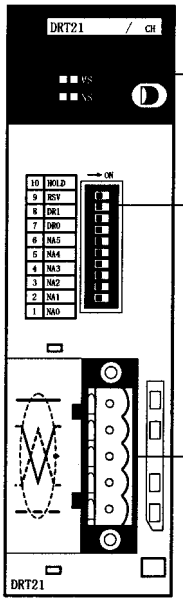

CQM1 Word Allocation

In the CQM1 PLCs, an I/O Link Unit is treated just like an I/O Unit with one input word and one output word, so word allocation is identical to a standard I/O Unit. Words are allocated from the left side of the PLC, beginning with IR

001 for inputs and IR 100 for outputs. The following diagram shows a word allocation example.

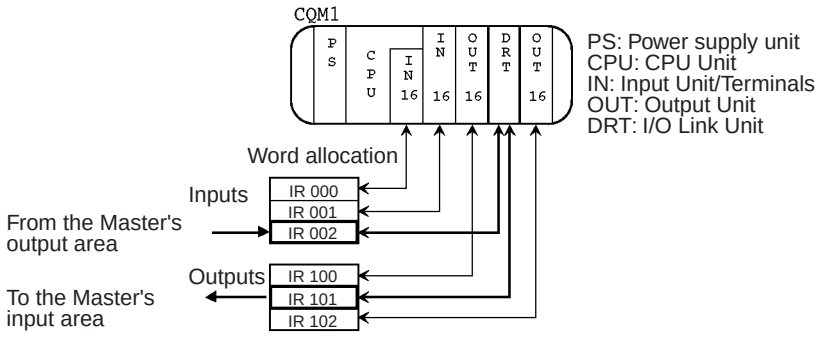

Dimensions

The following diagram shows the dimensions for the CQM1-DRT21 I/O Link Unit. Refer to the PLC's Installation Guide for the dimensions of the Unit when it is mounted to the Backplane. (All dimensions are in mm.)

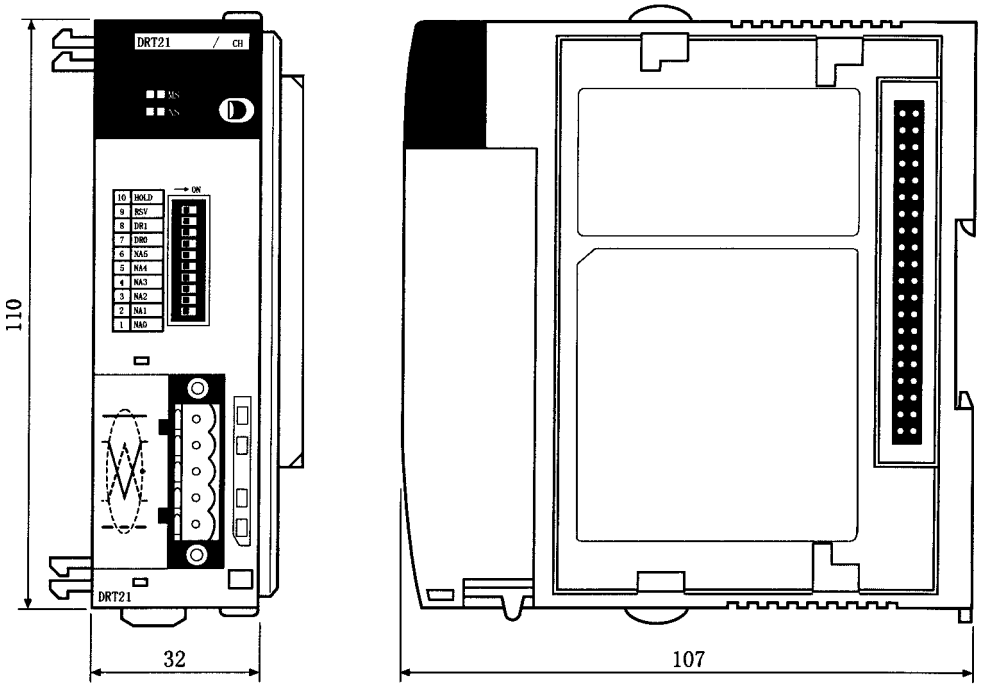

(With the cover removed)

4-10-3 Mounting to Control Panels

The CQM1 I/O Link Unit is assembled with the rest of the Units in the CQM1 PLC for use as one assembled PLC. The CQM1 I/O Link Unit is connected to the PLC just like any other PLC Unit. Refer to the operation manual for the PLC for details.

Note No internal power, I/O power, or I/O wiring is required for the CQM1 I/O Link Unit because it uses internal I/O bits in the CPU Unit to communicate with the master.

SECTION 5
Environment-resistive and Waterproof Slaves

This section provides specifications and describes the components, indicators, switch settings, and other aspects of Environment-resistive Slaves.

5-1 Environment-resistive Slave Specifications 176
5-1-1 Current Consumption, Weight, Degree of Protection 176
5-2 Connecting Communications Cables to Environment-resistive Slaves 177
5-2-1 Example System Assembly 179
5-3 Environment-resistive Terminals (IP66) 179
5-3-1 Node Address and Baud Rate Settings 179
5-3-2 Environment-resistive Terminal (IP66) with 8 Transistor Inputs: DRT1-ID08C (NPN) 180
5-3-3 Environment-resistive Terminal (IP66) with 16 Transistor Inputs: DRT1-HD16C (NPN) and DRT1-HD16C-1 (PNP) 183
5-3-4 Environment-resistive Terminal (IP66) with 8 Transistor Outputs: DRT-OD08C (NPN) 187
5-3-5 Environment-resistive Terminal (IP66) with 16 Transistor Outputs: DRT1-WD16C (NPN) and DRT1-WD16C-1 (PNP) 189
5-3-6 Environment-resistive Terminal (IP66) with 8 Inputs 8 Outputs: DRT1-MD16C (NPN) and DRT1-MD16C-1 (PNP) 193
5-3-7 Mounting in Control Panels 197
5-3-8 Wiring Internal Power Supplies, I/O Power Supplies, and I/O Lines 198
5-4 Waterproof Terminals (IP67) 200
5-4-1 Node Address, Baud Rate, and Output Hold/Clear Settings 200
5-4-2 Waterproof Terminal (IP67) with 4 Transistor Inputs: DRT1-ID04CL (NPN) and DRT1-ID04CL-1 (PNP) 202
5-4-3 Waterproof Terminal (IP67) with 8 Transistor Inputs: DRT1-ID08CL (NPN) and DRT1-ID08CL-1 (PNP) 204
5-4-4 Waterproof Terminal (IP67) with 4 Transistor Outputs: DRT1-OD04CL (NPN) and DRT1-OD04CL-1 (PNP) 207
5-4-5 Waterproof Terminal (IP67) with 8 Transistor Outputs: DRT1-OD08CL (NPN) and DRT1-OD08CL-1 (PNP) 210
5-4-6 Mounting in Control Panels 213
5-4-7 Wiring Internal Power Supplies, I/O Power Supplies, and I/O Lines 213
5-5 B7AC Interface Units 215
5-5-1 Node Address and Baud Rate Settings (DIP Switch 1) 215
5-5-2 Example System Configuration 217
5-5-3 B7AC Interface Unit: DRT1-B7AC 217
5-5-4 Mounting in Control Panels 223
5-5-5 Wiring the Internal Power Supply and Input Lines 224

5-1 Environment-resistive Slave Specifications

This section shows the specifications that are the same for all Environment-resistive Slaves. Differences for particular Slaves are shown in the explanatory page for each Slave.

Item	Environment-resistive Slave Specifications
Communications power supply voltage	11 to 25 V DC (supplied from the communications connector)
Internal power supply voltage	20.4 to 26.4 V DC (24 V DC –15% to 10%)
I/O power supply voltage	20.4 to 26.4 V DC (24 V DC –15% to 10%)
Noise resistance	±1.5 Vp-p, pulse width 0.1 to 1 μs, rise time 1-ns pulse at startup (by noise simulator)
Vibration resistance	10 to 150 Hz, double amplitude 1.0 mm, or 70 m/s^2
Shock resistance	200 m/s^2
Dielectric strength	500 V AC (between insulated circuits)
Insulation resistance	20 MΩ min. (between insulated circuits)
Ambient temperature	Operating: –10 to 55°C Storage: –20 to 65°C
Ambient humidity	25% to 85%
Ambient environment	No corrosive gases.
Degree of protection	DRT1-□D□□C(-1): IP66 DRT1-□D□□CL(-1): IP67 DRT1-B7AC: IP66
Mounting method	For Slaves with IP66 protection: M4 screws (front panel) M5 screws (rear panel) For Slaves with IP67 protection: M5 screws for both front and rear panel
Mounting strength	100 N
Communications connector strength	100 N
Screw tightening torque	Round connector (communications connectors, power supply, I/O): 0.39 to 0.49 N·m - For Slaves with IP66 protection M4 (mounting unit from front panel): 0.6 to 1.18 N·m M5 (mounting unit from rear panel): 1.47 to 1.96 N·m - For Slaves with IP67 protection M5 (mounting unit from front panel): 1.47 to 1.96 N·m M5 (mounting unit from rear panel): 1.47 to 1.96 N·m

5-1-1 Current Consumption, Weight, Degree of Protection

The power consumption, weight and degree of protection of Environment-resistive Slaves are shown below.

Model	Communications Power Supply current	Internal Power Supply current	Weight	Degree of Protection
DRT1-ID04CL(-1)	25 mA max.	(See note.)	180 g max.	IP67
DRT1-ID08C	30 mA max.	50 mA max.	580 g max.	IP66
DRT1-ID08CL(-1)	30 mA max.	(See note.)	240 g max.	IP67
DRT1-HD16C(-1)	30 mA max.	50 mA max.	180 g max.	IP66

Model	Communications Power Supply current	Internal Power Supply current	Weight	Degree of Protection
DRT1-OD04CL(-1)	35 mA max.	(See note.)	180 g max.	IP67
DRT1-OD08C	30 mA max.	50 mA max.	585 g max.	IP66
DRT1-OD08CL(-1)	40 mA max.	(See note.)	240 g max.	IP67
DRT1-WD16C(-1)	30 mA max.	60 mA max.	590 g max.	IP66
DRT1-MD16C(-1)	30 mA max.	50 mA max.	590 g max.	IP66
DRT1-B7AC	70 mA max.	500 mA max.	500 g max.	IP66

Note In these Slaves, the internal power supply shares the communications power supply.

5-2 Connecting Communications Cables to Environment-resistive Slaves

Communications cables are connected to Environment-resistive Slaves (Waterproof Terminals, Environment-resistive Transistor Terminals, and B7AC Interface Units) using round shielded connectors.

Thin communications cable is used with the round shielded connectors, so the cable characteristics (such as the power supply wiring limitations due to voltage drop over distance) are the same as regular thin cable. Slaves that use the regular square connectors can also be connected to the Master Unit through a T-branch Tap.

System with Slaves using Round Shielded Connectors Only

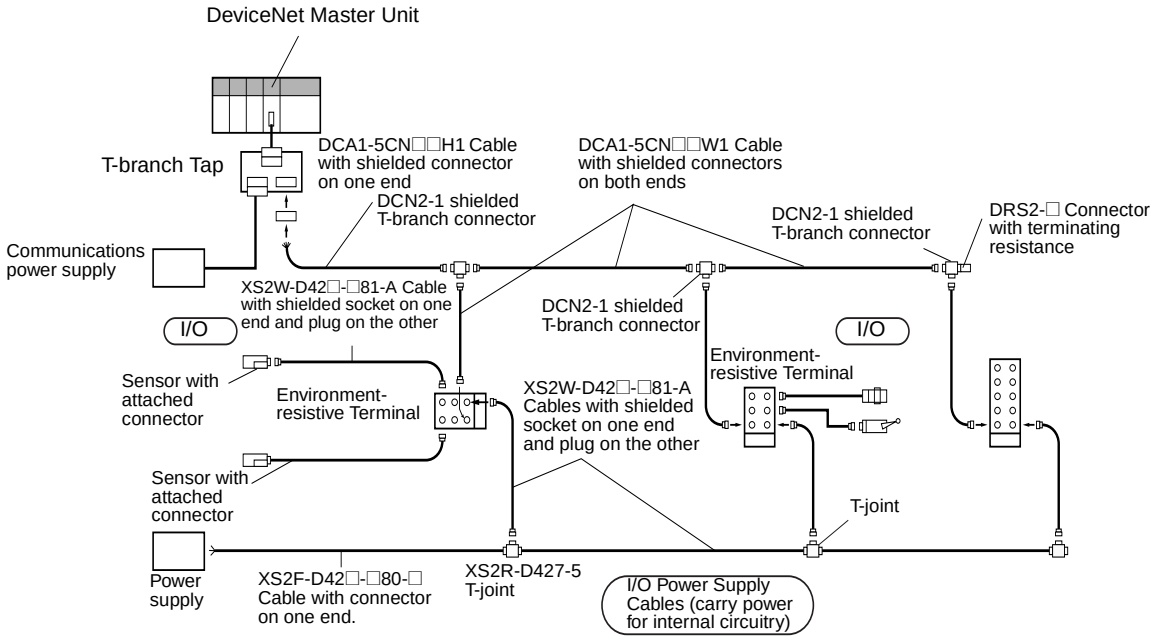

System with Slaves using Round Shielded Connectors and Regular Square Connectors

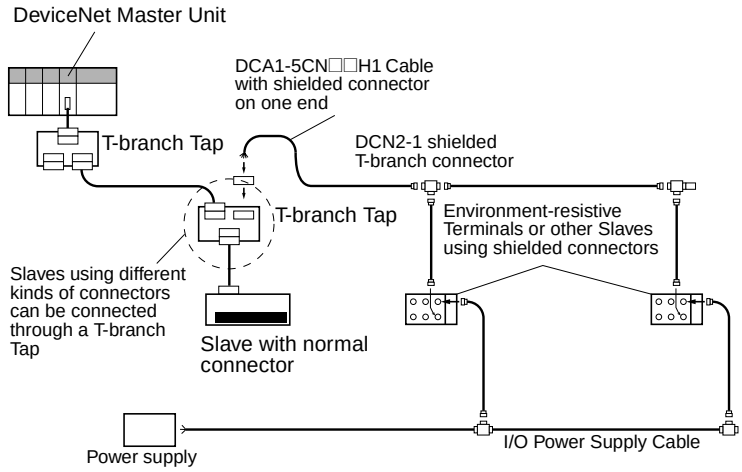

Always use the communications cables listed in the following table to connect Waterproof Terminals, Environment-resistive Transistor Terminals, and B7AC Interface Units.

Model	Description
DCA1-5CN□□W1	Cable with round shielded connectors on both ends 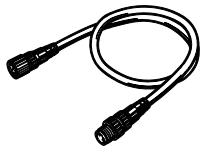
DCA1-5CN□□F1	Cable with round shielded connector (female socket) on one end 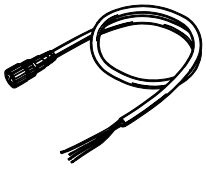
DCA1-5CN□□H1	Cable with round shielded connector (male plug) on one end 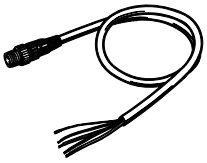
DCN2-1	Shielded T-branch Connector (for 1 branch line) 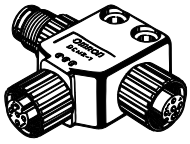

The blank spaces (□□) in the model numbers indicate the cable length in 0.1-m units. For example, add “C5” for a cable 0.5 m long.

Note Standard thin DeviceNet cable is used for these cables, so the cables cannot be used in an environment that is subject to spattering unless steps are taken to protect the cables.

The following connectors with built-in terminating resistors are also available. A Terminating Resistor can be connected to a T-branch Connector.

Model	Description
DRS2-1	Shielded Connector (male plug) with Terminating Resistor
DRS2-2	Shielded Connector (female socket) with Terminating Resistor

Note

1. Standard thin DeviceNet cable is used for cables with shielded connectors, so maximum current is 3 A.
2. Multi-drop wiring cannot be used with shielded connectors. Use T-branch wiring with DCN2-1 T-branch Connectors and cables that have shielded connectors on both ends.
3. The T-branch Connector's communications power supply pin has a rated current capacity of 3 A.
4. A cable with a shielded connector (socket) on one end can be used to connect to a regular DCN1-□C T-branch Tap. A cable with a shielded connector (socket) on one end can also be used to connect to the communications power supply from a T-branch Connector.

5-2-1 Example System Assembly

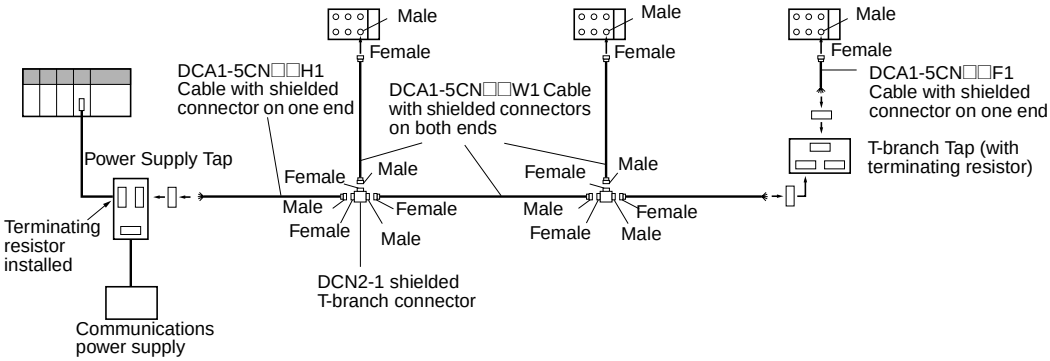

Note Tighten the connector by hand to a torque of 0.39 to 0.49 N·m. If the connector is not tightened sufficiently, it will not provide the expected environmental resistance and may come loose from vibration. Do not use pliers or other tools to tighten the connectors, because the tools may damage the connectors.

5-3 Environment-resistive Terminals (IP66)

5-3-1 Node Address and Baud Rate Settings

This section describes the node address settings and baud rate settings that are common to all of the Environment-resistive Terminals. These settings are made on separate switches, as shown in the following diagrams.

Node address setting: Rotary switches
Baud rate setting: DIP switch pins 1 and 2

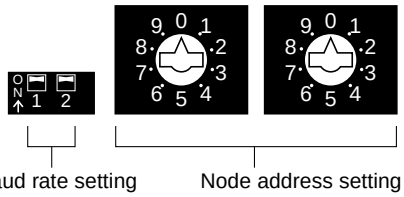

Note The DRT1-□D□□C(-1) Terminals do not have an “output hold/clear setting” for communications errors. When a communications error occurs with a Terminal that has outputs, the corresponding output data from the Master is cleared to 0 (OFF).

Node Address Settings

Each Environment-resistive Terminal’s node address is set in two-digit decimal with the rotary switches. The 10’s digit is set on the left rotary switch and the 1’s digit is set on right rotary switch.

Any node address within the allowed setting range can be used as long as it isn’t already set on another node.

Note The Environment-resistive Terminal won’t be able to participate in communications if the same node address is used for the Master or another Slave node (node address duplication error).

Baud Rate Setting

DIP switch pins 1 and 2 are used to set the baud rate as shown in the following table. (These pins are factory-set to OFF.)

Pin settings		Baud rate
Pin 1	Pin 2	
OFF	OFF	125 kbps (default)
ON	OFF	250 kbps
OFF	ON	500 kbps
ON	ON	Not allowed.

Note

1. Always turn OFF the Slave’s power supply (including the communications power supply) before changing the baud rate setting.
2. Set the same baud rate on all of the nodes (Master and Slaves) in the Network. Any Slaves with baud rates different from the Master’s rate won’t be able to participate in communications. Furthermore, a node with an incorrect baud rate setting may cause communications errors between nodes with correct baud rate settings.

5-3-2 Environment-resistive Terminal (IP66) with 8 Transistor Inputs: DRT1-ID08C (NPN)

Input Specifications

Item	Specification
Model	DRT1-ID08C
Internal I/O common	NPN
Input points	8 points (Uses one word in Master.)
ON voltage	15 V DC min. (between each input terminal and V)
OFF voltage	5 V DC max. (between each input terminal and V)
OFF current	1 mA max.
Input current	6 mA max./point at 24 V DC (between each input terminal and V)

Item	Specification
ON delay time	1.5 ms max.
OFF delay time	2.5 ms max.
Number of circuits	8 points with one common

Components of the DRT1-ID08C

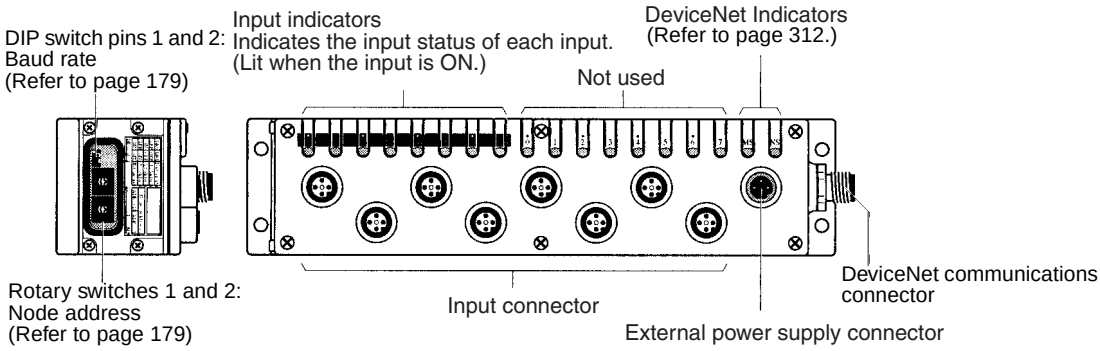

Internal Circuits

The following diagram shows the internal circuits for the DRT1-ID08C Environment-resistive Terminal.

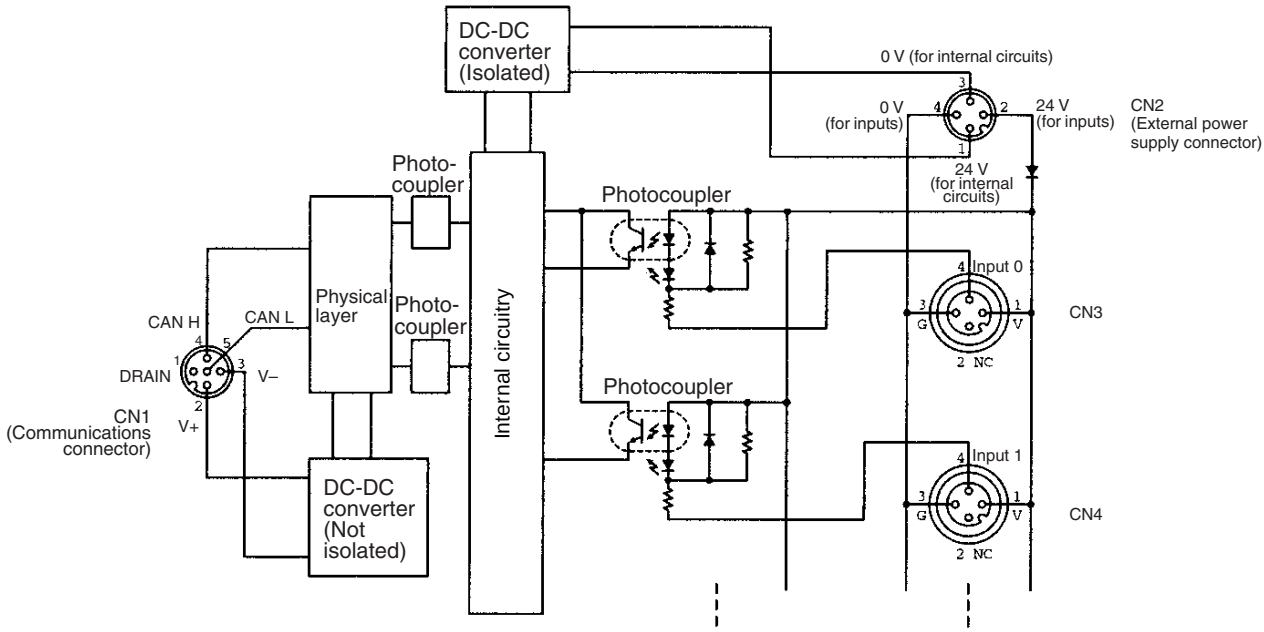

Wiring

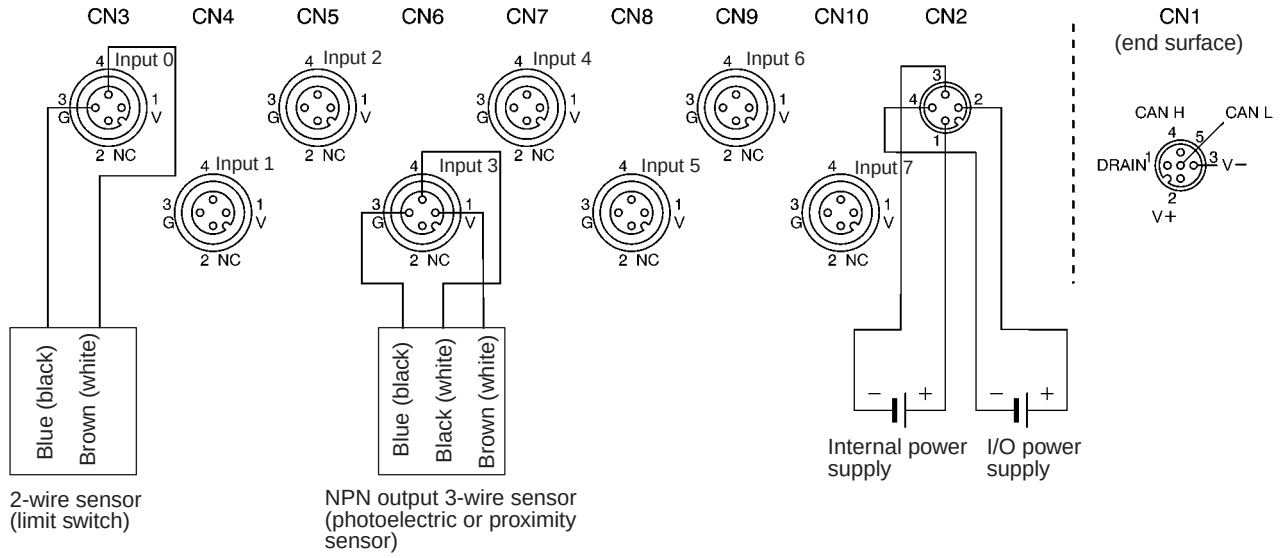

Note 1. External power supply line 0V and input line G are connected internally, as are external power supply line 24V and input line V. When input power is supplied to external power supply connectors, power can be supplied to sensors from input lines G and V provided that the total current does not exceed 1.0 A. If the total current exceeds 1.0 A, the power must not be supplied from the connector; it must be supplied externally instead.

2. Wire colors in parentheses are the previous JIS colors for photoelectric and proximity sensors.

Dimensions

The following diagram shows the dimensions for the DRT1-ID08C Environment-resistive Terminal. All dimensions are in mm.

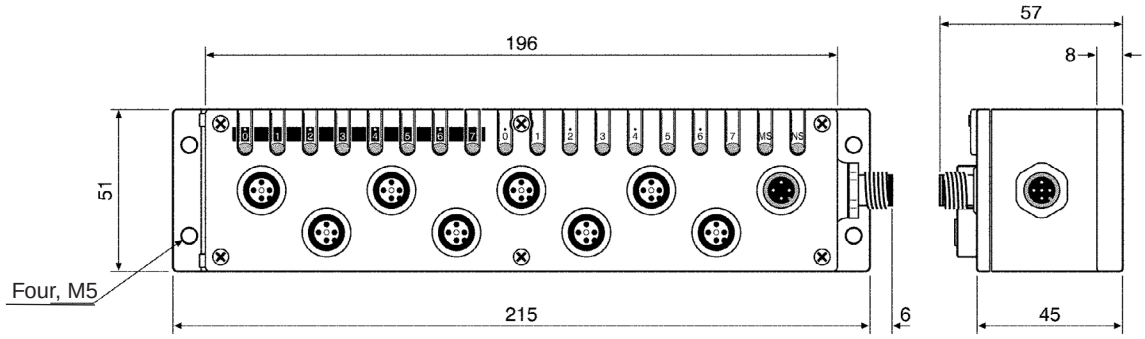

Mounting Holes

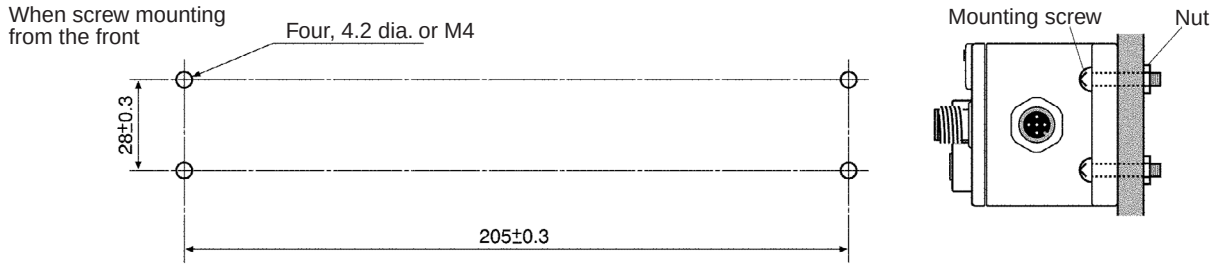

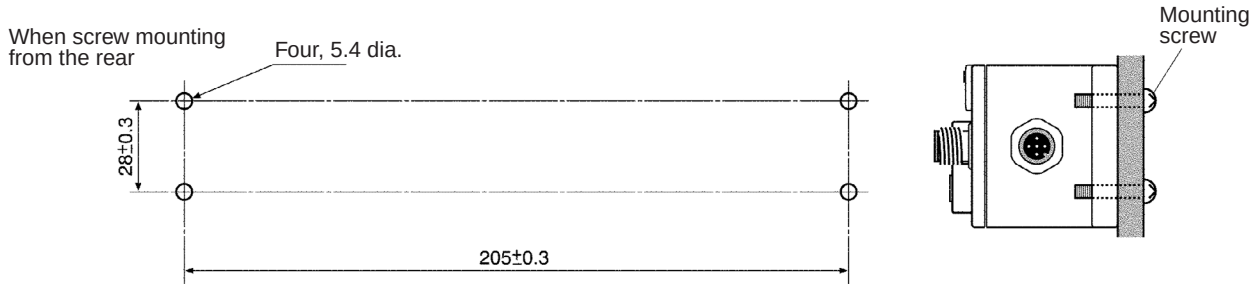

5-3-3 Environment-resistive Terminal (IP66) with 16 Transistor Inputs: DRT1-HD16C (NPN) and DRT1-HD16C-1 (PNP)

Input Specifications

Item	Specification	
Model	DRT1-HD16C	DRT1-HD16C-1
Internal I/O common	NPN	PNP
Input points	16 points	
ON voltage	15 V DC min. (between each input terminal and V)	15 V DC min. (between each input terminal and G)
OFF voltage	5 V DC max. (between each input terminal and V)	5 V DC max. (between each input terminal and G)
OFF current	1 mA max.	
Input current	6 mA max./point at 24 V DC (between each input terminal and V)	6 mA max./point at 24 V DC (between each input terminal and G)
ON delay time	1.5 ms max.	
OFF delay time	2.5 ms max.	
Number of circuits	16 points with one common	

Components of the DRT1-HD16C and DRT1-HD16C-1

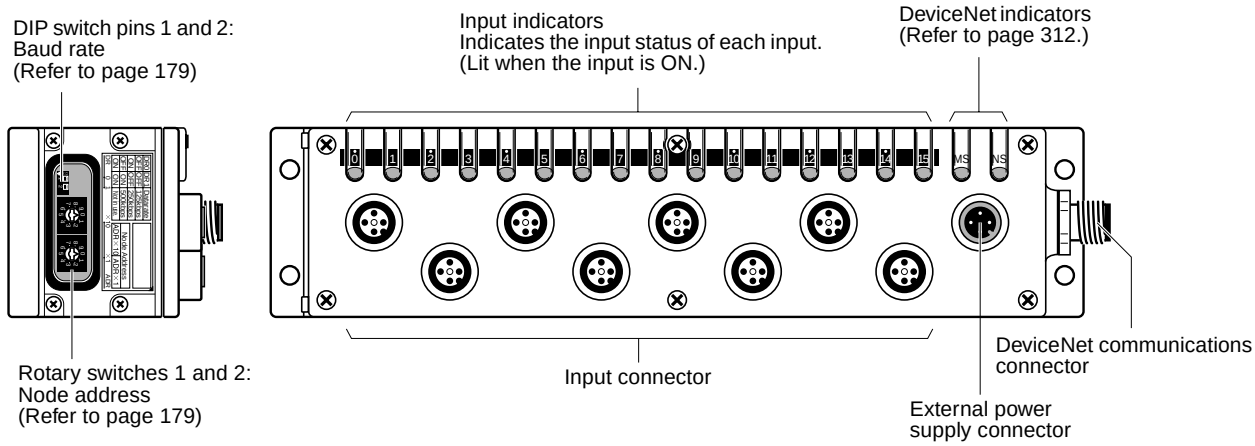

Internal Circuits

The following diagram shows the internal circuits for the DRT1-HD16C Environment-resistive Terminal (NPN).

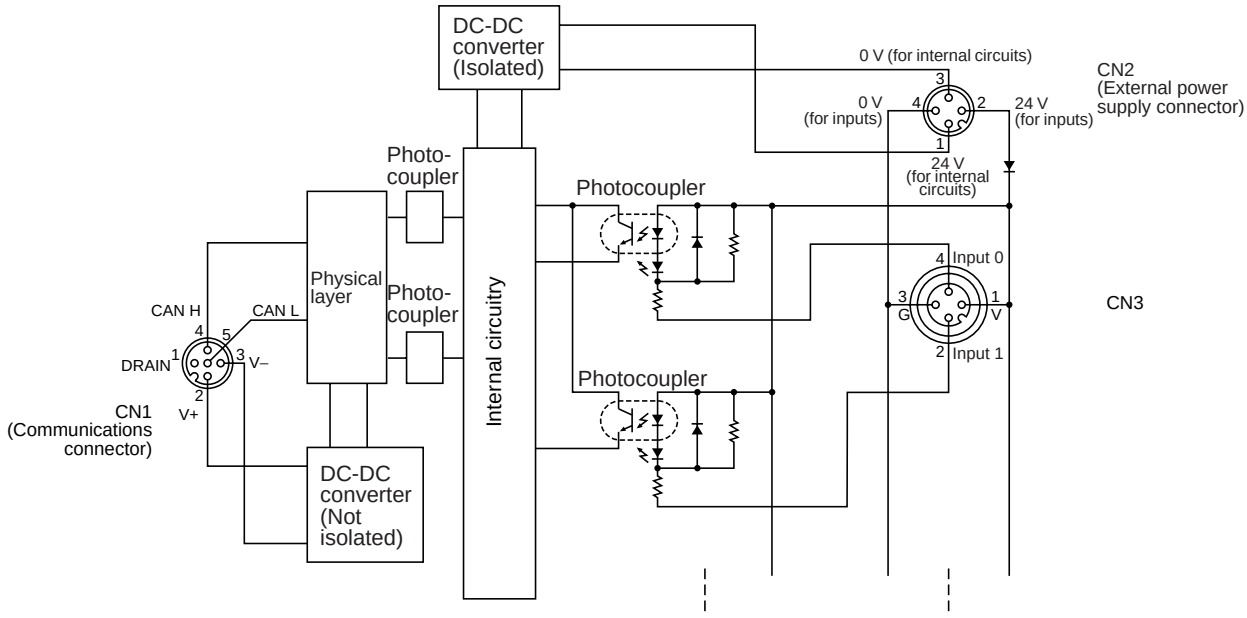

The following diagram shows the internal circuits for the DRT1-HD16C-1 Environment-resistive Terminal (PNP).

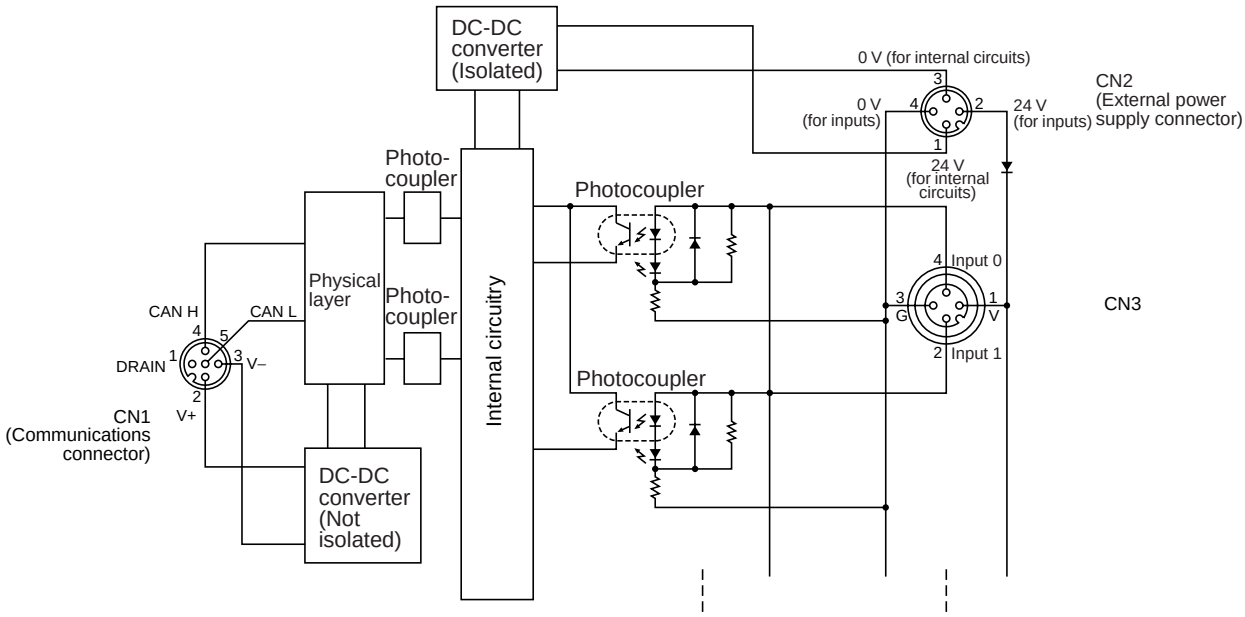

Wiring

The following diagram shows the wiring of the DRT1-HD16C Environment-resistive Terminal (NPN).

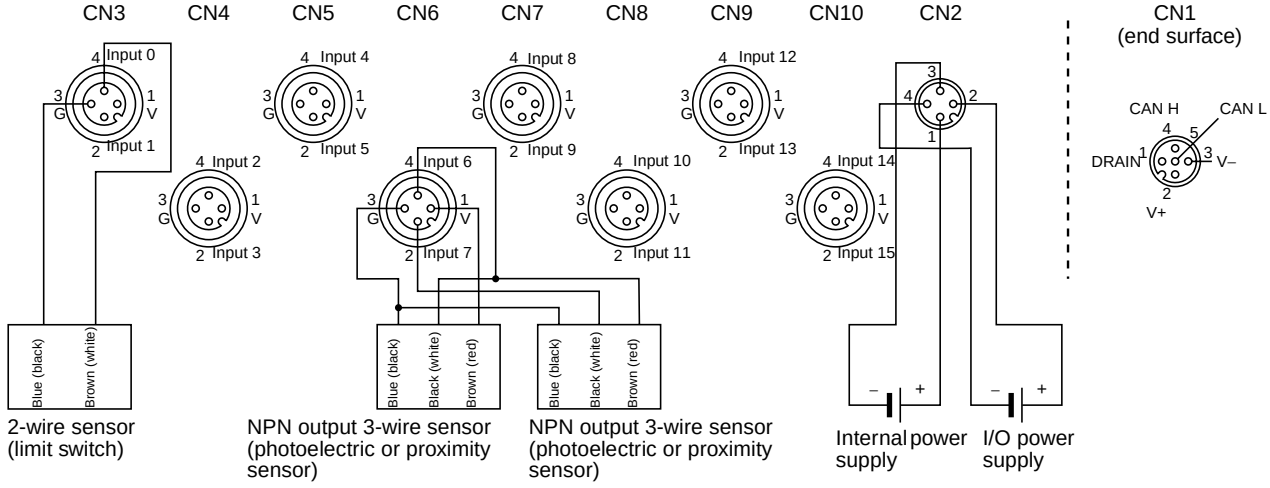

The following diagram shows the wiring of the DRT1-HD16C-1 Environment-resistive Terminal (PNP).

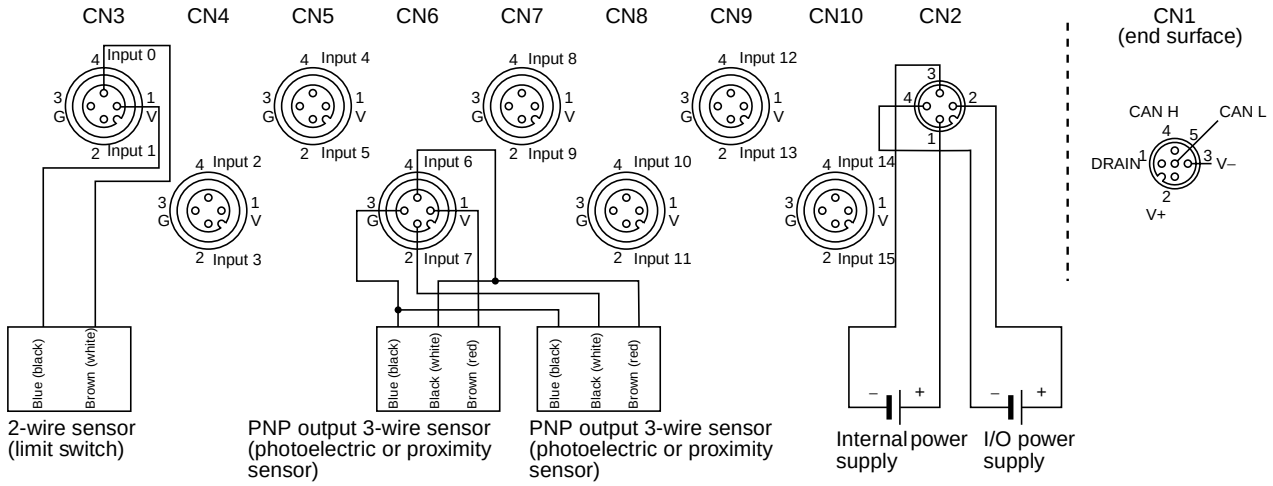

Note

1. External power supply line 0V and input line G are connected internally, as are external power supply line 24V and input line V. When input power is supplied to external power supply connectors, power can be supplied to sensors from input lines G and V provided that the total current does not exceed 1.0 A. If the total current exceeds 1.0 A, the power must not be supplied from the connector; it must be supplied externally instead.
2. Wire colors in parentheses are the previous JIS colors for photoelectric and proximity sensors.

Dimensions

The following diagram shows the dimensions for the DRT1-HD16C and DRT1-HD16C-1 Environment-resistive Terminals. All dimensions are in mm.

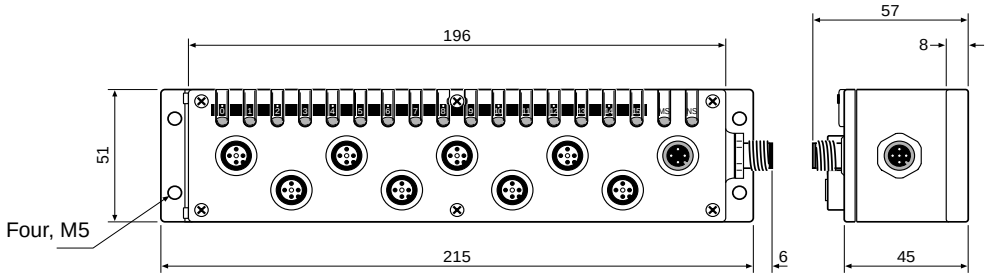

Mounting Holes

When screw mounting from the front

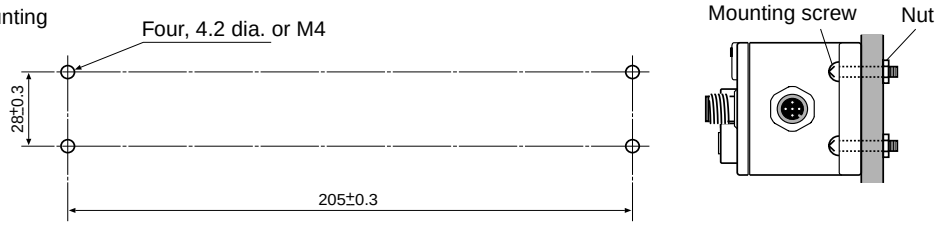

When screw mounting from the rear

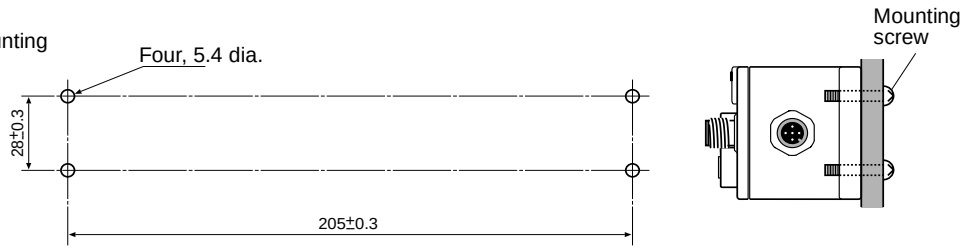

5-3-4 Environment-resistive Terminal (IP66) with 8 Transistor Outputs: DRT-OD08C (NPN)

Output Specifications

Item	Specification
Model	DRT1-OD08C
Internal I/O common	NPN
Output points	8 points (Uses one word in Master.)
Rated output current	0.3 A/point, 2.4 A/common
Residual voltage	1.2 V max. (at 0.3 A, between each output terminal and G)
Leakage current	0.1 mA max.
ON delay time	0.5 ms max.
OFF delay time	1.5 ms max.
Number of circuits	8 points with one common

Components of the DRT1-OD08C

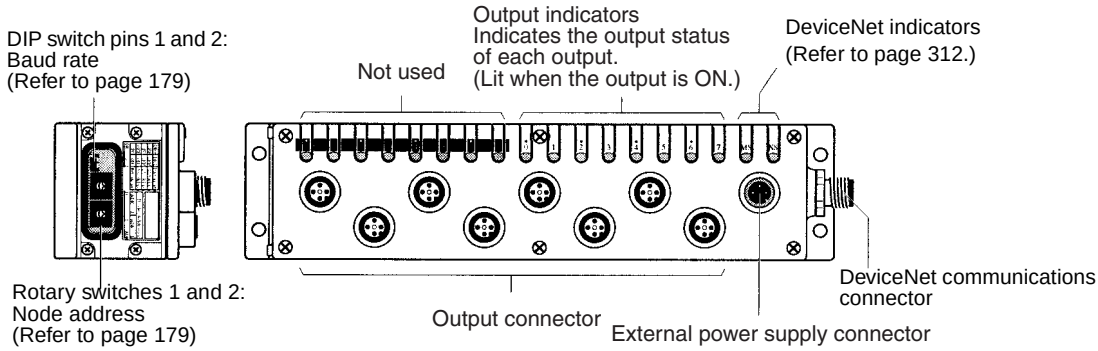

Internal Circuits

The following diagram shows the internal circuits for the DRT1-OD08C Environment-resistive Terminal.

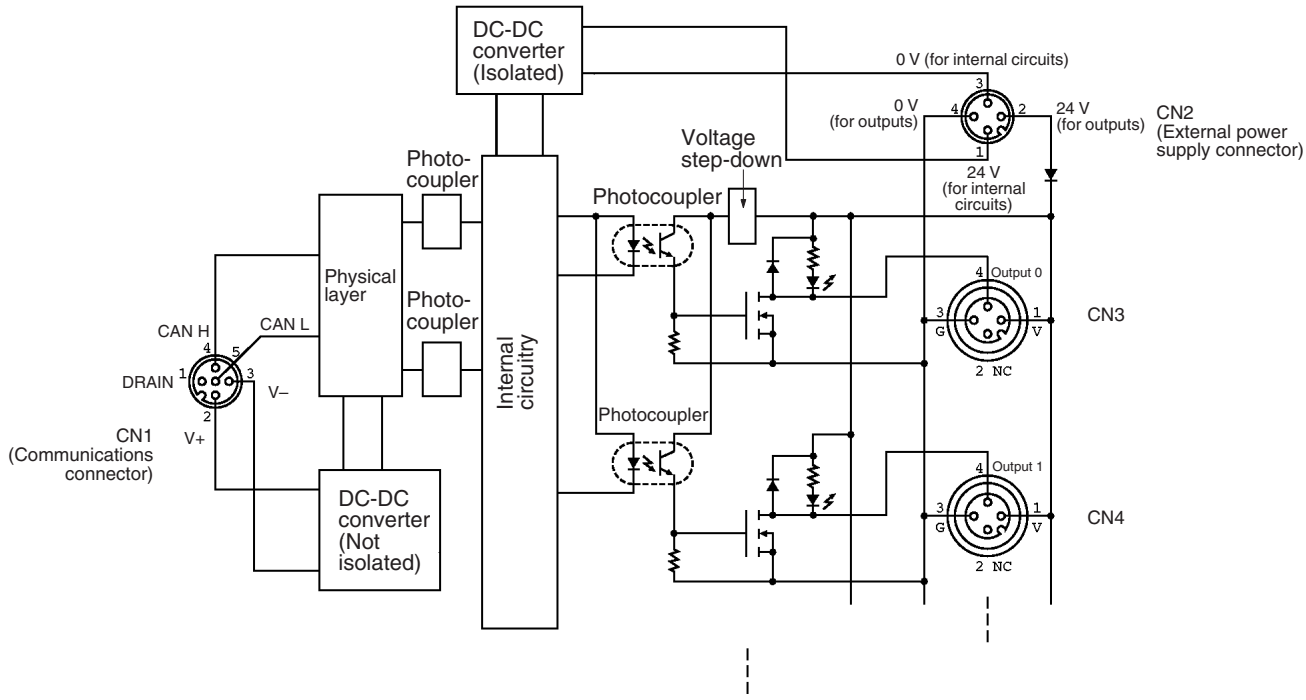

Wiring

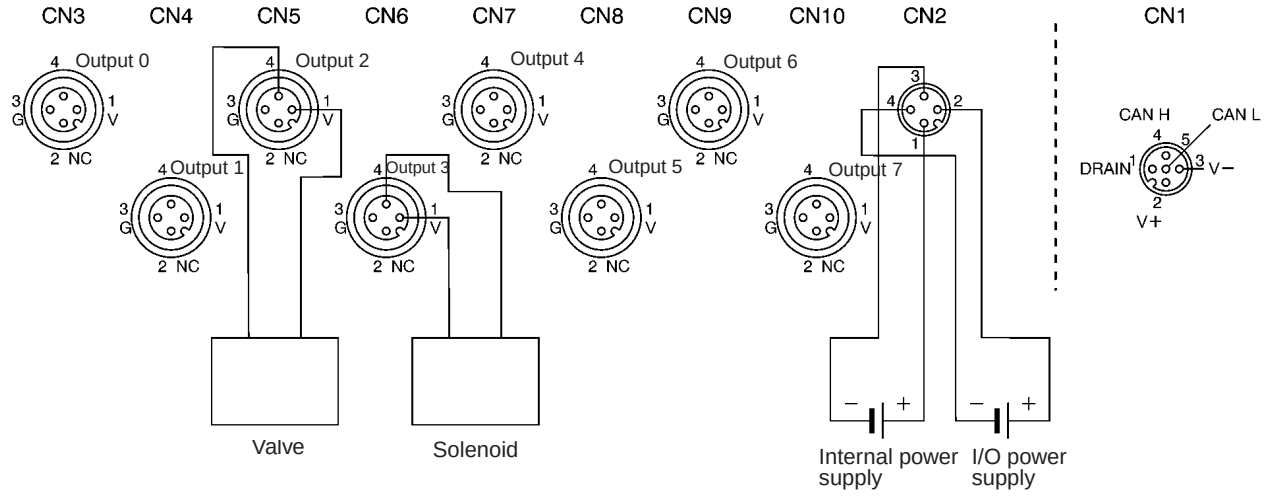

Note External power supply line 0V and output line G are connected internally, as are external power supply line 24V and output line V. When output power is supplied to external power supply connectors, power can be supplied to output devices from output lines G and V provided that the total current does not exceed 2.4 A. If the total current exceeds 2.4 A, the power must not be supplied from the connector; it must be supplied externally instead.

Dimensions

The following diagram shows the dimensions for the DRT1-OD08C Environment-resistive Terminal. All dimensions are in mm.

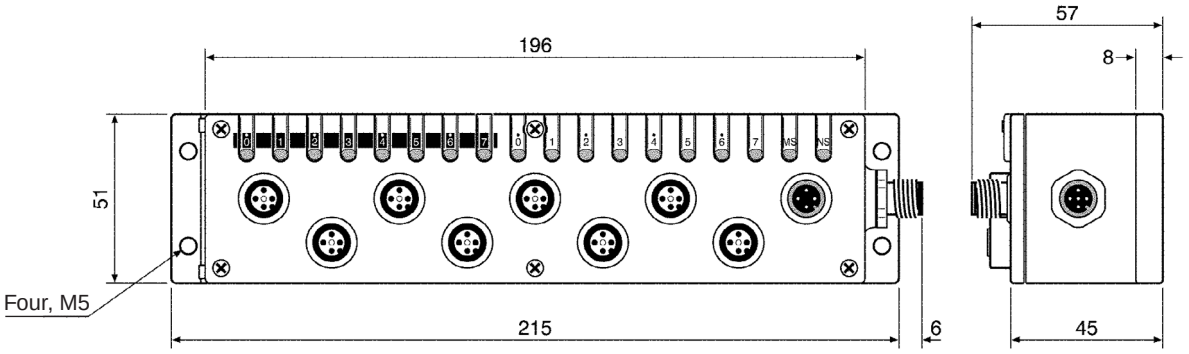

Mounting Holes

When screw mounting from the front

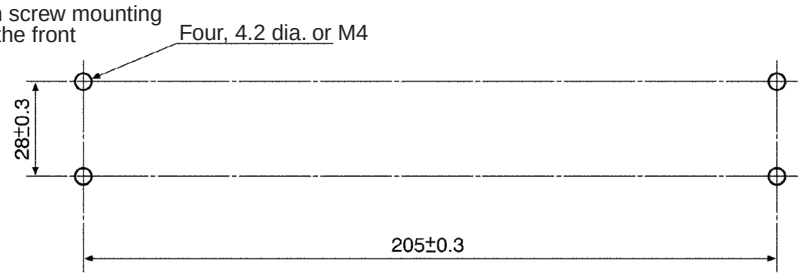

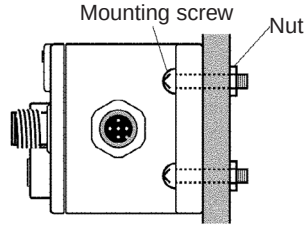

When screw mounting from the rear

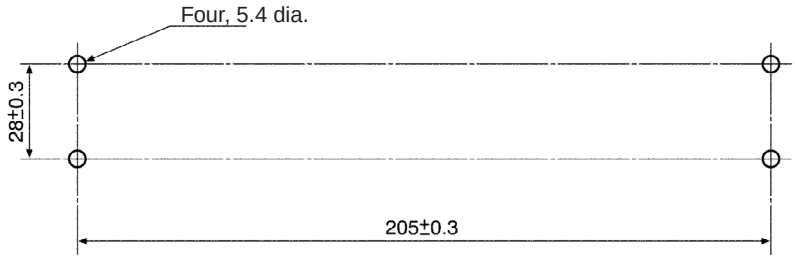

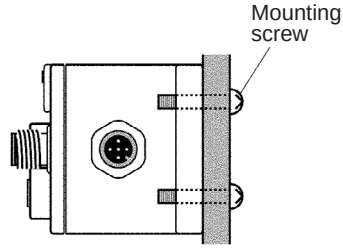

5-3-5 Environment-resistive Terminal (IP66) with 16 Transistor Outputs: DRT1-WD16C (NPN) and DRT1-WD16C-1 (PNP)

Output Specifications

Item	Specification	
Model	DRT1-WD16C	DRT1-WD16C-1
Internal I/O common	NPN	PNP
Output points	16 points	
Rated output current	0.3 A/point, 2.4 A/common	
Residual voltage	1.2 V max. (at 0.3 A, between each output terminal and G)	1.2 V max. (at 0.3 A, between each output terminal and V)
Leakage current	0.1 mA max.	
ON delay time	0.5 ms max.	
OFF delay time	1.5 ms max.	
Number of circuits	16 points with one common	

Components of the DRT1-WD16C and DRT1-WD16C-1

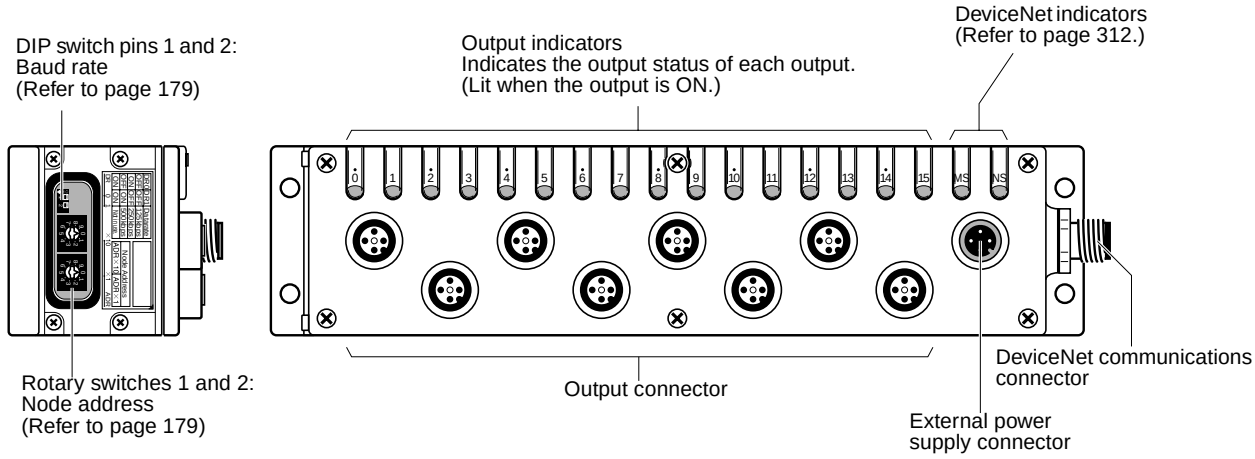

Internal Circuits

The following diagram shows the internal circuits for the DRT1-WD16C Environment-resistive Terminal (NPN).

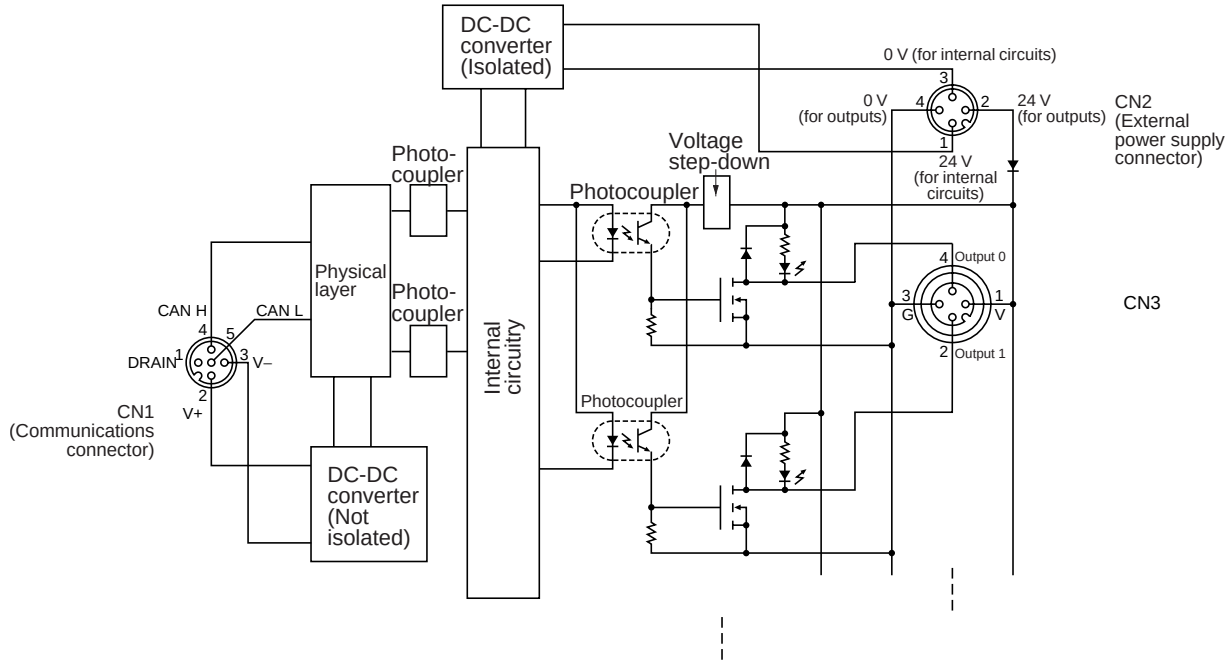

The following diagram shows the internal circuits for the DRT1-WD16C-1 Environment-resistive Terminal (PNP).

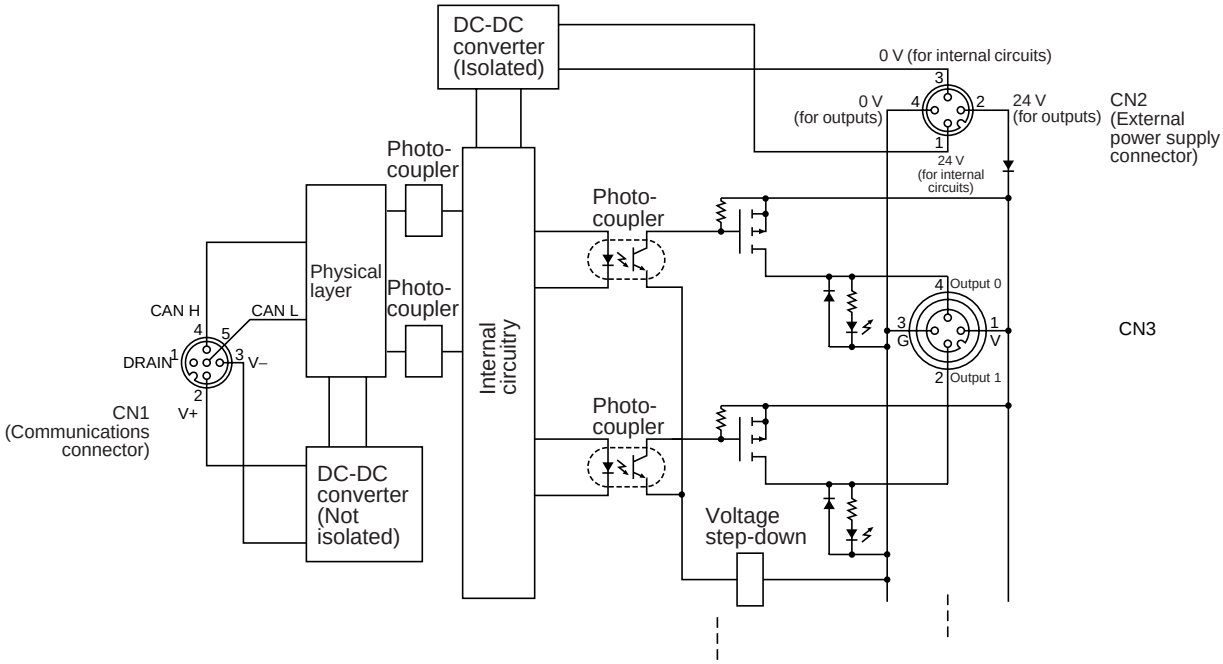

Wiring

The following diagram shows the wiring of the DRT1-WD16C Environment-resistive Terminal (NPN).

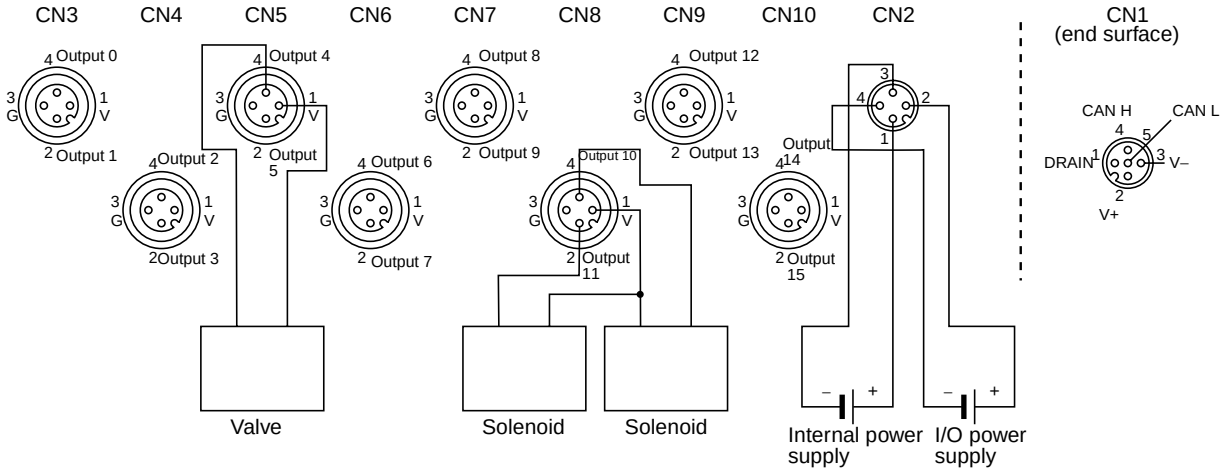

The following diagram shows the wiring of the DRT1-WD16C-1 Environment-resistive Terminal (PNP).

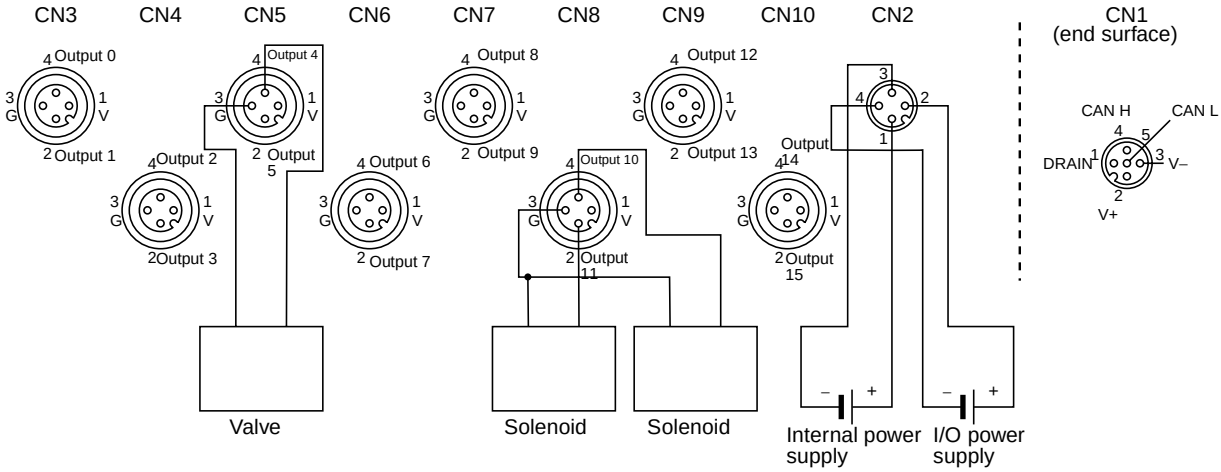

Note External power supply line 0V and output line G are connected internally, as are external power supply line 24V and output line V. When output power is supplied to external power supply connectors, power can be supplied to output devices from output lines G and V provided that the total current does not exceed 2.4 A. If the total current exceeds 2.4 A, the power must not be supplied from the connector; it must be supplied externally instead.

Dimensions

The following diagram shows the dimensions for the DRT1-WD16C and DRT1-WD16C-1 Environment-resistive Terminals. All dimensions are in mm.

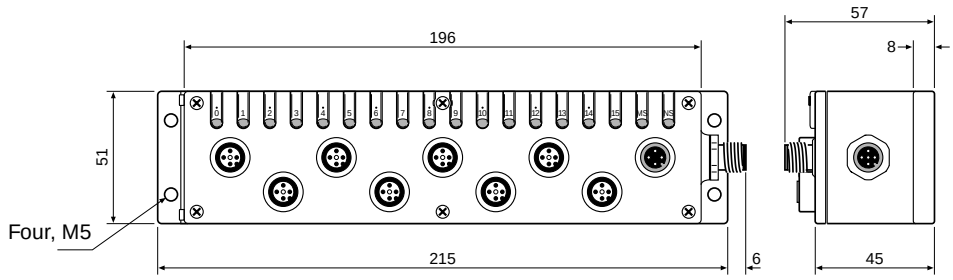

Mounting Holes

When screw mounting from the front

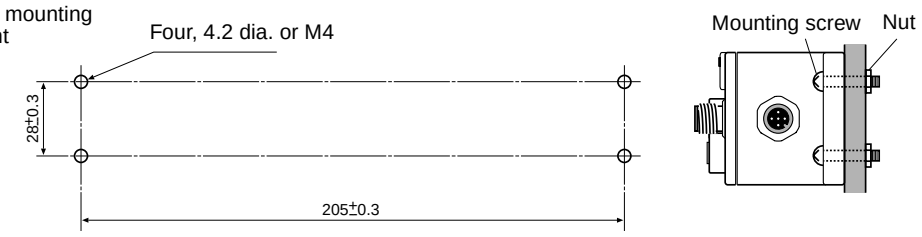

When screw mounting from the rear

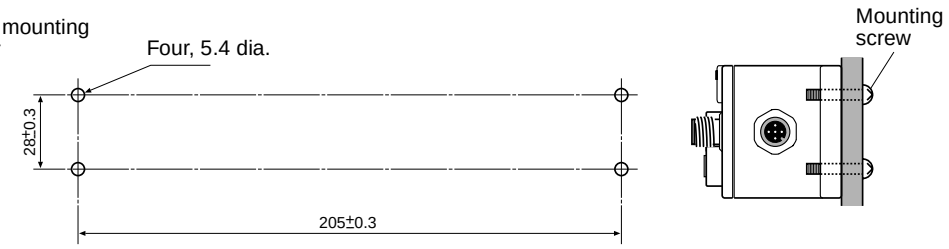

5-3-6 Environment-resistive Terminal (IP66) with 8 Inputs 8 Outputs: DRT1-MD16C (NPN) and DRT1-MD16C-1 (PNP)

Specifications

Input Specifications

Item	Specification	
Model	DRT1-MD16C	DRT1-MD16C-1
Internal I/O common	NPN	PNP
Input points	8 points (Uses one word in Master.)	
ON voltage	15 V DC min. (between each input terminal and V)	15 V DC min. (between each input terminal and G)
OFF voltage	5 V DC max. (between each input terminal and V)	5 V DC max. (between each input terminal and G)
OFF current	1 mA max.	
Input current	6 mA max./point at 24 V DC (between each input terminal and V)	6 mA max./point at 24 V DC (between each input terminal and G)
ON delay time	1.5 ms max.	
OFF delay time	2.5 ms max.	
Number of circuits	8 points with one common	

Output Specifications

Item	Specification	
Model	DRT1-MD16C	DRT1-MD16C-1
Internal I/O common	NPN	PNP
Output points	8 points (Uses one word in Master.)	
Rated output current	0.3 A/point, 2.4 A/common	
Residual voltage	1.2 V max. (at 0.3 A, between each output terminal and G)	1.2 V max. (at 0.3 A, between each output terminal and V)
Leakage current	0.1 mA max.	
ON delay time	0.5 ms max.	
OFF delay time	1.5 ms max.	
Number of circuits	8 points with one common	

Components

The following diagram shows the main components of the DRT1-MD16C and DRT1-MD16C Environment-resistive Terminals.

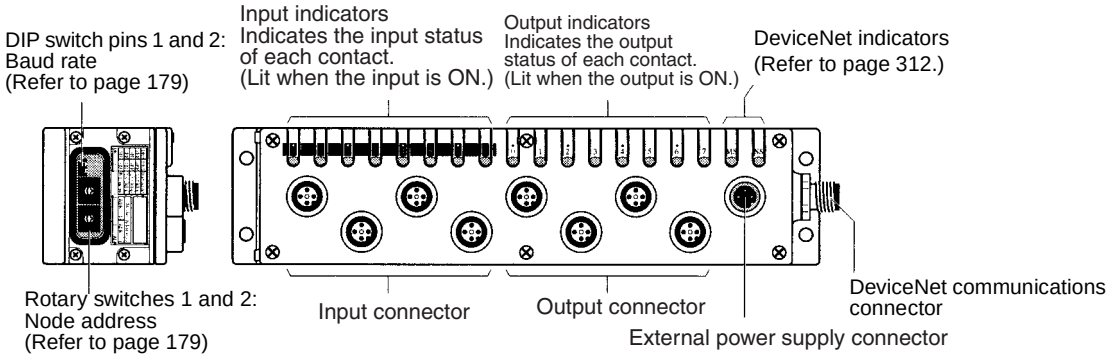

Internal Circuits

The following diagram shows the internal circuits for the DRT1-MD16C (NPN) Environment-resistive Terminal.

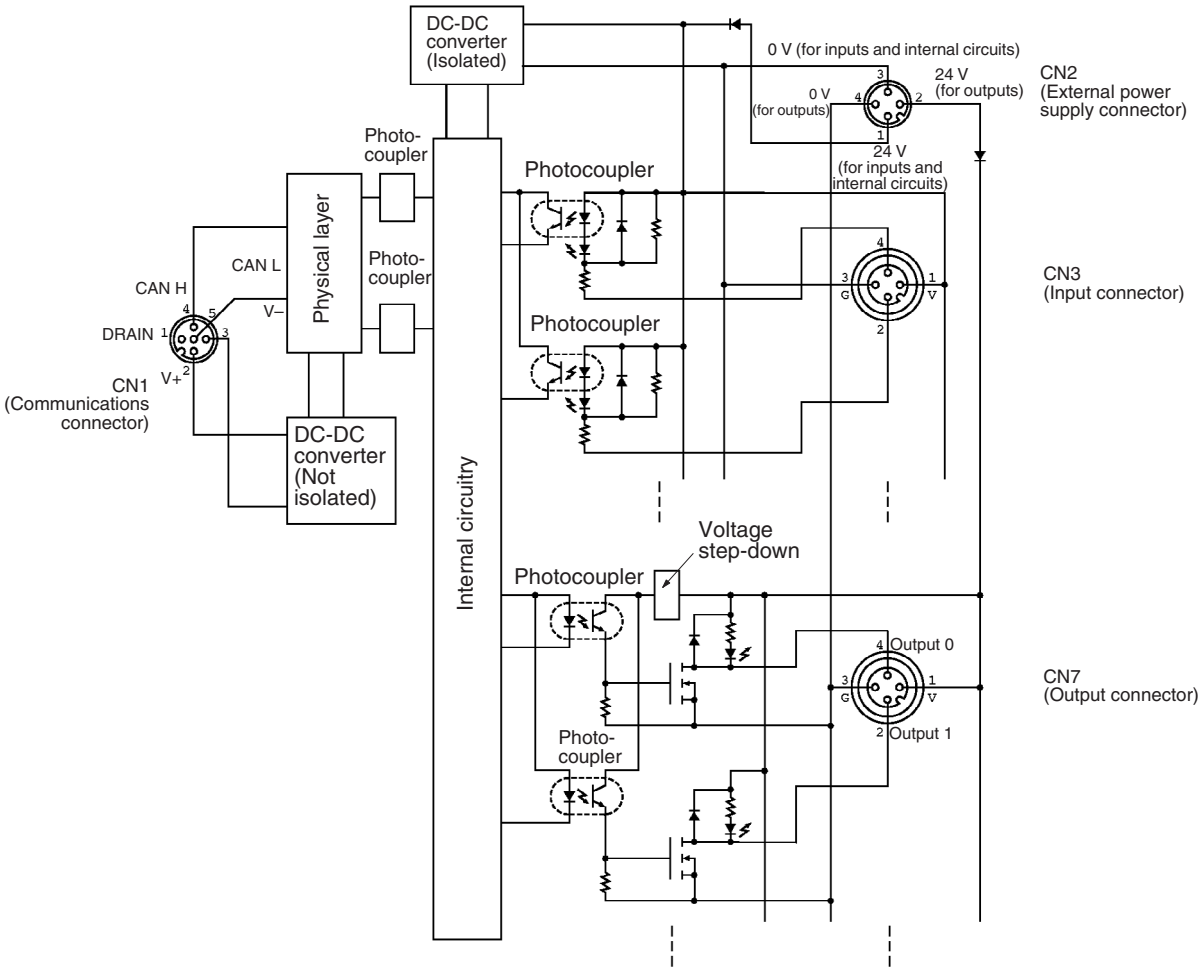

The following diagram shows the internal circuits for the DRT1-MD16C-1 (PNP) Environment-resistive Terminal.

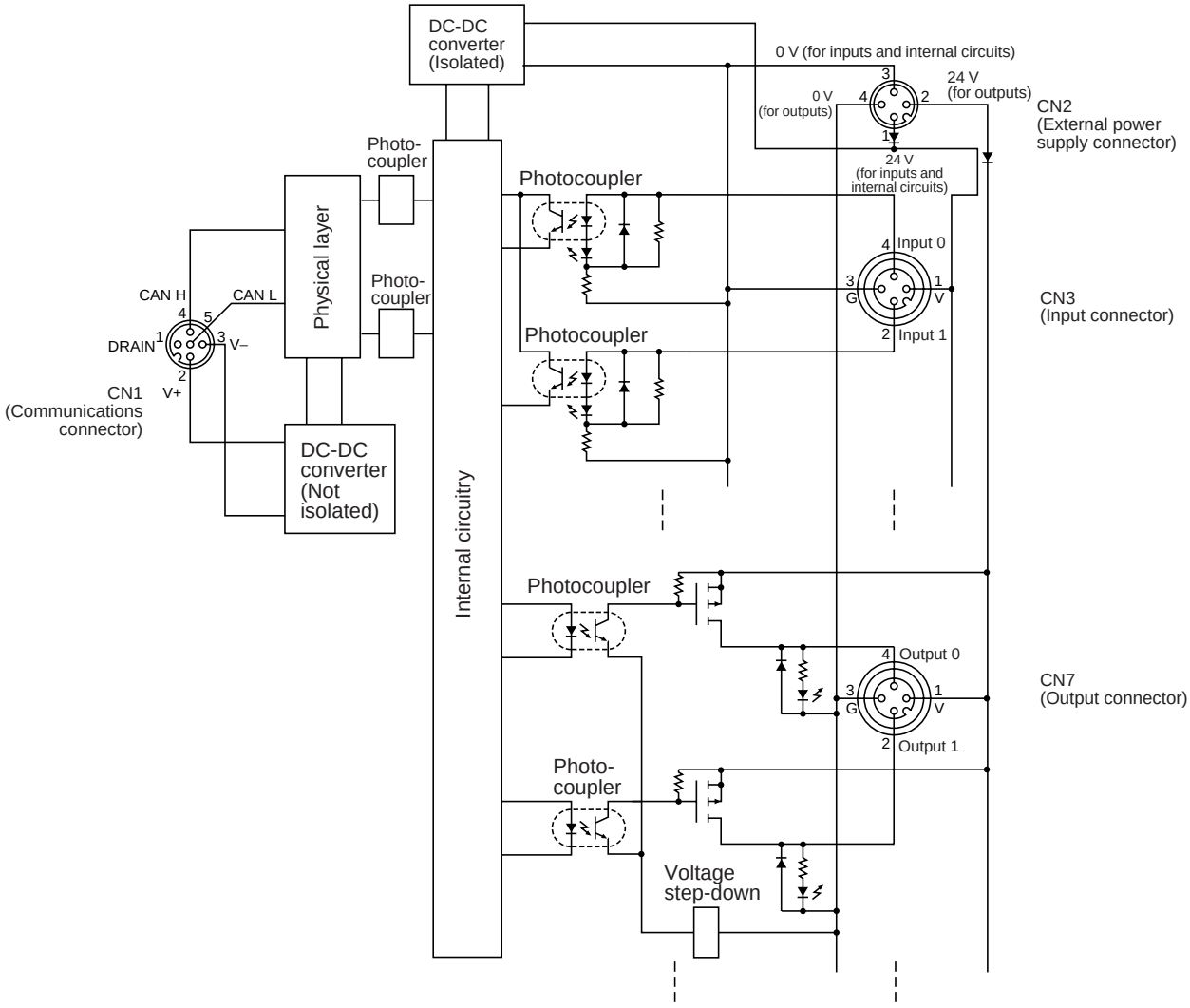

Wiring

The following diagram shows the wiring of the DRT1-MD16C Environment-resistive Terminal (NPN).

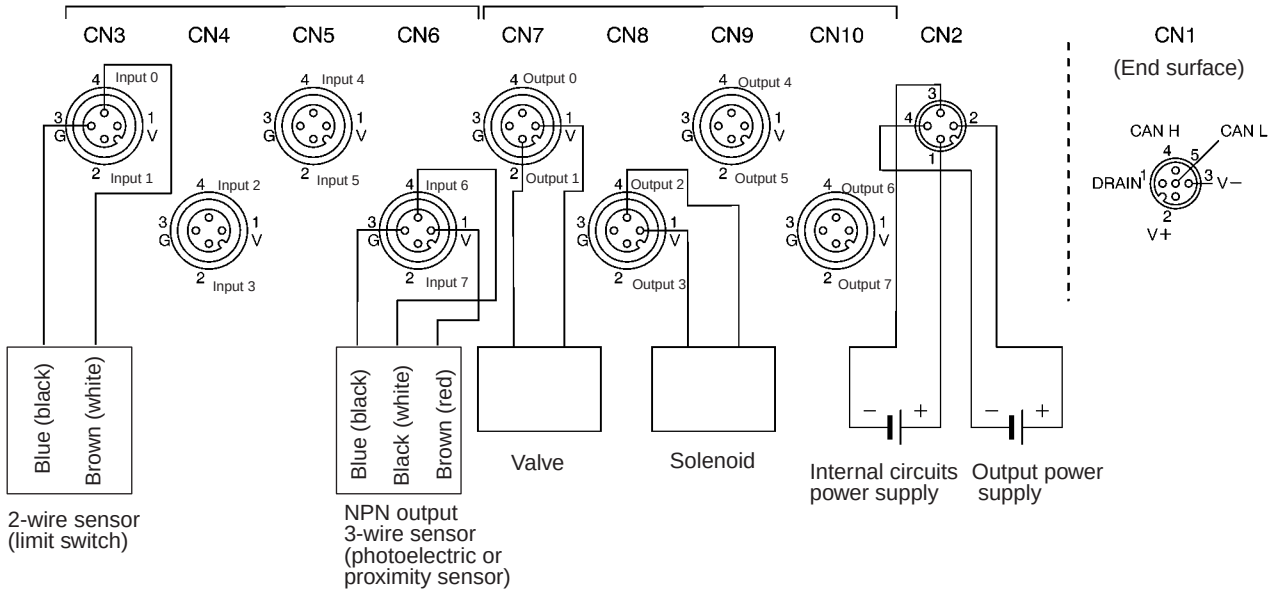

The following diagram shows the wiring of the DRT1-MD16C-1 Environment-resistive Terminal (PNP).

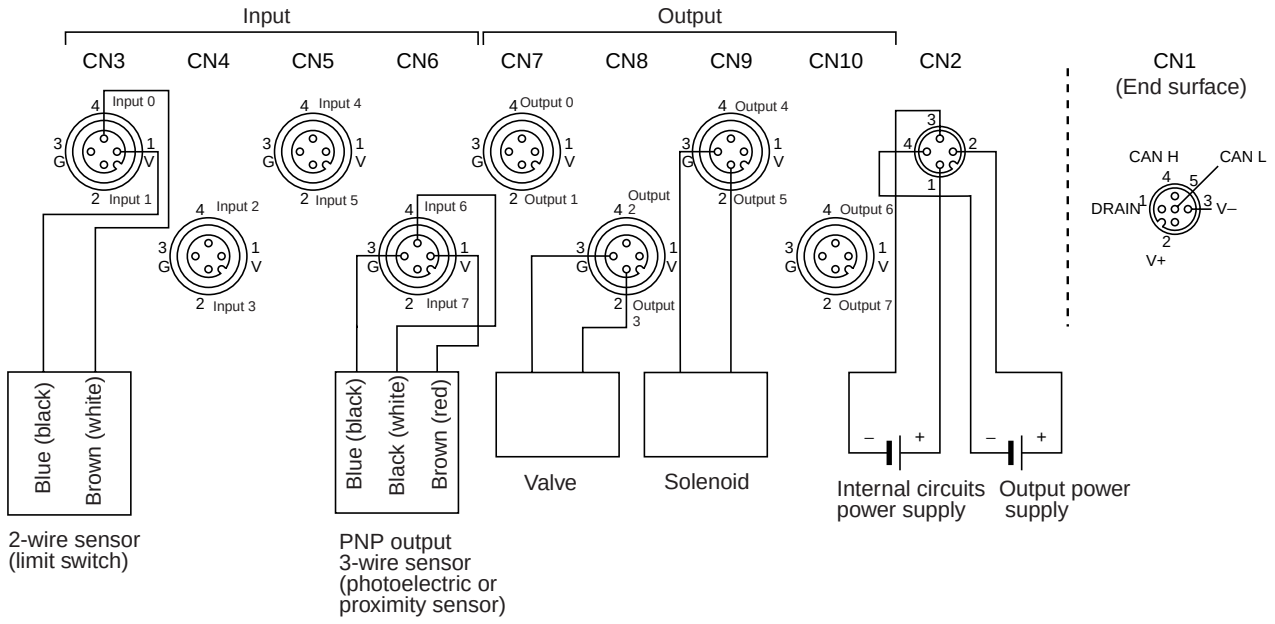

Note

1. External power supply line 0V and input line G are connected internally, as are external power supply line 24V and input line V. When input power is supplied to external power supply connectors, power can be supplied to sensors from input lines G and V provided that the total current does not exceed 1.0 A. If the total current exceeds 1.0 A, the power must not be supplied from the connector; it must be supplied externally instead.
2. External power supply line 0V and output line G are connected internally, as are external power supply line 24V and output line V. When output power is supplied to external power supply connectors, power can be supplied to output devices from output lines G and V provided that the total current

does not exceed 2.4 A. If the total current exceeds 2.4 A, the power must not be supplied from the connector; it must be supplied externally instead.

3. Wire colors in parentheses are the previous JIS colors for photoelectric and proximity sensors.

Dimensions

The following diagram shows the dimensions for the DRT1-MD16C and DRT1-MD16C-1 Environment-resistive Terminals. All dimensions are in mm.

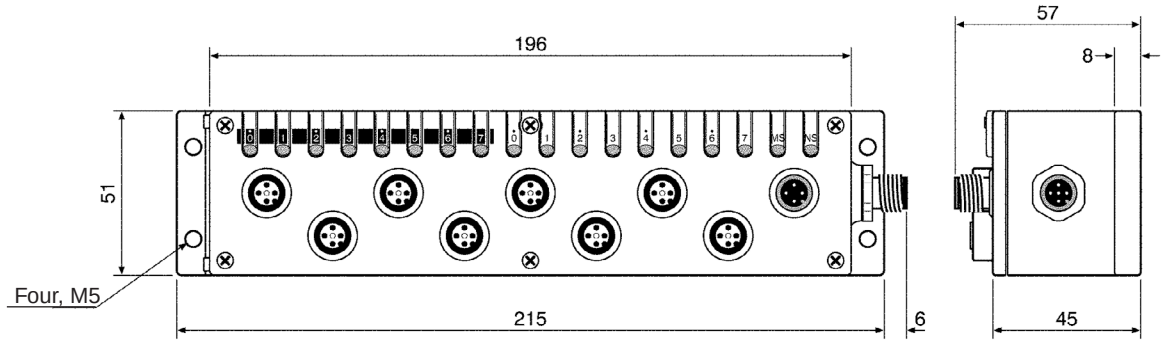

Mounting Holes

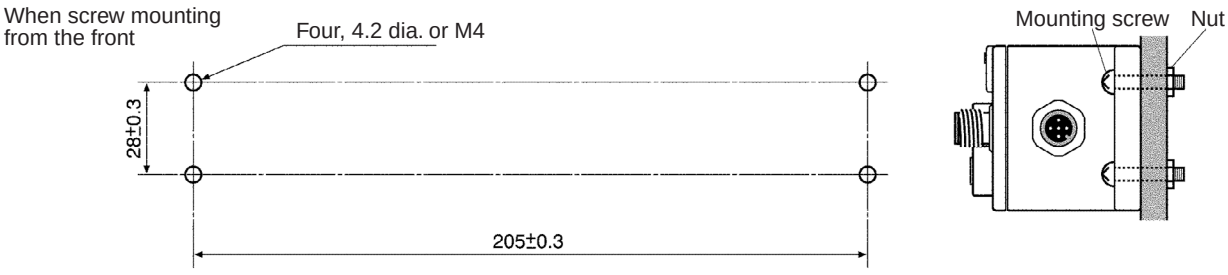

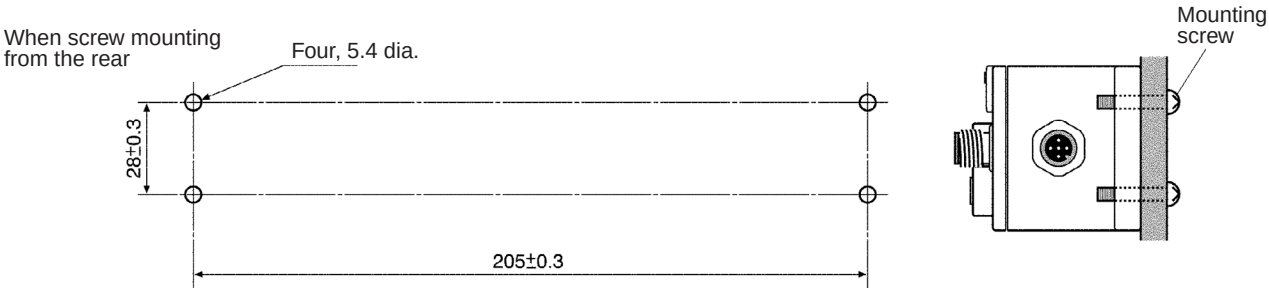

5-3-7 Mounting in Control Panels

Use screws to mount an Environment-resistive Terminal in a control panel. These Terminals cannot be mounted on a DIN Track.

Attaching the Terminal from the Front

The Terminals are tapped with M5 threads, so use M4 screws to clear the threads and attach the Terminal to the control panel from the front. Drill the mounting holes in the control panel according to the dimensions shown in the dimensions diagrams and secure the Terminal with M4 screws. The appropriate tightening torque is 0.6 to 1.18 N·m.

Attaching the Terminal from the Rear

Drill the mounting holes in the control panel according to the dimensions shown in the dimensions diagrams and secure the Terminal with M5 screws. The appropriate tightening torque is 1.47 to 1.96 N·m.

Installation Direction

The Terminal can be mounted in any direction. Any one of the following 6 directions is acceptable.

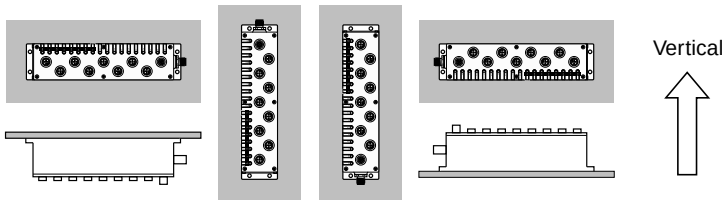

5-3-8 Wiring Internal Power Supplies, I/O Power Supplies, and I/O Lines

Wiring the Internal Power Supply and I/O Power Supply

The internal power supply and I/O power supply are supplied from the external power supply connectors. Connect the external power supply to the Terminal with an XS2-series Round Waterproof Connector listed in the following table.

Compatible Connectors

Connector	Model number
Cable with connectors on both ends (socket and plug)	XS2W-D42□-□81-□
Cable with connector on one end (female socket)	XS2F-D42□-□80-□
Connector socket assembly (female) (Crimp-connector or solder type)	XS2C-D4□□
T-joint	CS2R-D427-5

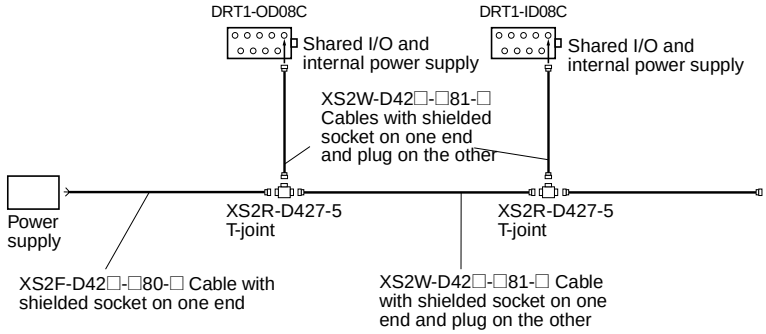

Note

1. Tighten the connector by hand to a torque of 0.39 to 0.49 N·m. If the connector is not tightened sufficiently, it will not provide the expected environmental resistance and may come loose from vibration. Do not use pliers or other tools to tighten the connectors, because the tools may damage the connectors.
2. The same I/O power supply can be used for both input and output devices, but the noise from the output devices may cause the input devices to malfunction. Use separate power supplies if possible.

I/O Wiring

Connect the I/O Wiring to the Environment-resistive Terminal with the XS2-series Round Waterproof Connectors listed in the following table.

Compatible Connectors

Connector	Model number
Cable with connector on one end (male plug)	XS2H-D421-□80-A
Cable with connectors on both ends (socket and plug)	XS2W-D42□-□81-A
Connector plug assembly (male) (Crimp-connector or solder type)	XS2G-D4□□

Sensors that are pre-wired with a connector can be connected directly.

Refer to the Catalog or manual for details on the device's connections before connecting any device.

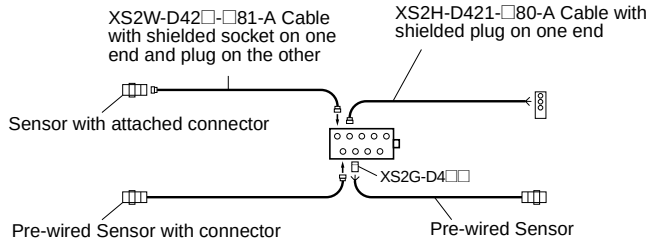

Note 1. Refer to the *OMRON Sensors Catalog (X42-E1-3)* for more details on the sensor connections and Round Waterproof Connectors.

2. One of the Y-joints listed in the following table will be needed when connecting sensors or limit switches to an Environment-resistive Terminal with 16 inputs (DRT1-HD16C(-1)) or 16 outputs (DRT1-WD16C(-1)).

Connector	Model number
Y-joint with plug/socket (with cable)	XS2R-D426-□11F
Y-joint with plug/socket (no cable)	XS2R-D426-1

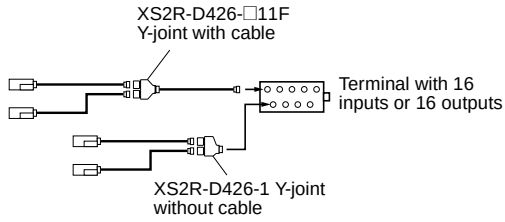

Note An XS2G Connector Assembly (screw-in wire connection) cannot be connected to a Y-joint Connector. A crimp-connector or soldered connector can be connected to a a Y-joint Connector.

XS2R-D426-□11F Y-joint Connector with Cable

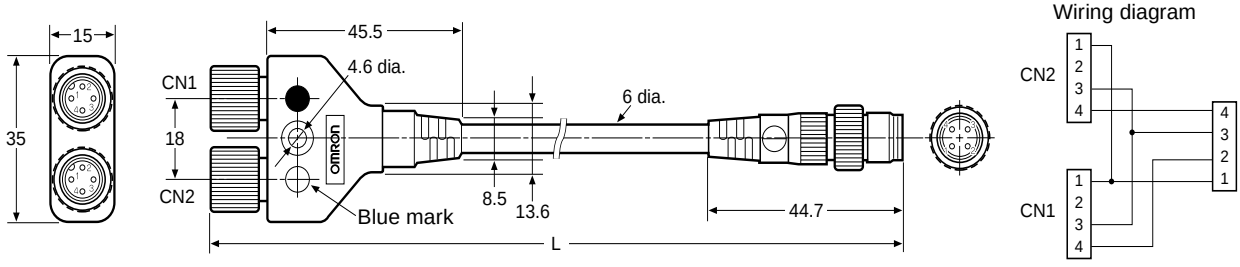

XS2R-D426-1 Y-joint Connector without Cable

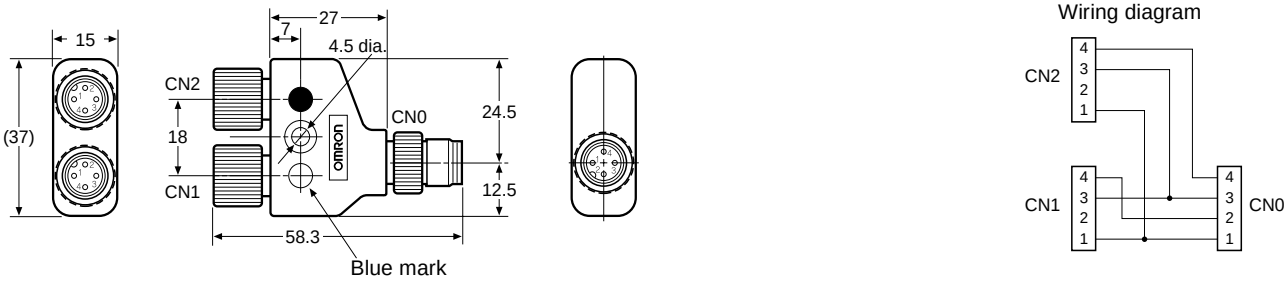

Tighten the connector by hand to a torque of 0.39 to 0.49 N·m. If the connector is not tightened sufficiently, it will not provide the expected environmental resistance and may come loose from vibration. Do not use pliers or other tools to tighten the connectors, because the tools may damage the connectors.

Always cap unused connectors with an XS2Z-12 Waterproof Cover or XS2Z-15 Dust Cover, shown in the following diagram.

XS2Z-12 Waterproof Cover

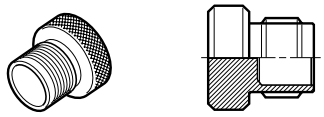

The connector will meet IP66 standards if a Waterproof Cover is attached. Tighten the connector by hand to a torque of 0.39 to 0.49 N·m.

XS2Z-15 Dust Cover

Press the Dust Cover onto the connector firmly. The Dust Cover will protect the connector from dust, but does not meet IP66 standards.

Maintaining Environmental Resistance

- The IP66 environmental resistance level will be lost if the surfaces where the contact block and cover meet are subjected to excessive force. Protect the contact block and cover from excessive force or shock.
- The IP66 standard is lower than waterproof standards. Do not submerge the system components.
- The body of the components is plastic resin. Do not place objects on the components or allow the components to be stepped on.

There are two kinds of wiring for OMRON 2-wire Proximity Switches (prewired with connector). One kind has IEC pin allocation (M1GJ type) and the other has OMRON pin allocation (M1J type). Refer to the following table to determine the appropriate Environment-resistive Terminal to use with each kind of switch.

Proximity Switch	Compatible Terminals
IEC pin allocation (M1GJ type)	DRT1-HD16C-1 DRT1-MD16C-1
OMRON pin allocation (M1J type)	DRT1-ID08C DRT1-HD16C DRT1-MD16C

5-4 Waterproof Terminals (IP67)

5-4-1 Node Address, Baud Rate, and Output Hold/Clear Settings

This section describes the node address setting, baud rate setting, and the hold/clear outputs for communications error setting. These settings are common to all of the Waterproof Terminals and are made on the shown in the following diagrams.

Node address setting: Rotary switches
Baud rate setting: Pins 1 and 2
Output hold/clear setting: Pin 4 (affects only outputs)

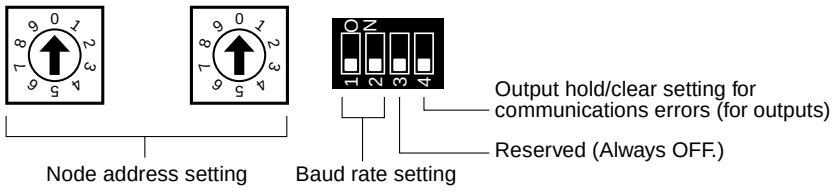

Node Address Setting

Each Waterproof Terminal's node address is set in two-digit decimal with the rotary switches. The 10's digit is set on the left rotary switch and the 1's digit is set on right rotary switch.

Any node address within the allowed setting range can be used as long as it isn't already set on another node.

The Waterproof Terminal won't be able to participate in communications if the same node address is used for the Master or another Slave node (node address duplication error).

Note The Slave won't be able to participate in communications if the same node address is used for the Master or another Slave node (node address duplication error).

Baud Rate Setting

Pins 1 and 2 are used to set the baud rate as shown in the following table. (These pins are factory-set to OFF.)

Pin settings		Baud rate
Pin 1	Pin 2	
OFF	OFF	125 kbps (default)
ON	OFF	250 kbps
OFF	ON	500 kbps
ON	ON	Not allowed.

Note

1. Always turn OFF the Slave's power supply (including the communications power supply) before changing the baud rate setting.
2. Set the same baud rate on all of the nodes (Master and Slaves) in the Network. Any Slaves with baud rates different from the Master's rate won't be able to participate in communications. Furthermore, a node with an incorrect baud rate setting may cause communications errors between nodes with correct baud rate settings.

Output Hold/Clear Setting

The functions of pins 3 and 4 differ for inputs and outputs, as shown in the following diagram. (Pins 3 and 4 are factory-set to OFF.)

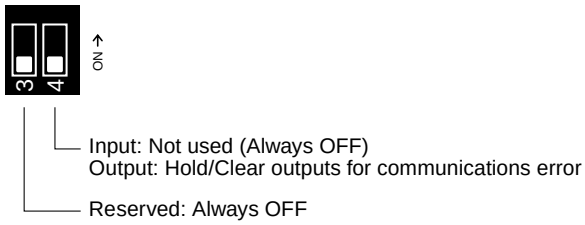

Pin 3: Reserved (Always OFF)

Pin 4: As follows:

Inputs: No function (Always OFF)
Outputs: Hold/Clear outputs for communications error
OFF (Clear): All output data from the Master will be cleared to 0 when a communications error occurs.
ON (Hold): All output data from the Master will be retained when a communications error occurs.

5-4-2 Waterproof Terminal (IP67) with 4 Transistor Inputs: DRT1-ID04CL (NPN) and DRT1-ID04CL-1 (PNP)

Input Specifications

Item	Specification	
Model	DRT1-ID04CL	DRT1-ID04CL-1
Internal I/O common	NPN	PNP
Input points	4 points (Uses one word in Master.)	
ON voltage	15 V DC min. (between each input terminal and V)	15 V DC min. (between each input terminal and G)
OFF voltage	5 V DC max. (between each input terminal and V)	5 V DC max. (between each input terminal and G)
OFF current	1 mA max.	
Input current	6 mA max./point at 24 V DC 3 mA max./point at 17 V DC (between each input terminal and V)	6 mA max./point at 24 V DC 3 mA max./point at 17 V DC (between each input terminal and G)
ON delay time	1.5 ms max.	
OFF delay time	1.5 ms max.	
Number of circuits	4 points with one common	

Components of the DRT1-ID04CL and DRT1-ID04CL-1

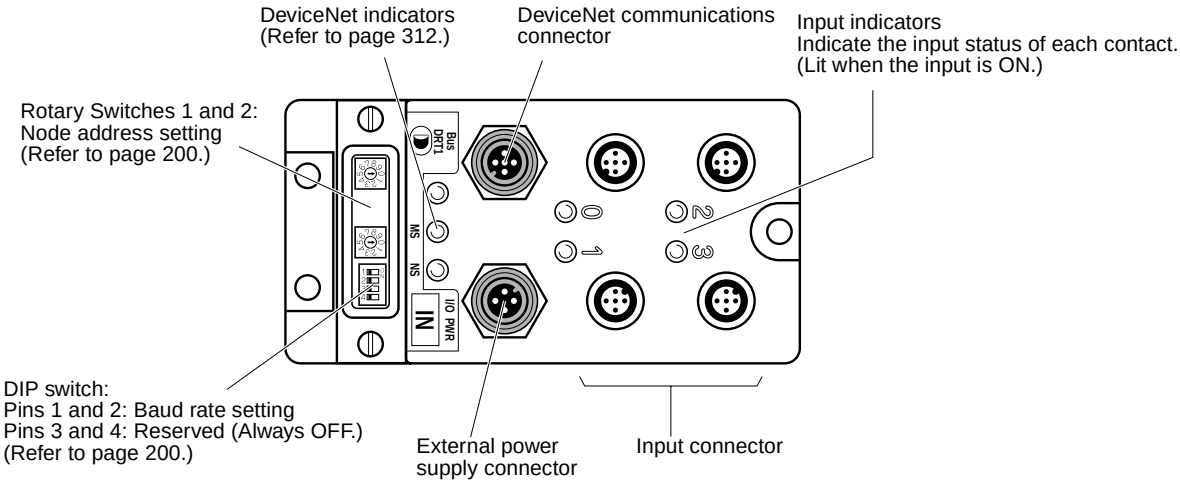

Internal Circuits

The following diagram shows the internal circuits for the DRT1-ID04CL Waterproof Terminal (NPN).

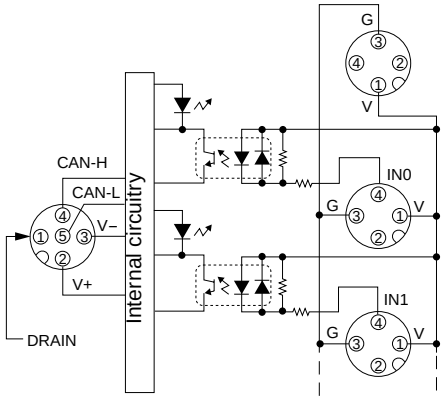

The following diagram shows the internal circuits for the DRT1-ID04CL-1 Waterproof Terminal (PNP).

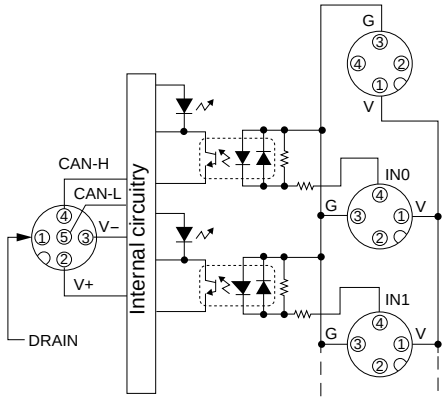

Wiring

The following diagram shows the wiring of the DRT1-ID04CL Waterproof Terminal (NPN).

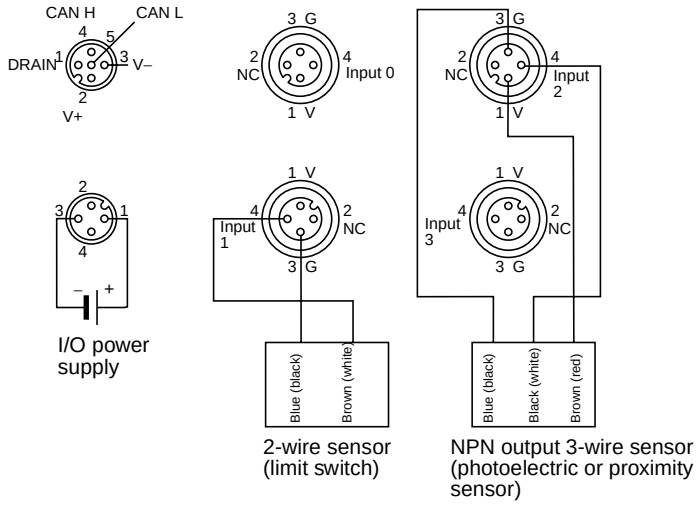

The following diagram shows the wiring of the DRT1-ID04CL-1 Waterproof Terminal (PNP).

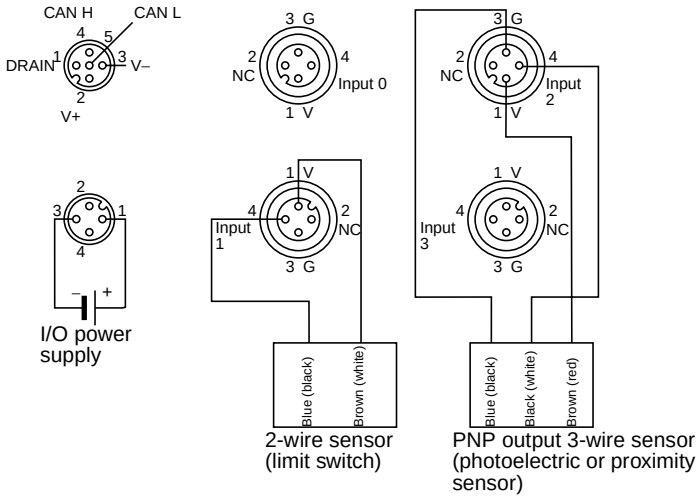

Note 1. External power supply line 0V and input line G are connected internally, as are external power supply line 24V and input line V. When input power is

supplied to external power supply connectors, power can be supplied to sensors from input lines G and V provided that the total current does not exceed 1.0 A. If the total current exceeds 1.0 A, the power must not be supplied from the connector; it must be supplied externally instead.

2. Wire colors in parentheses are the previous JIS colors for photoelectric and proximity sensors.

Dimensions

The following diagram shows the dimensions for the DRT1-ID04CL and DRT1-ID04CL-1 Waterproof Terminals. All dimensions are in mm.

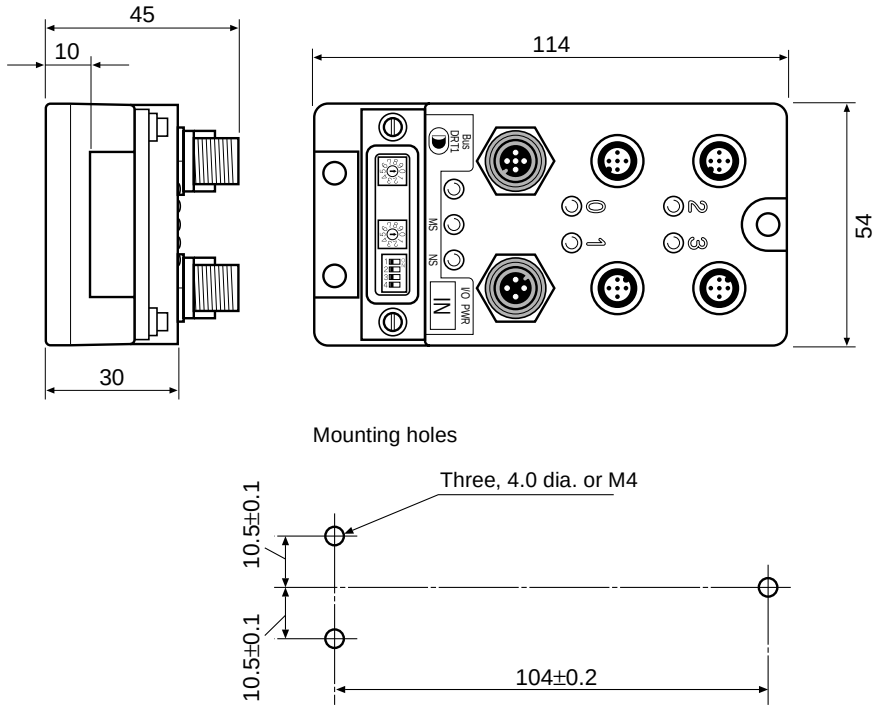

5-4-3 Waterproof Terminal (IP67) with 8 Transistor Inputs: DRT1-ID08CL (NPN) and DRT1-ID08CL-1 (PNP)

Input Specifications

Item	Specification	
Model	DRT1-ID08CL	DRT1-ID08CL-1
Internal I/O common	NPN	PNP
Input points	8 points (Uses one word in Master.)	
ON voltage	15 V DC min. (between each input terminal and V)	15 V DC min. (between each input terminal and G)
OFF voltage	5 V DC max. (between each input terminal and V)	5 V DC max. (between each input terminal and G)
OFF current	1 mA max.	
Input current	6 mA max./point at 24 V DC 3 mA max./point at 17 V DC (between each input terminal and V)	6 mA max./point at 24 V DC 3 mA max./point at 17 V DC (between each input terminal and G)
ON delay time	1.5 ms max.	
OFF delay time	1.5 ms max.	
Number of circuits	8 points with one common	

Components of the DRT1-ID08CL and DRT1-ID08CL-1

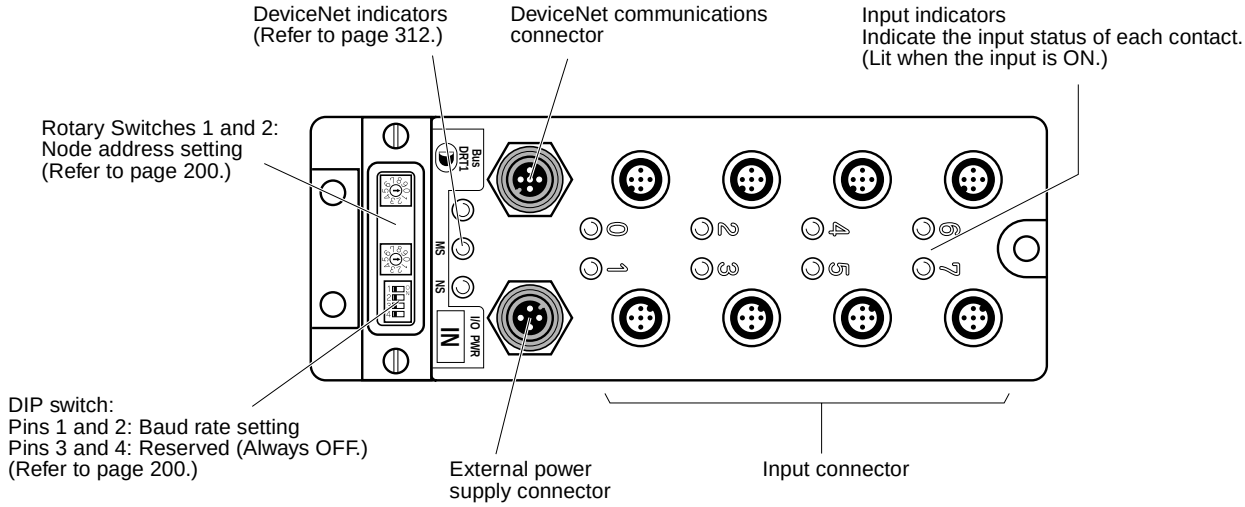

Internal Circuits

The following diagram shows the internal circuits for the DRT1-ID08CL Waterproof Terminal (NPN).

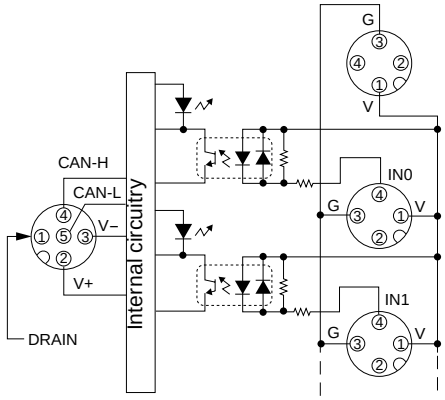

The following diagram shows the internal circuits for the DRT1-ID08CL-1 Waterproof Terminal (PNP).

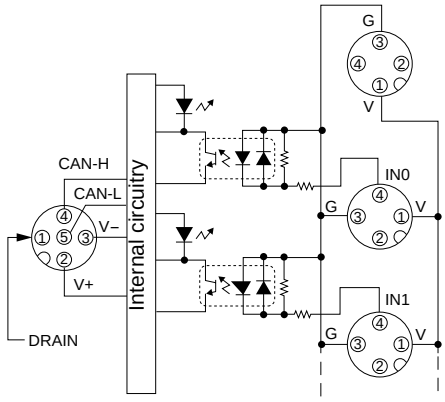

Wiring

The following diagram shows the wiring of the DRT1-ID08CL Waterproof Terminal (NPN).

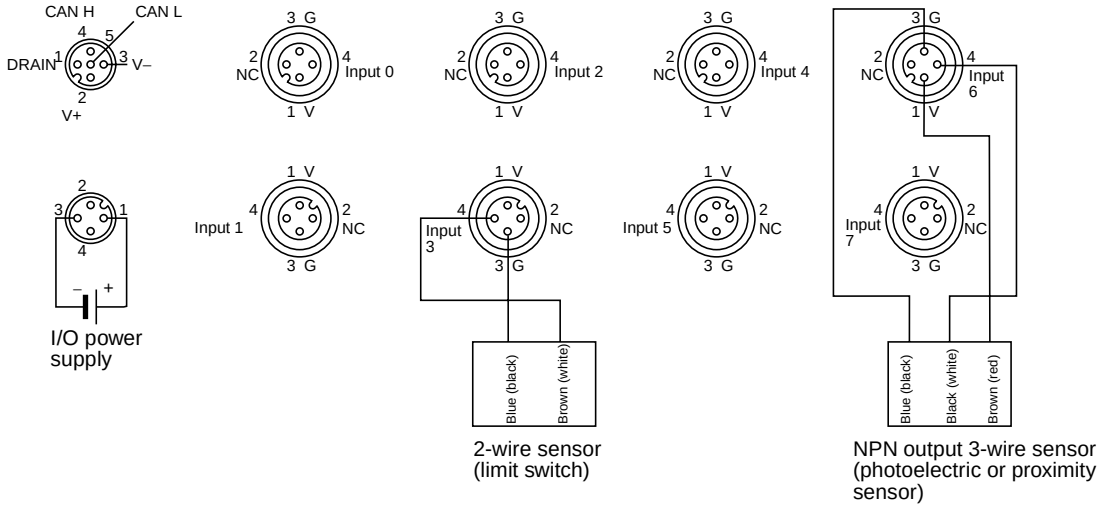

The following diagram shows the wiring of the DRT1-ID08CL-1 Waterproof Terminal (PNP).

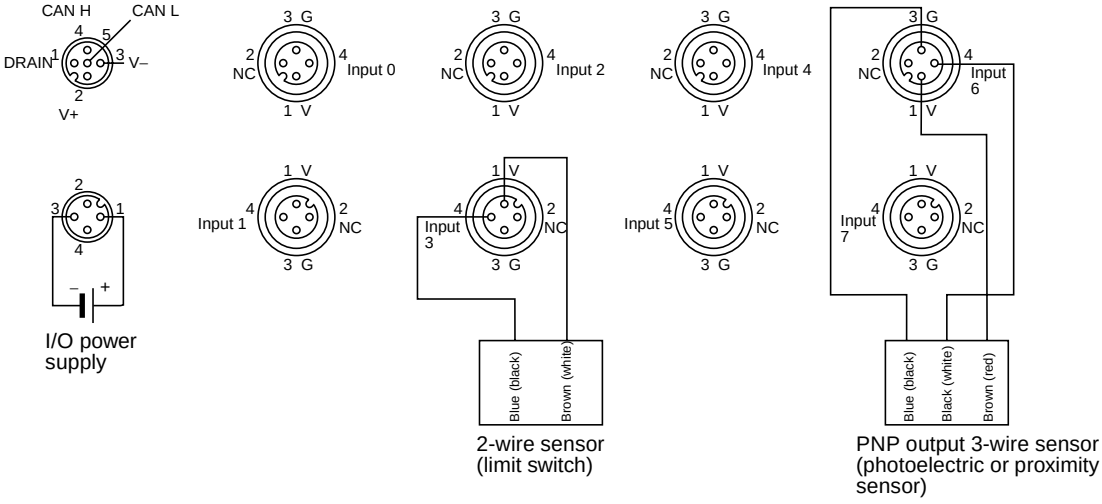

Note

1. External power supply line 0V and input line G are connected internally, as are external power supply line 24V and input line V. When input power is supplied to external power supply connectors, power can be supplied to sensors from input lines G and V provided that the total current does not exceed 1.0 A. If the total current exceeds 1.0 A, the power must not be supplied from the connector; it must be supplied externally instead.
2. Wire colors in parentheses are the previous JIS colors for photoelectric and proximity sensors.

Dimensions

The following diagram shows the dimensions for the DRT1-ID08CL and DRT1-ID08CL-1 Waterproof Terminals. All dimensions are in mm.

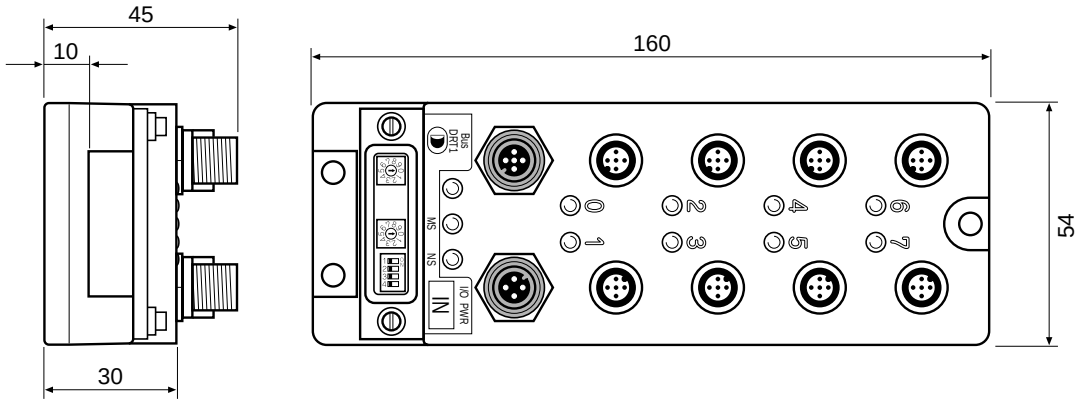

Mounting holes

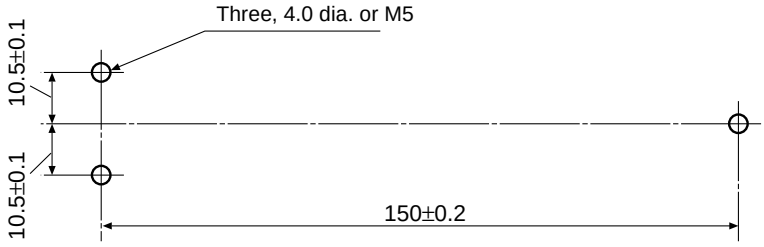

5-4-4 Waterproof Terminal (IP67) with 4 Transistor Outputs: DRT1-OD04CL (NPN) and DRT1-OD04CL-1 (PNP)

Output Specifications

Item	Specification	
Model	DRT1-OD04CL	DRT1-OD04CL-1
Internal I/O common	NPN	PNP
Output points	4 points (Uses one word in Master.)	
Rated output current	0.5 A/point, 2.0 A/common	
Residual voltage	1.2 V max. (at 0.5 A, between each output terminal and G)	1.2 V max. (at 0.5 A, between each output terminal and V)
Leakage current	0.1 mA max.	
ON delay time	0.5 ms max.	
OFF delay time	1.5 ms max.	
Number of circuits	4 points with one common	

Components of the DRT1-OD04CL and DRT1-OD04CL-1

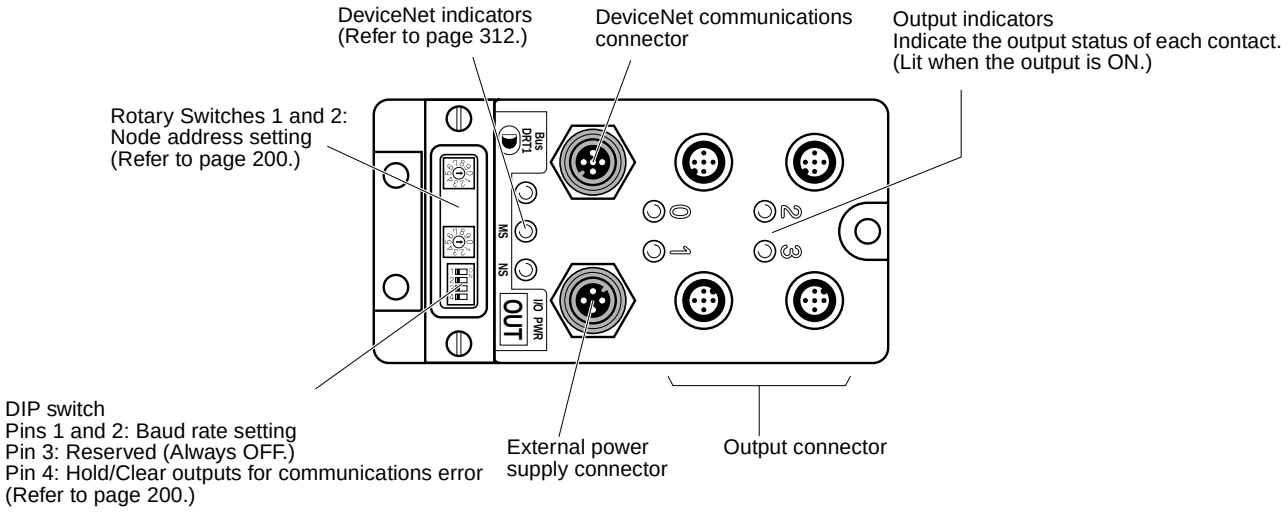

Internal Circuits

The following diagram shows the internal circuits for the DRT1-OD04CL Waterproof Terminal (NPN).

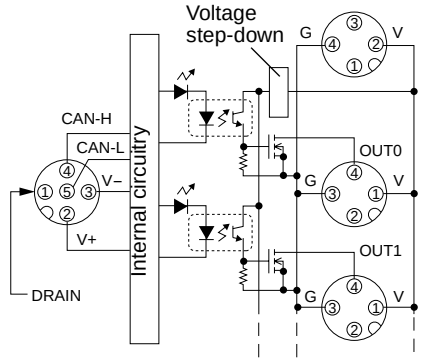

The following diagram shows the internal circuits for the DRT1-OD04CL-1 Waterproof Terminal (PNP).

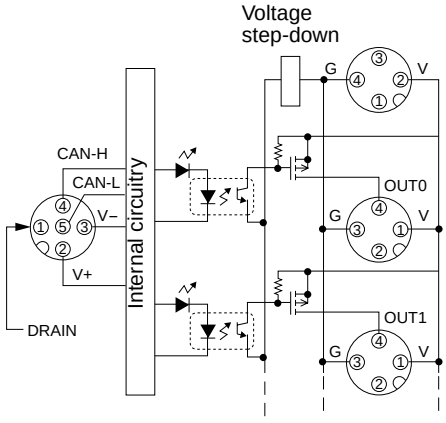

Wiring

The following diagram shows the wiring of the DRT1-OD04CL Waterproof Terminal (NPN).

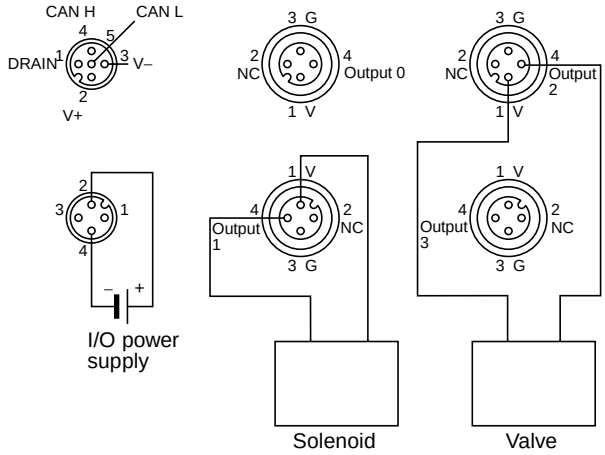

The following diagram shows the wiring of the DRT1-OD04CL-1 Waterproof Terminal (PNP).

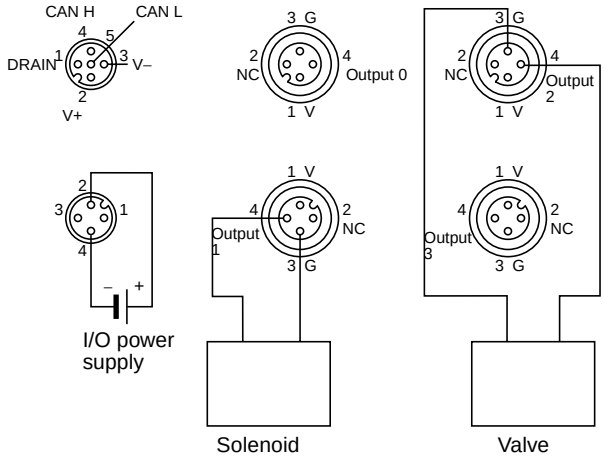

Note External power supply line 0V and output line G are connected internally, as are external power supply line 24V and output line V. When output power is supplied to external power supply connectors, power can be supplied to output devices from output lines G and V provided that the total current does not exceed 2.0 A. If the total current exceeds 2.0 A, the power must not be supplied from the connector; it must be supplied externally instead.

Dimensions

The following diagram shows the dimensions for the DRT1-OD04CL and DRT1-OD04CL-1 Waterproof Terminals. All dimensions are in mm.

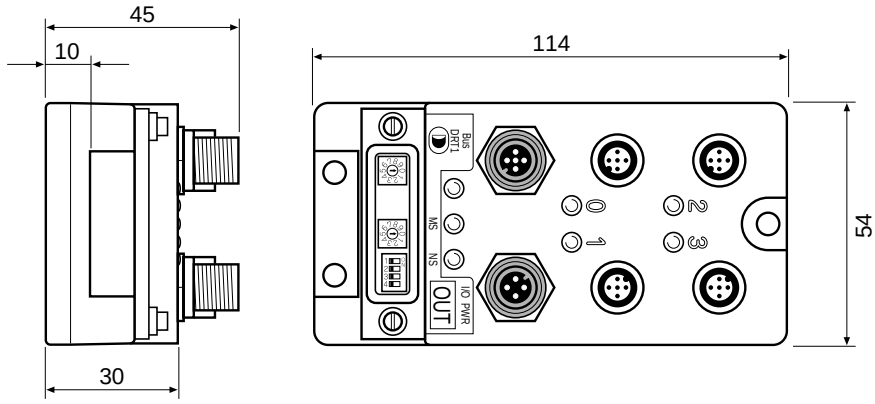

Mounting holes

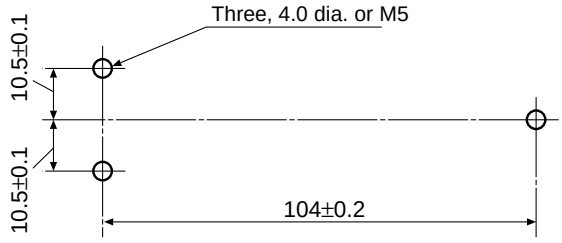

5-4-5 Waterproof Terminal (IP67) with 8 Transistor Outputs: DRT1-OD08CL (NPN) and DRT1-OD08CL-1 (PNP)

Output Specifications

Item	Specification	
Model	DRT1-OD08CL	DRT1-OD08CL-1
Internal I/O common	NPN	PNP
Output points	8 points (Uses one word in Master.)	
Rated output current	0.5 A/point, 2.4 A/common	
Residual voltage	1.2 V max. (at 0.5 A, between each output terminal and G)	1.2 V max. (at 0.5 A, between each output terminal and V)
Leakage current	0.1 mA max.	
ON delay time	0.5 ms max.	
OFF delay time	1.5 ms max.	
Number of circuits	8 points with one common	

Components of the DRT1-OD08CL and DRT1-OD08CL-1

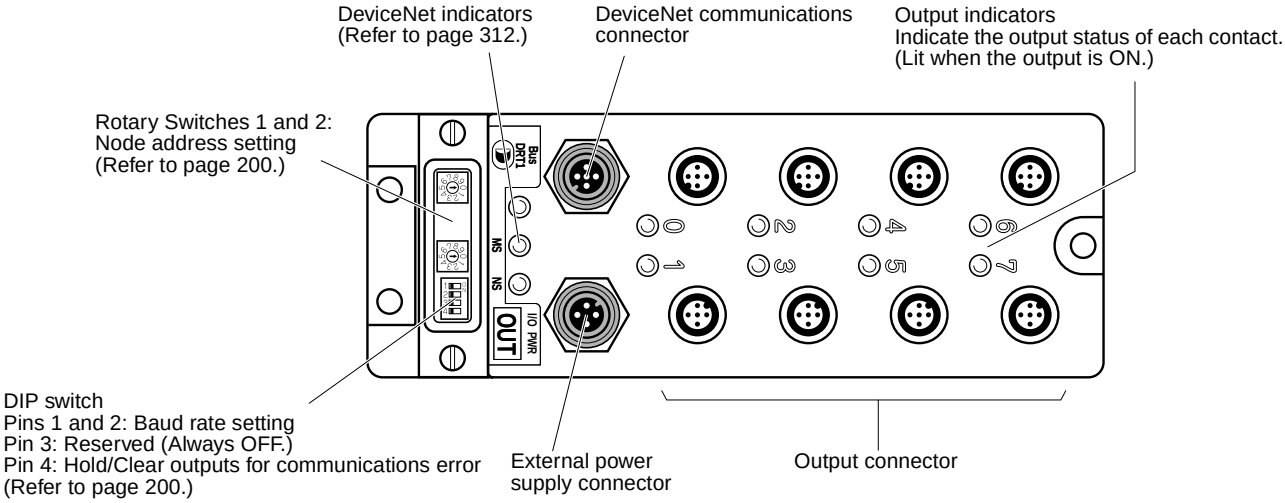

Internal Circuits

The following diagram shows the internal circuits for the DRT1-OD08CL Waterproof Terminal (NPN).

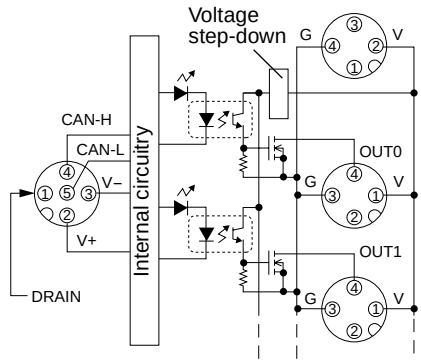

The following diagram shows the internal circuits for the DRT1-OD08CL-1 Waterproof Terminal (PNP).

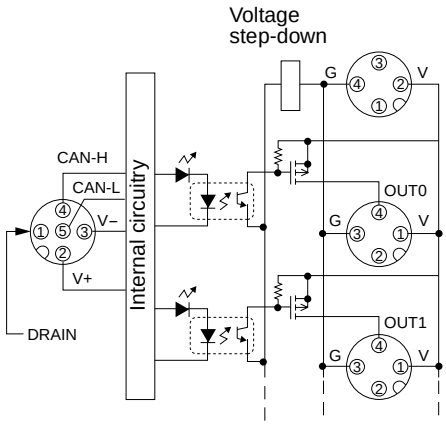

Wiring

The following diagram shows the wiring of the DRT1-OD08CL Waterproof Terminal (NPN).

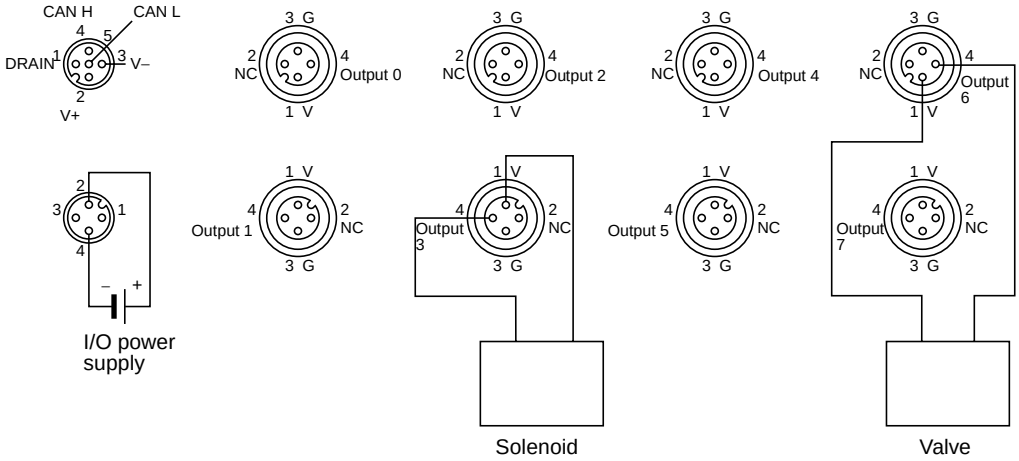

The following diagram shows the wiring of the DRT1-OD08CL-1 Waterproof Terminal (PNP).

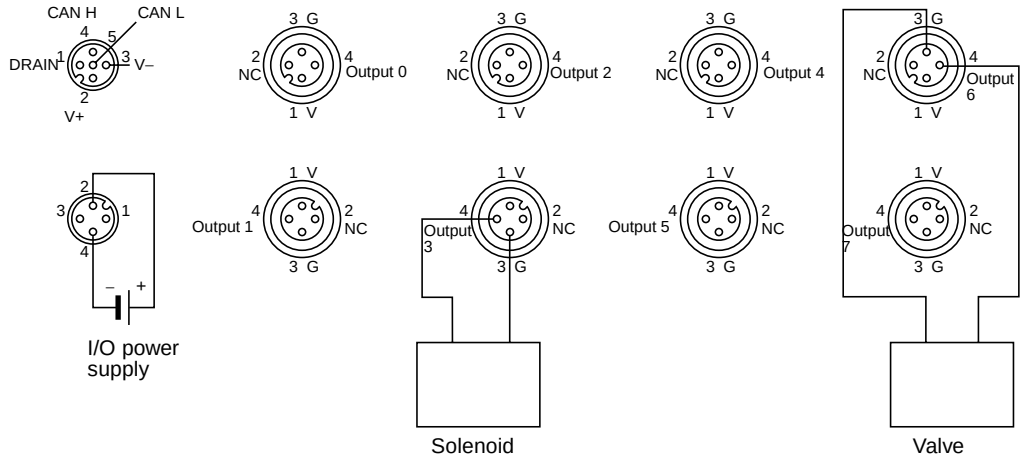

Note External power supply line 0V and output line G are connected internally, as are external power supply line 24V and output line V. When output power is supplied to external power supply connectors, power can be supplied to output devices from output lines G and V provided that the total current does not exceed 2.4 A. If the total current exceeds 2.4 A, the power must not be supplied from the connector; it must be supplied externally instead.

Dimensions

The following diagram shows the dimensions for the DRT1-OD08CL and DRT1-OD08CL-1 Waterproof Terminals. All dimensions are in mm.

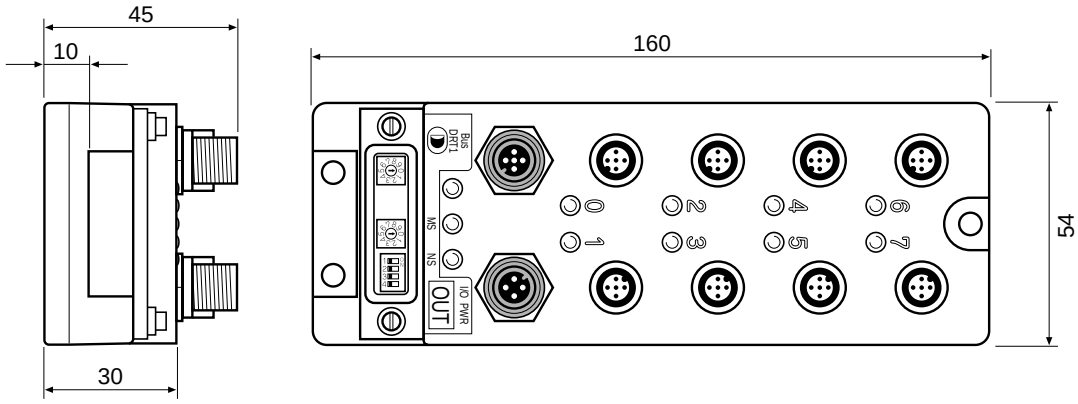

Mounting holes

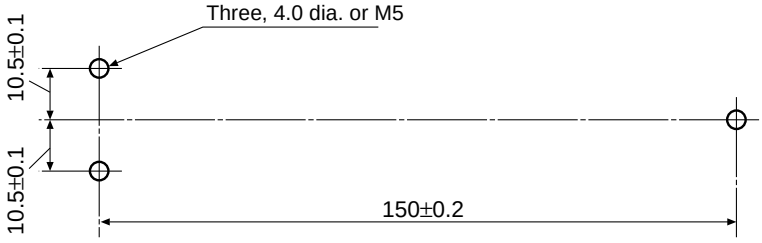

5-4-6 Mounting in Control Panels

Use screws to mount a Waterproof Terminal in a control panel. These Terminals cannot be mounted on a DIN Track.

Drill the mounting holes in the control panel according to the dimensions shown in the dimensions diagrams and secure the Terminal with M5 screws. The appropriate tightening torque is 1.47 to 1.96 N·m.

Installation Direction

The Terminal can be mounted in any direction. Any one of the following 6 directions is acceptable.

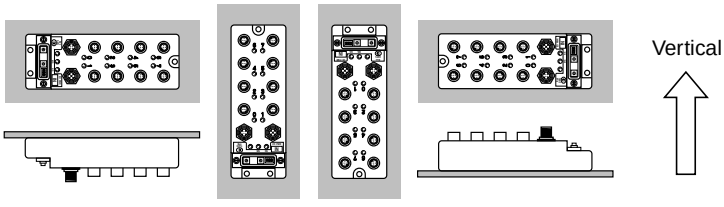

5-4-7 Wiring Internal Power Supplies, I/O Power Supplies, and I/O Lines

Wiring the Internal Power Supply and I/O Power Supply

The internal power supply shares the communications power supply, so it isn't necessary to connect a separate internal power supply.

To provide the I/O power supply, connect the external power supply to the Terminal with an XS2-series Round Waterproof Connector listed in the following table.

Compatible Connectors

Connector	Model
Cable with connectors on both ends (socket and plug)	XS2W-D42□-□81-□
Cable with connector on one end (female socket)	XS2F-D42□-□80-□
Connector socket assembly (female) (Crimp-connector or solder type)	XS2C-D4□□
T-joint	CS2R-D427-5

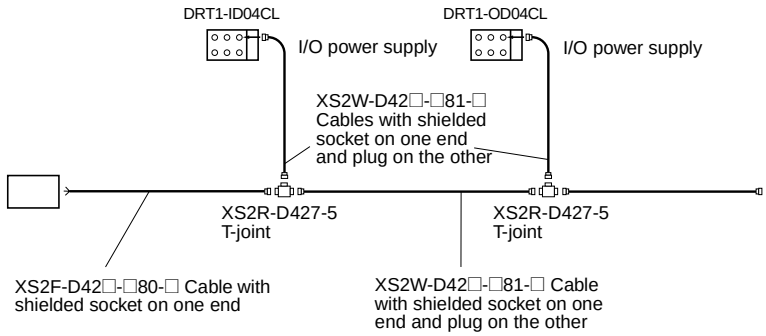

Note

1. Tighten the connector by hand to a torque of 0.39 to 0.49 N·m. If the connector is not tightened sufficiently, it will not provide the expected environmental resistance and may come loose from vibration. Do not use pliers or other tools to tighten the connectors, because the tools may damage the connectors.
2. The same I/O power supply can be used for both input and output devices, but the noise from the output devices may cause the input devices to malfunction. Use separate power supplies if possible.

I/O Wiring

Connect the I/O Wiring to the Environment-resistive Terminal with the XS2-series Round Waterproof Connectors listed in the following table.

Compatible Connectors

Connector	Model number
Cable with connector on one end (male plug)	XS2H-D421-□80-A
Cable with connectors on both ends (socket and plug)	XS2W-D42□-□81-A
Connector plug assembly (male) (Crimp-connector or solder type)	XS2G-D4□□

Sensors that are pre-wired with a connector can be connected directly.

Refer to the Catalog or manual for details on the device's connections before connecting any device.

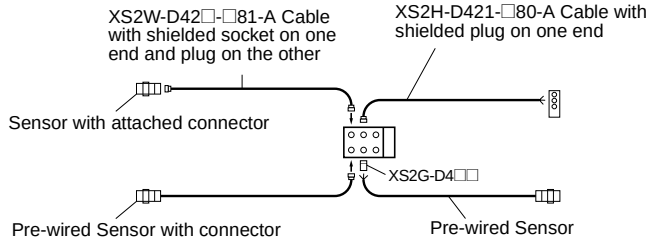

Note

1. Refer to the *OMRON Sensors Catalog (X42-E1-3)* for more details on the sensor connections and Round Waterproof Connectors.
2. Tighten the connector by hand to a torque of 0.39 to 0.49 N·m. If the connector is not tightened sufficiently, it will not provide the expected environ-

mental resistance and may come loose from vibration. Do not use pliers or other tools to tighten the connectors, because the tools may damage the connectors.

3. Always cap unused connectors with an XS2Z-12 Waterproof Cover or XS2Z-15 Dust Cover, shown in the following diagram.

XS2Z-12 Waterproof Cover

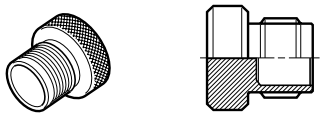

The connector will meet IP67 standards if a Waterproof Cover is attached. Tighten the connector by hand to a torque of 0.39 to 0.49 N·m.

XS2Z-15 Dust Cover

Press the Dust Cover onto the connector firmly. The Dust Cover will protect the connector from dust, but does not meet IP67 standards.

Maintaining Environmental Resistance

- The IP67 environmental resistance level will be lost if the surfaces where the contact block and cover meet are subjected to excessive force. Protect the contact block and cover from excessive force or shock.
- The IP67 standard is not completely waterproof. Do not submerge the system components.
- The body of the components is plastic resin. Do not place objects on the components or allow the components to be stepped on.

Note There are two kinds of wiring for OMRON 2-wire Proximity Switches (pre-wired with connector). One kind has IEC pin allocation (M1GJ type) and the other has OMRON pin allocation (M1J type). Refer to the following table to determine the appropriate Waterproof Terminal to use with each kind of switch.

Proximity Switch	Compatible Terminal
IEC pin allocation (M1GJ type)	DRT1-ID04CL-1 DRT1-ID08CL-1
OMRON pin allocation (M1J type)	DRT1-ID04CL DRT1-ID08CL

5-5 B7AC Interface Units

The B7AC Interface Unit acts as an interface between I/O Connector-type B7AC Link Terminal Units and the DeviceNet Master Unit. Up to 3 B7AC Link Terminal Units (3 Units × 10 inputs/Unit) can be connected to the B7AC Interface Unit.

The B7AC Interface Unit uses shielded connectors to connect to both the DeviceNet Master Unit and B7AC Link Terminal Units, so the cable connections can be made easily without tools and the connections meet the high IP66 environmental resistance standards.

5-5-1 Node Address and Baud Rate Settings (DIP Switch 1)

This section explains the B7AC Interface Unit's node address and baud rate settings. These settings are made using the following pins on DIP switch 1.

Node address setting: DIP switch 1, pins 1 through 6
Baud rate setting: DIP switch 1, pins 7 and 8

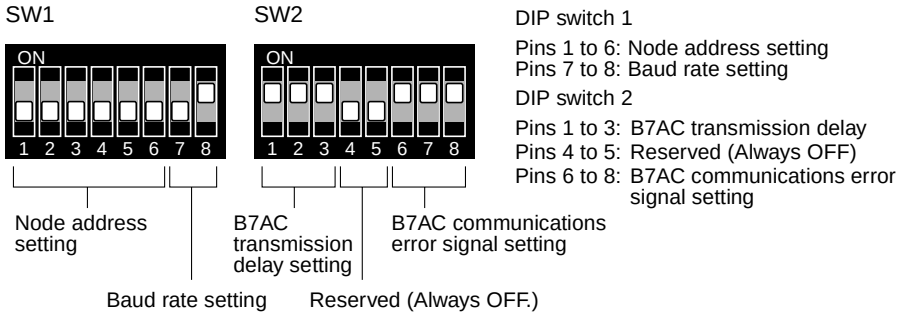

The settings on DIP switch 2 are communications settings for the individual B7AC Interface Unit. Refer to *Settings on DIP Switch 2* on page 219 for details on these settings.

Node Address Settings

The B7AC Interface Unit's node address is set with pins 1 through 6 of DIP switch 1. Any node address within the setting range can be used as long as it isn't already set on another node.

DIP switch setting						Node address
Pin 6	Pin 5	Pin 4	Pin 3	Pin 2	Pin 1	
0	0	0	0	0	0	0 (default)
0	0	0	0	0	1	1
0	0	0	0	1	0	2
⋮						⋮
1	1	1	1	0	1	61
1	1	1	1	1	0	62
1	1	1	1	1	1	63

0: OFF, 1: ON

Note

1. Refer to *Appendix A Node Address Settings Table* for a complete table of DIP switch settings.
2. The Slave won't be able to participate in communications if the same node address is used for the Master or another Slave node (node address duplication error).

Baud Rate Setting

Pins 7 and 8 of DIP switch 1 are used to set the baud rate as shown in the following table. (These pins are factory-set to OFF.)

Pin Settings		Baud rate
Pin 7	Pin 8	
OFF	OFF	125 kbps
ON	OFF	250 kbps
OFF	ON	500 kbps (default)
ON	ON	Not allowed.

Note

1. Always turn OFF the Slave's power supply (including the communications power supply) before changing the baud rate setting.
2. Set the same baud rate on all of the nodes (Master and Slaves) in the Network. Any Slaves with baud rates different from the Master's rate won't be able to participate in communications. Furthermore, a node with an incorrect baud rate setting may cause communications errors between nodes with correct baud rate settings.

5-5-2 Example System Configuration

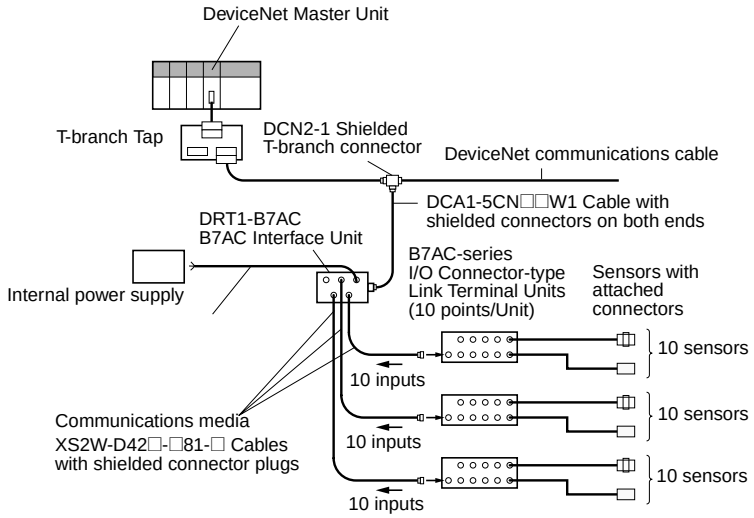

Compatible B7AC Link Terminal Units

The following B7AC Link Terminal Units (Sensor I/O Connector type) can be connected to the B7AC Interface Unit.

Model	Number of inputs	Input format	Transmission delay with the B7AC Interface Unit
B7AC-T10A1	10 inputs	NPN	19.2 ms
B7AC-T10A1-A	10 inputs	NPN	19.2 ms or 3 ms (switchable)
B7AC-T10A1-B	10 inputs	PNP	19.2 ms or 3 ms (switchable)

5-5-3 B7AC Interface Unit: DRT1-B7AC

Specifications

General Specifications

Item	Specification
Model	DRT1-B7AC
Number of I/O points	30 B7AC inputs max. (up to 3 B7AC Link Terminal Units can be connected with 10 inputs/Unit) Uses two input words in Master.
Internal current consumption	24-V DC communications power supply: 70 mA max. 24-V DC internal power supply: 500 mA max. (This is the current when 3 B7AC Link Terminal Units are connected and all inputs are OFF. It does not include the current consumed by connected external devices.)
Dielectric strength	500 V AC for 1 min. (between insulated circuits, detected leakage current 1 mA)
Noise immunity	Internal power supply normal: ±600 V, 10 min., with pulse widths of 100 ns to 1 μs Internal power supply common: ±1.5 kV, 10 min., with pulse widths of 100 ns to 1 μs
Vibration resistance	Malfunction: 10 to 150 kHz, single amplitude 0.5 mm, or 70 m/s^2 Destruction: 10 to 150 kHz, single amplitude 0.75 mm, or 100 m/s^2
Shock resistance	Malfunction: 200 m/s^2 Destruction: 300 m/s^2
Ambient operating temperature	–10 to 55°C

Item	Specification
Ambient operating humidity	25% to 85% (with no condensation)
Degree of protection	IP66
Mounting method	M5 screws
Mounting strength	100 N for 10 s
Communications connector strength	100 N pull for 10 s
Weight	Approx. 500 g max.

Communications Specifications (with B7AC-series Units)

Item	Specification
Number of ports	3 ports for communications with B7AC Link Terminal Units (Round shielded connectors)
Number of I/O points	30 inputs (10 inputs/port × 3 ports)
Communications method	Split multiplex transmission in one direction
Transmission delay	Standard: 19.2 ms typical (31 ms max.) High-speed: 3 ms typical (5 ms max.)
Communications path	0.5 mm VCTF cable, 1 A current max. on +/– lines
Communications distance	With standard transmission delay: 50 m max. With high-speed transmission delay: 30 m max.

Components of the DRT1-B7AC

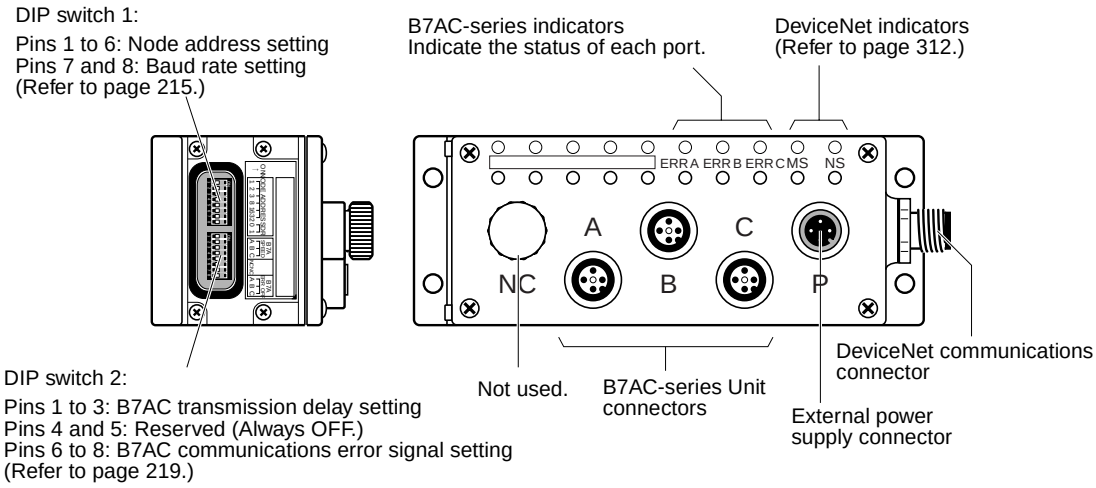

LED Indicators

Usage	Name	Status	Color	Meaning
DeviceNet indicators	MS	Lit	Green	Normal status
		Flashing		Settings not made.
		Lit	Red	Fatal error
		Flashing		Non-fatal error
		Not lit	---	Power is not being supplied.
	NS	Lit	Green	Normal status
		Flashing		Communications not established (negotiating with Master)
		Lit	Red	Fatal communications error (such as a node address duplication error)
		Flashing		Non-fatal communications error
		Not lit	---	Power is not being supplied.
B7AC-series indicators	ERR A ERR B ERR C (for ports A, B, and C)	Lit	Green	Normal status
		Lit	Red	Communications error
		Lit	Orange	A communications error occurred but the error was resolved later. (See note 1.)
		Not lit	---	Power is not being supplied. A B7AC Link Terminal Unit was not connected when the power was turned ON. (See note 2.)

Note

1. The indicator can be restored to green by resetting the power (turning the power OFF and then ON again.)
2. The indicator will become green or orange if a B7AC-series Unit is connected after the power was turned ON.
   Depending on the B7AC communications timing at startup, a momentary communications error may occur and cause the indicator to become orange after the error is resolved. It the indicator is orange, it can be restored to green by resetting the power (turning the power OFF and then ON again.)

Settings on DIP Switch 2

The settings on DIP switch 2 are B7AC communications settings for the individual B7AC Interface Unit.

For details on the DIP switch 1 settings, refer to *5-5-1 Node Address and Baud Rate Settings (DIP Switch 1)*.

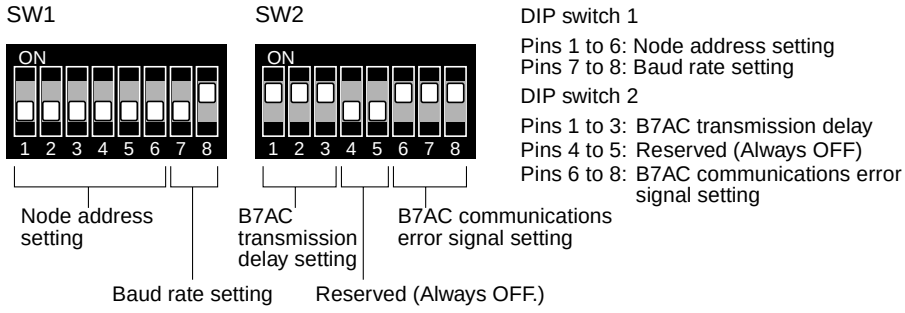

B7AC Transmission Delay Setting (Pins 1 to 3)

Pins 1 to 3 set the transmission delay time for communications with the B7AC Link Terminal Unit at each port, as shown in the following table. These pins are set to ON (high-speed) at the factory.

Pin 1	Pin 2	Pin 3	Transmission delay time
Port A	Port B	Port C	
OFF	OFF	OFF	19.2 ms typical
ON	ON	ON	3 ms typical (factory setting)

B7AC Communications Error Signal Setting

Pins 6 to 8 specify whether an error signal (notification) will be sent to the Master Unit when an error occurs in B7AC communications through the corresponding port. These pins are set to ON (send error signal) at the factory

Pin 6	Pin 7	Pin 8	B7AC communications error signal setting
Port A	Port B	Port C	
OFF	OFF	OFF	Do not send error signal.
ON	ON	ON	Send error signal. (factory setting)

If an error occurs in a port and the corresponding pin is ON (send error signal), the B7AC Communications Error Flag will be turned ON in the words allocated in the Master Unit. See *I/O Allocation* below for details on the location of the B7AC Communications Error Flag.

Note

1. Always turn OFF the Unit's power supply (including the communications power supply) before changing any DIP switch settings.
2. Set the appropriate transmission delay time for the B7AC Link Terminal Unit connected to each port.
3. Always turn OFF the B7AC communications error signal setting for a port if there isn't a B7AC Link Terminal Unit connected to the port.

I/O Allocation

The B7AC Interface Unit is allocated two input words in the Master Unit. The following table shows the usage of these two words when word "m+0" is the first word allocated and "m+1" is the second word allocated.

Port on B7AC Interface Unit	Connector on B7AC Link Terminal Unit	I/O bits allocated to Master Unit
Port A	Input connector 0 to 9	Word m+0, bits 00 to 09
Port B	Input connector 0 to 5	Word m+0, bits 10 to 15
	Input connector 6 to 9	Word m+1, bits 00 to 03
Port C	Input connector 0 to 9	Word m+1, bits 04 to 13

Bit:	15	14	13	12	11	10	9	8	7	6	5	4	3	2	1	0
Wd m+0	Inputs for B7AC Unit connected to port B						Inputs for B7AC Unit connected to port A									
	5	4	3	2	1	0	9	8	7	6	5	4	3	2	1	0
Wd m+1	Note 2	ERR Note 1	Inputs for B7AC Unit connected to port C										Inputs for B7AC Unit connected to port B			
			9	8	7	6	5	4	3	2	1	0	9	8	7	6

Note

1. Bit 14 of word m+1 is the B7AC Communications Error Flag for the B7AC Interface Unit. This flag will be turned ON if there is a communications error in any one of the ports set to "send error signal" in pins 6 to 8 of DIP switch 2. The flag will be reset to 0 automatically when the communications error is resolved.

2. This bit is always 0 (OFF).

I/O Allocation Example

When the Master Unit is mounted in a C200HX/HG/HE PLC and fixed allocation is used for DeviceNet, IR area words IR 350 through IR 399 are allocated to inputs from Slaves with node addresses 0 through 49.

If the B7AC Interface Unit's node address is set to 01, the first allocated word (m+0) will be IR 351. Ports A, B, and C will be allocated the following bits:

Port on B7AC Interface Unit	Connector on B7AC Link Terminal Unit	I/O bits allocated to Master Unit
Port A	Input connector 0 to 9	IR 35100 to IR 35109
Port B	Input connector 0 to 5	IR 35110 to IR 35115
	Input connector 6 to 9	IR 35200 to IR 35203
Port C	Input connector 0 to 9	IR 35204 to IR 35213

IR 35214 is the B7AC Communications Error Flag for the B7AC Interface Unit.

Note If a communications error occurs in communications with a B7AC Link Terminal Unit, normal communications will be restored automatically when the communications error is resolved. The time required to restore communications depends on the error continuation time (time from error occurrence to error resolution), as shown below.

- Error continuation time less than 500 ms:
  The B7AC Communications Error Flag will be turned OFF 500 ms after the error occurred.
- Error continuation time greater than 500 ms:
  The B7AC Communications Error Flag will be turned OFF after the error is resolved.

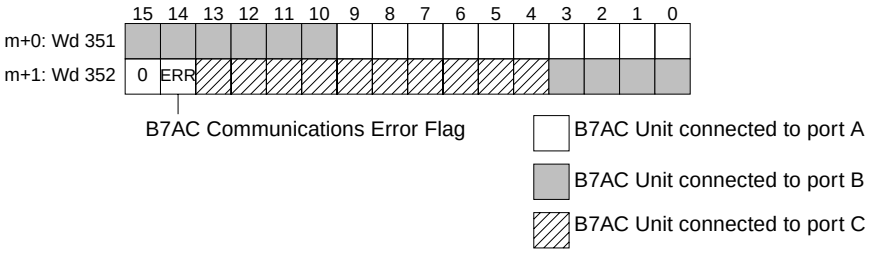

Internal Circuits

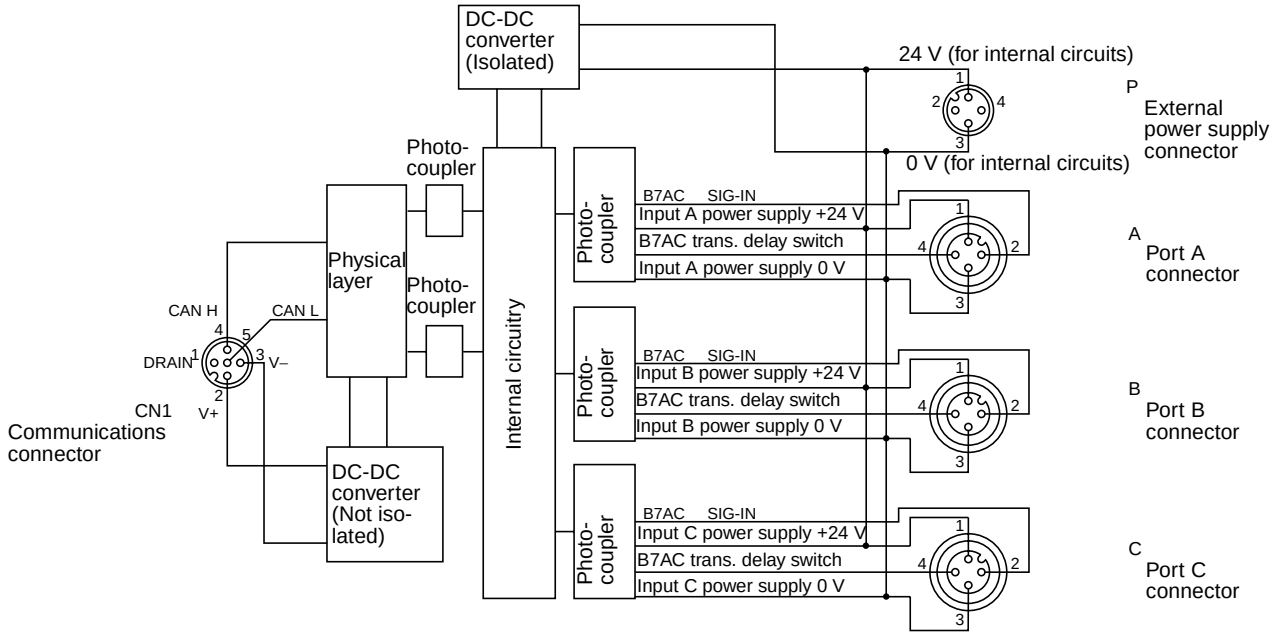

Dimensions

The following diagram shows the dimensions for the DRT1-B7AC Interface Unit. All dimensions are in mm.

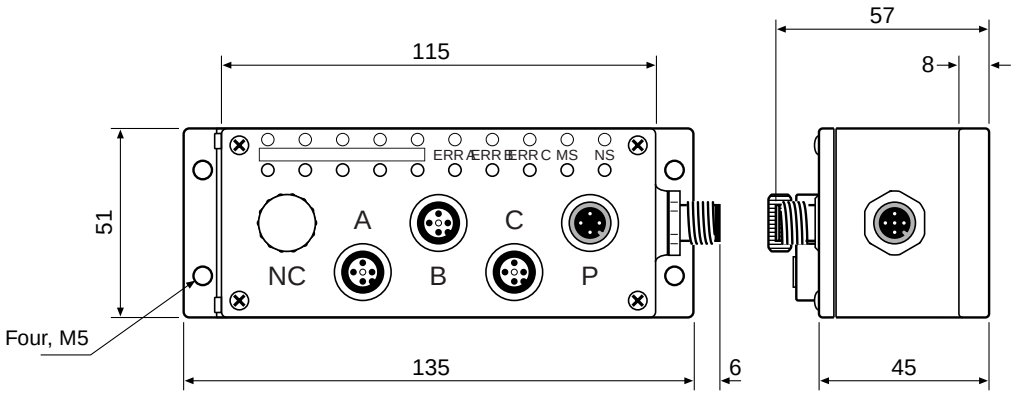

Mounting Holes

When mounting from the front with M4 screws and nuts

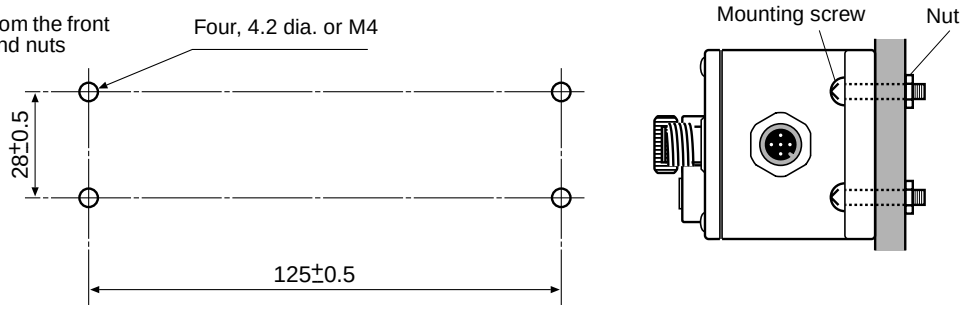

When mounting directly from the rear with M5 screws

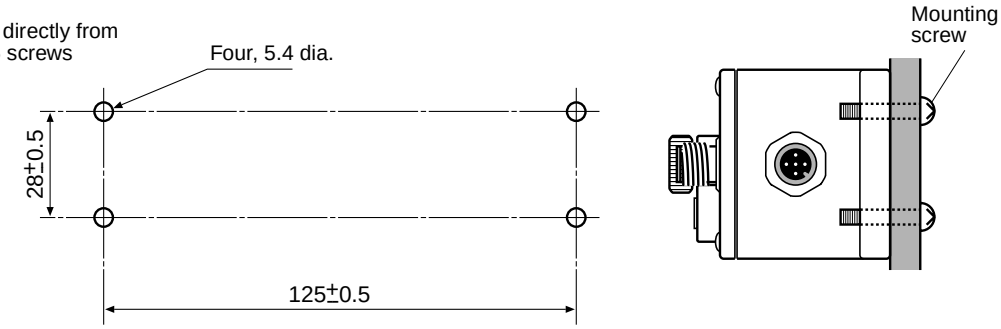

5-5-4 Mounting in Control Panels

Use screws to mount a B7AC Interface Unit in a control panel. These Units cannot be mounted on a DIN Track.

Attaching the Unit from the Front

The Units are tapped with M5 threads, so use M4 screws to clear the threads and attach the Unit to the control panel from the front. Drill the mounting holes in the control panel according to the dimensions shown in the dimensions diagrams and secure the Unit with M4 screws. The appropriate tightening torque is 0.6 to 1.18 N·m.

Attaching the Unit from the Rear

Drill the mounting holes in the control panel according to the dimensions shown in the dimensions diagram and secure the Unit with M5 screws. The appropriate tightening torque is 1.47 to 1.96 N·m.

Installation Direction

The Unit can be mounted in any direction. Any one of the following 6 directions is acceptable.

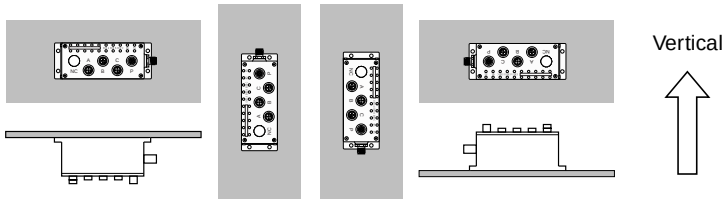

5-5-5 Wiring the Internal Power Supply and Input Lines

Wiring the Internal Power Supply

Connect the external power supply to the B7AC Interface Unit with an XS2-series Round Waterproof Connector listed in the following table.

Compatible Connectors

Connector	Model
Cable with connectors on both ends (socket and plug)	XS2W-D42□-□81-□
Cable with connector on one end (female socket)	XS2F-D42□-□80-□
Connector socket assembly (female) (Crimp-connector or solder type)	XS2C-D4□□
T-joint	CS2R-D427-5

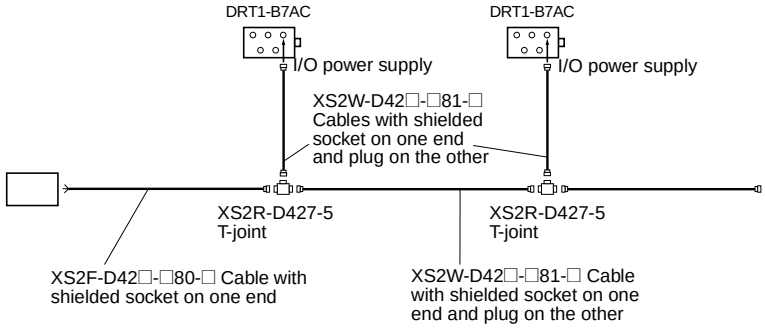

Note Tighten the connector by hand to a torque of 0.39 to 0.49 N·m. If the connector is not tightened sufficiently, it will not provide the expected environmental resistance and may come loose from vibration. Do not use pliers or other tools to tighten the connectors, because the tools may damage the connectors.

Connecting to B7AC Link Terminal Units (Communications Media)

Connect the I/O Wiring to the B7AC Interface Unit with the XS2-series Round Waterproof Connectors listed in the following table.

Compatible Connectors

Connector	Model
Cable with connector on one end (male plug)	XS2H-D42□-□80-□
Cable with connectors on both ends (socket and plug)	XS2W-D42□-□81-□
Connector plug assembly (male) (Crimp-connector or solder type)	XS2G-D4□□

Refer to the Catalog or manual for details on the device's connections before connecting any device.

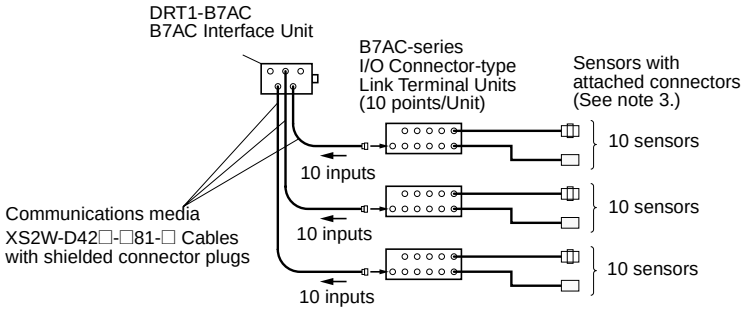

Note

1. Refer to the *OMRON Sensors Catalog (X42-E1-3)* for more details on the sensor connections and Round Waterproof Connectors.
2. A separate power supply cannot be connected to a B7AC Link Terminal Unit to supplement the power from the B7AC Interface Unit's internal power supply.
3. Limit Switches, Proximity Switches, Photoelectric Switches, etc. (Sensors with attached connectors, Pre-wired Sensors with connectors, and regular Pre-wired Sensors can be used.
4. Tighten the connector by hand to a torque of 0.39 to 0.49 N·m. If the connector is not tightened sufficiently, it will not provide the expected environmental resistance and may come loose from vibration. Do not use pliers or other tools to tighten the connectors, because the tools may damage the connectors.
5. Always cap unused connectors with an XS2Z-12 Waterproof Cover or XS2Z-15 Dust Cover, shown in the following diagram.

XS2Z-12 Waterproof Cover

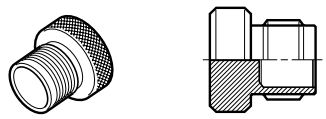

The connector will meet IP66 standards if a Waterproof Cover is attached. Tighten the connector by hand to a torque of 0.39 to 0.49 N·m.

XS2Z-15 Dust Cover

Press the Dust Cover onto the connector firmly. The Dust Cover will protect the connector from dust, but does not meet IP66 standards.

Maintaining Environmental Resistance

- The IP66 environmental resistance level will be lost if the surfaces where the contact block and cover meet are subjected to excessive force. Protect the contact block and cover from excessive force or shock.
- The IP66 standard is lower than waterproof standards. Do not submerge the system components.
- The body of the components is plastic resin. Do not place objects on the components or allow the components to be stepped on.

Tables of Compatible Connectors

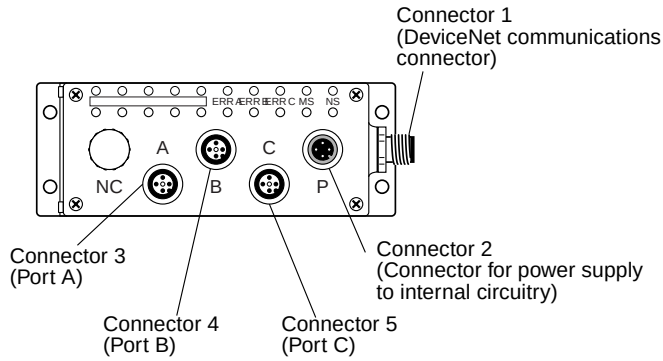

Connector 1 (DeviceNet Communications Connector)

Connector type	Model	Appearance
Cable with shielded connectors on both ends	DCA1-5CN□□W1	Plug (male) / Socket (female)
Cable with shielded connector (socket) on one end	DCA1-5CN□□F1	Socket (female)
Cable with shielded connector (plug) on one end	DCA1-5CN□□H1	Plug (male)
Shielded T-branch connector	DCN2-1	Socket (female) / Socket (female) / Plug (male)

Connector 2 (Connector for Power Supply to Internal Circuitry)

Connector type	Model	Appearance
Cable with connectors on both ends (socket and plug)	XS2W-D42□-□81-□	Plug (male) / Socket (female)
Cable with connector on one end (female socket)	XS2F-D42□-□80-□	Socket (female)
Connector socket assembly (female) (Crimp-connector or solder type)	XS2C-D4□□	Socket (female)
T-joint	XS2R-D427-5	Socket (female) / Socket (female) / Plug (male)

Connectors 3, 4, and 5 (Connectors for Ports A, B, and C) (Connectors to Connect the B7AC)

Connector type	Model	Appearance
Cable with connector on one end (male plug)	XS2H-D42□-□80-□	Plug (male)
Cable with connectors on both ends (socket and plug)	XS2W-D42□-□81-□	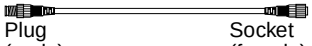 Plug (male) Socket (female)
Connector socket assembly (male) (Crimp-connector or solder type)	XS2G-D4□□	Plug (male)

SECTION 6
Special I/O Slave Units Specifications

This section provides specifications for the C200H I/O Link Unit and the RS-232C Unit.

6-1 C200H I/O Link Units 230
- 6-1-1 Communications Cable Connections 230
- 6-1-2 Node Address Setting (Rear DIP Switch) 230
- 6-1-3 Baud Rate and Hold/Clear Write Area Settings (Front DIP Switch) 231
- 6-1-4 Specifications 231
- 6-1-5 Components 232
- 6-1-6 Rotary Switch Settings 234
- 6-1-7 Special I/O Area Function and Read/Write Area Allocation 235
- 6-1-8 Explicit DeviceNet Messages 243
- 6-1-9 Using Explicit DeviceNet Messages. 250
- 6-1-10 Dimensions 256
- 6-1-11 Installing in a Control Panel 256
- 6-1-12 C200H I/O Link Unit Application Examples 256

6-2 RS-232C Units 260
- 6-2-1 Communications Cable Connections 260
- 6-2-2 Node Address and Baud Rate Settings 260
- 6-2-3 Specifications 262
- 6-2-4 Components 263
- 6-2-5 Word Allocations for Communications Status 265
- 6-2-6 Using the RS-232C Unit 266
- 6-2-7 Explicit DeviceNet Messages 269
- 6-2-8 Using Explicit DeviceNet Messages. 280
- 6-2-9 Dimensions 285
- 6-2-10 Mounting in Control Panels 285
- 6-2-11 Wiring 286
- 6-2-12 RS-232C Unit Application Examples. 288
- 6-2-13 Reading RS-232C Unit Parameters 292
- 6-2-14 Reading Data Received by RS-232C Unit Ports 294

6-1 C200H I/O Link Units

The C200H I/O Link Unit is a Special I/O Slave Unit that allows data from any area in the CPU Unit of the PLC to be read or written from the Master Unit. Using the C200H I/O Link Unit, a Slave PLC can be controlled by the Master through the DeviceNet Network.

Memory areas being used by other Special I/O Units can also be specified, allowing Special I/O Units mounted to the Slave PLCs to also be controlled indirectly from the Master.

6-1-1 Communications Cable Connections

Wire communications cables to the C200H I/O Link Unit using the standard Square Connectors, just like General-purpose Slaves. This section does not explain how to connect communications cables. For details on connecting the cables, refer to *4-2 Connecting Communications Cables to General-purpose Slaves*.

6-1-2 Node Address Setting (Rear DIP Switch)

The DIP switch on the rear panel of the Unit is used to set the node address for the C200H I/O Link Unit.

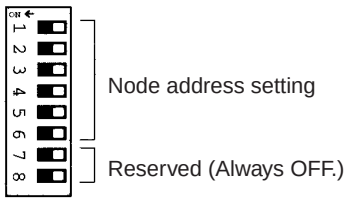

The node address is set with pins 1 through 6 of the DIP switch, as shown in the following table. Any node address within the setting range can be used as long as it isn't already set on another node.

DIP switch setting						Node address
Pin 6	Pin 5	Pin 4	Pin 3	Pin 2	Pin 1	
0	0	0	0	0	0	0 (default)
0	0	0	0	0	1	1
0	0	0	0	1	0	2
⋮						⋮
1	1	1	1	0	1	61
1	1	1	1	1	0	62
1	1	1	1	1	1	63

Any node address within the setting range can be used as long as it is not already set on another node in the network.

Note

1. (Refer to *Appendix A Node Address Settings Table* for a complete table of DIP switch and baud rate settings.)
2. The default setting is 0. Because the node address setting for the C200H I/O Link Unit is made on the rear panel DIP switch, the Unit must be removed before the setting can be changed. For this reason, be sure the setting is correct before configuring the network.
3. Pins 7 and 8 are reserved for system use. They must always be set to OFF.
4. If the same node address is used for two different nodes, a node duplication error will occur.

6-1-3 Baud Rate and Hold/Clear Write Area Settings (Front DIP Switch)

The DIP switch on the front panel of the Unit is used to set the baud rate and Hold/Clear Write Area data for communications error. The functions and setting for the front panel DIP switch are as shown in the following diagram.

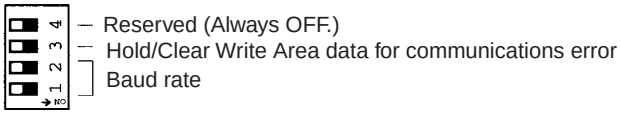

Pin	Function	Setting
1	Baud rate	See the next table.
2		
3	Hold/Clear Write Area data for communications error	OFF: Clear (default) ON: Hold
4	Reserved	Leave this pin set to OFF.

Baud Rate

Pins 1 and 2 are used to set the baud rate as shown in the following table.

Pin 1	Pin 2	Baud rate
OFF	OFF	125 kbps (default)
ON	OFF	250 kbps
OFF	ON	500 kbps
ON	ON	Not allowed.

Note

1. Always turn OFF the Slave's power supply (including the communications power supply) before changing the baud rate setting.
2. Set the same baud rate on all of the nodes (Master and Slaves) in the Network. Any Slaves with baud rates different from the Master's rate will not be able to participate in communications, and may cause communications errors to occur between nodes with correct baud rate settings.

6-1-4 Specifications

General Specifications

Item	Specification
Model	C200HW-DRT21
Connectable PLCs	CS1H/G, C200HX/HG/HE(-Z)
Communications power supply voltage	11 to 25 V DC (Supplied from the communications connector.)
Internal current consumption	Communications: 45 mA max. Internal circuits: 250 mA max. (5 V DC supplied via PLC's Backplane.)
Mounting	Mounted on a CS1H/G or C200HX/HG/HE Backplane.
Weight	250 g max.

Note All other specifications except those listed correspond to those of the C200HX/HG/HE PLCs.

Communications Specifications

Item	Specification
I/O points	Input: 512 points max. (32 words) Output: 512 points max. (32 words)
Memory areas that can be allocated	C200HX/HG/HE: CIO, DM, HR, AR, LR, TIM/CNT, and EM (bank 0 only) CS1H/CS1G: CIO, D, H, T (PVs), and EM (bank 0 only)
Default allocation area	Write area: One word, IR 350 Read area: One word, IR 50
Maximum message length	Read: 200 bytes Write: 200 bytes
Settings	Rotary switch: Unit number (Machine No.) Rear panel DIP switch: Node address Front panel DIP switch: Baud rate, Hold/Clear Write Area data for communications error.
Indicators	MS, NS indicators (2-color): Unit status 7-segment display (2-digit:): Node address, error codes Dot indicators: Read/Write Area, default settings

6-1-5 Components

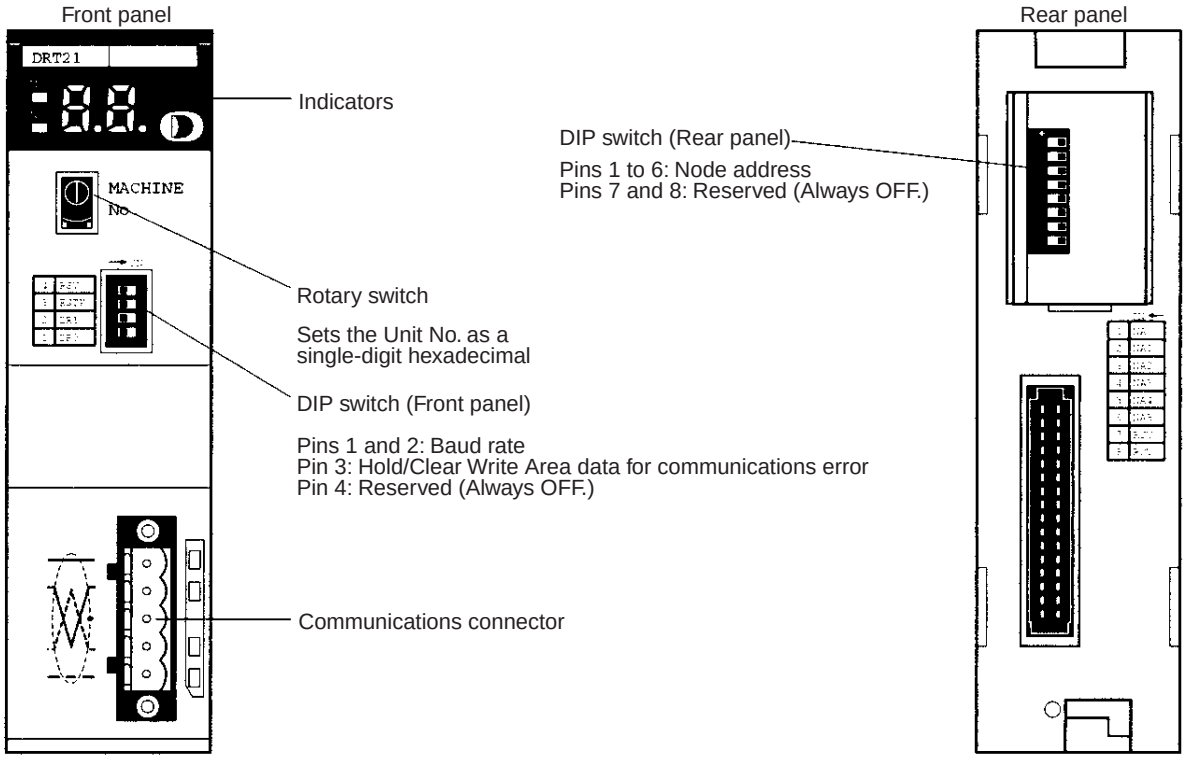

Indicators

The indicators display the status of the C200H I/O Link Unit and the Network. When the Network is operating normally, the 7-segment display shows the C200H I/O Link Unit's node address; when an error has occurred, it shows an error code and the faulty node's node address.

Indi-cator	Color	Status	Definition	Meaning
MS	Green	ON	Device Operational	Normal operating status.
		Flashing	Device in Standby	Reading switch settings.
	Red	ON	Unrecoverable Fault	Unit hardware error: Watchdog timer error.
		Flashing	Minor Fault	Switch settings incorrect, etc.
	---	OFF	No Power	CPU Unit error, power isn't being supplied, waiting for initial processing to start, or the Unit is being reset.
NS	Green	ON	Link OK. On-line, Connected.	Network is operating normally (communications established)
		Flashing	On-line, Not Connected	Network is operating normally, but communications have not yet been established.
	Red	ON	Critical Link Failure	A fatal communications error has occurred. Network communications are not possible. Check for a node address duplication or Bus Off error.
		Flashing	Connection Time-out	Communications timeout.
	---	OFF	Not Powered/ Not On-Line	Checking for node address duplication on the Master, switch settings are incorrect, or the power supply is OFF.

Seven-Segment Display

In addition to the MS and NS indicators, a C200H I/O Link Unit has a 2-digit, 7-segment display that normally displays the C200H I/O Link Unit's node address. When an error occurs, the display will alternate between the error code and the node address of the faulty Slave. The dots at the lower-right of each digit indicate the Read/Write Area setting status (default/user settings).

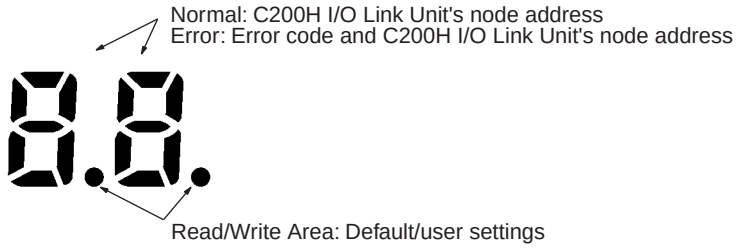

Status		Display	
Error	Watchdog timer	Not lit	
	Memory or system error	Error code only	Lit
	Other errors	Error code and error node address alternate (see diagram below)	

Dot Indicators

Status	Display
Read/Write Area default settings	Both dots lit.
Read/Write Area user settings	Both dots not lit.

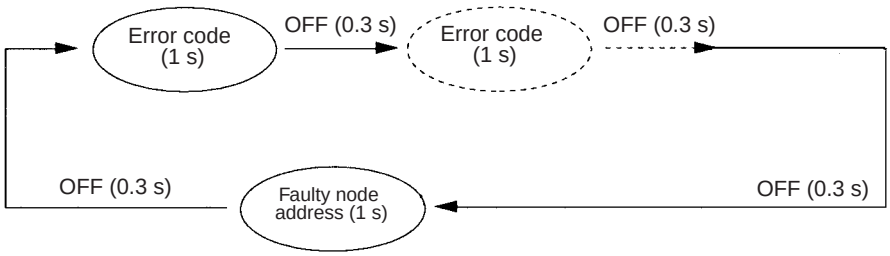

If several errors occur at the same time, the error codes will be displayed in order of node address.

6-1-6 Rotary Switch Settings

The rotary switch is used to set the C200H I/O Link Unit's unit number (Machine No.).

PLC	Setting method	Setting range
C200HX/HG-CPU5□/6□/8□ (-Z)	Set as a one-digit hexadecimal value.	0 to F
C200HX/HG-CPU3□/4□(-Z) C200HE (-Z) all models		0 to 9

Provided the unit number is not being used by another Special I/O Unit mounted to the same PLC, the settings can be made anywhere within the setting range. Use a small flat-blade screw driver, and take care not to scratch the rotary switch when making the setting.

Note

1. Always turn OFF the PLC's power supply before changing the rotary switch setting.
2. The unit number determines which words will be allocated to the Unit in the Special I/O Area.
3. If the C200H I/O Link Unit and another Special I/O Unit mounted to the same PLC have the same unit number, an error will occur on the PLC and the Unit will not be able to participate in the DeviceNet Network.
4. When a C200H I/O Link Unit and a DeviceNet Master Unit are mounted to the same PLC, set the C200H I/O Link Unit's unit number higher than the Master Unit's unit number. When the C200H I/O Link Unit has a higher unit number, it will recognize the Master Unit when the PLC is turned ON, so you can set Read/Write Areas that do not overlap.

   If the C200H I/O Link Unit is mistakenly given a lower unit number, the Master Unit will recognize the C200H I/O Link Unit when the PLC is turned ON and it will not be possible to use fixed allocation. In this case, you must use the Configurator to customize the Master Unit's Input/Output Areas so that they do not overlap with the C200H I/O Link Unit's areas.

6-1-7 Special I/O Area Function and Read/Write Area Allocation

The C200H I/O Link Unit allows data from any area in the CPU Unit of the PLC to be read or written from the Master Unit, depending on the Special I/O Area settings. In order for the C200H I/O Link Unit and the Master to operate together, the Read/Write Area on the C200H I/O Link Unit and the allocated words on the Master are linked, as illustrated in the following diagram.

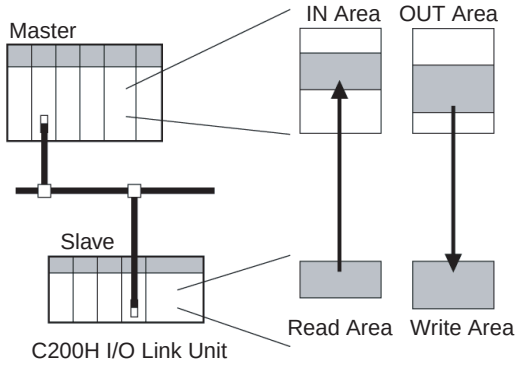

Note When using the Read Area only, set the size of the Write Area to zero bytes. Similarly, if using the Write Area only, then set the size of the Read Area to zero bytes.

Special I/O Area Words and Configuration

Words are allocated in the PLC's Special I/O Area according to the Unit number, as illustrated in the following table.

Unit number	Special I/O Area words	
	C200HX/HG/HE (-Z)	CS1H/G
0	IR 100 to IR 109	CIO 2000 to CIO 2009
1	IR 110 to IR 119	CIO 2010 to CIO 2019
2	IR 120 to IR 129	CIO 2020 to CIO 2029
3	IR 130 to IR 139	CIO 2030 to CIO 2039
4	IR 140 to IR 149	CIO 2040 to CIO 2049
5	IR 150 to IR 159	CIO 2050 to CIO 2059
6	IR 160 to IR 169	CIO 2060 to CIO 2069
7	IR 170 to IR 179	CIO 2070 to CIO 2079
8	IR 180 to IR 189	CIO 2080 to CIO 2089
9	IR 190 to IR 199	CIO 2090 to CIO 2099
A	IR 400 to IR 409	CIO 2100 to CIO 2109
B	IR 410 to IR 419	CIO 2110 to CIO 2119
C	IR 420 to IR 429	CIO 2120 to CIO 2129
D	IR 430 to IR 439	CIO 2130 to CIO 2139
E	IR 440 to IR 449	CIO 2140 to CIO 2149
F	IR 450 to IR 459	CIO 2150 to CIO 2159

In the C200H I/O Link Unit, the Special I/O Area is used as illustrated below.

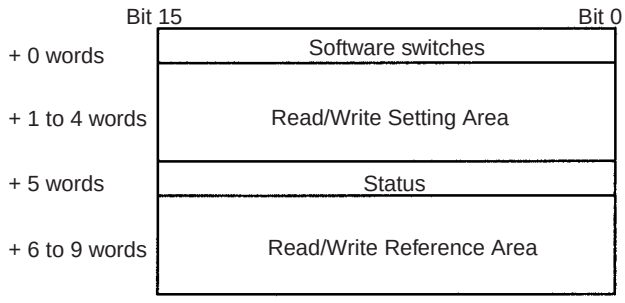

Software Switches

The functions of the software switches are illustrated in the following diagram.

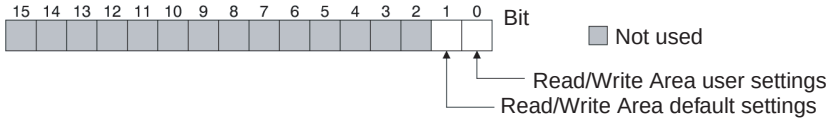

Bit 00: Read/Write Area User Settings

To enable user settings for the Read and Write Areas, turn ON software switch bit 00. The result of the operation (normal completion or error completion) will be indicated in status bit 09 or bit 10 (first word + 5 words). Before turning OFF software switch bit 00, check whether status bit 09 or bit 10 is ON.

The sizes of the Read and Write Areas and the first words in the Read and Write Areas that have been set in the Read/Write Setting Area will be stored in the Master Unit's non-volatile memory when bit 00 changes from OFF to ON.

Note

1. The Read/Write Area user settings software switch is effective only when the PLC is in PROGRAM mode. If used in other operating modes, an error will occur (error code C0 Hex). When a C0 error occurs, switch the PLC to PROGRAM mode and try the operation again.
2. Read/Write Area settings will not become effective by manipulating the software switch alone. After changing the settings, either reset the Unit or restart the PLC to enable the new settings.
3. The Read/Write Area user settings are stored in the C200H I/O Link Unit's EEPROM memory. Once they have been set, they will not change when the Unit is turned OFF or reset, and data from the set areas can be sent and received from the next time the Unit is started.
4. There is a limit to the number of times data can be written to EEPROM. Do not exceed the EEPROM write life (1 million writes).

Bit 01: Read/Write Area Default Settings

To return the Read and Write Areas to the default settings, turn software switch bit 01 ON.

Note

1. The Read/Write Area default settings software switch is effective only when the PLC is in PROGRAM mode. If used in other operating modes, an error will occur (error code C0 Hex). When a C0 error occurs, switch the PLC to PROGRAM mode and try the operation again.
2. Read/Write Area default settings do not become effective by changing this bit setting alone. The Read/Write Area default settings will not become effective by manipulating the software switch alone. After changing the settings, either reset the Unit or restart the PLC to enable the new settings.
3. The default settings for the Read and Write Areas are as follows:
   Read Area: IR 50 (No. of words: 1)
   Write Area: IR 350 (No. of words: 1)

Read/Write Setting Area

The Read/Write Setting Area is configured as shown in the following illustration. After setting data for the Read and Write Areas, turn software switch bit 00 ON, and then restart the Unit to set the Read Area and Write Area.

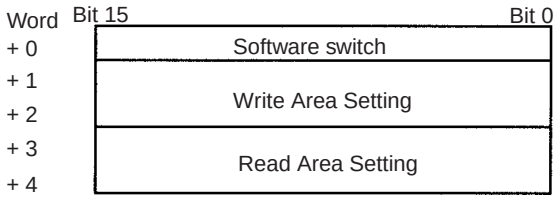

Specify the area size, area, and address of the first word for the Read Area and the Write Area.

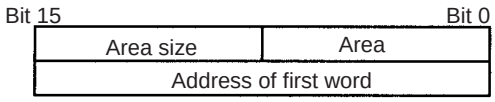

Area Size: Set in hexadecimal in byte units.
The setting range is 0 to 40 Hex (0 to 64 decimal, 0 to 32 words).

Area: The area is set as follows:

Setting	Area		Word range
01 Hex	IR Area 1 (CIO)		Write Area: IR 000 to IR 235 Read Area: IR 000 to IR 235
02 Hex	IR Area 2 (CIO)		IR 300 to IR 511
03 Hex	Data Memory Area (DM or D)		DM 0000 to DM 4095 (C200HE-CPU11-E only) DM 0000 to DM 5999 (All except C200HE-CPU11-E)
04 Hex	LR Area		LR 00 to LR 63
05 Hex	HR Area (HR or H)		HR 00 to HR 99
06 Hex	C200HX/HG/HE (-Z)	AR Area	AR 00 to AR 27 (Can be set for Read Area only)
	CS1H/G	Holding Area (H)	H100 or H102 to H127 (Specify the starting word with 00 Hex or 02 to 1B Hex.)
07 Hex	C200HX/HG/HE (-Z)	Timer/Counter Area (TIM/CNT)	TIM/CNT 000 to TIM/CNT 511
	CS1H/G	Timer Area (T)	T 000 to T 511
08 Hex	EM Area (bank 0 only)		EM 0000 to EM 6143

Address of First Word: The address first word of the memory area is set in hexadecimal. Areas that can be specified differ depending on the model of PLC used and the area.

Example: Setting DM 1000 to DM 1015 (16 words = 32 bytes).

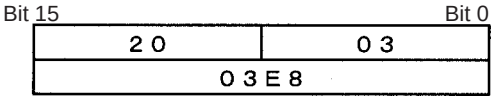

Status Area

The Status Area indicates the operating status of the C200H I/O Link Unit. The meaning of each bit is as shown in the following diagram.

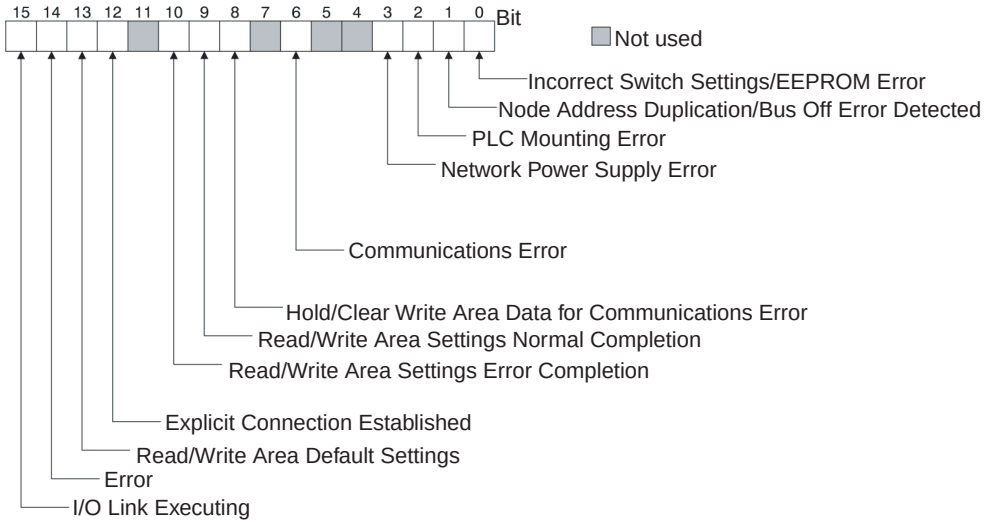

Bit	Name	ON	OFF
0	Incorrect Switch Settings/ EEPROM Error Flag	Turns ON when an incorrect switch setting or an error in EEPROM is detected.	Turns OFF when the PLC or C200H I/O Link Unit is restarted.
1	Node Address Duplication/ Bus Off Error Flag	Turns ON when the same node address is set for more than one Unit or a Bus Off (communications are halted by many communications errors) error is detected.	Turns OFF when the PLC or C200H I/O Link Unit is restarted.
2	PLC Mounting Error Flag	Turns ON when a PLC mounting error is detected. (When another Communications Unit is mounted to the same PLC and it's Read/Write Area settings are set to default.)	Turns OFF when the Read/Write Area is set to user settings and the C200H I/O Link Unit is restarted.
3	Network Power Supply Error Flag	Turns ON when power OFF is detected in the DeviceNet Network.	Turns OFF when the communications power supply returns to a normal voltage.
6	Communications Error Flag	Turns ON when a DeviceNet communications error is detected.	Turns OFF when communications return to normal.
8	Hold/Clear Write Area Data for Communications Error Flag	Turns ON when the Unit is restarted after pin 3 on the front panel DIP switch has been set to ON (Hold).	Turns OFF when the Unit is restarted after pin 3 on the front panel DIP switch has been set to OFF (Clear).
9	Read/Write Area Settings Normal Completion Flag	Turns ON when changes to the Read/ Write Area settings have been completed normally using software switch bit 0 or 1.	Turns OFF when software switch bits 0 and 1 are both set to OFF.
10	Read/Write Area Settings Error Completion Flag	Turns ON when an error has occurred attempting to make changes to the Read/ Write Area settings using software switch bit 0 or 1.	Turns OFF when software switch bits 0 and 1 are both set to OFF.
12	Explicit Connection Established Flag	Turns ON when an explicit connection has been established with the Master Unit.	Turns OFF when the explicit connection with the Master Unit is broken.
13	Read/Write Area Default Settings Flag	Turns ON when Read/Write Area default settings are used.	Turns OFF when Read/Write Area user settings are used.
14	Error Flag	Turns ON when any kind of error occurs. (When Status bits 00, 01, 02, 06, or 10 are ON.)	Turns OFF when all errors have been resolved. (When Status bits 00, 01, 02, 06, and 10 are all OFF.)
15	I/O Link Executing Flag	Turns ON when a connection is established with the Master Unit.	Turns OFF when a connection with the Master Unit is broken.

Read/Write Reference Area

The current setting status of the Read Area and Write Area are indicated as shown in the following diagram. (The Read/Write Area settings are not output to this area unless the C200H I/O Link Unit is restarted after software switch bit 00 is turned ON.)

	Bit 15 … Bit 0
+ 6	Current Write Area setting
+ 7	
+ 8	Current Read Area setting
+ 9	

Data is stored in these words in the same form as it is for the Read/Write Setting Area. Refer to page 237 for details.

Setting the Read and Write Areas

Use the following procedure to set the Read and Write Areas.

Using Control bits

This procedure uses the Read/Write Setting Area and the software switch in the C200H I/O Link Unit's Special I/O Area to set the Read and Write Areas.

1,2,3...

1. Turn ON the power to the PLC to which the C200H I/O Link Unit is mounted and set the PLC to PROGRAM mode.
2. Using a Peripheral Device, such as a Programming Console, set the Read Area and Write Area in the Read/Write Setting Area in Special I/O Area words +2 to +4. Example: Read Area: IR 100 to IR 119, Write Area: DM 0160 to DM 0189.

+ 1	3A03	Write Area: 58 bytes, DM Area
+ 2	00A0	Write Area: First word address 160
+ 3	2801	Read Area: 40 bytes, IR Area
+ 4	0064	Read Area: First word address 100

3. Using the Peripheral Device, turn ON software switch bit 00 in Special I/O Area word +0 (Read/Write Area user settings). If it is already ON, turn it OFF and then ON again.
4. Check that Status Area bit 09 in Special I/O Area word +5 is ON (Read/Write Area Setting Normal Completion Flag).

   Note At this point, the Read/Write Area settings are written to memory in the C200H I/O Link Unit, but they are not yet effective. Operation will continue using the previous Read/Write Area settings. (The contents of the Read/Write Reference Area will also remain at the previous settings.)
5. Reset the C200H I/O Link Unit, or restart the PLC to which the C200H I/O Link Unit is mounted.

   Note a) When the C200H I/O Link Unit is mounted in a C200HX/HG/HE PLC, it can be reset by turning ON the corresponding Special I/O Unit Restart Bit in AR 01 or SR 281. When the Unit is mounted in a CS1H/G PLC, it can be reset by turning ON the corresponding Special I/O Unit Restart Bit in A502 to A507.

   b) When the Unit is restarted, the Read/Write settings will become effective and the number of IN/OUT words for the C200H I/O Link Unit will be set.
6. Correct the C200H I/O Link Unit's scan list registration in the Master's scan list. There are two methods of registering the scan list.
   - Turn ON the Enable Scan List software switch on the Master Unit.

- Create a scan list and register the Unit using a DeviceNet Configurator.

If the scan list is registered correctly, data will automatically be transferred and received between the Master Unit and the C200H I/O Link Unit. For further details on Master Unit operations, refer to the Master Unit's *Operation Manual* or the *DeviceNet Configurator Operation Manual*.

7. When necessary, it is possible to read and write IN/OUT Areas on the Master, and control the PLC (Slave) to which the C200H I/O Link Unit is mounted. By writing data to the C200H I/O Link Unit OUT Area on the Master, data can be written to the Slave's Write Area, and by reading data from the IN Area, data can be read from the Read Area of the Slave.

Note Once the Read and Write Areas has been set, data will be automatically transferred and received when the Master and Slaves are restarted.

Using the DeviceNet Configurator

The Read/Write Area can be set using the OMRON DeviceNet Configurator (version 2.□ or later). When using a version earlier than 2.□, contact your local sales office before use. (Version information can be confirmed from the Help Menu.)

1,2,3...

1. Connect a DeviceNet Configurator to the DeviceNet Network and go online.
2. Turn ON the power to the PLC to which the C200H I/O Link Unit is mounted, and place the PLC into PROGRAM mode.
3. Locate the C200H I/O Link Unit's icon in the *Network Configuration* window and double click the icon.

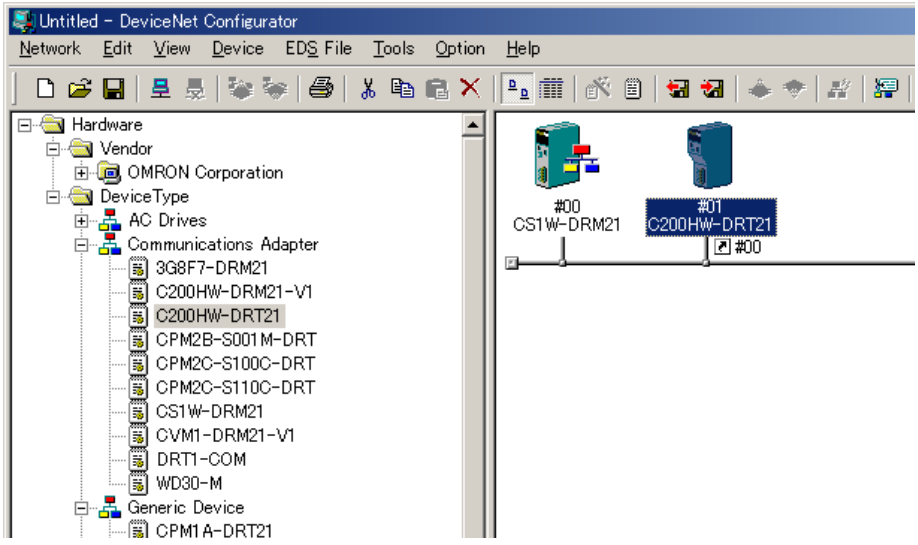

The Device Parameters Editing Screen (Read/Write Area parameter setting screen) will be displayed.

4. Either double click on the Read/Write parameter that you want to change or select the desired parameter and press the **Enter** Key.

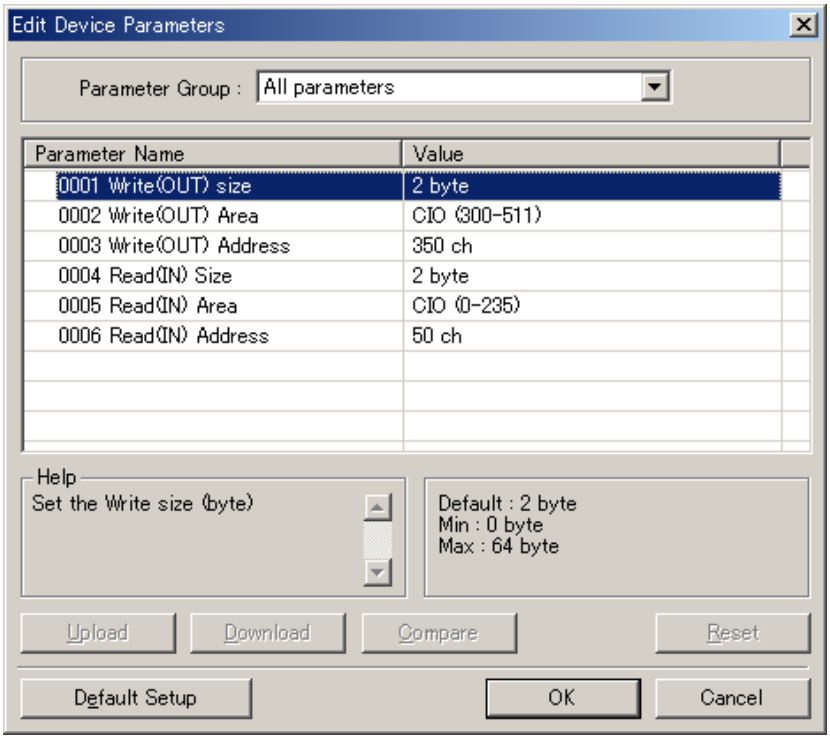

It will become possible to change the parameter.

5. Set or change parameters.

   a) *Size Setting Screen*
   Input the new value and press the **Enter** Key, or click another location in the window.

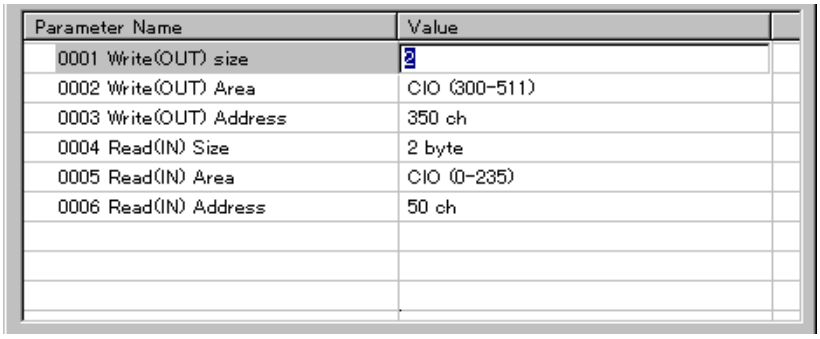

b) **Area Setting Screen**
Select a data area from the pull-down menu and press the **Enter** Key, or click another location in the window. (When using a CS1H/G, words AR 00 to AR 27 correspond to H100 to H127.)

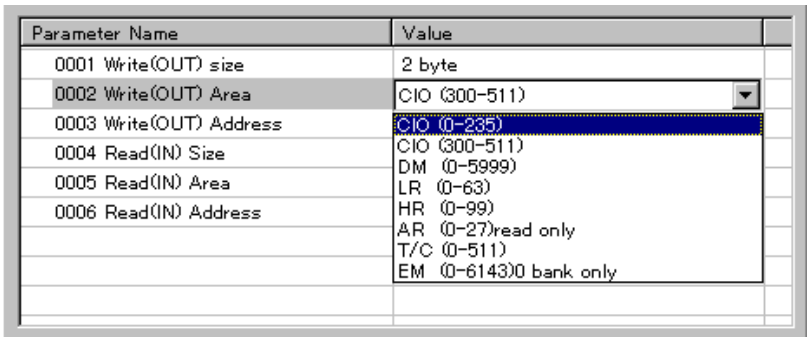

c) **First Word Address Setting Screen**
Input the new value and press the **Enter** Key, or click another location in the window.

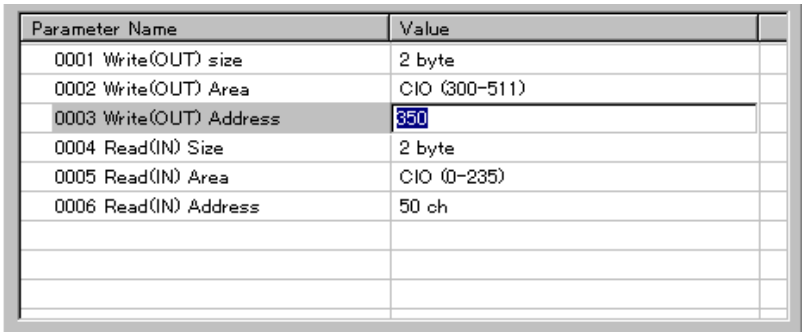

6. When the desired parameter changes and settings have been completed, click the ***Download*** Button. The edited parameters will be written to the C200H I/O Link Unit.

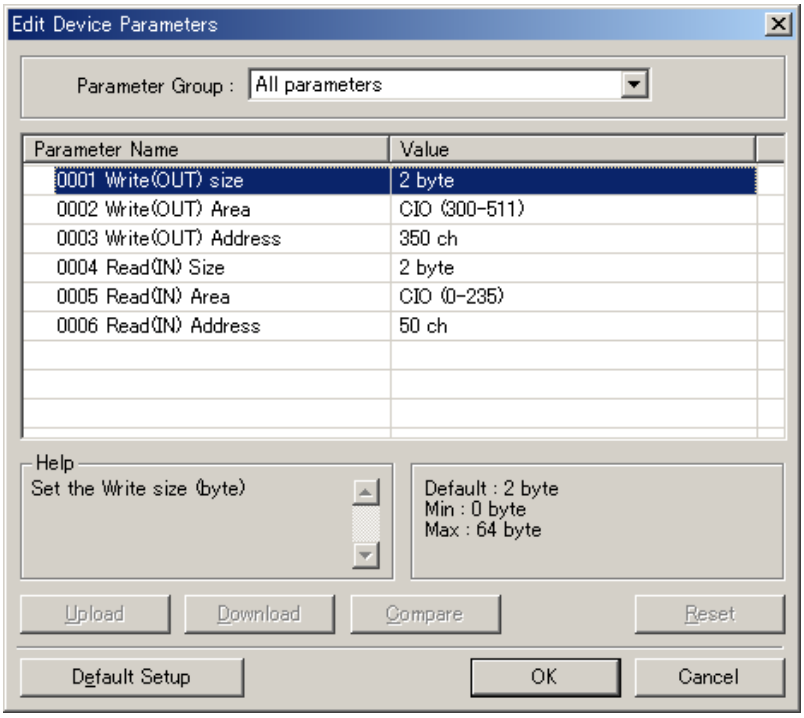

7. Click the ***Reset*** button to enable the edited parameters.

   A reset confirmation message will be displayed. Click the ***Yes*** button to confirm. When the C200H I/O Link Unit is reset, the corresponding Special I/O Unit Restart Bit in AR 01 of the PLC will be turned ON.

   If the Read/Write Area sizes have been changed, you must correct the Master's I/O allocation settings.

Note Once the Read/Write Area has been set, data will be automatically transferred and received when the Master and Slaves are restarted.

6-1-8 Explicit DeviceNet Messages

Explicit DeviceNet messages (commands) can be sent from the Master to write data to any area of the CPU Unit of the PLC to which the C200H I/O Link Unit is mounted.

This section the explicit messages supported by the C200H I/O Link Unit, and provides usage examples. For further details on using explicit messages on the Master Unit, refer to the Master Unit's Operation Manual.

C200H I/O Link Unit Explicit Message List

Explicit message	Function	Page
BYTE DATA READ	Reads the specified node's data in bytes. Word data is read from the leftmost bit to the rightmost bit. The maximum data size for read data is 200 bytes.	243
BYTE DATA WRITE	Writes the specified node's data in byte. Word data is written from the leftmost bit to the rightmost bit. The maximum data size for write data is 200 bytes.	245
WORD DATA READ	Reads the specified node's data in words. Word data is read from the rightmost bit to the leftmost bit. The maximum data size for read data is 100 words.	247
WORD DATA WRITE	Writes the specified node's data in words. Word data is written from the rightmost bit to the leftmost bit. The maximum data size for write data is 100 words.	248
Error response	When an error occurs in an explicit message (command), an error response is sent returned by the C200H I/O Link Unit.	250

Use BYTE DATA READ and BYTE DATA WRITE when sending explicit messages (commands) from an OMRON DeviceNet Master. When using other manufacturer's DeviceNet Masters to send explicit messages (commands), use WORD DATA READ and WORD DATA WRITE.

The number of bytes specified for Class ID and Instance ID differ according to the type of Master used. For an OMRON DeviceNet Master, 2 bytes (4 digits) are specified. For an example of this, see *6-1-9 Using Explicit DeviceNet Messages*.

BYTE DATA READ

BYTE DATA READ will read data from any area of CPU Unit of the PLC to which the C200H I/O Link Unit is mounted. Data is returned from the leftmost bit to the rightmost bit.

Command Block

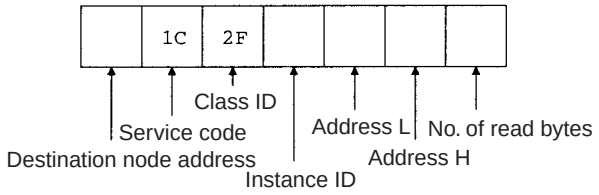

Response Block

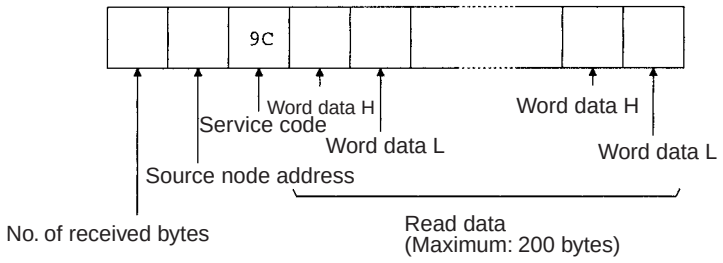

Parameters

Destination Node Address (Command)

The node address of the C200H I/O Link Unit reading the data, in single-byte (2-digit) hexadecimal.

Service Code (Command, Response)

In the command, IC Hex is specified. In the response, the leftmost bit is turned ON and 9C Hex is returned.

Class ID (Command)

Always 2F Hex.

Instance ID (Command)

Specifies the data area to be read, in hexadecimal, as shown in the following table.

Setting	Area		Word range
01 Hex	IR Area 1 (CIO)		Write Area: IR 000 to IR 235 Read Area: IR 000 to IR 235
02 Hex	IR Area 2 (CIO)		IR 300 to IR 511
03 Hex	Data Memory Area (DM or D)		DM 0000 to DM 4095 (C200HE-CPU11-E only) DM 0000 to DM 5999 (All except C200HE-CPU11-E)
04 Hex	LR Area		LR 00 to LR 63
05 Hex	HR Area (HR or H)		HR 00 to HR 99
06 Hex	C200HX/HG/HE (-Z)	AR Area	AR 00 to AR 27 (Can be set for Read Area only)
	CS1H/G	Holding Area (H)	H100 or H102 to H127 (Specify the starting word with 00 Hex or 02 to 1B Hex.)
07 Hex	C200HX/HG/HE (-Z)	Timer/Counter Area (TIM/CNT)	TIM/CNT 000 to TIM/CNT 511
	CS1H/G	Timer Area (T)	T 000 to T 511
08 Hex	EM Area (bank 0 only)		EM 0000 to EM 6143

Address L, Address H (Command)

The address in hexadecimal of the first word of data to be read.
Address L: Rightmost 2 digits of the address in 4-digit hexadecimal.
Address H: Leftmost 2 digits of the address in 4-digit hexadecimal.
When specifying a Holding Area word (H100 or H102 to H127) in a CS1H/G PLC, specify the first word in hexadecimal with 0000 Hex for H100 or 0002 to 001B Hex for H102 to H127.

No. of Read Bytes (Command)

The number of bytes of read data, in single-byte (2-digit) hexadecimal. The specified range is 01 to C8 Hex (1 to 200 in decimal).

No. of Received Bytes (Response)

The number of bytes received from the source node address is returned in hexadecimal.

Source Node Address (Response)

The node address of the C200H I/O Link Unit that returned the response is returned in hexadecimal.

Read Data (Response)

The specified data (area, words, and number of bytes) is returned from word H (leftmost byte: bits 08 to 15) to word L (rightmost byte: bits 00 to 07). If an odd number of read bytes have been specified, the last byte of data moves into word H.

Precautions

Actual addresses for Address H and Address L and actual number of bytes to be read differ according to the model of PLC to which the C200H I/O Link Unit is mounted and the memory area. Be sure to specify bytes within the data area range.

BYTE DATA WRITE

BYTE DATA WRITE will write data to any area in the CPU Unit of the PLC to which the C200H I/O Link Unit is mounted. Write data is specified from the leftmost byte to the rightmost byte.

Command Block

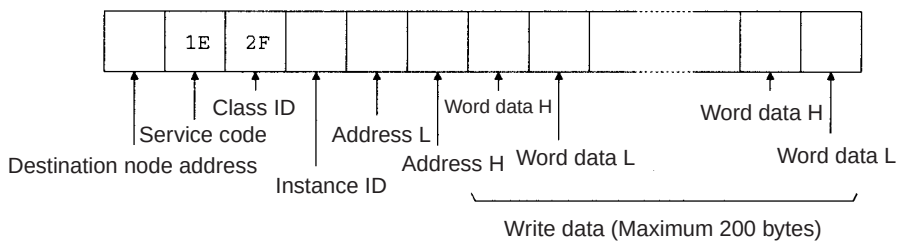

Response Block

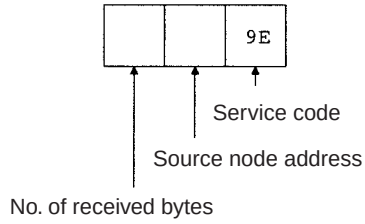

Parameters

Destination Node Address (Command)

The node address of the C200H I/O Link Unit writing the data in single-byte (2-digit) hexadecimal.

Service Code (Command, Response)

In the command, IE Hex is specified. In the response, the leftmost bit is turned ON and 9E Hex is returned.

Class ID (Command)

Always 2F Hex.

Instance ID (Command)

Specifies the data area to be written, in hexadecimal, as shown in the following table.

Setting	Area		Word range
01 Hex	IR Area 1 (CIO)		Write Area: IR 000 to IR 235 Read Area: IR 000 to IR 235
02 Hex	IR Area 2 (CIO)		IR 300 to IR 511
03 Hex	Data Memory Area (DM or D)		DM 0000 to DM 4095 (C200HE-CPU11-E only) DM 0000 to DM 5999 (All except C200HE-CPU11-E)
04 Hex	LR Area		LR 00 to LR 63
05 Hex	HR Area (HR or H)		HR 00 to HR 99
06 Hex	C200HX/HG/HE (-Z)	AR Area	AR 00 to AR 27 (Can be set for Read Area only)
	CS1H/G	Holding Area (H)	H100 or H102 to H127 (Specify the starting word with 00 Hex or 02 to 1B Hex.)
07 Hex	C200HX/HG/HE (-Z)	Timer/Counter Area (TIM/CNT)	TIM/CNT 000 to TIM/CNT 511
	CS1H/G	Timer Area (T)	T 000 to T 511
08 Hex	EM Area (bank 0 only)		EM 0000 to EM 6143

Address L, Address H (Command)

The address in hexadecimal of the first word of data to be written.
Address L: Rightmost 2 digits of the address in 4-digit hexadecimal.
Address H: Leftmost 2 digits of the address in 4-digit hexadecimal.

Write Data (Command)

Specify the data to be written to the specified area and words from word H (leftmost byte: bits 08 to 15) to word L (rightmost byte: bits 00 to 07). If an odd number of read bytes have been specified, the last byte of data moves into word H.

No. of Received Bytes (Response)

The number of bytes received from the source node address is returned in hexadecimal.

Source Node Address (Response)

The node address of the C200H I/O Link Unit that returned the response is returned in hexadecimal.

Note Actual addresses for Address H and Address L and actual number of bytes to be written differ according to the model of PLC to which the C200H I/O Link

Unit is mounted and the memory area. Be sure to specify bytes within the data area range.

WORD DATA READ

WORD DATA READ will read data from any area of the CPU Unit of the PLC to which the C200H I/O Link Unit is mounted. Data is returned from the right-most byte to the leftmost byte.

Command Block

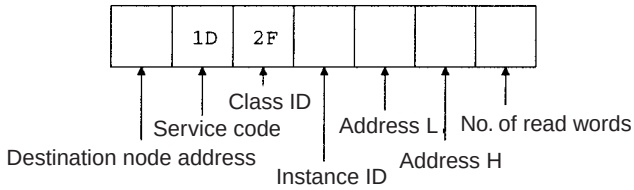

Response Block

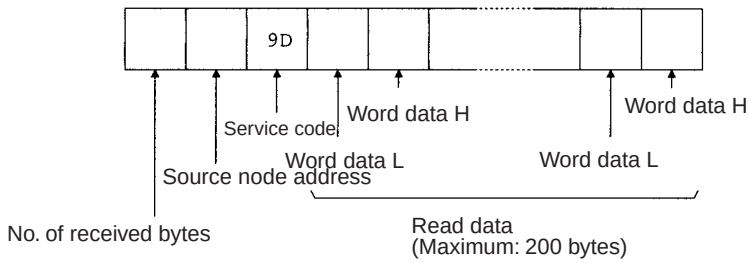

Parameters

Destination Node Address (Command)

The node address of the C200H I/O Link Unit reading the data, in single-byte (2-digit) hexadecimal.

Service Code (command, response)

In the command, ID Hex is specified. In the response, the leftmost bit is turned ON and 9D Hex is returned.

Class ID (Command)

Always 2F Hex.

Instance ID (Command)

Specifies the data area to be read, in hexadecimal as shown in the following table.

Setting	Area		Word range
01 Hex	IR Area 1 (CIO)		Write Area: IR 000 to IR 235 Read Area: IR 000 to IR 235
02 Hex	IR Area 2 (CIO)		IR 300 to IR 511
03 Hex	Data Memory Area (DM or D)		DM 0000 to DM 4095 (C200HE-CPU11-E only) DM 0000 to DM 5999 (All except C200HE-CPU11-E)
04 Hex	LR Area		LR 00 to LR 63
05 Hex	HR Area (HR or H)		HR 00 to HR 99
06 Hex	C200HX/HG/HE (-Z)	AR Area	AR 00 to AR 27 (Can be set for Read Area only)
	CS1H/G	Holding Area (H)	H100 or H102 to H127 (Specify the starting word with 00 Hex or 02 to 1B Hex.)

Setting	Area		Word range
07 Hex	C200HX/HG/HE (-Z)	Timer/Counter Area (TIM/CNT)	TIM/CNT 000 to TIM/CNT 511
	CS1H/G	Timer Area (T)	T 000 to T 511
08 Hex	EM Area (bank 0 only)		EM 0000 to EM 6143

Address L, Address H (Command)

The address in hexadecimal of the first word of data to be read.
Address L: Rightmost 2 digits of the address in 4-digit hexadecimal.
Address H: Leftmost 2 digits of the address in 4-digit hexadecimal.
When specifying a Holding Area word (H100 or H102 to H127) in a CS1H/G PLC, specify the first word in hexadecimal with 0000 Hex for H100 or 0002 to 001B Hex for H102 to H127.

No. of read words (Command)

The number of words of read data, in single-byte (2-digit) hexadecimal. The specified range is 01 to 64 Hex (1 to 100 in decimal).

No. of received bytes (Response)

The number of bytes received from the destination node address is returned in hexadecimal.

Source node address (Response)

The node address of the C200H I/O Link Unit that returned the response is returned in hexadecimal.

Read data (Response)

The specified area type, words, and number of bytes of data are returned from word L (rightmost byte: bits 0 to 7) to word H (leftmost byte: bits 8 to 15).

Note Actual addresses for Address H and Address L and actual number of bytes to be read differ according to the model of PLC to which the C200H I/O Link Unit is mounted and the memory area. Be sure to specify data bytes within the data area range.

WORD DATA WRITE

WORD DATA WRITE will write data to any area of the CPU Unit of the PLC to which the C200H I/O Link Unit is mounted. Write data is specified from the rightmost byte to the leftmost byte.

Command Block

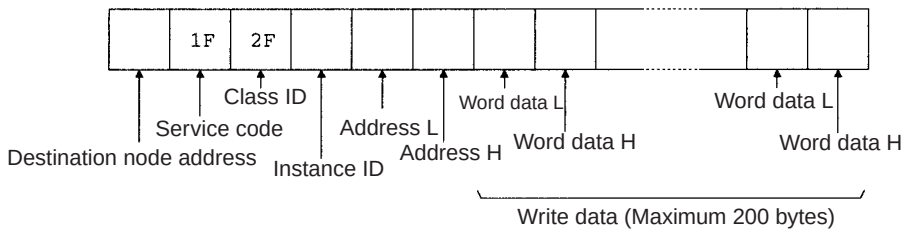

Response Block

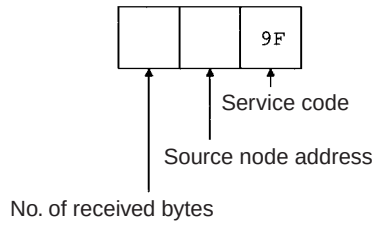

Parameters

Destination Node Address (Command)

The node address of the C200H I/O Link Unit writing the data, in single-byte (2-digit) hexadecimal.

Service Code (Command, Response)

In the command, IF Hex is specified. In the response, the leftmost bit is turned ON and 9F Hex is returned.

Class ID (Command)

Always 2F Hex.

Instance ID (Command)

Specifies the data area to be written in hexadecimal as shown in the following table.

Setting	Area		Word range
01 Hex	IR Area 1 (CIO)		Write Area: IR 000 to IR 235 Read Area: IR 000 to IR 235
02 Hex	IR Area 2 (CIO)		IR 300 to IR 511
03 Hex	Data Memory Area (DM or D)		DM 0000 to DM 4095 (C200HE-CPU11-E only) DM 0000 to DM 5999 (All except C200HE-CPU11-E)
04 Hex	LR Area		LR 00 to LR 63
05 Hex	HR Area (HR or H)		HR 00 to HR 99
06 Hex	C200HX/HG/HE (-Z)	AR Area	AR 00 to AR 27 (Can be set for Read Area only)
	CS1H/G	Holding Area (H)	H100 or H102 to H127 (Specify the starting word with 00 Hex or 02 to 1B Hex.)
07 Hex	C200HX/HG/HE (-Z)	Timer/Counter Area (TIM/CNT)	TIM/CNT 000 to TIM/CNT 511
	CS1H/G	Timer Area (T)	T 000 to T 511
08 Hex	EM Area (bank 0 only)		EM 0000 to EM 6143

Address L, Address H (Command)

The address in hexadecimal of the first word of data to be written.
Address L: Rightmost 2 digits of the address in 4-digit hexadecimal.
Address H: Leftmost 2 digits of the address in 4-digit hexadecimal.
When specifying a Holding Area word (H100 or H102 to H127) in a CS1H/G PLC, specify the first word in hexadecimal with 0000 Hex for H100 or 0002 to 001B Hex for H102 to H127.

Write Data (Command)

Specify the data to be written to the specified area and words from word H (leftmost byte: bits 08 to 15) to word L (rightmost byte: bits 00 to 07).

No. of Received Bytes (Response)

The number of bytes received from the source node address is returned in hexadecimal.

Source Node Address (Response)

The node address of the C200H I/O Link Unit that returned the response is returned in hexadecimal.

Note Actual addresses for Address H and Address L and actual number of words to be written differ according to the model of PLC to which the C200H I/O Link

Unit is mounted and the memory area. Be sure to specify bytes within the data area range.

Error Response

When there is an error in the explicit command, the C200H I/O Link Unit will return an error response as illustrated below.

Response Block

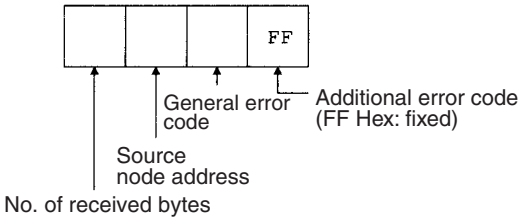

Parameters

No. of Received Bytes (Response)

The number of bytes received from the source node address is returned in hexadecimal.

Source Node Address (Response)

The node address of the C200H I/O Link Unit that returned the response is returned in hexadecimal.

General Error Code (Response)

The error code is returned in single-byte (2-digit) hexadecimal, as shown in the following table.

Error code	Name	Details
08 Hex	Service not supported	There is an error in the service code.
15 Hex	Too much data	There is too much data. (The data specified by the data write command exceeds the area range.)
13 Hex	Not enough data	There is not enough data (e.g., an odd number of bytes of data was specified for the WORD DATA WRITE command).
20 Hex	Invalid parameter	An error was made specifying the word address.
11 Hex	Reply data too large	The data specified by the data read command exceeds the area range.
16 Hex	Object does not exist	There is an error in the Class ID or Instance ID.

Additional Error Code (Response)

Always FF Hex.

6-1-9 Using Explicit DeviceNet Messages

Using CMND to Read Data (CS-series and CV-series)

In the following example, the CMND instruction is used to read words CIO 010 to CIO 029 (20 words) on the Slave Unit, from the Master in a CS-series or CV-series PLC.

Note If a CS-series PLC is being used, this example is applicable only when a CS-series Master Unit is mounted. Use the IOWR instruction when a C200HX/

HG/HE or C200HS Master Unit is mounted. In this case, refer to the *DeviceNet Master Unit Operation Manual* for details on using the IOWR instruction.
For more detailed information on explicit messages, refer to the *DeviceNet Master Unit Operation Manual*. For information on the CMND instruction, refer to the PLC's *Operation Manual* or *Programming Manual*.

Example Conditions

Master node address: 63
Slave network address: 1
Slave node address: 2

Example: Using the CMND Instruction

```
[CMND  S  D  C]
```

Command Words (S: First Command Word)

Word	Contents (Hex)	Meaning
S	28 01	EXPLICIT MESSAGE SEND command code: 28 01 Hex
S+1	02 1C	Slave node address: 2 BYTE DATA READ command service code: 1C Hex
S+2	00 2F	Class ID: 002F Hex
S+3	00 01	Instance ID: For IR Area 1: 0001 Hex
S+4	0A 00	Read start address: 10 = 000A Hex Address L: 0A Hex, Address H: 00 Hex
S+5	28 00	No. of bytes of read data: 40 bytes = 28 Hex (The rightmost byte is not used.)

D: Response Words (D: First Response Word)

Results are stored as shown in the following table.

Word	Contents (Hex)	Meaning
D	28 01	EXPLICIT MESSAGE SEND command code: 28 01 Hex
D+1	00 00	Response code (0000 Hex: Normal completion)
D+2	00 2A	No. of received bytes (data length after D+3): 42 bytes
D+3	02 9C	Slave node address: 2 BYTE DATA READ response service code: 9C Hex
D+4	HH LL	Data read from the Slave's IR10 to IR29. When the BYTE DATA READ command is used from an OMRON Master, data is stored in the Master in the same sequence as the Slave; leftmost byte to rightmost byte.
to	to	
D+23	HH LL	

Control Words (C: First Control Word)

Word	Contents (Hex)	Meaning
C	00 08	No. of bytes of command data: 11 bytes of command data, S
C+1	00 30	No. of bytes of response data: 48 bytes of response data, D
C+2	00 01	Destination node network address: 1

Word	Contents (Hex)	Meaning
C+3	3F FE	Master's node address: 63 Master's Unit address: FE Hex
C+4	00 00	Response returned, communications port No.: 0, No. of retries: 0
C+5	00 64	Response monitoring time: 10 s

Using CMND to Write Data (CS-series and CV-series)

In the following example, the CMND instruction is used to write data to words CIO 10 to CIO 29 (20 words) on the Slave Unit from the Master in a CS-series or CV-series PLC.

Note If a CS-series PLC is being used, this example is applicable only when a CS-series Master Unit is mounted. Use the IOWR instruction when a C200HX/HG/HE or C200HS Master Unit is mounted. In this case, refer to the *DeviceNet Master Unit Operation Manual* for details on using the IOWR instruction.
For more detailed information on explicit messages, refer to the *DeviceNet Master Unit Operation Manual*. For information on the CMND instruction, refer to the PLC's *Operation Manual* or *Programming Manual*.

Example Conditions

Master node address: 63
Slave network address: 1
Slave node address: 2

Example: Using the CMND Instruction

```
[CMND  S  D  C]
```

Command Words (S: First Command Word)

Word	Contents (Hex)	Meaning
S	28 01	EXPLICIT MESSAGE SEND command code: 28 01 Hex
S+1	02 1E	Slave node address: 2 BYTE DATA WRITE command service code: 1E Hex
S+2	00 2F	Class ID: 002F Hex
S+3	00 01	Instance ID: For IR Area 1: 0001 Hex
S+4	0A 00	Write start address: 10 = 000A Hex Address L: 0A Hex, Address H: 00 Hex
S+5	HH LL	Data written to the Slave's IR10 to IR29. When the BYTE DATA WRITE command is used from an OMRON Master, data is written to the Slave in the same sequence it is stored in the Master; leftmost byte to right-most byte.
to	to	
S+24	HH LL	

D: Response Words (D: First Response Word)

Results are stored as shown in the following table.

Word	Contents (Hex)	Meaning
D	28 01	EXPLICIT MESSAGE SEND command code: 28 01 Hex
D+1	00 00	Response code (0000 Hex: Normal completion)

Word	Contents (Hex)	Meaning
D+2	00 02	No. of received bytes (data length after D+3): 2 bytes
D+3	02 9E	Slave node address: 2 BYTE DATA WRITE response service code: 9E Hex

Control Words (C: First Control Word)

Word	Contents (Hex)	Meaning
C	00 32	No. of bytes of command data: 50 bytes of command data, S
C+1	00 08	No. of bytes of response data: 8 bytes of response data, D
C+2	00 01	Destination node network address: 1
C+3	3F FE	Master's node address: 63 Master's Unit address: FE Hex
C+4	00 00	Response returned, communications port No.: 0, No. of retries: 0
C+5	00 64	Response monitoring time: 10 s

Using the IOWR Instruction to Read Data (C200HX/HE PLCs)

n the example, the IOWR instruction is used to read words IR 010 to IR 029 (20 words) on the Slave Unit, and store them in the Master (C200HX/HG/HE PLCs) from DM 2000 onwards. For more detailed information on explicit messages, refer to the *DeviceNet Master Unit Operation Manual*. For information on the IOWR instruction, refer to the *SYSMAC C200HX/HG/HE PLCs Operation Manual*.

Example Conditions

Master node address: 63
Master's Unit address: 0
Slave node address: 2

Example: Using the IOWR Instruction

```
[IOWR  C  S  D]
```

C: Control Words (C: First Control Word)

Word	Contents (Hex)	Meaning
C	3F FE	Master's node address: 63 Master's Unit address: FE Hex

Source Words (S: First Source Word)

Word	Contents (Hex)	Meaning
S	82 07	Response storage words: DM2000 82 Hex: DM Area, 0700 Hex: 2000 words (For more detail, refer to the PLC Operation Manual.)
S+1	D0 00	
S+2	00 64	Response monitoring time: 10 s
S+3	00 0B	No. of bytes of command data: 11 bytes (No. of bytes from S+4 onwards.)
S+4	28 01	EXPLICIT MESSAGE SEND command code: 28 01 Hex
S+5	02 1C	Slave node address: 2 BYTE DATA READ response service code: 1C Hex
S+6	00 2F	Class ID: 002F Hex

Word	Contents (Hex)	Meaning
S+7	00 01	Instance ID: For IR Area 1: 0001 Hex
S+8	0A 00	Read start address: 10 = 000A Hex Address L: 0A Hex, Address H: 00 Hex
S+9	28 00	No. of bytes of read data: 40 bytes = 28 Hex (The rightmost byte is not used.)

D: Destination Information

Results are stored as shown in the following table.

Word	Contents (Hex)	Meaning
D	00 10 (0 010)	Master's Unit address: 0, No. of words of command data: 10 words (specified in BCD) (No. of words from S onwards)

Response Storage Words

Results are stored as shown in the following table.

Word	Contents (Hex)	Meaning
DM 2000	28 01	EXPLICIT MESSAGE SEND command code: 28 01 Hex
DM 2001	00 00	Response code (0000 Hex: Normal completion)
DM 2002	00 2A	No. of received bytes (data length after DM 2003): 42 bytes
DM 2003	02 9C	Slave node address: 2 BYTE DATA READ response service code: 9C Hex
DM 2004 to DM 2023	HH LL...	Data read from the Slave's IR 010 to IR 029. When the BYTE DATA READ command is used from an OMRON Master, data is stored in the Master in the same sequence as the Slave; leftmost byte to rightmost byte.

Using the IOWR Instruction (C200HX/HG/HE PLCs) to Write Data

In the following example, the IOWR instruction is used to write data to words IR 010 to IR 029 (20 words) on the Slave Unit, from the Master (C200HX/HG/HE PLCs). For more detailed information on explicit messages, refer to the *DeviceNet Master Unit Operation Manual* or for information on the IOWR instruction, refer to the *SYSMAC C200HX/HG/HE PLCs Operation Manual*.

Example Conditions

Master node address: 63
Master's Unit address: 0
Slave node address: 2

Example: Using IOWR

```
[IOWR  C  S  D]
```

C: Control Words (C: First Control Word)

Word	Contents (Hex)	Meaning
C	3F FE	Master's node address: 63 Master's Unit address: FE Hex

Source Words (S: First Source Word)

Word	Contents (Hex)	Meaning
S	82 07	Response storage words: DM2000 82 Hex: DM Area, 0700 Hex: 2000 words (For more detail, refer to the PLC Operation Manual.)
S+1	D0 00	
S+2	00 64	Response monitoring time: 10 s
S+3	00 32	No. of bytes of command data: 50 bytes (No. of bytes from S+4 onwards.)
S+4	28 01	EXPLICIT MESSAGE SEND command code: 28 01 Hex
S+5	02 1E	Slave node address: 2 BYTE DATA WRITE response service code: 1E Hex
S+6	00 2F	Class ID: 002F Hex
S+7	00 01	Instance ID: For IR Area 1: 0001 Hex
S+8	0A 00	Write start address: 10 = 000A Hex Address L: 0A Hex, Address H: 00 Hex
S+9	HH LL	Data written to the Slave's IR10 to IR29. When the BYTE DATA WRITE command is used from an OMRON Master, data is written to the Slave in the same sequence it is stored in the Master; leftmost byte to right-most byte.
to	to	
S_28	HH LL	

D: Destination Information

Results are stored as shown in the following table.

Word	Contents (Hex)	Meaning
D	00 29 (0 029)	Master's Unit address: 0, No. of words of command data: 29 words (specified in BCD) (No. of words from S onwards)

Response Storage Words

Results are stored as shown in the following table.

Word	Contents (Hex)	Meaning
DM2000	28 01	EXPLICIT MESSAGE SEND command code: 28 01 Hex
DM2001	00 00	Response code (0000 Hex: Normal completion)
DM2002	00 02	No. of received bytes (data length after DM2003): 2 bytes
DM2003	02 9E	Slave node address: 2 BYTE DATA READ response service code: 9E Hex

6-1-10 Dimensions

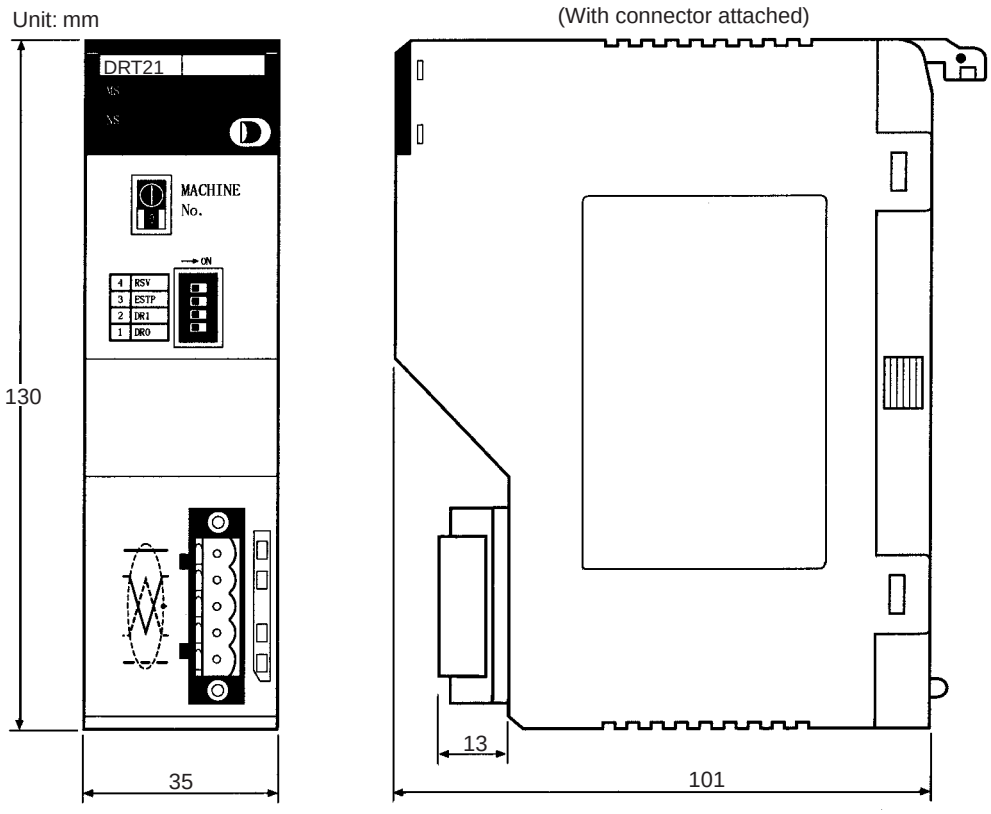

For dimensions of the Unit when mounted to a Backplane, refer to the *SYSMAC C200HX/HG/HE PLC Operation Manual* or the *SYSMAC CS1G/H PLC Operation Manual*.

6-1-11 Installing in a Control Panel

The C200H I/O Link Unit must be mounted in the Backplane of a CS1H/G or C200HX/HG/HE PLC. The Unit mounts in the Backplane just like standard Units. Refer to the PLC's *Operation Manual* or *Installation Guide* for details on mounting the Unit in the Backplane and installing the PLC in a control panel.

Note The C200H I/O Link Unit uses work words in the PLC (CS1H/G or C200HX/HG/HE) to exchange I/O data with the Master, so it isn't necessary to wire an internal power supply, I/O power supply, or I/O lines.

6-1-12 C200H I/O Link Unit Application Examples

This section explains the procedure for using explicit messages with a C200H I/O Link Unit. The following system configuration example is used in this example. When explicit messages are used with a C200H I/O Link Unit, the areas in the Slave's PLC can be read or written.

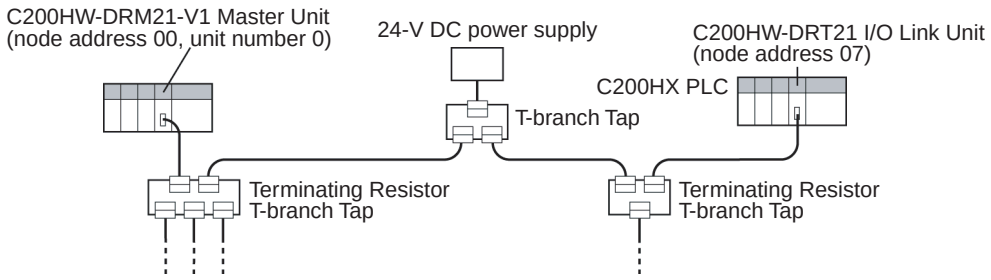

Reading Data from a Slave

With the following program, 10 words (20 bytes) of data is read from DM 1000 of the Slave (PLC to which C200H I/O Link Unit is mounted) when IR 00000 turns ON in the CPU Unit of the Master Unit. The data that is read is stored in the response storage words DM 0104 to DM 0113.

Ladder Program

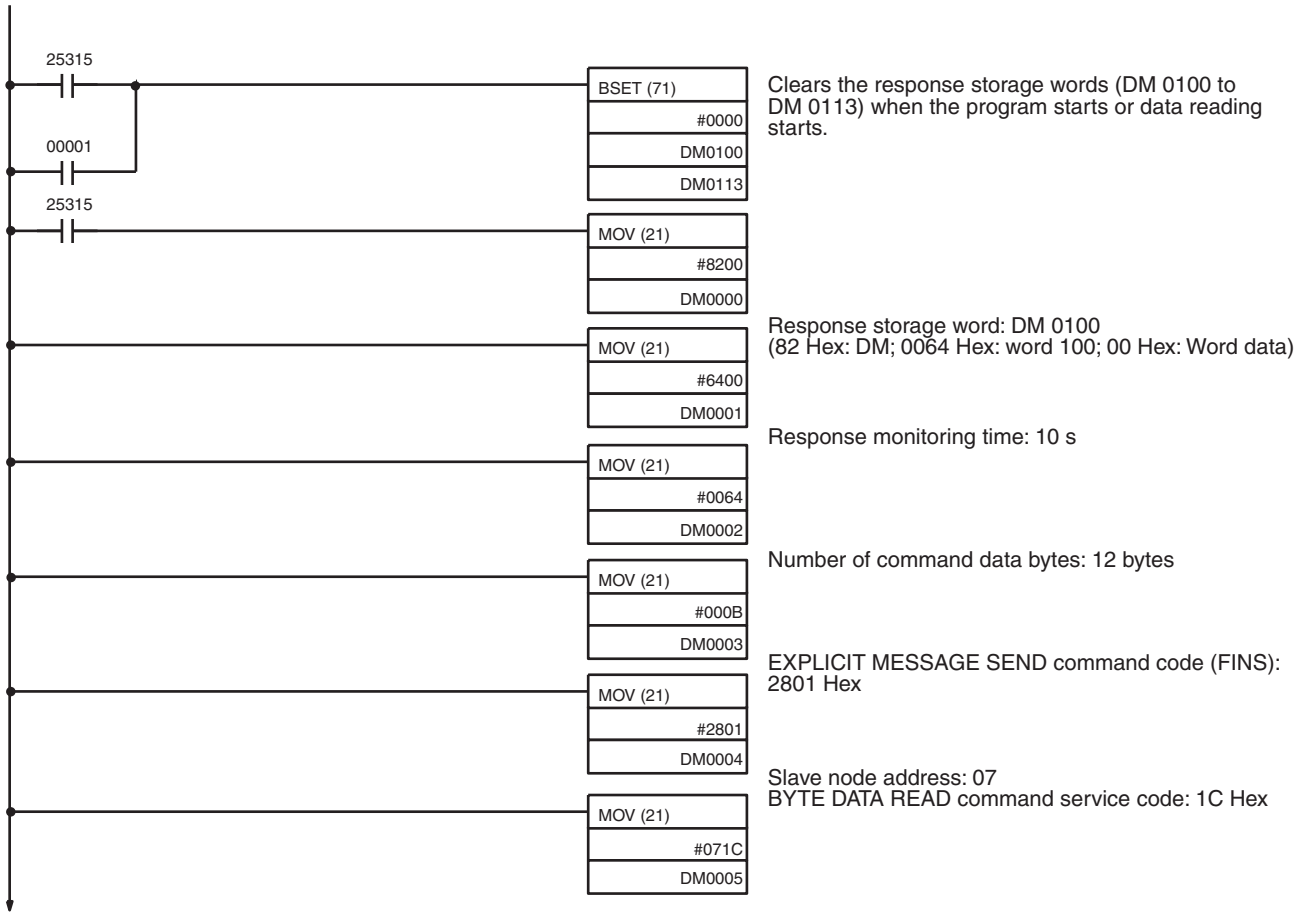

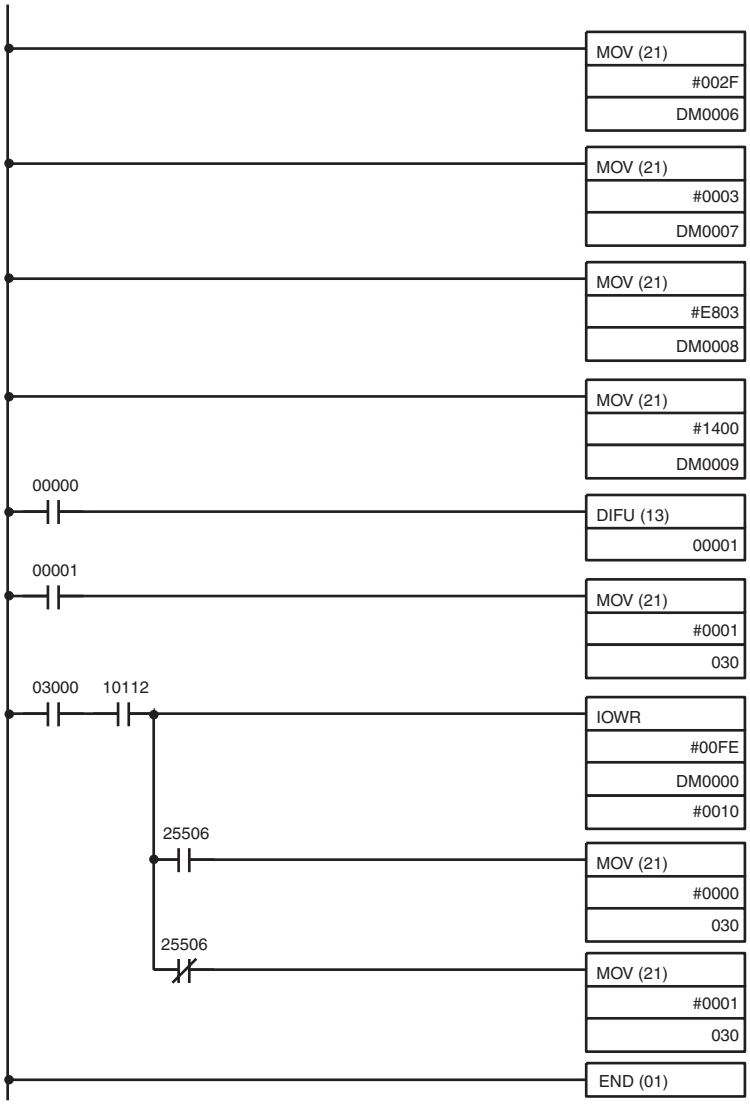

Class ID: 2F Hex

Instance ID: DM Area (03 Hex)

First read address: 03E8 Hex (word 1000)

Number of bytes read: 20 bytes (10 words)

When IR 00000 turns ON, IR 00001 will turn ON for one cycle (as a differentiated bit).

When differentiated bit IR 00001 turns ON, the sequential processing control bit IR 03000 will turn ON.

When IR 03000 turns ON, the CPU Unit will check that IR 10112 (Unit number 0 Master's Message Communications Execution Enabled Flag) is ON, and message transmission will start.

00FE: Master's node address 00, Master's unit address FE Hex

DM 0000: Command data storage words

0010 Hex: Master's unit number 00, 10 command data words (BCD)

If the Equals Flag is ON (writing to the Master has been completed normally), IR 03000 will be cleared (message transmission completed).

If the Equals Flag is OFF (error in writing to the Master), IR 03000 will be turned ON, and the data will be transmitted again.

Note When transmitting explicit messages from an OMRON Master Unit, specify 2 bytes each for the Class ID and the Instance ID.

Response

When data is read properly, the response will be stored as shown in the following table.

Words	Contents (Hex)	Meaning
DM 0100	28 01	EXPLICIT MESSAGE SEND command code is 28 01 Hex.
DM 0101	00 00	Response code is 0000 Hex (normal completion).
DM 0102	00 16	Number of bytes received (data length from word DM 0103 onwards) is 22 bytes.
DM 0103	07 9C	Slave node address is 07. BYTE DATA READ response service code is 9C Hex.
DM 0104	xx xx	Data read from word DM 1000 of Slave.
to	to	---
DM 0113	xx xx	Data read from word DM 1009 of Slave.

Writing Data to Slave

With the following example, DM 0009 to DM 0018 in the Master's CPU Unit are written to IR 000 to IR 009 (20 bytes) in the Slave (CPU Unit to which C200H I/O Link Unit is mounted) when IR 00002 turns ON in the CPU Unit of the Master Unit. Before IR 00002 turns ON at the Master Unit, make sure that the data to be written to the Slave is stored in DM 0009 to DM 0018.

Ladder Program

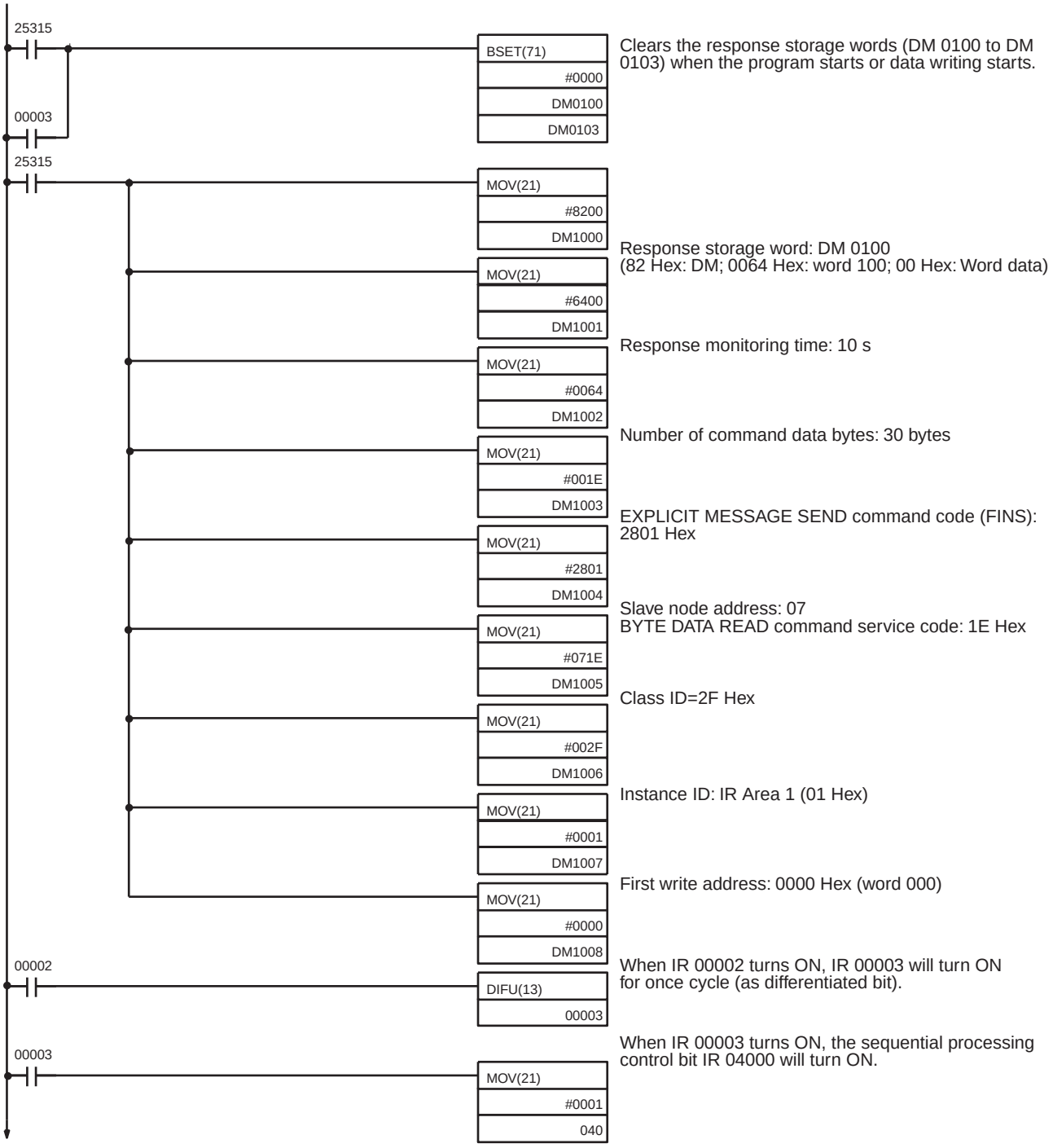

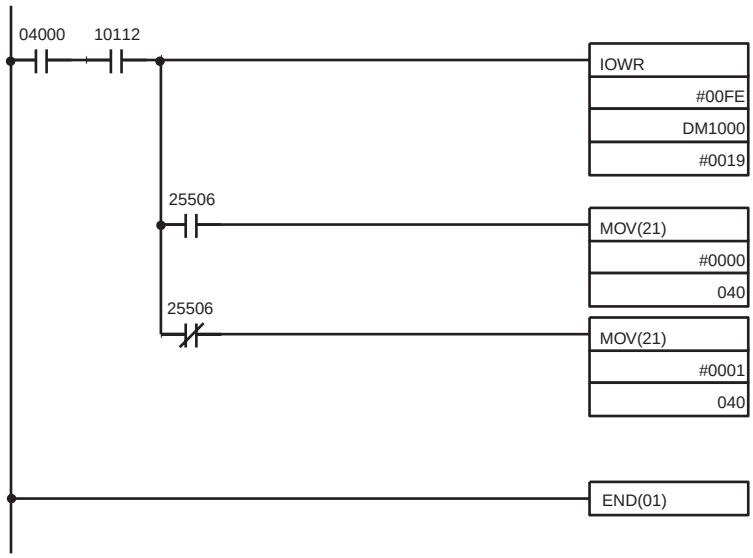

When IR 04000 turns ON, the CPU Unit will check that IR 10112 (Unit number 0 Master's Message Communications Execution Enabled Flag) is ON, and message transmission will start.

00FE: Master's node address 00, Master's unit address FE Hex

DM 1000: Command data storage words

0019 Hex: Master's unit number 00, 19 command data words (BCD)

If the Equals Flag is ON (writing to the Master has been completed normally), IR 04000 will be cleared (message transmission completed).

If the Equals Flag is OFF (error in writing to the Master), IR 04000 will be turned ON, and the data will be transmitted again.

Note When transmitting explicit messages from an OMRON Master Unit, specify 2 bytes each for the Class ID and the Instance ID.

Response

When data is written properly, the response will be stored as shown in the following table.

Words	Contents (Hex)	Meaning
DM 0100	28 01	EXPLICIT MESSAGE SEND command code is 28 01 Hex.
DM 0101	00 00	Response code is 0000 Hex (normal completion).
DM 0102	00 02	Number of bytes received (data length from word DM 0103 onwards) is 2 bytes.
DM 0103	07 9E	Slave node address is 07. BYTE DATA READ response service code is 9E Hex.

6-2 RS-232C Units

The RS-232C Unit is a Special I/O Unit that uses the DeviceNet Network to exchange I/O between the Master Unit and an RS-232C port. Explicit messages are used to set the Unit and perform I/O. There are two RS-232C ports which can be used separately with the RS-232C Unit.

6-2-1 Communications Cable Connections

Wire communications cables to the RS-232C Unit using the standard Square Connectors, just like General-purpose Slaves. This section does not explain how to connect communications cables. For details on connecting the cables, refer to *4-2 Connecting Communications Cables to General-purpose Slaves*.

6-2-2 Node Address and Baud Rate Settings

This section describes the Slaves' node address setting and baud rate setting. These settings are made using the following pins on the DIP switch.

Node address setting: Pins 1 through 6
Baud rate setting: Pins 7 and 8

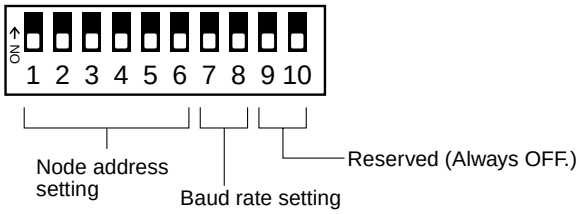

Node Address Settings

Each Slave's node address is set with pins 1 through 6 of the Slave's DIP switch. Any node address within the setting range can be used as long as it isn't already set on another node.

DIP switch setting						Node address
Pin 6	Pin 5	Pin 4	Pin 3	Pin 2	Pin 1	
0	0	0	0	0	0	0 (default)
0	0	0	0	0	1	1
0	0	0	0	1	0	2
			⋮			⋮
1	1	1	1	0	1	61
1	1	1	1	1	0	62
1	1	1	1	1	1	63

Note

1. Refer to *Appendix A Node Address Settings Table* for a complete table of DIP switch settings.
2. The Slave won't be able to participate in communications if the same node address is used for the Master or another Slave node (node address duplication error).

Baud Rate Setting

Pins 7 and 8 are used to set the baud rate as shown in the following table. (These pins are factory-set to OFF.)

Pin settings		Baud rate
Pin 7	Pin 8	
OFF	OFF	125 kbps (factory setting)
ON	OFF	250 kbps
OFF	ON	500 kbps
ON	ON	Not allowed.

Note

1. Always turn OFF the Slave's power supply (including the communications power supply) before changing the baud rate setting.
2. Set the same baud rate on all of the nodes (Master and Slaves) in the Network. Any Slaves with baud rates different from the Master's rate won't be able to participate in communications, and may cause communications errors to occur between nodes with correct baud rate settings.

6-2-3 Specifications

General Specifications

Item	Specification
Models	DRT1-232C2
Input points	Inputs: 2 ports max. (One word is used in the IN Area to detect the communications status.)
Communications power supply voltage	11 to 25 V DC (Supplied from the communications connector.)
Internal power supply voltage	20.4 to 26.4 V DC (24 V DC, –15 to +10%)
Current consumption	Communications: 50 mA max. Internal circuits: 100 mA max.
Noise immunity	Internal power supply normal: ±600 V Internal power supply common: ±1.5 kV Pulse width: 0.1 to 1 µs Pulse rise time: 1 ns (via noise simulator)
Vibration resistance	10 to 150 Hz, 1.0-mm double amplitude or 69 m/s^2
Shock resistance	200 m/s^2
Dielectric strength	500 V AC, 50/60 Hz for 1 min, leakage current: 1 mA max. (between DC power supply and FG)
Insulation resistance	20 MΩ min. at 100 V DC (between DC power supply and FG)
Ambient temperature	–10 to 55°C
Ambient humidity	25% to 85% (with no condensation)
Operating atmosphere	No corrosive gases
Storage temperature	–25 to 65°C
Mounting	M4 screw mounting or DIN 35-mm track mounting
Mounting strength	100 N Track direction: 10 N
Terminal strength	100 N
Weight	250 g max.

RS-232C Communications Specifications

Item	Specification
Communications method	All dual communications, Start-stop synchronization
Baud rate	19,200/9,600/4,800/2,400/1,200 bps
Transmission code	ASCII (7-bit), JIS (8-bit)
Parity	Even, odd, none
No. of stop bits	1 or 2 bits
RS-232C ports	2 ports
Connectors	D-sub 9-pin connector for 2 ports
Transmission memory capacity	1,024 bytes for 2 ports
Frame length	1,024 bytes max. (FIFO)
Header code	Enable/disable (Header code: 1 byte when enabled.)
Delimiter code	Enable/disable (Delimiter code: 1 byte when enabled.)

Item	Specification
Flow control	Enable/Disable (RS/CS control only) Flow Control Enabled The RS (Request Send) signal is normally ON, but it turns OFF when the receive buffer reaches 75% of capacity. CS is always checked. Flow Control Disabled The RS (Request Send) signal is always ON. The Receive Buffer Overflow Flag turns ON if the receive buffer overflows. CS is always checked. Note: The CS signal is always checked. Data will not be output if CS is not connected. Short-circuit the RS-CS signals when they are not used.
Transmission distance	15 m max.

6-2-4 Components

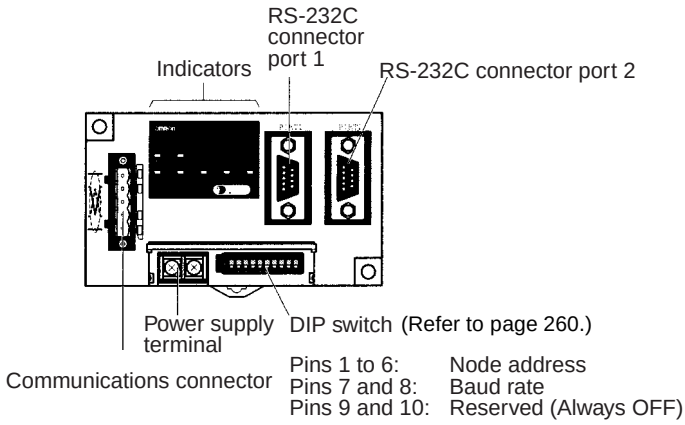

Indicators

The indicators display the status of the RS-232C Unit and the network.

Indicator	Color	Status		Meaning
MS (Module status)	Green	ON	Normal	The Unit is operating normally.
		Flashing	Settings incomplete	Settings are being read.
	Red	ON	Fatal error	A fatal error (hardware error) has occurred.
		Flashing	Non-fatal error	A non-fatal error, such as a switch setting error, has occurred.
	---	OFF	No power supply	Unit error, power is not being supplied, the Unit is being reset, or waiting for initial processing to start.

Indicator	Color	Status		Meaning
NS (Network status)	Green	ON	Online/communications connection established	Normal Network status (Communications connection established.)
		Flashing	Offline/communications connection not yet established	The Network is normal, but the communications connection is not established.
	Red	ON	Fatal communications error	A fatal communications error has occurred. Network communications are not possible. Check for a node address duplication or Bus Off error.
		Flashing	Non-fatal communications error	A communications error with the Master Unit has occurred.
	---	OFF	Offline/ power OFF	The power supply to the Master Unit is not ON, etc.
ERR	Red	ON	Unit error	Unit hardware error.
		OFF	Normal	Unit hardware is normal.
RD1	Orange	ON	Port 1 receiving	Data is being received at RS-232C port 1.
		OFF	Port 1 not receiving	No data is being received at RS-232C port 1.
SD1	Orange	ON	Port 1 transmitting	Data is being transmitted from RS-232C port 1.
		OFF	Port 1 not transmitting	No data is being transmitted from RS-232C port 1.
RD2	Orange	ON	Port 2 receiving	Data is being received at RS-232C port 2.
		OFF	Port 2 not receiving	No data is being received at RS-232C port 2.
SD2	Orange	ON	Port 2 transmitting	Data is being transmitted from RS-232C port 2.
		OFF	Port 2 not transmitting	No data is being transmitted from RS-232C port 2.

6-2-5 Word Allocations for Communications Status

The RS-232C Unit is allocated one word (16 points) in the IN Area of the Master Unit. This word is configured as illustrated in the following diagram, and is used to communicate the communications status of RS-232C ports 1 and 2 to the Master Unit.

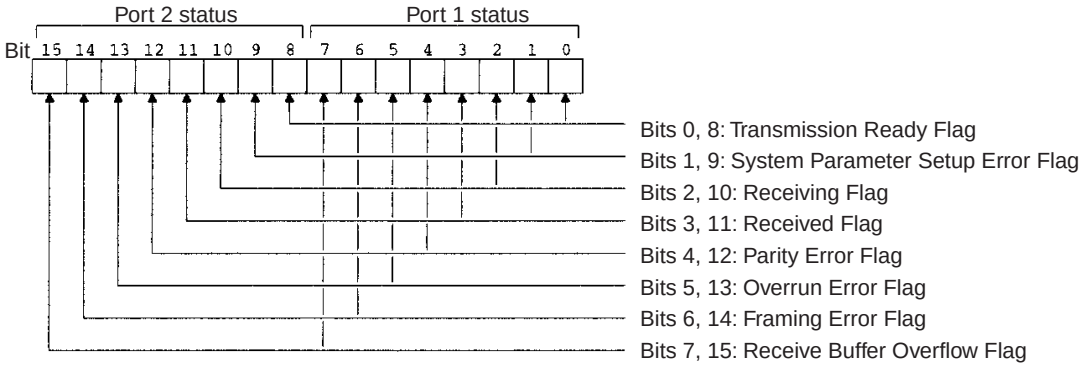

Bit		Name	Function
0	8	Transmission Ready Flag	0: Transmitting data 1: Transmission enabled (no data transmitted) When writing data to other ports (SEND command), check to make sure this bit is 1 (ON) before starting.
1	9	PLC Setup Error Flag	0: System parameter setup normal 1: System parameter setup error
2	10	Receiving Flag	0: No data is being received 1: Data is being received
3	11	Received Flag	0: No data in the reception buffer 1: Data in the reception buffer When reading data from other ports (RECEIVE READ DATA command), check to make sure this bit is 1 (ON) before starting.
4	12	Parity Error Flag	0: No parity error 1: Parity error When a parity error occurs, make sure that the parity setting for the RS-232C Unit and the RS-232C device are the same.
5	13	Overrun Error Flag	0: No overrun error 1: Overrun error When an overrun error occurs, make sure that the baud rate setting for the RS-232C Unit and the RS-232C device are the same.
6	14	Framing Error Flag	0: No framing error 1: Framing error When a framing error occurs, make sure that the character format setting (data length, parity, No. of stop bits) for the RS-232C Unit and the RS-232C device are the same.
7	15	Receive Buffer Overflow Flag	0: No overflow in the reception buffer 1: Reception buffer overflow (Not possible to read receive data) When the reception buffer overflows it is necessary to either reset or restart the RS-232C Unit, or reset (initialize) the RS-232C port at which the overflow occurred.

6-2-6 Using the RS-232C Unit

The RS-232C Unit is set and controlled using explicit DeviceNet messages or the DeviceNet Configurator. When the default communications settings for the RS-232C port are not used, the settings must be changed using explicit messages or the DeviceNet Configurator.

Making Settings with Explicit Messages

The general operating procedure for the RS-232C Unit is as follows:

1,2,3...

1. Turn ON the power to the Master Unit and all Slaves, including the RS-232C Unit.
2. When necessary, explicit messages can be sent from the Master to set the parameters of the RS-232C ports 1 and 2 on the RS-232C Unit.

   Note a) Communications setting do not become effective even after the explicit message has been completed normally. For the settings to be effective, the RS-232C port must be reset using the PORT RESET command, or by restarting the RS-232C Unit. The previous settings will be in effect until the new settings are enabled.

   b) The communications settings are held internally by the RS-232C Unit, so once they have been set, they will not change when the Unit is turned OFF or reset, and once set, it is not necessary to set the parameters again, unless there are changes to be made.
3. Register the RS-232C Unit in the Master's scan list. There are two methods of registering on the scan list.
   - Turn ON the Enable Scan List software switch on the Master Unit.
   - Create a scan list and registering the Unit using a DeviceNet Configurator.

For further details on Master Unit operations, refer to the *DeviceNet Master Unit Operation Manual* or the *DeviceNet Configurator Operation Manual*.

4. When necessary, explicit messages can be sent from the Master to control the flow of data through the RS-232C ports 1 and 2 on the RS-232C Unit.

   Note a) When sending or receiving data through ports 1 and 2, it is necessary to check the status word allocated to the RS-232C Unit for communications status in the Master's IN Area.

   b) Ports 1 and 2 can send and receive data independently but because the RS-232C Unit itself can only process one explicit message at a time, even if the SEND/RECV commands to be sent are for another port, always make sure that the previous explicit message has been processed before sending the next message.

Making Settings with the DeviceNet Configurator

The communications settings can be made using the OMRON DeviceNet Configurator (version 2.□ or later). When using a version earlier than 2.□, contact your local sales office before use. (Version information can be confirmed from the Help Menu.)

1,2,3...

1. Connect a DeviceNet Configurator to the DeviceNet Network and go online.
2. Turn ON the power to the RS-232C Unit.

3. Locate the RS-232C Unit's icon in the *Network Configuration* window and double click the icon.

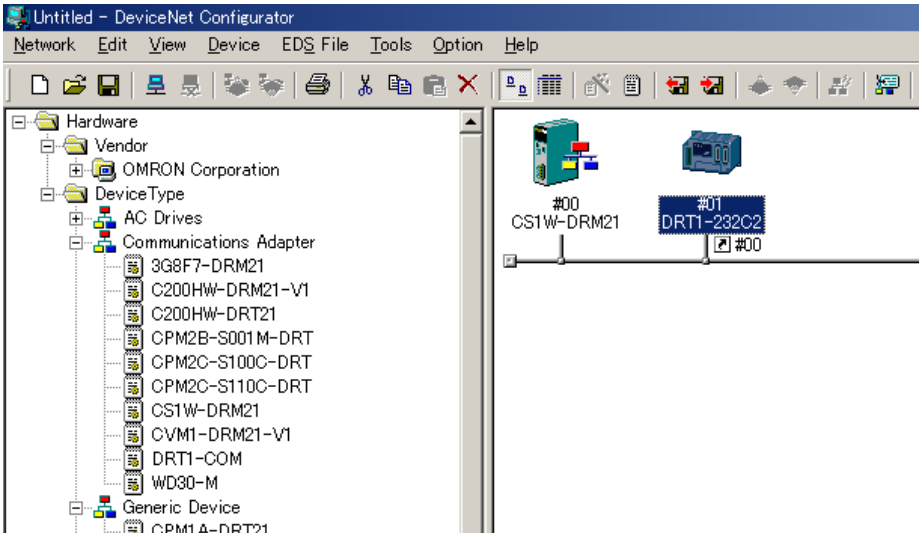

The Device Parameters Editing Window (Communications Settings parameter setting window) will be displayed.

4. Either double click on the Communications parameter that you want to change or select the desired parameter and press the **Enter** Key.

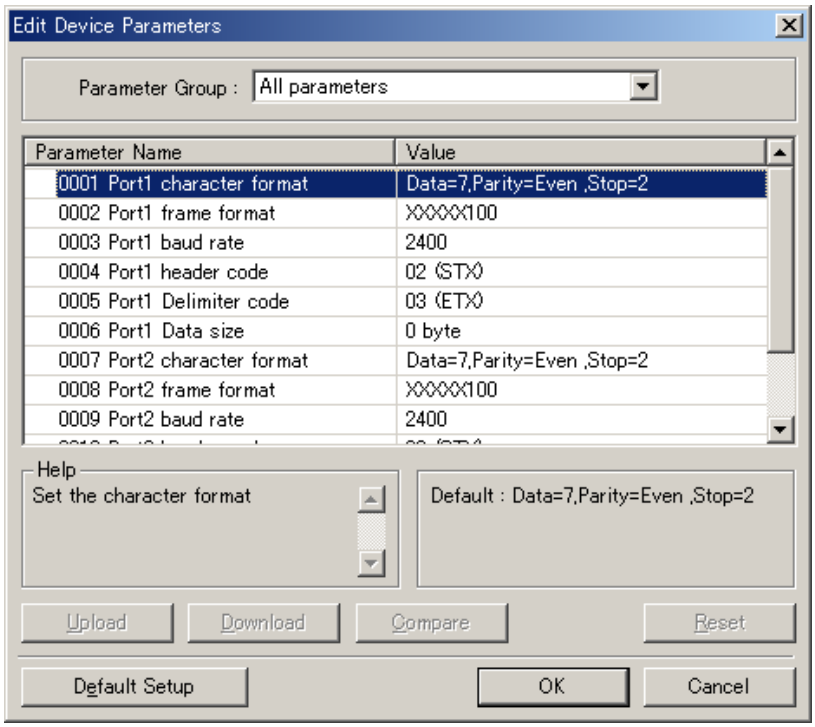

It will become possible to change the parameter.

5. Set or change parameters.
   - *frame format*

     Put check marks next to the items that you want to disable and press the **Enter** Key, or click another location in the window.

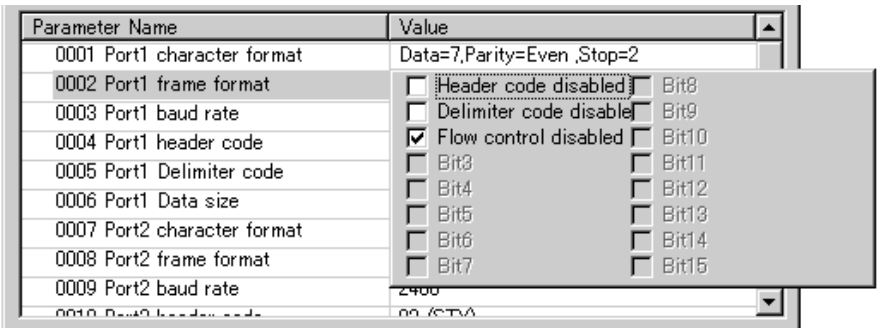

   - *Data size*

     Input the new value and press the **Enter** Key, or click another location in the window.

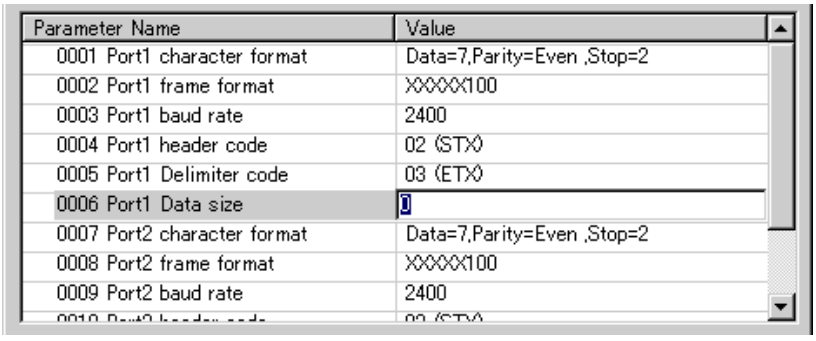

   - Settings other than *frame format* and *Data size*

     Select the desired parameter setting from the corresponding pull-down menu and press the **Enter** Key, or click another location in the window. (In this example, the *character format* is being set.)

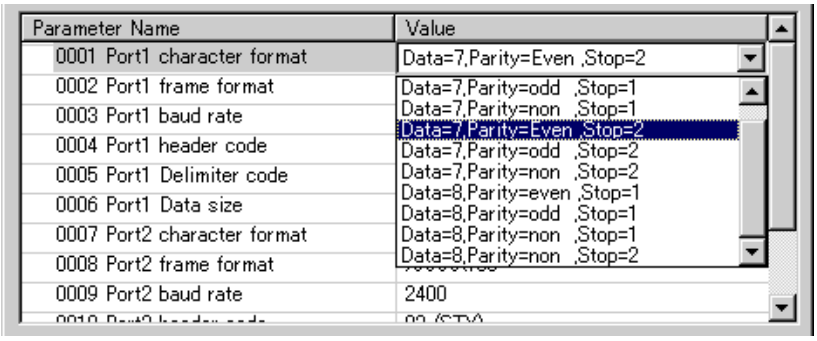

6. When the desired parameter changes and settings have been completed, click the ***Download*** Button. The edited parameters will be written to the RS-232C Unit.

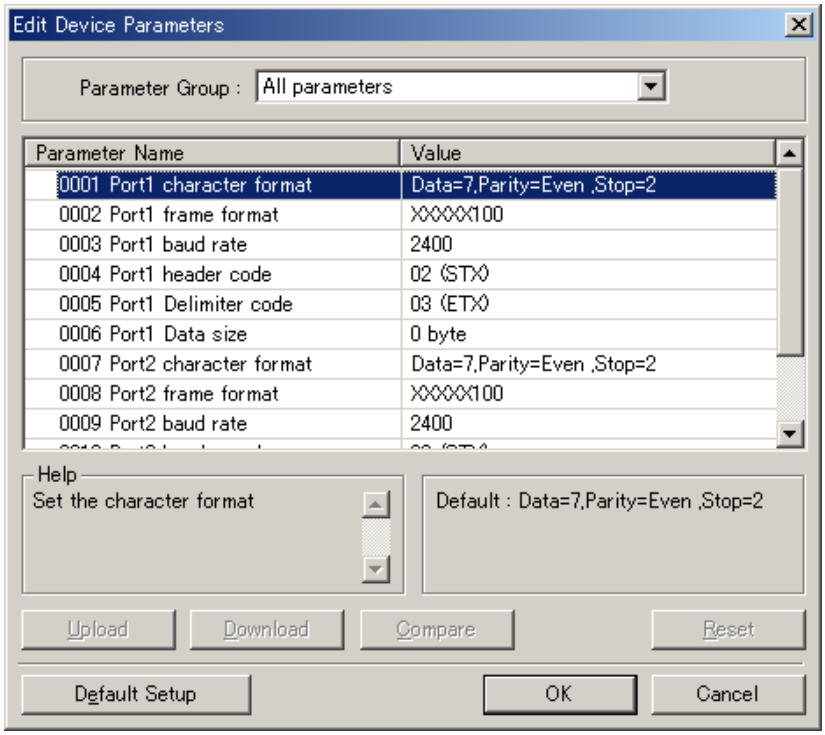

7. Click the ***Reset*** Button to enable the edited parameters.

   A reset confirmation message will be displayed. Click the ***Yes*** button to confirm.

Note

1. When exchanging data through ports 1 and 2, it is necessary to confirm the status of the data transfer (communications status) in the words allocated to the RS-232C Unit in the Master Unit's Input Area.
2. It is possible to operate ports 1 and 2 independently, but the RS-232C Unit can process only one explicit message at a time. Even if you are going execute a send command or receive command for the other port, confirm that the previous explicit message processing has been completed before executing the next explicit message.

6-2-7 Explicit DeviceNet Messages

Explicit DeviceNet messages sent from the Master Unit can be used to control the parameters of the RS-232C Unit's ports 1 and 2 and to control the flow of data.

The RS-232C Unit processes the commands received from the Master Unit and returns responses.

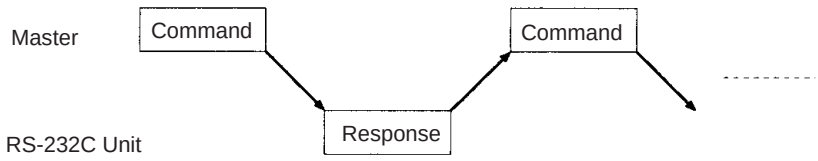

RS-232C Unit Explicit Message List

The explicit messages that can be processed by the RS-232C Unit are as listed in the following table. For the RS-232C Unit, the service code and the Instance ID determine the processing content and object. The Class ID is always 0094 Hex.

Explicit message	Function	Service code (See note)	Instance ID	Page
PARAMETER SET	Sets the parameters for an RS-232C port.	10 Hex (90 Hex)	01 Hex	272
PARAMETER READ	Reads the parameters set for an RS-232C port.	0E Hex (8E Hex)	01 Hex	275
INITIALIZE PARAMETERS	Initializes the parameters for an RS-232C port.	05 Hex (85 Hex)	01 Hex	276
RS-232C DATA SEND	Transmits data from an RS-232C port.	10 Hex (90 Hex)	Port 1: 02 Hex Port 2: 03 Hex	276
RS-232C RECEIVE DATA READ	Reads data received by an RS-232C port.	0E Hex (8E Hex)	Port 1: 02 Hex Port 2: 03 Hex	277
PORT RESET	Resets an RS-232C port.	05 Hex (85 Hex)	Port 1: 02 Hex Port 2: 03 Hex	278
Error response	When an error occurs in an explicit message (command), an error response is sent from the RS-232C Unit.	--- (94 Hex)	---	279

Note The parentheses indicate the response values.

Explicit Message Format

This section explains the common features of explicit commands and responses. Details and usage examples will only be provided however, for those explicit messages that the RS-232C Unit can process. For details on using explicit messages with a Master Unit, refer to the *DeviceNet Operation Manual*.

The number of bytes designated for Class ID, Instance ID, and Attribute ID differ depending on the Master. When sent from an OMRON DeviceNet Master, Class ID and Instance ID are 2 bytes (4 digits), and Attribute ID is 1 byte (2 digits). For an example using this case, see *6-2-8 Using Explicit DeviceNet Messages*.

Command Block

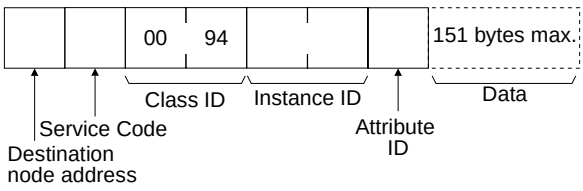

Destination Node Address

The node address of the RS-232C Unit controlled by the explicit message (command) in single-byte (2-digit) hexadecimal.

Service Code, Class ID, Instance ID, Attribute ID

The parameters for specifying command, processing object, and processing content. For the RS-232C Unit, however, Class ID is always 94 Hex. Attribute ID is not necessary for some commands. If the specified codes and ID area are outside the permitted range, an error response will be returned (08FF Hex), and the command will not be executed.

Data

Data set when necessary. A maximum of 151 bytes can be set. Some commands do not require this data.

Response Block

- The normal response block is shown below.

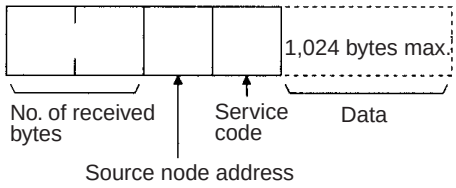

- The error response block is shown below. This response block is returned when an error occurs for an explicit message.

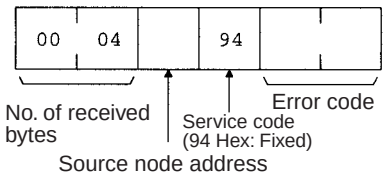

- If an explicit message fails (timeout etc.), an explicit message response will not be returned. When the command has been sent using the FINS command EXPLICIT MESSAGE SEND, only an FINS error response is returned.

No. of Received Bytes

The number of bytes received from the source node address is returned in hexadecimal. When an error response is returned for an explicit message, the number of bytes is 0004 Hex.

Source Node Address

The node address of the node from which the command was sent is returned in hexadecimal.

Service Code

For normal completion, the value when leftmost bit of the service code specified by the command is ON is stored as shown in the table below.

Command service code	Response service code
10 Hex	90 Hex
0E Hex	8E Hex
05 Hex	85 Hex

When an error response is returned for an explicit message, the value is 94 Hex.

Data

Data read when the PARAMETER EAD or RS-232C RECEIVE DATA READ commands are used. The maximum number of bytes is 1,024. Only a maximum of 152 bytes can be read using an OMRON DeviceNet Master. Be sure not to exceed the maximum of 152 bytes.

Error Code

The explicit message error code. For details see *Error Response* on page 279.

PARAMETER SET

Sets the parameters for the specified RS-232C port.

Command Block

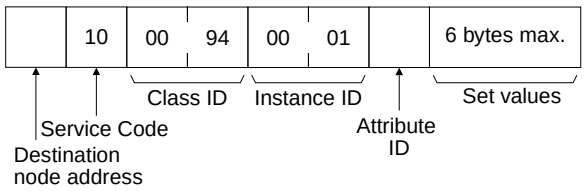

Response Block

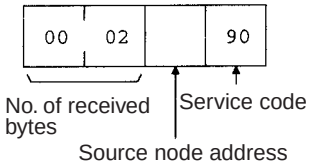

Parameters

Attribute ID, Set Values (Command)

The parameters and set values are set as shown in the following table.

Port	Parameters	Attribute ID	Set values	Initial values
Port 1	Set all parameters	64 Hex	ALL PARAMETER SET (See below)	Initial values for each parameter
	Data bit length, parity, No. of stop bits	65 Hex	Specify the appropriate set values from the parameters in the table, as single-byte (2-digit) hexadecimal. (See note.)	Data bit length: 7 bits Parity: Even No. of stop bits: 2 bits
	Header code enable/disable, delimiter code enable/disable, flow control enable/disable	66 Hex	Specify bit data in single-byte (2-digit) hexadecimal, as shown in the following diagram. 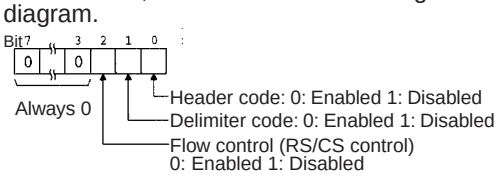 	Header code and delimiter code enabled, flow control disabled
	Baud rate	67 Hex	Specified in single-byte (2-digit) hexadecimal as follows: 00 Hex: 1,200 bps 01 Hex: 2,400 bps 02 Hex: 4,800 bps 03 Hex: 9,600 bps 04 Hex: 19,200 bps 05 to 07 Hex: Not allowed	2,400 bps
	Header code (only when header code is enabled)	68 Hex	Specifies the header code in single-byte (2-digit) hexadecimal.	02 Hex (STX code)
	Delimiter code (only when delimiter code is enabled)	69 Hex	Specifies the delimiter code in single-byte (2-digit) hexadecimal.	03 Hex (ETX code)
	No. of bytes received after the delimiter (when the delimiter code is enabled) or the No. of bytes received per frame (when the delimiter code is disabled).	6A hex	Specifies the number of bytes in single-byte (2-digit) hexadecimal.	00 Hex

Port	Parameters	Attribute ID	Set values	Initial values
Port 2	Set all parameters	6B Hex	ALL PARAMETER SET (See below)	Initial values for each parameter
	Data bit length, parity, No. of stop bits	6C Hex	Specify the appropriate set values from the parameters in the table, as single-byte (2-digit) hexadecimal). (See note.)	Data bit length: 7 bits Parity: Even No. of stop bits: 2 bits
	Header code enable/disable, delimiter code enable/disable, flow control enable/disable	6D Hex	Specify bit data in single-byte (2-digit) hexadecimal, as shown in the following diagram. 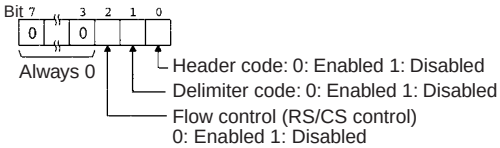 	Header code and delimiter code enabled, flow control disabled
	Baud rate	6E Hex	Specified in single-byte (2-digit) hexadecimal as follows: 00 Hex: 1,200 bps 01 Hex: 2,400 bps 02 Hex: 4,800 bps 03 Hex: 9,600 bps 04 Hex: 19,200 bps 05 to 07 Hex: Not allowed	2,400 bps
	Header code (only when header code is enabled)	6F Hex	Specifies the header code in single-byte (2-digit) hexadecimal.	02 Hex (STX code)
	Delimiter code (only when delimiter code is enabled)	70 Hex	Specifies the delimiter code in single-byte (2-digit) hexadecimal.	03 Hex (ETX code)
	No. of bytes received after the delimiter (when the delimiter code is enabled) or the No. of bytes received per frame (when the delimiter code is disabled).	71 hex	Specifies the number of bytes in single-byte (2-digit) hexadecimal.	00 Hex

Note Port 1 and 2 parameter settings for data bit length, parity, and No. of stop bits:

Set value	Data bit length	Parity	No. of stop bits
00 Hex	7	Even	1
01 Hex	7	Odd	1
02 Hex	7	None	1
03 Hex	7	Even	2
04 Hex	7	Odd	2
05 Hex	7	None	2
06 Hex	8	Even	1
07 Hex	8	Odd	1
08 Hex	8	None	1
09 Hex	8	None	2
0A Hex to 0F Hex	7	Even	2

ALL PARAMETER SET

Writes all the Attribute ID set values to consecutive words, and transmits all the settings at the same time, as shown in the following diagram.

	15 … 8	7 … 0 (Bit)
First word	Attribute code 64 Hex (6 B Hex)	Data bit length 65 Hex (6C Hex)
First word +1	Header code enable/disable 66 Hex (6D Hex)	Baud rate 67 Hex (6E Hex)
First word +2	Header code 68 Hex (6F Hex)	Delimiter code 69 Hex (70 Hex)
First word +3	No. of bytes received after the delimiter /per frame 6A Hex (71 Hex)	00 Hex: Fixed

Note The hexadecimal values displayed above are the set values for Attribute ID.
The values in parentheses are the Attribute ID values for port 2

- The new set values will become effective if the PORT RESET command is sent or the RS-232C Unit is restarted after the command is completely normally.

PARAMETER READ

Reads the parameters set for the RS-232C port. If the PARAMETER SET command has not been sent, or the RS-232C Unit has not been reset, this command will read the previously set parameters, not the new settings. (The RS-232C port will also operate according to the previous settings.)

Command Block

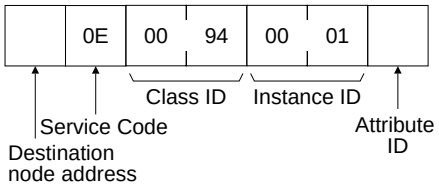

Response Block

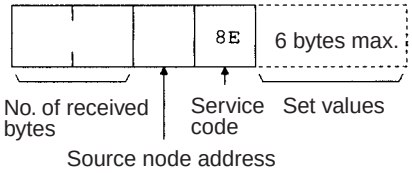

Parameters

Attribute ID (Command)

Specifies the Attribute ID for reading the set values. For details on what to specify, see PARAMETER SET on page 272. It is also possible to specify all parameters at once (Port 1: 64 Hex, Port 2: 6B Hex).

Set Values (Response)

Reads the values that are set in Attribute ID and stores them. For details on the meaning of the stored values, see PARAMETER SET on page 272.

INITIALIZE PARAMETERS

Initializes the parameters for the RS-232C Unit.

Command Block

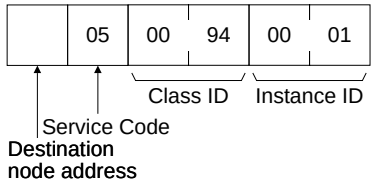

Response Block

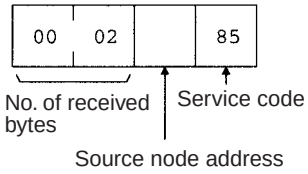

Initializes all parameters set for the RS-232C Unit and returns the initial values.

RS-232C DATA SEND

Transmits data to the RS-232C Unit from the specified port.

Command Block

Response Block

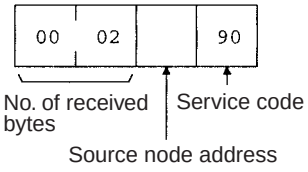

Parameters

Instance ID (Command)

Specifies the port to which the data is being sent, in hexadecimal as follows:
02 Hex: Port 1
03 Hex: Port 2

Send Data (Command)

Specifies the data to be sent from the specified port. Word data is sent from the leftmost bits to the rightmost bits as shown in the following diagram.

	15 ... 8	7 ... 0 Bit
First word	(1)	(2)
First word +1	(3)	(4)
First word +2	(5)	(6)

Note 1. When an odd number of bytes of data are sent, the last data will be set in the last word of the leftmost bits.

2. The number of bytes of data to be sent is specified when the parameters for the CMND(194) instruction (CV-series PLCs) or the IOWR instruction (C200HX/HG/HE PLCs) are set (No. of bytes of command data). It is not necessary to set this parameter for explicit messages.
3. Before using this command, be sure that the communications status Transmission Ready Flag (Port 1: bit 00, Port 2: bit 08), allocated in the Master's IN Area is ON (transmission enabled). If the command is executed while the Flag is OFF (transmitting data), and error will occur (error code 02FF Hex).

RS-232C RECEIVE DATA READ

Receives data from the specified RS-232C Unit port, and reads the data stored in the reception buffer. Depending on whether or not the header code and delimiter code are enabled or disabled, the data read is treated as shown in the following table. (When the delimiter header is disabled, the number of bytes set in No. of bytes per frame is read.)

Header code	Delimiter code	Data read
Disabled	Disabled	The "No. of bytes per frame" is read from the RS-232C Unit's reception buffer, starting with the first word. 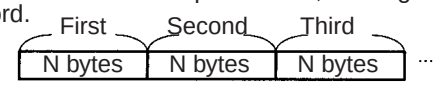
Disabled	Enabled	Data from the RS-232C Unit's reception buffer is read, from the first word to the delimiter code. (There is no limit to the amount of data read.) 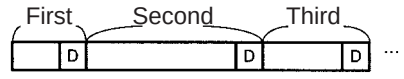
Enabled	Disabled	Data from the RS-232C Unit's reception buffer is read, from the header code to the "No. of bytes per frame." In this case, the data before the header code is discarded 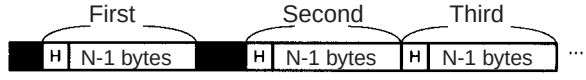
Enabled	Enabled	Data from the RS-232C Unit's reception buffer is read, from the header code to the delimiter code. (There is no limit to the amount of data read.) In this case, the data before the header code is discarded. 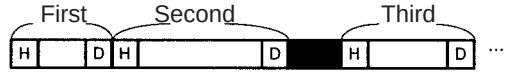

Note H: Header code, D: Delimiter code, N: No. of bytes per frame, Shaded area: trashed data.

The above explanation is very brief, but if the number. of bytes received after the delimiter code is set, data after the delimiter code can also be read.

Command Block

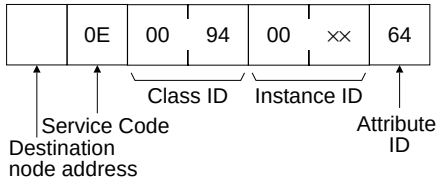

Response Block

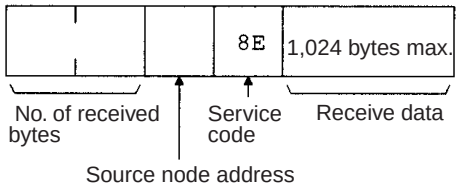

Parameters

Instance ID (Command)

Specifies the port that reads the reception buffer data in hexadecimal as follows:

02 Hex: Port 1
03 Hex: Port 2

Receive Data (Response)

Stores the data read from the specified port's reception buffer. The data is stored in words from the leftmost byte to the rightmost byte as shown in the following diagram.

Bit	15 … 8	7 … 0
First word	(1)	(2)
First word +1	(3)	(4)
First word +2	(5)	(6)

Note

1. RS-232C ports 1 and 2 of the RS-232C Unit each have a reception buffer of 1,024 bytes, and up to a maximum of 1,024 bytes of data can be read from the Master at any given time. From an OMRON DeviceNet Master however, the maximum amount of data that can be read at one time is 152 bytes. Be sure to configure the data so that the 152-byte read data limit is not exceeded.
2. When data is read from an OMRON DeviceNet Master, the number of read bytes is stored as a CMND instruction (CV-series PLCs) or IOWR instruction (C200HX/HG/HE PLCs) parameter, so it will be requested.
3. When an odd number of bytes of data are sent, the last data will be set in the leftmost bits of the last word.
4. Before using this command, be sure that the communications status Received Flag (Port 1: bit 3, Port 2: bit 11) allocated in the Master's IN Area is ON (data in the reception buffer). If the command is executed while the Flag is OFF (no data in the reception buffer), and error will occur (error code 1800 Hex).

PORT RESET

Resets the RS-232C Unit's specified port. To change the parameter settings using the PARAMETER SET command, either reset the port using the PORT RESET command or restart the RS-232C Unit.

Command Block

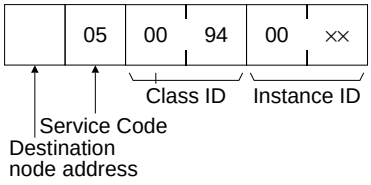

Response Block

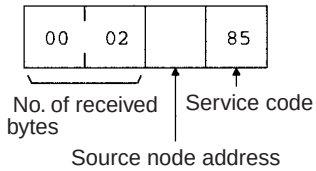

Parameters

Instance ID (Command)

Specifies the port to be reset, in hexadecimal as follows:
02 Hex: Port 1
03 Hex: Port 2

Note

1. When the port is reset, the transmission buffer and the reception buffers are cleared and the port's status is initialized. The parameter settings, however, are maintained.
2. When an error occurs at a port, find the cause of the error and then use this command to reset the port.

Error Response

If there is an error in the explicit command, the RS-232C Unit will return an error response as illustrated below.

Response Block

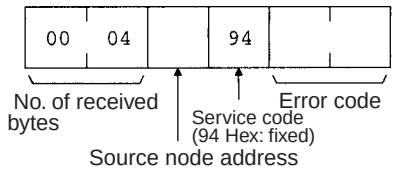

Parameters

No. of Received Bytes (Response)

Always 0004 Hex.

Source Node Address (Response)

The node address of the node that sent the command is returned in hexadecimal.

Error Code (Response)

The error code is returned in double-byte (4-digit) hexadecimal, as shown in the following table.

Error code	Error details	Appropriate command
02FF Hex	The RS-232C port is transmitting data and therefore busy.	RS-232C DATA SEND
08FF Hex	The service code, Class ID, and Instance ID are not supported.	All commands
09FF Hex	Data formatting error.	PARAMETER SET RS-232C DATA SEND
1800 Hex	There is no receive data at the RS-232C port. There is a parameter setting error between RS-232C devices.	RS-232C RECEIVE DATA READ

Error code	Error details	Appropriate command
1801 Hex	An error frame was received from a RS-232C device.	RS-232C RECEIVE DATA READ
19FF Hex	Write not possible due to a hardware error etc.	PARAMETER SET

6-2-8 Using Explicit DeviceNet Messages

Using CMND to Change Settings (CS-series and CV-series)

The following example shows how to use the CMND instruction to change all the parameters of port 1 of the RS-232C Unit at once from the Master Unit in a CS-series or CV-series PLC.

Note If a CS-series PLC is being used, this example is applicable only when a CS-series Master Unit is mounted. Use the IOWR instruction when a C200HX/HG/HE or C200HS Master Unit is mounted. In this case, refer to the *DeviceNet Master Unit Operation Manual* for details on using the IOWR instruction.
For more detailed information on explicit messages, refer to the *DeviceNet Master Unit Operation Manual*. For information on the CMND instruction, refer to the PLC's *Operation Manual* or *Programming Manual*.

Example Conditions

Master node address: 27
Slave network address: 2
Slave node address: 14

Example: Using the CMND Instruction

```
[CMND  S  D  C]
```

Command Words (S: First Command Word)

Word	Contents (Hex)	Meaning
S	28 01	EXPLICIT MESSAGE SEND command code: 28 01 Hex
S+1	0E 10	Slave node address: 14 PARAMETER SET command service code: 10 Hex
S+2	00 94	Class ID: 0094 Hex
S+3	00 01	Instance ID: 0001 Hex
S+4	64 06	ALL PARAMETER SET Attribute ID: 64 Hex, (8 bits, even parity, 1 stop bit): 06 Hex
S+5	00 00	Header code, delimiter code, and flow control all enabled: 00 Hex, 1,200 bps: 00 Hex.
S+6	02 03	Header code STX: 02 Hex, Delimiter code ETX: 03 Hex.
S+7	00 00	No. of bytes after delimiter = 0 (00 Hex)

D: Response Words (D: First Response Word)
Results are stored as shown in the following table.

Word	Contents (Hex)	Meaning
D	28 01	EXPLICIT MESSAGE SEND command code: 28 01 Hex
D+1	00 00	Response code (0000 Hex: Normal completion)

Word	Contents (Hex)	Meaning
D+2	00 02	No. of received bytes (data length after D+3): 2 bytes
D+3	0E 90	Slave node address: 14 PARAMETER SET response service code: 90 Hex

Control Words (C: First Control Word)

Word	Contents (Hex)	Meaning
C	00 0F	No. of bytes of command data: S (15 bytes of command data)
C+1	00 08	No. of bytes of response data: D (8 bytes of response data)
C+2	00 02	Destination node network address: 2
C+3	1B FE	Master's node address: 27 Master's Unit address: FE Hex
C+4	00 00	Response returned, communications port No.: 0, No. of retries: 0
C+5	00 64	Response monitoring time: 10 s

Using CMND to Read Data (CS-series and CV-series)

The following example shows how to use the CMND instruction to read the RS-232C Unit's port 1 reception data from the Master Unit in a CS-series or CV-series PLC. An OMRON DeviceNet Master can read a maximum of 152 bytes of data at a time.

Note If a CS-series PLC is being used, this example is applicable only when a CS-series Master Unit is mounted. Use the IOWR instruction when a C200HX/HG/HE or C200HS Master Unit is mounted. In this case, refer to the *DeviceNet Master Unit Operation Manual* for details on using the IOWR instruction.

Before using the RS-232C RECEIVE DATA READ command, be sure that the communications status Received Flag (Port 1: bit 3, Port 2: bit 11), allocated in the Master's IN Area is ON.

For more detailed information on explicit messages, refer to the *DeviceNet Master Unit Operation Manual*. For information on the CMND instruction, refer to the PLC's *Operation Manual* or *Programming Manual*.

Example Conditions

Master node address: 27
Slave network address: 2
Slave node address: 14

Example: Using the CMND Instruction

```
[CMND  S  D  C]
```

Command Words (S: First Command Word)

Word	Contents (Hex)	Meaning
S	28 01	EXPLICIT MESSAGE SEND command code: 28 01 Hex
S+1	0E 0E	Slave node address: 14 RS-232C RECEIVE DATA READ command service code: 0E Hex
S+2	00 94	Class ID: 0094 Hex
S+3	00 02	Instance ID: Port 1 = 0002 Hex
S+4	64 00	Attribute ID: 64 Hex

D: Response Words (D: First Response Word)
Results are stored as shown in the following table.

Word	Contents (Hex)	Meaning
D	28 01	EXPLICIT MESSAGE SEND command code: 28 01 Hex
D+1	00 00	Response code (0000 Hex: Normal completion)
D+2	00 xx	No. of received bytes (data length after D+3)
D+3	0E 8E	Slave node address: 14 RS-232C RECEIVE DATA READ response service code: 8E Hex
D+4	HH LL	The receive data read from RS-232C port 1 is stored in sequence from the leftmost bit to the rightmost bit.
to	to	

Control Words (C: First Control Word)

Word	Contents (Hex)	Meaning
C	00 09	No. of bytes of command data: S (9 bytes of command data)
C+1	00 xx	No. of bytes of response data: D
C+2	00 02	Destination node network address: 2
C+3	1B FE	Master's node address: 27 Master's Unit address: FE Hex
C+4	00 00	Response returned, communications port No.: 0, No. of retries: 0
C+5	00 64	Response monitoring time: 10 s

Using IOWR to Write Data (C200HX/HG/HE PLCs)

The following example shows how to use the IOWR instruction to change all the parameters of port 1 of the RS-232C Unit at once from the Master Unit (C200HX/HG/HE PLC). For more detailed information on explicit messages, refer to the Master Unit's *Operation Manual*. For information on the IOWR instruction, refer to the *SYSMAC C200HX/HG/HE PLCs Operation Manual*.

Example Conditions

Master node address: 27
Master's Unit address: 5
Slave node address: 14

Example: Using IOWR

```
[IOWR  C  S  D]
```

C: Control Words (C: First Control Word)

Word	Contents (Hex)	Meaning
C	1B FE	Master's node address: 27 Master's Unit address: FE Hex

Source Words (S: First Source Word)

Word	Contents (Hex)	Meaning
S	82 07	Response storage words: DM2000 82 Hex: DM Area, 07D0 Hex: 2000 words (For more detail, refer to the PLC Operation Manual.)
S+1	D0 00	
S+2	00 64	Response monitoring time: 10 s
S+3	00 0F	No. of bytes of command data: 15 bytes (No. of bytes from S+4 onwards.)

Word	Contents (Hex)	Meaning
S+4	28 01	EXPLICIT MESSAGE SEND command code: 28 01 Hex
S+5	0E 10	Slave node address: 14 PARAMETER SET response service code: 10 Hex
S+6	00 94	Class ID: 0094 Hex
S+7	00 01	Instance ID: For IR Area 1: 0001 Hex
S+8	64 06	ALL PARAMETER SET Attribute ID: 64 Hex, (8 bits, even parity, 1 stop bit): 06 Hex.
S+9	06 00	Header code, delimiter code, and flow control all enabled: 00 Hex, 1,200 bps: 00 Hex.
S+10	02 03	Header code STX: 02 Hex, Delimiter code ETX: 03 Hex.
S+11	00 00	No. of bytes after delimiter = 0 (00 Hex)

D: Transmission Information (Destination Unit and Number of Words).

Word	Contents (Hex)	Meaning
D	05 12	Master's Unit address: 5, No. of words of command data: 12 words (specified in BCD) (No. of words from S onwards)

Response Storage Words

Results are stored as shown in the following table.

Word	Contents (Hex)	Meaning
DM2000	28 01	EXPLICIT MESSAGE SEND command code: 28 01 Hex
DM2001	00 00	Response code (0000 Hex: Normal completion)
DM2002	00 02	No. of received bytes (data length after DM2003): 2 bytes
DM2003	0E 90	Slave node address: 14 PARAMETER SET response service code: 90 Hex

Using IOWR to Read Data (C200HX/HG/HE PLCs)

The following example shows how to use the IOWR instruction to read the reception data of port 1 of the RS-232C Unit, from the Master Unit (C200HX/HG/HE PLC). The maximum amount of data that can be read from an OMRON DeviceNet Master at one time is 152 bytes.

Before using the RS-232C RECEIVE DATA READ command, be sure that the communications status Received Flag (Port 1: bit 03, Port 2: bit 11), allocated in the Master's IN Area is ON.

For more detailed information on explicit messages, refer to the Master Unit's *Operation Manual*. For information on the IOWR instruction, refer to the *SYSMAC C200HX/HG/HE PLCs Operation Manual*.

Example Conditions

Master node address: 27
Master's Unit address: 5
Slave node address: 14

Example: Using IOWR

```
[IOWR  C  S  D]
```

C: Control Words (C: First Control Word)

Word	Contents (Hex)	Meaning
C	1B FE	Master's node address: 27 Master's Unit address: FE Hex

Source Words (S: First Source Word)

Word	Contents (Hex)	Meaning
S	82 07	Response storage words: DM2000 82 Hex: DM Area, 07D0 Hex: 2000 words (For more detail, refer to the PLC Operation Manual.)
S+1	D0 00	
S+2	00 64	Response monitoring time: 10 s
S+3	00 09	No. of bytes of command data: 9 bytes (No. of bytes from S+4 onwards.)
S+4	28 01	EXPLICIT MESSAGE SEND command code: 28 01 Hex
S+5	0E 0E	Slave node address: 14 RS-232C RECEIVE DATA READ response service code: 0E Hex
S+6	00 94	Class ID: 0094 Hex
S+7	00 02	Instance ID: For port 1: 0002 Hex
S+8	64 00	Attribute ID: 64 Hex

D: Transmission Information (Destination Unit and Number of Words).

Word	Contents (Hex)	Meaning
D	05 09	Master's Unit address: 5, No. of words of command data: 9 words (specified in BCD) (No. of words from S onwards)

Response Storage Words

Results are stored as shown in the following table.

Word	Contents (Hex)	Meaning
DM2000	28 01	EXPLICIT MESSAGE SEND command code: 28 01 Hex
DM2001	00 00	Response code (0000 Hex: Normal completion)
DM2002	00 xx	No. of received bytes (data length after D+3)
DM2003	0E 8E	Slave node address: 14 RS-232C RECEIVE DATA READ response service code: 8E Hex
DM2004 on	HH LL...	The receive data read from RS-232C port 1 is stored in sequence from the leftmost bit to the rightmost bit.

6-2-9 Dimensions

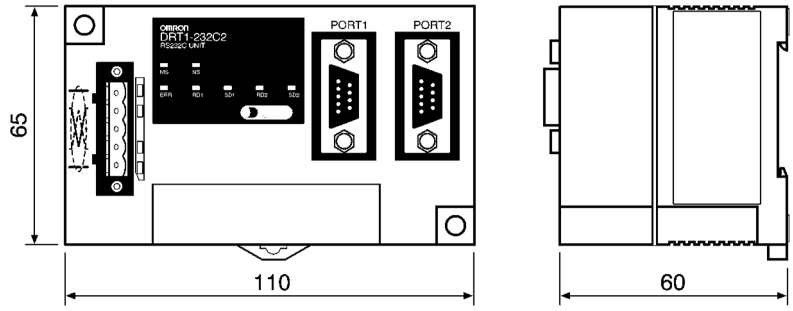

Mounting holes

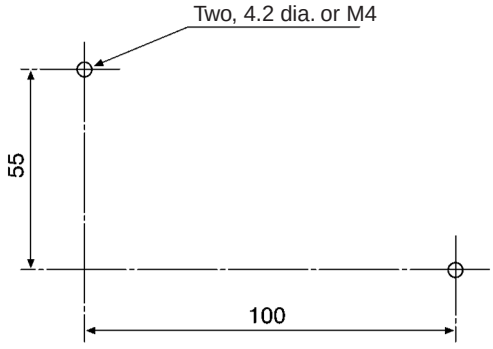

Unit: mm

6-2-10 Mounting in Control Panels

Either of the following methods can be used to mount an RS-232C Unit in a control panel.

Using Screws

Drill mounting holes in the control panel according to the dimensions provided for mounting holes in the dimensions diagrams and then secure the RS-232C Unit with M4 screws. The appropriate tightening torque is 0.6 to 0.98 N·m.

Using DIN Track

Mount the back of the RS-232C Unit to a 35-mm DIN Track. To mount the Unit, pull down on the mounting hook on the back of the Unit with a screwdriver, insert the DIN Track on the back of the Unit, and then secure the Unit to the DIN Track. When finished, secure all Slaves on both ends of the DIN Track with End Plates.

Connecting End Plates

Hook the bottom of the End Plate onto the DIN Track, as shown at (1) in the following diagram, then hook the top of the End Plate as shown at (2).

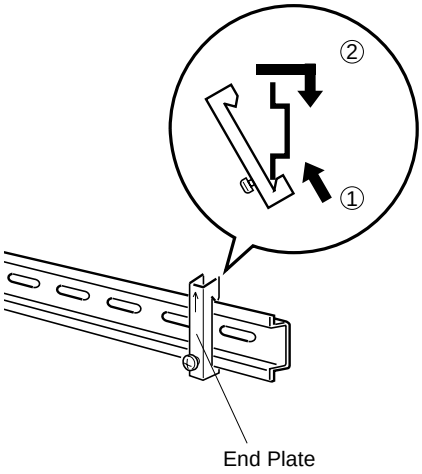

Note Always attach End Plate to both ends of Slaves connected to DIN Track.

Mounting Direction

Unless specific restrictions are given for the Slave, it can be mounted in any direction. Any of the following directions are okay.

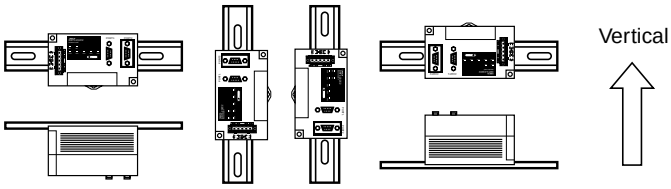

6-2-11 Wiring

Internal Power Supply

The recommended Power Supply Units are as follows:

- S82K-05024 (OMRON) or equivalent.
- S82J-□524 (OMRON) or equivalent.

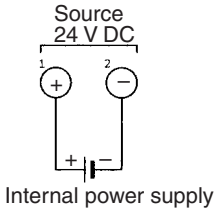

Note

1. Always use crimp terminals for wiring.
2. Do not connect wires directly to the terminals.
3. Tighten terminal screws to a torque of 0.3 to 0.5 N • m.
4. Use the following M3 crimp terminals.

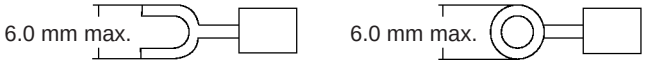

RS-232C Connector

Pin Arrangement (Same for Ports 1 and 2)

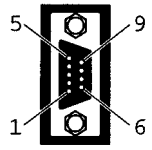

Pin No.	Symbol	Signal name	Signal direction RS-232C Unit ↔ External devices
1	---	Not used	---
2	RD	Receive data	←
3	SD	Send data	→
4	---	Not used	---
5	SG	Signal ground	---
6	---	Not used	---
7	RS	Request send (See note.)	→
8	CS	Can send (See note.)	←
9	---	Not used	---

Note The CS signal is always checked. Data will not be output if CS is not connected. Short-circuit the RS-CS signals when they are not used.

A connection example using applicable connectors and recommended cables is provided below. Refer to the following explanation when creating cables.

Applicable Connectors

Plug: XM2D-0901 (OMRON, 9-pin female) or equivalent.
Hood: XM2S-0913 (OMRON, 9-pin inch-pitch screws) or equivalent.

Recommended Cables

UL2464 AWG28 × 5P IFS-RVV-SB (UL product, Fujikura)
AWG28 × 5P IFVV-SB (Non-UL products, Fujikura)
UL2464-SB 5P × AWG28 (UL product, Hitachi)
CO-MA-VV-SB 5P × AWG28 (Non-UL product, Hitachi)

Connection Example

The following diagram gives an connection example. Connection methods however, may differ depending on the connected devices, so refer to the connected device's instruction manual for further information.

Connecting an OMRON V500-R32□ Bar Code Reader

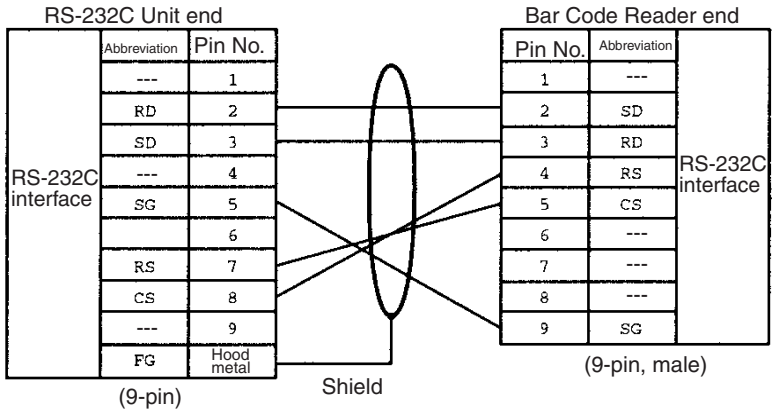

6-2-12 RS-232C Unit Application Examples

This section explains the procedure for using explicit messages with an RS-232C Unit. The following system configuration example is used in this example. When explicit messages are used with an RS-232C Unit, the communications conditions for ports 1 and 2 on the RS-232C Unit can be set individually, and data can be read or written to the RS-232C Unit.

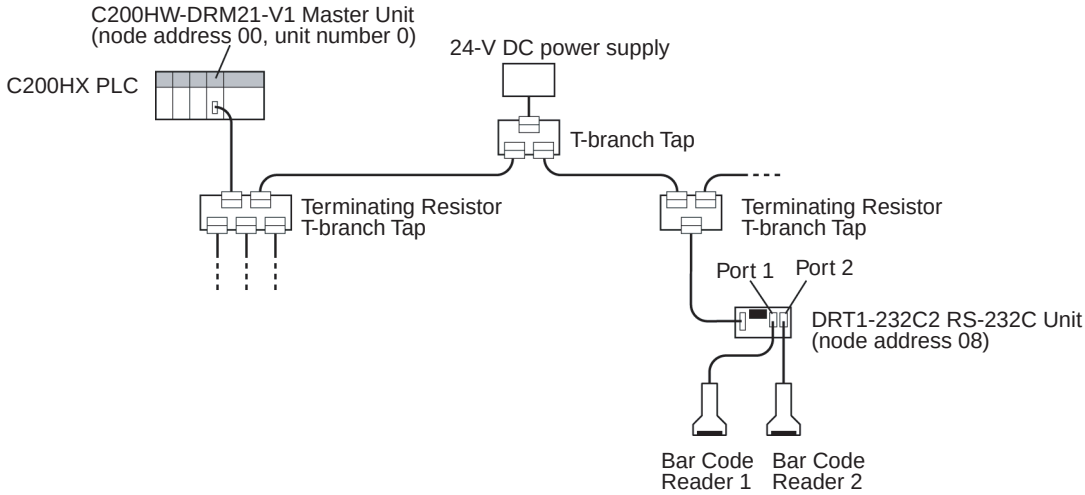

Setting Port Parameters

When IR 00000 (port 1 settings) or IR 00001 (port 2 settings) turns ON in the CPU Unit of the Master Unit, the RS-232C Unit's port parameters will be set. For details on Bar Code Reader settings, refer to the Bar Code Reader's Operation Manual.

Set the port parameters as follows:

- Port 1 Parameters

Data length:	8 bits
Parity:	None
Stop bits:	1
Header code:	Disabled
Delimiter code:	Enabled
Flow control:	Enabled
Baud rate:	9,600 bps
Delimiter code CR code:	0D Hex

Number of bytes received after delimiter:0

- Port 2 Parameters

Data length:	7 bits
Parity:	Even
Stop bits:	2
Header code:	Enabled
Delimiter code:	Enabled
Flow control:	Disabled
Baud rate:	2,400 bps
Header code STX code:	02 Hex

Delimiter code
ETX code: 03 Hex

Number of bytes received after delimiter:0

If any of the port parameters are changed, the changed settings will become valid only when the port is reset or the RS-232C Unit is started up again. In the following programming example, the ports are reset after the parameters are set.

Ladder Program

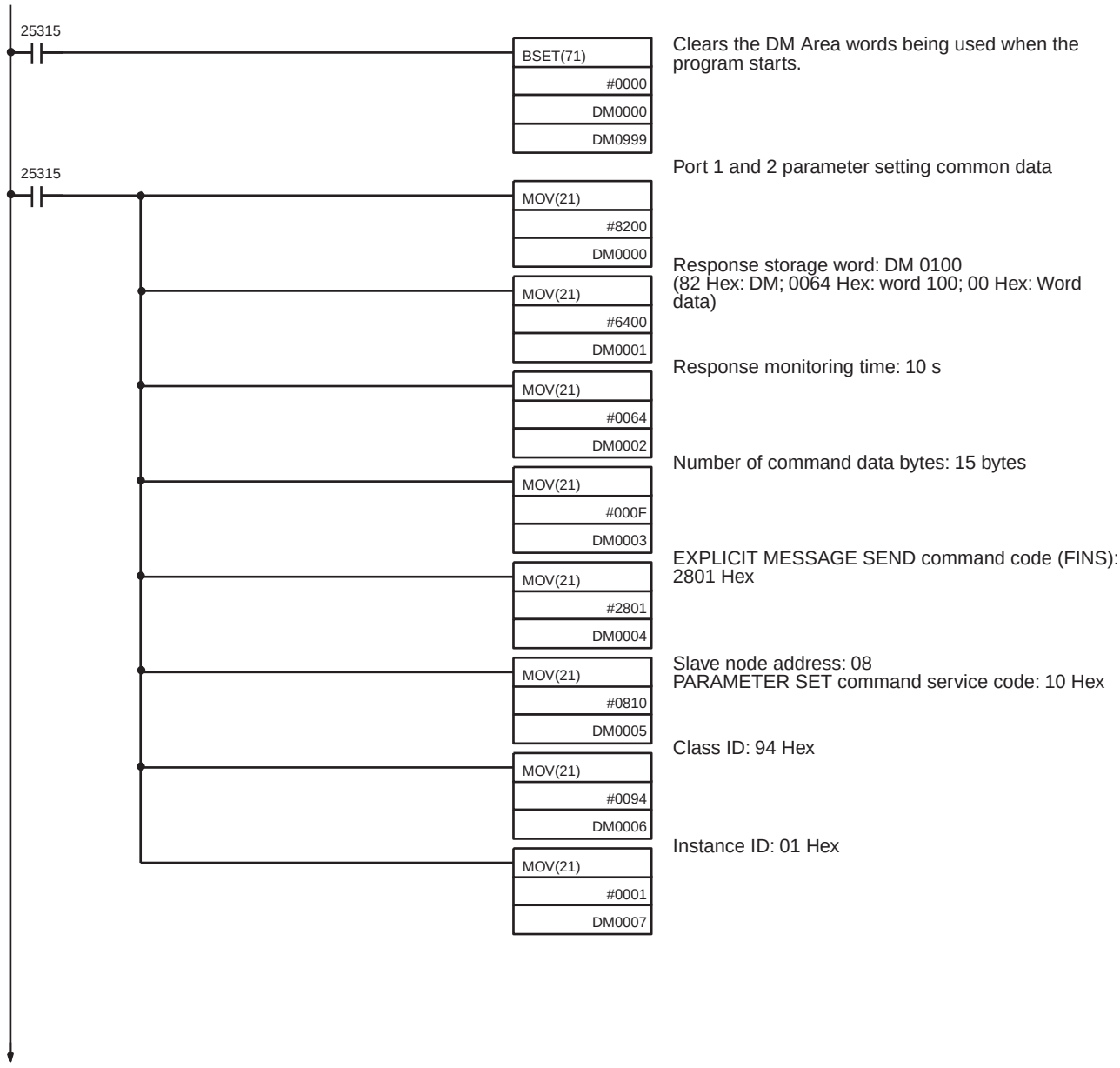

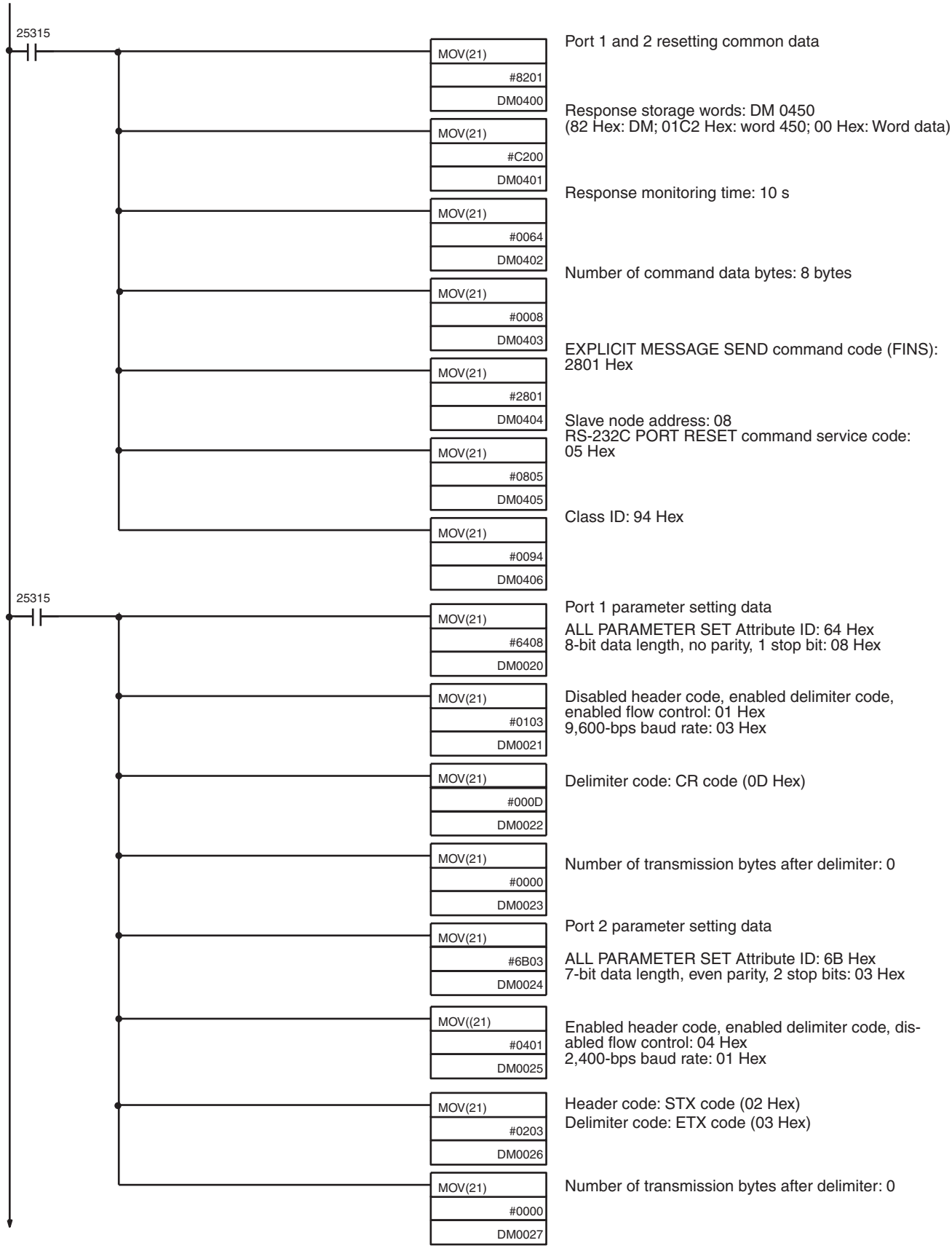
25315
MOV(21)
#8201
DM0400
Port 1 and 2 resetting common data
MOV(21)
#C200
DM0401
Response storage words: DM 0450
(82 Hex: DM; 01C2 Hex: word 450; 00 Hex: Word data)
MOV(21)
#0064
DM0402
Response monitoring time: 10 s
MOV(21)
#0008
DM0403
Number of command data bytes: 8 bytes
MOV(21)
#2801
DM0404
EXPLICIT MESSAGE SEND command code (FINS):
2801 Hex
MOV(21)
#0805
DM0405
Slave node address: 08
RS-232C PORT RESET command service code:
05 Hex
MOV(21)
#0094
DM0406
Class ID: 94 Hex
25315
MOV(21)
#6408
DM0020
Port 1 parameter setting data
ALL PARAMETER SET Attribute ID: 64 Hex
8-bit data length, no parity, 1 stop bit: 08 Hex
MOV(21)
#0103
DM0021
Disabled header code, enabled delimiter code,
enabled flow control: 01 Hex
9,600-bps baud rate: 03 Hex
MOV(21)
#000D
DM0022
Delimiter code: CR code (0D Hex)
MOV(21)
#0000
DM0023
Number of transmission bytes after delimiter: 0
MOV(21)
#6B03
DM0024
Port 2 parameter setting data
ALL PARAMETER SET Attribute ID: 6B Hex
7-bit data length, even parity, 2 stop bits: 03 Hex
MOV((21)
#0401
DM0025
Enabled header code, enabled delimiter code, dis-
abled flow control: 04 Hex
2,400-bps baud rate: 01 Hex
MOV(21)
#0203
DM0026
Header code: STX code (02 Hex)
Delimiter code: ETX code (03 Hex)
MOV(21)
#0000
DM0027
Number of transmission bytes after delimiter: 0

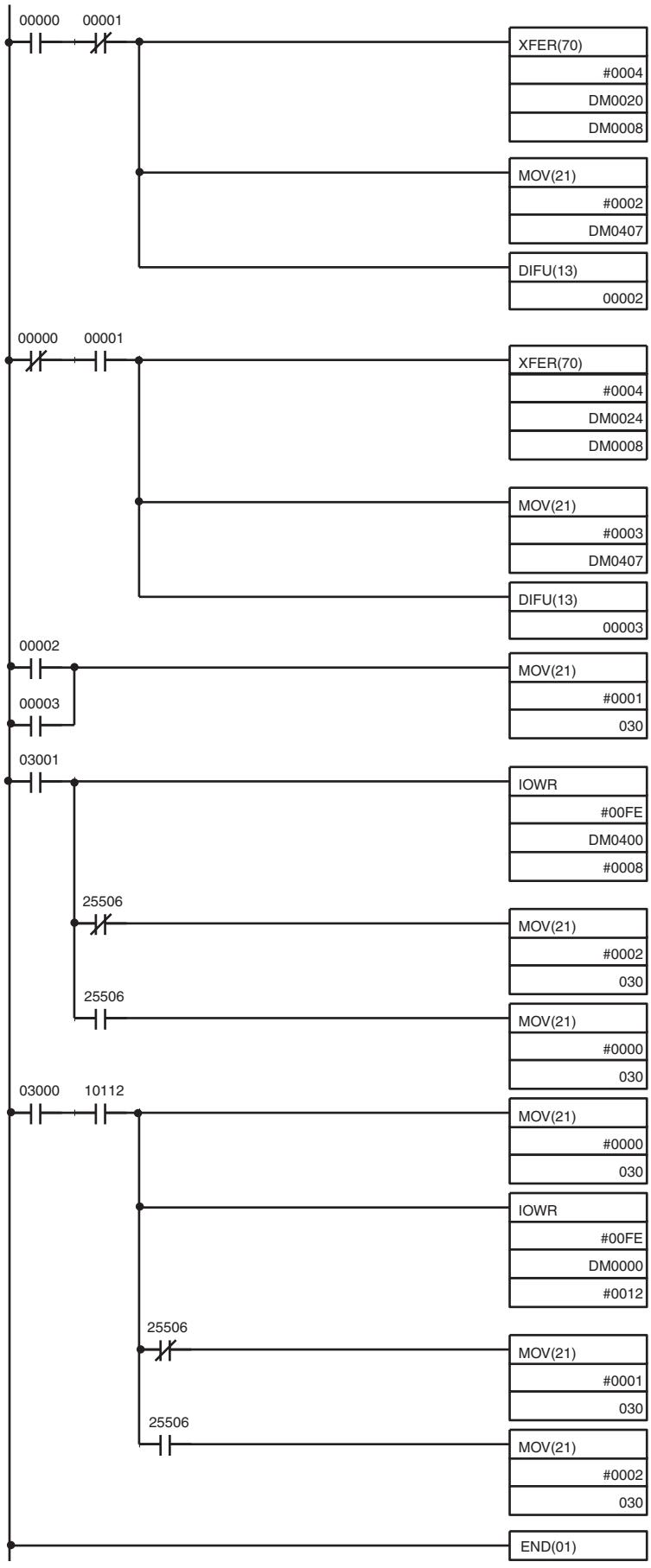

Writing data from port 1 to command data area

When IR 00000 turns ON, data held at port 1 will be written to the command data area.

IR 00002 turned ON for one cycle (as a differentiated bit).

Writing data from port 2 to command data area

When IR 00001 turns ON, data held at port 2 will be written to the command data area.

IR 00003 turned ON for one cycle (as a differentiated bit).

When IR 00002 or IR 00003 turns ON, the sequential processing control bit IR 03000 will turn ON.

When IR 03001 turns ON, the port reset message will be transmitted.

00FE: Master's node address 00, Master's unit address FE Hex

DM 0400: Command data storage words

0008 Hex: Master's unit number 00, 8 command data words (BCD)

If the Equals Flag is OFF (error in writing to the Master), IR 03001 will be turned ON, and the data will be transmitted again.

If the Equals Flag is ON (writing to the Master has been completed normally), IR 03001 will be cleared (message transmission completed).

When IR 03000 turns ON, the CPU Unit will check that IR 10112 (unit no. 0 Master's Message Communications Enabled Flag) is ON, and the ALL PARAMETER SET message is transmitted.

00FE: Master's node address 00, Master's unit address FE Hex

DM 0000: Command data storage words

0012 Hex: Master's unit number 00, 12 command data words (BCD)

If the Equals Flag is OFF (error in writing to the Master), IR 03001 will be turned ON, and the data will be transmitted again.

If the Equals Flag is ON (writing to the Master has been completed normally), IR 03001 will be turned ON (the port will be reset).

Note

1. When transmitting explicit messages from an OMRON Master Unit, specify 2 bytes each for the Class ID and the Instance ID. Set 1 byte as the Attribute ID for the parameter setting command.
2. The parameters that are set are held internally.
3. To enable the parameters that have been set, the RS-232C PORT RESET command has been used in the program examples. The parameters can also be enabled, however, by turning OFF the power to the RS-232C Unit and then turning it ON again.

Responses

The following responses will be stored if the parameters are set properly.

PARAMETER SET Response

Words	Contents (Hex)	Meaning
DM 0100	28 01	EXPLICIT MESSAGE SEND command code is 28 01 Hex.
DM 0101	00 00	Response code is 0000 Hex (normal completion).
DM 0102	00 02	Number of bytes received (data length from word DM 0103 onwards) is 2 bytes.
DM 0103	08 90	Slave node address is 08. PARAMETER SET response service code is 90 Hex.

PORT RESET Response

Words	Contents (Hex)	Meaning
DM 0450	28 01	EXPLICIT MESSAGE SEND command code is 28 01 Hex.
DM 0451	00 00	Response code is 0000 Hex (normal completion).
DM 0452	00 02	Number of bytes received (data length from word DM 0453 onwards) is 2 bytes.
DM 0453	08 85	Slave node address is 08. PORT RESET response service code is 85 Hex.

6-2-13 Reading RS-232C Unit Parameters

With the following example, the port parameters that are set for the RS-232C Unit are all read for the port when IR 00004 (port 1) or IR 00005 (port 2) turns ON in the CPU Unit of the Master Unit.

When the RS-232C Unit's PARAMETER READ command is used, the parameters that are valid at that time will be read. After setting the parameters, the RS-232C Unit must be turned OFF and then ON again, or the ports must be reset for the new parameters to be enabled.

Ladder Program

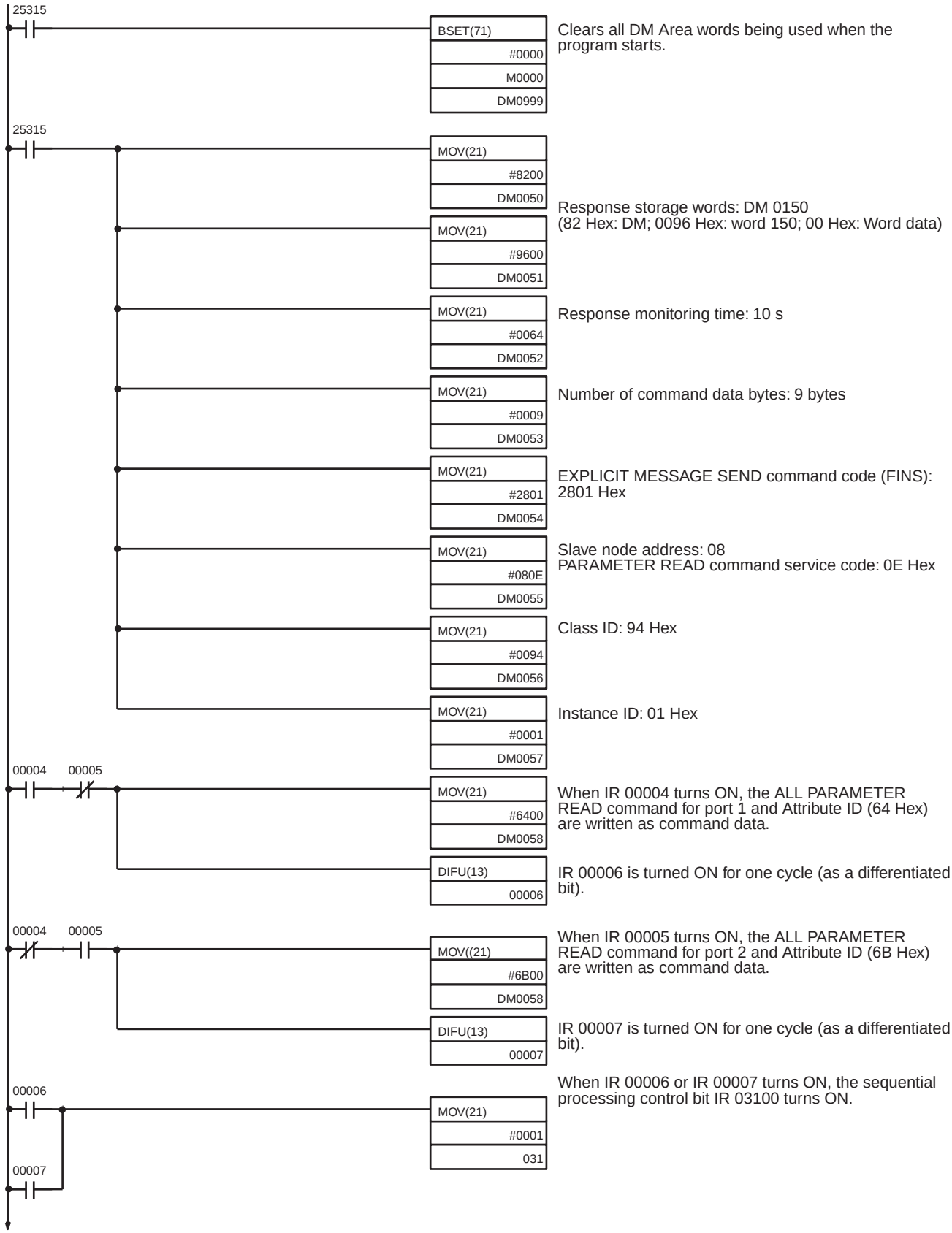

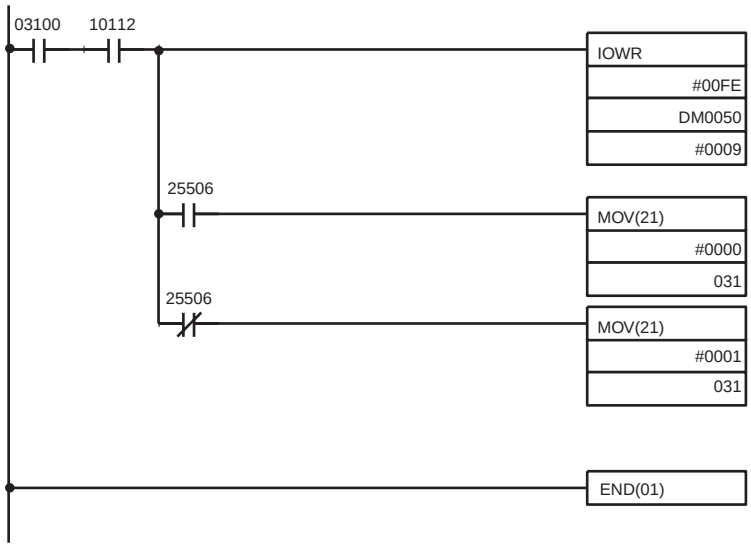

When IR 03100 turns ON, the CPU Unit will check that IR 10112 (unit no. 0 Master's Message Communications Enabled Flag) is ON, and message transmission will start.

00FE: Master's node address 00, Master's unit address FE Hex

DM 0050: Command data storage words

0009 Hex: Master's unit number 00, 9 command data words (BCD)

If the Equals Flag is ON (writing to the Master has been completed normally), IR 03101 will be cleared (message transmission completed).

If the Equals Flag is OFF (error in writing to the Master), IR 03101 will be turned ON, and the data will be transmitted again.

Note When transmitting explicit messages from an OMRON Master Unit, specify 2 bytes each for the Class ID and the Instance ID. Set 1 byte as the Attribute ID for the PARAMETER READ command.

Response

The following response will be stored if the parameters are read properly.

Words	Contents (Hex)	Meaning
DM 0150	28 01	EXPLICIT MESSAGE SEND command code is 28 01 Hex.
DM 0151	00 00	Response code is 0000 Hex (normal completion).
DM 0152	00 08	Number of bytes received (data length from word DM 0153 onwards) is 8 bytes.
DM 0153	08 8E	Slave node address is 08. PARAMETER READ response service code is 8E Hex.
DM 0154	xx xx	Leftmost byte: Setting for the data bit length Rightmost byte: Setting for the header code enable/disable
DM 0155	xx xx	Leftmost byte: Setting for the baud rate Rightmost byte: Setting for the header code
DM 0156	xx xx	Leftmost byte: Setting for the delimiter code Rightmost byte: Setting for the number of bytes/frames received after the delimiter

6-2-14 Reading Data Received by RS-232C Unit Ports

In the following example, the data received by the Bar Code Reader is stored in the receive buffer of the RS-232C Unit and read to the Master Unit. If there is data already in the receive buffer of the RS-232C Unit, it will be read to the Master Unit. Response data from port 1 is stored in DM 0300 onwards, and response data from port 2 is stored in DM 0350 onwards. In the following program example, however, the data received is no more than 50 words (100 bytes).

Ladder Program

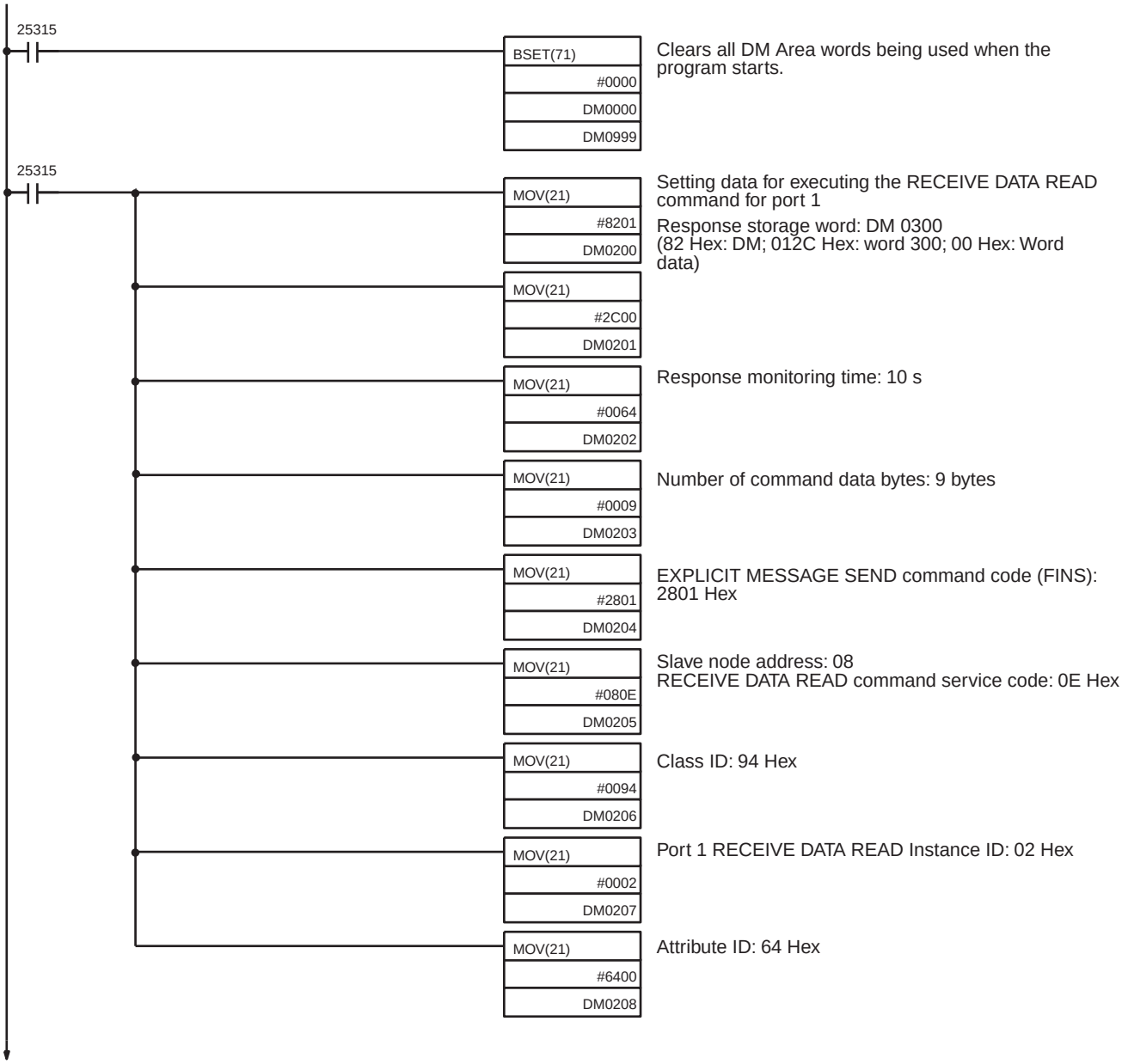

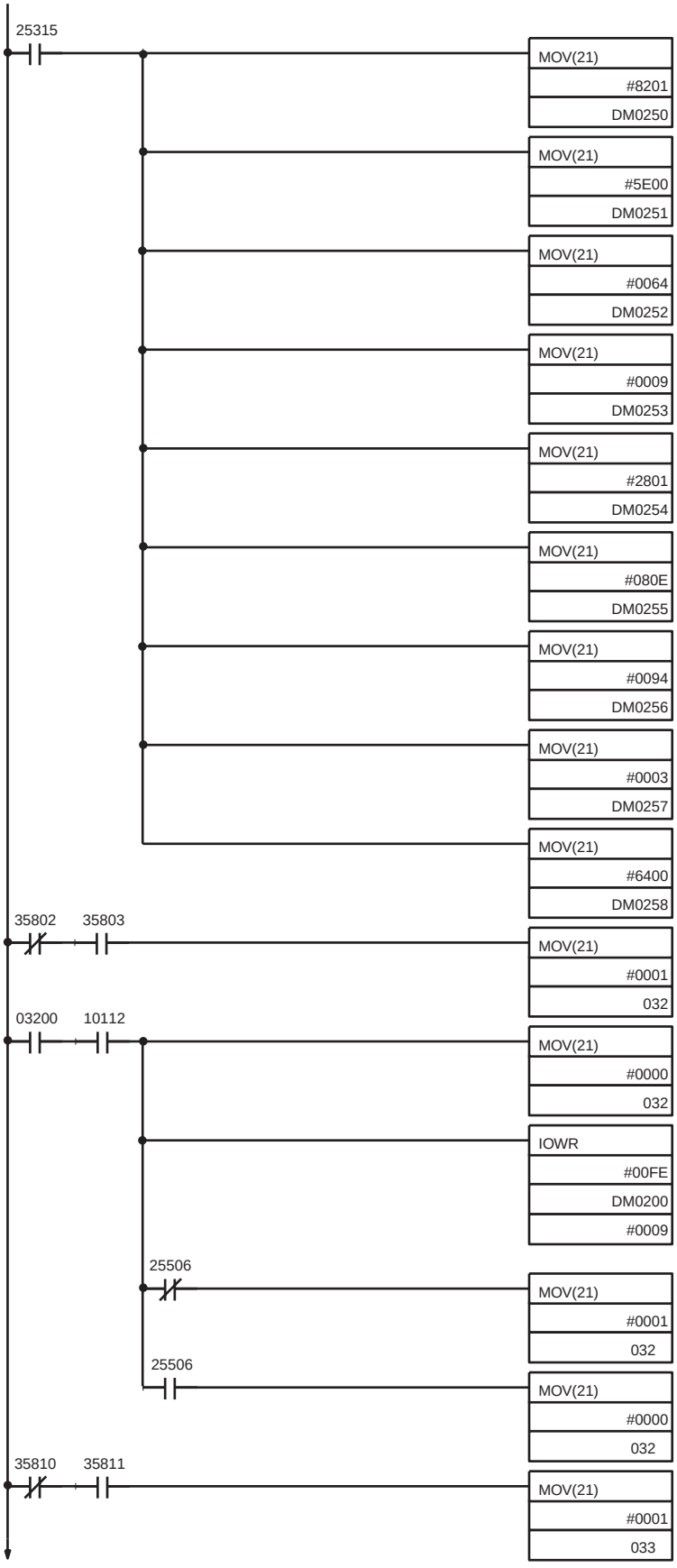

Setting data for executing the RECEIVE DATA READ command for port 2

Response storage words: DM 0350
(82 Hex: DM; 015E Hex: word 350; 00 Hex: Word data)

Response monitoring time: 10 s

Number of command data bytes: 9 bytes

EXPLICIT MESSAGE SEND command code (FINS): 2801 Hex

Slave node address: 08
RECEIVE DATA READ command service code: 0E Hex

Class ID: 94 Hex

Port 1 RECEIVE DATA READ Instance ID: 03 Hex

Attribute ID: 64 Hex

Reading Data Received at Port 1

If SR 35802 (Port 1 RS-232C Receiving Flag) is OFF and SR 35803 (Port 1 RS-232C Received Flag) is ON, the sequential processing control bit IR 03200 will be turned ON.

When IR 03200 turns ON, the CPU Unit will check that IR 10112 (unit no. 0 Master's Message Communications Enabled Flag) is ON, and message transmission will start.

00FE: Master's node address 00, Master's unit address FE Hex

DM 0200: Command data storage words

0009 Hex: Master's unit number 00, 9 command data words (BCD)

If the Equals Flag is OFF (error in writing to the Master), IR 03200 will be turned ON, and the data will be transmitted again.

If the Equals Flag is ON (writing to the Master has been completed normally), IR 03200 will be cleared (message transmission completed).

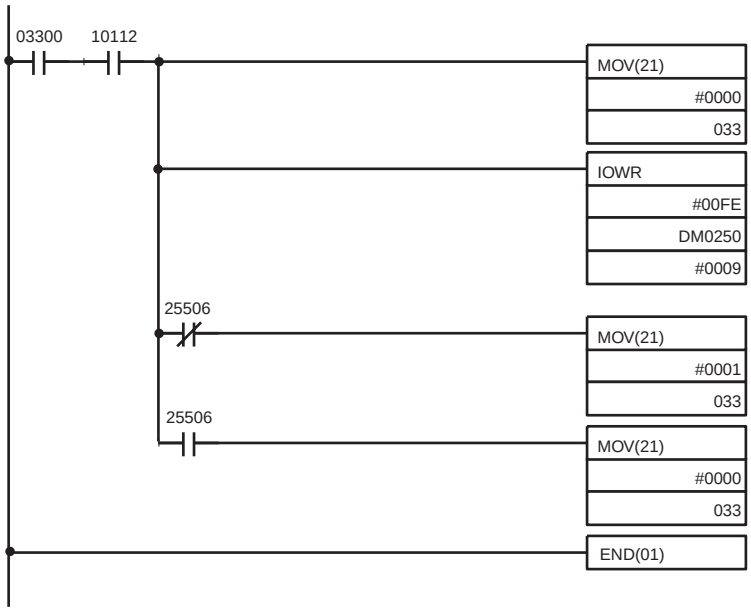

Reading Data Received at Port 2

If SR 35810 (Port 2 RS-232C Receiving Flag) is OFF and SR 35811 (Port 2 RS-232C Received Flag) is ON, the sequential processing control bit IR 03300 will be turned ON.

When IR 03300 turns ON, the Unit will check that IR 10112 (unit no. 0 Master's Message Communications Enabled Flag) is ON, and message transmission starts.
00FE: Master's node address 00, Master's unit address FE Hex

DM 0250: Command data storage words

0009 Hex: Master's unit number 00, 9 command data words (BCD)

If the Equals Flag is OFF (error in writing to the Master), IR 03300 will be turned ON, and the data will be transmitted again.

If the Equals Flag is ON (writing to the Master has been completed normally), IR 03300 will be cleared (message transmission completed).

Note When transmitting explicit messages from an OMRON Master Unit, specify 2 bytes each for the Class ID and the Instance ID. Set 1 byte as the Attribute ID for the RECEIVE DATA READ command.

Responses

The following responses will be stored if the data is read properly.

Port 1 Response

Words	Contents (Hex)	Meaning
DM 0300	28 01	EXPLICIT MESSAGE SEND command code is 28 01 Hex.
DM 0301	00 00	Response code is 0000 Hex (normal completion).
DM 0302	xx xx	Number of bytes received (data length from word DM 0203 onwards).
DM 0303	08 8E	Slave node address is 08. RECEIVE DATA READ response service code is 8E Hex.
DM 0304 on	xx xx...	Data received from port 1 of the RS-232C Unit and read is stored in order from the leftmost byte to the rightmost byte.

Port 2 Response

Words	Contents (Hex)	Meaning
DM 0350	28 01	EXPLICIT MESSAGE SEND command code is 28 01 Hex.
DM 0351	00 00	Response code is 0000 Hex (normal completion).
DM 0352	xx xx	Number of bytes received (data length from word DM 0353 onwards).
DM 0353	08 8E	Slave node address is 08. RECEIVE DATA READ response service code is 8E Hex.
DM 0354 on	xx xx...	Data received from port 2 of the RS-232C Unit and read is stored in order from the leftmost byte to the rightmost byte.

SECTION 7
Communications Timing

This section describes the time required for a complete communications cycle, for an output response to be made to an input, to start the system, and to send a message.

7-1 Remote I/O Communications Characteristics 300
7-1-1 I/O Response Time 300
7-1-2 Communications Cycle Time and Refresh Time 305
7-1-3 More than One Master in Network 307
7-1-4 System Startup Time 308
7-2 Message Communications Time 309

7-1 Remote I/O Communications Characteristics

This section describes the characteristics of DeviceNet communications when OMRON Master and Slave Units are being used. Use this section for reference when planning operations that require precise I/O timing.

The equations provided here are valid under the following conditions:

1,2,3...

1. The Master Unit is operating with the scan list enabled.
2. All of the required Slaves are participating in communications.
3. No errors are being indicated at the Master Unit.
4. Messages are not being produced in the Network (from another company's configurator, for example).

Note The values provided by these equations may not be accurate if another company's Master or Slave is being used in the Network.

7-1-1 I/O Response Time

The I/O response time is the time it takes from the reception of an input signal at an Input Slave to the output of the corresponding output signal at an Output Slave.

CV-series PLCs (Asynchronous Mode)

The following timing charts show the minimum and maximum I/O response times of the DeviceNet Network for a CV-series PLC operating in asynchronous mode.

Minimum I/O Response Time

The minimum I/O response time occurs when the DeviceNet Master Unit refreshing is executed just after the input signal is received by the Master and instruction execution is completed within one peripheral servicing cycle.

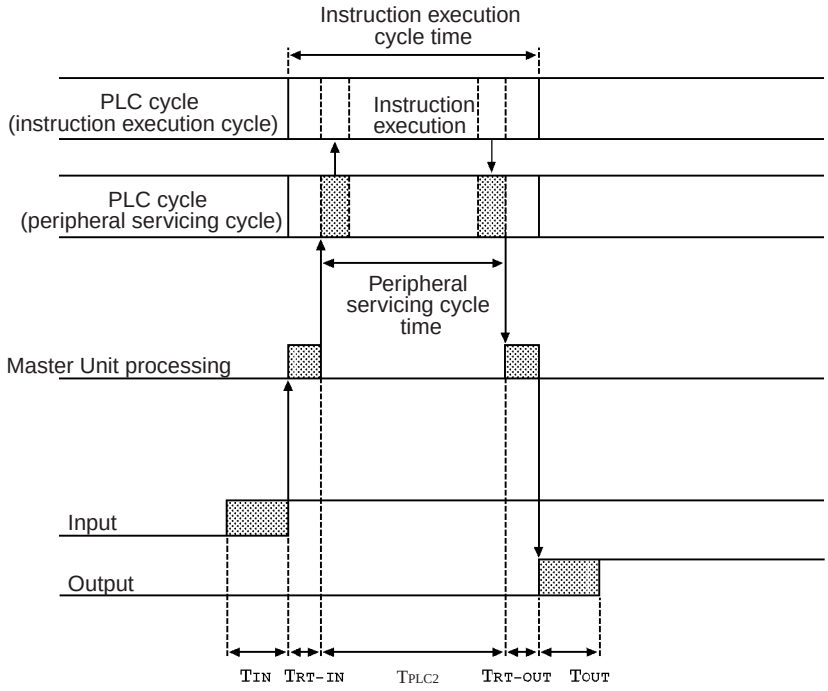

T_{IN}: The Input Slave's ON (OFF) delay (Minimum value: 0.)

T_{OUT}: The Output Slave's ON (OFF) delay (Minimum value: 0.)

$T_{RT\text{-}IN}$: Input Slave's communications time/Slave (See page 306.)

$T_{RT\text{-}OUT}$: Output Slave's communications time/Slave (See page 306.)
T_{PLC2}:The PLC's peripheral servicing cycle time

The minimum I/O response time (T_{MIN}) is the total of the following terms:

$$T_{MIN} = T_{IN} + T_{RT\text{-}IN} + T_{PLC2} + T_{RT\text{-}OUT} + T_{OUT}$$

Note
1. Refer to *SECTION 4 General-purpose Slaves, SECTION 5 Environment-resistive and Waterproof Slaves,* and *SECTION 6 Special I/O Slave Units Specifications* for details on Input and Output Slaves' delay times.
2. Refer to *Refresh Time* on page 307 and the PLC's Operation Manual for details on the PLC's peripheral servicing cycle time.

Maximum I/O Response Time

The maximum I/O response time occurs with the I/O timing shown in the following diagram.

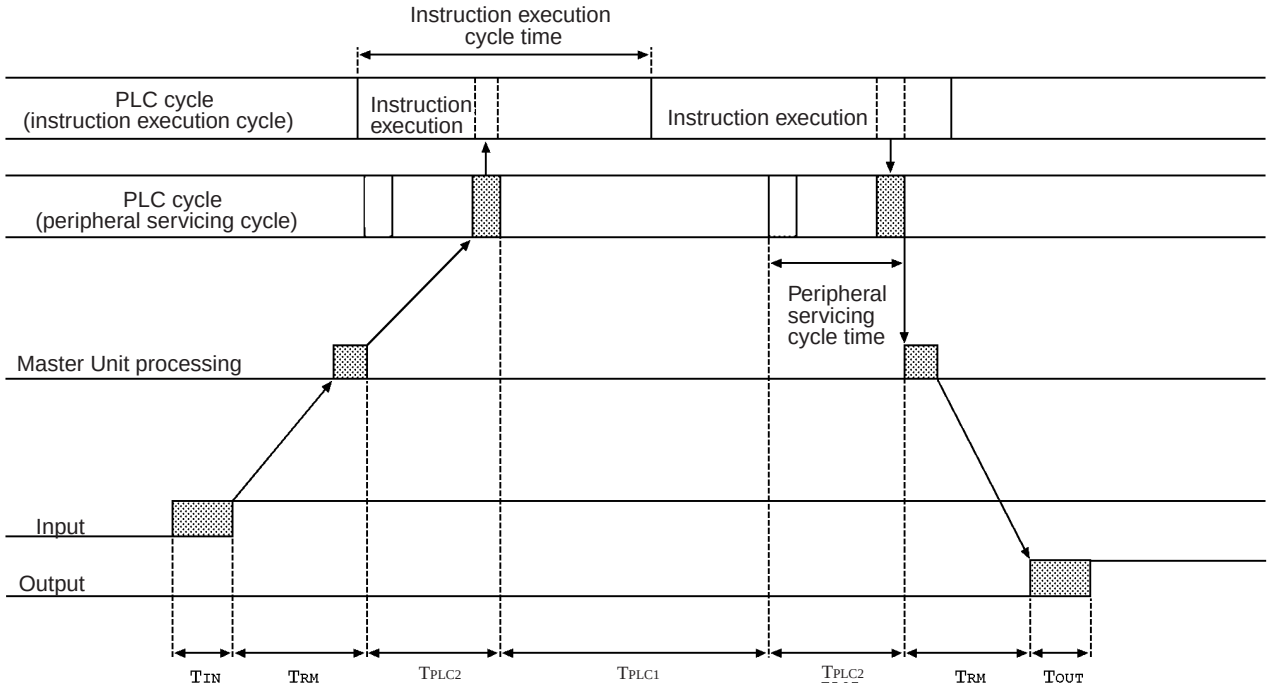

T_{IN}: The Input Slave's ON (OFF) delay
T_{OUT}: The Output Slave's ON (OFF) delay
T_{RM}: Master Unit's communications cycle time (See page 305.)
T_{PLC1}: The PLC's instruction execution cycle time
T_{PLC2}: The PLC's peripheral servicing cycle time

The maximum I/O response time (T_{MAX}) is the total of the following terms:

$$T_{MAX} = T_{IN} + 2 \times T_{RM} + T_{PLC1} + 2 \times T_{PLC2} + T_{OUT}$$

Note
1. Refer to *SECTION 4 General-purpose Slaves, SECTION 5 Environment-resistive and Waterproof Slaves,* and *SECTION 6 Special I/O Slave Units Specifications* for details on Input and Output Slaves' delay times.
2. Refer to *Refresh Time* on page 307 and the PLC's Operation Manual for details on the PLC's peripheral servicing cycle time. (Look under Asynchronous Operation.)

CV-series PLCs (Synchronous Mode)

The following timing charts show the minimum and maximum I/O response times of the DeviceNet Network for a CV-series PLC operating in synchronous mode.

Minimum I/O Response Time

The minimum I/O response time occurs with the I/O timing shown in the following diagram.

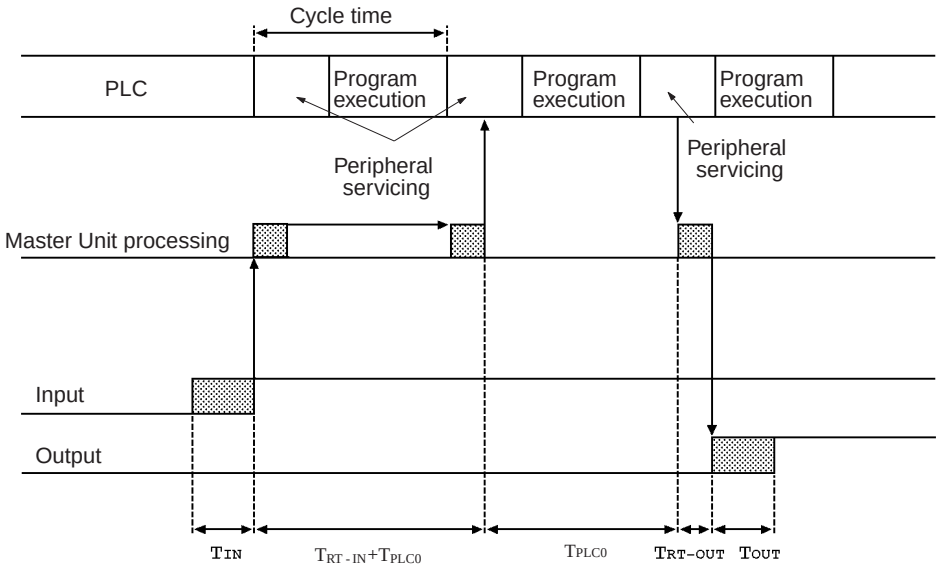

T_{IN}: The Input Slave's ON (OFF) delay

T_{OUT}: The Output Slave's ON (OFF) delay

$T_{RT\text{-}IN}$: Input Slave's communications time/Slave (See page 306.)

$T_{RT\text{-}OUT}$: Output Slave's communications time/Slave (See page 306.)

T_{PLC0}: The PLC's cycle time (program execution + peripheral servicing)

The minimum I/O response time (T_{MIN}) is the total of the following terms:

$$T_{MIN} = T_{IN} + T_{RT\text{-}IN} + 2 \times T_{PLC0} + T_{RT\text{-}OUT} + T_{OUT}$$

Note

1. Refer to *SECTION 4 General-purpose Slaves, SECTION 5 Environment-resistive and Waterproof Slaves,* and *SECTION 6 Special I/O Slave Units Specifications* for details on Input and Output Slaves' delay times.
2. Refer to *Refresh Time* on page 307 and the PLC's Operation Manual for details on the PLC's peripheral servicing cycle time. (See under *Synchronous Operation*.)

Maximum I/O Response Time

The maximum I/O response time occurs with the I/O timing shown in the following diagram.

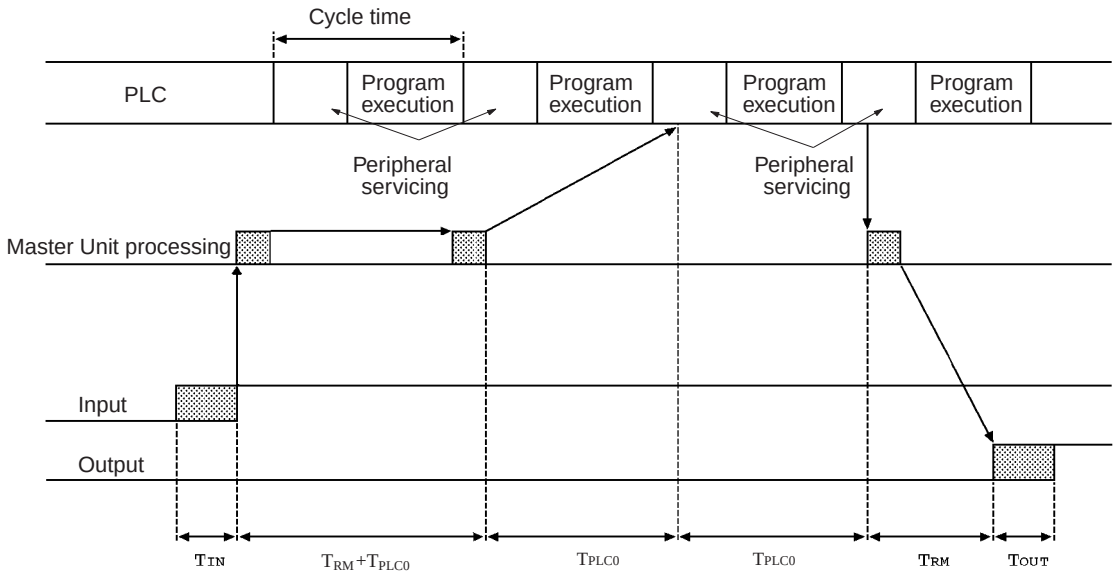

T_{IN}: The Input Slave's ON (OFF) delay

T_{OUT}: The Output Slave's ON (OFF) delay

T_{RM}: Master Unit's communications cycle time (See page 305.)

T_{PLC0}: The PLC's cycle time (program execution + peripheral servicing)

The maximum I/O response time (T_{MAX}) is the total of the following terms:

$$T_{MAX} = T_{IN} + 2 \times T_{RM} + 3 \times T_{PLC0} + T_{OUT}$$

Note

1. Refer to *SECTION 4 General-purpose Slaves, SECTION 5 Environment-resistive and Waterproof Slaves,* and *SECTION 6 Special I/O Slave Units Specifications* for details on Input and Output Slaves' delay times.
2. Refer to *Refresh Time* on page 307 and the PLC's Operation Manual for details on the PLC's peripheral servicing cycle time. (See under *Synchronous Operation*.)

CS1H/G, C200HS, and C200HX/HG/HE (-ZE) PLCs

The following timing charts show the minimum and maximum I/O response times of the DeviceNet Network with a CS1H/G, C200HX/HG/HE(-ZE), or C200HS PLC.

Minimum I/O Response Time

The minimum I/O response time occurs when the Slave's I/O refreshing is executed just after the input signal is received by the Master Unit and the output signal is output at the beginning of the next I/O refresh cycle.

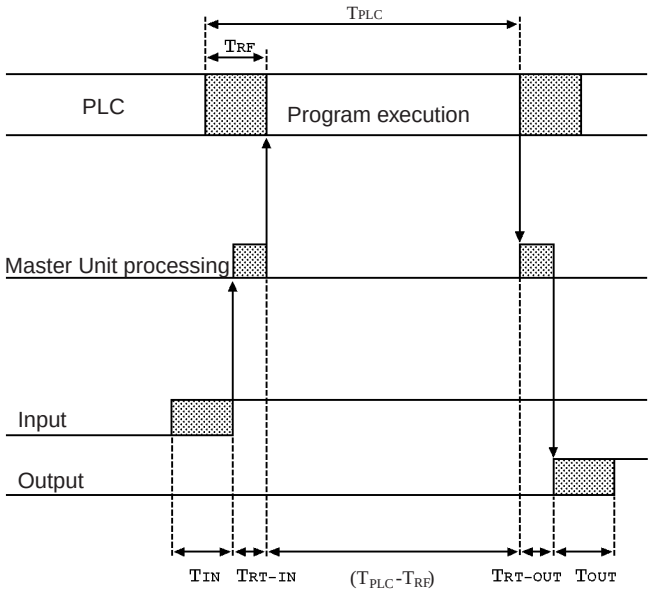

T_{IN}: The Input Slave's ON (OFF) delay (0 used as the minimum value)

T_{OUT}: The Output Slave's ON (OFF) delay (0 used as the minimum value)

$T_{RT\text{-}IN}$: Input Slave's communications time/Slave (See page 306.)

$T_{RT\text{-}OUT}$: Output Slave's communications time/Slave (See page 306.)

T_{PLC}: The PLC's cycle time

T_{RF}: The PLC's DeviceNet Unit refresh time (See page 307.)

The minimum I/O response time (T_{MIN}) is the total of the following terms:

$$T_{MIN} = T_{IN} + T_{RT\text{-}IN} + (T_{PLC} - T_{RF}) + T_{RT\text{-}OUT} + T_{OUT}$$

Note

1. Refer to *SECTION 4 General-purpose Slaves*, *SECTION 5 Environment-resistive and Waterproof Slaves*, and *SECTION 6 Special I/O Slave Units Specifications* for details on Input and Output Slaves' delay times.
2. Refer to *Refresh Time* on page 307 and the PLC's Operation Manual for details on the PLC's peripheral servicing cycle time.

Maximum I/O Response Time

The maximum I/O response time occurs with the I/O timing shown in the following diagram.

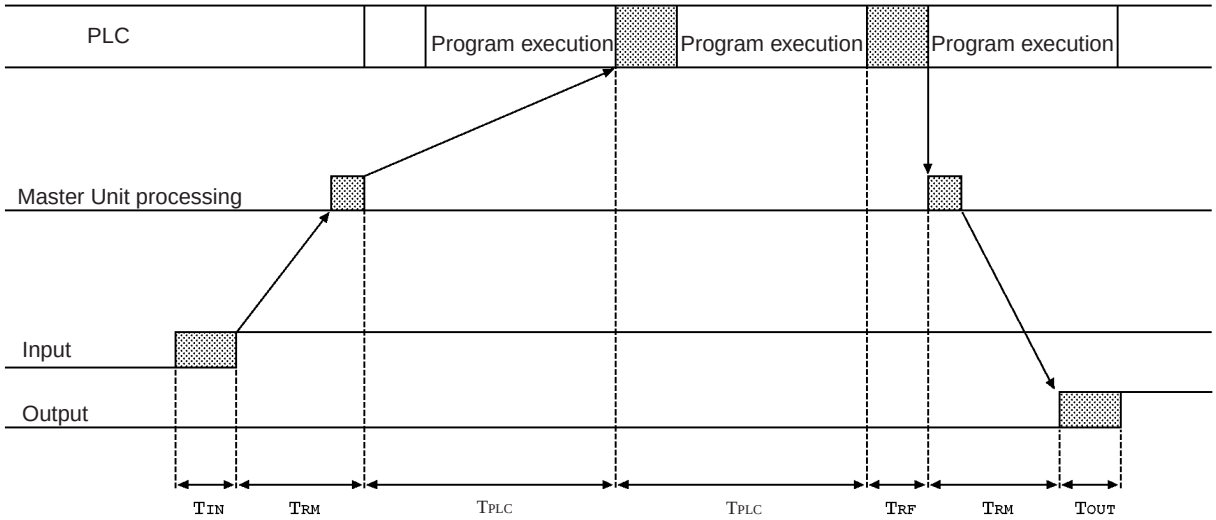

T_{IN}: The Input Slave's ON (OFF) delay

T_{OUT}: The Output Slave's ON (OFF) delay

T_{RM}: The communications cycle time for the total Network (See page 305.)

T_{PLC}: The PLC's cycle time

T_{RF}: The PLC's DeviceNet Unit refresh time (See page 307.)

The maximum I/O response time (T_{MAX}) is the total of the following terms:

$$T_{MAX} = T_{IN} + 2 \times T_{RM} + 2 \times T_{PLC} + T_{RF} + T_{OUT}$$

Note

1. Refer to *SECTION 4 General-purpose Slaves, SECTION 5 Environment-resistive and Waterproof Slaves,* and *SECTION 6 Special I/O Slave Units Specifications* for details on Input and Output Slaves' delay times.
2. Refer to *Refresh Time* on page 307 and the PLC's Operation Manual for details on the PLC's peripheral servicing cycle time.

7-1-2 Communications Cycle Time and Refresh Time

The communications cycle time, communications time for each Slave, and refresh time are explained in this section. All of these are necessary for calculating the time required for various processes in a DeviceNet Network.

Communications Cycle Time

The communications cycle time is the time from the completion of a Slave's remote I/O communications processing until remote I/O communications with the same Slave are processed again. The communications cycle time is used to calculate the maximum I/O response time.

The communications cycle time depends on the number of Masters on the Network and on whether or not message communications are being performed. The following equations are valid when there is only one Master Unit. For details on cycle time equations for multiple Master Units, refer to *page 307*.

One Master in Network

The following equations show the communications cycle time (T_{RM}) when there is only one Master in the Network. Even if the equation result is less than 2 ms, the minimum communications cycle time (T_{RM}) is 2 ms.

T_{RM} = Σ (Communications time for each Slave)
+ MULTIPLE I/O TERMINAL processing time
+ Explicit messages processing time
+ 0.01 × N + 1.0 [ms]

Communications time for each Slave: Time required for each Slave
Σ (Communications time for each Slave) is the total of the processing time of each Slave in the network.

MULTIPLE I/O TERMINAL processing time:
3.5 [ms]
Only when Slaves with input, output, or mixed I/O of more than 8 bytes exist.

Explicit messages processing time:
$0.11 \times T_B + 0.6$ [ms]
Explicit message communications execution time
T_B: Baud rate factor
(500 kbps: $T_B = 2$; 250 kbps: $T_B = 4$; 125 kbps: $T_B = 8$)

N: Number of Slaves

Communications Time for each Slave

The following equations show the communications time per Slave (T_{RT}) for each kind of Slave Unit.

Output Slaves with 8 Bytes of Output Max.

$T_{RT} = 0.016 \times T_B \times S_{OUT1} + 0.11 \times T_B + 0.07$ [ms]

S_{OUT1}: The number of Output Slave output words
T_B: The baud rate
(500 kbps: $T_B = 2$; 250 kbps: $T_B = 4$; 125 kbps: $T_B = 8$)

Input Slaves with 8 Bytes of Input Max.

$T_{RT} = 0.016 \times T_B \times S_{IN1} + 0.06 \times T_B + 0.05$ [ms]

S_{IN1}: The number of Input Slave input words
T_B: The baud rate
(500 kbps: $T_B = 2$; 250 kbps: $T_B = 4$; 125 kbps: $T_B = 8$)

Mixed I/O Slaves with 8 Bytes of I/O Max.

$T_{RT} = 0.016 \times T_B \times (S_{OUT2} + S_{IN2}) + 0.11 \times T_B + 0.07$ [ms]

S_{OUT2}: The number of Mixed I/O Slave output words
S_{IN2}: The number of Mixed I/O Slave input words
T_B: The baud rate
(500 kbps: $T_B = 2$; 250 kbps: $T_B = 4$; 125 kbps: $T_B = 8$)

Input Slaves, Output Slaves, or Mixed I/O Slaves with Over 8 Bytes of I/O

$T_{RT} = T_{OH} + T_{BYTE\text{-}IN} \times B_{IN} + T_{BYTE\text{-}OUT} \times B_{OUT}$ [ms]

T_{OH}: The protocol overhead
$T_{BYTE\text{-}IN}$: The input byte transmission time
B_{IN}: The number of input bytes
$T_{BYTE\text{-}OUT}$: The output byte transmission time
B_{OUT}: The number of output bytes

Baud rate	T_{OH}	$T_{BYTE\text{-}IN}$	$T_{BYTE\text{-}OUT}$
500 kbps	0.306 ms	0.040 ms	0.036 ms

Baud rate	T_{OH}	$T_{BYTE-IN}$	$T_{BYTE-OUT}$
250 kbps	0.542 ms	0.073 ms	0.069 ms
125 kbps	1.014 ms	0.139 ms	0.135 ms

The number of output bytes (B_{OUT}) for Input Slaves is 0, and the number of input bytes (B_{IN}) for Output Slaves is 0.

Refresh Time

The refresh time is the time required for I/O data to be exchanged between the PLC's CPU Unit and the DeviceNet Master Unit. The PLC's cycle time is increased when a Master Unit is mounted, as shown below.

Note Refer to the PLC's Operation Manual for more details on the refresh time and the PLC's cycle time.

Master Unit for CV-series PLCs (CVM1-DRM21)

The PLC's cycle time is increased by 1.1 ms. This is the extra time required for CPU Bus Unit servicing (DeviceNet Master Unit refreshing).

Master Unit for CS1H/G, C200HX/HG/HE (-ZE), and C200HS PLCs (C200HW-DRM21)

The PLC's cycle time is increased by the amount shown below. The extra time is required for I/O refreshing.

PLC	DeviceNet Unit I/O refreshing time (ms)
CS1H/G and C200HX/HG/HE (-ZE)	1.72 + 0.022 × the number of words refreshed
C200HS	2.27 + 0.077 × the number of words refreshed

The number of words refreshed is the total number of words in the I/O Area that are used by the Slaves, including any unused words between words actually used by the Slaves. For example, if there are only two Input Slaves with node addresses 1 and 5, the 5 input words for nodes 1 through 5 would be refreshed even though the input words for nodes 2, 3, and 4 are unused.

If message communications are being performed, just add the number of words used in message communications to the above number of words for whenever messages are being processed.

C200H I/O Link Unit

The PLC's cycle time is increased by the amount shown below when a C200H I/O Link Unit is mounted to the PLC. The extra time is required for I/O refreshing.

Additional processing time (ms)
1.72 + 0.022 × the number of words refreshed

The number of words refreshed is the total number of words allocated to the Read/Write Area.

If message communications are being performed, just add the number of words used in message communications to the above number of words for whenever messages are being processed.

7-1-3 More than One Master in Network

The following equation shows the remote I/O communications cycle time (T_{RM}) when there is more than one Master in the Network and message communications are not being performed. An example for two Master Units is used.

First, the Network is divided into two groups: Master A and the Slaves in remote I/O communications with it and Master B and the Slaves in remote I/O communications with it.

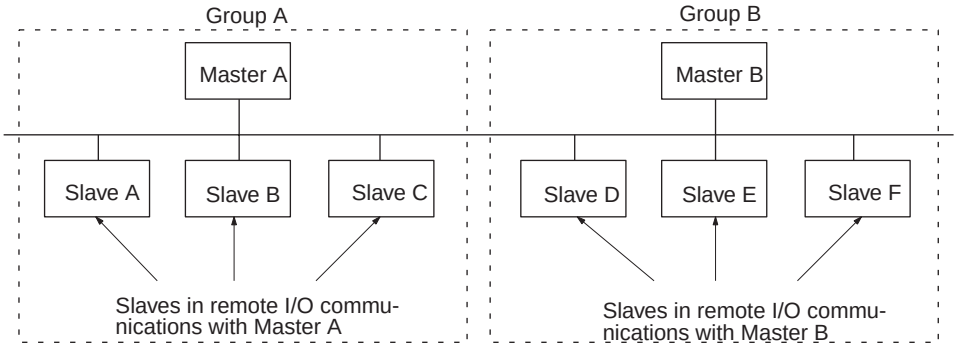

Note Although in the above diagram the Slaves are separated into two groups for convenience, the actual physical positions in the Network are irrelevant.

Next, we can refer to the previous equations and calculate the communications cycle time for each group as if they were separate Networks.

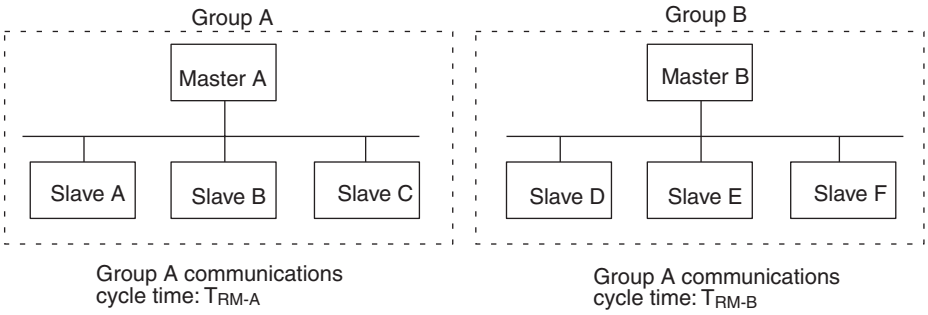

In Networks with two Masters, the communications cycle time for the entire Network will be the sum of the communications cycle times for the groups.

$$T_{RM} = T_{RM-A} + T_{RM-B}$$

Although this example shows only two Masters in the Network, the total communications cycle time for any Network can be calculated by dividing it into groups and adding the communications cycle times of all groups.

7-1-4 System Startup Time

This section describes the system startup time for a Network operating with the scan list enabled. The system startup time is the delay from the time that the Master Unit is turned ON until remote I/O communications begin. Here, we assume that the scan list is enabled and that remote I/O communications are set to start automatically at startup.

System Startup Times

The following table shows the system startup times for two cases. In the first case, the Master Unit starts up just after all of the Slaves' power supplies are turned ON. In the second case, the Master Unit is restarted while communications are in progress.

Case	Slave's indicator status	System startup time
The Master is started just after Slave startup.	The NS indicator is OFF or flashing green.	6 seconds

Case	Slave's indicator status	System startup time
The Master only is restarted.	The NS indicator flashes red while the Master is OFF.	8 seconds
The Slaves only are restarted.	---	10 seconds

Program Example

As shown in the preceding table, it takes time for DeviceNet communications to start up. This programming uses flags in the Master Status Area to prevent the Slaves' I/O processing from being performed until remote I/O communications start up.

Note Refer to the Master Unit's *Operation Manual* for details on the Master Status Area 1.

This programming is for a CV-series PLC and a Master Unit with a unit number of 00.

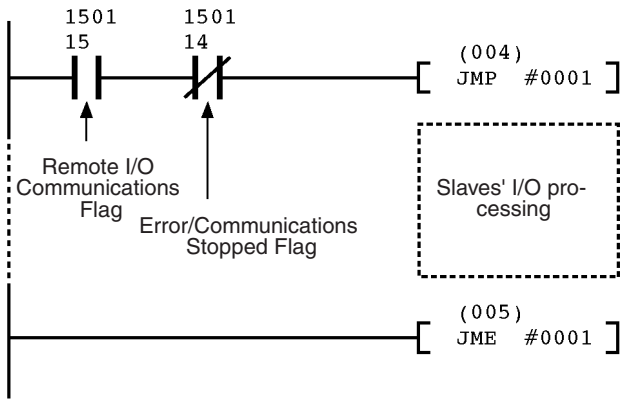

7-2 Message Communications Time

The message communications time is the time required from the time a Master Unit starts to send a message over the Network to another node until the Master Unit completes sending the message (data for SEND(192)/RECV(193) and FINS commands for CMND(194)/IOWR).

If the CPU Unit attempts to send another message or receives a message from another node within the message communications time, the second message or the message being received from another node may be destroyed. Never execute a second communications instruction before the message communications time has elapsed and never send messages to any one node at intervals less than the message communications time.

Note

1. If send or receive messages are destroyed, error records will be placed in the error history of the Master Unit. If an error occurs, read the error history using the FINS command or monitor the error history from the Configurator.
2. The following equations can be used to find the approximate message communications time, but this is a typical time, not the maximum time. The message communications time will vary depending on the frequency of message communications, the load on the remote node, the communications cycle time, and other factors. For any one Master Unit, the message communications time can be greatly increased due to heavy loads and the user program must be written to allow for this.

The following equation can be used to compute the approximate message communications time.

Message communications time =

Communications cycle time × ((No. of message bytes + 15) ÷ 6 + 1)

No. of message bytes: No. of data bytes following the FINS command code

The communications cycle time depends on whether or not remote I/O communications are being used.

No Remote I/O Communications

The following equation can be used to compute the message communications time when remote I/O communications are not being used.

Message communications time =

2 ms (see note) + 0.11 × T_B + 0.6 [ms]

T_B: The baud rate

(500 kbps: T_B = 2; 250 kbps: T_B = 4; 125 kbps: T_B = 8)

Note The minimum remote I/O communications cycle time is 2 ms even if remote I/O communications are not being used.

Remote I/O and Message Communications

Performing message communications in addition to remote I/O communications will increase the message communications time.

Message communications time=

Communications cycle time for remote I/O communications only + 0.11 × T_B + 0.6 [ms]

T_B: The baud rate

(500 kbps: T_B = 2; 250 kbps: T_B = 4; 125 kbps: T_B = 8)

SECTION 8
Troubleshooting and Maintenance

This section describes error processing, periodic maintenance operations, and troubleshooting procedures needed to keep the DeviceNet Network operating properly. We recommend reading through the error processing procedures before operation so that operating errors can be identified and corrected more quickly.

8-1 Indicators and Error Processing 312
8-1-1 Errors Occurring in the Slave Unit 312
8-1-2 C200H I/O Link Unit Seven-segment Display 312
8-2 Troubleshooting 313
8-2-1 Slave Unit Troubleshooting 313
8-2-2 Analog Input Unit Troubleshooting 315
8-2-3 Temperature Input Terminal Troubleshooting 316
8-2-4 C200H I/O Link Unit Troubleshooting 316
8-2-5 RS-232C Unit Troubleshooting 318
8-3 Maintenance 318
8-3-1 Cleaning 318
8-3-2 Inspection 318
8-3-3 Replacing Nodes 319

8-1 Indicators and Error Processing

8-1-1 Errors Occurring in the Slave Unit

The following table lists probable causes and remedies for errors that occur in the Slave Unit.

Display/Indicator status		Network status	Probable cause and remedy
MS	NS		
ON (green)	ON (green)	Remote I/O or message communications in progress (normal status)	Remote I/O communications and/or message communications are active on the Network.
ON (green)	OFF	Checking for node address duplication	Checking whether the Unit's node address has been set on another node.
ON (green)	Flashing (green)	Waiting for connection	The Unit is waiting for a connection from the Master Unit.
ON (red)	OFF	Watchdog timer error	A watchdog timer error occurred in the Unit. Replace the Unit.
Flashing (red)	OFF	Incorrect switch settings	A mistake has been made in the switch settings. Check the settings and restart the Slave.
ON (green)	ON (red)	Node address duplication	The Slave Unit's node address has been set on another node. Change the settings to eliminate the duplication and restart the Slave.
ON (green)	ON (red)	Bus Off error detected	The communications controller detected a Bus Off status and communications have been stopped. Check the following and restart the Slave: Master/Slave baud rates, for loose or broken cables, for noise, cable lengths, and Terminating Resistors.
ON (green)	Flashing (red)	Communications timeout	The connection with the Master Unit timed out. Check the following and restart the Slave: Master/Slave baud rates, for loose or broken cables, for noise, cable lengths, and Terminating Resistors.

8-1-2 C200H I/O Link Unit Seven-segment Display

C200H I/O Link Units have a 2-digit, 7-segment display that normally indicates the C200H I/O Link Unit's node address (decimal value from 00 to 63). When an error occurs, the display will alternate between the error code and the node address of the faulty C200H I/O Link Unit. If more than one error occurs at the same time, the error codes will be displayed in sequence, followed at the end by the faulty Unit's node address.

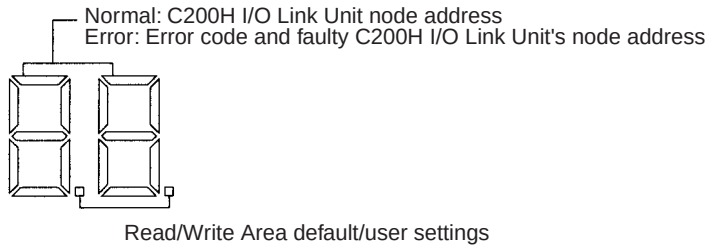

Dot Indicators

The dots at the lower-right of each digit are operated by bit 13 (Read/Write Area default setting) of the Status Area (first word of the IR Area + 5 words), and show whether user settings or default settings are being used for the Read/Write Area. The dots are lit when the default settings are used and not lit when the user settings are used.

Seven-segment Display

The 7-segment digits show the C200H I/O Link Unit's node address during normal operation, but alternate between the error code and the Unit's node address when an error occurs. The following table outlines the operation of the display.

Status		Display	
Error	Watchdog timer	Not lit	
	Memory or system error	Error code only	Lit
	Other errors	Error code and error node address alternate (see diagram below)	

The following diagram illustrates the alternating display of the error code and error node address.

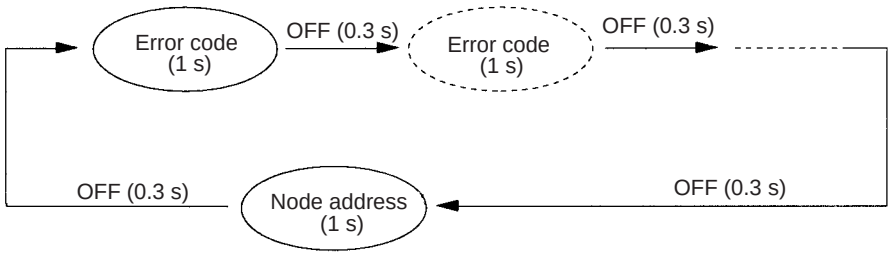

If more then one error occurs at the same time, each error code will be displayed in sequence, followed at the end by the error node address.

8-2 Troubleshooting

8-2-1 Slave Unit Troubleshooting

Red Indicator (ON or Flashing)

Use the following table to troubleshoot problems in a Slave that has a red indicator that is ON or flashing.

Error	Probable cause
The MS indicator is a constant red.	The Slave Unit is faulty. Replace the Unit.
The MS indicator is flashing red.	• Check that the Slave's baud rate setting is correct. The setting must be 125 kbps, 250 kbps, or 500 kbps. Restart the Unit after changing the baud rate. • Replace the Unit if the MS indicator continues to flash red even though the baud rate setting is correct.

Error	Probable cause
After the MS indicator turns green, the NS indicator does not flash green - it turns red immediately.	Restart the faulty Slave Unit after checking the following points. • Make sure that the Master and Slaves baud rate settings all match. If they do not match, set all of the baud rates to the same value. • Check for a node address duplication. If necessary change the node address settings so that each node has a unique number. • See the troubleshooting steps below under the error heading: "The NS indicator lights green but turns red after a short time." • Check whether all of the Slaves' settings are correct. • If a particular Slave's NS indicator is always red, replace that Slave.
The NS indicator lights green but turns red after a short time **or** The NS indicator lights green but starts flashing red after a short time.	• Restart the faulty Slave Unit after checking the following points. • Make sure that there are 121-Ω Terminating Resistors connected at both ends of the trunk line. Connect 121-Ω Terminating Resistors if the wrong resistance is being used. • Check whether all of the Slaves' settings are correct. • Check whether the communications cables are connected properly. • Check whether the power supply is set correctly. • Check all the nodes for broken wires in the communications and power supply cables attached to the connectors. • Check whether power is correctly supplied to the network. • If there is nearby equipment that generates electrical noise, take steps to shield the Master, Slaves, and communications cables from the noise. • If an error has occurred with an OMRON Master Unit, refer to the Master Unit's *Operation Manual*. If an error has occurred in a Master Unit supplied by another maker, refer to the relevant operation manual. • If a particular Slave's NS indicator is always red, replace that Slave.

Trouble Adding a Slave to the Network

Use the following table to troubleshoot problems in adding a Slave to the network.

Error	Probable cause
The NS indicator remains OFF.	• Check if the baud rate of the Master Unit coincides with that of the Slave Unit. If the baud rates are different, correct the baud rate of the Slave Unit. • Check that the Slave's connector is connected correctly. • Check whether the communications power supply is supplying 24 V DC. • Make sure that the Master is operating properly. When using an OMRON Master, refer to the Master Unit's *Operation Manual*. When using another company's Master Unit, refer to that Master's user's manual. • Check whether the communications cables are connected properly. • Check whether the power supply is set correctly. • Check for broken wires in the communications and power supply cables attached to the connectors.

Error	Probable cause
The NS indicator continues to flash green.	• Make sure that the Master is operating properly. When using an OMRON Master, refer to the Master Unit's *Operation Manual*. When using another company's Master Unit, refer to that Master's operation manual. • Check whether the Slave is registered in the Master's scan list. If an OMRON Master Unit is being used, a new Slave cannot be added to the network if the Master is operating with the scan list enabled. First perform the clear scan list operation, check that the Slave has joined the network, and then perform the create scan list operation. If another company's Master Unit is being used, refer to that Master's operation manual for details on adding a new Slave to its scan list.
The NS indicator alternates between being green and flashing green, or alternates between flashing red and flashing green.	• When using an OMRON Master, check the following items and perform the necessary error processing steps. → Register the scan list again. (After performing the clear scan list operation, check that the Slave has joined the network and perform the create scan list operation.) → Make sure that the Slave's allocated I/O area does not overlap with that of another Slave. If there is an overlap, change the Slave's node address to eliminate it. → Make sure that the allocated I/O area does not exceed the allowed range shown below: C200HW-DRM21-V1 Output: IR 050 to IR 099 Input: IR 350 to IR 399 If the I/O area exceeds this range, change the Slave's node address to correct the problem. • When using another company's Master Unit, check that the I/O size registered in the Master's scan list matches the actual I/O size of the Slave. The I/O size is recorded in the following attributes of the connection object: Interface 2 (Polled I/O Connection) Produced Connection size (Input size) Consumed Connection size (Output size) and: Interface 3 (Bit strobed I/O Connection) Produced Connection size (Input size) See *Appendix B Slave Device Protocol* for details and register the correct value in the Master's scan list. Refer to the Master's manual for details on registering the values.

8-2-2 Analog Input Unit Troubleshooting

DRT1-AD04

Error	Probable cause
The AD converted data is FFFF.	The Analog Input Terminal's open-circuit detection function is activated when the input range is set to 1 to 5 V and the voltage drops below 0.8 V or the input range is set to 4 to 20 mA and the current drops below 3.2 mA. The converted data is set to FFFF when the open-circuit detection function is activated. Check the Analog input's cables for broken wires or incorrect wiring. When the input signal rises above 0.8 V or 3.2 mA, the converted data will automatically return to its normal range.

DRT1-AD04H

Error	Probable cause
The AD converted data is 7FFF when the disconnection indicator is lit.	The Analog Input Terminal's open-circuit detection function is activated when the input range is set to 1 to 5 V and the voltage drops below 0.8 V or the input range is set to 4 to 20 mA and the current drops below 3.2 mA. The converted data is set to FFFF when the open-circuit detection function is activated. The disconnection indicator will be lit at the same time. Check the Analog input's cables for broken wires or incorrect wiring. When the input signal rises above 0.8 V or 3.2 mA, the converted data will automatically return to its normal range. The disconnection indicator will go out at the same time.

8-2-3 Temperature Input Terminal Troubleshooting

Use the following table to troubleshoot problems in the Temperature Input Terminal.

Error	Probable cause
The temperature data is 7FFF when the disconnection indicator is lit.	Check the temperature sensor cables for broken wires or incorrect wiring. Check that input cables are wired properly. Check that the cold junction compensator is connected properly (applicable to the DRT1-TS04T only).

8-2-4 C200H I/O Link Unit Troubleshooting

When an error occurs in the C200H I/O Link Unit and the error code is displayed by the 7-segment display, use the following table to troubleshoot the problem. If the error code is not shown on the 7-segment display, use the table under the heading *Identifying Errors from Symptoms* to troubleshoot the problem.

Identifying Errors from Seven-segment Display

Display	Probable cause	Possible remedy
C0	Attempt was made to set the Link Area when the PLC is not in PROGRAM mode.	1.Turn OFF bit 00 of the software switches. 2.Switch the PLC's operating mode to PROGRAM mode. 3.Turn ON bit 00 of the software switches again.
C3	Invalid setting values in Link Area.	1.Turn OFF bit 00 of the software switches. 2.Check the area settings, address settings, and size settings, and correct if necessary. 3.Turn ON bit 00 of the software switches again.
D9	Timeout error in communications with Master Unit. • The Master Unit is not operating. • The cables are not connected properly. • A source of noise is close to the Master Unit.	1.Check the status of the Master Unit. 2.Check that the DeviceNet communications cables are connected properly and that noise preventative measures have been taken. 3.If the error is not cleared after taking the above steps, restart the Unit.
E0	The Network's communications power is not being supplied normally.	Check the Network's power supply and wiring, and restart the Unit.
E4	The Unit's Read/Write Area is set to default settings with other Communications Units connected.	1.Check that the area address settings for the SYSMAC BUS Masters, DeviceNet Masters, and DeviceNet Slaves are not overlapping. 2.Set the Read/Write Area settings using bit 00 of the software switches. (If the settings are overlapping intentionally, the Unit will operate according to the Read/Write Area settings after setting this bit.) 3.Restart the Unit.
E6	The CPU Unit is mounted to a C200H or C200HS PLC.	Remount the CPU Unit to a C200HE, C200HG, or C200HX PLC, and restart the PLC.

Display	Probable cause	Possible remedy
E8	Internal non-volatile memory data error	1.Set the Read/Write Area settings using bit 00 of the software switches. 2.Restart the Unit. 3.If the error is not cleared, replace the Unit.
F0	Duplicate node address error	Reset the node address to a number that is not used by another Unit, and restart the Unit.
F1	Bus Off error	1.Check that the DeviceNet communications cables are wired connected, and that noise preventative measures have been taken. 2.Restart the Unit.
	Master Unit baud rate setting error	Make sure that the baud rate settings match and restart the Unit.
F3	Front/rear-panel DIP switch setting error • Pin 4 of front-panel DIP switch is ON. • Pins 1 and 2 of front-panel DIP switch are ON. • Pin 7 or 8 on rear-panel DIP switch is ON.	• Make sure pin 4 on the front panel, and pins 7 and 8 on the rear panel are turned OFF. • Turn ON or OFF pins 1 and 2 according to the correct baud rate setting.
F6	CPU Unit interface error from noise	Remove cause of noise and restart the Unit. If the error is not cleared, replace the C200H I/O Link Unit or the CPU Unit.
F9	Hardware error	1.Restart the Unit 2.If the error is not cleared, replace the Unit.

Identifying Errors from Symptoms

Symptom	Probable Cause	Possible remedy
The power is ON, but the Slave Unit's indicators are all OFF.	CPU Unit error caused by noise interference.	Restart the Unit.
The Read/Write Area's settings have been set, but data is not being refreshed according to the settings.	The settings have not been validated.	1.Turn ON bit 00 of the software switches. 2.Reset the Unit.
	The Unit has not been reset.	Restart the PLC or turn ON and OFF the Unit's Restart Bit. With C200HX/HG/HE PLCs, these bits are in AR 01. With CS-series PLCs, these bits are in words A502 to A507.
After setting the areas and operating the Unit, the data in the output area frequently appears as unexpected values.	The area settings are overlapping with those of other Communications Units.	Check the area settings of other Communications Units, and correct settings so that data is not written to an area already being used by another Unit.
When reading the Slave's DM Area from the Master, unstable values are returned and the data is unreadable.	Attempt was made to access of words from DM 4096 onwards in the C200HE-CPU11 CPU Unit.	Access the correct words only.
The Explicit Connection Established Flag is ON in the C200H I/O Link Unit's status words, but Unit is not receiving an explicit message from the Master.	The Network cables are disconnected, or the Master Unit's power supply is OFF. (OMRON Master Units do not have timeouts when explicit message communications are used, so the Explicit Connection Established Flag will not turn OFF even if communications are stopped).	Restart the Master Unit, or connect the cables correctly. (Timeouts cannot be set for OMRON Master Units using explicit message communications.)

8-2-5 RS-232C Unit Troubleshooting

Symptom	Probable cause	Possible remedy
The RS-232C Unit's ERR indicator is lit.	The RS-232C Unit is damaged.	Replace the RS-232C Unit.
RS-232C port communications error (the Unit's RD and SD indicators are not lit).	The wiring is incorrect, or the cables are not connected properly.	Check the wiring with the RS-232C Unit and correct it if necessary.
	The RS-232C port's parameters do not match those of the RS-232C Unit.	Reset the RS-232C port's parameters to match the parameters of the RS-232C Unit.
Parameter Error Flag (bit 01 or 09) in communications status word is ON.	The parameters are set incorrectly.	Reset the parameters correctly using the PARAMETER SET command, then execute the RS-232C PORT RESET command or restart the RS-232C Unit.
Parity Error Flag (bit 04 or 12) in communications status word is ON.	The parity setting does not match the setting in the RS-232C Unit.	Reset the RS-232C port's parity setting to match the parity of the RS-232C Unit.
Overrun Error Flag (bit 05 or 13) in communications status word is ON.	The baud rate does not match the setting in the RS-232C Unit.	Reset the RS-232C port's baud rate to match the baud rate of the RS-232C Unit.
Framing Error Flag (bit 06 or 14) in communications status word is ON.	The character block settings (data length, parity, and stop bits) do not match those in the RS-232C Unit.	Reset the RS-232C port's character block (data length, parity, and stop bits) to match the character block of the RS-232C Unit.
Receive Buffer Error Flag (bit 07 or 15) in communications status word is ON.	The receive buffer has overflowed.	The receive buffer for each of the RS-232C Unit's ports is 1,024 bytes. Increase the reading frequency so that the receive buffer does not overflow. If the receive buffer has overflown, execute the RS-232C PORT RESET command or restart the RS-232C Unit.

8-3 Maintenance

This section describes the routine cleaning and inspection recommended as regular maintenance.

8-3-1 Cleaning

Clean the DeviceNet Units regularly as described below in order to keep it in its optimal operating condition.

- Wipe the Unit with a dry, soft cloth for regular cleaning.
- When a spot cannot be removed with a dry cloth, dampen the cloth with a neutral cleanser, wring out the cloth, and wipe the Unit.
- A smudge may remain on the Unit from gum, vinyl, or tape that was left on for a long time. Remove the smudge when cleaning.

⚠ **Caution** Never use volatile solvents such as paint thinner or benzene or chemical wipes. These substances could damage the surface of the Unit.

8-3-2 Inspection

Be sure to inspect the system periodically to keep it in its optimal operating condition. In general, inspect the system once every 6 to 12 months, but inspect more frequently if the system is used with high temperature or humidity or under dirty/dusty conditions.

Inspection Equipment

Prepare the following equipment before inspecting the system.

Required Equipment

Have a standard and phillips-head screwdriver, multimeter, alcohol, and a clean cloth.

Equipment that May be Required

Depending on the system conditions, a synchroscope, oscilloscope, thermometer, or hygrometer (to measure humidity) might be needed.

Inspection Procedure

Check the items in the following table and correct any items that are below standard.

Item		Standard	Equipment
Environmental conditions	Ambient and cabinet temperature	See below.	Thermometer
	Ambient and cabinet humidity	See below.	Hygrometer
	Dust/dirt accumulation	None	---
Installation	Are the Units installed securely?	No looseness	---
	Are the communications connectors fully inserted?	No looseness	---
	Are the external wiring screws tight?	No looseness	---
	Are the connecting cables undamaged?	No damage	---

8-3-3 Replacing Nodes

The DeviceNet Master Unit and Slave Units make up the network. The entire network is affected when a Unit is faulty, so a faulty Unit must be repaired or replaced quickly. We recommend having spare Units available to restore network operation as quickly as possible.

Precautions

Observe the following precautions when replacing a faulty Unit.

- After replacement make sure that there are no errors with the new Unit.
- When a Unit is being returned for repair, attach a sheet of paper detailing the problem and return the Unit to your OMRON dealer.
- If there is a faulty contact, try wiping the contact with a clean, lint-free cloth dampened with alcohol.

Settings after Replacing Nodes

After replacing a Unit, set the new Unit's switches to the same settings that were on the old Unit.

Appendix A

Node Address Settings Table

This appendix shows all of the node address settings for Slaves that have node addresses set in binary with pins 1 through 6 of the Slave's DIP switch. There are some differences in the location and orientation of the DIP switches, but the node address is always set in binary.
(0: OFF, 1: ON)

DIP switch setting						Node address
Pin 1	Pin 2	Pin 3	Pin 4	Pin 5	Pin 6	
0	0	0	0	0	0	0
1	0	0	0	0	0	1
0	1	0	0	0	0	2
1	1	0	0	0	0	3
0	0	1	0	0	0	4
1	0	1	0	0	0	5
0	1	1	0	0	0	6
1	1	1	0	0	0	7
0	0	0	1	0	0	8
1	0	0	1	0	0	9
0	1	0	1	0	0	10
1	1	0	1	0	0	11
0	0	1	1	0	0	12
1	0	1	1	0	0	13
0	1	1	1	0	0	14
1	1	1	1	0	0	15
0	0	0	0	1	0	16
1	0	0	0	1	0	17
0	1	0	0	1	0	18
1	1	0	0	1	0	19
0	0	1	0	1	0	20
1	0	1	0	1	0	21
0	1	1	0	1	0	22
1	1	1	0	1	0	23
0	0	0	1	1	0	24
1	0	0	1	1	0	25
0	1	0	1	1	0	26
1	1	0	1	1	0	27
0	0	1	1	1	0	28
1	0	1	1	1	0	29
0	1	1	1	1	0	30
1	1	1	1	1	0	31

DIP switch setting						Node address
Pin 1	Pin 2	Pin 3	Pin 4	Pin 5	Pin 6	
0	0	0	0	0	1	32
1	0	0	0	0	1	33
0	1	0	0	0	1	34
1	1	0	0	0	1	35
0	0	1	0	0	1	36
1	0	1	0	0	1	37
0	1	1	0	0	1	38
1	1	1	0	0	1	39
0	0	0	1	0	1	40
1	0	0	1	0	1	41
0	1	0	1	0	1	42
1	1	0	1	0	1	43
0	0	1	1	0	1	44
1	0	1	1	0	1	45
0	1	1	1	0	1	46
1	1	1	1	0	1	47
0	0	0	0	1	1	48
1	0	0	0	1	1	49
0	1	0	0	1	1	50
1	1	0	0	1	1	51
0	0	1	0	1	1	52
1	0	1	0	1	1	53
0	1	1	0	1	1	54
1	1	1	0	1	1	55
0	0	0	1	1	1	56
1	0	0	1	1	1	57
0	1	0	1	1	1	58
1	1	0	1	1	1	59
0	0	1	1	1	1	60
1	0	1	1	1	1	61
0	1	1	1	1	1	62
1	1	1	1	1	1	63

Appendix B

Using Another Company's Master Unit

This appendix explains how to operate an OMRON Slave when the Slave is connected to a Master manufactured by another company.

Use Poll Connection with Output Slaves

If the Slave has outputs, do not communicate with the Master through a bit strobe connection.
There are several DeviceNet I/O communications methods, including poll and bit strobe connections, but DeviceNet specifications allow the bit strobe connection with inputs only. OMRON Master Units conform to these specifications and communicate with Output Slaves through a poll connection, but some other company's Masters allow bit strobe connections with Output Slaves. Before connecting an OMRON Slave to another company's Master, verify the Master's connection specifications.

About EDS Files

When connecting an OMRON Slave to another company's Master, it may be necessary to install the OMRON Slave's EDS file in the other company's configurator to set the Slave's information in the Master. With some companies' Masters, the Slaves can be connected without making settings.

With some other companies' configurators, installing the OMRON Slave's EDS file in the configurator will allow you to make various parameter settings from the configurator.

If you can't obtain a copy of the EDS file or the other company's configurator does not support EDS files, it will be necessary to directly input settings such as the connection type and data size.

Installing an EDS File

EDS files are provided by the manufacturer for each Slave and contain settings such as the Slave's ID and I/O data sizes. If the EDS file is installed in the configurator, the Slave's settings can be changed and the I/O size will be input automatically when the Master's scan list is created.

EDS files for the Slaves described in this manual can be downloaded from the product catalog at the following website:

http://www.odva.astem.or.jp

Locate the EDS file for the desired Slave and install that EDS file in the configurator. Installation procedures vary; refer to the configurator's manuals for details on the installation procedure.

Inputting Settings Directly

If you can't obtain a copy of the EDS file or the other company's configurator does not support EDS files, it will be necessary to directly input settings such as the connection type and data size. (Always select the connection type that is supported by the Slave.)

The following connection types are allowed in DeviceNet communications.

Connection type	Operation	Remarks
poll	Data is exchanged in individual command/ response transmissions from the Master to each Slave. The output data is transferred in commands and the input data is received in responses.	---
bit strobe	The Master broadcasts a command and multiple Slaves return input data in their responses.	The command is sent just once, so the cycle time is short, however this method supports a maximum of 8 bytes of input data from Slaves.
change of state (COS)	Data is transmitted when the data has changed in the Master or Slave.	Data is transmitted only when there has been a change. Devices that do not need to communicate will not communicate, so the network usage is more efficient.
cyclic	The Master and Slaves transmit input/output data cyclically (at fixed intervals).	---

Table of Connection Type and Data Size Settings

The following table lists the I/O data sizes for each OMRON Slave as well as the supported connection types. (A "Yes" indicates that the connection is supported; a "No" indicates that it is not.)

Slave group	Model	Connection type				Data sizes	
		poll	bit strobe	change of state	cyclic	IN	OUT
Transistor Remote I/O Terminals	DRT1-ID08	Yes	Yes	No	No	1	0
	DRT1-ID08-1	Yes	Yes	No	No	1	0
	DRT1-ID16	Yes	Yes	No	No	2	0
	DRT1-ID16-1	Yes	Yes	No	No	2	0
	DRT1-OD08	Yes	No	No	No	0	1
	DRT1-OD08-1	Yes	No	No	No	0	1
	DRT1-OD16	Yes	No	No	No	0	2
	DRT1-OD16-1	Yes	No	No	No	0	2
	DRT1-MD16	Yes	No	No	No	1	1
Transistor Remote I/O Terminals with 3-tier I/O Terminal Blocks	DRT1-ID16T	Yes	Yes	No	No	2	0
	DRT1-ID16T-1	Yes	Yes	No	No	2	0
	DRT1-ID16TA	Yes	Yes	No	No	2	0
	DRT1-ID16TA-1	Yes	Yes	No	No	2	0
	DRT1-OD16T	Yes	No	No	No	0	2
	DRT1-OD16T-1	Yes	No	No	No	0	2
	DRT1-OD16TA	Yes	No	No	No	0	2
	DRT1-OD16TA-1	Yes	No	No	No	0	2
	DRT1-MD16T	Yes	No	No	No	1	1
	DRT1-MD16T-1	Yes	No	No	No	1	1
	DRT1-MD16TA	Yes	No	No	No	1	1
	DRT1-MD16TA-1	Yes	No	No	No	1	1
Transistor Remote I/O Terminals with Connectors	DRT1-ID32ML	Yes	Yes	No	No	4	0
	DRT1-ID32ML-1	Yes	Yes	No	No	4	0
	DRT1-OD32ML	Yes	No	No	No	0	4
	DRT1-OD32ML-1	Yes	No	No	No	0	4
	DRT1-MD32ML	Yes	No	No	No	2	2
	DRT1-MD32ML-1	Yes	No	No	No	2	2
Remote Adapters	DRT1-ID16X	Yes	Yes	No	No	2	0
	DRT1-ID16X-1	Yes	Yes	No	No	2	0
	DRT1-OD16X	Yes	No	No	No	0	2
	DRT1-OD16X-1	Yes	No	No	No	0	2
Sensor Terminals	DRT1-HD16S	Yes	Yes	No	No	2	0
	DRT1-ND16S	Yes	No	No	No	1	1
Temperature Input Terminals	DRT1-TS04T	Yes	Yes	No	No	8	0
	DRT1-TS04P	Yes	Yes	No	No	8	0
Analog Input Terminals	DRT1-AD04	Yes	Yes	No	No	8	0
	DRT1-AD04H	Yes	Yes	No	No	8	0
Analog Output Terminals	DRT1-DA02	Yes	No	No	No	0	4
CQM1 I/O Link Unit	CQM1-DRT21	Yes	No	No	No	2	2

Slave group	Model	Connection type				Data sizes	
		poll	bit strobe	change of state	cyclic	IN	OUT
Environment-resistive Transistor Terminals	DRT1-ID08C	Yes	Yes	No	No	1	0
	DRT1-HD16C	Yes	Yes	No	No	2	0
	DRT1-HD16C-1	Yes	Yes	No	No	2	0
	DRT1-OD08C	Yes	No	No	No	0	1
	DRT1-WD16C	Yes	No	No	No	0	2
	DRT1-WD16C-1	Yes	No	No	No	0	2
	DRT1-MD16C	Yes	No	No	No	1	1
	DRT1-MD16C-1	Yes	No	No	No	1	1
Waterproof Terminals	DRT1-ID04CL	Yes	Yes	No	No	1	0
	DRT1-ID04CL-1	Yes	Yes	No	No	1	0
	DRT1-ID08CL	Yes	Yes	No	No	1	0
	DRT1-ID08CL-1	Yes	Yes	No	No	1	0
	DRT1-OD04CL	Yes	No	No	No	0	1
	DRT1-OD04CL-1	Yes	No	No	No	0	1
	DRT1-OD08CL	Yes	No	No	No	0	1
	DRT1-OD08CL-1	Yes	No	No	No	0	1
B7AC Interface Unit	DRT1-B7AC	Yes	Yes	No	No	4	0
C200H I/O Link Unit	C200HW-DRT21	Yes	Yes (See note 1.)	No	No	0 to 64 (See note 2.)	0 to 64 (See note 2.)
RS-232C Unit	DRT1-232C2	Yes	Yes	No	No	2	0

Note 1. The bit strobe connection is supported only when the output size is set to 0 bytes and the input size is set to 8 bytes.

2. The data sizes can be changed.

3. The device profiles below contain more detailed DeviceNet specifications if more information needs to be registered in the scan list.

Device Profiles for Regular and Environment-resistive Slaves

The following device profiles contains more detailed DeviceNet specifications for General-purpose and Environment-resistive Slaves if more information needs to be registered in the scan list.l

General data	Compatible DeviceNet Specifications	Volume I - Release 1.3 Volume II - Release 1.3 (See note)	
	Header name	OMRON Corporation	Header ID = 47
	Device protocol name	Slaves: Generic	Protocol number = 0
	Manufacturer catalog number	W347	
	Manufacturer revision	1.0	

Physical conformance data	Network current consumption	40 mA max. (24 V DC) for the following Units: CQM1-DRT21, DRT1-HD16S, DRT1-ND16S, and DRT1-OD08CL
		30 mA max. (24 V DC) for the following Units: DRT1-ID08(-1), DRT1-ID16(-1), DRT1-OD08(-1), DRT1-OD16(-1), DRT1-ID16T(-1), DRT1-OD16T(-1), DRT1-MD16T(-1), DRT1-WD16C(-1), DRT1-MD16C(-1), DRT1-ID16X(-1), DRT1-OD16X(-1), DRT1-AD04, DRT1-AD04H, DRT1-DA02, DRT1-ID08CL(-1), DRT1-ID08C, DRT1-HD16C(-1), DRT1-TS04T, and DRT1-TS04P
		25 mA max. (24 V DC) for the following Units: DRT1-MD16 and DRT1-ID04CL(-1),
		50 mA max. (24 V DC) for the following Units: DRT1-ID16TA(-1), DRT1-OD16TA(-1), DRT1-MD16TA(-1), and DRT1-ID32ML(-1),
		90 mA max. (24 V DC) for the following Unit: DRT1-OD32ML(-1)
		70 mA max. (24 V DC) for the following Units: DRT1-MD32ML(-1) and DRT1-B7AC
		35 mA max. (24 V DC) for the following Unit: DRT1-OD04CL(-1)
	Connector type	Open plug
	Physical insulation	Yes
	Supported indicators	Module, Network
	MAC ID setting	DIP switch
	Default MAC ID	0
	Baud rate setting	DIP switch
	Supported baud rates	125 kbps, 250 kbps, and 500 kbps
Communications data	Predefined Master/Slave connection set	Group 2 only server
	Dynamic connection support (UCMM)	No
	Explicit message fragmentation support	Yes

Note For Analog Input Terminals, Analog Output Terminals, and Temperature Input Terminals, Volume I is 1.2 and Volume II is 1.1.

Object Mounting

Identity Object (0x01)

Object class	Attribute	Not supported
	Service	Not supported

Item		ID content	Get (read)	Set (write)	Value
Object instance	Attribute	1 Vendor	Yes	No	47
		2 Product type	Yes	No	0
		3 Product code	Yes	No	See note 2.
		4 Revision	Yes	No	1.3 (See note 1.)
		5 Status (bits supported)	Yes	No	Bit 0 only
		6 Serial number	Yes	No	Unique for each Unit
		7 Product name	Yes	No	Same as the model name.
		8 State	No	No	---

Item		DeviceNet service	Parameter option
Object instance	Service	05Reset	No
		0EGet_Attribute_Single	No

Note 1. For Analog Input Terminals, Analog Output Terminals, and Temperature Input Terminals, Revision is 1.2.

2. The product code depends on the Slave. Refer to the following table.

Model	Product code
DRT1-ID08	100
DRT1-ID08-1	106
DRT1-ID16	102
DRT1-ID16-1	108
DRT1-OD08	101
DRT1-OD08-1	107
DRT1-OD16	103
DRT1-OD16-1	109
DRT1-MD16	168
DRT1-ID16T	122
DRT1-ID16T-1	125
DRT1-OD16T	124
DRT1-OD16T-1	127
DRT1-MD16T	123
DRT1-MD16T-1	126
DRT1-ID16TA	142
DRT1-ID16TA-1	146
DRT1-OD16TA	144
DRT1-OD16TA-1	148
DRT1-MD16TA	143
DRT1-MD16TA-1	144
DRT1-ID32ML	128
DRT1-ID32ML-1	131
DRT1-OD32ML	129
DRT1-OD32ML-1	132
DRT1-MD32ML	130
DRT1-MD32ML-1	133
DRT1-ID16X	104
DRT1-ID16X-1	110
DRT1-OD16X	105
DRT1-OD16X-1	111
DRT1-HD16S	2
DRT1-ND16S	9
DRT1-TS04T	302
DRT1-TS04P	303
DRT1-AD04	300
DRT1-AD04H	304
DRT1-DA02	301
CQM1-DRT21	50
DRT1-ID04CL	134
DRT1-ID04CL-1	138
DRT1-ID08CL	136

Model	Product code
DRT1-ID08CL-1	140
DRT1-ID08C	112
DRT1-HD16C	120
DRT1-HD16C-1	115
DRT1-OD04CL	135
DRT1-OD04CL-1	139
DRT1-OD08CL	137
DRT1-OD08CL-1	141
DRT1-OD08C	113
DRT1-WD16C	121
DRT1-WD16C-1	116
DRT1-MD16C	114
DRT1-MD16C-1	117
DRT1-B7AC	430

Message Router Object (0x02)

Object class	Attribute	Not supported
	Service	Not supported
Object instance	Attribute	Not supported
	Service	Not supported
Header specification addition		No

DeviceNet Object (0x03)

Object class	Attribute	Not supported
	Service	Not supported

Item		ID content	Get (read)	Set (write)	Value
Object instance	Attribute	1 MAC ID	Yes	No	---
		2 Baud rate	Yes	No	---
		3 BOI	Yes	No	00 (hexadecimal)
		4 Bus Off counter	No	No	---
		5 Allocation information	Yes	No	---
		6 MAC ID switch changed	No	No	---
		7 Baud rate switch changed	No	No	---
		8 MAC ID switch value	No	No	---
		9 Baud rate switch value	No	No	---

Item		DeviceNet service	Parameter option
Object instance	Service	0EGet_Attribute_Single	No
		4BAllocate_Master/Slave_Connection_Set	No
		4CRelease_Master/Slave_Connection_Set	No

Assembly Object (0x04)

Object class	Attribute	Not supported
	Service	Not supported

Item		ID content	Get (read)	Set (write)	Value
Object instance 1 (Instance type Static I/O)	Attribute	1 Number of members in list	No	No	---
		2 Member list	No	No	---
		3 Data	Yes	No	---
		9 Baud rate switch value	No	No	---

Item		DeviceNet service	Parameter option
Object instance 1 (Instance type Static I/O)	Service	0EGet_Attribute_Single	No

Connection Object (0x05)

Object class	Attribute	Not supported
	Service	Not supported
	Max. number of active connections	1

Item	Section	Information	Max. number of instances
Object instance 1	Instance type	Explicit Message	1
	Production trigger	Cyclic	---
	Transport type	Server	---
	Transport class	3	---

Item		ID content	Get (read)	Set (write)	Value
Object instance 1	Attribute	1 State	Yes	No	---
		2 Instance type	Yes	No	00 (hexadecimal)
		3 Transport class trigger	Yes	No	83 (hexadecimal)
		4 Produced connection ID	Yes	No	---
		5 Consumed connection ID	Yes	No	---
		6 Initial comm. characteristics	Yes	No	21 (hexadecimal)
		7 Produced connection size	Yes	No	0D00 (hexadecimal)
		8 Consumed connection size	Yes	No	0D00 (hexadecimal)
		9 Expected packet rate	Yes	Yes	---
		12 Watchdog time-out action	Yes	No	01 (hexadecimal)
		13 Produced connection path length	Yes	No	00 (hexadecimal)
		14 Produced connection path	Yes	No	---
		15 Consumed connection path length	Yes	No	00 (hexadecimal)
		16 Consumed connection path	Yes	No	---
		17 Production inhibit time	Yes	No	00 (hexadecimal)

Item		DeviceNet service	Parameter option
Object instance 1	Service	05Reset	No
		0EGet_Attribute_Single	No
		10Set_Attribute_Single	No

Item	Section	Information	Max. number of instances
Object instance 2	Instance type	Polled I/O	1
	Production trigger	Cyclic	---
	Transport type	Server	---
	Transport class	2	---

Item		ID content	Get (read)	Set (write)	Value
Object instance 2	Attribute	1 State	Yes	No	---
		2 Instance type	Yes	No	01 (hexadecimal)
		3 Transport class trigger	Yes	No	82 (hexadecimal)
		4 Produced connection ID	Yes	No	---
		5 Consumed connection ID	Yes	No	---
		6 Initial comm. characteristics	Yes	No	01 (hexadecimal)
		7 Produced connection size	Yes	No	See note.
		8 Consumed connection size	Yes	No	See note.
		9 Expected packet rate	Yes	Yes	---
		12 Watchdog time-out action	Yes	No	01 (hexadecimal)
		13 Produced connection path length	Yes	No	See note.
		14 Produced connection path	Yes	No	See note.
		15 Consumed connection path length	Yes	No	See note.
		16 Consumed connection path	Yes	No	See note.
		17 Production inhibit time	Yes	No	00 (hexadecimal)

Item		DeviceNet service	Parameter option
Object instance 2	Service	05Reset	No
		0EGet_Attribute_Single	No
		10Set_Attribute_Single	No

Note These values depend on the type of Slave being used. Refer to the following table.

Model	Produced connection size	Consumed connection size	Produced connection path length	Produced connection path	Consumed connection path length	Consumed connection path
DRT1-ID08	01H	00H	6	20_04_24_01_30_03	0	---
DRT1-ID08-1	01H	00H	6	20_04_24_01_30_03	0	---
DRT1-ID16	02H	00H	6	20_04_24_01_30_03	0	---
DRT1-ID16-1	02H	00H	6	20_04_24_01_30_03	0	---
DRT1-OD08	00H	01H	0	---	6	20_04_24_01_30_03
DRT1-OD08-1	00H	01H	0	---	6	20_04_24_01_30_03
DRT1-OD16	00H	02H	0	---	6	20_04_24_01_30_03
DRT1-OD16-1	00H	02H	0	---	6	20_04_24_01_30_03
DRT1-MD16	01H	01H	6	20_04_24_01_30_03	6	20_04_24_01_30_03
DRT1-ID16T	02H	00H	6	20_04_24_01_30_03	0	---
DRT1-ID16T-1	02H	00H	6	20_04_24_01_30_03	0	---
DRT1-OD16T	00H	02H	0	---	6	20_04_24_01_30_03
DRT1-OD16T-1	00H	02H	0	---	6	20_04_24_01_30_03
DRT1-MD16T	01H	01H	6	20_04_24_01_30_03	6	20_04_24_01_30_03
DRT1-MD16T-1	01H	01H	6	20_04_24_01_30_03	6	20_04_24_01_30_03
DRT1-ID16TA	02H	00H	6	20_04_24_01_30_03	0	---
DRT1-ID16TA-1	02H	00H	6	20_04_24_01_30_03	0	---
DRT1-OD16TA	00H	02H	0	---	6	20_04_24_01_30_03
DRT1-OD16TA-1	00H	02H	0	---	6	20_04_24_01_30_03
DRT1-MD16TA	01H	01H	6	20_04_24_01_30_03	6	20_04_24_01_30_03
DRT1-MD16TA-1	01H	01H	6	20_04_24_01_30_03	6	20_04_24_01_30_03
DRT1-ID32ML	04H	00H	6	20_04_24_01_30_03	0	---
DRT1-ID32ML-1	04H	00H	6	20_04_24_01_30_03	0	---
DRT1-OD32ML	00H	04H	0	---	6	20_04_24_01_30_03
DRT1-OD32ML-1	00H	04H	0	---	6	20_04_24_01_30_03
DRT1-MD32ML	02H	02H	6	20_04_24_01_30_03	6	20_04_24_01_30_03
DRT1-MD32ML-1	02H	02H	6	20_04_24_01_30_03	6	20_04_24_01_30_03

Model	Produced connection size	Consumed connection size	Produced connection path length	Produced connection path	Consumed connection path length	Consumed connection path
DRT1-ID16X	02H	00H	6	20_04_24_01_30_03	0	---
DRT1-ID16X-1	02H	00H	6	20_04_24_01_30_03	0	---
DRT1-OD16X	00H	02H	0	---	6	20_04_24_01_30_03
DRT1-OD16X-1	00H	02H	0	---	6	20_04_24_01_30_03
DRT1-HD16S	02H	00H	6	20_04_24_01_30_03	0	---
DRT1-ND16S	01H	01H	6	20_04_24_01_30_03	6	20_04_24_01_30_03
DRT1-TS04T	08H	00H	6	20_04_24_01_30_03	0	---
DRT1-TS04P	08H	00H	6	20_04_24_01_30_03	0	---
DRT1-AD04	04H or 08H	00H	6	20_04_24_01_30_03	0	---
DRT1-AD04H	08H	00H	6	20_04_24_01_30_03	0	---
DRT1-DA02	00H	04H	0	---	6	20_04_24_01_30_03
CQM1-DRT21	02H	02H	6	20_04_24_01_30_03	6	20_04_24_01_30_03
DRT1-ID04CL	01H	00H	6	20_04_24_01_30_03	0	---
DRT1-ID04CL-1	01H	00H	6	20_04_24_01_30_03	0	---
DRT1-ID08CL	01H	00H	6	20_04_24_01_30_03	0	---
DRT1-ID08CL-1	01H	00H	6	20_04_24_01_30_03	0	---
DRT1-ID08C	01H	00H	6	20_04_24_01_30_03	0	---
DRT1-HD16C	02H	00H	6	20_04_24_01_30_03	0	---
DRT1-HD16C-1	02H	00H	6	20_04_24_01_30_03	0	---
DRT1-OD04CL	00H	01H	0	---	6	20_04_24_01_30_03
DRT1-OD04CL-1	00H	01H	0	---	6	20_04_24_01_30_03
DRT1-OD08CL	00H	01H	0	---	6	20_04_24_01_30_03
DRT1-OD08CL-1	00H	01H	0	---	6	20_04_24_01_30_03
DRT1-OD08C	00H	01H	0	---	6	20_04_24_01_30_03
DRT1-WD16C	00H	01H	0	---	6	20_04_24_01_30_03
DRT1-WD16C-1	00H	01H	0	---	6	20_04_24_01_30_03
DRT1-MD16C	01H	01H	6	20_04_24_01_30_03	6	20_04_24_01_30_03
DRT1-MD16C-1	01H	01H	6	20_04_24_01_30_03	6	20_04_24_01_30_03
DRT1-B7AC	04H	00H	6	20_04_24_01_30_03	0	---

Item	Section	Information	Max. number of instances
Object instance 3	Instance type	Bit strobed I/O	1
	Production trigger	Cyclic	---
	Transport type	Server	---
	Transport class	2	---

Item		ID content	Get (read)	Set (write)	Value
Object instance 3	Attribute	1 State	Yes	No	---
		2 Instance type	Yes	No	01 (hexadecimal)
		3 Transport class trigger	Yes	No	82 (hexadecimal)
		4 Produced connection ID	Yes	No	---
		5 Consumed connection ID	Yes	No	---
		6 Initial comm. characteristics	Yes	No	01 (hexadecimal)
		7 Produced connection size	Yes	No	See note.
		8 Consumed connection size	Yes	No	0800H
		9 Expected packet rate	Yes	Yes	---
		12 Watchdog time-out action	Yes	No	01
		13 Produced connection path length	Yes	No	See note.
		14 Produced connection path	Yes	No	See note.
		15 Consumed connection path length	Yes	No	See note.
		16 Consumed connection path	Yes	No	See note.

Item		DeviceNet service	Parameter option
Object instance 3	Service	05Reset	No
		0EGet_Attribute_Single	No
		10Set_Attribute_Single	No

Note These values depend on the type of Slave being used. Refer to the following table.

Model	Produced connection size	Produced connection path length	Produced connection path	Consumed connection path length	Consumed connection path
DRT1-ID08	01H	6	20_04_24_01_30_03	0	---
DRT1-ID08-1	01H	6	20_04_24_01_30_03	0	---
DRT1-ID16	02H	6	20_04_24_01_30_03	0	---
DRT1-ID16-1	02H	6	20_04_24_01_30_03	0	---
DRT1-OD08	00H	0	---	6	20_04_24_01_30_03
DRT1-OD08-1	00H	0	---	6	20_04_24_01_30_03
DRT1-OD16	00H	0	---	6	20_04_24_01_30_03
DRT1-OD16-1	00H	0	---	6	20_04_24_01_30_03
DRT1-MD16	01H	6	20_04_24_01_30_03	0	---
DRT1-ID16T	02H	6	20_04_24_01_30_03	0	---
DRT1-ID16T-1	02H	6	20_04_24_01_30_03	0	---
DRT1-OD16T	00H	0	---	6	20_04_24_01_30_03
DRT1-OD16T-1	00H	0	---	6	20_04_24_01_30_03
DRT1-MD16T	01H	6	20_04_24_01_30_03	0	---
DRT1-MD16T-1	01H	6	20_04_24_01_30_03	0	---
DRT1-ID16TA	02H	6	20_04_24_01_30_03	0	---
DRT1-ID16TA-1	02H	6	20_04_24_01_30_03	0	---
DRT1-OD16TA	00H	0	---	6	20_04_24_01_30_03
DRT1-OD16TA-1	00H	0	---	6	20_04_24_01_30_03
DRT1-MD16TA	01H	6	20_04_24_01_30_03	0	---
DRT1-MD16TA-1	01H	6	20_04_24_01_30_03	0	---
DRT1-ID32ML	04H	6	20_04_24_01_30_03	0	---
DRT1-ID32ML-1	04H	6	20_04_24_01_30_03	0	---
DRT1-OD32ML	00H	0	---	6	20_04_24_01_30_03
DRT1-OD32ML-1	00H	0	---	6	20_04_24_01_30_03

Model	Produced connection size	Produced connection path length	Produced connection path	Consumed connection path length	Consumed connection path
DRT1-MD32ML	02H	6	20_04_24_01_30_03	0	---
DRT1-MD32ML-1	02H	6	20_04_24_01_30_03	0	---
DRT1-ID16X	02H	6	20_04_24_01_30_03	0	---
DRT1-ID16X-1	02H	6	20_04_24_01_30_03	0	---
DRT1-OD16X	00H	0	---	6	20_04_24_01_30_03
DRT1-OD16X-1	00H	0	---	6	20_04_24_01_30_03
DRT1-HD16S	02H	6	20_04_24_01_30_03	0	---
DRT1-ND16S	01H	6	20_04_24_01_30_03	0	---
DRT1-TS04T	08H	6	20_04_24_01_30_03	0	---
DRT1-TS04P	08H	6	20_04_24_01_30_03	0	---
DRT1-AD04	04H or 08H	6	20_04_24_01_30_03	0	---
DRT1-AD04H	08H	6	20_04_24_01_30_03	0	---
DRT1-DA02	00H	0	---	6	20_04_24_01_30_03
CQM1-DRT21	02H	6	20_04_24_01_30_03	0	---
DRT1-ID04CL	01H	6	20_04_24_01_30_03	0	---
DRT1-ID04CL-1	01H	6	20_04_24_01_30_03	0	---
DRT1-ID08CL	01H	6	20_04_24_01_30_03	0	---
DRT1-ID08CL-1	01H	6	20_04_24_01_30_03	0	---
DRT1-ID08C	01H	6	20_04_24_01_30_03	0	---
DRT1-HD16C	02H	6	20_04_24_01_30_03	0	---
DRT1-HD16C-1	02H	6	20_04_24_01_30_03	0	---
DRT1-OD04CL	00H	0	---	6	20_04_24_01_30_03
DRT1-OD04CL-1	00H	0	---	6	20_04_24_01_30_03
DRT1-OD08CL	00H	0	---	6	20_04_24_01_30_03
DRT1-OD08CL-1	00H	0	---	6	20_04_24_01_30_03
DRT1-OD08C	00H	0	---	6	20_04_24_01_30_03
DRT1-WD16C	00H	0	---	0	---
DRT1-WD16C-1	00H	0	---	0	---
DRT1-MD16C	01H	6	20_04_24_01_30_03	0	---
DRT1-MD16C-1	01H	6	20_04_24_01_30_03	0	---
DRT1-B7AC	04H	6	20_04_24_01_30_03	0	---

Device Profile for the C200H I/O Link Unit

General data	Compatible DeviceNet Specifications	Volume I - Release 1.3 Volume II - Release 1.3	
	Header name	OMRON Corporation	Header ID = 47
	Device type name	Slaves: Communication adapter	Device type number = 12
	Manufacturer catalog number	W347	
	Manufacturer revision	1.0	

Physical conformance data	Network current consumption	24 V DC at 45 mA max.
	Connector type	Open plug
	Physical insulation	Yes
	Supported indicators	Module, Network
	MAC ID setting	DIP switch
	Default MAC ID	0
	Baud rate setting	DIP switch
	Supported baud rates	125 kbps, 250 kbps, and 500 kbps
Communications data	Predefined Master/Slave connection set	Group 2 only server
	Dynamic connection support (UCMM)	No
	Explicit message fragmentation support	Yes

Object Mounting

Identity Object (0x01)

Object class	Attribute	Not supported
	Service	Not supported

Item		ID content	Get (read)	Set (write)	Value
Object instance	Attribute	1 Vendor	Yes	No	47
		2 Product type	Yes	No	12
		3 Product code	Yes	No	51
		4 Revision	Yes	No	1.3
		5 Status (bits supported)	Yes	No	Bit 0 only
		6 Serial number	Yes	No	Unique for each Unit
		7 Product name	Yes	No	C200HW-DRT21
		8 State	No	No	---

Item		DeviceNet service	Parameter option
Object instance	Service	05Reset	No
		0EGet_Attribute_Single	No

Message Router Object (0x02)

Object class	Attribute	Not supported
	Service	Not supported
Object instance	Attribute	Not supported
	Service	Not supported
Header specification addition		No

DeviceNet Object (0x03)

Object class	Attribute	Not supported
	Service	Not supported

Item		ID content	Get (read)	Set (write)	Value
Object instance	Attribute	1 MAC ID	Yes	No	---
		2 Baud rate	Yes	No	---
		3 BOI	Yes	No	00 (hexadecimal)
		4 Bus Off counter	Yes	No	---
		5 Allocation information	Yes	No	---
		6 MAC ID switch changed	No	No	---
		7 Baud rate switch changed	No	No	---
		8 MAC ID switch value	No	No	---
		9 Baud rate switch value	No	No	---

Item		DeviceNet service	Parameter option
Object instance	Service	0EGet_Attribute_Single	No
		4BAllocate_Master/Slave_Connection_Set	No
		4CRelease_Master/Slave_Connection_Set	No

Connection Object (0x05)

Object class	Attribute	Not supported
	Service	Not supported
	Max. number of active connections	1

Item	Section	Information	Max. number of instances
Object instance 1	Instance type	Explicit Message	1
	Production trigger	Cyclic	---
	Transport type	Server	---
	Transport class	3	---

Item		ID content	Get (read)	Set (write)	Value
Object instance 1	Attribute	1 State	Yes	No	---
		2 Instance type	Yes	No	0000 (hexadecimal)
		3 Transport class trigger	Yes	No	83 (hexadecimal)
		4 Produced connection ID	Yes	No	---
		5 Consumed connection ID	Yes	No	---
		6 Initial comm. characteristics	Yes	No	21 (hexadecimal)
		7 Produced connection size	Yes	No	FE00 (hexadecimal)
		8 Consumed connection size	Yes	No	FE00 (hexadecimal)
		9 Expected packet rate	Yes	Yes	---
		12 Watchdog time-out action	Yes	No	0100 (hexadecimal)
		13 Produced connection path length	Yes	No	0000 (hexadecimal)
		14 Produced connection path	Yes	No	---
		15 Consumed connection path length	Yes	No	0000 (hexadecimal)
		16 Consumed connection path	Yes	No	---
		17 Production inhibit time	Yes	No	0000 (hexadecimal)

Item		DeviceNet service	Parameter option
Object instance 1	Service	05Reset	No
		0EGet_Attribute_Single	No
		10Set_Attribute_Single	No

Item	Section	Information	Max. number of instances
Object instance 2	Instance type	Polled I/O	1
	Production trigger	Cyclic	---
	Transport type	Server	---
	Transport class	2	---

Item		ID content	Get (read)	Set (write)	Value
Object instance 2	Attribute	1 State	Yes	No	---
		2 Instance type	Yes	No	0100 (hexadecimal)
		3 Transport class trigger	Yes	No	82 (hexadecimal)
		4 Produced connection ID	Yes	No	---
		5 Consumed connection ID	Yes	No	---
		6 Initial comm. characteristics	Yes	No	01 (hexadecimal)
		7 Produced connection size	Yes	No	See note.
		8 Consumed connection size	Yes	No	See note.
		9 Expected packet rate	Yes	Yes	---
		12 Watchdog time-out action	Yes	No	0000 (hexadecimal)
		13 Produced connection path length	Yes	No	0000 (hexadecimal)
		14 Produced connection path	Yes	No	No
		15 Consumed connection path length	Yes	No	0000 (hexadecimal)
		16 Consumed connection path	Yes	No	No
		17 Production inhibit time	Yes	No	0000 (hexadecimal)

Item		DeviceNet service	Parameter option
Object instance 2	Service	05Reset	No
		0EGet_Attribute_Single	No
		10Set_Attribute_Single	No

Note The number of bytes in the specified Read Area (Input Area) and Write Area (Output Area) is as follows:
Produced connection size: Read Area bytes (default: 0200 (hexadecimal))
Consumed connection size: Write Area bytes (default: 0200 (hexadecimal))

Item	Section	Information	Max. number of instances
Object instance 3	Instance type	Bit strobed I/O	1
	Production trigger	Cyclic	---
	Transport type	Server	---
	Transport class	2	---

Item		ID content	Get (read)	Set (write)	Value
Object instance 3	Attribute	1 State	Yes	No	---
		2 Instance type	Yes	No	0100 (hexadecimal)
		3 Transport class trigger	Yes	No	82 (hexadecimal)
		4 Produced connection ID	Yes	No	---
		5 Consumed connection ID	Yes	No	---
		6 Initial comm. characteristics	Yes	No	01 (hexadecimal)
		7 Produced connection size	Yes	No	See note.
		8 Consumed connection size	Yes	No	0800 (hexadecimal)
		9 Expected packet rate	Yes	Yes	---
		12 Watchdog time-out action	Yes	No	0000 (hexadecimal)
		13 Produced connection path length	Yes	No	0000 (hexadecimal)
		14 Produced connection path	Yes	No	No
		15 Consumed connection path length	Yes	No	0000 (hexadecimal)
		16 Consumed connection path	Yes	No	No
		17 Production inhibit time	Yes	No	0000 (hexadecimal)

Item		DeviceNet service		Parameter option
Object instance 3	Service	05	Reset	No
		0E	Get_Attribute_Single	No
		10	Set_Attribute_Single	No

Note The number of bytes in the specified Read Area (Input Area) is as follows:
Produced connection size: Read Area bytes (default: 0200 (hexadecimal))

PLC Object (0x2F)

Object class	Attribute	Not supported
	Service	Not supported

Item		DeviceNet service	Parameter option
Object instance 1 (CIO Area 1: IR 000 to IR 235) See note.	Service	1C Block String Read	Logical Area Address Length
		1D Block String N Read	Logical Area Address Length
		1E Block String Write	Logical Area Address
		1F Block String N Write	Logical Area Address
Object instance 2 (CIO Area 2: IR 300 to IR 511) See note.	Service	1C Block String Read	Logical Area Address Length
		1D Block String N Read	Logical Area Address Length
		1E Block String Write	Logical Area Address
		1F Block String N Write	Logical Area Address
Object instance 3 (DM Area: DM 0 to DM 6143) See note.	Service	1C Block String Read	Logical Area Address Length
		1D Block String N Read	Logical Area Address Length
		1E Block String Write	Logical Area Address
		1F Block String N Write	Logical Area Address
Object instance 4 (LR Area: LR 00 to LR 63) See note.	Service	1C Block String Read	Logical Area Address Length
		1D Block String N Read	Logical Area Address Length
		1E Block String Write	Logical Area Address
		1F Block String N Write	Logical Area Address
Object instance 5 (HR Area: HR 00 to HR 99) See note.	Service	1C Block String Read	Logical Area Address Length
		1D Block String N Read	Logical Area Address Length
		1E Block String Write	Logical Area Address
		1F Block String N Write	Logical Area Address

Item		DeviceNet service	Parameter option
Object instance 6 (AR Area: AR 00 to AR 27) See note.	Service	1C Block String Read	Logical Area Address Length
		1D Block String N Read	Logical Area Address Length
		1E Block String Write	Logical Area Address
		1F Block String N Write	Logical Area Address
Object instance 7 (TIM/CNT Area: TIM/CNT 000 to TIM/CNT 511) See note.	Service	1C Block String Read	Logical Area Address Length
		1D Block String N Read	Logical Area Address Length
		1E Block String Write	Logical Area Address
		1F Block String N Write	Logical Area Address
Object instance 8 (EM Area: Depends on the model) See note.	Service	1C Block String Read	Logical Area Address Length
		1D Block String N Read	Logical Area Address Length
		1E Block String Write	Logical Area Address
		1F Block String N Write	Logical Area Address

Note The data areas shown in the table are for C200HX/HG/HE (-ZE) PLCs. Refer to the following table for the equivalent data areas in CS1H/G PLCs.

C200HX/HG/HE (-ZE)	CS1H/G
CIO Area 1 (IR 000 to IR 235)	CIO Area 1 (CIO 000 to CIO 235)
CIO Area 2 (IR 300 to IR 511)	CIO Area 2 (CIO 300 to CIO 511)
DM Area (DM 0000 to DM 6143)	Data Memory Area (D0000 to D6143)
LR Area (LR 00 to LR 63)	No equivalent
HR Area (HR 00 to HR 99)	Holding Area (H000 to H099)
AR Area (AR 00 to AR 27)	Holding Area (H100 to H127) (H101 is not allowed.)
TC Area (TC 00 to TC 511)	Timer PV Area (T000 to T511)
EM Area (Depends on the model being used.)	E Area (Depends on the model being used.)

Refresh Object (0x92)

Object class	Attribute	Not supported
	Service	Not supported

Item		ID and contents	Get (read)	Set (write)	Value
Object instance 1 (current value)	Attribute	64: Output refresh bytes	Yes	No	---
		65: Output refresh area type	Yes	No	---
		66: Output refresh address	Yes	No	---
		67: Input refresh bytes	Yes	No	---
		68: Input refresh area type	Yes	No	---
		69: Input refresh address	Yes	No	---

Item		DeviceNet service	Parameter option
Object instance 1 (current value)	Service	0EGet_Attribute_Single	No
		01Set_Attribute_Single	No

Item		ID content	Get (read)	Set (write)	Value
Object instance 2 (set value)	Attribute	64: Output refresh bytes	Yes	Yes	---
		65: Output refresh area type	Yes	Yes	---
		66: Output refresh address	Yes	Yes	---
		67: Input refresh bytes	Yes	Yes	---
		68: Input refresh area type	Yes	Yes	---
		69: Input refresh address	Yes	Yes	---

Item		DeviceNet service	Parameter option
Object instance 2 (set value)	Service	0E Get_Attribute_Single	No
		10 Set_Attribute_Single	No
		01 Get_Attribute_All	No
		02 Set_Attribute_All	No

Note The refresh areas are divided as follows:

C200HX/HG/HE (-ZE)	CS1H/G
CIO Area 1 (IR 000 to IR 235)	CIO Area 1 (CIO 000 to CIO 235)
CIO Area 2 (IR 300 to IR 511)	CIO Area 2 (CIO 300 to CIO 511)
DM Area (DM 0000 to DM 6143)	Data Memory Area (D0000 to D6143)
LR Area (LR 00 to LR 63)	No equivalent
HR Area (HR 00 to HR 99)	Holding Area (H000 to H099)
AR Area (AR 00 to AR 27)	Holding Area (H100 to H127) (H101 is not allowed.)
TC Area (TC 00 to TC 511)	Timer PV Area (T000 to T511)
EM or E Area (Only valid with PLC's equipped with Extended Data Memory. Bank 0 only.)	

Note Device Profile for the RS-232C Unit

General data	Compatible DeviceNet Specifications	Volume I - Release 2.0 Volume II - Release 2.0	
	Header name	OMRON Corporation	Header ID = 47
	Device type name	Slaves: Generic	Device type number = 0
	Manufacturer catalog number	W347	
	Manufacturer revision	1.0	
Physical conform-ance data	Network current consumption	24 V DC at 50 mA max.	
	Connector type	Open plug	
	Physical insulation	Yes	
	Supported indicators	Module, Network	
	MAC ID setting	DIP switch	
	Default MAC ID	0	
	Baud rate setting	DIP switch	
	Supported baud rates	125 kbps, 250 kbps, and 500 kbps	
Communications data	Predefined Master/Slave connection set	Group 2 only server	
	Dynamic connection support (UCMM)	Yes	
	Explicit message fragmentation support	Yes	

Object Mounting

Identity Object (0x01)

Object class	Attribute	Not supported
	Service	Not supported

Item		ID content	Get (read)	Set (write)	Value
Object instance	Attribute	1 Vendor	Yes	No	47
		2 Product type	Yes	No	0
		3 Product code	Yes	No	308
		4 Revision	Yes	No	1.4
		5 Status (bits supported)	Yes	No	---
		6 Serial number	Yes	No	Unique for each Unit
		7 Product name	Yes	No	DRT1-232C
		8 State	No	No	---

Item		DeviceNet service	Parameter option
Object instance	Service	05Reset	No
		0EGet_Attribute_Single	No

Message Router Object (0x02)

Object class	Attribute	Not supported
	Service	Not supported
Object instance	Attribute	Not supported
	Service	Not supported
Header specification addition		No

DeviceNet Object (0x03)

Item		ID content	Get (read)	Set (write)	Value
Object class	Attribute	1 Revision	Yes	No	02 (hexadecimal)
Object class	Service	Not supported			
Item		**ID content**	**Get (read)**	**Set (write)**	**Value**
Object instance	Attribute	1 MAC ID	Yes	No	---
		2 Baud rate	Yes	No	---
		3 BOI	Yes	No	00 (hexadecimal)
		4 Bus Off counter	Yes	No	---
		5 Allocation information	Yes	No	---
		6 MAC ID switch changed	No	No	---
		7 Baud rate switch changed	No	No	---
		8 MAC ID switch value	No	No	---
		9 Baud rate switch value	No	No	---

Item		DeviceNet service	Parameter option
Object instance	Service	0EGet_Attribute_Single	No
		4BAllocate_Master/Slave_Connection_Set	No
		4CRelease_Master/Slave_Connection_Set	No

Assembly Object (0x04)

Object class	Attribute	Not supported
	Service	Not supported

Item		ID content	Get (read)	Set (write)	Value
Object instance	Attribute	3 Data	Yes	No	---

Item		DeviceNet service	Parameter option
Object instance	Service	0EGet_Attribute_Single	No
		10Set_Attribute_Single	No

Connection Object (0x05)

Object class	Attribute	Not supported
	Service	Not supported
	Max. number of active connections	1

Item	Section	Information	Max. number of instances
Object instance 1	Instance type	Explicit Message	1
	Production trigger	Cyclic	---
	Transport type	Server	---
	Transport class	3	---

Item		ID content	Get (read)	Set (write)	Value
Object instance 1	Attribute	1 State	Yes	No	---
		2 Instance type	Yes	No	0000 (hexadecimal)
		3 Transport class trigger	Yes	No	83 (hexadecimal)
		4 Produced connection ID	Yes	No	---
		5 Consumed connection ID	Yes	No	---
		6 Initial comm. characteristics	Yes	No	21 (hexadecimal)
		7 Produced connection size	Yes	No	FFFF (hexadecimal)
		8 Consumed connection size	Yes	No	FFFF (hexadecimal)
		9 Expected packet rate	Yes	Yes	---
		12 Watchdog time-out action	Yes	Yes	01 (hexadecimal)
		13 Produced connection path length	Yes	No	00 (hexadecimal)
		14 Produced connection path	Yes	No	---
		15 Consumed connection path length	Yes	No	00 (hexadecimal)
		16 Consumed connection path	Yes	No	---
		17 Production inhibit time	Yes	No	00 (hexadecimal)

Item		DeviceNet service	Parameter option
Object instance 1	Service	0EGet_Attribute_Single	No
		10Set_Attribute_Single	No

Item	Section	Information	Max. number of instances
Object instance 2	Instance type	Polled I/O	1
	Production trigger	Cyclic	---
	Transport type	Server	---
	Transport class	2	---

Item		ID content	Get (read)	Set (write)	Value
Object instance 2	Attribute	1 State	Yes	No	---
		2 Instance type	Yes	No	01 (hexadecimal)
		3 Transport class trigger	Yes	No	82 (hexadecimal)
		4 Produced connection ID	Yes	No	---
		5 Consumed connection ID	Yes	No	---
		6 Initial comm. characteristics	Yes	No	01 (hexadecimal)
		7 Produced connection size	Yes	No	0200 (hexadecimal)
		8 Consumed connection size	Yes	No	0000 (hexadecimal)
		9 Expected packet rate	Yes	Yes	---
		12 Watchdog time-out action	Yes	No	00 (hexadecimal)
		13 Produced connection path length	Yes	No	02 (hexadecimal)
		14 Produced connection path	Yes	No	---
		15 Consumed connection path length	Yes	No	00 (hexadecimal)
		16 Consumed connection path	Yes	No	---
		17 Production inhibit time	Yes	No	00 (hexadecimal)

Item		DeviceNet service	Parameter option
Object instance 2	Service	0EGet_Attribute_Single	No
		10Set_Attribute_Single	No

Item	Section	Information	Max. number of instances
Object instance 3	Instance type	Bit strobed I/O	1
	Production trigger	Cyclic	---
	Transport type	Server	---
	Transport class	2	---

Item		ID content	Get (read)	Set (write)	Value
Object instance 3	Attribute	1 State	Yes	No	---
		2 Instance type	Yes	No	01 (hexadecimal)
		3 Transport class trigger	Yes	No	82 (hexadecimal)
		4 Produced connection ID	Yes	No	---
		5 Consumed connection ID	Yes	No	---
		6 Initial comm. characteristics	Yes	No	02 (hexadecimal)
		7 Produced connection size	Yes	No	0200 (hexadecimal)
		8 Consumed connection size	Yes	No	0800 (hexadecimal)
		9 Expected packet rate	Yes	Yes	---
		12 Watchdog time-out action	Yes	No	00 (hexadecimal)
		13 Produced connection path length	Yes	No	06 (hexadecimal)
		14 Produced connection path	Yes	No	20_04_24_01_30_03
		15 Consumed connection path length	Yes	No	00 (hexadecimal)
		16 Consumed connection path	Yes	No	---
		17 Production inhibit time	Yes	No	00 (hexadecimal)

Item		DeviceNet service	Parameter option
Object instance 3	Service	0EGet_Attribute_Single	No
		10Set_Attribute_Single	No

Appendix C

Connectable Devices and Device Current Consumptions

Slave Units

Basic I/O Slave Units

Model	Specifications	Manufacturer
DRT1-ID08	Remote I/O Terminal 8 Transistor inputs (NPN)	OMRON
DRT1-ID08-1	Remote I/O Terminal 8 Transistor inputs (PNP)	OMRON
DRT1-ID16	Remote I/O Terminal 16 Transistor inputs (NPN)	OMRON
DRT1-ID16-1	Remote I/O Terminal 16 Transistor inputs (PNP)	OMRON
DRT1-OD08	Remote I/O Terminal 8 Transistor outputs (NPN)	OMRON
DRT1-OD08-1	Remote I/O Terminal 8 Transistor outputs (PNP)	OMRON
DRT1-OD16	Remote I/O Terminal 16 Transistor outputs (NPN)	OMRON
DRT1-OD16-1	Remote I/O Terminal 16 Transistor outputs (PNP)	OMRON
DRT1-MD16	Remote I/O Terminal 8 Transistor inputs, 8 transistor outputs (NPN)	OMRON
DRT1-ID16T	Remote I/O Terminal 16 Transistor inputs (NPN) (3-tier I/O Terminal Block)	OMRON
DRT1-ID16T-1	Remote I/O Terminal 16 Transistor inputs (PNP) (3-tier I/O Terminal Block)	OMRON
DRT1-OD16T	Remote I/O Terminal 16 Transistor outputs (NPN) (3-tier I/O Terminal Block)	OMRON
DRT1-OD16T-1	Remote I/O Terminal 16 Transistor outputs (PNP) (3-tier I/O Terminal Block)	OMRON
DRT1-MD16T	Remote I/O Terminal 8 Transistor inputs, 8 transistor outputs (NPN) (3-tier I/O Terminal Block)	OMRON
DRT1-MD16T-1	Remote I/O Terminal 8 Transistor inputs, 8 transistor outputs (PNP) (3-tier I/O Terminal Block)	OMRON
DRT1-ID16TA	Remote I/O Terminal 16 Transistor inputs (NPN) (3-tier I/O Terminal Block, internal power sup-ply not required)	OMRON
DRT1-ID16TA-1	Remote I/O Terminal 16 Transistor inputs (PNP) (3-tier I/O Terminal Block, internal power sup-ply not required)	OMRON

Model	Specifications	Manufacturer
DRT1-OD16TA	Remote I/O Terminal 16 Transistor outputs (NPN) (3-tier I/O Terminal Block, internal power supply not required)	OMRON
DRT1-OD16TA-1	Remote I/O Terminal 16 Transistor outputs (PNP) (3-tier I/O Terminal Block, internal power supply not required)	OMRON
DRT1-MD16TA	Remote I/O Terminal 8 Transistor inputs, 8 transistor outputs (NPN) (3-tier I/O Terminal Block, internal power supply not required)	OMRON
DRT1-MD16TA-1	Remote I/O Terminal 8 Transistor inputs, 8 transistor outputs (PNP) (3-tier I/O Terminal Block, internal power supply not required)	OMRON
DRT1-ID32ML	Remote I/O Terminal 32 Transistor inputs (NPN) with Connectors	OMRON
DRT1-ID32ML-1	Remote I/O Terminal 32 Transistor inputs (PNP) with Connectors	OMRON
DRT1-OD32ML	Remote I/O Terminal 32 Transistor outputs (NPN) with Connectors	OMRON
DRT1-OD32ML-1	Remote I/O Terminal 32 Transistor outputs (PNP) with Connectors	OMRON
DRT1-MD32ML	Remote I/O Terminal 16 Transistor inputs, 16 transistor outputs (NPN) with Connectors	OMRON
DRT1-MD32ML-1	Remote I/O Terminal 16 Transistor inputs, 16 transistor outputs (PNP) with Connectors	OMRON
DRT1-ID16X	Remote Adapter 16 Transistor inputs (NPN)	OMRON
DRT1-ID16X-1	Remote Adapter 16 Transistor inputs (PNP)	OMRON
DRT1-OD16X	Remote Adapter 16 Transistor outputs (NPN)	OMRON
DRT1-OD16X-1	Remote Adapter 16 Transistor outputs (PNP)	OMRON
DRT1-HD16S	Sensor Terminal 8 sensor inputs (NPN) 2 inputs per sensor	OMRON
DRT1-ND16S	Sensor Terminal 8 sensor inputs (NPN) 1 input and 1 output per sensor	OMRON
DRT1-AD04	Analog Input Terminal 4 analog inputs (using 4 words) or 2 analog inputs (using 2 words) (Switchable)	OMRON
DRT1-AD04H	Analog Input Terminal 4 analog inputs (using 4 words)	OMRON
DRT1-DA02	Analog Output Terminal 2 analog outputs (using 2 words)	OMRON
DRT1-TS04T	Temperature Input Terminal Thermocouple thermometer input 4 temperature data inputs (using 4 words)	OMRON

Model	Specifications	Manufacturer
DRT1-TS04P	Temperature Input Terminal Temperature-resistance thermometer input 4 temperature data inputs (using 4 words)	OMRON
CQM1-DRT21	I/O Link Unit suitable for CQM1-series PLC. 16 inputs and 16 outputs	OMRON

Environment-resistive Slaves

Model	Specifications	Manufacturer
DRT1-ID08C	Environment-resistive Terminal 8 Transistor inputs (NPN) Conforms to IEC IP66	OMRON
DRT1-HD16C	Environment-resistive Terminal 16 Transistor inputs (NPN) Conforms to IEC IP66	OMRON
DRT1-HD16C-1	Environment-resistive Terminal 16 Transistor inputs (PNP) Conforms to IEC IP66	OMRON
DRT1-OD08C	Environment-resistive Terminal 8 Transistor outputs (NPN) Conforms to IEC IP66	OMRON
DRT1-WD16C	Environment-resistive Terminal 16 Transistor outputs (NPN) Conforms to IEC IP66	OMRON
DRT1-WD16C-1	Environment-resistive Terminal 16 Transistor outputs (PNP) Conforms to IEC IP66	OMRON
DRT1-MD16C	Environment-resistive Terminal 8 Transistor inputs, 8 transistor outputs (NPN) Conforms to IEC IP66	OMRON
DRT1-MD16C-1	Environment-resistive Terminal 8 Transistor inputs, 8 transistor outputs (NPN) Conforms to IEC IP66	OMRON
DRT1-ID04CL	Waterproof Terminal 4 Transistor inputs (NPN) Conforms to IEC IP67	OMRON
DRT1-ID04CL-1	Waterproof Terminal 4 Transistor inputs (PNP) Conforms to IEC IP67	OMRON
DRT1-ID08CL	Waterproof Terminal 8 Transistor inputs (NPN) Conforms to IEC IP67	OMRON
DRT1-ID08CL-1	Waterproof Terminal 8 Transistor inputs (PNP) Conforms to IEC IP67	OMRON
DRT1-OD04CL	Waterproof Terminal 4 Transistor outputs (NPN) Conforms to IEC IP67	OMRON
DRT1-OD04CL-1	Waterproof Terminal 4 Transistor outputs (PNP) Conforms to IEC IP67	OMRON
DRT1-OD08CL	Waterproof Terminal 8 Transistor outputs (NPN) Conforms to IEC IP67	OMRON
DRT1-OD08CL-1	Waterproof Terminal 8 Transistor outputs (PNP) Conforms to IEC IP67	OMRON
DRT1-B7AC	B7AC Interface Unit	OMRON

Special I/O Slave Units

Model	Specifications	Manufacturer
C200HW-DRT21	I/O Link Unit for C200HE, C200HG, C200HX PLCs (User-set allocations possible) 512 inputs max, 512 outputs max. Read/Write Area can be user-set using explicit DeviceNet messages	OMRON
DRT1-232C2	RS-232C Unit with 2 RS-232C ports 16 inputs (communications status) RS-232C ports' parameters can be set, and data can be transmitted to and from external devices using explicit DeviceNet messages	OMRON

Communications Cables

Model	Specifications	Manufacturer
DCA2-5C10	Thick cable: 5 wires, 100 m	OMRON
DCA1-5C10	Thin cable: 5 wires, 100 m	OMRON
DVN18-10G	Thick cable: 5 wires, 10 m	Nihon Wire & Cable
DVN18-30G	Thick cable: 5 wires, 30 m	Nihon Wire & Cable
DVN18-50G	Thick cable: 5 wires, 50 m	Nihon Wire & Cable
DVN18-100G	Thick cable: 5 wires, 100 m	Nihon Wire & Cable
DVN18-300G	Thick cable: 5 wires, 300 m	Nihon Wire & Cable
DVN18-500G	Thick cable: 5 wires, 500 m	Nihon Wire & Cable
DVN24-10G	Thin cable: 5 wires, 10 m	Nihon Wire & Cable
DVN24-30G	Thin cable: 5 wires, 30 m	Nihon Wire & Cable
DVN24-50G	Thin cable: 5 wires, 50 m	Nihon Wire & Cable
DVN24-100G	Thin cable: 5 wires, 100 m	Nihon Wire & Cable
DVN24-300G	Thin cable: 5 wires, 300 m	Nihon Wire & Cable
DVN24-500G	Thin cable: 5 wires, 500 m	Nihon Wire & Cable
1485C-P1-A50	Thick cable: 5 wires, 50 m	Allen-Bradley
1485C-P1-C150	Thin cable: 5 wires, 150 m	Allen-Bradley
DCA1-5CN□W1	Cable with round shielded connectors on both ends (one socket and one plug)	OMRON
DCA1-5CN□F1	Cable with round shielded connector (female socket) on one end	OMRON
DCA1-5CN□H1	Cable with round shielded connector (male plug) on one end	OMRON

Note 1. The cables made by Nihon Wire & Cable Company Ltd. are sold through the OMRON 24 Service Co., Ltd. The product specifications are identical to the OMRON cable specifications.

2. The cables made by Allen-Bradley are stiffer than the cables made by OMRON and Nihon Wire & Cable Company Ltd., so do not bend the Allen-Bradley cables as much as the others

Connectors

Model	Specifications	Manufacturer
MSTB2.5/5-ST-5.08AU	For node connection Without connector set screws (Included with the DRT1-□D08(-1), DRT1-□D16(-1), DRT1-□D16X(-1), DRT1-□D16S(-1), DRT1-AD04(H), DRT1-DA02, and DRT1-TS04□)	Phoenix Contact GmbH & Co.
XW4B-05C1-H1-D	For T-branch Tap and node connection With connector set screws (Included with the DRT1-□D16T(-1), DRT1-□D32ML(-1), CVM1-DRM21-V1, C200HW-DRM21-V1, CQM1-DRT21, and DCN1)	OMRON
XW4B-05C4-T-D	For node connection (Multi-drop wiring) Without connector set screws	OMRON
XW4B-05C4-TF-D	For node connection (Multi-drop wiring) With connector set screws	OMRON

Crimp Terminals for Communications Cables

Model	Crimper	Remarks	Manufacturer
TC series: TME TC-0.5 (for thin cable) TME TC-2-11 (power supply wire for thick cable) TME TC-1.25-11 (communications wire for thick cable)	NH-32	For single wire insertion	Nichifu Co., Ltd. (See note.)
AI series: AI-0.5-8WH-B (product number 3201369)	ZA3	For single wire insertion	Phoenix Contact GmbH & Co.
AI series: AI-TWIN2×0.5-8WH (product number 3200933)	UD6 (product number 1204436)	For two-wire insertion (Multi-drop use)	

Note The solderless (crimp) terminals made by Nichifu Co., Ltd. are sold through the OMRON 24 Service Co., Ltd. Contact the Nichifu Co., Ltd. directly for details on their products.

Specialty Screwdrivers for Connectors

Model	Specifications	Manufacturer
XW4Z-00C	Special screwdriver for DeviceNet connectors	OMRON
SZF-1	Special screwdriver for DeviceNet connectors	OMRON Tsufo Service

Terminating Resistors

Model	Specifications	Manufacturer
DRS1-T	Terminal-block Terminating Resistor, 121 Ω	OMRON
DRS2-1	Shielded Terminating Resistor (male plug)	
DRS2-2	Shielded Terminating Resistor (female socket)	

Note Also can be used as Terminating Resistor with T-branch Tap.

T-branch Taps

Model	Specifications	Manufacturer
DCN1-1C	3 connectors provided (When used on trunk line, 1 drop line can be connected.) Terminating Resistor can be connected.	OMRON
DCN1-3C	5 connectors provided (When used on trunk line, 3 drop lines can be connected.) Terminating Resistor can be connected.	OMRON

T-branch Connector

Model	Specifications	Manufacturer
DCN2-1	Shielded T-branch Connector (1 branch)	OMRON

Power Supply Sharing Taps

Model	Specifications	Manufacturer
1485T-P2T5-T5	Required when connecting more than one power supply. Countercurrent flow prevention, ground terminal provided	Allen-Bradley
DCN1-1P	One-branch tap for power supply. Use this tap when connecting a communications power supply. Two connectors and two fuses are standard.	OMRON

Note The Power Supply Sharing Taps are sold through the OMRON 24 Service Co., Ltd.

Connectors for I/O Cable Connections to Sensor Terminals

Model	Specifications	Manufacturer
XS8A-0441	Connector marking: XS8-1 Applicable cable wire size: 0.3 to 0.5 mm^2	OMRON
XS8A-0442	Connector marking: XS8-2 Applicable cable wire size: 0.14 to 0.2 mm^2	OMRON

Connectors for Environment-resistive Slaves

DRT1-□D□□C (-1): I/O Connectors

Model	Description	Manufacturer
XS2G-D4□□	Connector male plug assembly (Crimp-connect or soldered)	OMRON
XS2H-D421-□□□	Cable with connector on one end (Male plug on one end, cable wires on one end)	
XS2W-D42□-□□□	Cable with connectors at both ends (Male plug on one end, female socket on one end)	

DRT1-□D□□C (-1): External Power Supply Connectors

Model	Description	Manufacturer
XS2C-D4□□	Female connector socket assembly (Crimp-connect or soldered)	OMRON
XS2F-D42□-□80-A	Cable with connector on one end (Female socket on one end, cable wires on one end)	

DRT1-□D□□CL (-1): I/O Connectors

Model	Description	Manufacturer
XS2G-D4□□	Connector male plug assembly (Crimp-connect or soldered)	OMRON
XS2H-D421-□□□-□	Cable with connector on one end (Male plug on one end, cable wires on one end)	
XS2W-D42□-□□□-□	Cable with connectors at both ends (Male plug on one end, female socket on one end)	

DRT1-□D□□CL (-1): External Power Supply Connectors

Model	Description	Manufacturer
XS2C-D4□□	Female connector socket assembly (Crimp-connect or soldered)	OMRON
XS2F-D42□-□80-□	Cable with connector on one end (Female socket on one end, cable wires on one end)	
XS2W-D42□-□□□-□	Cable with connectors at both ends (Male plug on one end, female socket on one end)	

DRT1-B7AC: I/O Connectors

Model	Description	Manufacturer
XS2G-D4□□	Connector male plug assembly (Crimp-connect or soldered)	OMRON
XS2H-D42□-□□□-□	Cable with connector on one end (Male plug on one end, cable wires on one end)	
XS2W-D42□-□□□-□	Cable with connectors at both ends (Male plug on one end, female socket on one end)	

DRT1-B7AC: External Power Supply Connectors

Model	Description	Manufacturer
XS2C-D4□□	Female connector socket assembly (Crimp-connect or soldered)	OMRON
XS2F-D42□-□□□-□	Cable with connector on one end (Female socket on one end, cable wires on one end)	
XS2W-D42□-□□□-□	Cable with connectors at both ends (Male plug on one end, female socket on one end)	

T-joint

Model	Description	Manufacturer
XS2R-D427-5	Shielded T-joint (Use to branch a cable for an Environment-resistive Terminal's internal power supply.)	OMRON

Y-joint Plug/Socket

Model	Description		Manufacturer
XS2R-D426-□11F	With cable	Use for Environment-resistive Terminals with 16 inputs or 16 outputs. (Branches a single connector's signals to two connectors.)	OMRON
XS2R-D426-1	Without cable		

Connector Covers for Environment-resistive Slaves

Model	Description	Manufacturer
XS2Z-12	Waterproof Cover (meets 1P67 standards)	OMRON
XS2Z-15	Dust Cover	

RS-232C Connectors for the RS-232C Unit

Name	Model	Description	Manufacturer
Plug	XM2D-0901 (or equivalent)	9-pin, female	OMRON
Hood	XM2S-0913 (or equivalent)	9-pin, SAE screws	
Recommended cable	UL2464 AWG28×5P IFS-RVV-SB	UL listed	Fujikura
	AWG28×5P IFVV-SB	Not UL listed	
	UL2464-SB 5P×AWG28	UL listed	Hitachi
	CO-MA-VV-SB 5P×AWG28	Not UL listed	

Bracket for Remote I/O Terminal with Connector

Model	Description	Manufacturer
SRT2-ATT02	Mounting bracket B	OMRON

MIL Cables for Remote I/O Terminal with Connector

Cables with Connectors on Both Ends (40-pin on One End, Two 20-pins on One End)

Model	Compatible Slaves	Compatible Terminals	Manufacturer
G79-I50-25-D1 (50 cm) G79-I75-50-D1 (75 cm)	DRT1-ID32ML	G7TC-ID16, G7TC-IA16	OMRON
	DRT1-OD32ML-1	G7TC-OC16-4, M7F	
G79-I50-25-D2 (50 cm) G79-I75-50-D2 (75 cm)	DRT1-ID32ML-1	G70A-ZIM16-5	
G79-O50-25-D1 (50 cm) G79-O75-50-D1 (75 cm)	DRT1-OD32ML	G7TC-OC08/OC16, G70D-SOC16/VSOC16, G70A-ZOC16-3	
	DRT1-OD32ML-1	G70A-ZOC16-4, G70D-SOC16-1	
G79-M50-25-D1 (50 cm) G79-M75-50-D1 (75 cm)	DRT1-MD32ML	Inputs: G7TC-ID16/IA16 Outputs: G7TC-OC08/OC16, G7OD-SOC16/VSOC16, G70A-ZOC16-3	
G79-M50-25-D2 (50 cm) G79-M75-50-D2 (75 cm)	DRT1-MD32ML-1	Inputs: G70A-ZIM16-5 Outputs: G70A-ZOC16-4, G70D-SOC16-1	

Cables with Connector on One End (40-pin on One End, WIres on One End)

Model	Description	Manufacturer
G79-A200C-D1 (2 m) G79-A500C-D1 (5 m)	Loose wire gauge: 28 AWG (Wires are just cut.)	OMRON
G79-Y100C-D1 (1 m) G79-Y200C-D1 (2 m) G79-Y500C-D1 (5 m)	Fork terminals are attached to all of the loose wires. Fork terminal model number: 161071-M2	

Flat Cable Crimp Connector

Model	Description	Manufacturer
XG4M-4030-T	For cable with 28 AWG wires	OMRON

Loose WIre Crimp Connectors

Name	Model	Description	Manufacturer
Socket	XG5M-4032-N	For cable with 24 AWG wires	OMRON
	XG5M-4035-N	For cable with 28 to 26 AWG wires	
Partial Cover	XG5S-2001	Two are required for each connector	
Hood Cover	XG5S-2002	Cannot be used together with DeviceNet Connectors for multi-drop wiring.	

Current Consumption Summary

Model	Internal current consumption	Communications current consumption
DRT1-ID08	50 mA max.	30 mA max.
DRT1-ID08-1	50 mA max.	30 mA max.
DRT1-ID16	50 mA max.	30 mA max.
DRT1-ID16-1	50 mA max.	30 mA max.
DRT1-OD08	50 mA max.	30 mA max.
DRT1-OD08-1	50 mA max.	30 mA max.
DRT1-OD16	50 mA max.	30 mA max.
DRT1-OD16-1	50 mA max.	30 mA max.
DRT1-MD16	50 mA max.	25 mA max.
DRT1-ID16T	90 mA max.	30 mA max.
DRT1-ID16T-1	90 mA max.	30 mA max.
DRT1-ID16TA	(See note.)	50 mA max.
DRT1-ID16TA-1	(See note.)	50 mA max.
DRT1-OD16T	90 mA max.	30 mA max.
DRT1-OD16T-1	90 mA max.	30 mA max.
DRT1-OD16TA	(See note.)	50 mA max.
DRT1-OD16TA-1	(See note.)	50 mA max.
DRT1-MD16T	90 mA max.	30 mA max.
DRT1-MD16T-1	90 mA max.	30 mA max.
DRT1-MD16TA	(See note.)	50 mA max.
DRT1-MD16TA-1	(See note.)	50 mA max.
DRT1-ID32ML	(See note.)	50 mA max.
DRT1-ID32ML-1	(See note.)	50 mA max.
DRT1-OD32ML	(See note.)	90 mA max.
DRT1-OD32ML-1	(See note.)	90 mA max.
DRT1-MD32ML	(See note.)	70 mA max.
DRT1-MD32ML-1	(See note.)	70 mA max.
DRT1-ID16X	70 mA max.	30 mA max.
DRT1-ID16X-1	70 mA max.	30 mA max.
DRT1-OD16X	70 mA max.	30 mA max.
DRT1-OD16X-1	70 mA max.	30 mA max.
DRT1-HD16S	60 mA max.	40 mA max.
DRT1-ND16S	60 mA max.	40 mA max.
DRT1-AD04	80 mA max.	30 mA max.

Model	Internal current consumption	Communications current consumption
DRT1-AD04H	130 mA max.	30 mA max.
DRT1-DA02	140 mA max.	30 mA max.
DRT1-TS04T	130 mA max.	30 mA max.
DRT1-TS04P	130 mA max.	30 mA max.
CQM1-DRT21	80 mA max. (at 5 V DC, supplied from the PLC's Power Supply Unit)	40 mA max.
CPM1A-DRT21	50 mA max. (at 5 V DC, supplied from the PLC's CPU Unit.)	30 mA max.

Note The internal power supply and communications power supply are shared.

Environment-resistive Slaves

Model	Internal current consumption	Communications current consumption
DRT1-ID04CL	(See note.)	25 mA max.
DRT1-ID04CL-1	(See note.)	25 mA max.
DRT1-ID08CL	(See note.)	30 mA max.
DRT1-ID08CL-1	(See note.)	30 mA max.
DRT1-ID08C	50 mA max.	30 mA max.
DRT1-HD16C	50 mA max.	30 mA max.
DRT1-HD16C-1	50 mA max.	30 mA max.
DRT1-OD04CL	(See note.)	35 mA max.
DRT1-OD04CL-1	(See note.)	35 mA max.
DRT1-OD08CL	(See note.)	40 mA max.
DRT1-OD08CL-1	(See note.)	40 mA max.
DRT1-OD08C	50 mA max.	30 mA max.
DRT1-WD16C	60 mA max.	30 mA max.
DRT1-WD16C-1	60 mA max.	30 mA max.
DRT1-MD16C	50 mA max.	30 mA max.
DRT1-MD16C-1	50 mA max.	50 mA max.
DRT1-B7AC	500 mA max.	70 mA max.

Note The internal power supply and communications power supply are shared.

Special-purpose Slaves

Model	Internal current consumption	Communications current consumption
C200HW-DRT21	250 mA max. (Supplied from the Backplane)	45 mA max.
DRT1-232C2	100 mA max.	50 mA max.

Appendix D

Precautions when Connecting Two-wire DC Sensors

When using a two-wire sensor with a 12-V DC or 24-V DC input device, check that the following conditions have been met. Failure to meet these conditions may result in operating errors.

Relation between Slave with Transistor Inputs and Sensor Residual Voltage

$V_{ON} \leq V_{CC} - V_R$

V_{CC}: I/O power supply voltage (The allowable power supply range is 20.4 to 26.4 V, and thus 20.4 V will be used to allow for the worst possible conditions.)

V_{ON}: ON voltage for a Slave with Transistor Inputs

V_R: Sensor's output residual voltage

ON Current for Slave with Transistor Inputs and Sensor Control Output (Load Current)

I_{OUT} (min) $\leq I_{ON} \leq I_{OUT}$ (max.)

I_{OUT}: Sensor control output (load current)

I_{ON}: Slave ON current

$I_{ON} = (V_{CC} - V_R - V_F)/R_{IN}$

V_F: Internal residual voltage of Slave

R_{IN}: Input impedance of Slave

When I_{ON} is smaller than I_{OUT} (min), connect a bleeder resistor R. The bleeder resistor constant can be calculated as follows:

$R \leq (V_{CC} - V_R)/(I_{OUT}\text{ (min.)} - I_{ON})$

Power $W \geq (V_{CC} - V_R)^2/R \times 4$ [allowable margin]

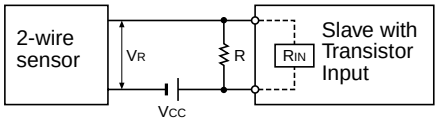

Relation between OFF Current of Slave with Transistor Inputs and Sensor Leakage Current

$I_{OFF} \geq I_{leak}$

I_{OFF}: OFF current of Slave

I_{leak}: Leakage current of Slave

Connect a breeder resistor if I_{leak} is greater than I_{OFF}. Use the following equation to calculate the breeder resistance constant.

$R \leq (I_{OFF} \times R_{IN} + V_F)/(I_{leak} - V_{OFF})$

Power $W \geq (V_{CC} - V_R)^2/R \times 4$ [allowable margin]

Glossary

Busoff	A Busoff error occurs when there is an unacceptably high error rate on the communications bus. This error is detected when the internal error counter exceeds a specified value. (The error counter is cleared whenever the Master Unit is started or reset.)
CAN	Controller Area Network. A communications protocol for a LAN developed for mounting in automobiles. The DeviceNet uses CAN technology.
configurator	A device used to make system settings, read IDs, read/write parameters, read the network configuration, etc. OMRON provides a DeviceNet Configurator for OMRON Master Units.
consumed connection size	The size in bytes of the data received through a connection.
ODVA	Open DeviceNet Vendor Association. A non-profit vendor association responsible for spreading DeviceNet.
produced connection size	The size in bytes of the data sent through a connection.
connection	A logical communications channel created to communicate between two nodes. Connections are established and maintained between masters and slaves.
device profile	A description of the structure and behavior of a device giving the minimum data configurations and operations that the device must support. Device profiles enable common device models, and are also called device models. Device profiles are being studied for sensors, valves, displays, encoders, and other devices.
master	A node that controls the collection and distribution of data. With the DeviceNet, the predefined master/slave connection set defines the functions provided by all masters.
slave	A node that provides data in response to requests from masters. With the DeviceNet, the predefined master/slave connection set defines the functions provided by all slaves.

Index

Numerics

7-segment display
  meaning, 233, 312

A

allocations
  CQM1
    I/O Link Unit, 173
Analog Input Terminals
  averaging function, 147
  components, 139
  converted data, 142
  converted data storage, 147
  dimensions, 149
  DIP switch, 139
  input ranges, 142
  inputs
    setting number of, 146
  internal circuitry, 141
  open-circuit detection function, 147
  rotary switch, 140
  specifications, 137
  wiring, 142
Analog Input Units
  troubleshooting, 315
Analog Output Terminals
  components, 150
  converted data, 153
  converted data storage, 155
  dimensions, 155
  DIP switch, 151
  internal circuitry, 152
  output ranges, 153
  outputs
    status after communications error, 154
  rotary switch, 151
  specifications, 149
  terminal arrangement, 152
  wiring, 153
averaging function
  Analog Input Terminals, 147

C

cleaning, 318
communications, 305
  cycle time, 305
communications cycle time, 305
connector pin allocation
  Remote Adapter
    16 output type, 119
converted data
  Analog Input Terminals, 142
  Analog Output Terminals, 153
converted data storage
  Analog Input Terminals, 147
  Analog Output Terminals, 155
CQM1 word allocation
  I/O Link Units, 173
cycle time, 305
  communications, 305

D-E

decimal 2-column display mode
  Temperature Input Terminals, 164
dimensions
  Analog Input Terminals, 149
  Analog Output Terminals, 155
  I/O Link Units, 174
  Master Units
    C200HX, C200HG, C200HE, and C200HS PLCs, 256
  Remote Adapter
    16 input type, 116
    16 output type, 121
  Sensor Terminals, 128, 132
  Temperature Input Terminals, 160, 169
  Transistor Remote Terminals
    transistor input, 45
    transistor output, 197
DIP switch
  Analog Input Terminals, 139
  Analog Output Terminals, 151
  Temperature Input Terminals, 160
errors
  indicators
    Slave Unit, 312

I

I/O Link Units
  components, 173
  CQM1 word allocation, 173
  dimensions, 174
  specifications, 173
I/O response times, 300
  maximum
    C200HX, C200HG, C200HE, and C200HS PLCs, 305
    CV-series PLCs in asynchronous mode, 301
    CV-series PLCs in synchronous mode, 303
  minimum
    C200HX, C200HG, C200HE, and C200HS PLCs, 304
    CV-series PLCs in asynchronous mode, 300
    CV-series PLCs in synchronous mode, 302
indicators
  errors
    Slave Unit, 312
  Master Units
    CV-series, 233
  meaning, 29
input devices
  Remote Adapter
    16 input type, 115, 116
input ranges
  Analog Input Terminals, 142
inputs
  setting number of
    Analog Input Terminals, 146
inspection, 318
internal circuitry
  Analog Input Terminals, 141
  Analog Output Terminals, 152
  Sensor Terminals, 127, 130
  Transistor Remote Terminals

transistor input, 42, 46
transistor output, 54
internal circuitry power supply
Remote Adapter
16 input type, 114, 115
16 output type, 119, 120

M-P

maintenance, 318
Master Units
dimensions
C200HX, C200HG, C200HE, and C200HS PLCs, 256
indicators
CV-series, 233

N

nodes
number setting table, 321
replacement, 319

O

open-circuit detection function
Analog Input Terminals, 147
output devices
Remote Adapter
16 output type, 120, 121
output ranges
Analog Output Terminals, 153
outputs
status after communications error
Analog Output Terminals, 154

R

refresh time, 307
Remote Adapter
16 input type
components, 113
dimensions, 116
input devices, 115, 116
internal circuitry power supply, 114, 115
specifications, 112
16 output type
connector pin allocation, 119
dimensions, 121
internal circuitry power supply, 119, 120
output devices, 120, 121
rotary switch
Analog Input Terminals, 140
Analog Output Terminals, 151
Temperature Input Terminals, 161

S

Sensor Terminals
components, 126, 130
dimensions, 128, 132
internal circuitry, 127, 130
Slave Units
baud rate, 40, 62, 88, 111, 137, 158, 172, 180, 201, 216, 261
node number setting range, 40, 62, 87, 111, 124, 180, 201, 216, 230
specifications, 31
troubleshooting, 313
specifications
Analog Input Terminals, 137
Analog Output Terminals, 149
communications, 28
I/O Link Units, 173
Remote Adapter
16 input type, 112
Slave Units, 31
Transistor Remote Terminals
transistor input, 41
transistor output, 49, 53
system startup times, 308

T-W

Temperature Input Terminals
decimal 2-column display mode, 164
dimensions, 160, 169
DIP switch, 160
rotary switch, 161
terminal arrangement, 162
wiring, 162
terminal arrangement
Analog Output Terminals, 152
Temperature Input Terminals, 162
test, 176
Transistor Remote Terminals
transistor input
components, 42, 46
dimensions, 45
internal circuitry, 42, 46
specifications, 41
wiring, 47
transistor output
components, 50, 53
dimensions, 197
internal circuitry, 54
specifications, 49, 53
wiring, 52, 55
troubleshooting
Analog Input Units, 315
Slave Units, 313
wiring
Analog Input Terminals, 142
Analog Output Terminals, 153
Temperature Input Terminals, 162
Transistor Remote Terminals
transistor input, 47
transistor output, 52, 55

Revision History

A manual revision code appears as a suffix to the catalog number on the front cover of the manual.

Cat. No. W347-E1-06

Revision code

The following table outlines the changes made to the manual during each revision. Page numbers refer to the previous version.

Revision code	Date	Revised content
1	October 1998	Original production
2	October 2000	Reprinted due to error.
3	June 2001	Major revision to add new Units: DRT1-ID16T (-1), DRT1-ID16TA (-1), DRT1-OD16T (-1), DRT1-OD16TA (-1), DRT1-MD16T (-1), DRT1-MD16TA (-1), DRT1-MD16, DRT1-ID32ML (-1), DRT1-OD32ML (-1), DRT1-MD32ML (-1), DRT1-ID04CL (-1), DRT1-ID08CL(-1), DRT1-HD16C (-1), DRT1-OD04CL (-1), DRT1-OD08CL (-1), DRT1-WD16C(-1), DRT1-MD16C-1, and DRT1-B7AC. “CompoBus/D” deleted from manual and “DeviceNet” used instead. **Page xiv:** Precautions added on terminal polarity and other wiring specifications and Environment-resistive Slaves. **Page xi:** Manuals added to list. **Pages 5 and 6:** Callouts and graphics reworked and tables added after. **Pages 12 to 14 and elsewhere:** References to manuals simplified. **Page 14:** Connector added. **Page 15:** “Restrictions to Master Units....” removed. **Page 17:** Most of *2-3-4 Connecting Cables* moved to *4-2 Connecting Cables* with some additions. **Page 31:** *Section 3 Common Specifications* added from pages 48 and 49 and examples previously in this section moved to new *Section 6 Special I/O Slave Units Specifications.* **Pages 31 on:** General-purpose Slaves and Environment Resistive Slaves separated into two sections (with new slaves added). **Page 136:** Information moved or added to this page. **Pages 136, 141, 143, 150 to 161, and 193:** Information added on CS-series PLCs. **Pages 139 and 145:** Note added. **Pages 145 to 149:** Many changes made. **Page 162 and 180 to 184:** Additions (some pages from other sections). **Page 169:** Large addition. **Pages 169 to 177:** Command formats changed in places. **Page 190:** Small additions. **Page 192:** Change to result line of equation. **Page 193:** Addition on I/O Link Unit. **Pages 196 to 202:** Deleted. **Page 206:** *7-2 Error History* deleted. **Page 209:** *7-3-1 Master Unit Troubleshooting* deleted. **Page 218:** Table removed. **Page 222:** Title changes and pages added. **Page 222 to 240:** Changes and additions made for new Slaves. **Page 240:** New appendix added.

Revision code	Date	Revised content
04	April 2002	**Page xiii:** Minor addition made to warning information. **Page xv:** Paragraph added to first list.
05	October 2002	PC changed to PLC throughout manual. **Page 33:** First 6 rows of body of bottom table revised. **Page 34:** Row for DRT1-OD16X and DRT1-OD16X-1 combined and new row added to end of table. **Pages 91, 92, 96, 97, 101, 102:** Graphic replaced. **Page 99:** Note changed under and “m+1” changed to “n” in bottom table. **Page 102:** Bottom graphic altered. **Page 108:** Models added to table. **Pages 176, 177, 351, and 352:** Contents of table changed. **Page 263:** Contents of top table changed. **Page 287:** Note added to table.
06	September 2003	**Page 173:** Table changed to include new models. **Pages 204, 207, 210, 213:** One dimension corrected from “20” to “10” in the diagram. **Page 235:** Note added regarding Read/Write Area size settings. **Page 340:** “2.1” corrected to “1.4” as the value of Attribute 4 for the Object instance of Identity Object (0x01).

OMRON CORPORATION
FA Systems Division H.Q.
66 Matsumoto
Mishima-city, Shizuoka 411-8511
Japan
Tel: (81)55-977-9181/Fax: (81)55-977-9045

Regional Headquarters

OMRON EUROPE B.V.
Wegalaan 67-69, NL-2132 JD Hoofddorp
The Netherlands
Tel: (31)2356-81-300/Fax: (31)2356-81-388

OMRON ELECTRONICS LLC
1 East Commerce Drive, Schaumburg, IL 60173
U.S.A.
Tel: (1)847-843-7900/Fax: (1)847-843-8568

OMRON ASIA PACIFIC PTE. LTD.
83 Clemenceau Avenue,
#11-01, UE Square,
Singapore 239920
Tel: (65)6835-3011/Fax: (65)6835-2711

OMRON

Authorized Distributor:

Cat. No. W347-E1-06

Note: Specifications subject to change without notice.

Printed in Japan

Cat. No. W347-E1-06 C200HW-DRT21/CQM1-DRT21/DRT1 Series DeviceNet Slaves OPERATION MANUAL OMRON

Read and Understand this Manual

Please read and understand this manual before using the product. Please consult your OMRON representative if you have any questions or comments.

Warranty and Limitations of Liability

WARRANTY

OMRON's exclusive warranty is that the products are free from defects in materials and workmanship for a period of one year (or other period if specified) from date of sale by OMRON.

OMRON MAKES NO WARRANTY OR REPRESENTATION, EXPRESS OR IMPLIED, REGARDING NON-INFRINGEMENT, MERCHANTABILITY, OR FITNESS FOR PARTICULAR PURPOSE OF THE PRODUCTS. ANY BUYER OR USER ACKNOWLEDGES THAT THE BUYER OR USER ALONE HAS DETERMINED THAT THE PRODUCTS WILL SUITABLY MEET THE REQUIREMENTS OF THEIR INTENDED USE. OMRON DISCLAIMS ALL OTHER WARRANTIES, EXPRESS OR IMPLIED.

LIMITATIONS OF LIABILITY

OMRON SHALL NOT BE RESPONSIBLE FOR SPECIAL, INDIRECT, OR CONSEQUENTIAL DAMAGES, LOSS OF PROFITS OR COMMERCIAL LOSS IN ANY WAY CONNECTED WITH THE PRODUCTS, WHETHER SUCH CLAIM IS BASED ON CONTRACT, WARRANTY, NEGLIGENCE, OR STRICT LIABILITY.

In no event shall the responsibility of OMRON for any act exceed the individual price of the product on which liability is asserted.

IN NO EVENT SHALL OMRON BE RESPONSIBLE FOR WARRANTY, REPAIR, OR OTHER CLAIMS REGARDING THE PRODUCTS UNLESS OMRON'S ANALYSIS CONFIRMS THAT THE PRODUCTS WERE PROPERLY HANDLED, STORED, INSTALLED, AND MAINTAINED AND NOT SUBJECT TO CONTAMINATION, ABUSE, MISUSE, OR INAPPROPRIATE MODIFICATION OR REPAIR.

Application Considerations

SUITABILITY FOR USE

OMRON shall not be responsible for conformity with any standards, codes, or regulations that apply to the combination of products in the customer's application or use of the products.

At the customer's request, OMRON will provide applicable third party certification documents identifying ratings and limitations of use that apply to the products. This information by itself is not sufficient for a complete determination of the suitability of the products in combination with the end product, machine, system, or other application or use.

The following are some examples of applications for which particular attention must be given. This is not intended to be an exhaustive list of all possible uses of the products, nor is it intended to imply that the uses listed may be suitable for the products:

- Outdoor use, uses involving potential chemical contamination or electrical interference, or conditions or uses not described in this manual.
- Nuclear energy control systems, combustion systems, railroad systems, aviation systems, medical equipment, amusement machines, vehicles, safety equipment, and installations subject to separate industry or government regulations.
- Systems, machines, and equipment that could present a risk to life or property.

Please know and observe all prohibitions of use applicable to the products.

NEVER USE THE PRODUCTS FOR AN APPLICATION INVOLVING SERIOUS RISK TO LIFE OR PROPERTY WITHOUT ENSURING THAT THE SYSTEM AS A WHOLE HAS BEEN DESIGNED TO ADDRESS THE RISKS, AND THAT THE OMRON PRODUCTS ARE PROPERLY RATED AND INSTALLED FOR THE INTENDED USE WITHIN THE OVERALL EQUIPMENT OR SYSTEM.

PROGRAMMABLE PRODUCTS

OMRON shall not be responsible for the user's programming of a programmable product, or any consequence thereof.

Disclaimers

CHANGE IN SPECIFICATIONS

Product specifications and accessories may be changed at any time based on improvements and other reasons.

It is our practice to change model numbers when published ratings or features are changed, or when significant construction changes are made. However, some specifications of the products may be changed without any notice. When in doubt, special model numbers may be assigned to fix or establish key specifications for your application on your request. Please consult with your OMRON representative at any time to confirm actual specifications of purchased products.

DIMENSIONS AND WEIGHTS

Dimensions and weights are nominal and are not to be used for manufacturing purposes, even when tolerances are shown.

PERFORMANCE DATA

Performance data given in this manual is provided as a guide for the user in determining suitability and does not constitute a warranty. It may represent the result of OMRON's test conditions, and the users must correlate it to actual application requirements. Actual performance is subject to the OMRON Warranty and Limitations of Liability.

ERRORS AND OMISSIONS

The information in this manual has been carefully checked and is believed to be accurate; however, no responsibility is assumed for clerical, typographical, or proofreading errors, or omissions.