HARDWARE REFERENCE MANUAL

Accessory 11E

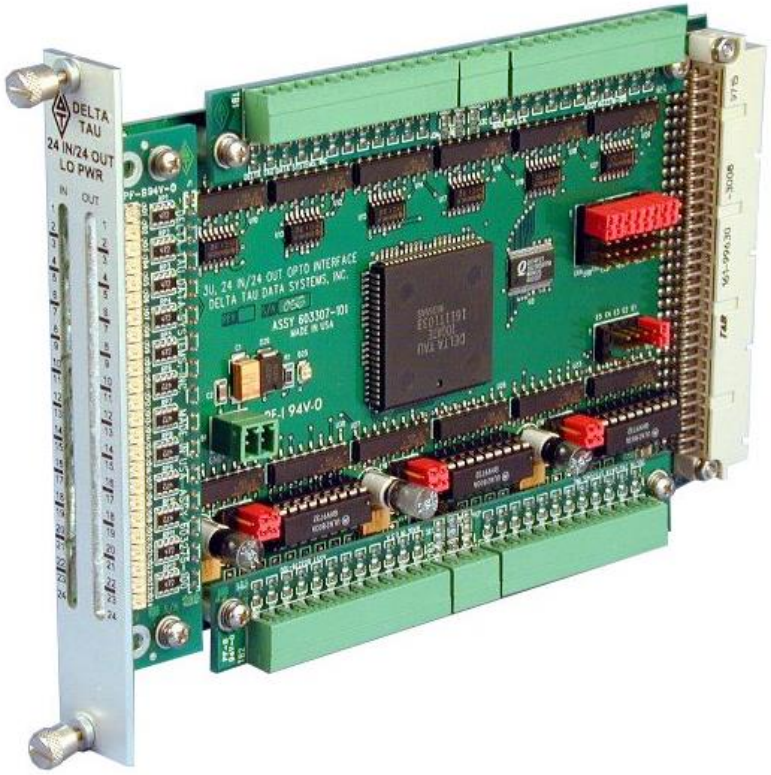

24 Opto In/24 Opto Out

3A□-603307-□U□□

January 31, 2022

Document # MN-000209

Copyright Information

© 2022 Delta Tau Data Systems, Inc. All rights reserved.

This document is furnished for the customers of Delta Tau Data Systems, Inc. Other uses are unauthorized without written permission of Delta Tau Data Systems, Inc. Information contained in this manual may be updated from time-to-time due to product improvements, etc., and may not conform in every respect to former issues.

To report errors or inconsistencies, call or email your local Omron representative

Operating Conditions

All Delta Tau Data Systems, Inc. motion controller products, accessories, and amplifiers contain static sensitive components that can be damaged by incorrect handling. When installing or handling Delta Tau Data Systems, Inc. products, avoid contact with highly insulated materials. Only qualified personnel should be allowed to handle this equipment. Before powering, please ensure there is no visible damage to the product.

In the case of industrial applications, we expect our products to be protected from hazardous or conductive materials and/or environments that could cause harm to the controller by damaging components or causing electrical shorts. Our products should not be placed in locations that can accrue a lot of dust, salt, or conductive iron-like powder. When our products are used in an industrial environment, install them into an industrial electrical cabinet or industrial PC to protect them from excessive or corrosive moisture, abnormal ambient temperatures, and conductive materials. If Delta Tau Data Systems, Inc. products are directly exposed to hazardous or conductive materials and/or environments, we cannot guarantee their operation. For your own safety, please keep the product's environmental conditions within the range outlined by the Environment Specifications section that can be located from the table of contents in this manual.

Trademarks

Other company names and product names in this document are the trademarks or registered trademarks of their respective companies.

EN Dispose in accordance with applicable regulations.

Safety Instructions

Qualified personnel must transport, assemble, install, and maintain this equipment. Properly qualified personnel are persons who are familiar with the transport, assembly, installation, and operation of equipment. The qualified personnel must know and observe the following standards and regulations:

IEC364resp.CENELEC HD 384 or DIN VDE 0100
IEC report 664 or DIN VDE 0110
National regulations for safety and accident prevention or VBG 4

Incorrect handling of products can result in injury and damage to persons and machinery. Strictly adhere to the installation instructions. Electrical safety is provided through a low-resistance earth connection. It is vital to ensure that all system components are connected to earth ground.

This product contains components that are sensitive to static electricity and can be damaged by incorrect handling. Avoid contact with high insulating materials (artificial fabrics, plastic film, etc.). Place the product on a conductive surface. Discharge any possible static electricity build-up by touching an unpainted, metal, grounded surface before touching the equipment.

Keep all covers and cabinet doors shut during operation. Be aware that during operation, the product has electrically charged components and hot surfaces. Control and power cables can carry a high voltage, even when the motor is not rotating. Never disconnect or connect the product while the power source is energized to avoid electric arcing.

Warning	A Warning identifies hazards that could result in personal injury or death. It precedes the discussion of interest.
Caution	A Caution identifies hazards that could result in equipment damage. It precedes the discussion of interest.
Note	A Note identifies information critical to the understanding or use of the equipment. It follows the discussion of interest.

MANUAL REVISION HISTORY				
REV.	**DESCRIPTION**	**DATE**	**CHG.**	**APPVD**
1	Added CE declaration	06/07/06	CP	SF
2	Revs. to J1& J2, pins 8 & 15, P. 31	05/11/07	CP	AO
3	Revs. to elec. specs, P. 3	07/27/07	CP	BP
4	Added UL seal to manual cover Updated Agency of Approval section	10/01/09	CP	SF
5	Refurbished entire manual	12/17/12	GS	RN
6	Added KC conformity	10/17/18	SM	RN
7	Added mounting and installation section	12/07/20	SM	RN
A	Added UKCA Marking to front cover and added description in Agency of Approval section	08/11/21	AE	SM
B	Updated UKCA standard	01/31/22	AE	SF

Table of Contents

INTRODUCTION **7**

SPECIFICATIONS **8**
Environmental Specifications 8
Electrical Specifications 8
Physical Specifications 8
Agency Approval and Safety 9

MOUNTING AND INSTALLATION **10**

ADDRESSING ACC-11E **11**
Turbo/Power UMAC and MACRO Station Jumper Settings 11
Legacy MACRO Station Address Jumper Settings 12
Sinking or Sourcing Output Select 13
I/O Gate Data Clock Select 13
Hardware Address Limitations 14

USING ACC-11E WITH TURBO UMAC **16**
Configuring the Control Word 16
Accessing I/O data points (M-Variables) 17

USING ACC-11E WITH POWER UMAC SCRIPT PROGRAMING **19**
Configuring the Control Word 19
Accessing I/O Data Points (Pointers) 20
Suggested M-Variables *20*

USING ACC-11E WITH POWER UMAC C PROGRAMING **21**
Setting Up Digital I/O Access 21
Function for Setting the Control Word: ACC11E_SetControlWord() *21*
Function for Reading the State of Inputs: ACC11E_GetInputState() *22*
Function for Reading the State of Outputs: ACC11E_GetOutputState() *22*
Function for Writing to Outputs: ACC11E_SetOutputState() *23*
Header and Source File *25*
User Written Functions *29*
Setting Up the Control Word 31

USING ACC-11E WITH UMAC MACRO STATION **33**
Quick Review: Nodes and Addressing 33
Setting Up The Control Word 36
Transferring Data Points over I/O Nodes 38
Preparing for I/O Data Transfer on the MACRO16 Station *39*

MS{anynode},MI71: 24-Bit Transfer *40*
MS{anynode},MI69 and MI70: 16-Bit Transfer *45*
MS{anynode}, MI171, MI172, and MI173: 24-Bit/16-Bit Transfer *49*

LAYOUTS & PINOUTS 50
Board Layout Diagrams 50
Wiring Considerations 51
Terminal Block Option 52
TB1 Top: Inputs 1 thru 12 ..... *52*
TB2 Top: Inputs 13 thru 24 ..... *52*
TB3 Top: Reference Voltages *52*
Wiring Input Terminal Blocks *53*
TB1 Bottom: Outputs 1 thru 12 ..... *54*
TB2 Bottom: Outputs 13 thru 24 ..... *54*
TB3 Bottom: Reference Voltages *54*
Wiring Output Terminal Blocks *55*
D-Sub Option 56
J1 Top: Inputs 1 thru 12 ..... *56*
J2 Top: Inputs 13 thru 24 ..... *57*
Wiring Input DB15 Connectors *58*
J1 Bottom: Outputs 1 thru 12 ..... *59*
J2 Bottom: Outputs 13 thru 24 ..... *60*
Wiring Output DB15 Connectors *61*

SCHEMATICS 63

APPENDIX A: USING THE UMAC CONFIG PRO2 TOOL 65

APPENDIX B: FULL TURBO UMAC M-VARIABLE MAPPINGS 71

APPENDIX C: FULL POWER UMAC M-VARIABLE MAPPINGS 83

APPENDIX D: THE CONTROL WORD 95

INTRODUCTION

The ACC-11E is a 24 In/24 Out general purpose I/O card. Built in the 3U euro card format, it can be used in the following products:

- Turbo UMAC
- Power UMAC
- UMAC MACRO Station

All inputs and outputs are 12-24 VDC, optically isolated, and can be configured as sinking or sourcing.

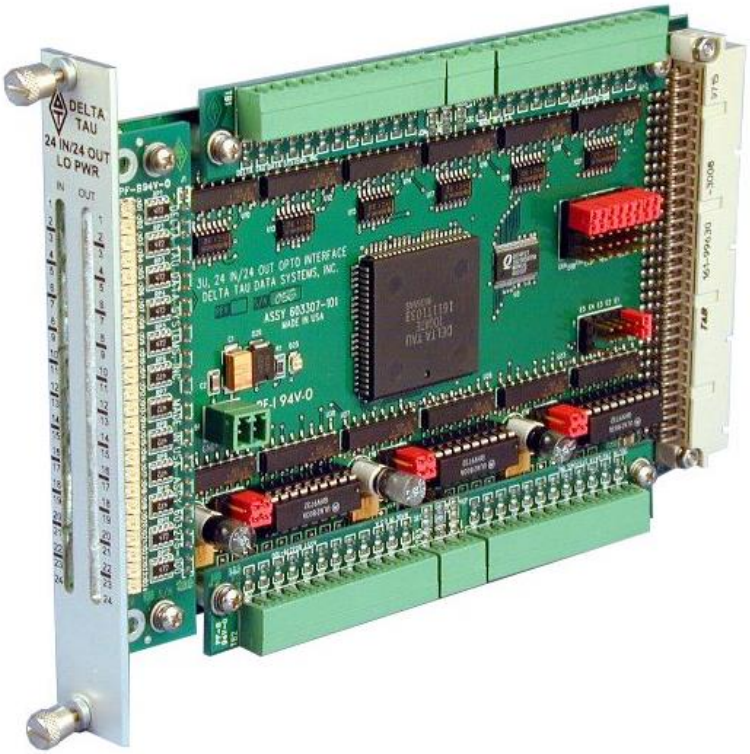

SPECIFICATIONS

Environmental Specifications

Description	Specification
Operating Temperature	0°C to 45°C,
Storage Temperature	-25°C to 70°C
Humidity	10% to 95 % non-condensing

Electrical Specifications

Description	Specification	Notes
Power Requirements	5V @ 0.05A (±10%)	
Output Current (individual)	100 mA	For UDN2981 and ULN2803
V1	12 – 24V	User-supplied voltage
Output Voltage	V1 – 1.1V	ULN2803 (See chip data sheet for details)
	V1 – 1.8V	UDN2981 (See chip data sheet for details)
Fuse	125V @ 2.0A	Manufacturer: Little Fuse

Physical Specifications

Description	Specification	Notes
Dimensions	Length: 16.256 cm (6.4 in.) Height: 10 cm (3.94 in.) Width: 2.03 cm (0.8 in.)	
Weight	180 g	Front Plate included
Terminal Block Connectors	FRONT-MC1,5/12-ST3,81 FRONT-MC1,5/5-ST3,81 FRONT-MC1,5/3-ST3,81	Terminal Blocks from Phoenix Contact. UL-94V0
DB Option Connectors	DB15 Female	UL-94V0
The width is the width of the front plate. The length and height are the dimensions of the PCB.		

Agency Approval and Safety

Item	Description
CE Mark	EN61326-1
EMC	EN55011 Class A Group 1 EN61000-4-2 EN61000-4-3 EN61000-4-4 EN61000-4-5 EN61000-4-6
UL	UL 61010-1 File E314517
cUL	CAN/CSA C22.2 No. 1010.1-92 File E314517
Flammability Class	UL 94V-0
KC	EMI: KN 11 EMS: KN 61000-6-2
UKCA	2016 No. 1091

사 용 자 안 내 문
이 기기는 업무용 환경에서 사용할 목적으로 적합성평가를 받은 기기로서 가정용 환경에서 사용하는 경우 전파간섭의 우려가 있습니다.

한국 EMC적용제품 준수사항
본 제품은 전파법(KC 규정)을 준수합니다. 제품을 사용하려면 다음 사항에 유의하십시오. 이 기기는 업무용 환경에서 사용할 목적으로 적합성평가를 받은 기기로서 가정용 환경에서 사용하는 경우 전파간섭의 우려가 있습니다. 입력에 EMC 필터, 서지 보호기, 페라이트 코어 또는 1차측의 케이블에 노이즈 필터를 입력으로 사용하십시오.

MOUNTING AND INSTALLATION

To connect a UMAC accessory, simply slide the board into any open slot of the UMAC rack. Customarily, accessories are installed from left to right as follows:

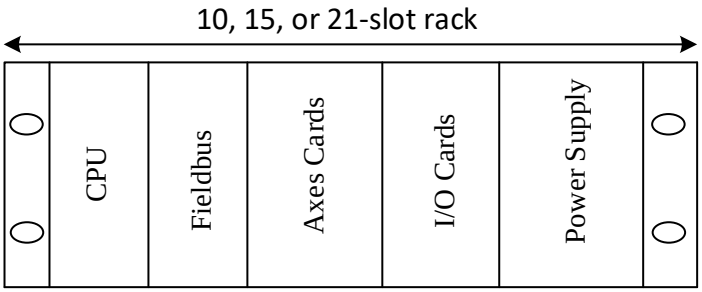

Prior to installation, make sure that you have set the jumpers and address settings to your desired requirements. Use the guide tracks that have been installed in the empty slots of your UMAC system when installing a board.
As you slide the board into the rack, use caution to ensure none of the components on the board make contact with the front plates of the boards on either side. Getting the front plate flush with the front of the rack and turning the front screws firmly will ensure a good connection with the backplane.
When removing a board from the system, the user must first pull out any wired connections from the top, bottom, and front panels then loosen the pem-nuts on the front of the rack. Next, the user can gently pull the board from the rack and use caution to ensure that none of the components on the board make contact with the boards on either side.

Caution

This product contains D-SUB style connectors. Do not overtighten any screws on mating connectors, and when possible, only tighten by hand. Overtightening, such as with manual or electric tools, may lead to the mating nut detaching when subsequently unscrewed, which may result in damage to the product, other electronics, and/or injury.

ADDRESSING ACC-11E

Several jumpers must be configured on the Accessory 11E in order for it to work properly with other I/O cards in the UMAC rack. Jumpers E1-E4 select the starting base I/O address, and for within the base address, jumpers E6A-E6H select whether the low, middle, or high byte will be used.

Turbo/Power UMAC and MACRO Station Jumper Settings

Chip Select	TURBO	MACRO	POWER		Jumpers				
			Offset	Index (n)	E1	E2	E3	E4	E6A-E6H
CS10	Y:$78C00,0,8	Y:$8800,0,8	$A00000.8.8	0	**ON**	OFF	OFF	OFF	1 to 2
CS10	Y:$78C00,8,8	Y:$8800,8,8	$A00000.16.8	0	**ON**	OFF	OFF	OFF	2 to 3
CS10	Y:$78C00,16,8	Y:$8800,16,8	$A00000.24.8	0	**ON**	OFF	OFF	OFF	4 to 5
CS12	Y:$78D00,0,8	Y:$8840,0,8	$B00000.8.8	1	OFF	**ON**	OFF	OFF	1 to 2
CS12	Y:$78D00,8,8	Y:$8840,8,8	$B00000.16.8	1	OFF	**ON**	OFF	OFF	2 to 3
CS12	Y:$78D00,16,8	Y:$8840,16,8	$B00000.24.8	1	OFF	**ON**	OFF	OFF	4 to 5
CS14	Y:$78E00,0,8	Y:$8880,0,8	$C00000.8.8	2	OFF	OFF	**ON**	OFF	1 to 2
CS14	Y:$78E00,8,8	Y:$8880,8,8	$C00000.16.8	2	OFF	OFF	**ON**	OFF	2 to 3
CS14	Y:$78E00,16,8	Y:$8880,16,8	$C00000.24.8	2	OFF	OFF	**ON**	OFF	4 to 5
CS16	Y:$78F00,0,8	Y:$88C0,0,8	$D00000.8.8	3	OFF	OFF	OFF	**ON**	1 to 2
CS16	Y:$78F00,8,8	Y:$88C0,8,8	$D00000.16.8	3	OFF	OFF	OFF	**ON**	2 to 3
CS16	Y:$78F00,16,8	Y:$88C0,16,8	$D00000.24.8	3	OFF	OFF	OFF	**ON**	4 to 5

E6A – E6H Layout Diagram

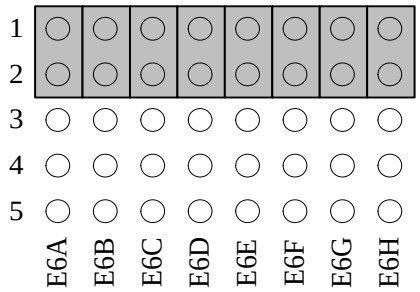

Legacy MACRO Station Address Jumper Settings

Chip Select	MACRO	Jumpers			
		E1	**E2**	**E3**	**E4**
CS10	$FFE0	**ON**	OFF	OFF	OFF
CS12	$FFE8	OFF	**ON**	OFF	OFF
CS14	$FFF0	OFF	OFF	**ON**	OFF

Sinking or Sourcing Output Select

WARNING

Jumpers E16 thru E21 generally should be left at factory defaults.

They must not be changed without also changing their respective buffer IC, ULN2803A for sinking or UDN2981A for sourcing.

Jumpers	Descriptions
E16 & E17	1-2 = Outputs 1 thru 8 Sinking 2-3 = Outputs 1 thru 8 Sourcing
E18 & E19	1-2 = Outputs 9 thru 16 Sinking 2-3 = Outputs 9 thru 16 Sourcing
E20 & E21	1-2 = Outputs 17 thru 24 Sinking 2-3 = Outputs 17 thru 24 Sourcing

I/O Gate Data Clock Select

Jumper	Function
E5	Servo Clock 2-3 Phase Clock (default)

Hardware Address Limitations

The ACC-11E has a hardware address limitation relative to the newer type B series of UMAC high-speed I/O cards. These new I/O cards have four base addresses per chip select (CS10, CS12, CS14, and CS16). This enables these cards to have up to 16 different addresses. The type A cards have one base address per chip select but also have the low-byte, middle-byte, and high-byte type of an addressing scheme and thus allow for a maximum of twelve of these I/O cards.

Name	Type	Category	Possible Number of Addresses	Maximum Number of Cards in 1 Rack
ACC-9E	A	General I/O	4	12
ACC-10E	A	General I/O	4	
ACC-11E	A	General I/O	4	
ACC-12E	A	General I/O	4	
ACC-14E	B	General I/O	16	16
ACC-28E	B	Analog I/O	16	
ACC-36E	B	Analog I/O	16	
ACC-53E	B	Feedback	16	
ACC-57E	B	Feedback	16	
ACC-58E	B	Feedback	16	
ACC-59E	B	Analog I/O	12	12
ACC-65E	B	General I/O	16	16
ACC-66E	B	General I/O	16	
ACC-67E	B	General I/O	16	
ACC-68E	B	General I/O	16	
ACC-84E	B	Feedback	12	12

Addressing Type A and Type B accessory cards requires attention to the following set of rules:

Populating Rack with Type A Cards Only (no conflicts)

In this mode, the card(s) can use any available Address.

Note

Type A cards can have up to 4 different base addresses. Because each card can be setup to use the lower, middle, or high byte of a specific base address, it is possible to populate a single rack with a maximum of 12 Type A accessory cards.

Populating Rack with Type B Cards Only (no conflicts)

In this mode, the card(s) can potentially use any available Address.

Populating Rack with Type A & Type B Cards (possible conflicts)

Typically, Type A and Type B cards should not share the same Chip Select; however, if they do, the following rules apply:

- **Type A and Type B Feedback Cards**
  Type A cards cannot share the same Chip Select as Type B Feedback cards.

- **Type A and Type B General I/O Cards**
  Type A cards can share the same Chip Select as Type B general I/O cards; however, in this mode, Type B cards naturally use the lower byte (default), and Type A cards must be set to the middle/high byte of the selected base address.

- **Type A Cards and Type B Analog Cards**
  Type A cards can share the same Chip Select as Type B analog I/O cards; however, in this mode, Type B cards naturally use the middle/high bytes (default), and Type A cards must be set to the low byte of the selected base address.

USING ACC-11E WITH TURBO UMAC

The procedure for using the ACC-11E with Turbo UMAC has two steps:

1. **Configure the Control Word**
2. **Accessing I/O data points (M-Variables)**

Configuring the Control Word

Write a 7 to the control word which is located at {base address + 7}, n, 8 where:

n = 0 if using low byte addressing
n = 8 if using middle byte addressing
n = 16 if using high byte addressing

The control word must be configured every time the UMAC is powered or reset. This can be done in an initialization (one that disables itself) PLC.

Example 1: Setting up Control Word at Startup for Card at Base Address $78C00, Low Byte Addressing

```
M3307->Y:$78C07,0,8    // I/O Card 1 control register from suggested M-Variables

Open PLC 1 Clear
M3307=$07
Disable PLC 1
Close
```

Example 2: Setting up Control Word at Startup for 3 Cards at Base Address $78C00; Low, Middle, and High Byte Addressing

```
M3307->Y:$78C07,0,8  // I/O Card 1 control register using low byte
M3317->Y:$78C07,8,8  // I/O Card 2 control register using middle byte
M3327->Y:$78C07,16,8 // I/O Card 3 control register using high byte

Open PLC 1 Clear
M3307=$07
M3317=$07
M3327=$07
Disable PLC 1
Close
```

Note

See Appendix for control word details and explanations.

Accessing I/O data points (M-Variables)

Every ACC-11E has 48 bits of I/O data, which are comprised of one byte (8 bits) at the base address plus five more bytes (8 x 6 = 48) at the next five consecutive addresses. Examples:

I/O data bits for card at base address $78C00 using low bytes		**I/O data bits for card at base address $78C00 using high bytes**	
Y:$078C00,0,8	Inputs 1-8	Y:$078C00,16,8	Inputs 1-8
Y:$078C01,0,8	Inputs 9-16	Y:$078C01,16,8	Inputs 9-16
Y:$078C02,0,8	Inputs 17-24	Y:$078C02,16,8	Inputs 17-24
Y:$078C03,0,8	Outputs 1-8	Y:$078C03,16,8	Outputs 1-8
Y:$078C04,0,8	Outputs 9-16	Y:$078C04,16,8	Outputs 9-16
Y:$078C05,0,8	Outputs 17-24	Y:$078C05,16,8	Outputs 17-24

Example: Bitwise M-Variable mapping for ACC-11E at base address $78C00 using low bytes:

```
#define Input1          M7000    Input1->Y:$078C00,0,1
#define Input2          M7001    Input2->Y:$078C00,1,1
#define Input3          M7002    Input3->Y:$078C00,2,1
#define Input4          M7003    Input4->Y:$078C00,3,1
#define Input5          M7004    Input5->Y:$078C00,4,1
#define Input6          M7005    Input6->Y:$078C00,5,1
#define Input7          M7006    Input7->Y:$078C00,6,1
#define Input8          M7007    Input8->Y:$078C00,7,1
#define Input9          M7008    Input9->Y:$078C01,0,1
#define Input10         M7009    Input10->Y:$078C01,1,1
#define Input11         M7010    Input11->Y:$078C01,2,1
#define Input12         M7011    Input12->Y:$078C01,3,1
#define Input13         M7012    Input13->Y:$078C01,4,1
#define Input14         M7013    Input14->Y:$078C01,5,1
#define Input15         M7014    Input15->Y:$078C01,6,1
#define Input16         M7015    Input16->Y:$078C01,7,1
#define Input17         M7016    Input17->Y:$078C02,0,1
#define Input18         M7017    Input18->Y:$078C02,1,1
#define Input19         M7018    Input19->Y:$078C02,2,1
#define Input20         M7019    Input20->Y:$078C02,3,1
#define Input21         M7020    Input21->Y:$078C02,4,1
#define Input22         M7021    Input22->Y:$078C02,5,1
#define Input23         M7022    Input23->Y:$078C02,6,1
#define Input24         M7023    Input24->Y:$078C02,7,1

#define Output1         M7024    Output1->Y:$078C03,0,1
#define Output2         M7025    Output2->Y:$078C03,1,1
#define Output3         M7026    Output3->Y:$078C03,2,1
#define Output4         M7027    Output4->Y:$078C03,3,1
#define Output5         M7028    Output5->Y:$078C03,4,1
#define Output6         M7029    Output6->Y:$078C03,5,1
#define Output7         M7030    Output7->Y:$078C03,6,1
#define Output8         M7031    Output8->Y:$078C03,7,1
#define Output9         M7032    Output9->Y:$078C04,0,1
#define Output10        M7033    Output10->Y:$078C04,1,1
#define Output11        M7034    Output11->Y:$078C04,2,1
#define Output12        M7035    Output12->Y:$078C04,3,1
#define Output13        M7036    Output13->Y:$078C04,4,1
#define Output14        M7037    Output14->Y:$078C04,5,1
#define Output15        M7038    Output15->Y:$078C04,6,1
#define Output16        M7039    Output16->Y:$078C04,7,1
#define Output17        M7040    Output17->Y:$078C05,0,1
#define Output18        M7041    Output18->Y:$078C05,1,1
#define Output19        M7042    Output19->Y:$078C05,2,1
#define Output20        M7043    Output20->Y:$078C05,3,1
#define Output21        M7044    Output21->Y:$078C05,4,1
#define Output22        M7045    Output22->Y:$078C05,5,1
#define Output23        M7046    Output23->Y:$078C05,6,1
#define Output24        M7047    Output24->Y:$078C05,7,1
```

Note

See Appendix for suggested M-Variables for additional cards.

Note

Suggested M-Variable definitions are also available with the UMAC Config. Pro2 tool (see Appendix).

Note

Most systems only use low byte addressing

USING ACC-11E WITH POWER UMAC SCRIPT PROGRAMING

The following section describes two software configuration procedures that are needed when using the Power PMAC script programming language:

1. **Configuring the Control Word**
2. **Accessing I/O data points (pointers)**

Configuring the Control Word

Write a 7 to the control word which is located at {base address + 7}.n.8 where:

n = 8 if using low byte addressing
n = 16 if using middle byte addressing
n = 24 if using high byte addressing

The control word must be configured every time the POWER UMAC is powered or reset. This can be done in an initialization (one that disables itself) PLC, usually PLC 1.

Example: Setting up Control Word at Startup for Card at $A00000, Low Byte Addressing

```
ptr IoCard0Reg7->u.io:$A0001C.8.8 // I/O Card 0 control register from suggested M-Variables

open plc 1
IoCard0Reg7=$7;
disable plc 1;
close
```

Example: Setting up Control Word at Startup for 3 Cards at Base Address $A00000; Low, Middle, and High Byte Addressing

```
ptr IoCard0Reg7->u.io:$A0001C.8.8 // I/O Card 0 control register from suggested M-Variables
ptr IoCard1Reg7->u.io:$A0001C.16.8 // I/O Card 1 control register from suggested M-Variables
ptr IoCard2Reg7->u.io:$A0001C.24.8 // I/O Card 2 control register from suggested M-Variables

open plc 1
IoCard0Reg7=$7;
IoCard1Reg7=$7;
IoCard2Reg7=$7;
disable plc 1;
close
```

Note

See Appendix for control word details and explanations.

Accessing I/O Data Points (Pointers)

The simplest way to access I/O points on the ACC-11E is to define pointer variables (M-Variables) that point to each bit on the I/O device.

Suggested M-Variables

Base offset $A00000, low byte addressing

```
// Single-bit variables used for accessing I/O points
ptr Input1->u.io:$A00000.8.1          // I/O Card 1 Input1
ptr Input2->u.io:$A00000.9.1          // I/O Card 1 Input2
ptr Input3->u.io:$A00000.10.1         // I/O Card 1 Input3
ptr Input4->u.io:$A00000.11.1         // I/O Card 1 Input4
ptr Input5->u.io:$A00000.12.1         // I/O Card 1 Input5
ptr Input6->u.io:$A00000.13.1         // I/O Card 1 Input6
ptr Input7->u.io:$A00000.14.1         // I/O Card 1 Input7
ptr Input8->u.io:$A00000.15.1         // I/O Card 1 Input8
ptr Input9->u.io:$A00004.8.1          // I/O Card 1 Input9
ptr Input10->u.io:$A00004.9.1         // I/O Card 1 Input10
ptr Input11->u.io:$A00004.10.1        // I/O Card 1 Input11
ptr Input12->u.io:$A00004.11.1        // I/O Card 1 Input12
ptr Input13->u.io:$A00004.12.1        // I/O Card 1 Input13
ptr Input14->u.io:$A00004.13.1        // I/O Card 1 Input14
ptr Input15->u.io:$A00004.14.1        // I/O Card 1 Input15
ptr Input16->u.io:$A00004.15.1        // I/O Card 1 Input16
ptr Input17->u.io:$A00008.8.1         // I/O Card 1 Input17
ptr Input18->u.io:$A00008.9.1         // I/O Card 1 Input18
ptr Input19->u.io:$A00008.10.1        // I/O Card 1 Input19
ptr Input20->u.io:$A00008.11.1        // I/O Card 1 Input20
ptr Input21->u.io:$A00008.12.1        // I/O Card 1 Input21
ptr Input22->u.io:$A00008.13.1        // I/O Card 1 Input22
ptr Input23->u.io:$A00008.14.1        // I/O Card 1 Input23
ptr Input24->u.io:$A00008.15.1        // I/O Card 1 Input24
ptr Output1->u.io:$A0000C.8.1         // I/O Card 1 Output1
ptr Output2->u.io:$A0000C.9.1         // I/O Card 1 Output2
ptr Output3->u.io:$A0000C.10.1        // I/O Card 1 Output3
ptr Output4->u.io:$A0000C.11.1        // I/O Card 1 Output4
ptr Output5->u.io:$A0000C.12.1        // I/O Card 1 Output5
ptr Output6->u.io:$A0000C.13.1        // I/O Card 1 Output6
ptr Output7->u.io:$A0000C.14.1        // I/O Card 1 Output7
ptr Output8->u.io:$A0000C.15.1        // I/O Card 1 Output8
ptr Output9->u.io:$A00010.8.1         // I/O Card 1 Output9
ptr Output10->u.io:$A00010.9.1        // I/O Card 1 Output10
ptr Output11->u.io:$A00010.10.1       // I/O Card 1 Output11
ptr Output12->u.io:$A00010.11.1       // I/O Card 1 Output12
ptr Output13->u.io:$A00010.12.1       // I/O Card 1 Output13
ptr Output14->u.io:$A00010.13.1       // I/O Card 1 Output14
ptr Output15->u.io:$A00010.14.1       // I/O Card 1 Output15
ptr Output16->u.io:$A00010.15.1       // I/O Card 1 Output16
ptr Output17->u.io:$A00014.8.1        // I/O Card 1 Output17
ptr Output18->u.io:$A00014.9.1        // I/O Card 1 Output18
ptr Output19->u.io:$A00014.10.1       // I/O Card 1 Output19
ptr Output20->u.io:$A00014.11.1       // I/O Card 1 Output20
ptr Output21->u.io:$A00014.12.1       // I/O Card 1 Output21
ptr Output22->u.io:$A00014.13.1       // I/O Card 1 Output22
ptr Output23->u.io:$A00014.14.1       // I/O Card 1 Output23
ptr Output24->u.io:$A00014.15.1       // I/O Card 1 Output24

// Byte-wide variables used for power-on configuration
ptr IoCard1Reg0->u.io:$A00000.8.8     // I/O Card 1 Inputs 1-8 as byte
ptr IoCard1Reg1->u.io:$A00004.8.8     // I/O Card 1 Inputs 9-16 as byte
ptr IoCard1Reg2->u.io:$A00008.8.8     // I/O Card 1 Inputs 17-24 as byte
ptr IoCard1Reg3->u.io:$A0000C.8.8     // I/O Card 1 Outputs 1-8 as byte
ptr IoCard1Reg4->u.io:$A00010.8.8     // I/O Card 1 Outputs 9-16 as byte
ptr IoCard1Reg5->u.io:$A00014.8.8     // I/O Card 1 Outputs 17-24 as byte
ptr IoCard1Reg6->u.io:$A00018.8.8     // I/O Card 1 latch inputs
ptr IoCard1Reg7->u.io:$A0001C.8.8     // I/O Card 1 control register
```

See Appendix for suggested M-Variables for additional cards.

USING ACC-11E WITH POWER UMAC C PROGRAMING

Setting Up Digital I/O Access

Delta Tau has developed the following functions which can be used to setup the ACC-11E using the C Programming Language. The last entry in the list describes, as an alternative, how to create user written functions.

- Function for Setting the Control Word: ACC11E_SetControlWord()
- Function for Reading the State of Inputs: ACC11E_GetInputState()
- Function for Reading the State of Outputs: ACC11E_GetOutputState()
- Function for Writing to Outputs: ACC11E_SetOutputState()
- User Written Functions

Function for Setting the Control Word: ACC11E_SetControlWord()

Two parameters must be passed in the calling function:

BaseAddressOffset: One of the four base addresses (jumper selected) ACC-11E can take
=0xA00000
=0xB00000
=0xC00000
=0xD00000

ByteSelect: The byte used (jumper selected) for the I/O bits on this card
=1 for low byte
=2 for middle byte
=3 for high byte

The function is of type void, so it will not return any values.

```
void ACC11E_SetControlWord(unsigned int BaseAddressOffset, unsigned int ByteSelect)
/*
Input:
BaseAddressOffset: IO Card Base Address offset
ByteSelect: =1 for lowest 8 bits, =2 for middle 8 bits, =3 for high 8 bits
ControlWord: Control word value to which to set the card's Control Word
*/
{
        volatile unsigned int *ioptr; // Create I/O pointer
        ioptr = piom + BaseAddressOffset/4 + 7;// Initialize I/O pointer to Control Word register
        *ioptr = 7 << (8*ByteSelect); // Write Control Word value to register
        return;
}
```

Note

See Appendix for control word details and explanations.

Function for Reading the State of Inputs: ACC11E_GetInputState()

Three parameters must be passed in the calling function:

BaseAddressOffset: One of the four base addresses (jumper selected) ACC-11E can take
=0xA00000
=0xB00000
=0xC00000
=0xD00000

ByteSelect: The byte used (jumper selected) for the I/O bits on this card
=1 for low byte
=2 for middle byte
=3 for high byte

InputNumber: The number of the Input pin whose state one desires to read or modify.
Inputs are numbered 1–24 on ACC-11E

The function will return the **state** of the specified pin as an unsigned int:
=0, pin is low
=1, pin is high

```
unsigned int ACC11E_GetInputState(unsigned int BaseAddressOffset, unsigned int ByteSelect,
unsigned int InputNumber)
/*
Input:
-------
BaseAddressOffset: I/O Card Base Address Offset
InputNumber: Input Pin Number (1-24)
ByteSelect: =1 for lowest 8 bits, =2 for middle 8 bits, =3 for high 8 bits

Output:
-------
State of the I/O pin specified*/
{
        volatile unsigned int *ioptr; // Create I/O pointer
        // Compute location for high bit
        unsigned int HighBitInCorrectLocation=0,ShiftValue;
        InputNumber--;
        ShiftValue = InputNumber%8 + 8*(ByteSelect-1);
        HighBitInCorrectLocation = 1 << ShiftValue;  // Shift bit to that location
        ioptr = piom + BaseAddressOffset/4;          // Initialize pointer
        ioptr += InputNumber/8;       // Increment to register containing the I/O bit
        // Return state of I/O point
        return ((*ioptr >> 8) & HighBitInCorrectLocation) >> ShiftValue;
}
```

Function for Reading the State of Outputs: ACC11E_GetOutputState()

Three parameters must be passed in the calling function:

BaseAddressOffset: One of the four base addresses (jumper selected) ACC-11E can take
=0xA00000
=0xB00000
=0xC00000
=0xD00000

ByteSelect: The byte used (jumper selected) for the I/O bits on this card
=1 for low byte
=2 for middle byte
=3 for high byte

OutputNumber: The number of the Onput pin whose state one desires to read or modify.
Outputs are numbered 1–24 on ACC-11E

The function will return the **state** of the specified pin as an unsigned int:
=0, pin is low
=1, pin is high

```
unsigned int ACC11E_GetOutputState(unsigned int BaseAddressOffset, unsigned int ByteSelect,
unsigned int OutputNumber)
/*
Input:
-------
BaseAddressOffset: I/O Card Base Address Offset
InputNumber: Input Pin Number (1-24)
ByteSelect: =1 for lowest 8 bits, =2 for middle 8 bits, =3 for high 8 bits

Output:
-------
State of the I/O pin specified*/
{
        volatile unsigned int *ioptr; // Create I/O pointer
        // Compute location for high bit
        unsigned int HighBitInCorrectLocation=0,ShiftValue;
        OutputNumber--;
        ShiftValue=OutputNumber%8 + 8*(ByteSelect-1);
        HighBitInCorrectLocation = 1 << ShiftValue;  // Shift bit to that location
        ioptr = piom + BaseAddressOffset/4;          // Initialize pointer
        ioptr += OutputNumber/8 + 3;  // Increment to register containing the I/O bit
        // Return state of I/O point
        return ((*ioptr >> 8) & HighBitInCorrectLocation) >> ShiftValue;
}
```

Function for Writing to Outputs: ACC11E_SetOutputState()

Four parameters must be passed in the calling function:

BaseAddressOffset: One of the four base addresses (jumper selected) ACC-11E can take
=0xA00000
=0xB00000
=0xC00000
=0xD00000

ByteSelect: The byte used (jumper selected) for the I/O bits on this card
=1 for low byte
=2 for middle byte
=3 for high byte

OutputNumber: The number of the Output pin whose state one desires to read or modify.
Outputs are numbered 1–24 on ACC-11E

State: The state to which the desires to set the I/O pin.
=0, pin is OFF (low=false)
=1, pin is ON (high=true)

The function is of type void, so it will not return any values.

```
void ACC11E_SetOutputState(unsigned int BaseAddressOffset, unsigned int ByteSelect, unsigned int
OutputNumber, unsigned int State)
/*
Input:
BaseAddressOffset: I/O Card Base Address offset
ByteSelect: =1 for lowest 8 bits, =2 for middle 8 bits, =3 for high 8 bits
PinNumber: Output Pin Number (1-24)
State: Desired digital state of pin (0 = OFF, 1 = ON)
*/
{
        volatile unsigned int *ioptr; // Create I/O pointer
        // Compute location for high bit
        unsigned int HighBitInCorrectLocation;
        OutputNumber--;
        HighBitInCorrectLocation = 1 << (OutputNumber%8 + 8*ByteSelect);
        ioptr = piom + BaseAddressOffset/4;   // Initialize pointer
        ioptr += OutputNumber/8 + 3;  // Increment to register containing the I/O bit
        if(State==1)   // If the user wants the pin to be ON (high true)
        {// Logical OR with the bit the user desires to activate
                *ioptr |= HighBitInCorrectLocation;
        } else {
        // Logical AND the register with a 0 in the desired location to bring the pin's state low
        // right shift to push out garbage in lowest 8 bits, then shift back up 8 bits to have
        // data in the proper location
                *ioptr &= (((~0)^HighBitInCorrectLocation) >> 8) << 8;
        }

        return;
}
```

Header and Source File

The code for "acc11e.h" and "acc11e.c", given below, contains the definitions for using the above functions, prototypes, and the above listed functions. "acc11.h" should be included whenever using the above ACC-11E C code. The files, acc11e.h and acc11e.c, must be put into the same folder as the C program (BGCPLC, RTICPLC, or Background C Program.

```
#include "acc11e.h"
```

Below is the full code for both acc11e.h and acc11e.c.

acc11e.h

```
#include <gplib.h>
#include <RtGpShm.h>   // Global Rt/Gp Shared memory pointers
//-------------------------------------------------------------
// The following is a projpp created file from the User defines
//-------------------------------------------------------------
#include "../../Include/pp_proj.h"

// Corresponds to E1 installed on ACC-11E, Turbo base address of $78C00
#define ACC11E_BaseAddressOffset_E1 0xA00000
// Corresponds to E2 installed on ACC-11E, Turbo base address of $78D00
#define ACC11E_BaseAddressOffset_E2 0xB00000
// Corresponds to E3 installed on ACC-11E, Turbo base address of $78E00
#define ACC11E_BaseAddressOffset_E3 0xC00000
// Corresponds to E4 installed on ACC-11E, Turbo base address of $78F00
#define ACC11E_BaseAddressOffset_E4 0xD00000

#define ON                    1       // Assumes that (logic high)=true
#define OFF                   0       // Assumes that (logic low)=false
#define ByteSelectLow         1
#define ByteSelectMiddle      2
#define ByteSelectHigh        3

void ACC11E_SetControlWord(unsigned int BaseAddressOffset, unsigned int ByteSelect);
unsigned int ACC11E_GetInputState(unsigned int BaseAddressOffset, unsigned int ByteSelect,
unsigned int InputNumber);
unsigned int ACC11E_GetOutputState(unsigned int BaseAddressOffset, unsigned int ByteSelect,
unsigned int OutputNumber);
void ACC11E_SetOutputState(unsigned int BaseAddressOffset, unsigned int ByteSelect, unsigned int
OutputNumber, unsigned int State);
```

acc11e.c

```
#include <gplib.h>
#include <RtGpShm.h>   // Global Rt/Gp Shared memory pointers
//-------------------------------------------------------------
// The following is a projpp created file from the User defines
//-------------------------------------------------------------
#include "acc11e.h"

void ACC11E_SetControlWord(unsigned int BaseAddressOffset, unsigned int ByteSelect)
/*
Input:
BaseAddressOffset: IO Card Base Address offset
ByteSelect: =1 for lowest 8 bits, =2 for middle 8 bits, =3 for high 8 bits
ControlWord: Control word value to which to set the card's Control Word
*/
{
        volatile unsigned int *ioptr; // Create I/O pointer
        ioptr = piom + BaseAddressOffset/4 + 7;// Initialize I/O pointer to Control Word register
        *ioptr = 7 << (8*ByteSelect); // Write Control Word value to register
        return;
}

unsigned int ACC11E_GetInputState(unsigned int BaseAddressOffset, unsigned int ByteSelect,
unsigned int InputNumber)
/*
Input:
-------
BaseAddressOffset: I/O Card Base Address Offset
InputNumber: Input Pin Number (1-24)
ByteSelect: =1 for lowest 8 bits, =2 for middle 8 bits, =3 for high 8 bits

Output:
-------
State of the I/O pin specified*/
{
        volatile unsigned int *ioptr; // Create I/O pointer
        // Compute location for high bit
        unsigned int HighBitInCorrectLocation=0,ShiftValue;
        InputNumber--;
        ShiftValue = InputNumber%8 + 8*(ByteSelect-1);
        HighBitInCorrectLocation = 1 << ShiftValue;  // Shift bit to that location
        ioptr = piom + BaseAddressOffset/4;          // Initialize pointer
        ioptr += InputNumber/8;       // Increment to register containing the I/O bit
        // Return state of I/O point
        return ((*ioptr >> 8) & HighBitInCorrectLocation) >> ShiftValue;
}
unsigned int ACC11E_GetOutputState(unsigned int BaseAddressOffset, unsigned int ByteSelect,
unsigned int OutputNumber)
/*
Input:
-------
BaseAddressOffset: I/O Card Base Address Offset
InputNumber: Input Pin Number (1-24)
ByteSelect: =1 for lowest 8 bits, =2 for middle 8 bits, =3 for high 8 bits

Output:
-------
State of the I/O pin specified*/
{
        volatile unsigned int *ioptr; // Create I/O pointer
        // Compute location for high bit
        unsigned int HighBitInCorrectLocation=0,ShiftValue;
        OutputNumber--;
        ShiftValue=OutputNumber%8 + 8*(ByteSelect-1);
        HighBitInCorrectLocation = 1 << ShiftValue;  // Shift bit to that location
        ioptr = piom + BaseAddressOffset/4;          // Initialize pointer
        ioptr += OutputNumber/8 + 3;  // Increment to register containing the I/O bit
        // Return state of I/O point
        return ((*ioptr >> 8) & HighBitInCorrectLocation) >> ShiftValue;
```

```
}

void ACC11E_SetOutputState(unsigned int BaseAddressOffset, unsigned int ByteSelect, unsigned int
OutputNumber, unsigned int State)
/*
Input:
BaseAddressOffset: I/O Card Base Address offset
ByteSelect: =1 for lowest 8 bits, =2 for middle 8 bits, =3 for high 8 bits
PinNumber: Output Pin Number (1-24)
State: Desired digital state of pin (0 = OFF, 1 = ON)
*/
{
        volatile unsigned int *ioptr; // Create I/O pointer
        // Compute location for high bit
        unsigned int HighBitInCorrectLocation;
        OutputNumber--;
        HighBitInCorrectLocation = 1 << (OutputNumber%8 + 8*ByteSelect);
        ioptr = piom + BaseAddressOffset/4;   // Initialize pointer
        ioptr += OutputNumber/8 + 3;  // Increment to register containing the I/O bit
        if(State==1)   // If the user wants the pin to be ON (high true)
        {// Logical OR with the bit the user desires to activate
                *ioptr |= HighBitInCorrectLocation;
        } else {
        // Logical AND the register with a 0 in the desired location to bring the pin's state low
        // right shift to push out garbage in lowest 8 bits, then shift back up 8 bits to have
        // data in the proper location
                *ioptr &= (((~0)^HighBitInCorrectLocation) >> 8) << 8;
        }

        return;
}
```

Example: Reading from and Writing to I/O Points on One ACC-11E with CPLC0

This example is for an ACC-11E at base address offset $A00000 with low-byte addressing.

Every scan, the following Background CPLC (BGCPLC0) reads all inputs on the ACC-11E and places them into P-Variables (P7000–P7023) for general purpose use. The BGCPLC will also read from P-Variables (P8000–P8023) and write their values to the output pins of ACC-11E as follows:

P-Variable Number	Pin Number
P7000	Input 0
P7001	Input 1
P7002	Input 2
P7003	Input 3
P7004	Input 4
P7005	Input 5
P7006	Input 6
P7007	Input 7
P7008	Input 8
P7009	Input 9
P7010	Input 10
P7011	Input 11
P7012	Input 12
P7013	Input 13
P7014	Input 14
P7015	Input 15
P7016	Input 16
P7017	Input 17
P7018	Input 18
P7019	Input 19
P7020	Input 20
P7021	Input 21
P7022	Input 22
P7023	Input 23

P-Variable Number	Pin Number
P8000	Output 0
P8001	Output 1
P8002	Output 2
P8003	Output 3
P8004	Output 4
P8005	Output 5
P8006	Output 6
P8007	Output 7
P8008	Output 8
P8009	Output 9
P8010	Output 10
P8011	Output 11
P8012	Output 12
P8013	Output 13
P8014	Output 14
P8015	Output 15
P8016	Output 16
P8017	Output 17
P8018	Output 18
P8019	Output 19
P8020	Output 20
P8021	Output 21
P8022	Output 22
P8023	Output 23

Example Code: Using BGCPLC1 as an example.

This example assumes that "acc11e.h" and "acc11e.c" have already been placed into the same folder as the BGCPLC under C Language→CPLCs→bgcplc00 in the Power PMAC IDE Solution Explorer.

```
#include <gplib.h>
#include <stdio.h>
#include <dlfcn.h>

#include "../../Include/pp_proj.h"
#include "acc11e.h"

void user_plcc()
{
        unsigned int ChannelNumber, ArrayIndex; // Allocate indices

        for(ChannelNumber = 1; ChannelNumber < 25; ChannelNumber++)
        {
                ArrayIndex = ChannelNumber - 1;
                /* Copy the state of each input into P7000-P7023 */
                pshm->P[7000 + ArrayIndex] =
(double)ACC11E_GetInputState(ACC11E_BaseAddressOffset_E1, ByteSelectLow, ChannelNumber);
                /* Copy the state of P8000-P8023 into outputs 1-24 */
                ACC11E_SetOutputState(ACC11E_BaseAddressOffset_E1, ByteSelectLow, ChannelNumber,
(unsigned int)pshm->P[8000 + ArrayIndex]);
        }
        return;
}
```

User Written Functions

User written functions can be created as an alternative to the above described functions.
To do so:

- Point a `volatile unsigned int*` pointer variable to the desired ACC-11E memory location
- Perform a whole 32-bit read of the memory location
- To read I/O states, mask and shift to read the appropriate bit in the word; i.e., the state of the I/O point
- To write I/O states, perform a read-modify-write to change the appropriate bit in the word (e.g., to enable or disable an output)

Table of ACC-11E I/O Registers in C

To access the I/O pins in ACC-11E, point a volatile unsigned int* pointer to the following registers:

Base Address A00000	Base Address B00000	Base Address C00000	Base Address D00000	Register Description
piom+0xA00000/4+0	piom+0xB00000/4+0	piom+0xC00000/4+0	piom+0xD00000/4+0	Inputs 1–8
piom+0xA00000/4+1	piom+0xB00000/4+1	piom+0xC00000/4+1	piom+0xD00000/4+1	Inputs 9–16
piom+0xA00000/4+2	piom+0xB00000/4+2	piom+0xC00000/4+2	piom+0xD00000/4+2	Inputs 17–24
piom+0xA00000/4+3	piom+0xB00000/4+3	piom+0xC00000/4+3	piom+0xD00000/4+3	Outputs 1–8
piom+0xA00000/4+4	piom+0xB00000/4+4	piom+0xC00000/4+4	piom+0xD00000/4+4	Outputs 9–16
piom+0xA00000/4+5	piom+0xB00000/4+5	piom+0xC00000/4+5	piom+0xD00000/4+5	Outputs 17–24
piom+0xA00000/4+7	piom+0xB00000/4+7	piom+0xC00000/4+7	piom+0xD00000/4+7	Control Word

The useful data in each of these registers will be found in bits 8–32; the ACC-11E in Power PMAC does not use bits 0–7 of any of its registers. The base addresses (left to right four columns) and bytes (right end column) are selected with jumpers (see Addressing Setup and Jumper Settings section).

Only whole words at a time can be read in C; therefore, it is necessary to mask (using the bitwise "&" operator) and shift (using the "<<" and ">>" operators) to obtain bit values.

A set of pointer variables can be predefined to each I/O register. Alternatively, a set of functions can be created for reading and writing that will automatically point to, read from, and/or modify the appropriate memory location, given the card's base address, byte select, and pin number.

Setting Up the Control Word

The Control Word must be set equal to 7 every startup.

The function of each bit in the control word is as follows:

Control Word Bit Number	Value	I/O Bits Modified	I/O Bits Function
0	1	0–7	Inputs 1-8
1	1	8–15	Inputs 9-16
2	1	16–23	Inputs 17-24
3	0	24–31	Outputs 1-8
4	0	32–39	Outputs 9-16
5	0	40–47	Outputs 17-24
6	0	None	Register Select
7	0	None	Register Select

Example: Setting the Control Word in C in a Background C Program

This example Background C Program sets the Control Word equal to 7 for an ACC-11E at base address offset $A00000 with low byte addressing using a Background C Program, and then returns.

```
#include <gplib.h>   // Global Gp Shared memory pointer
#include "../../Include/pp_proj.h"
#include "acc11e.h"

int main(void)
{
        InitLibrary();
        ACC11E_SetControlWord(ACC11E_BaseAddressOffset_E1, ByteSelectLow);
        CloseLibrary();
        return 0;
}
```

In order for this program to run at startup, make sure to enable that option. For example, here a project called “MultithreadedIO” has been created with the “acc11e_controlword” program created under C Language→Background Programs. Then, from within the IDE Solution Explorer tree, go to C Language→Background Programs→acc11e_controlword, and then right-click on the “acc11e_controlword” folder name and select Properties. Then, in the Properties tab, under “CPLC Startup Option,” put a “1” (without the quotation marks) into the field next to the parameter “Run at startup” (see the screenshot below).

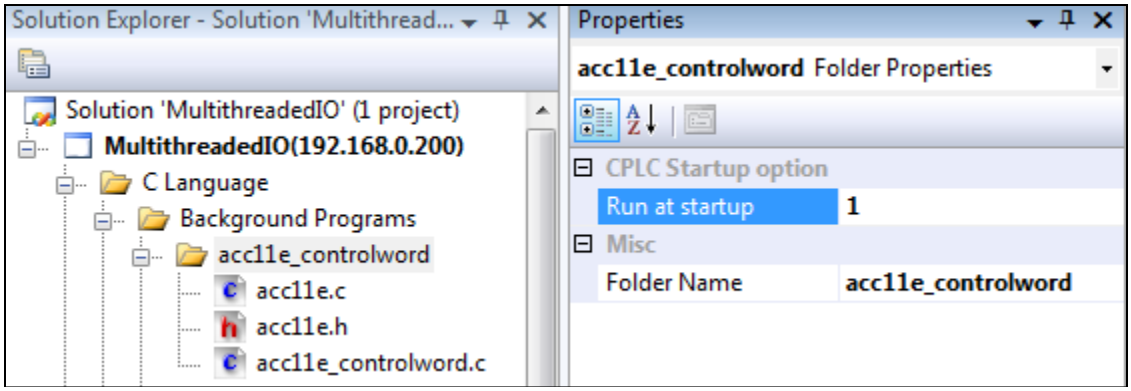

Remember to put acc11e.c and acc11e.h from the previous section into the same folder as this BGCPLC in order to run it properly.

Note

See Appendix for control word details and explanations.

USING ACC-11E WITH UMAC MACRO STATION

Setting up an ACC-11E on a MACRO station requires the following steps:

- Establishing communication with the MACRO Station and enabling nodes (Covered in alternate documentation i.e. MACRO16 CPU User Manual)
- Setting up the control word
- Transferring data over I/O Nodes

Quick Review: Nodes and Addressing

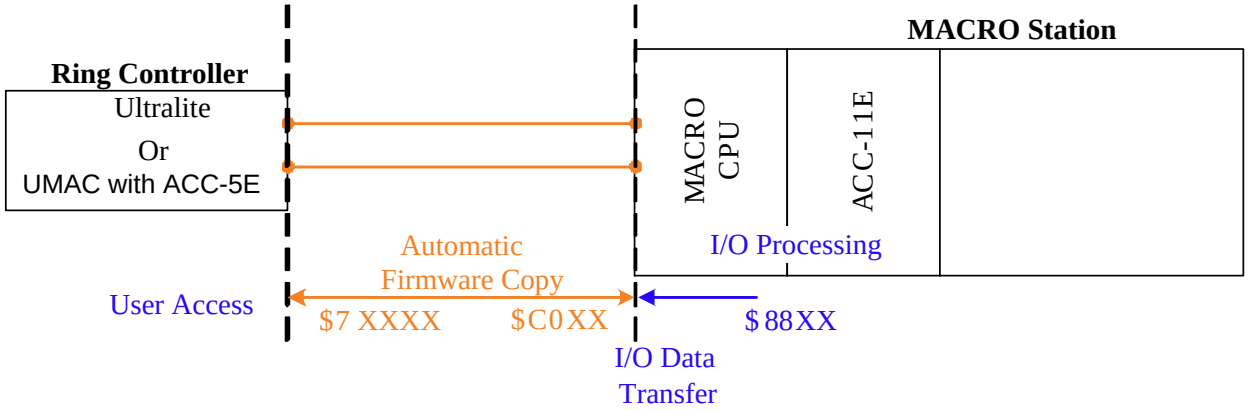

The above diagram represents three basic processes.

1. Starting on the right with I/O Processing, information is transferred to or from the ACC-11E I/O Gate and the MACRO-Station CPU Gate 2B.
2. I/O is transferred between MACRO Station ($C0XX) and Ring Controller ($7XXXX) nodes. ACC-11E input data is written to MACRO IC addresses ($7XXXX) on the Ring Controller, and Ring Controller output data is written to MACRO Station IC addresses ($C0XX) on the MACRO Station.
3. User Access: Ring Controller ($7XXXX) addresses are accessed thru M-Variables and used in PLC and motion programs.

Note

The Ring Controller is sometimes referred to as the Master, but it is the synchronizing Master. There can be more than one Master on a MACRO ring, but there must be one, and only one, Ring Controller.

Note

Refer to the 16-Axis MACRO CPU manuals (SRM, USER, and HRM) for more information on MACRO.

Each MACRO IC consists of 16 nodes: 2 auxiliary, 8 servo, and 6 I/O nodes.

- Auxiliary nodes are for Ring Controller/Control registers and internal firmware use.
- Servo nodes are used for motor control, carrying feedback, commands, and flag information.
- I/O nodes are by default unoccupied and are user configurable for transferring various data.

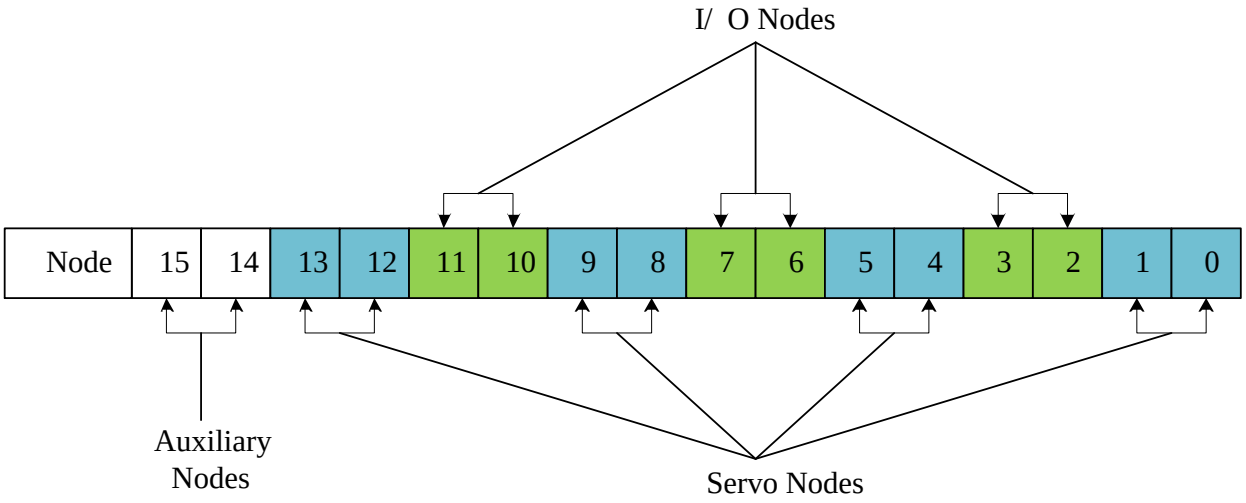

Each I/O node consists of 4 registers; one 24-bit and three 16-bit registers for a total of 72 bits of data:

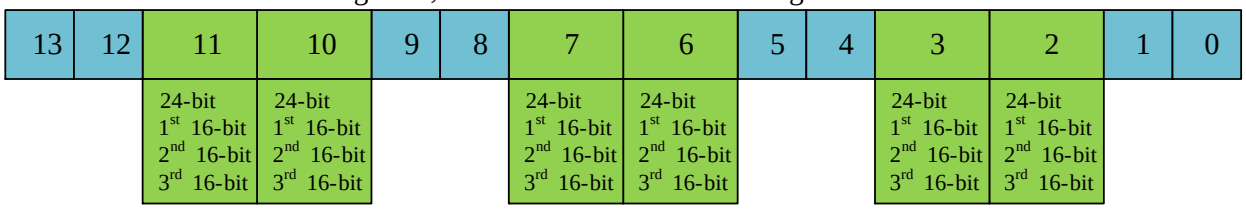

A given MACRO Station can be populated with either a MACRO8 or MACRO16 CPU:

- MACRO8 supports 1 MACRO IC (IC#0).
- MACRO16 supports 2 MACRO ICs (IC#0 and IC#1).

The I/O node addresses ($C0XX) on the MACRO Station ICs are:

	MACRO Station IC #0 Node Registers					
Node	**2**	**3**	**6**	**7**	**10**	**11**
24-bit	X:$C0A0	X:$C0A4	X:$C0A8	X:$C0AC	X:$C0B0	X:$C0B4
16-bit	X:$C0A1	X:$C0A5	X:$C0A9	X:$C0AD	X:$C0B1	X:$C0B5
16-bit	X:$C0A2	X:$C0A6	X:$C0AA	X:$C0AE	X:$C0B2	X:$C0B6
16-bit	X:$C0A3	X:$C0A7	X:$C0AB	X:$C0AF	X:$C0B3	X:$C0B7

	MACRO Station IC #1 Node Registers					
Node	**2**	**3**	**6**	**7**	**10**	**11**
24-bit	X:$C0E0	X:$C0E4	X:$C0E8	X:$C0EC	X:$C0F0	X:$C0F4
16-bit	X:$C0E1	X:$C0E5	X:$C0E9	X:$C0ED	X:$C0F1	X:$C0F5
16-bit	X:$C0E2	X:$C0E6	X:$C0EA	X:$C0EE	X:$C0F2	X:$C0F6
16-bit	X:$C0E3	X:$C0E7	X:$C0EB	X:$C0EF	X:$C0F3	X:$C0F7

A given Ring Controller (Turbo PMAC2 Ultralite or UMAC with two ACC-5Es) can be populated with up to 4 MACRO ICs (IC#0, IC#1, IC#2, and IC#3) which can be queried with global variable I4902:

If I4902=	Populated MACRO IC #s
$0	None
$1	0
$3	0, 1
$7	0, 1, 2
$F	0, 1, 2, 3

The I/O node addresses ($7XXXX) for each of the Ring Controller MACRO ICs are:

	Ring Controller MACRO IC #0 Node Registers					
Station I/O Node#	**2**	**3**	**6**	**7**	**10**	**11**
Ring Controller I/O Node#	**2**	**3**	**6**	**7**	**10**	**11**
24-bit	X:$78420	X:$78424	X:$78428	X:$7842C	X:$78430	X:$78434
16-bit	X:$78421	X:$78425	X:$78429	X:$7842D	X:$78431	X:$78435
16-bit	X:$78422	X:$78426	X:$7842A	X:$7842E	X:$78432	X:$78436
16-bit	X:$78423	X:$78427	X:$7842B	X:$7842F	X:$78433	X:$78437

	Ring Controller MACRO IC #1 Node Registers					
Station I/O Node#	**2**	**3**	**6**	**7**	**10**	**11**
Ring Controller I/O Node#	**18**	**19**	**22**	**23**	**26**	**27**
24-bit	X:$79420	X:$79424	X:$79428	X:$7942C	X:$79430	X:$79434
16-bit	X:$79421	X:$79425	X:$79429	X:$7942D	X:$79431	X:$79435
16-bit	X:$79422	X:$79426	X:$7942A	X:$7942E	X:$79432	X:$79436
16-bit	X:$79423	X:$79427	X:$7942B	X:$7942F	X:$79433	X:$79437

	Ring Controller MACRO IC #2 Node Registers					
Station I/O Node#	**2**	**3**	**6**	**7**	**10**	**11**
Ring Controller I/O Node#	**34**	**35**	**38**	**39**	**42**	**43**
24-bit	X:$7A420	X:$7A424	X:$7A428	X:$7A42C	X:$7A430	X:$7A434
16-bit	X:$7A421	X:$7A425	X:$7A429	X:$7A42D	X:$7A431	X:$7A435
16-bit	X:$7A422	X:$7A426	X:$7A42A	X:$7A42E	X:$7A432	X:$7A436
16-bit	X:$7A423	X:$7A427	X:$7A42B	X:$7A42F	X:$7A433	X:$7A437

	Ring Controller MACRO IC #3 Node Registers					
Station I/O Node#	**2**	**3**	**6**	**7**	**10**	**11**
Ring Controller I/O Node#	**50**	**51**	**54**	**55**	**58**	**59**
24-bit	X:$7B420	X:$7B424	X:$7B428	X:$7B42C	X:$7B430	X:$7B434
16-bit	X:$7B421	X:$7B425	X:$7B429	X:$7B42D	X:$7B431	X:$7B435
16-bit	X:$7B422	X:$7B426	X:$7B42A	X:$7B42E	X:$7B432	X:$7B436
16-bit	X:$7B423	X:$7B427	X:$7B42B	X:$7B42F	X:$7B433	X:$7B437

Setting Up The Control Word

The Control Word must be set equal to 7 once on power-up, usually in an initialization PLC. The advised method to set up the control word with MACRO is using the direct read/write parameters:

- **MS{anynode}, MI198** Direct Read/Write Format and Address
- **MS{anynode}, MI199** Direct Read/Write variable

Note

The direct read/write parameters require MACRO16 CPU firmware 1.16 or later.

The **MS{anynode}, MI198** setting is base address (and byte location) dependent:

Chip Select	Base Address	Byte Location	Control Word Location	MI198 Setting
CS10	Y:$8800	Low	Y:$8807,0,8	MI198=$408807
		Middle	Y:$8807,8,8	MI198=$488807
		High	Y:$8807,16,8	MI198=$508807
CS12	Y:$8840	Low	Y:$8847,0,8	MI198=$408847
		Middle	Y:$8847,8,8	MI198=$488847
		High	Y:$8847,16,8	MI198=$508847
CS14	Y:$8880	Low	Y:$8887,0,8	MI198=$408887
		Middle	Y:$8887,8,8	MI198=$488887
		High	Y:$8887,16,8	MI198=$508887
CS16	Y:$88C0	Low	Y:$88C7,0,8	MI198=$4088C7
		Middle	Y:$88C7,8,8	MI198=$4888C7
		High	Y:$88C7,16,8	MI198=$5088C7

Note

CS16 Cannot be used with legacy MACRO16 CPU's (rev 100 –104)

Note

MI198 and MI199 can be written to directly from the Pewin32Pro2 terminal window. However, their values are not saved and should be executed in a startup PLC.

Example: Writing control words for two ACC-11E cards set to base addresses $8800,0,8 and $8800,8,8

```
Open PLC 1 Clear
I5111=1000*8388608/I10 while(I5111>0) endw   ; 1-sec delay

CMD"MS0,MI198=$408807"        ; Set control word for first ACC-11E at $8800 low byte addresses
CMD"MS0,MI199=$07"            ; Write $07 into Y:$8807,0,8 (control word)
I5111=50*8388608/I10 while(I5111>0) endw     ; 50-msec delay

CMD"MS0,MI198=$488807"        ; Set control word for second ACC-11E at $8800 mid byte addresses
CMD"MS0,MI199=$07"            ; Write $07 into Y:$8807,8,8 (control word)
I5111=50*8388608/I10 while(I5111>0) endw     ; 50-msec delay

Disable PLC 1
Close
```

Note

See appendix for further control word details.

Transferring Data Points over I/O Nodes

This section illustrates how I/O data is transferred from ACC-11E ($88XX) registers, thru I/O nodes ($C0XX), and finally to the ring controller ($7XXXX) for user access using M-Variable pointers.

Note

It is assumed that communication over the MACRO ring has already been established, and that the user is familiar with node activation on both the Ring Controller and MACRO Station. Thus, any node(s) used in subsequent example(s) have to have been enabled previously.

Generally, there are three basic transfer methods. The decision of which to use might depend on what types of I/O cards, and how many, are being used. The MI71 method is the typical choice for handling up to six ACC-11E cards in one rack.

MACRO Station IC#0

Transfer MI-Variable	Used For:	Transfer Type
MI71	Most Applications	24-bit
MI69, MI70	Special cases, if: • 24-bit registers are already in use • More than six cards are needed	16-Bit
MI171, MI172, MI173	Special cases, if: • It is desired to fit 3 cards into 2 I/O nodes • More than six cards needed	24-Bit / 16-Bit

MACRO Station IC#1

Transfer MI-Variable	Used For:	Transfer Type
MI**10**71	Most Applications	24-bit
MI**10**69, MI**10**70	Special cases, if: • 24-bit registers are already in use • More than six cards are needed	16-Bit
MI**1**171, MI**1**172, MI**1**173	Special cases, if: • It is desired to fit 3 cards into 2 I/O nodes • More than six cards needed	24-Bit / 16-Bit

Note

The MACRO16 CPU is populated with 2 MACRO ICs (IC #0 and #1), each of which has its own I/O transfer variables.

Preparing for I/O Data Transfer on the MACRO16 Station

The following parameters should be configured properly for the I/O node transfer to work properly:

- **MS{anynode}, MI992** — Max. Phase frequency control
  Typically, set to equal to ring controller's I6800
- **MS{anynode}, MI997** — Phase clock frequency control
  Typically, set to equal to ring controller's I6801
- **MS{anynode}, MI995** — MACRO Ring configuration/status
  Typically, set to = $4080
- **MS{anynode}, MI996** — MACRO IC#0 node activate control
- **MS{anynode}, MI975** — MACRO IC#0 I/O Node enable
  MI975 should match enabled I/O nodes in MI996
- **MS{anynode}, MI8** — MACRO Ring check Period
  Typically set to = 8 (with default clock settings)
- **MS{anynode}, MI9** — MACRO Ring error shutdown count
  Typically set to = 4 (with default clock settings)
- **MS{anynode}, MI10** — MACRO Sync packet shutdown count
  Typically set to = 4 (with default clock settings)
- **MS{anynode},MI19** — I/O node data transfer rate
  = 0, transfer disabled.
  > 0, transfer period in Phase clock cycles (typically set =4).
- **MS{anynode}, MI1996** — MACRO IC#1 node activate control (if IC#1 is used)
- **MS{anynode}, MI1975** — MACRO IC#1 I/O Node enable (if IC#1 is used)
  MI1975 should match enabled I/O nodes in MI1996

Note

The following I/O data transfer method examples assume that MACRO communication, I/O nodes enabling, and other MACRO ring parameters have been configured properly on both the ring Controller and MACRO Station.

MS{anynode},MI71: 24-Bit Transfer

This method is typically used when six or less ACC-11E cards are present in the rack.

MS{anynode},MI71 processes 24-bit register transfers. It is a 48-bit variable represented as 12 hexadecimal digits which are set up as follows (digit #1 is leftmost when constructing the word):

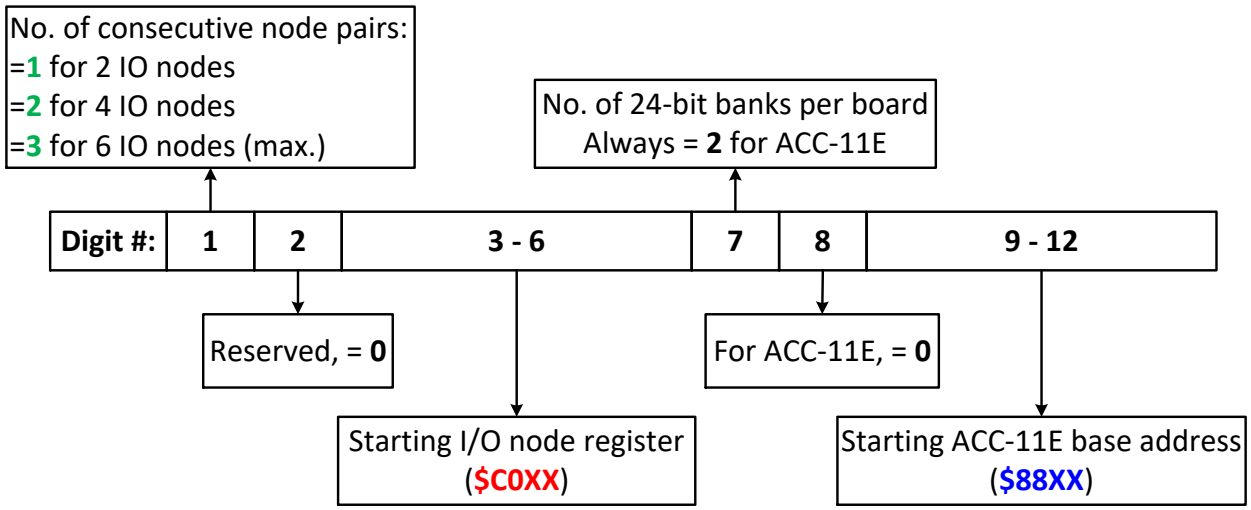

Example 1: Transferring I/O data of one ACC-11E card (total of 48 bits) at base address **$8800** (using low bytes) over MACRO using two consecutive 24-bit registers of I/O nodes 2 and 3 (**$C0A0**, and $C0A4 respectively) yields:

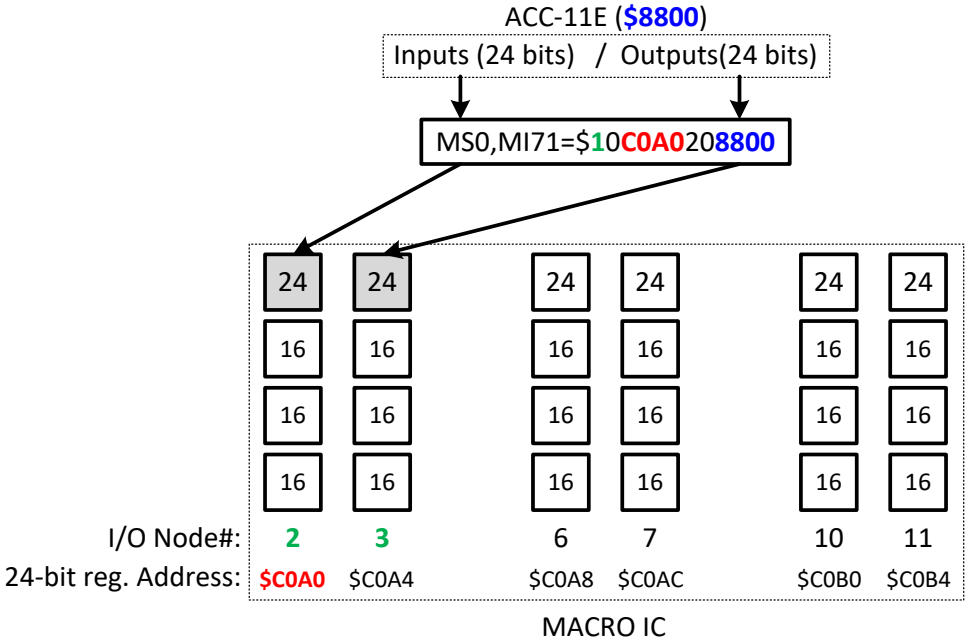

Example 2: Transferring I/O data of two ACC-11E cards (total of 96 bits) at consecutive **$8800** addresses (using low and middle bytes) over MACRO using four consecutive 24-bit registers of I/O nodes 2, 3, 6, and 7 (**$C0A0**, $C0A4, $C0A8, and $C0AC respectively) yields:

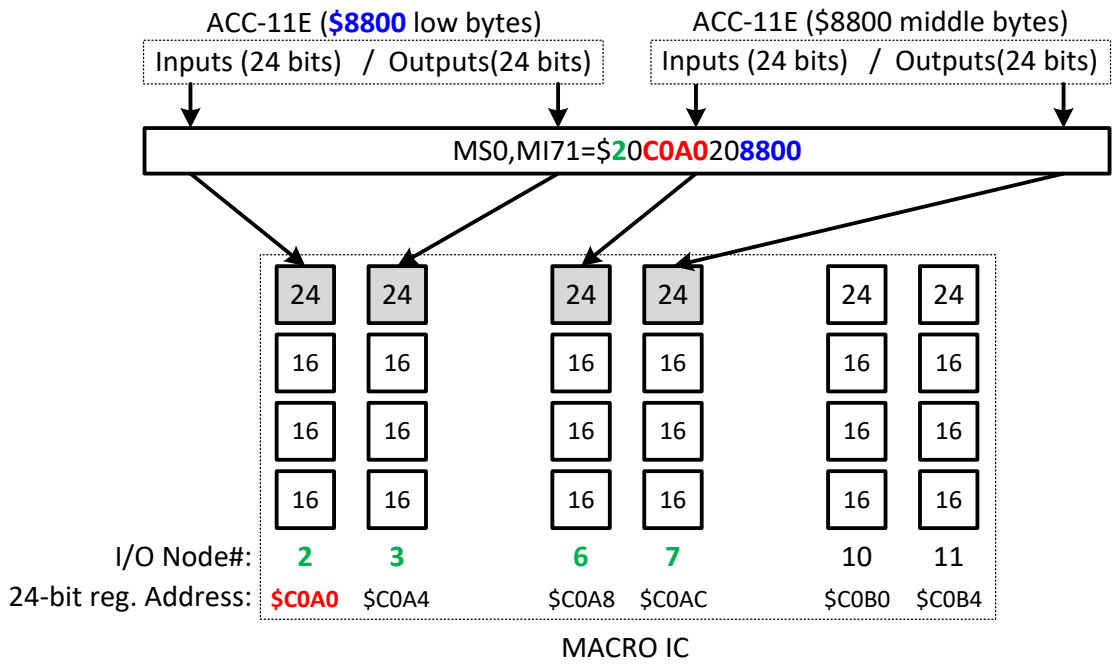

Example 3: Transferring I/O data of three ACC-11E cards (total of 144 bits) at consecutive **$8800** addresses (using low, middle, and high bytes) over MACRO using six consecutive 24-bit registers of I/O nodes 2, 3, 6, 7, 10, and 11 (**$C0A0**, $C0A4, $C0A8, $C0AC, $C0B0, and $C0B4 respectively) yields:

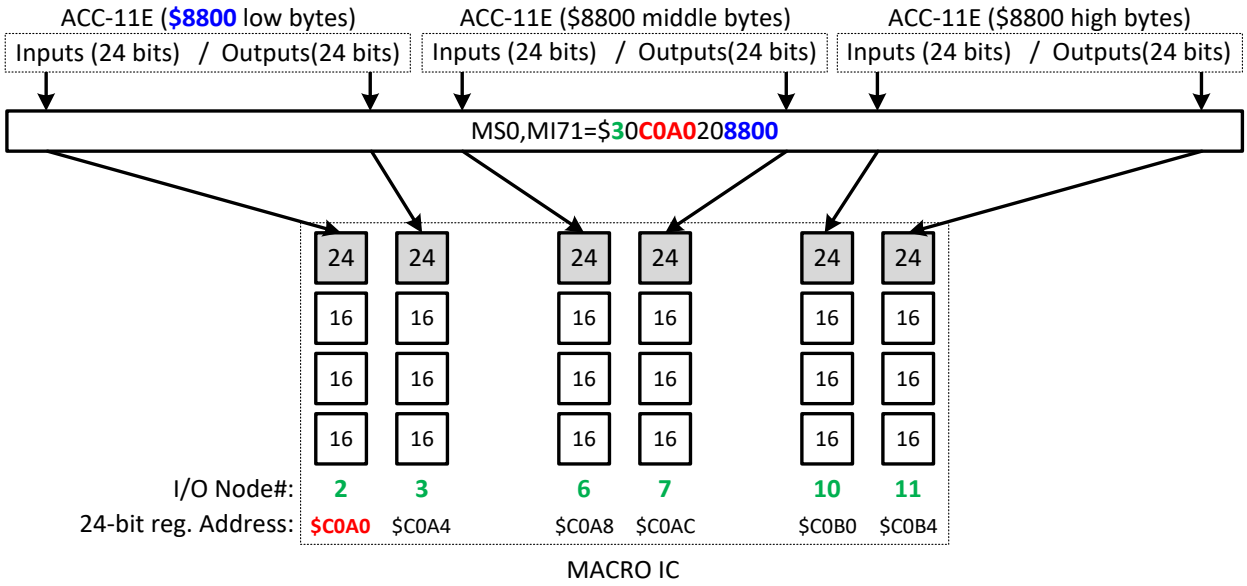

Example 4: Transferring I/O data of the maximum of six ACC-11E cards (total of 288 bits) at consecutive **$8800** addresses (using low, middle, and high bytes) and consecutive **$8840** addresses (using low, middle, and high bytes) over MACRO using six consecutive 24-bit registers of IC#0 I/O nodes 2, 3, 6, 7, 10, and 11 (**$C0A0**, $C0A4, $C0A8, $C0AC, $C0B0, and $C0B4 respectively) and six consecutive IC#1 I/O nodes 2, 3, 6, 7, 10, and 11 (**$C0E0**, $C0E4, $C0E8, $C0EC, $C0F0, and $C0F4 respectively) yields:

MS0,MI71=$30**C0A0**20**8800**
MS0,MI1071=$30 **C0E0**20**8840**

Note

- Transferring multiple ACC-11E cards using **MS{anynode}, MI71** requires them to be at the same base address, starting with the first card set for low byte addressing, the second card set for middle byte addressing, and then a third card (if present) set for high byte addressing.
- The 24-bit node registers used with **MS{anynode}, MI71** must be at consecutive addresses.

Note

A save **MSSAV{anynode}**, followed by a reset **MS$$${anynode)** at the MACRO station is necessary for MI71 transfers to take effect.

Once a transfer is enabled, the I/O data is copied automatically by the firmware into the ring controllers' node registers ($7XXXX) where it is accessible to the user. However, the MACRO protocol limits handling of these registers to full words (16- or 24-bit).
The inputs can be read directly in full word assignments. The outputs can be written to directly in full word assignments, but cannot report their current state.

Note

Reading the state of inputs can be done directly from I/O node registers ($7XXXX) using full word assignments.

Note

Writing to outputs can be done directly to I/O node registers ($7XXXX) using full word assignments; however, reading the state of outputs is not possible.

Creating input and output image (mirrored) words in a PLC program allows bitwise assignments, full user access, and state reporting. The following diagram illustrates the basic concept of mirroring:

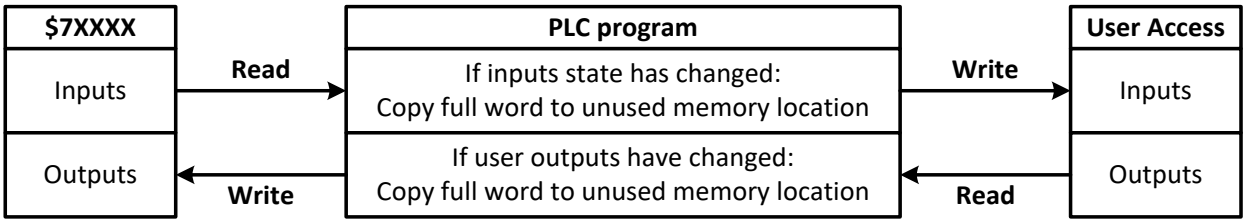

Example: For "example 1" above, using MI71 24-bit transfer to process one ACC-11E over MACRO using I/O nodes 2 and 3, the following assignments and PLC program demonstrate the mirroring implementation:

```
#define Inputs         M4000   ; M-Variable pointer to hold 24-bit inputs
#define Outputs        M4001   ; M-Variable pointer to hold 24-bit outputs

Inputs->X:$78420,0,24,U        ; I/O Node 2 24-bit register (inputs)
Outputs->X:$78424,0,24,U       ; I/O Node 3 24-bit register (outputs)

#define InMirror       M4002   ; M-Variable pointer to hold inputs mirror word
#define OutMirror      M4003   ; M-Variable pointer to hold outputs mirror word
#define OutState       M4004   ; M-Variable pointer to latch current outputs state

InMirror->X:$10F0,0,24,U       ; Reserve unused memory register (to hold inputs)
OutMirror->Y:$10F0,0,24,U      ; Reserve unused memory register (to hold outputs)
OutState->*                    ; Self referenced
OutState=0                     ; Initialize =0 on download

Open plc 1 clear
If (InMirror!=Inputs)          ; Inputs state changed?
 InMirror=Inputs               ; Update inputs mirror word to match current state
EndIf                          ;

If (OutState!=OutMirror)       ; Outputs state changed?
 OutState=OutMirror            ; Update state of outputs mirror word
 Outputs=OutMirror             ; Update outputs
EndIf
Close
```

Note

With the ACC-11E (or any other 24In/24Out card), the inputs are copied through the first of the two 24-bit registers, and the outputs are copied through the second of the two 24-bit registers.

Note

Turbo PMAC unusued (open) memory registers can be either X or Y located at **X/Y:$10F0 - $10FF** (total of 32).
Make sure that the registers chosen for mirroring are not used in another process.

The I/O data is now available in the pre-defined open memory registers. Bitwise maping can be implemented for direct and convenient user access:

```
// Inputs
#define Input1 M3300       Input1->X:$0010F0,0
#define Input2 M3301        Input2->X:$0010F0,1
#define Input3 M3302        Input3->X:$0010F0,2
#define Input4 M3303        Input4->X:$0010F0,3
#define Input5 M3304        Input5->X:$0010F0,4
#define Input6 M3305        Input6->X:$0010F0,5
#define Input7 M3306        Input7->X:$0010F0,6
#define Input8 M3307        Input8->X:$0010F0,7
#define Input9 M3308        Input9->X:$0010F0,8
#define Input10 M3309       Input10->X:$0010F0,9
#define Input11 M3310       Input11->X:$0010F0,10
#define Input12 M3311       Input12->X:$0010F0,11
#define Input13 M3312       Input13->X:$0010F0,12
#define Input14 M3313       Input14->X:$0010F0,13
#define Input15 M3314       Input15->X:$0010F0,14
#define Input16 M3315       Input16->X:$0010F0,15
#define Input17 M3316       Input17->X:$0010F0,16
#define Input18 M3317       Input18->X:$0010F0,17
#define Input19 M3318       Input19->X:$0010F0,18
#define Input20 M3319       Input20->X:$0010F0,19
#define Input21 M3320       Input21->X:$0010F0,20
#define Input22 M3321       Input22->X:$0010F0,21
#define Input23 M3322       Input23->X:$0010F0,22
#define Input24 M3323       Input24->X:$0010F0,23
// Outputs
#define Output1 M3325       Output1->Y:$0010F0,0
#define Output2 M3326       Output2->Y:$0010F0,1
#define Output3 M3327       Output3->Y:$0010F0,2
#define Output4 M3328       Output4->Y:$0010F0,3
#define Output5 M3329       Output5->Y:$0010F0,4
#define Output6 M3330       Output6->Y:$0010F0,5
#define Output7 M3331       Output7->Y:$0010F0,6
#define Output8 M3332       Output8->Y:$0010F0,7
#define Output9 M3333       Output9->Y:$0010F0,8
#define Output10 M3334      Output10->Y:$0010F0,9
#define Output11 M3335      Output11->Y:$0010F0,10
#define Output12 M3336      Output12->Y:$0010F0,11
#define Output13 M3337      Output13->Y:$0010F0,12
#define Output14 M3338      Output14->Y:$0010F0,13
#define Output15 M3339      Output15->Y:$0010F0,14
#define Output16 M3340      Output16->Y:$0010F0,15
#define Output17 M3341      Output17->Y:$0010F0,16
#define Output18 M3342      Output18->Y:$0010F0,17
#define Output19 M3343      Output19->Y:$0010F0,18
#define Output20 M3344      Output20->Y:$0010F0,19
#define Output21 M3345      Output21->Y:$0010F0,20
#define Output22 M3346      Output22->Y:$0010F0,21
#define Output23 M3347      Output23->Y:$0010F0,22
#define Output24 M3348      Output24->Y:$0010F0,23
```

MS{anynode},MI69 and MI70: 16-Bit Transfer

This method is generally only used in special cases in which the 24-bit transfer method cannot be used because either the 24-bit registers are already being used or because more than six ACC-11E cards are needed.

MS{anynode},MI69/70 processes 16-bit register transfers. It is a 48-bit variable represented as 12 hexadecimal digits which are set up as follows (digit #1 is leftmost when constructing the word):

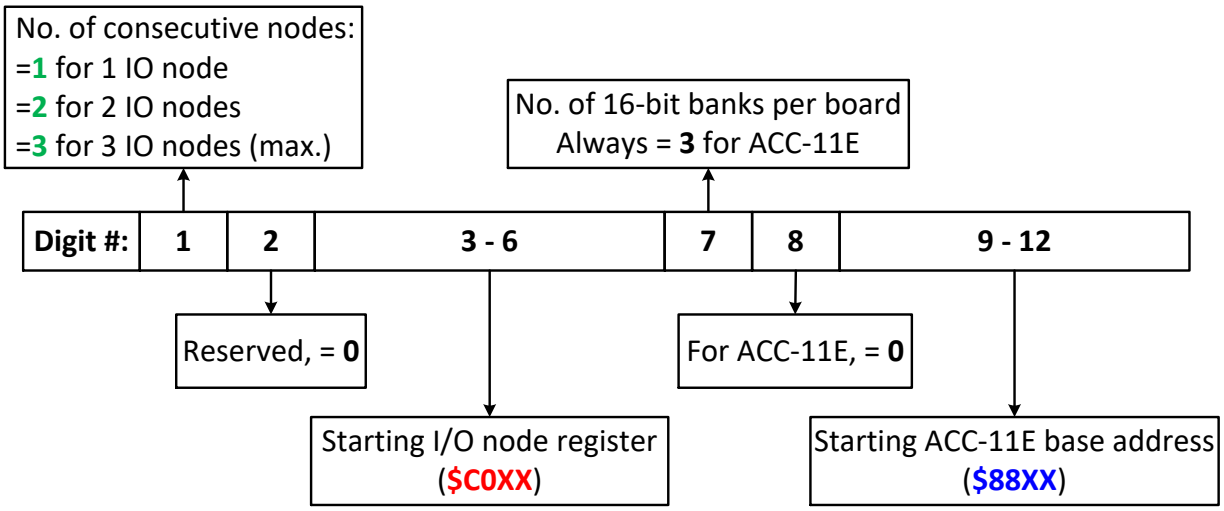

Example: Transferring I/O data of one ACC-11E card (total of 48 bits) at base address **$8800** over MACRO using three consecutive 16-bit registers of I/O node 2 (**$C0A1**, $C0A2, and $C0A3, respectively) yields:

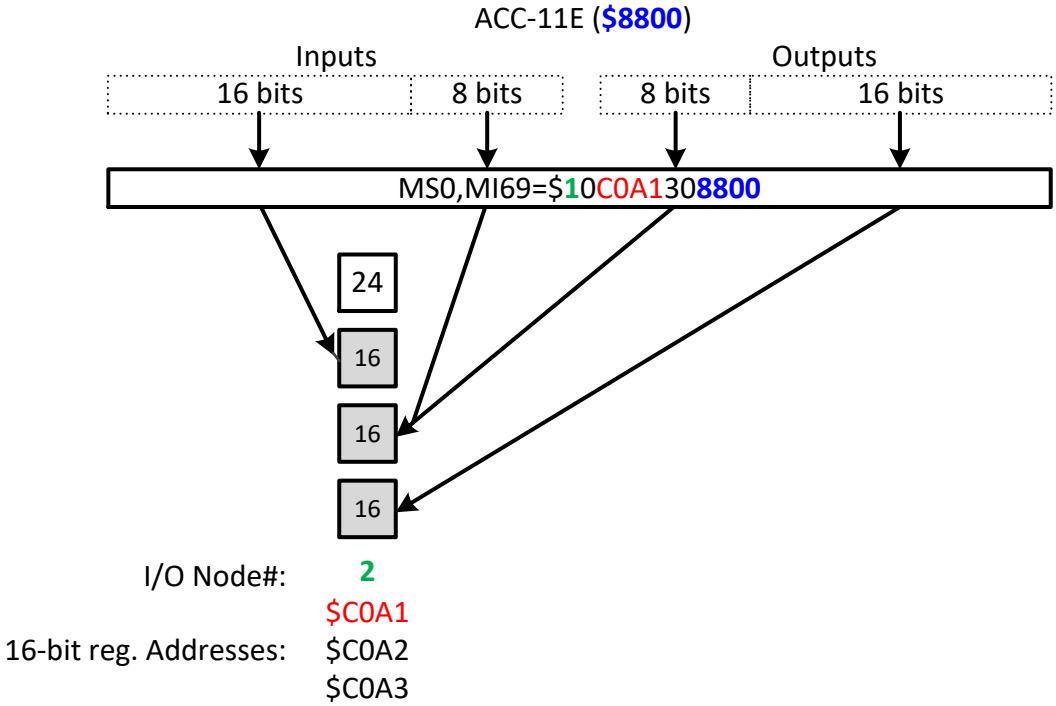

Note

- Transferring multiple ACC-11E cards using **MS{anynode}, MI69** and **MI70** requires them to be at the same base address, starting with the first card set for low byte addressing, the second card set for middle byte addressing, and then a third card (if present) set for high byte addressing.
- The 16-bit node registers used with **MS{anynode}, MI69** and **MI70** must be at consecutive addresses.

Note

A save **MSSAV{anynode}**, followed by a reset **MS$$${anynode)** at the MACRO station is necessary for MI69 and MI70 transfers to take effect.

The I/O data is now copied automatically by the firmware into the ring controllers' node registers ($7XXXX) where it is accessible by the user. However, the MACRO protocol limits handling of these registers to full words (16- or 24-bit).
The inputs can be read directly in full word assignments. The outputs can be written to directly in full word assignments, but cannot report their current state.

Note

Reading the state of inputs can be done directly from I/O node registers ($7XXXX) using full word assignments.

Note

Writing to outputs can be done directly to I/O node registers ($7XXXX) using full word assignments; however, reading the state of outputs is not possible.

Creating input and output image (mirrored) words in a PLC program allows bitwise assignments, full user access, and state reporting. The following diagram illustrates the basic concept of mirroring:

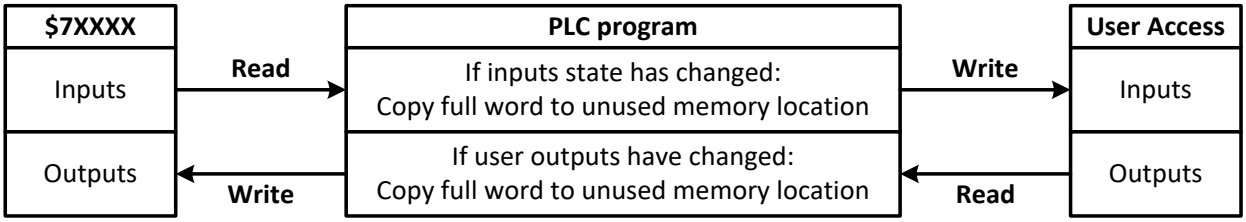

Example: For the above example, using MI69 16-bit transfer to process one ACC-11E over MACRO using I/O node 2, the following assignments and PLC program demonstrate the mirroring implementation.

In 16-bit transfers, the middle 16-bit register is split into half inputs and half outputs. Because of this, outputs must be masked when reading inputs, and inputs must be masked when writing outputs.

```
#define 16In           M4015   ; M-Variable pointer to hold 16-bit inputs
#define 8In8Out        M4016   ; M-Variable pointer to hold 8-bit inputs and 8-bit outputs
#define 16Out          M4017   ; M-Variable pointer to hold 16-bit outputs

16In->X:$78421,8,16            ; I/O Node 2 1st 16-bit register (16 inputs)
8In8Out->X:$78422,8,16         ; I/O Node 2 2nd 16-bit register (8 inputs and 8 outputs)
16Out->X:$78423,8,16           ; I/O Node 2 3rd 16-bit register (16 outputs)

#define InMirror16     M4115   ; M-Variable pointer to hold 16-bit input mirror word
#define InMirror8      M4116   ; M-Variable pointer to hold 8 input mirror word
#define OutMirror8     M4117   ; M-Variable pointer to hold 8 output mirror word
#define OutMirror16    M4118   ; M-Variable pointer to hold 16-bit output mirror word
#define OutState8      M4119   ; M-Variable pointer to latch current state of 8 output bits
#define OutState16     M4120   ; M-Variable pointer to latch current state of 16 output bits

InMirror16->X:$10F8,8,16       ; Reserve unused memory register (to hold 16 inputs)
InMirror8->Y:$10F8,8,8         ; Reserve unused memory register (to hold 8 inputs)
OutMirror8->X:$10F9,8,16       ; Reserve unused memory register (to hold 8 outputs)
OutMirror16->Y:$10F9,8,16      ; Reserve unused memory register (to hold 16 outputs)
OutState8->*                   ; Self referenced
OutState16->*                  ; Self referenced
OutState8=0                    ; Initialize =0 on download
OutState16=0                   ; Initialize =0 on download

Open plc 1 clear
If (InMirror16!=16In)          ; Inputs state changed?
Or (InMirror8!=8In8Out&$00FF)
 InMirror16=16In               ; Update inputs mirror word to match current state
 InMirror8=8In8Out&$00FF       ; Update inputs mirror byte to match current state
EndIf                          ;

If (OutState8!=OutMirror8&$FF00) ; Outputs state changed?
Or (OutState16!=OutMirror16)
 OutState8=OutMirror8&$FF00    ; Update state of output mirrors
 OutState16=OutMirror16
 8In8Out=OutMirror8&$FF00      ; Update outputs
 16Out=OutMirror16
EndIf
Close
```

Note

With the ACC-11E (or any other 24In/24Out card), the inputs are copied through the entire first 16-bit register and the first byte of the second 16-bit register. The outputs are copied through the second byte of the second 16-bit register and the entire third 16-bit register.

Note

Turbo PMAC unusued (open) memory registers can be either X or Y located at **X/Y:$10F0 - $10FF** (total of 32).
Make sure that the registers chosen for mirroring are not used in another process.

The I/O data is now available in the pre-defined open memory registers. Bitwise mapping can be implemented for direct and convenient user access:

```
//Inputs
//Inputs
#define Input1 M3600          Input1->X:$0010F8,8    ; 1st 16-bit register
#define Input2 M3601          Input2->X:$0010F8,9
#define Input3 M3602          Input3->X:$0010F8,10
#define Input4 M3603          Input4->X:$0010F8,11
#define Input5 M3604          Input5->X:$0010F8,12
#define Input6 M3605          Input6->X:$0010F8,13
#define Input7 M3606          Input7->X:$0010F8,14
#define Input8 M3607          Input8->X:$0010F8,15
#define Input9 M3608          Input9->X:$0010F8,16
#define Input10 M3609         Input10->X:$0010F8,17
#define Input11 M3610         Input11->X:$0010F8,18
#define Input12 M3611         Input12->X:$0010F8,19
#define Input13 M3612         Input13->X:$0010F8,20
#define Input14 M3613         Input14->X:$0010F8,21
#define Input15 M3614         Input15->X:$0010F8,22
#define Input16 M3615         Input16->X:$0010F8,23

#define Input17 M3616         Input17->Y:$0010F8,8   ; 2nd 16-bit register
#define Input18 M3617         Input18->Y:$0010F8,9
#define Input19 M3618         Input19->Y:$0010F8,10
#define Input20 M3619         Input20->Y:$0010F8,11
#define Input21 M3620         Input21->Y:$0010F8,12
#define Input22 M3621         Input22->Y:$0010F8,13
#define Input23 M3622         Input23->Y:$0010F8,14
#define Input24 M3623         Input24->Y:$0010F8,15

//Outputs
#define Output1 M3625         Output1->Y:$0010F8,16
#define Output2 M3626         Output2->Y:$0010F8,17
#define Output3 M3627         Output3->Y:$0010F8,18
#define Output4 M3628         Output4->Y:$0010F8,19
#define Output5 M3629         Output5->Y:$0010F8,20
#define Output6 M3630         Output6->Y:$0010F8,21
#define Output7 M3631         Output7->Y:$0010F8,22
#define Output8 M3632         Output8->Y:$0010F8,23

#define Output9 M3633         Output9->X:$0010F9,8   ; 3rd 16-bit register
#define Output10 M3634        Output10->X:$0010F9,9
#define Output11 M3635        Output11->X:$0010F9,10
#define Output12 M3636        Output12->X:$0010F9,11
#define Output13 M3637        Output13->X:$0010F9,12
#define Output14 M3638        Output14->X:$0010F9,13
#define Output15 M3639        Output15->X:$0010F9,14
#define Output16 M3640        Output16->X:$0010F9,15
#define Output17 M3641        Output17->X:$0010F9,16
#define Output18 M3642        Output18->X:$0010F9,17
#define Output19 M3643        Output19->X:$0010F9,18
#define Output20 M3644        Output20->X:$0010F9,19
#define Output21 M3645        Output21->X:$0010F9,20
#define Output22 M3646        Output22->X:$0010F9,21
#define Output23 M3647        Output23->X:$0010F9,22
#define Output24 M3648        Output24->X:$0010F9,23
```

MS{anynode}, MI171, MI172, and MI173: 24-Bit/16-Bit Transfer

This method of transfer is not commonly used with an ACC-11E and is therefore covered more briefly. With this method, three ACC-11E cards make full use of only two I/O nodes. Note that if less than three cards are used, nodes will be otherwise unusable.

MS{anynode},MI171/172/173 processes 24-bit and 16-bit register transfers. It is a 48-bit variable represented as 12 hexadecimal digits which are set up as follows (digit #1 is leftmost when constructing the word):

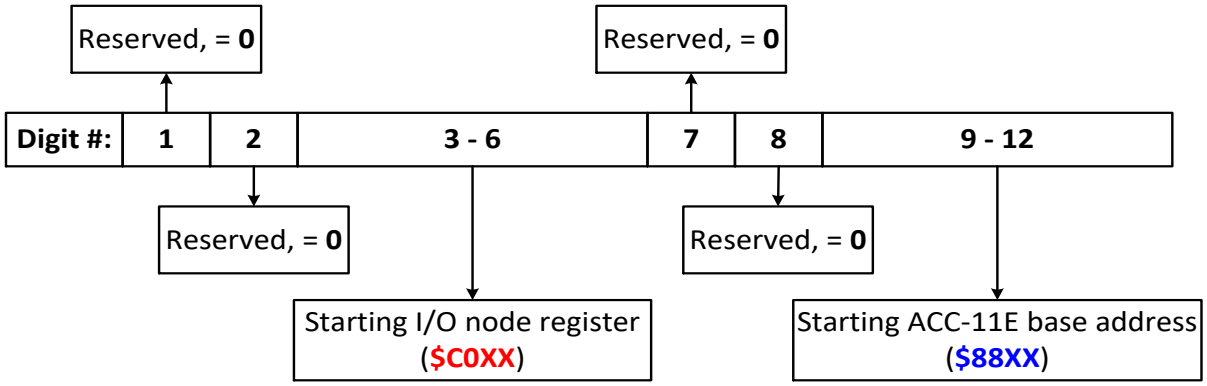

Example: Transferring I/O data of three ACC-11E cards (total of 144 bits) at consecutive **$88C0** addresses (using low, middle, and high bytes) over MACRO using six consecutive 16-bit registers followed by two consecutive 24-bit registers of I/O nodes ($C0B1, $C0B2, $C0B3, $C0B5, $C0B6, $C0B7, **$C0B0**, and $C0B4 respectively) yields:

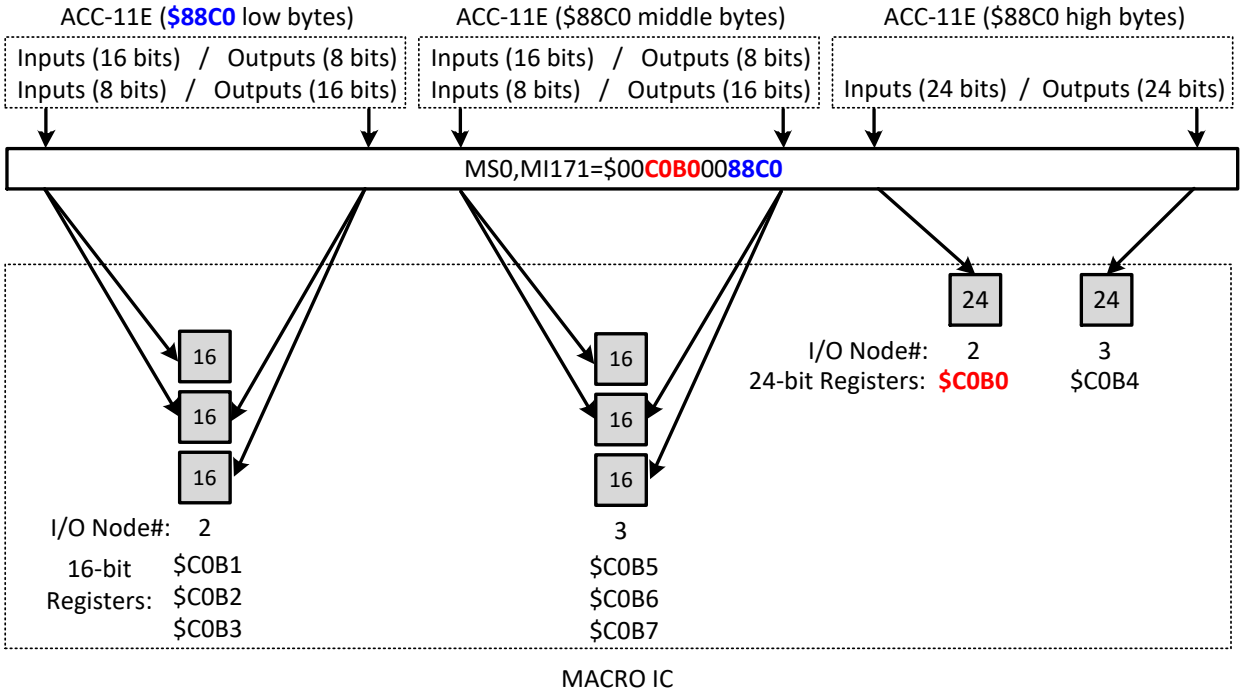

LAYOUTS & PINOUTS

Board Layout Diagrams

Terminal Block Option

Dimensions in Inches

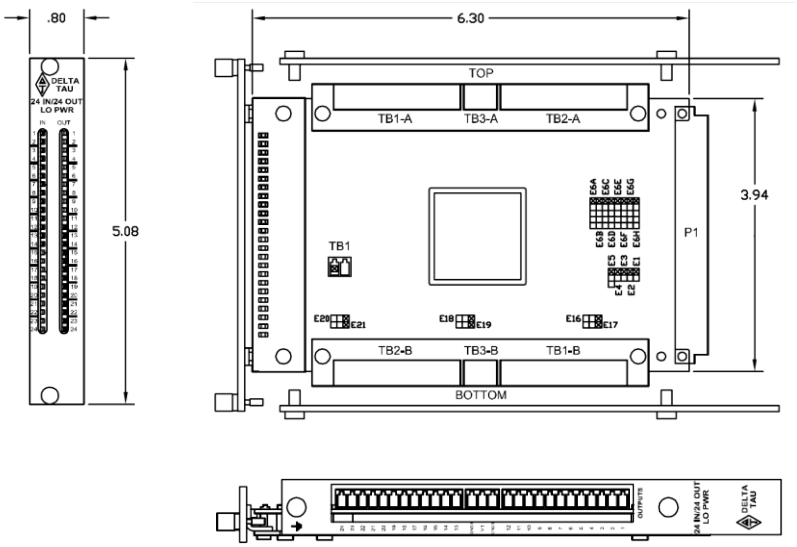

D-Sub Option

D-Sub connectors on board are female.

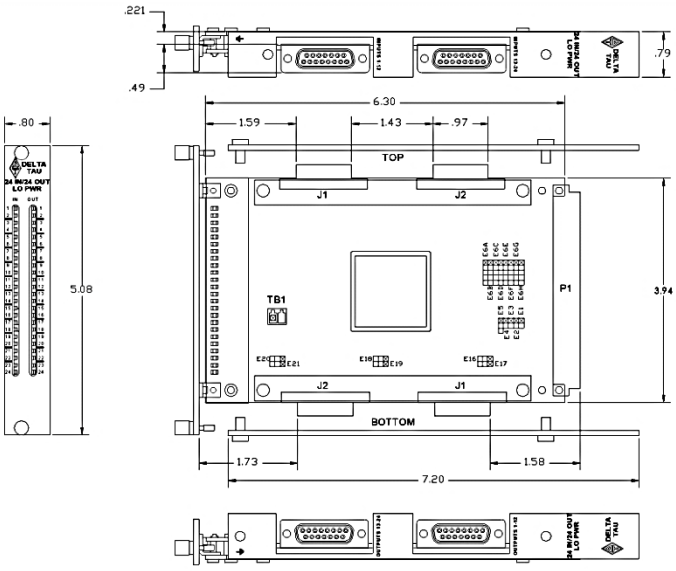

Wiring Considerations

The inputs have an activation range from 12 V to 24 V, and can be sinking or sourcing for each of three 8-bit groups, depending on the reference to the opto circuitry. The opto-isolator IC used is a PS2705-4NEC-ND quad photo-transistor output type. This IC allows the current to flow from return to flag (sourcing) or from flag to return (sinking).

The output drivers are organized in a set of three 8-bit groups. Each group (or byte) may be ordered either with current sourcing drivers (default) or with current sinking drivers. The default configuration of this accessory board uses UDN2981 current sourcing drivers for the three 8-bit output groups. With this configuration, the current drawn from each output line should be limited to 100 mA at voltage levels between 12 V and 24 V. Custom configurations are available for current sinking applications. In current sinking configurations, one ULN2803 driver is used per each 8-bit output group. Each open collector output line can sink up to 100 mA when pulled up to a voltage level between 12 V and 24 V (external pull-up resistors are not supplied).

Terminal Block Option

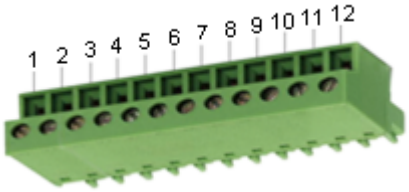

TB1 Top: Inputs 1 thru 12

Pin #	Function	Description
1	Input	Input #1
2	Input	Input #2
3	Input	Input #3
4	Input	Input #4
5	Input	Input #5
6	Input	Input #6
7	Input	Input #7
8	Input	Input #8
9	Input	Input #9
10	Input	Input #10
11	Input	Input #11
12	Input	Input #12

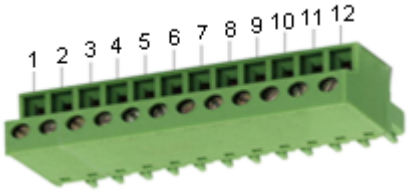

TB2 Top: Inputs 13 thru 24

Pin #	Function	Description
1	Input	Input #13
2	Input	Input #14
3	Input	Input #15
4	Input	Input #16
5	Input	Input #17
6	Input	Input #18
7	Input	Input #19
8	Input	Input #20
9	Input	Input #21
10	Input	Input #22
11	Input	Input #23
12	Input	Input #24

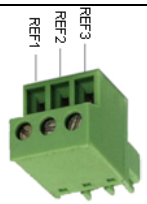

TB3 Top: Reference Voltages

Pin #	Function	Description
1	Reference	Inputs 1-8
2	Reference	Inputs 9-16
3	Reference	Inputs 17-24

Note

Can be wired for sinking or sourcing.

12-24V reference for sinking / 0V reference for sourcing.

Wiring Input Terminal Blocks

Sourcing Inputs

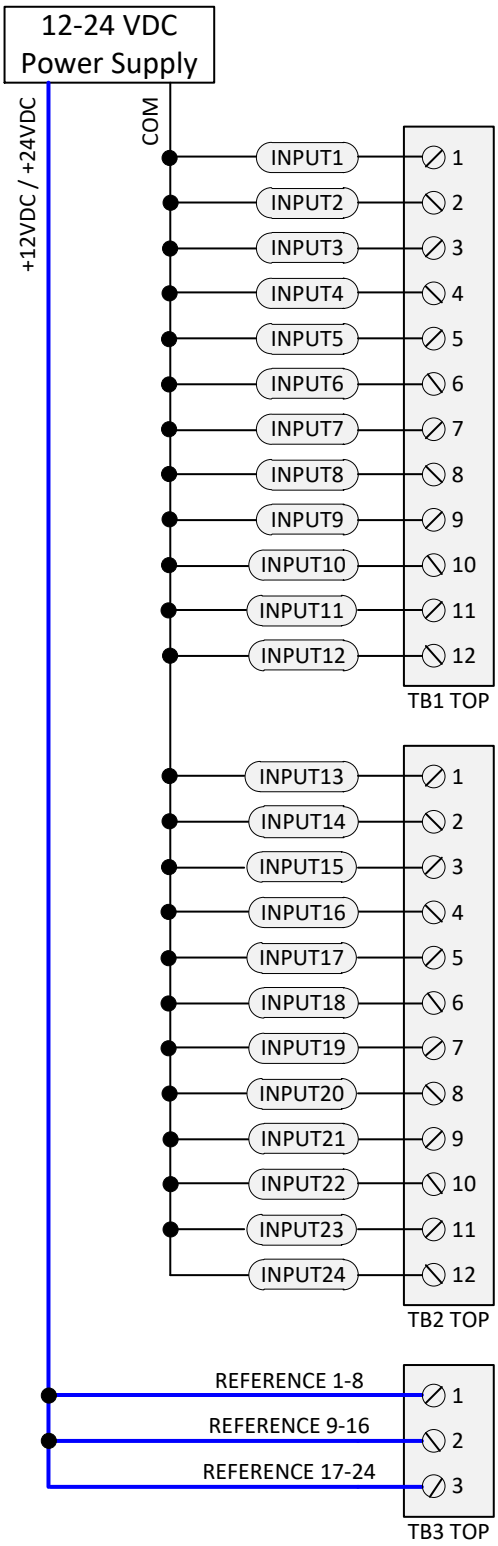

Sinking Inputs

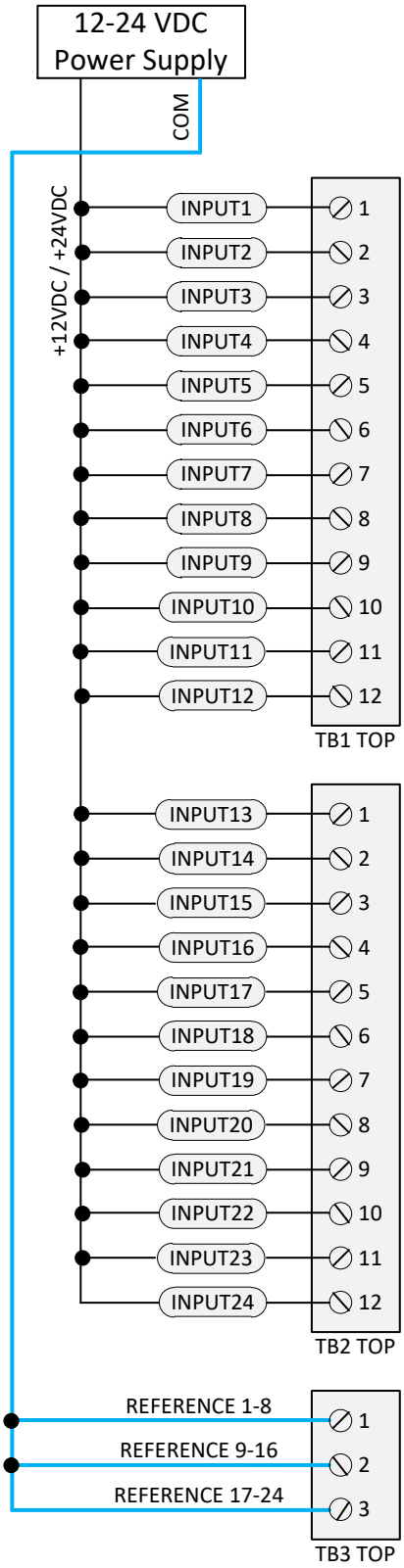

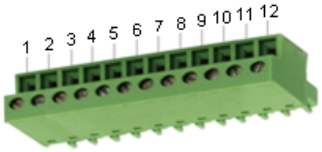

TB1 Bottom:
Outputs 1 thru 12

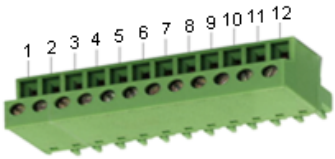

TB2 Bottom:
Outputs 13 thru 24

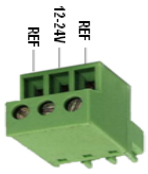

TB3 Bottom:
Reference Voltages

Pin #	Function	Description	Pin #	Function	Description	Pin #	Function	Description
1	Output	Output #1	1	Output	Output #13	1	Reference	0 V
2	Output	Output #2	2	Output	Output #14	2	Voltage	12-24 VDC
3	Output	Output #3	3	Output	Output #15	3	Reference	0 V
4	Output	Output #4	4	Output	Output #16			
5	Output	Output #5	5	Output	Output #17			
6	Output	Output #6	6	Output	Output #18			
7	Output	Output #7	7	Output	Output #19			
8	Output	Output #8	8	Output	Output #20			
9	Output	Output #9	9	Output	Output #21			
10	Output	Output #10	10	Output	Output #22			
11	Output	Output #11	11	Output	Output #23			
12	Output	Output #12	12	Output	Output #24			

Note

Can be ordered Sinking or Sourcing.
See E16 thru E21 jumper settings in section titled Addressing and Jumper Settings.

Wiring Output Terminal Blocks

Sourcing Outputs

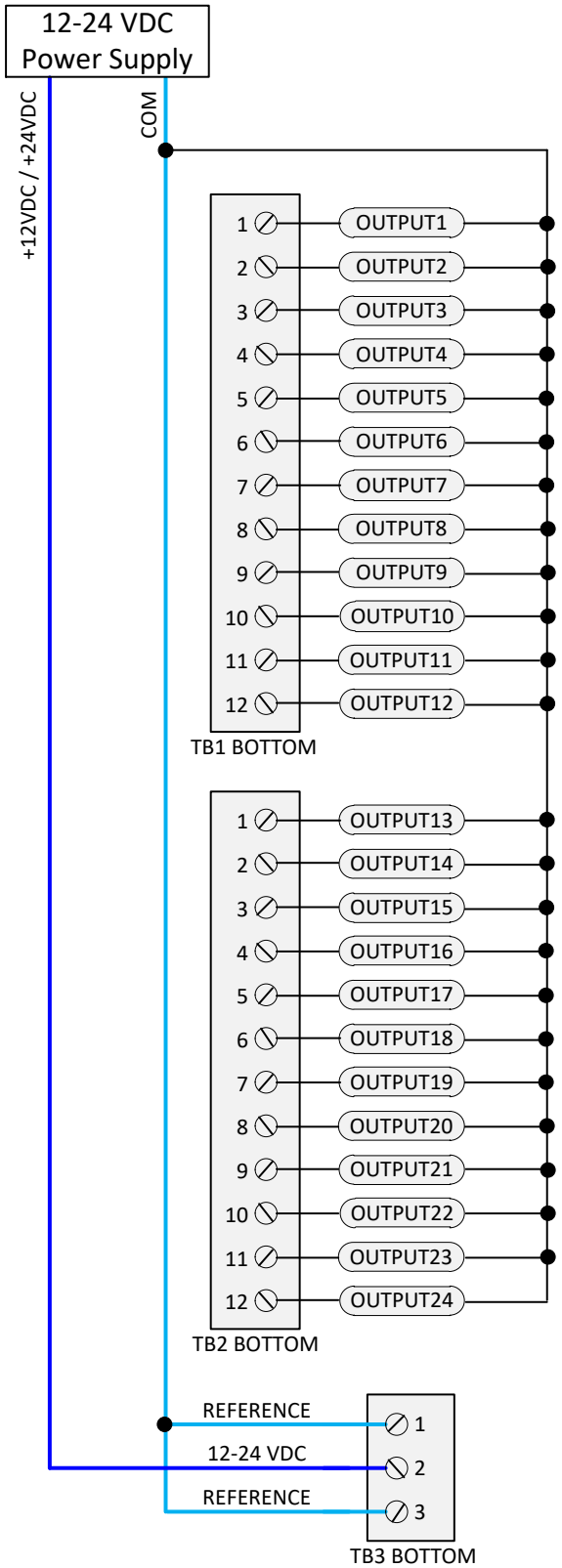

Sinking Outputs

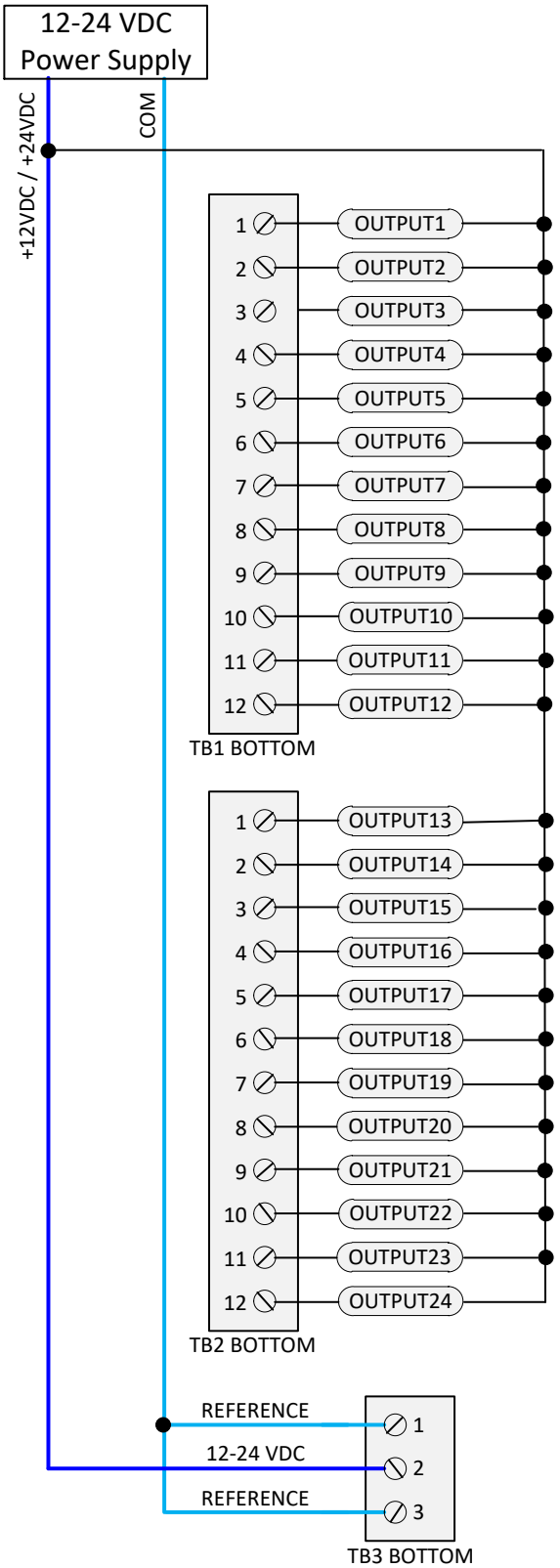

D-Sub Option

J1 Top: Inputs 1 thru 12

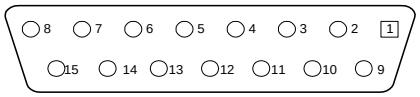

Front View

Pin #	Function	Description	Notes
1	Input	Input #1	Sinking/Sourcing
2	Input	Input #3	
3	Input	Input #5	
4	Input	Input #7	
5	Input	Input #9	
6	Input	Input #11	
7	Reference	Reference Voltage for Inputs 1-8	12-24V for sinking / 0V for sourcing
8	Reference	Reference Voltage for Inputs 17-24	
9	Input	Input #2	Sinking/Sourcing
10	Input	Input #4	
11	Input	Input #6	
12	Input	Input #8	
13	Input	Input #10	
14	Input	Input #12	
15	Reference	Reference Voltage for Inputs 9-16	12-24V for sinking / 0V for sourcing

J2 Top: Inputs 13 thru 24

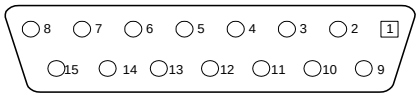

Front View

Pin #	Function	Description	Notes
1	Input	Input #13	Sinking/Sourcing
2	Input	Input #15	
3	Input	Input #17	
4	Input	Input #19	
5	Input	Input #21	
6	Input	Input #23	
7	Reference	Reference Voltage for Inputs 1-8	12-24V for sinking / 0V for sourcing
8	Reference	Reference Voltage for Inputs 17-24	
9	Input	Input #14	Sinking/Sourcing
10	Input	Input #16	
11	Input	Input #18	
12	Input	Input #20	
13	Input	Input #22	
14	Input	Input #24	
15	Reference	Reference Voltage for Inputs 9-16	12-24V for sinking / 0V for sourcing

Wiring Input DB15 Connectors

Sourcing Inputs

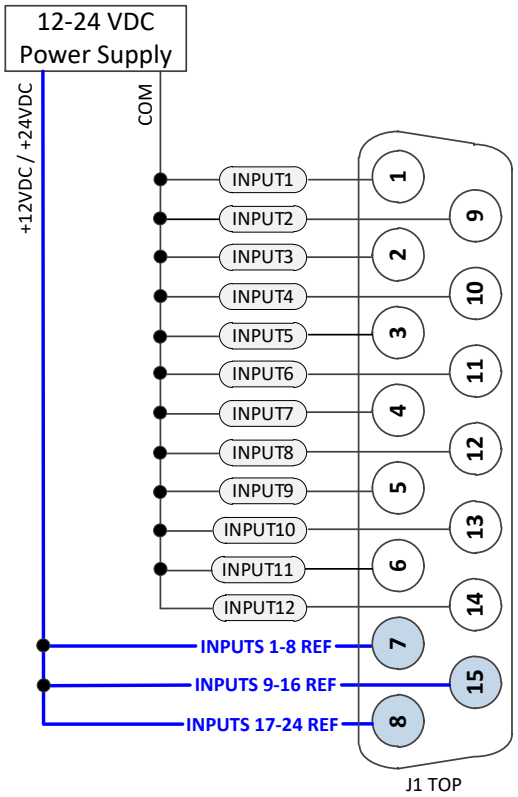

Sinking Inputs

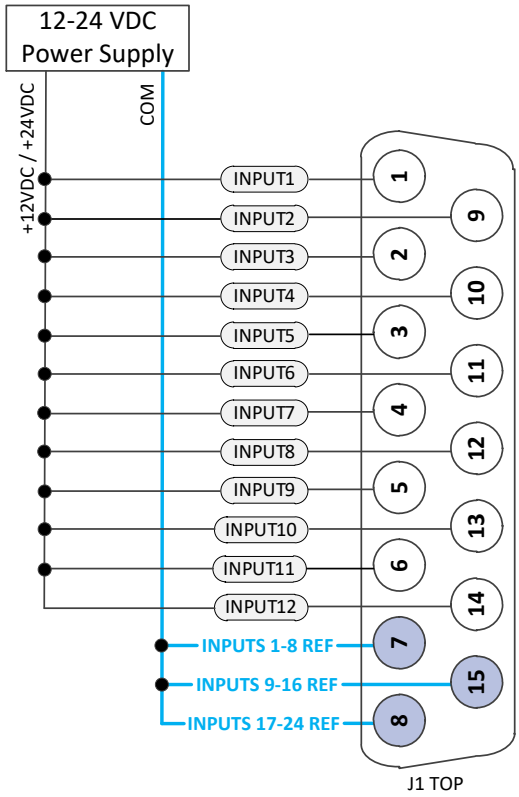

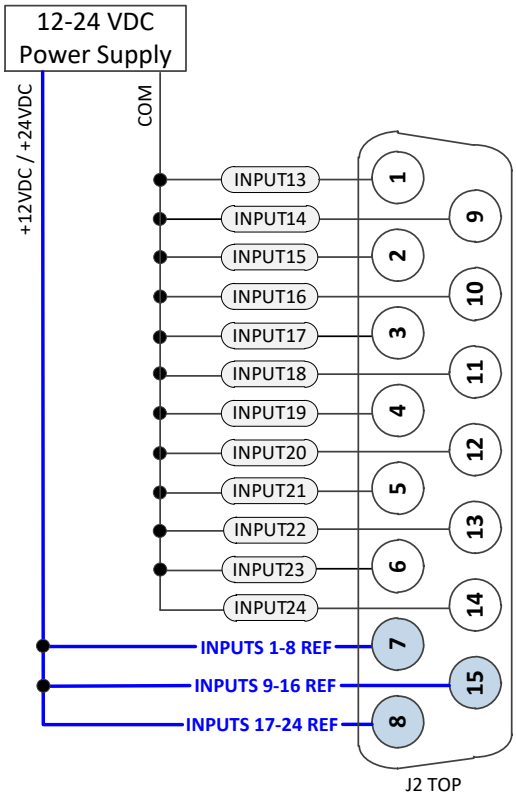

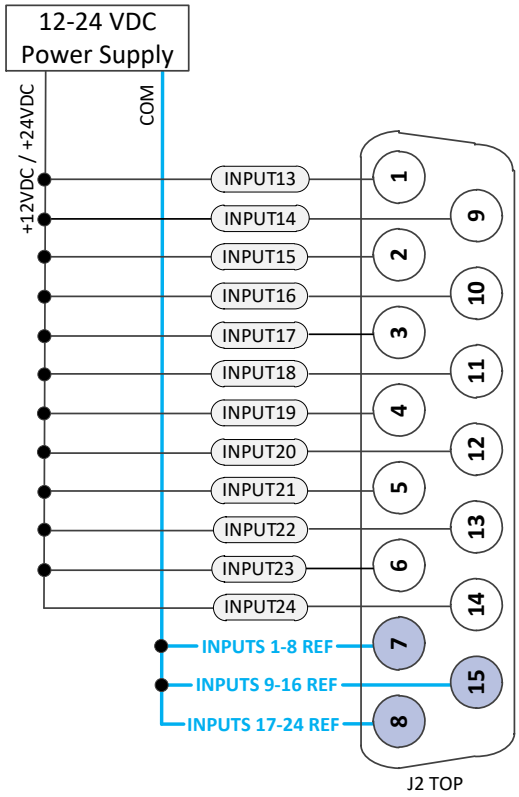

J1 Bottom: Outputs 1 thru 12

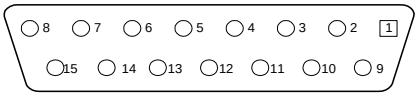

Front View

Pin #	Function	Description	Notes
1	Output	Output #1	Can be Sinking or Sourcing. See E16 thru E21 jumper settings in section titled Addressing and Jumper Settings.
2	Output	Output #3	
3	Output	Output #5	
4	Output	Output #7	
5	Output	Output #9	
6	Output	Output #11	
7	Reference	Reference voltage	
8	Reference	Reference voltage	
9	Output	Output #2	
10	Output	Output #4	
11	Output	Output #6	
12	Output	Output #8	
13	Output	Output #10	
14	Output	Output #12	
15	Voltage	12-24V	

J2 Bottom: Outputs 13 thru 24

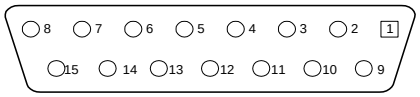

Front View

Pin #	Function	Description	Notes
1	Output	Output #13	Can be Sinking or Sourcing. See E16 thru E21 jumper settings in section titled Addressing and Jumper Settings.
2	Output	Output #15	
3	Output	Output #17	
4	Output	Output #19	
5	Output	Output #21	
6	Output	Output #23	
7	Reference	Reference voltage	
8	Reference	Reference voltage	
9	Output	Output #14	
10	Output	Output #16	
11	Output	Output #18	
12	Output	Output #20	
13	Output	Output #22	
14	Output	Output #24	
15	Voltage	12-24V	

Wiring Output DB15 Connectors

Sourcing Outputs

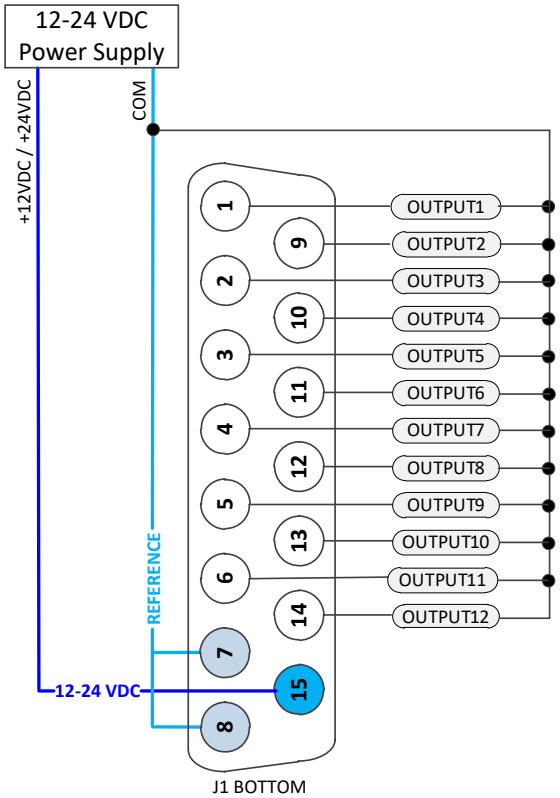

Sinking Outputs

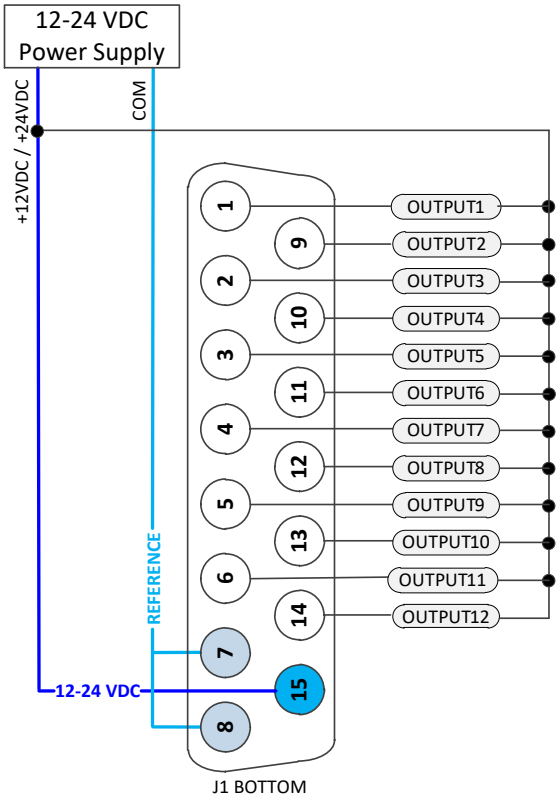

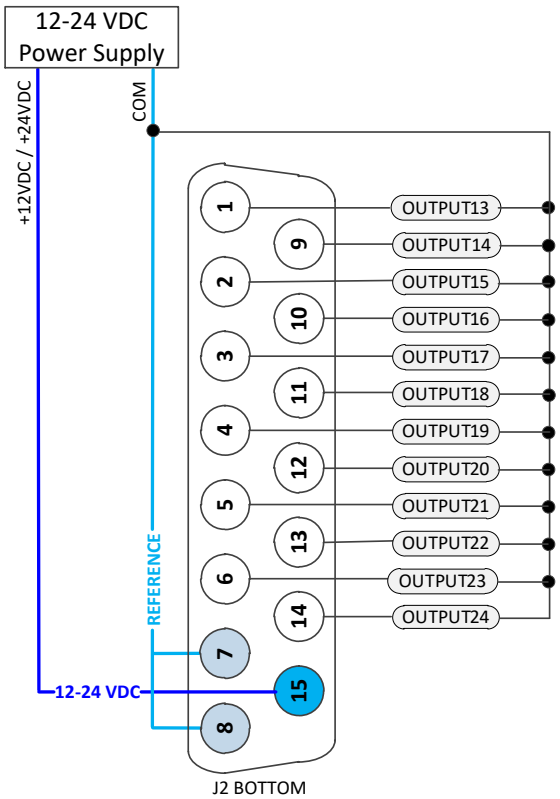

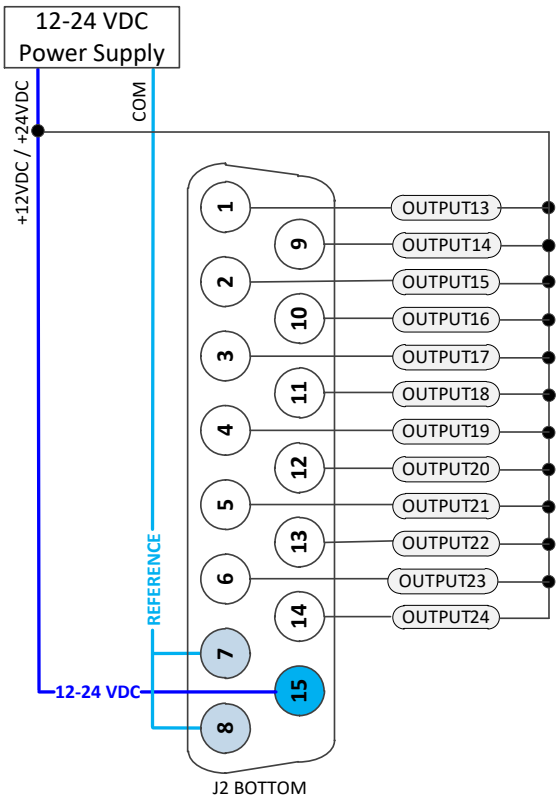

UBUS Pinouts

P1 UBUS
(96-Pin Header)

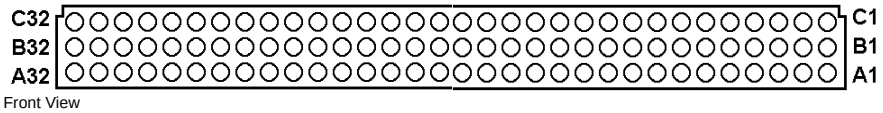

Pin #	Row A	Row B	Row C	Notes
1	+5Vdc	+5Vdc	+5Vdc	
2	GND	GND	GND	
3	BD01	DAT0	BD00	
4	BD03	SEL0	BD02	
5	BD05	DAT1	BD04	
6	BD07	SEL1	BD06	
7	BD09	DAT2	BD08	
8	BD11	SEL2	BD10	
9	BD13	DAT3	BD12	
10	BD15	SEL3	BD14	
11	BD17	DAT4	BD16	
12	BD19	SEL4	BD18	
13	BD21	DAT5	BD20	
14	BD23	SEL5	BD22	
15	BS1	DAT6	BS0	
16	BA01	SEL6	BA00	
17	BA03	DAT7	BA02	
18	BX/Y	SEL7	BA04	
19	CS3-	BA06	CS2-	
20	BA05	BA07	CS4-	
21	CS12-	BA08	CS10-	
22	CS16-	BA09	CS14-	
23	BA13	BA10	BA12	
24	BRD-	BA11	BWR-	
25	BS3	MEMCS0-	BS2	
26	WAIT-	MEMCS1-	RESET	
27	PHASE+	IREQ1-	SERVO+	
28	PHASE-	IREQ2-	SERVO-	
29	ANALOG	GND IREQ3-	ANALOG GND	
30	-15Vdc	PWRGND	+15Vdc	
31	GND	GND	GND	
32	+5Vdc	+5Vdc	+5Vdc	

For more details about the JEXP, see the UBUS Specification Document.

SCHEMATICS

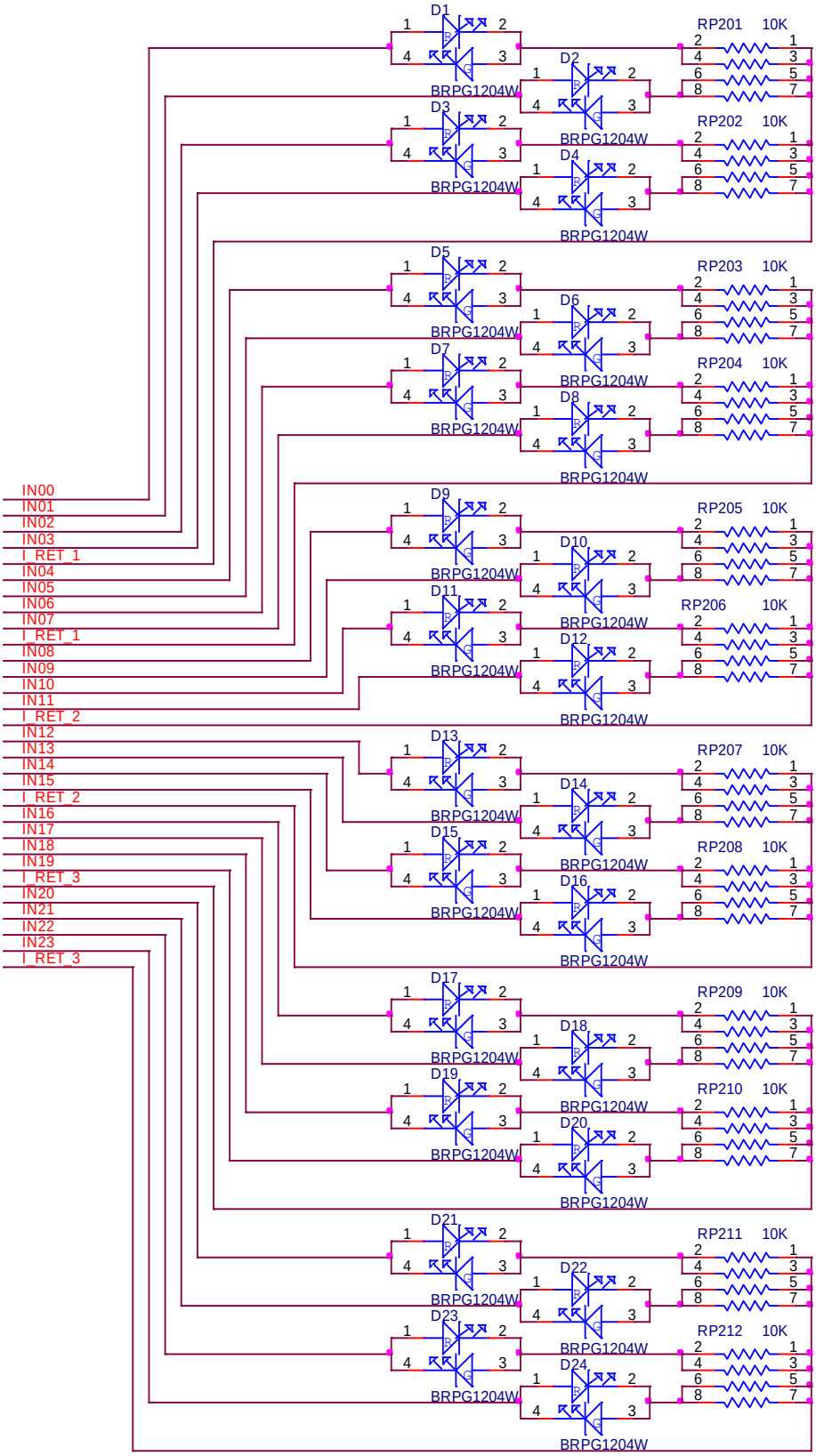
D1
D2
D3
D4
D5
D6
D7
D8
D9
D10
D11
D12
D13
D14
D15
D16
D17
D18
D19
D20
D21
D22
D23
D24
BRPG1204W
RP201 10K
RP202 10K
RP203 10K
RP204 10K
RP205 10K
RP206 10K
RP207 10K
RP208 10K
RP209 10K
RP210 10K
RP211 10K
RP212 10K
IN00
IN01
IN02
IN03
I_RET_1
IN04
IN05
IN06
IN07
I_RET_1
IN08
IN09
IN10
IN11
I_RET_2
IN12
IN13
IN14
IN15
I_RET_2
IN16
IN17
IN18
IN19
I_RET_3
IN20
IN21
IN22
IN23
I_RET_3

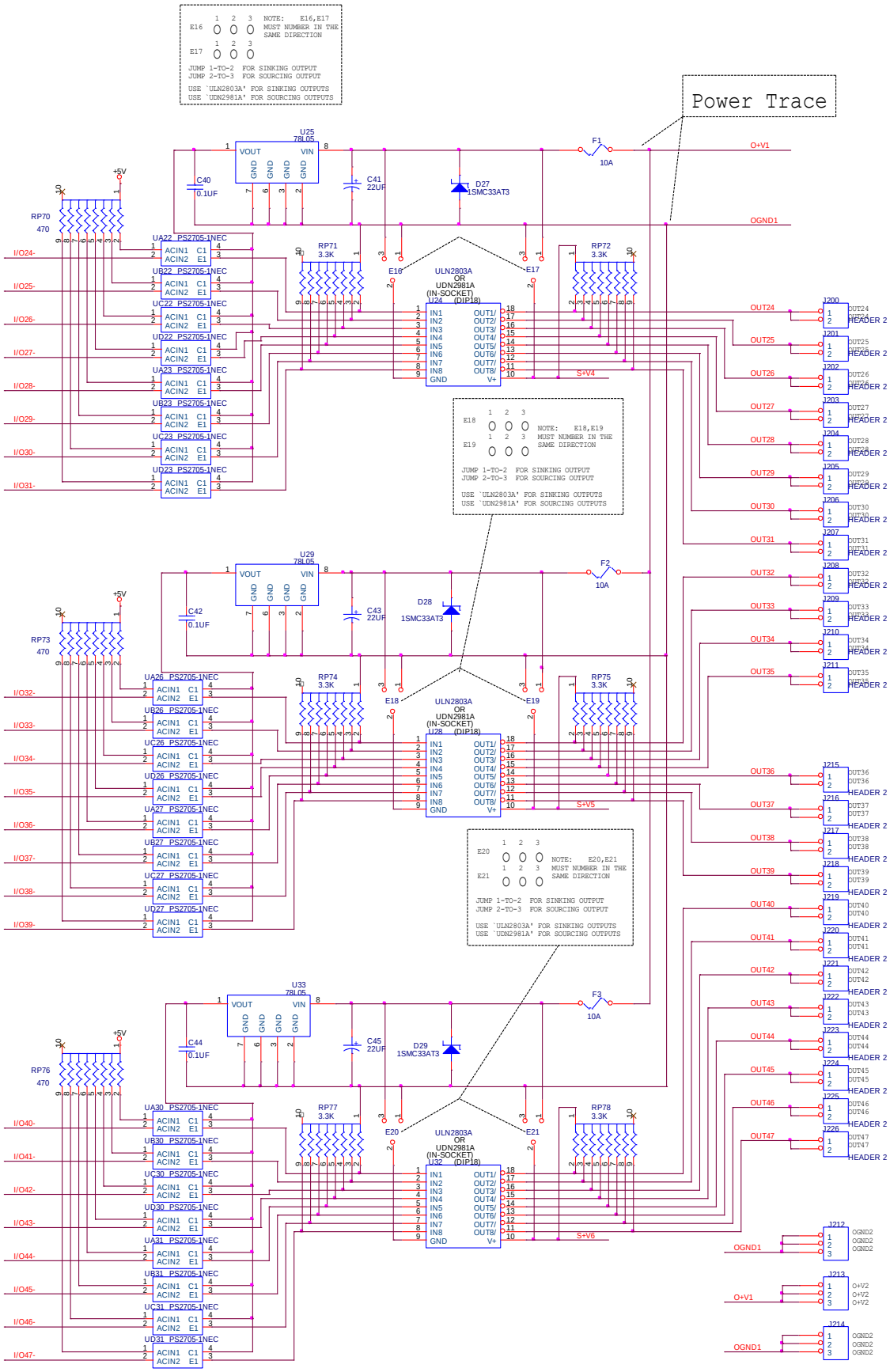
Power Trace
E16 1 2 3
E17 1 2 3
NOTE: E16,E17 MUST NUMBER IN THE SAME DIRECTION
JUMP 1-TO-2 FOR SINKING OUTPUT
JUMP 2-TO-3 FOR SOURCING OUTPUT
USE 'ULN2803A' FOR SINKING OUTPUTS
USE 'UDN2981A' FOR SOURCING OUTPUTS
U25 78L05
VOUT VIN GND GND GND GND
C40 0.1UF
C41 22UF
D27 1SMC33AT3
F1 10A
O+V1
OGND1
+5V
RP70 470
RP71 3.3K
RP72 3.3K
ULN2803A OR UDN2981A (IN-SOCKET) U24 (DIP18)
IN1 IN2 IN3 IN4 IN5 IN6 IN7 IN8 GND
OUT1/ OUT2/ OUT3/ OUT4/ OUT5/ OUT6/ OUT7/ OUT8/ V+
S+V4
E18 1 2 3
E19 1 2 3
NOTE: E18,E19 MUST NUMBER IN THE SAME DIRECTION
JUMP 1-TO-2 FOR SINKING OUTPUT
JUMP 2-TO-3 FOR SOURCING OUTPUT
USE 'ULN2803A' FOR SINKING OUTPUTS
USE 'UDN2981A' FOR SOURCING OUTPUTS
U29 78L05
C42 0.1UF
C43 22UF
D28 1SMC33AT3
F2 10A
RP73 470
RP74 3.3K
RP75 3.3K
ULN2803A OR UDN2981A (IN-SOCKET) U28 (DIP18)
S+V5
E20 1 2 3
E21 1 2 3
NOTE: E20,E21 MUST NUMBER IN THE SAME DIRECTION
JUMP 1-TO-2 FOR SINKING OUTPUT
JUMP 2-TO-3 FOR SOURCING OUTPUT
USE 'ULN2803A' FOR SINKING OUTPUTS
USE 'UDN2981A' FOR SOURCING OUTPUTS
U33 78L05
C44 0.1UF
C45 22UF
D29 1SMC33AT3
F3 10A
RP76 470
RP77 3.3K
RP78 3.3K
ULN2803A OR UDN2981A (IN-SOCKET) U32 (DIP18)
S+V6
UA22_PS2705-1NEC
UB22_PS2705-1NEC
UC22_PS2705-1NEC
UD22_PS2705-1NEC
UA23_PS2705-1NEC
UB23_PS2705-1NEC
UC23_PS2705-1NEC
UD23_PS2705-1NEC
UA26_PS2705-1NEC
UB26_PS2705-1NEC
UC26_PS2705-1NEC
UD26_PS2705-1NEC
UA27_PS2705-1NEC
UB27_PS2705-1NEC
UC27_PS2705-1NEC
UD27_PS2705-1NEC
UA30_PS2705-1NEC
UB30_PS2705-1NEC
UC30_PS2705-1NEC
UD30_PS2705-1NEC
UA31_PS2705-1NEC
UB31_PS2705-1NEC
UC31_PS2705-1NEC
UD31_PS2705-1NEC
ACIN1 C1 ACIN2 E1
I/O24- I/O25- I/O26- I/O27- I/O28- I/O29- I/O30- I/O31-
I/O32- I/O33- I/O34- I/O35- I/O36- I/O37- I/O38- I/O39-
I/O40- I/O41- I/O42- I/O43- I/O44- I/O45- I/O46- I/O47-
OUT24 OUT25 OUT26 OUT27 OUT28 OUT29 OUT30 OUT31 OUT32 OUT33 OUT34 OUT35 OUT36 OUT37 OUT38 OUT39 OUT40 OUT41 OUT42 OUT43 OUT44 OUT45 OUT46 OUT47
HEADER 2
J200 J201 J202 J203 J204 J205 J206 J207 J208 J209 J210 J211 J215 J216 J217 J218 J219 J220 J221 J222 J223 J224 J225 J226
J212 OGND2 OGND2 OGND2
J213 O+V2 O+V2 O+V2
J214 OGND2 OGND2 OGND2

APPENDIX A: USING THE UMAC CONFIG PRO2 TOOL

The UMAC Config Pro2 tool can be used to auto detect and display information on the CPU and accessories present in the UMAC. It can be launched from the Executive:

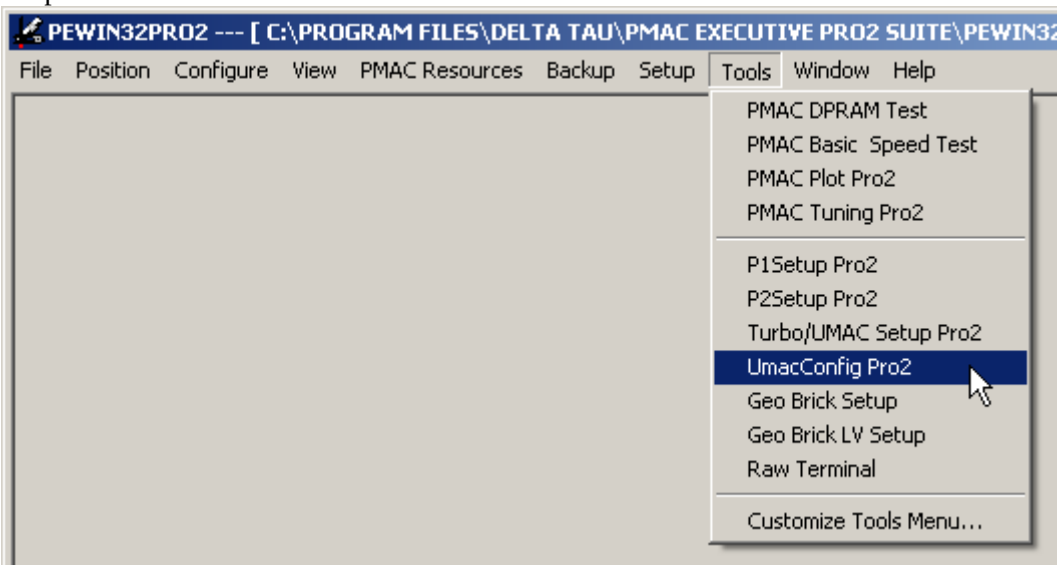

Click on "Select", and then select the correct UMAC communication connection.

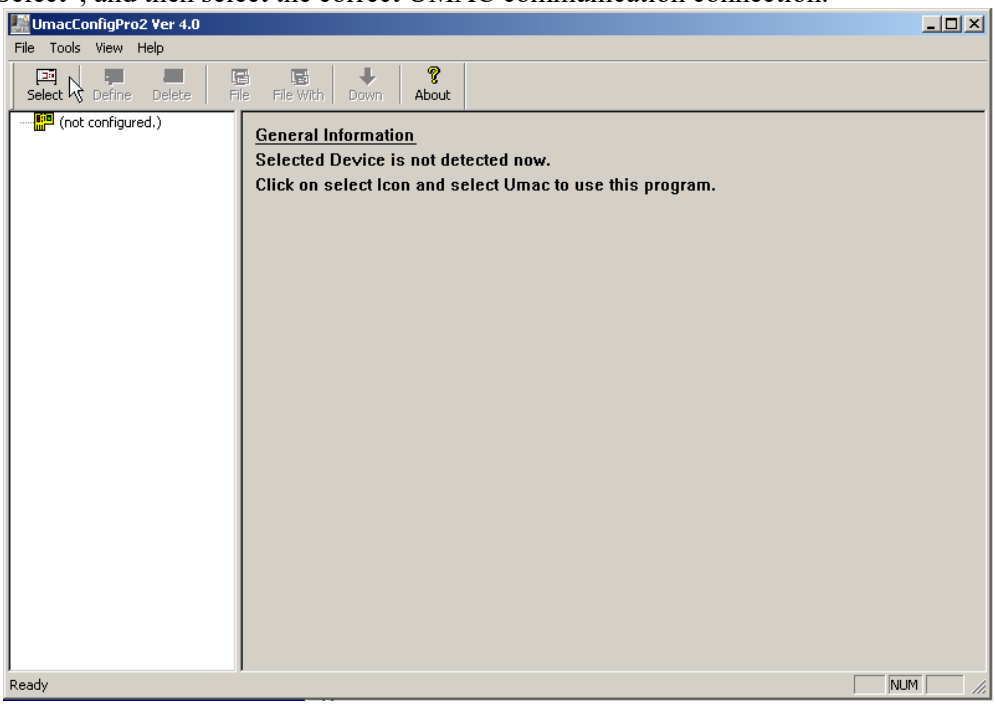

The ACC-11E, like the other older Type A accessories, appears in the list as “Unknown”.

Left-click on the “Unknown” accessory.

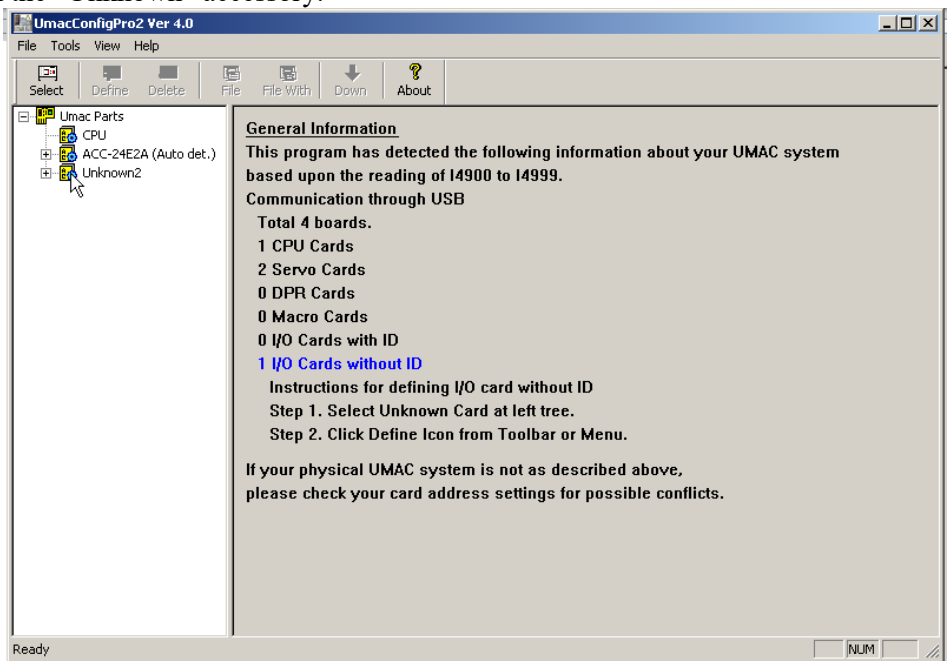

Although the precise accessory number is not detected, the base address and address jumper settings are detected and displayed.

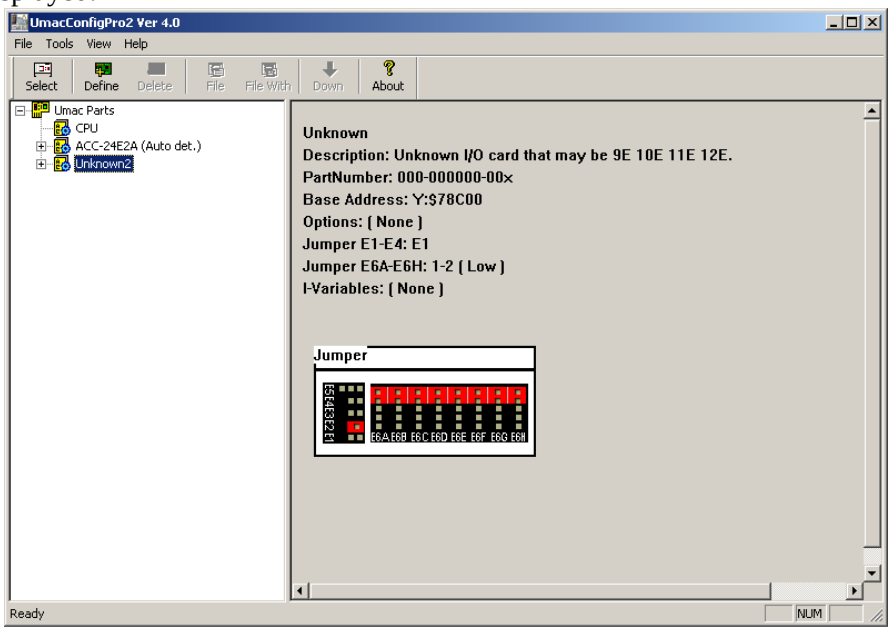

Next, the correct accessory number can be entered and a list of suggested M-Variable definitions can be accessed or downloaded. Right click on “Unknown” and select “Define Accessory”.

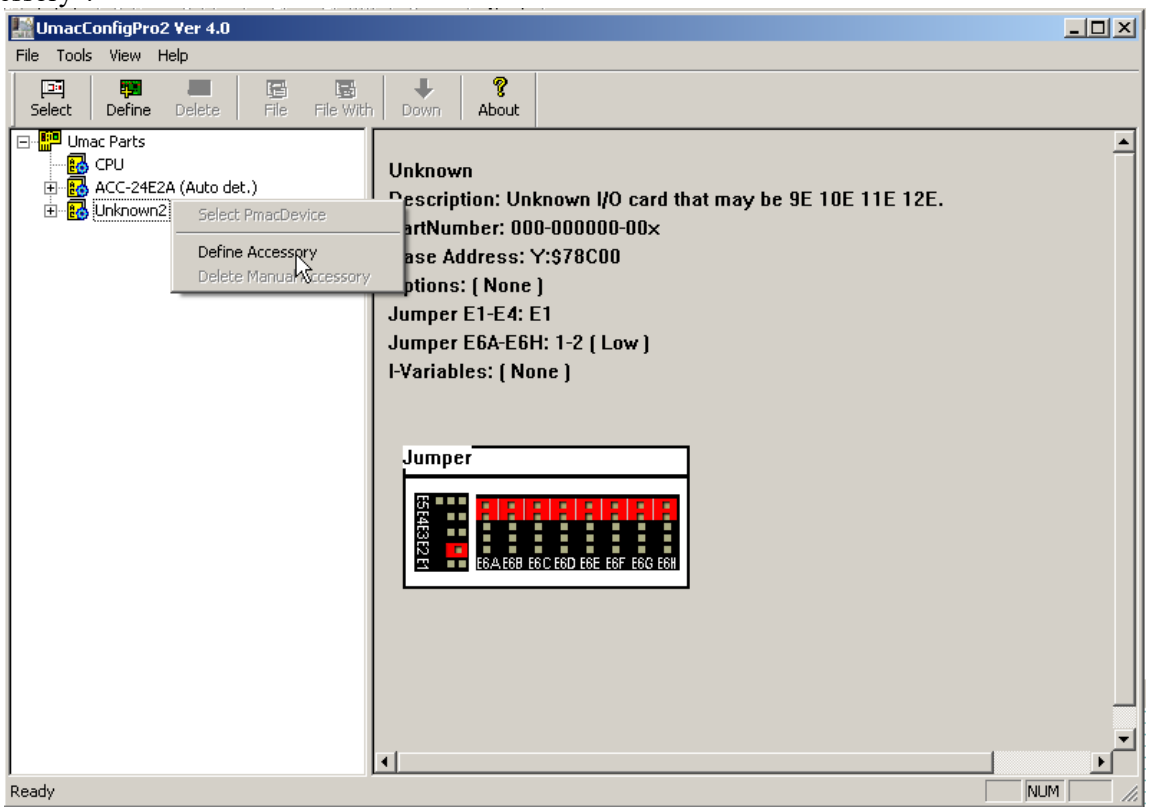

Click on the “Next” button.

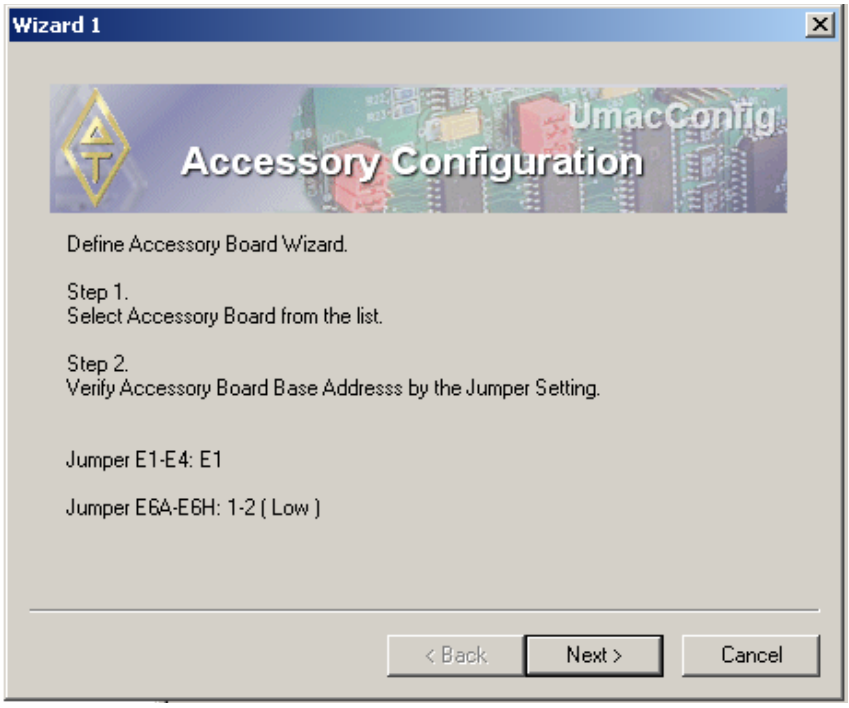

Select the accessory type and click “Next”.

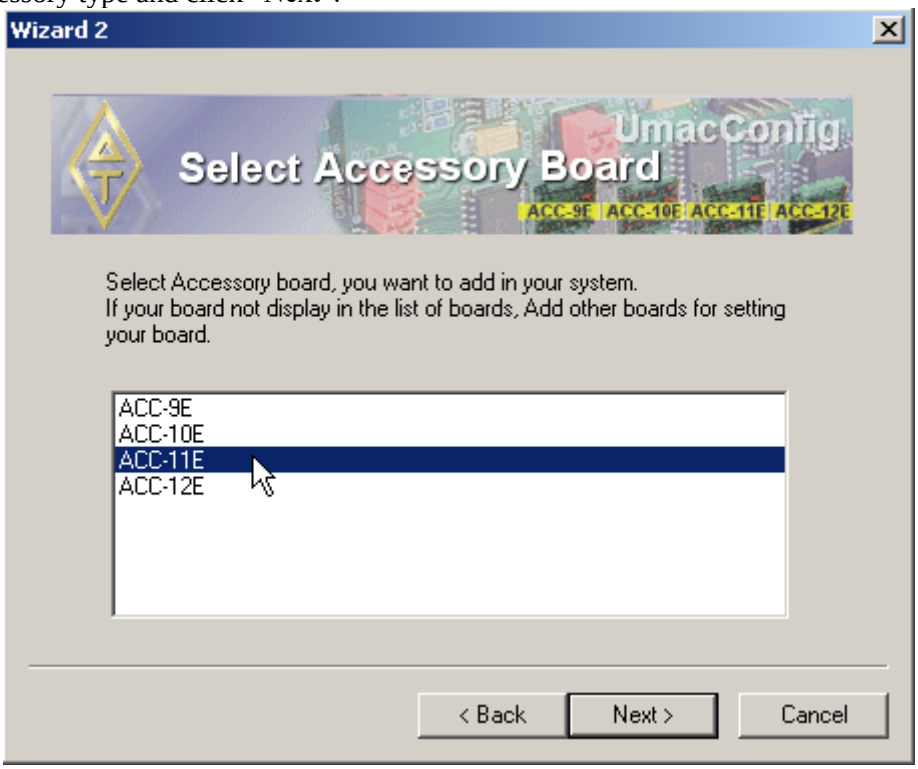

Verify the jumper settings and click “Next”.

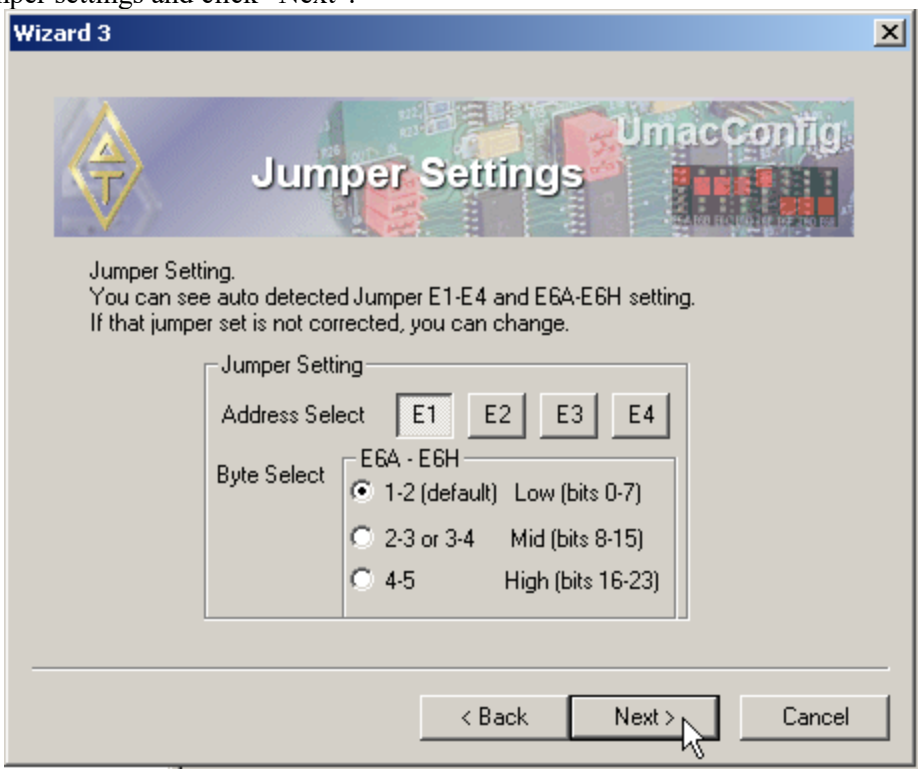

Click “Next”.

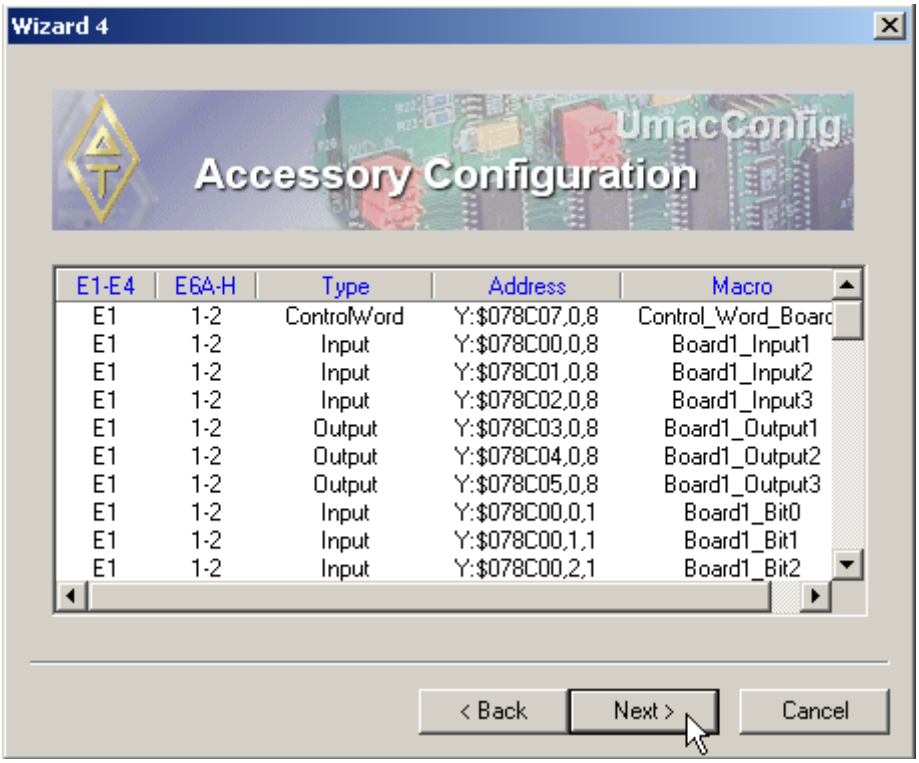

Click “Finish”.

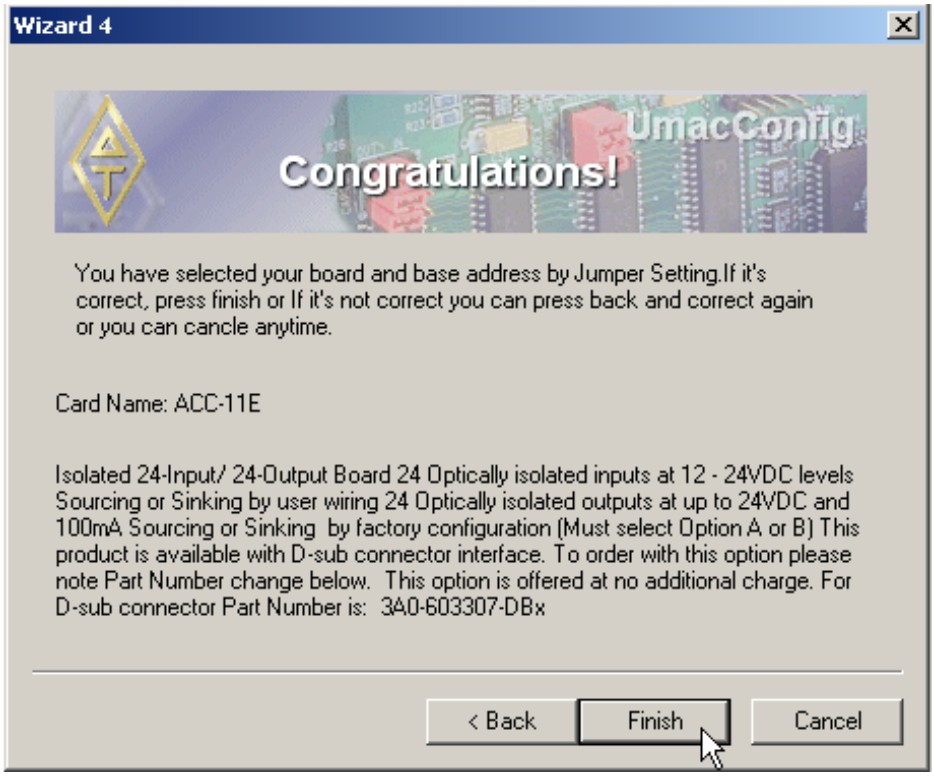

Click on "M-Variables". The list of M-Variable definitions that appears can be downloaded by clicking the "Down" icon (yellow arrow pointing down). Click on the "File" icon to locate the text file.

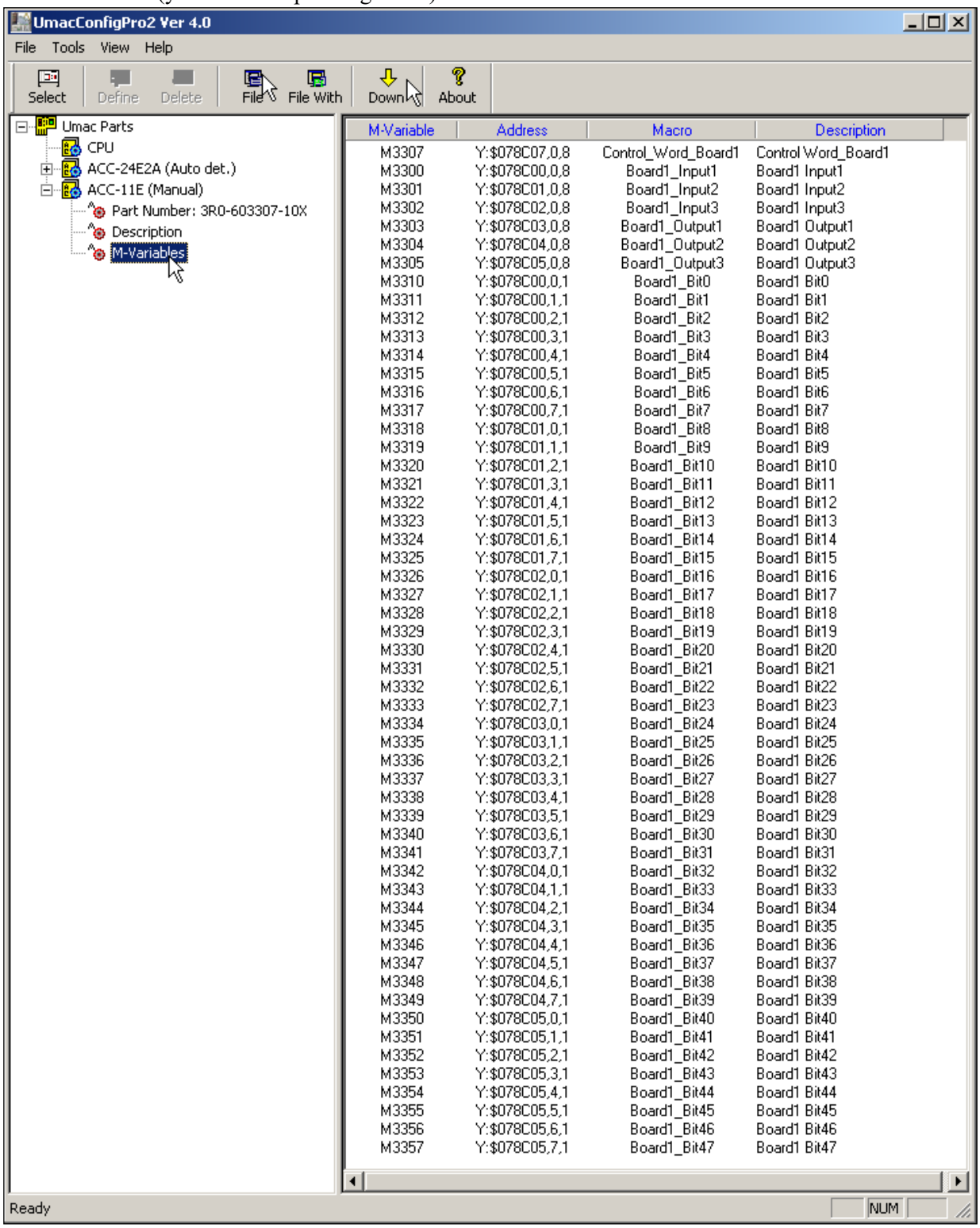

M-Variable	Address	Macro	Description
M3307	Y:$078C07,0,8	Control_Word_Board1	Control Word_Board1
M3300	Y:$078C00,0,8	Board1_Input1	Board1 Input1
M3301	Y:$078C01,0,8	Board1_Input2	Board1 Input2
M3302	Y:$078C02,0,8	Board1_Input3	Board1 Input3
M3303	Y:$078C03,0,8	Board1_Output1	Board1 Output1
M3304	Y:$078C04,0,8	Board1_Output2	Board1 Output2
M3305	Y:$078C05,0,8	Board1_Output3	Board1 Output3
M3310	Y:$078C00,0,1	Board1_Bit0	Board1 Bit0
M3311	Y:$078C00,1,1	Board1_Bit1	Board1 Bit1
M3312	Y:$078C00,2,1	Board1_Bit2	Board1 Bit2
M3313	Y:$078C00,3,1	Board1_Bit3	Board1 Bit3
M3314	Y:$078C00,4,1	Board1_Bit4	Board1 Bit4
M3315	Y:$078C00,5,1	Board1_Bit5	Board1 Bit5
M3316	Y:$078C00,6,1	Board1_Bit6	Board1 Bit6
M3317	Y:$078C00,7,1	Board1_Bit7	Board1 Bit7
M3318	Y:$078C01,0,1	Board1_Bit8	Board1 Bit8
M3319	Y:$078C01,1,1	Board1_Bit9	Board1 Bit9
M3320	Y:$078C01,2,1	Board1_Bit10	Board1 Bit10
M3321	Y:$078C01,3,1	Board1_Bit11	Board1 Bit11
M3322	Y:$078C01,4,1	Board1_Bit12	Board1 Bit12
M3323	Y:$078C01,5,1	Board1_Bit13	Board1 Bit13
M3324	Y:$078C01,6,1	Board1_Bit14	Board1 Bit14
M3325	Y:$078C01,7,1	Board1_Bit15	Board1 Bit15
M3326	Y:$078C02,0,1	Board1_Bit16	Board1 Bit16
M3327	Y:$078C02,1,1	Board1_Bit17	Board1 Bit17
M3328	Y:$078C02,2,1	Board1_Bit18	Board1 Bit18
M3329	Y:$078C02,3,1	Board1_Bit19	Board1 Bit19
M3330	Y:$078C02,4,1	Board1_Bit20	Board1 Bit20
M3331	Y:$078C02,5,1	Board1_Bit21	Board1 Bit21
M3332	Y:$078C02,6,1	Board1_Bit22	Board1 Bit22
M3333	Y:$078C02,7,1	Board1_Bit23	Board1 Bit23
M3334	Y:$078C03,0,1	Board1_Bit24	Board1 Bit24
M3335	Y:$078C03,1,1	Board1_Bit25	Board1 Bit25
M3336	Y:$078C03,2,1	Board1_Bit26	Board1 Bit26
M3337	Y:$078C03,3,1	Board1_Bit27	Board1 Bit27
M3338	Y:$078C03,4,1	Board1_Bit28	Board1 Bit28
M3339	Y:$078C03,5,1	Board1_Bit29	Board1 Bit29
M3340	Y:$078C03,6,1	Board1_Bit30	Board1 Bit30
M3341	Y:$078C03,7,1	Board1_Bit31	Board1 Bit31
M3342	Y:$078C04,0,1	Board1_Bit32	Board1 Bit32
M3343	Y:$078C04,1,1	Board1_Bit33	Board1 Bit33
M3344	Y:$078C04,2,1	Board1_Bit34	Board1 Bit34
M3345	Y:$078C04,3,1	Board1_Bit35	Board1 Bit35
M3346	Y:$078C04,4,1	Board1_Bit36	Board1 Bit36
M3347	Y:$078C04,5,1	Board1_Bit37	Board1 Bit37
M3348	Y:$078C04,6,1	Board1_Bit38	Board1 Bit38
M3349	Y:$078C04,7,1	Board1_Bit39	Board1 Bit39
M3350	Y:$078C05,0,1	Board1_Bit40	Board1 Bit40
M3351	Y:$078C05,1,1	Board1_Bit41	Board1 Bit41
M3352	Y:$078C05,2,1	Board1_Bit42	Board1 Bit42
M3353	Y:$078C05,3,1	Board1_Bit43	Board1 Bit43
M3354	Y:$078C05,4,1	Board1_Bit44	Board1 Bit44
M3355	Y:$078C05,5,1	Board1_Bit45	Board1 Bit45
M3356	Y:$078C05,6,1	Board1_Bit46	Board1 Bit46
M3357	Y:$078C05,7,1	Board1_Bit47	Board1 Bit47

APPENDIX B: FULL TURBO UMAC M-VARIABLE MAPPINGS

This appendix provides suggested M-Variables for all twelve possible ACC-11E address settings.

Base Address $78C00, Low Byte

```
// Single-bit variables used for accessing I/O points
M7000->Y:$078C00,0,1  ;Card 1, Input 1
M7001->Y:$078C00,1,1  ;Card 1, Input 2
M7002->Y:$078C00,2,1  ;Card 1, Input 3
M7003->Y:$078C00,3,1  ;Card 1, Input 4
M7004->Y:$078C00,4,1  ;Card 1, Input 5
M7005->Y:$078C00,5,1  ;Card 1, Input 6
M7006->Y:$078C00,6,1  ;Card 1, Input 7
M7007->Y:$078C00,7,1  ;Card 1, Input 8
M7008->Y:$078C01,0,1  ;Card 1, Input 9
M7009->Y:$078C01,1,1  ;Card 1, Input 10
M7010->Y:$078C01,2,1  ;Card 1, Input 11
M7011->Y:$078C01,3,1  ;Card 1, Input 12
M7012->Y:$078C01,4,1  ;Card 1, Input 13
M7013->Y:$078C01,5,1  ;Card 1, Input 14
M7014->Y:$078C01,6,1  ;Card 1, Input 15
M7015->Y:$078C01,7,1  ;Card 1, Input 16
M7016->Y:$078C02,0,1  ;Card 1, Input 17
M7017->Y:$078C02,1,1  ;Card 1, Input 18
M7018->Y:$078C02,2,1  ;Card 1, Input 19
M7019->Y:$078C02,3,1  ;Card 1, Input 20
M7020->Y:$078C02,4,1  ;Card 1, Input 21
M7021->Y:$078C02,5,1  ;Card 1, Input 22
M7022->Y:$078C02,6,1  ;Card 1, Input 23
M7023->Y:$078C02,7,1  ;Card 1, Input 24

M7024->Y:$078C03,0,1  ;Card 1, Output 1
M7025->Y:$078C03,1,1  ;Card 1, Output 2
M7026->Y:$078C03,2,1  ;Card 1, Output 3
M7027->Y:$078C03,3,1  ;Card 1, Output 4
M7028->Y:$078C03,4,1  ;Card 1, Output 5
M7029->Y:$078C03,5,1  ;Card 1, Output 6
M7030->Y:$078C03,6,1  ;Card 1, Output 7
M7031->Y:$078C03,7,1  ;Card 1, Output 8
M7032->Y:$078C04,0,1  ;Card 1, Output 9
M7033->Y:$078C04,1,1  ;Card 1, Output 10
M7034->Y:$078C04,2,1  ;Card 1, Output 11
M7035->Y:$078C04,3,1  ;Card 1, Output 12
M7036->Y:$078C04,4,1  ;Card 1, Output 13
M7037->Y:$078C04,5,1  ;Card 1, Output 14
M7038->Y:$078C04,6,1  ;Card 1, Output 15
M7039->Y:$078C04,7,1  ;Card 1, Output 16
M7040->Y:$078C05,0,1  ;Card 1, Output 17
M7041->Y:$078C05,1,1  ;Card 1, Output 18
M7042->Y:$078C05,2,1  ;Card 1, Output 19
M7043->Y:$078C05,3,1  ;Card 1, Output 20
M7044->Y:$078C05,4,1  ;Card 1, Output 21
M7045->Y:$078C05,5,1  ;Card 1, Output 22
M7046->Y:$078C05,6,1  ;Card 1, Output 23
M7047->Y:$078C05,7,1  ;Card 1, Output 24

// Byte-wide variables used for power-on configuration
M3300->Y:$78C00,0,8,U          // I/O Card 1 Inputs 00-07 as byte
M3301->Y:$78C01,0,8,U          // I/O Card 1 Inputs 08-15 as byte
M3302->Y:$78C02,0,8,U          // I/O Card 1 Inputs 16-23 as byte
M3303->Y:$78C03,0,8,U          // I/O Card 1 Outputs 00-07 as byte
M3304->Y:$78C04,0,8,U          // I/O Card 1 Outputs 08-15 as byte
M3305->Y:$78C05,0,8,U          // I/O Card 1 Outputs 16-23 as byte
M3306->Y:$78C06,0,8,U          // I/O Card 1 latch inputs
M3307->Y:$78C07,0,8,U          // I/O Card 1 control register
```

Base Address $78C00, Middle Byte

```
// Single-bit variables used for accessing I/O points
M7048->Y:$078C00,8,1  ;Card 2, Input 1
M7049->Y:$078C00,9,1  ;Card 2, Input 2
M7050->Y:$078C00,10,1  ;Card 2, Input 3
M7051->Y:$078C00,11,1  ;Card 2, Input 4
M7052->Y:$078C00,12,1  ;Card 2, Input 5
M7053->Y:$078C00,13,1  ;Card 2, Input 6
M7054->Y:$078C00,14,1  ;Card 2, Input 7
M7055->Y:$078C00,15,1  ;Card 2, Input 8
M7056->Y:$078C01,8,1  ;Card 2, Input 9
M7057->Y:$078C01,9,1  ;Card 2, Input 10
M7058->Y:$078C01,10,1  ;Card 2, Input 11
M7059->Y:$078C01,11,1  ;Card 2, Input 12
M7060->Y:$078C01,12,1  ;Card 2, Input 13
M7061->Y:$078C01,13,1  ;Card 2, Input 14
M7062->Y:$078C01,14,1  ;Card 2, Input 15
M7063->Y:$078C01,15,1  ;Card 2, Input 16
M7064->Y:$078C02,8,1  ;Card 2, Input 17
M7065->Y:$078C02,9,1  ;Card 2, Input 18
M7066->Y:$078C02,10,1  ;Card 2, Input 19
M7067->Y:$078C02,11,1  ;Card 2, Input 20
M7068->Y:$078C02,12,1  ;Card 2, Input 21
M7069->Y:$078C02,13,1  ;Card 2, Input 22
M7070->Y:$078C02,14,1  ;Card 2, Input 23
M7071->Y:$078C02,15,1  ;Card 2, Input 24
M7072->Y:$078C03,8,1  ;Card 2, Output 1
M7073->Y:$078C03,9,1  ;Card 2, Output 2
M7074->Y:$078C03,10,1  ;Card 2, Output 3
M7075->Y:$078C03,11,1  ;Card 2, Output 4
M7076->Y:$078C03,12,1  ;Card 2, Output 5
M7077->Y:$078C03,13,1  ;Card 2, Output 6
M7078->Y:$078C03,14,1  ;Card 2, Output 7
M7079->Y:$078C03,15,1  ;Card 2, Output 8
M7080->Y:$078C04,8,1  ;Card 2, Output 9
M7081->Y:$078C04,9,1  ;Card 2, Output 10
M7082->Y:$078C04,10,1  ;Card 2, Output 11
M7083->Y:$078C04,11,1  ;Card 2, Output 12
M7084->Y:$078C04,12,1  ;Card 2, Output 13
M7085->Y:$078C04,13,1  ;Card 2, Output 14
M7086->Y:$078C04,14,1  ;Card 2, Output 15
M7087->Y:$078C04,15,1  ;Card 2, Output 16
M7088->Y:$078C05,8,1  ;Card 2, Output 17
M7089->Y:$078C05,9,1  ;Card 2, Output 18
M7090->Y:$078C05,10,1  ;Card 2, Output 19
M7091->Y:$078C05,11,1  ;Card 2, Output 20
M7092->Y:$078C05,12,1  ;Card 2, Output 21
M7093->Y:$078C05,13,1  ;Card 2, Output 22
M7094->Y:$078C05,14,1  ;Card 2, Output 23
M7095->Y:$078C05,15,1  ;Card 2, Output 24

// Byte-wide variables used for power-on configuration
M3310->Y:$78C00,8,8,U         // I/O Card 2 I/O00-07 as byte
M3311->Y:$78C01,8,8,U         // I/O Card 2 I/O08-15 as byte
M3312->Y:$78C02,8,8,U         // I/O Card 2 I/O16-23 as byte
M3313->Y:$78C03,8,8,U         // I/O Card 2 I/O24-31 as byte
M3314->Y:$78C04,8,8,U         // I/O Card 2 I/O32-39 as byte
M3315->Y:$78C05,8,8,U         // I/O Card 2 I/O40-47 as byte
M3316->Y:$78C06,8,8,U         // I/O Card 2 latch inputs
M3317->Y:$78C07,8,8,U         // I/O Card 2 control register
```

Base Address $78C00, High Byte

```
// Single-bit variables used for accessing I/O points
M7096->Y:$078C00,16,1  ;Card 3, Input 1
M7097->Y:$078C00,17,1  ;Card 3, Input 2
M7098->Y:$078C00,18,1  ;Card 3, Input 3
M7099->Y:$078C00,19,1  ;Card 3, Input 4
M7100->Y:$078C00,20,1  ;Card 3, Input 5
M7101->Y:$078C00,21,1  ;Card 3, Input 6
M7102->Y:$078C00,22,1  ;Card 3, Input 7
M7103->Y:$078C00,23,1  ;Card 3, Input 8
M7104->Y:$078C01,16,1  ;Card 3, Input 9
M7105->Y:$078C01,17,1  ;Card 3, Input 10
M7106->Y:$078C01,18,1  ;Card 3, Input 11
M7107->Y:$078C01,19,1  ;Card 3, Input 12
M7108->Y:$078C01,20,1  ;Card 3, Input 13
M7109->Y:$078C01,21,1  ;Card 3, Input 14
M7110->Y:$078C01,22,1  ;Card 3, Input 15
M7111->Y:$078C01,23,1  ;Card 3, Input 16
M7112->Y:$078C02,16,1  ;Card 3, Input 17
M7113->Y:$078C02,17,1  ;Card 3, Input 18
M7114->Y:$078C02,18,1  ;Card 3, Input 19
M7115->Y:$078C02,19,1  ;Card 3, Input 20
M7116->Y:$078C02,20,1  ;Card 3, Input 21
M7117->Y:$078C02,21,1  ;Card 3, Input 22
M7118->Y:$078C02,22,1  ;Card 3, Input 23
M7119->Y:$078C02,23,1  ;Card 3, Input 24
M7120->Y:$078C03,16,1  ;Card 3, Output 1
M7121->Y:$078C03,17,1  ;Card 3, Output 2
M7122->Y:$078C03,18,1  ;Card 3, Output 3
M7123->Y:$078C03,19,1  ;Card 3, Output 4
M7124->Y:$078C03,20,1  ;Card 3, Output 5
M7125->Y:$078C03,21,1  ;Card 3, Output 6
M7126->Y:$078C03,22,1  ;Card 3, Output 7
M7127->Y:$078C03,23,1  ;Card 3, Output 8
M7128->Y:$078C04,16,1  ;Card 3, Output 9
M7129->Y:$078C04,17,1  ;Card 3, Output 10
M7130->Y:$078C04,18,1  ;Card 3, Output 11
M7131->Y:$078C04,19,1  ;Card 3, Output 12
M7132->Y:$078C04,20,1  ;Card 3, Output 13
M7133->Y:$078C04,21,1  ;Card 3, Output 14
M7134->Y:$078C04,22,1  ;Card 3, Output 15
M7135->Y:$078C04,23,1  ;Card 3, Output 16
M7136->Y:$078C05,16,1  ;Card 3, Output 17
M7137->Y:$078C05,17,1  ;Card 3, Output 18
M7138->Y:$078C05,18,1  ;Card 3, Output 19
M7139->Y:$078C05,19,1  ;Card 3, Output 20
M7140->Y:$078C05,20,1  ;Card 3, Output 21
M7141->Y:$078C05,21,1  ;Card 3, Output 22
M7142->Y:$078C05,22,1  ;Card 3, Output 23
M7143->Y:$078C05,23,1  ;Card 3, Output 24

// Byte-wide variables used for power-on configuration
M3320->Y:$78C00,16,8,U         // I/O Card 3 I/O00-07 as byte
M3321->Y:$78C01,16,8,U         // I/O Card 3 I/O08-15 as byte
M3322->Y:$78C02,16,8,U         // I/O Card 3 I/O16-23 as byte
M3323->Y:$78C03,16,8,U         // I/O Card 3 I/O24-31 as byte
M3324->Y:$78C04,16,8,U         // I/O Card 3 I/O32-39 as byte
M3325->Y:$78C05,16,8,U         // I/O Card 3 I/O40-47 as byte
M3326->Y:$78C06,16,8,U         // I/O Card 3 latch inputs
M3327->Y:$78C07,16,8,U         // I/O Card 3 control register
```

Base Address $78D00, Low Byte

```
// Single-bit variables used for accessing I/O points
M7144->Y:$078D00,0,1  ;Card 4, Input 1
M7145->Y:$078D00,1,1  ;Card 4, Input 2
M7146->Y:$078D00,2,1  ;Card 4, Input 3
M7147->Y:$078D00,3,1  ;Card 4, Input 4
M7148->Y:$078D00,4,1  ;Card 4, Input 5
M7149->Y:$078D00,5,1  ;Card 4, Input 6
M7150->Y:$078D00,6,1  ;Card 4, Input 7
M7151->Y:$078D00,7,1  ;Card 4, Input 8
M7152->Y:$078D01,0,1  ;Card 4, Input 9
M7153->Y:$078D01,1,1  ;Card 4, Input 10
M7154->Y:$078D01,2,1  ;Card 4, Input 11
M7155->Y:$078D01,3,1  ;Card 4, Input 12
M7156->Y:$078D01,4,1  ;Card 4, Input 13
M7157->Y:$078D01,5,1  ;Card 4, Input 14
M7158->Y:$078D01,6,1  ;Card 4, Input 15
M7159->Y:$078D01,7,1  ;Card 4, Input 16
M7160->Y:$078D02,0,1  ;Card 4, Input 17
M7161->Y:$078D02,1,1  ;Card 4, Input 18
M7162->Y:$078D02,2,1  ;Card 4, Input 19
M7163->Y:$078D02,3,1  ;Card 4, Input 20
M7164->Y:$078D02,4,1  ;Card 4, Input 21
M7165->Y:$078D02,5,1  ;Card 4, Input 22
M7166->Y:$078D02,6,1  ;Card 4, Input 23
M7167->Y:$078D02,7,1  ;Card 4, Input 24
M7168->Y:$078D03,0,1  ;Card 4, Output 1
M7169->Y:$078D03,1,1  ;Card 4, Output 2
M7170->Y:$078D03,2,1  ;Card 4, Output 3
M7171->Y:$078D03,3,1  ;Card 4, Output 4
M7172->Y:$078D03,4,1  ;Card 4, Output 5
M7173->Y:$078D03,5,1  ;Card 4, Output 6
M7174->Y:$078D03,6,1  ;Card 4, Output 7
M7175->Y:$078D03,7,1  ;Card 4, Output 8
M7176->Y:$078D04,0,1  ;Card 4, Output 9
M7177->Y:$078D04,1,1  ;Card 4, Output 10
M7178->Y:$078D04,2,1  ;Card 4, Output 11
M7179->Y:$078D04,3,1  ;Card 4, Output 12
M7180->Y:$078D04,4,1  ;Card 4, Output 13
M7181->Y:$078D04,5,1  ;Card 4, Output 14
M7182->Y:$078D04,6,1  ;Card 4, Output 15
M7183->Y:$078D04,7,1  ;Card 4, Output 16
M7184->Y:$078D05,0,1  ;Card 4, Output 17
M7185->Y:$078D05,1,1  ;Card 4, Output 18
M7186->Y:$078D05,2,1  ;Card 4, Output 19
M7187->Y:$078D05,3,1  ;Card 4, Output 20
M7188->Y:$078D05,4,1  ;Card 4, Output 21
M7189->Y:$078D05,5,1  ;Card 4, Output 22
M7190->Y:$078D05,6,1  ;Card 4, Output 23
M7191->Y:$078D05,7,1  ;Card 4, Output 24

// Byte-wide variables used for power-on configuration
M3330->Y:$78D00,0,8,U          // I/O Card 4 I/O00-07 as byte
M3331->Y:$78D01,0,8,U          // I/O Card 4 I/O08-15 as byte
M3332->Y:$78D02,0,8,U          // I/O Card 4 I/O16-23 as byte
M3333->Y:$78D03,0,8,U          // I/O Card 4 I/O24-31 as byte
M3334->Y:$78D04,0,8,U          // I/O Card 4 I/O32-39 as byte
M3335->Y:$78D05,0,8,U          // I/O Card 4 I/O40-47 as byte
M3336->Y:$78D06,0,8,U          // I/O Card 4 latch inputs
M3337->Y:$78D07,0,8,U          // I/O Card 4 control register
```

Base Address $78D00, Middle Byte

```
// Single-bit variables used for accessing I/O points
M7192->Y:$078D00,8,1  ;Card 5, Input 1
M7193->Y:$078D00,9,1  ;Card 5, Input 2
M7194->Y:$078D00,10,1  ;Card 5, Input 3
M7195->Y:$078D00,11,1  ;Card 5, Input 4
M7196->Y:$078D00,12,1  ;Card 5, Input 5
M7197->Y:$078D00,13,1  ;Card 5, Input 6
M7198->Y:$078D00,14,1  ;Card 5, Input 7
M7199->Y:$078D00,15,1  ;Card 5, Input 8
M7200->Y:$078D01,8,1  ;Card 5, Input 9
M7201->Y:$078D01,9,1  ;Card 5, Input 10
M7202->Y:$078D01,10,1  ;Card 5, Input 11
M7203->Y:$078D01,11,1  ;Card 5, Input 12
M7204->Y:$078D01,12,1  ;Card 5, Input 13
M7205->Y:$078D01,13,1  ;Card 5, Input 14
M7206->Y:$078D01,14,1  ;Card 5, Input 15
M7207->Y:$078D01,15,1  ;Card 5, Input 16
M7208->Y:$078D02,8,1  ;Card 5, Input 17
M7209->Y:$078D02,9,1  ;Card 5, Input 18
M7210->Y:$078D02,10,1  ;Card 5, Input 19
M7211->Y:$078D02,11,1  ;Card 5, Input 20
M7212->Y:$078D02,12,1  ;Card 5, Input 21
M7213->Y:$078D02,13,1  ;Card 5, Input 22
M7214->Y:$078D02,14,1  ;Card 5, Input 23
M7215->Y:$078D02,15,1  ;Card 5, Input 24
M7216->Y:$078D03,8,1  ;Card 5, Output 1
M7217->Y:$078D03,9,1  ;Card 5, Output 2
M7218->Y:$078D03,10,1  ;Card 5, Output 3
M7219->Y:$078D03,11,1  ;Card 5, Output 4
M7220->Y:$078D03,12,1  ;Card 5, Output 5
M7221->Y:$078D03,13,1  ;Card 5, Output 6
M7222->Y:$078D03,14,1  ;Card 5, Output 7
M7223->Y:$078D03,15,1  ;Card 5, Output 8
M7224->Y:$078D04,8,1  ;Card 5, Output 9
M7225->Y:$078D04,9,1  ;Card 5, Output 10
M7226->Y:$078D04,10,1  ;Card 5, Output 11
M7227->Y:$078D04,11,1  ;Card 5, Output 12
M7228->Y:$078D04,12,1  ;Card 5, Output 13
M7229->Y:$078D04,13,1  ;Card 5, Output 14
M7230->Y:$078D04,14,1  ;Card 5, Output 15
M7231->Y:$078D04,15,1  ;Card 5, Output 16
M7232->Y:$078D05,8,1  ;Card 5, Output 17
M7233->Y:$078D05,9,1  ;Card 5, Output 18
M7234->Y:$078D05,10,1  ;Card 5, Output 19
M7235->Y:$078D05,11,1  ;Card 5, Output 20
M7236->Y:$078D05,12,1  ;Card 5, Output 21
M7237->Y:$078D05,13,1  ;Card 5, Output 22
M7238->Y:$078D05,14,1  ;Card 5, Output 23
M7239->Y:$078D05,15,1  ;Card 5, Output 24

// Byte-wide variables used for power-on configuration
M3340->Y:$78D00,8,8,U         // I/O Card 5 I/O00-07 as byte
M3341->Y:$78D01,8,8,U         // I/O Card 5 I/O08-15 as byte
M3342->Y:$78D02,8,8,U         // I/O Card 5 I/O16-23 as byte
M3343->Y:$78D03,8,8,U         // I/O Card 5 I/O24-31 as byte
M3344->Y:$78D04,8,8,U         // I/O Card 5 I/O32-39 as byte
M3345->Y:$78D05,8,8,U         // I/O Card 5 I/O40-47 as byte
M3346->Y:$78D06,8,8,U         // I/O Card 5 latch inputs
M3347->Y:$78D07,8,8,U         // I/O Card 5 control register
```

Base Address $78D00, High Byte

```
// Single-bit variables used for accessing I/O points
M7240->Y:$078D00,16,1  ;Card 6, Input 1
M7241->Y:$078D00,17,1  ;Card 6, Input 2
M7242->Y:$078D00,18,1  ;Card 6, Input 3
M7243->Y:$078D00,19,1  ;Card 6, Input 4
M7244->Y:$078D00,20,1  ;Card 6, Input 5
M7245->Y:$078D00,21,1  ;Card 6, Input 6
M7246->Y:$078D00,22,1  ;Card 6, Input 7
M7247->Y:$078D00,23,1  ;Card 6, Input 8
M7248->Y:$078D01,16,1  ;Card 6, Input 9
M7249->Y:$078D01,17,1  ;Card 6, Input 10
M7250->Y:$078D01,18,1  ;Card 6, Input 11
M7251->Y:$078D01,19,1  ;Card 6, Input 12
M7252->Y:$078D01,20,1  ;Card 6, Input 13
M7253->Y:$078D01,21,1  ;Card 6, Input 14
M7254->Y:$078D01,22,1  ;Card 6, Input 15
M7255->Y:$078D01,23,1  ;Card 6, Input 16
M7256->Y:$078D02,16,1  ;Card 6, Input 17
M7257->Y:$078D02,17,1  ;Card 6, Input 18
M7258->Y:$078D02,18,1  ;Card 6, Input 19
M7259->Y:$078D02,19,1  ;Card 6, Input 20
M7260->Y:$078D02,20,1  ;Card 6, Input 21
M7261->Y:$078D02,21,1  ;Card 6, Input 22
M7262->Y:$078D02,22,1  ;Card 6, Input 23
M7263->Y:$078D02,23,1  ;Card 6, Input 24
M7264->Y:$078D03,16,1  ;Card 6, Output 1
M7265->Y:$078D03,17,1  ;Card 6, Output 2
M7266->Y:$078D03,18,1  ;Card 6, Output 3
M7267->Y:$078D03,19,1  ;Card 6, Output 4
M7268->Y:$078D03,20,1  ;Card 6, Output 5
M7269->Y:$078D03,21,1  ;Card 6, Output 6
M7270->Y:$078D03,22,1  ;Card 6, Output 7
M7271->Y:$078D03,23,1  ;Card 6, Output 8
M7272->Y:$078D04,16,1  ;Card 6, Output 9
M7273->Y:$078D04,17,1  ;Card 6, Output 10
M7274->Y:$078D04,18,1  ;Card 6, Output 11
M7275->Y:$078D04,19,1  ;Card 6, Output 12
M7276->Y:$078D04,20,1  ;Card 6, Output 13
M7277->Y:$078D04,21,1  ;Card 6, Output 14
M7278->Y:$078D04,22,1  ;Card 6, Output 15
M7279->Y:$078D04,23,1  ;Card 6, Output 16
M7280->Y:$078D05,16,1  ;Card 6, Output 17
M7281->Y:$078D05,17,1  ;Card 6, Output 18
M7282->Y:$078D05,18,1  ;Card 6, Output 19
M7283->Y:$078D05,19,1  ;Card 6, Output 20
M7284->Y:$078D05,20,1  ;Card 6, Output 21
M7285->Y:$078D05,21,1  ;Card 6, Output 22
M7286->Y:$078D05,22,1  ;Card 6, Output 23
M7287->Y:$078D05,23,1  ;Card 6, Output 24

// Byte-wide variables used for power-on configuration
M3350->Y:$78D00,16,8,U         // I/O Card 6 I/O00-07 as byte
M3351->Y:$78D01,16,8,U         // I/O Card 6 I/O08-15 as byte
M3352->Y:$78D02,16,8,U         // I/O Card 6 I/O16-23 as byte
M3353->Y:$78D03,16,8,U         // I/O Card 6 I/O24-31 as byte
M3354->Y:$78D04,16,8,U         // I/O Card 6 I/O32-39 as byte
M3355->Y:$78D05,16,8,U         // I/O Card 6 I/O40-47 as byte
M3356->Y:$78D06,16,8,U         // I/O Card 6 latch inputs
M3357->Y:$78D07,16,8,U         // I/O Card 6 control register
```

Base Address $78E00, Low Byte

```
// Single-bit variables used for accessing I/O points
M7288->Y:$078E00,0,1  ;Card 7, Input 1
M7289->Y:$078E00,1,1  ;Card 7, Input 2
M7290->Y:$078E00,2,1  ;Card 7, Input 3
M7291->Y:$078E00,3,1  ;Card 7, Input 4
M7292->Y:$078E00,4,1  ;Card 7, Input 5
M7293->Y:$078E00,5,1  ;Card 7, Input 6
M7294->Y:$078E00,6,1  ;Card 7, Input 7
M7295->Y:$078E00,7,1  ;Card 7, Input 8
M7296->Y:$078E01,0,1  ;Card 7, Input 9
M7297->Y:$078E01,1,1  ;Card 7, Input 10
M7298->Y:$078E01,2,1  ;Card 7, Input 11
M7299->Y:$078E01,3,1  ;Card 7, Input 12
M7300->Y:$078E01,4,1  ;Card 7, Input 13
M7301->Y:$078E01,5,1  ;Card 7, Input 14
M7302->Y:$078E01,6,1  ;Card 7, Input 15
M7303->Y:$078E01,7,1  ;Card 7, Input 16
M7304->Y:$078E02,0,1  ;Card 7, Input 17
M7305->Y:$078E02,1,1  ;Card 7, Input 18
M7306->Y:$078E02,2,1  ;Card 7, Input 19
M7307->Y:$078E02,3,1  ;Card 7, Input 20
M7308->Y:$078E02,4,1  ;Card 7, Input 21
M7309->Y:$078E02,5,1  ;Card 7, Input 22
M7310->Y:$078E02,6,1  ;Card 7, Input 23
M7311->Y:$078E02,7,1  ;Card 7, Input 24
M7312->Y:$078E03,0,1  ;Card 7, Output 1
M7313->Y:$078E03,1,1  ;Card 7, Output 2
M7314->Y:$078E03,2,1  ;Card 7, Output 3
M7315->Y:$078E03,3,1  ;Card 7, Output 4
M7316->Y:$078E03,4,1  ;Card 7, Output 5
M7317->Y:$078E03,5,1  ;Card 7, Output 6
M7318->Y:$078E03,6,1  ;Card 7, Output 7
M7319->Y:$078E03,7,1  ;Card 7, Output 8
M7320->Y:$078E04,0,1  ;Card 7, Output 9
M7321->Y:$078E04,1,1  ;Card 7, Output 10
M7322->Y:$078E04,2,1  ;Card 7, Output 11
M7323->Y:$078E04,3,1  ;Card 7, Output 12
M7324->Y:$078E04,4,1  ;Card 7, Output 13
M7325->Y:$078E04,5,1  ;Card 7, Output 14
M7326->Y:$078E04,6,1  ;Card 7, Output 15
M7327->Y:$078E04,7,1  ;Card 7, Output 16
M7328->Y:$078E05,0,1  ;Card 7, Output 17
M7329->Y:$078E05,1,1  ;Card 7, Output 18
M7330->Y:$078E05,2,1  ;Card 7, Output 19
M7331->Y:$078E05,3,1  ;Card 7, Output 20
M7332->Y:$078E05,4,1  ;Card 7, Output 21
M7333->Y:$078E05,5,1  ;Card 7, Output 22
M7334->Y:$078E05,6,1  ;Card 7, Output 23
M7335->Y:$078E05,7,1  ;Card 7, Output 24

// Byte-wide variables used for power-on configuration
M3360->Y:$78E00,0,8,U          // I/O Card 7 I/O00-07 as byte
M3361->Y:$78E01,0,8,U          // I/O Card 7 I/O08-15 as byte
M3362->Y:$78E02,0,8,U          // I/O Card 7 I/O16-23 as byte
M3363->Y:$78E03,0,8,U          // I/O Card 7 I/O24-31 as byte
M3364->Y:$78E04,0,8,U          // I/O Card 7 I/O32-39 as byte
M3365->Y:$78E05,0,8,U          // I/O Card 7 I/O40-47 as byte
M3366->Y:$78E06,0,8,U          // I/O Card 7 latch inputs
M3367->Y:$78E07,0,8,U          // I/O Card 7 control register
```

Base Address $78E00, Middle Byte

```
// Single-bit variables used for accessing I/O points
M7336->Y:$078E00,8,1  ;Card 8, Input 1
M7337->Y:$078E00,9,1  ;Card 8, Input 2
M7338->Y:$078E00,10,1  ;Card 8, Input 3
M7339->Y:$078E00,11,1  ;Card 8, Input 4
M7340->Y:$078E00,12,1  ;Card 8, Input 5
M7341->Y:$078E00,13,1  ;Card 8, Input 6
M7342->Y:$078E00,14,1  ;Card 8, Input 7
M7343->Y:$078E00,15,1  ;Card 8, Input 8
M7344->Y:$078E01,8,1  ;Card 8, Input 9
M7345->Y:$078E01,9,1  ;Card 8, Input 10
M7346->Y:$078E01,10,1  ;Card 8, Input 11
M7347->Y:$078E01,11,1  ;Card 8, Input 12
M7348->Y:$078E01,12,1  ;Card 8, Input 13
M7349->Y:$078E01,13,1  ;Card 8, Input 14
M7350->Y:$078E01,14,1  ;Card 8, Input 15
M7351->Y:$078E01,15,1  ;Card 8, Input 16
M7352->Y:$078E02,8,1  ;Card 8, Input 17
M7353->Y:$078E02,9,1  ;Card 8, Input 18
M7354->Y:$078E02,10,1  ;Card 8, Input 19
M7355->Y:$078E02,11,1  ;Card 8, Input 20
M7356->Y:$078E02,12,1  ;Card 8, Input 21
M7357->Y:$078E02,13,1  ;Card 8, Input 22
M7358->Y:$078E02,14,1  ;Card 8, Input 23
M7359->Y:$078E02,15,1  ;Card 8, Input 24
M7360->Y:$078E03,8,1  ;Card 8, Output 1
M7361->Y:$078E03,9,1  ;Card 8, Output 2
M7362->Y:$078E03,10,1  ;Card 8, Output 3
M7363->Y:$078E03,11,1  ;Card 8, Output 4
M7364->Y:$078E03,12,1  ;Card 8, Output 5
M7365->Y:$078E03,13,1  ;Card 8, Output 6
M7366->Y:$078E03,14,1  ;Card 8, Output 7
M7367->Y:$078E03,15,1  ;Card 8, Output 8
M7368->Y:$078E04,8,1  ;Card 8, Output 9
M7369->Y:$078E04,9,1  ;Card 8, Output 10
M7370->Y:$078E04,10,1  ;Card 8, Output 11
M7371->Y:$078E04,11,1  ;Card 8, Output 12
M7372->Y:$078E04,12,1  ;Card 8, Output 13
M7373->Y:$078E04,13,1  ;Card 8, Output 14
M7374->Y:$078E04,14,1  ;Card 8, Output 15
M7375->Y:$078E04,15,1  ;Card 8, Output 16
M7376->Y:$078E05,8,1  ;Card 8, Output 17
M7377->Y:$078E05,9,1  ;Card 8, Output 18
M7378->Y:$078E05,10,1  ;Card 8, Output 19
M7379->Y:$078E05,11,1  ;Card 8, Output 20
M7380->Y:$078E05,12,1  ;Card 8, Output 21
M7381->Y:$078E05,13,1  ;Card 8, Output 22
M7382->Y:$078E05,14,1  ;Card 8, Output 23
M7383->Y:$078E05,15,1  ;Card 8, Output 24

// Byte-wide variables used for power-on configuration
M3370->Y:$78E00,8,8,U         // I/O Card 8 I/O00-07 as byte
M3371->Y:$78E01,8,8,U         // I/O Card 8 I/O08-15 as byte
M3372->Y:$78E02,8,8,U         // I/O Card 8 I/O16-23 as byte
M3373->Y:$78E03,8,8,U         // I/O Card 8 I/O24-31 as byte
M3374->Y:$78E04,8,8,U         // I/O Card 8 I/O32-39 as byte
M3375->Y:$78E05,8,8,U         // I/O Card 8 I/O40-47 as byte
M3376->Y:$78E06,8,8,U         // I/O Card 8 latch inputs
M3377->Y:$78E07,8,8,U         // I/O Card 8 control register
```

Base Address $78E00, High Byte

```
// Single-bit variables used for accessing I/O points
M7384->Y:$078E00,16,1  ;Card 9, Input 1
M7385->Y:$078E00,17,1  ;Card 9, Input 2
M7386->Y:$078E00,18,1  ;Card 9, Input 3
M7387->Y:$078E00,19,1  ;Card 9, Input 4
M7388->Y:$078E00,20,1  ;Card 9, Input 5
M7389->Y:$078E00,21,1  ;Card 9, Input 6
M7390->Y:$078E00,22,1  ;Card 9, Input 7
M7391->Y:$078E00,23,1  ;Card 9, Input 8
M7392->Y:$078E01,16,1  ;Card 9, Input 9
M7393->Y:$078E01,17,1  ;Card 9, Input 10
M7394->Y:$078E01,18,1  ;Card 9, Input 11
M7395->Y:$078E01,19,1  ;Card 9, Input 12
M7396->Y:$078E01,20,1  ;Card 9, Input 13
M7397->Y:$078E01,21,1  ;Card 9, Input 14
M7398->Y:$078E01,22,1  ;Card 9, Input 15
M7399->Y:$078E01,23,1  ;Card 9, Input 16
M7400->Y:$078E02,16,1  ;Card 9, Input 17
M7401->Y:$078E02,17,1  ;Card 9, Input 18
M7402->Y:$078E02,18,1  ;Card 9, Input 19
M7403->Y:$078E02,19,1  ;Card 9, Input 20
M7404->Y:$078E02,20,1  ;Card 9, Input 21
M7405->Y:$078E02,21,1  ;Card 9, Input 22
M7406->Y:$078E02,22,1  ;Card 9, Input 23
M7407->Y:$078E02,23,1  ;Card 9, Input 24
M7408->Y:$078E03,16,1  ;Card 9, Output 1
M7409->Y:$078E03,17,1  ;Card 9, Output 2
M7410->Y:$078E03,18,1  ;Card 9, Output 3
M7411->Y:$078E03,19,1  ;Card 9, Output 4
M7412->Y:$078E03,20,1  ;Card 9, Output 5
M7413->Y:$078E03,21,1  ;Card 9, Output 6
M7414->Y:$078E03,22,1  ;Card 9, Output 7
M7415->Y:$078E03,23,1  ;Card 9, Output 8
M7416->Y:$078E04,16,1  ;Card 9, Output 9
M7417->Y:$078E04,17,1  ;Card 9, Output 10
M7418->Y:$078E04,18,1  ;Card 9, Output 11
M7419->Y:$078E04,19,1  ;Card 9, Output 12
M7420->Y:$078E04,20,1  ;Card 9, Output 13
M7421->Y:$078E04,21,1  ;Card 9, Output 14
M7422->Y:$078E04,22,1  ;Card 9, Output 15
M7423->Y:$078E04,23,1  ;Card 9, Output 16
M7424->Y:$078E05,16,1  ;Card 9, Output 17
M7425->Y:$078E05,17,1  ;Card 9, Output 18
M7426->Y:$078E05,18,1  ;Card 9, Output 19
M7427->Y:$078E05,19,1  ;Card 9, Output 20
M7428->Y:$078E05,20,1  ;Card 9, Output 21
M7429->Y:$078E05,21,1  ;Card 9, Output 22
M7430->Y:$078E05,22,1  ;Card 9, Output 23
M7431->Y:$078E05,23,1  ;Card 9, Output 24

// Byte-wide variables used for power-on configuration
M3380->Y:$78E00,16,8,U         // I/O Card 9 I/O00-07 as byte
M3381->Y:$78E01,16,8,U         // I/O Card 9 I/O08-15 as byte
M3382->Y:$78E02,16,8,U         // I/O Card 9 I/O16-23 as byte
M3383->Y:$78E03,16,8,U         // I/O Card 9 I/O24-31 as byte
M3384->Y:$78E04,16,8,U         // I/O Card 9 I/O32-39 as byte
M3385->Y:$78E05,16,8,U         // I/O Card 9 I/O40-47 as byte
M3386->Y:$78E06,16,8,U         // I/O Card 9 latch inputs
M3387->Y:$78E07,16,8,U         // I/O Card 9 control register
```

Base Address $78F00, Low Byte

```
// Single-bit variables used for accessing I/O points
M7432->Y:$078F00,0,1  ;Card 10, Input 1
M7433->Y:$078F00,1,1  ;Card 10, Input 2
M7434->Y:$078F00,2,1  ;Card 10, Input 3
M7435->Y:$078F00,3,1  ;Card 10, Input 4
M7436->Y:$078F00,4,1  ;Card 10, Input 5
M7437->Y:$078F00,5,1  ;Card 10, Input 6
M7438->Y:$078F00,6,1  ;Card 10, Input 7
M7439->Y:$078F00,7,1  ;Card 10, Input 8
M7440->Y:$078F01,0,1  ;Card 10, Input 9
M7441->Y:$078F01,1,1  ;Card 10, Input 10
M7442->Y:$078F01,2,1  ;Card 10, Input 11
M7443->Y:$078F01,3,1  ;Card 10, Input 12
M7444->Y:$078F01,4,1  ;Card 10, Input 13
M7445->Y:$078F01,5,1  ;Card 10, Input 14
M7446->Y:$078F01,6,1  ;Card 10, Input 15
M7447->Y:$078F01,7,1  ;Card 10, Input 16
M7448->Y:$078F02,0,1  ;Card 10, Input 17
M7449->Y:$078F02,1,1  ;Card 10, Input 18
M7450->Y:$078F02,2,1  ;Card 10, Input 19
M7451->Y:$078F02,3,1  ;Card 10, Input 20
M7452->Y:$078F02,4,1  ;Card 10, Input 21
M7453->Y:$078F02,5,1  ;Card 10, Input 22
M7454->Y:$078F02,6,1  ;Card 10, Input 23
M7455->Y:$078F02,7,1  ;Card 10, Input 24
M7456->Y:$078F03,0,1  ;Card 10, Output 1
M7457->Y:$078F03,1,1  ;Card 10, Output 2
M7458->Y:$078F03,2,1  ;Card 10, Output 3
M7459->Y:$078F03,3,1  ;Card 10, Output 4
M7460->Y:$078F03,4,1  ;Card 10, Output 5
M7461->Y:$078F03,5,1  ;Card 10, Output 6
M7462->Y:$078F03,6,1  ;Card 10, Output 7
M7463->Y:$078F03,7,1  ;Card 10, Output 8
M7464->Y:$078F04,0,1  ;Card 10, Output 9
M7465->Y:$078F04,1,1  ;Card 10, Output 10
M7466->Y:$078F04,2,1  ;Card 10, Output 11
M7467->Y:$078F04,3,1  ;Card 10, Output 12
M7468->Y:$078F04,4,1  ;Card 10, Output 13
M7469->Y:$078F04,5,1  ;Card 10, Output 14
M7470->Y:$078F04,6,1  ;Card 10, Output 15
M7471->Y:$078F04,7,1  ;Card 10, Output 16
M7472->Y:$078F05,0,1  ;Card 10, Output 17
M7473->Y:$078F05,1,1  ;Card 10, Output 18
M7474->Y:$078F05,2,1  ;Card 10, Output 19
M7475->Y:$078F05,3,1  ;Card 10, Output 20
M7476->Y:$078F05,4,1  ;Card 10, Output 21
M7477->Y:$078F05,5,1  ;Card 10, Output 22
M7478->Y:$078F05,6,1  ;Card 10, Output 23
M7479->Y:$078F05,7,1  ;Card 10, Output 24

// Byte-wide variables used for power-on configuration
M3390->Y:$78F00,0,8,U         // I/O Card 10 I/O00-07 as byte
M3391->Y:$78F01,0,8,U         // I/O Card 10 I/O08-15 as byte
M3392->Y:$78F02,0,8,U         // I/O Card 10 I/O16-23 as byte
M3393->Y:$78F03,0,8,U         // I/O Card 10 I/O24-31 as byte
M3394->Y:$78F04,0,8,U         // I/O Card 10 I/O32-39 as byte
M3395->Y:$78F05,0,8,U         // I/O Card 10 I/O40-47 as byte
M3396->Y:$78F06,0,8,U         // I/O Card 10 latch inputs
M3397->Y:$78F07,0,8,U         // I/O Card 10 control register
```

Base Address $78F00, Middle Byte

```
// Single-bit variables used for accessing I/O points
M7480->Y:$078F00,8,1  ;Card 11, Input 1
M7481->Y:$078F00,9,1  ;Card 11, Input 2
M7482->Y:$078F00,10,1  ;Card 11, Input 3
M7483->Y:$078F00,11,1  ;Card 11, Input 4
M7484->Y:$078F00,12,1  ;Card 11, Input 5
M7485->Y:$078F00,13,1  ;Card 11, Input 6
M7486->Y:$078F00,14,1  ;Card 11, Input 7
M7487->Y:$078F00,15,1  ;Card 11, Input 8
M7488->Y:$078F01,8,1  ;Card 11, Input 9
M7489->Y:$078F01,9,1  ;Card 11, Input 10
M7490->Y:$078F01,10,1  ;Card 11, Input 11
M7491->Y:$078F01,11,1  ;Card 11, Input 12
M7492->Y:$078F01,12,1  ;Card 11, Input 13
M7493->Y:$078F01,13,1  ;Card 11, Input 14
M7494->Y:$078F01,14,1  ;Card 11, Input 15
M7495->Y:$078F01,15,1  ;Card 11, Input 16
M7496->Y:$078F02,8,1  ;Card 11, Input 17
M7497->Y:$078F02,9,1  ;Card 11, Input 18
M7498->Y:$078F02,10,1  ;Card 11, Input 19
M7499->Y:$078F02,11,1  ;Card 11, Input 20
M7500->Y:$078F02,12,1  ;Card 11, Input 21
M7501->Y:$078F02,13,1  ;Card 11, Input 22
M7502->Y:$078F02,14,1  ;Card 11, Input 23
M7503->Y:$078F02,15,1  ;Card 11, Input 24
M7504->Y:$078F03,8,1  ;Card 11, Output 1
M7505->Y:$078F03,9,1  ;Card 11, Output 2
M7506->Y:$078F03,10,1  ;Card 11, Output 3
M7507->Y:$078F03,11,1  ;Card 11, Output 4
M7508->Y:$078F03,12,1  ;Card 11, Output 5
M7509->Y:$078F03,13,1  ;Card 11, Output 6
M7510->Y:$078F03,14,1  ;Card 11, Output 7
M7511->Y:$078F03,15,1  ;Card 11, Output 8
M7512->Y:$078F04,8,1  ;Card 11, Output 9
M7513->Y:$078F04,9,1  ;Card 11, Output 10
M7514->Y:$078F04,10,1  ;Card 11, Output 11
M7515->Y:$078F04,11,1  ;Card 11, Output 12
M7516->Y:$078F04,12,1  ;Card 11, Output 13
M7517->Y:$078F04,13,1  ;Card 11, Output 14
M7518->Y:$078F04,14,1  ;Card 11, Output 15
M7519->Y:$078F04,15,1  ;Card 11, Output 16
M7520->Y:$078F05,8,1  ;Card 11, Output 17
M7521->Y:$078F05,9,1  ;Card 11, Output 18
M7522->Y:$078F05,10,1  ;Card 11, Output 19
M7523->Y:$078F05,11,1  ;Card 11, Output 20
M7524->Y:$078F05,12,1  ;Card 11, Output 21
M7525->Y:$078F05,13,1  ;Card 11, Output 22
M7526->Y:$078F05,14,1  ;Card 11, Output 23
M7527->Y:$078F05,15,1  ;Card 11, Output 24

// Byte-wide variables used for power-on configuration
M3400->Y:$78F00,8,8,U         // I/O Card 11 I/O00-07 as byte
M3401->Y:$78F01,8,8,U         // I/O Card 11 I/O08-15 as byte
M3402->Y:$78F02,8,8,U         // I/O Card 11 I/O16-23 as byte
M3403->Y:$78F03,8,8,U         // I/O Card 11 I/O24-31 as byte
M3404->Y:$78F04,8,8,U         // I/O Card 11 I/O32-39 as byte
M3405->Y:$78F05,8,8,U         // I/O Card 11 I/O40-47 as byte
M3406->Y:$78F06,8,8,U         // I/O Card 11 latch inputs
M3407->Y:$78F07,8,8,U         // I/O Card 11 control register
```

Base Address $78F00, High Byte

```
// Single-bit variables used for accessing I/O points
M7528->Y:$078F00,16,1  ;Card 12, Input 1
M7529->Y:$078F00,17,1  ;Card 12, Input 2
M7530->Y:$078F00,18,1  ;Card 12, Input 3
M7531->Y:$078F00,19,1  ;Card 12, Input 4
M7532->Y:$078F00,20,1  ;Card 12, Input 5
M7533->Y:$078F00,21,1  ;Card 12, Input 6
M7534->Y:$078F00,22,1  ;Card 12, Input 7
M7535->Y:$078F00,23,1  ;Card 12, Input 8
M7536->Y:$078F01,16,1  ;Card 12, Input 9
M7537->Y:$078F01,17,1  ;Card 12, Input 10
M7538->Y:$078F01,18,1  ;Card 12, Input 11
M7539->Y:$078F01,19,1  ;Card 12, Input 12
M7540->Y:$078F01,20,1  ;Card 12, Input 13
M7541->Y:$078F01,21,1  ;Card 12, Input 14
M7542->Y:$078F01,22,1  ;Card 12, Input 15
M7543->Y:$078F01,23,1  ;Card 12, Input 16
M7544->Y:$078F02,16,1  ;Card 12, Input 17
M7545->Y:$078F02,17,1  ;Card 12, Input 18
M7546->Y:$078F02,18,1  ;Card 12, Input 19
M7547->Y:$078F02,19,1  ;Card 12, Input 20
M7548->Y:$078F02,20,1  ;Card 12, Input 21
M7549->Y:$078F02,21,1  ;Card 12, Input 22
M7550->Y:$078F02,22,1  ;Card 12, Input 23
M7551->Y:$078F02,23,1  ;Card 12, Input 24
M7552->Y:$078F00,16,1  ;Card 12, Output 1
M7553->Y:$078F00,17,1  ;Card 12, Output 2
M7554->Y:$078F00,18,1  ;Card 12, Output 3
M7555->Y:$078F00,19,1  ;Card 12, Output 4
M7556->Y:$078F00,20,1  ;Card 12, Output 5
M7557->Y:$078F00,21,1  ;Card 12, Output 6
M7558->Y:$078F00,22,1  ;Card 12, Output 7
M7559->Y:$078F00,23,1  ;Card 12, Output 8
M7560->Y:$078F01,16,1  ;Card 12, Output 9
M7561->Y:$078F01,17,1  ;Card 12, Output 10
M7562->Y:$078F01,18,1  ;Card 12, Output 11
M7563->Y:$078F01,19,1  ;Card 12, Output 12
M7564->Y:$078F01,20,1  ;Card 12, Output 13
M7565->Y:$078F01,21,1  ;Card 12, Output 14
M7566->Y:$078F01,22,1  ;Card 12, Output 15
M7567->Y:$078F01,23,1  ;Card 12, Output 16
M7568->Y:$078F02,16,1  ;Card 12, Output 17
M7569->Y:$078F02,17,1  ;Card 12, Output 18
M7570->Y:$078F02,18,1  ;Card 12, Output 19
M7571->Y:$078F02,19,1  ;Card 12, Output 20
M7572->Y:$078F02,20,1  ;Card 12, Output 21
M7573->Y:$078F02,21,1  ;Card 12, Output 22
M7574->Y:$078F02,22,1  ;Card 12, Output 23
M7575->Y:$078F02,23,1  ;Card 12, Output 24

// Byte-wide variables used for power-on configuration
M3410->Y:$78F00,16,8,U         // I/O Card 12 I/O00-07 as byte
M3411->Y:$78F01,16,8,U         // I/O Card 12 I/O08-15 as byte
M3412->Y:$78F02,16,8,U         // I/O Card 12 I/O16-23 as byte
M3413->Y:$78F03,16,8,U         // I/O Card 12 I/O24-31 as byte
M3414->Y:$78F04,16,8,U         // I/O Card 12 I/O32-39 as byte
M3415->Y:$78F05,16,8,U         // I/O Card 12 I/O40-47 as byte
M3416->Y:$78F06,16,8,U         // I/O Card 12 latch inputs
M3417->Y:$78F07,16,8,U         // I/O Card 12 control registe
```

APPENDIX C: FULL POWER UMAC M-VARIABLE MAPPINGS

This appendix provides suggested M-Variables for all twelve possible ACC-11E addressing settings.

Base Offset $A00000, Low Byte

```
// Single-bit variables used for accessing I/O points
ptr IoCard1Pt00->u.io:$A00000.8.1     // I/O Card 1 Input 00
ptr IoCard1Pt01->u.io:$A00000.9.1     // I/O Card 1 Input 01
ptr IoCard1Pt02->u.io:$A00000.10.1    // I/O Card 1 Input 02
ptr IoCard1Pt03->u.io:$A00000.11.1    // I/O Card 1 Input 03
ptr IoCard1Pt04->u.io:$A00000.12.1    // I/O Card 1 Input 04
ptr IoCard1Pt05->u.io:$A00000.13.1    // I/O Card 1 Input 05
ptr IoCard1Pt06->u.io:$A00000.14.1    // I/O Card 1 Input 06
ptr IoCard1Pt07->u.io:$A00000.15.1    // I/O Card 1 Input 07
ptr IoCard1Pt08->u.io:$A00004.8.1     // I/O Card 1 Input 08
ptr IoCard1Pt09->u.io:$A00004.9.1     // I/O Card 1 Input 09
ptr IoCard1Pt10->u.io:$A00004.10.1    // I/O Card 1 Input 10
ptr IoCard1Pt11->u.io:$A00004.11.1    // I/O Card 1 Input 11
ptr IoCard1Pt12->u.io:$A00004.12.1    // I/O Card 1 Input 12
ptr IoCard1Pt13->u.io:$A00004.13.1    // I/O Card 1 Input 13
ptr IoCard1Pt14->u.io:$A00004.14.1    // I/O Card 1 Input 14
ptr IoCard1Pt15->u.io:$A00004.15.1    // I/O Card 1 Input 15
ptr IoCard1Pt16->u.io:$A00008.8.1     // I/O Card 1 Input 16
ptr IoCard1Pt17->u.io:$A00008.9.1     // I/O Card 1 Input 17
ptr IoCard1Pt18->u.io:$A00008.10.1    // I/O Card 1 Input 18
ptr IoCard1Pt19->u.io:$A00008.11.1    // I/O Card 1 Input 19
ptr IoCard1Pt20->u.io:$A00008.12.1    // I/O Card 1 Input 20
ptr IoCard1Pt21->u.io:$A00008.13.1    // I/O Card 1 Input 21
ptr IoCard1Pt22->u.io:$A00008.14.1    // I/O Card 1 Input 22
ptr IoCard1Pt23->u.io:$A00008.15.1    // I/O Card 1 Input 23
ptr IoCard1Pt24->u.io:$A0000C.8.1     // I/O Card 1 Output 00
ptr IoCard1Pt25->u.io:$A0000C.9.1     // I/O Card 1 Output 01
ptr IoCard1Pt26->u.io:$A0000C.10.1    // I/O Card 1 Output 02
ptr IoCard1Pt27->u.io:$A0000C.11.1    // I/O Card 1 Output 03
ptr IoCard1Pt28->u.io:$A0000C.12.1    // I/O Card 1 Output 04
ptr IoCard1Pt29->u.io:$A0000C.13.1    // I/O Card 1 Output 05
ptr IoCard1Pt30->u.io:$A0000C.14.1    // I/O Card 1 Output 06
ptr IoCard1Pt31->u.io:$A0000C.15.1    // I/O Card 1 Output 07
ptr IoCard1Pt32->u.io:$A00010.8.1     // I/O Card 1 Output 08
ptr IoCard1Pt33->u.io:$A00010.9.1     // I/O Card 1 Output 09
ptr IoCard1Pt34->u.io:$A00010.10.1    // I/O Card 1 Output 10
ptr IoCard1Pt35->u.io:$A00010.11.1    // I/O Card 1 Output 11
ptr IoCard1Pt36->u.io:$A00010.12.1    // I/O Card 1 Output 12
ptr IoCard1Pt37->u.io:$A00010.13.1    // I/O Card 1 Output 13
ptr IoCard1Pt38->u.io:$A00010.14.1    // I/O Card 1 Output 14
ptr IoCard1Pt39->u.io:$A00010.15.1    // I/O Card 1 Output 15
ptr IoCard1Pt40->u.io:$A00014.8.1     // I/O Card 1 Output 16
ptr IoCard1Pt41->u.io:$A00014.9.1     // I/O Card 1 Output 17
ptr IoCard1Pt42->u.io:$A00014.10.1    // I/O Card 1 Output 18
ptr IoCard1Pt43->u.io:$A00014.11.1    // I/O Card 1 Output 19
ptr IoCard1Pt44->u.io:$A00014.12.1    // I/O Card 1 Output 20
ptr IoCard1Pt45->u.io:$A00014.13.1    // I/O Card 1 Output 21
ptr IoCard1Pt46->u.io:$A00014.14.1    // I/O Card 1 Output 22
ptr IoCard1Pt47->u.io:$A00014.15.1    // I/O Card 1 Output 23

// Byte-wide variables used for power-on configuration
ptr IoCard1Reg0->u.io:$A00000.8.8     // I/O Card 1 Inputs 00-07 as byte
ptr IoCard1Reg1->u.io:$A00004.8.8     // I/O Card 1 Inputs 08-15 as byte
ptr IoCard1Reg2->u.io:$A00008.8.8     // I/O Card 1 Inputs 16-23 as byte
ptr IoCard1Reg3->u.io:$A0000C.8.8     // I/O Card 1 Outputs 00-07 as byte
ptr IoCard1Reg4->u.io:$A00010.8.8     // I/O Card 1 Outputs 08-15 as byte
ptr IoCard1Reg5->u.io:$A00014.8.8     // I/O Card 1 Outputs 16-23 as byte
ptr IoCard1Reg6->u.io:$A00018.8.8     // I/O Card 1 latch inputs
ptr IoCard1Reg7->u.io:$A0001C.8.8     // I/O Card 1 control register
```

Base Offset $A00000, Middle Byte

```
// Single-bit variables used for accessing I/O points
ptr IoCard2Pt00->u.io:$A00000.16.1    // I/O Card 2 I/O00
ptr IoCard2Pt01->u.io:$A00000.17.1    // I/O Card 2 I/O01
ptr IoCard2Pt02->u.io:$A00000.18.1    // I/O Card 2 I/O02
ptr IoCard2Pt03->u.io:$A00000.19.1    // I/O Card 2 I/O03
ptr IoCard2Pt04->u.io:$A00000.20.1    // I/O Card 2 I/O04
ptr IoCard2Pt05->u.io:$A00000.21.1    // I/O Card 2 I/O05
ptr IoCard2Pt06->u.io:$A00000.22.1    // I/O Card 2 I/O06
ptr IoCard2Pt07->u.io:$A00000.23.1    // I/O Card 2 I/O07
ptr IoCard2Pt08->u.io:$A00004.16.1    // I/O Card 2 I/O08
ptr IoCard2Pt09->u.io:$A00004.17.1    // I/O Card 2 I/O09
ptr IoCard2Pt10->u.io:$A00004.18.1    // I/O Card 2 I/O10
ptr IoCard2Pt11->u.io:$A00004.19.1    // I/O Card 2 I/O11
ptr IoCard2Pt12->u.io:$A00004.20.1    // I/O Card 2 I/O12
ptr IoCard2Pt13->u.io:$A00004.21.1    // I/O Card 2 I/O13
ptr IoCard2Pt14->u.io:$A00004.22.1    // I/O Card 2 I/O14
ptr IoCard2Pt15->u.io:$A00004.23.1    // I/O Card 2 I/O15
ptr IoCard2Pt16->u.io:$A00008.16.1    // I/O Card 2 I/O16
ptr IoCard2Pt17->u.io:$A00008.17.1    // I/O Card 2 I/O17
ptr IoCard2Pt18->u.io:$A00008.18.1    // I/O Card 2 I/O18
ptr IoCard2Pt19->u.io:$A00008.19.1    // I/O Card 2 I/O19
ptr IoCard2Pt20->u.io:$A00008.20.1    // I/O Card 2 I/O20
ptr IoCard2Pt21->u.io:$A00008.21.1    // I/O Card 2 I/O21
ptr IoCard2Pt22->u.io:$A00008.22.1    // I/O Card 2 I/O22
ptr IoCard2Pt23->u.io:$A00008.23.1    // I/O Card 2 I/O23
ptr IoCard2Pt24->u.io:$A0000C.16.1    // I/O Card 2 I/O24
ptr IoCard2Pt25->u.io:$A0000C.17.1    // I/O Card 2 I/O25
ptr IoCard2Pt26->u.io:$A0000C.18.1    // I/O Card 2 I/O26
ptr IoCard2Pt27->u.io:$A0000C.19.1    // I/O Card 2 I/O27
ptr IoCard2Pt28->u.io:$A0000C.20.1    // I/O Card 2 I/O28
ptr IoCard2Pt29->u.io:$A0000C.21.1    // I/O Card 2 I/O29
ptr IoCard2Pt30->u.io:$A0000C.22.1    // I/O Card 2 I/O30
ptr IoCard2Pt31->u.io:$A0000C.23.1    // I/O Card 2 I/O31
ptr IoCard2Pt32->u.io:$A00010.16.1    // I/O Card 2 I/O32
ptr IoCard2Pt33->u.io:$A00010.17.1    // I/O Card 2 I/O33
ptr IoCard2Pt34->u.io:$A00010.18.1    // I/O Card 2 I/O34
ptr IoCard2Pt35->u.io:$A00010.19.1    // I/O Card 2 I/O35
ptr IoCard2Pt36->u.io:$A00010.20.1    // I/O Card 2 I/O36
ptr IoCard2Pt37->u.io:$A00010.21.1    // I/O Card 2 I/O37
ptr IoCard2Pt38->u.io:$A00010.22.1    // I/O Card 2 I/O38
ptr IoCard2Pt39->u.io:$A00010.23.1    // I/O Card 2 I/O39
ptr IoCard2Pt40->u.io:$A00014.16.1    // I/O Card 2 I/O40
ptr IoCard2Pt41->u.io:$A00014.17.1    // I/O Card 2 I/O41
ptr IoCard2Pt42->u.io:$A00014.18.1    // I/O Card 2 I/O42
ptr IoCard2Pt43->u.io:$A00014.19.1    // I/O Card 2 I/O43
ptr IoCard2Pt44->u.io:$A00014.20.1    // I/O Card 2 I/O44
ptr IoCard2Pt45->u.io:$A00014.21.1    // I/O Card 2 I/O45
ptr IoCard2Pt46->u.io:$A00014.22.1    // I/O Card 2 I/O46
ptr IoCard2Pt47->u.io:$A00014.23.1    // I/O Card 2 I/O47

// Byte-wide variables used for power-on configuration
ptr IoCard2Reg0->u.io:$A00000.16.8    // I/O Card 2 I/O00-07 as byte
ptr IoCard2Reg1->u.io:$A00004.16.8    // I/O Card 2 I/O08-15 as byte
ptr IoCard2Reg2->u.io:$A00008.16.8    // I/O Card 2 I/O16-23 as byte
ptr IoCard2Reg3->u.io:$A0000C.16.8    // I/O Card 2 I/O24-31 as byte
ptr IoCard2Reg4->u.io:$A00010.16.8    // I/O Card 2 I/O32-39 as byte
ptr IoCard2Reg5->u.io:$A00014.16.8    // I/O Card 2 I/O40-47 as byte
ptr IoCard2Reg6->u.io:$A00018.16.8    // I/O Card 2 latch inputs
ptr IoCard2Reg7->u.io:$A0001C.16.8    // I/O Card 2 control register
```

Base offset $A00000, High Byte

```
// Single-bit variables used for accessing I/O points
ptr IoCard3Pt00->u.io:$A00000.24.1    // I/O Card 3 I/O00
ptr IoCard3Pt01->u.io:$A00000.25.1    // I/O Card 3 I/O01
ptr IoCard3Pt02->u.io:$A00000.26.1    // I/O Card 3 I/O02
ptr IoCard3Pt03->u.io:$A00000.27.1    // I/O Card 3 I/O03
ptr IoCard3Pt04->u.io:$A00000.28.1    // I/O Card 3 I/O04
ptr IoCard3Pt05->u.io:$A00000.29.1    // I/O Card 3 I/O05
ptr IoCard3Pt06->u.io:$A00000.30.1    // I/O Card 3 I/O06
ptr IoCard3Pt07->u.io:$A00000.31.1    // I/O Card 3 I/O07
ptr IoCard3Pt08->u.io:$A00004.24.1    // I/O Card 3 I/O08
ptr IoCard3Pt09->u.io:$A00004.25.1    // I/O Card 3 I/O09
ptr IoCard3Pt10->u.io:$A00004.26.1    // I/O Card 3 I/O10
ptr IoCard3Pt11->u.io:$A00004.27.1    // I/O Card 3 I/O11
ptr IoCard3Pt12->u.io:$A00004.28.1    // I/O Card 3 I/O12
ptr IoCard3Pt13->u.io:$A00004.29.1    // I/O Card 3 I/O13
ptr IoCard3Pt14->u.io:$A00004.30.1    // I/O Card 3 I/O14
ptr IoCard3Pt15->u.io:$A00004.31.1    // I/O Card 3 I/O15
ptr IoCard3Pt16->u.io:$A00008.24.1    // I/O Card 3 I/O16
ptr IoCard3Pt17->u.io:$A00008.25.1    // I/O Card 3 I/O17
ptr IoCard3Pt18->u.io:$A00008.26.1    // I/O Card 3 I/O18
ptr IoCard3Pt19->u.io:$A00008.27.1    // I/O Card 3 I/O19
ptr IoCard3Pt20->u.io:$A00008.28.1    // I/O Card 3 I/O20
ptr IoCard3Pt21->u.io:$A00008.29.1    // I/O Card 3 I/O21
ptr IoCard3Pt22->u.io:$A00008.30.1    // I/O Card 3 I/O22
ptr IoCard3Pt23->u.io:$A00008.31.1    // I/O Card 3 I/O23
ptr IoCard3Pt24->u.io:$A0000C.24.1    // I/O Card 3 I/O24
ptr IoCard3Pt25->u.io:$A0000C.25.1    // I/O Card 3 I/O25
ptr IoCard3Pt26->u.io:$A0000C.26.1    // I/O Card 3 I/O26
ptr IoCard3Pt27->u.io:$A0000C.27.1    // I/O Card 3 I/O27
ptr IoCard3Pt28->u.io:$A0000C.28.1    // I/O Card 3 I/O28
ptr IoCard3Pt29->u.io:$A0000C.29.1    // I/O Card 3 I/O29
ptr IoCard3Pt30->u.io:$A0000C.30.1    // I/O Card 3 I/O30
ptr IoCard3Pt31->u.io:$A0000C.31.1    // I/O Card 3 I/O31
ptr IoCard3Pt32->u.io:$A00010.24.1    // I/O Card 3 I/O32
ptr IoCard3Pt33->u.io:$A00010.25.1    // I/O Card 3 I/O33
ptr IoCard3Pt34->u.io:$A00010.26.1    // I/O Card 3 I/O34
ptr IoCard3Pt35->u.io:$A00010.27.1    // I/O Card 3 I/O35
ptr IoCard3Pt36->u.io:$A00010.28.1    // I/O Card 3 I/O36
ptr IoCard3Pt37->u.io:$A00010.29.1    // I/O Card 3 I/O37
ptr IoCard3Pt38->u.io:$A00010.30.1    // I/O Card 3 I/O38
ptr IoCard3Pt39->u.io:$A00010.31.1    // I/O Card 3 I/O39
ptr IoCard3Pt40->u.io:$A00014.24.1    // I/O Card 3 I/O40
ptr IoCard3Pt41->u.io:$A00014.25.1    // I/O Card 3 I/O41
ptr IoCard3Pt42->u.io:$A00014.26.1    // I/O Card 3 I/O42
ptr IoCard3Pt43->u.io:$A00014.27.1    // I/O Card 3 I/O43
ptr IoCard3Pt44->u.io:$A00014.28.1    // I/O Card 3 I/O44
ptr IoCard3Pt45->u.io:$A00014.29.1    // I/O Card 3 I/O45
ptr IoCard3Pt46->u.io:$A00014.30.1    // I/O Card 3 I/O46
ptr IoCard3Pt47->u.io:$A00014.31.1    // I/O Card 3 I/O47

// Byte-wide variables used for power-on configuration
ptr IoCard3Reg0->u.io:$A00000.24.8    // I/O Card 3 I/O00-07 as byte
ptr IoCard3Reg1->u.io:$A00004.24.8    // I/O Card 3 I/O08-15 as byte
ptr IoCard3Reg2->u.io:$A00008.24.8    // I/O Card 3 I/O16-23 as byte
ptr IoCard3Reg3->u.io:$A0000C.24.8    // I/O Card 3 I/O24-31 as byte
ptr IoCard3Reg4->u.io:$A00010.24.8    // I/O Card 3 I/O32-39 as byte
ptr IoCard3Reg5->u.io:$A00014.24.8    // I/O Card 3 I/O40-47 as byte
ptr IoCard3Reg6->u.io:$A00018.24.8    // I/O Card 3 latch inputs
ptr IoCard3Reg7->u.io:$A0001C.24.8    // I/O Card 3 control register
```

Base Offset $B00000, Low Byte

```
// Single-bit variables used for accessing I/O points
ptr IoCard4Pt00->u.io:$B00000.8.1     // I/O Card 4 I/O00
ptr IoCard4Pt01->u.io:$B00000.9.1     // I/O Card 4 I/O01
ptr IoCard4Pt02->u.io:$B00000.10.1    // I/O Card 4 I/O02
ptr IoCard4Pt03->u.io:$B00000.11.1    // I/O Card 4 I/O03
ptr IoCard4Pt04->u.io:$B00000.12.1    // I/O Card 4 I/O04
ptr IoCard4Pt05->u.io:$B00000.13.1    // I/O Card 4 I/O05
ptr IoCard4Pt06->u.io:$B00000.14.1    // I/O Card 4 I/O06
ptr IoCard4Pt07->u.io:$B00000.15.1    // I/O Card 4 I/O07
ptr IoCard4Pt08->u.io:$B00004.8.1     // I/O Card 4 I/O08
ptr IoCard4Pt09->u.io:$B00004.9.1     // I/O Card 4 I/O09
ptr IoCard4Pt10->u.io:$B00004.10.1    // I/O Card 4 I/O10
ptr IoCard4Pt11->u.io:$B00004.11.1    // I/O Card 4 I/O11
ptr IoCard4Pt12->u.io:$B00004.12.1    // I/O Card 4 I/O12
ptr IoCard4Pt13->u.io:$B00004.13.1    // I/O Card 4 I/O13
ptr IoCard4Pt14->u.io:$B00004.14.1    // I/O Card 4 I/O14
ptr IoCard4Pt15->u.io:$B00004.15.1    // I/O Card 4 I/O15
ptr IoCard4Pt16->u.io:$B00008.8.1     // I/O Card 4 I/O16
ptr IoCard4Pt17->u.io:$B00008.9.1     // I/O Card 4 I/O17
ptr IoCard4Pt18->u.io:$B00008.10.1    // I/O Card 4 I/O18
ptr IoCard4Pt19->u.io:$B00008.11.1    // I/O Card 4 I/O19
ptr IoCard4Pt20->u.io:$B00008.12.1    // I/O Card 4 I/O20
ptr IoCard4Pt21->u.io:$B00008.13.1    // I/O Card 4 I/O21
ptr IoCard4Pt22->u.io:$B00008.14.1    // I/O Card 4 I/O22
ptr IoCard4Pt23->u.io:$B00008.15.1    // I/O Card 4 I/O23
ptr IoCard4Pt24->u.io:$B0000C.8.1     // I/O Card 4 I/O24
ptr IoCard4Pt25->u.io:$B0000C.9.1     // I/O Card 4 I/O25
ptr IoCard4Pt26->u.io:$B0000C.10.1    // I/O Card 4 I/O26
ptr IoCard4Pt27->u.io:$B0000C.11.1    // I/O Card 4 I/O27
ptr IoCard4Pt28->u.io:$B0000C.12.1    // I/O Card 4 I/O28
ptr IoCard4Pt29->u.io:$B0000C.13.1    // I/O Card 4 I/O29
ptr IoCard4Pt30->u.io:$B0000C.14.1    // I/O Card 4 I/O30
ptr IoCard4Pt31->u.io:$B0000C.15.1    // I/O Card 4 I/O31
ptr IoCard4Pt32->u.io:$B00010.8.1     // I/O Card 4 I/O32
ptr IoCard4Pt33->u.io:$B00010.9.1     // I/O Card 4 I/O33
ptr IoCard4Pt34->u.io:$B00010.10.1    // I/O Card 4 I/O34
ptr IoCard4Pt35->u.io:$B00010.11.1    // I/O Card 4 I/O35
ptr IoCard4Pt36->u.io:$B00010.12.1    // I/O Card 4 I/O36
ptr IoCard4Pt37->u.io:$B00010.13.1    // I/O Card 4 I/O37
ptr IoCard4Pt38->u.io:$B00010.14.1    // I/O Card 4 I/O38
ptr IoCard4Pt39->u.io:$B00010.15.1    // I/O Card 4 I/O39
ptr IoCard4Pt40->u.io:$B00014.8.1     // I/O Card 4 I/O40
ptr IoCard4Pt41->u.io:$B00014.9.1     // I/O Card 4 I/O41
ptr IoCard4Pt42->u.io:$B00014.10.1    // I/O Card 4 I/O42
ptr IoCard4Pt43->u.io:$B00014.11.1    // I/O Card 4 I/O43
ptr IoCard4Pt44->u.io:$B00014.12.1    // I/O Card 4 I/O44
ptr IoCard4Pt45->u.io:$B00014.13.1    // I/O Card 4 I/O45
ptr IoCard4Pt46->u.io:$B00014.14.1    // I/O Card 4 I/O46
ptr IoCard4Pt47->u.io:$B00014.15.1    // I/O Card 4 I/O47

// Byte-wide variables used for power-on configuration
ptr IoCard4Reg0->u.io:$B00000.8.8     // I/O Card 4 I/O00-07 as byte
ptr IoCard4Reg1->u.io:$B00004.8.8     // I/O Card 4 I/O08-15 as byte
ptr IoCard4Reg2->u.io:$B00008.8.8     // I/O Card 4 I/O16-23 as byte
ptr IoCard4Reg3->u.io:$B0000C.8.8     // I/O Card 4 I/O24-31 as byte
ptr IoCard4Reg4->u.io:$B00010.8.8     // I/O Card 4 I/O32-39 as byte
ptr IoCard4Reg5->u.io:$B00014.8.8     // I/O Card 4 I/O40-47 as byte
ptr IoCard4Reg6->u.io:$B00018.8.8     // I/O Card 4 latch inputs
ptr IoCard4Reg7->u.io:$B0001C.8.8     // I/O Card 4 control register
```

Base Offset $B00000, Middle Byte

```
// Single-bit variables used for accessing I/O points
ptr IoCard5Pt00->u.io:$B00000.16.1    // I/O Card 5 I/O00
ptr IoCard5Pt01->u.io:$B00000.17.1    // I/O Card 5 I/O01
ptr IoCard5Pt02->u.io:$B00000.18.1    // I/O Card 5 I/O02
ptr IoCard5Pt03->u.io:$B00000.19.1    // I/O Card 5 I/O03
ptr IoCard5Pt04->u.io:$B00000.20.1    // I/O Card 5 I/O04
ptr IoCard5Pt05->u.io:$B00000.21.1    // I/O Card 5 I/O05
ptr IoCard5Pt06->u.io:$B00000.22.1    // I/O Card 5 I/O06
ptr IoCard5Pt07->u.io:$B00000.23.1    // I/O Card 5 I/O07
ptr IoCard5Pt08->u.io:$B00004.16.1    // I/O Card 5 I/O08
ptr IoCard5Pt09->u.io:$B00004.17.1    // I/O Card 5 I/O09
ptr IoCard5Pt10->u.io:$B00004.18.1    // I/O Card 5 I/O10
ptr IoCard5Pt11->u.io:$B00004.19.1    // I/O Card 5 I/O11
ptr IoCard5Pt12->u.io:$B00004.20.1    // I/O Card 5 I/O12
ptr IoCard5Pt13->u.io:$B00004.21.1    // I/O Card 5 I/O13
ptr IoCard5Pt14->u.io:$B00004.22.1    // I/O Card 5 I/O14
ptr IoCard5Pt15->u.io:$B00004.23.1    // I/O Card 5 I/O15
ptr IoCard5Pt16->u.io:$B00008.16.1    // I/O Card 5 I/O16
ptr IoCard5Pt17->u.io:$B00008.17.1    // I/O Card 5 I/O17
ptr IoCard5Pt18->u.io:$B00008.18.1    // I/O Card 5 I/O18
ptr IoCard5Pt19->u.io:$B00008.19.1    // I/O Card 5 I/O19
ptr IoCard5Pt20->u.io:$B00008.20.1    // I/O Card 5 I/O20
ptr IoCard5Pt21->u.io:$B00008.21.1    // I/O Card 5 I/O21
ptr IoCard5Pt22->u.io:$B00008.22.1    // I/O Card 5 I/O22
ptr IoCard5Pt23->u.io:$B00008.23.1    // I/O Card 5 I/O23
ptr IoCard5Pt24->u.io:$B0000C.16.1    // I/O Card 5 I/O24
ptr IoCard5Pt25->u.io:$B0000C.17.1    // I/O Card 5 I/O25
ptr IoCard5Pt26->u.io:$B0000C.18.1    // I/O Card 5 I/O26
ptr IoCard5Pt27->u.io:$B0000C.19.1    // I/O Card 5 I/O27
ptr IoCard5Pt28->u.io:$B0000C.20.1    // I/O Card 5 I/O28
ptr IoCard5Pt29->u.io:$B0000C.21.1    // I/O Card 5 I/O29
ptr IoCard5Pt30->u.io:$B0000C.22.1    // I/O Card 5 I/O30
ptr IoCard5Pt31->u.io:$B0000C.23.1    // I/O Card 5 I/O31
ptr IoCard5Pt32->u.io:$B00010.16.1    // I/O Card 5 I/O32
ptr IoCard5Pt33->u.io:$B00010.17.1    // I/O Card 5 I/O33
ptr IoCard5Pt34->u.io:$B00010.18.1    // I/O Card 5 I/O34
ptr IoCard5Pt35->u.io:$B00010.19.1    // I/O Card 5 I/O35
ptr IoCard5Pt36->u.io:$B00010.20.1    // I/O Card 5 I/O36
ptr IoCard5Pt37->u.io:$B00010.21.1    // I/O Card 5 I/O37
ptr IoCard5Pt38->u.io:$B00010.22.1    // I/O Card 5 I/O38
ptr IoCard5Pt39->u.io:$B00010.23.1    // I/O Card 5 I/O39
ptr IoCard5Pt40->u.io:$B00014.16.1    // I/O Card 5 I/O40
ptr IoCard5Pt41->u.io:$B00014.17.1    // I/O Card 5 I/O41
ptr IoCard5Pt42->u.io:$B00014.18.1    // I/O Card 5 I/O42
ptr IoCard5Pt43->u.io:$B00014.19.1    // I/O Card 5 I/O43
ptr IoCard5Pt44->u.io:$B00014.20.1    // I/O Card 5 I/O44
ptr IoCard5Pt45->u.io:$B00014.21.1    // I/O Card 5 I/O45
ptr IoCard5Pt46->u.io:$B00014.22.1    // I/O Card 5 I/O46
ptr IoCard5Pt47->u.io:$B00014.23.1    // I/O Card 5 I/O47

// Byte-wide variables used for power-on configuration
ptr IoCard5Reg0->u.io:$B00000.16.8    // I/O Card 5 I/O00-07 as byte
ptr IoCard5Reg1->u.io:$B00004.16.8    // I/O Card 5 I/O08-15 as byte
ptr IoCard5Reg2->u.io:$B00008.16.8    // I/O Card 5 I/O16-23 as byte
ptr IoCard5Reg3->u.io:$B0000C.16.8    // I/O Card 5 I/O24-31 as byte
ptr IoCard5Reg4->u.io:$B00010.16.8    // I/O Card 5 I/O32-39 as byte
ptr IoCard5Reg5->u.io:$B00014.16.8    // I/O Card 5 I/O40-47 as byte
ptr IoCard5Reg6->u.io:$B00018.16.8    // I/O Card 5 latch inputs
ptr IoCard5Reg7->u.io:$B0001C.16.8    // I/O Card 5 control register
```

Base Offset $B00000, High Byte

```
// Single-bit variables used for accessing I/O points
ptr IoCard6Pt00->u.io:$B00000.24.1    // I/O Card 6 I/O00
ptr IoCard6Pt01->u.io:$B00000.25.1    // I/O Card 6 I/O01
ptr IoCard6Pt02->u.io:$B00000.26.1    // I/O Card 6 I/O02
ptr IoCard6Pt03->u.io:$B00000.27.1    // I/O Card 6 I/O03
ptr IoCard6Pt04->u.io:$B00000.28.1    // I/O Card 6 I/O04
ptr IoCard6Pt05->u.io:$B00000.29.1    // I/O Card 6 I/O05
ptr IoCard6Pt06->u.io:$B00000.30.1    // I/O Card 6 I/O06
ptr IoCard6Pt07->u.io:$B00000.31.1    // I/O Card 6 I/O07
ptr IoCard6Pt08->u.io:$B00004.24.1    // I/O Card 6 I/O08
ptr IoCard6Pt09->u.io:$B00004.25.1    // I/O Card 6 I/O09
ptr IoCard6Pt10->u.io:$B00004.26.1    // I/O Card 6 I/O10
ptr IoCard6Pt11->u.io:$B00004.27.1    // I/O Card 6 I/O11
ptr IoCard6Pt12->u.io:$B00004.28.1    // I/O Card 6 I/O12
ptr IoCard6Pt13->u.io:$B00004.29.1    // I/O Card 6 I/O13
ptr IoCard6Pt14->u.io:$B00004.30.1    // I/O Card 6 I/O14
ptr IoCard6Pt15->u.io:$B00004.31.1    // I/O Card 6 I/O15
ptr IoCard6Pt16->u.io:$B00008.24.1    // I/O Card 6 I/O16
ptr IoCard6Pt17->u.io:$B00008.25.1    // I/O Card 6 I/O17
ptr IoCard6Pt18->u.io:$B00008.26.1    // I/O Card 6 I/O18
ptr IoCard6Pt19->u.io:$B00008.27.1    // I/O Card 6 I/O19
ptr IoCard6Pt20->u.io:$B00008.28.1    // I/O Card 6 I/O20
ptr IoCard6Pt21->u.io:$B00008.29.1    // I/O Card 6 I/O21
ptr IoCard6Pt22->u.io:$B00008.30.1    // I/O Card 6 I/O22
ptr IoCard6Pt23->u.io:$B00008.31.1    // I/O Card 6 I/O23
ptr IoCard6Pt24->u.io:$B0000C.24.1    // I/O Card 6 I/O24
ptr IoCard6Pt25->u.io:$B0000C.25.1    // I/O Card 6 I/O25
ptr IoCard6Pt26->u.io:$B0000C.26.1    // I/O Card 6 I/O26
ptr IoCard6Pt27->u.io:$B0000C.27.1    // I/O Card 6 I/O27
ptr IoCard6Pt28->u.io:$B0000C.28.1    // I/O Card 6 I/O28
ptr IoCard6Pt29->u.io:$B0000C.29.1    // I/O Card 6 I/O29
ptr IoCard6Pt30->u.io:$B0000C.30.1    // I/O Card 6 I/O30
ptr IoCard6Pt31->u.io:$B0000C.31.1    // I/O Card 6 I/O31
ptr IoCard6Pt32->u.io:$B00010.24.1    // I/O Card 6 I/O32
ptr IoCard6Pt33->u.io:$B00010.25.1    // I/O Card 6 I/O33
ptr IoCard6Pt34->u.io:$B00010.26.1    // I/O Card 6 I/O34
ptr IoCard6Pt35->u.io:$B00010.27.1    // I/O Card 6 I/O35
ptr IoCard6Pt36->u.io:$B00010.28.1    // I/O Card 6 I/O36
ptr IoCard6Pt37->u.io:$B00010.29.1    // I/O Card 6 I/O37
ptr IoCard6Pt38->u.io:$B00010.30.1    // I/O Card 6 I/O38
ptr IoCard6Pt39->u.io:$B00010.31.1    // I/O Card 6 I/O39
ptr IoCard6Pt40->u.io:$B00014.24.1    // I/O Card 6 I/O40
ptr IoCard6Pt41->u.io:$B00014.25.1    // I/O Card 6 I/O41
ptr IoCard6Pt42->u.io:$B00014.26.1    // I/O Card 6 I/O42
ptr IoCard6Pt43->u.io:$B00014.27.1    // I/O Card 6 I/O43
ptr IoCard6Pt44->u.io:$B00014.28.1    // I/O Card 6 I/O44
ptr IoCard6Pt45->u.io:$B00014.29.1    // I/O Card 6 I/O45
ptr IoCard6Pt46->u.io:$B00014.30.1    // I/O Card 6 I/O46
ptr IoCard6Pt47->u.io:$B00014.31.1    // I/O Card 6 I/O47

// Byte-wide variables used for power-on configuration
ptr IoCard6Reg0->u.io:$B00000.24.8    // I/O Card 6 I/O00-07 as byte
ptr IoCard6Reg1->u.io:$B00004.24.8    // I/O Card 6 I/O08-15 as byte
ptr IoCard6Reg2->u.io:$B00008.24.8    // I/O Card 6 I/O16-23 as byte
ptr IoCard6Reg3->u.io:$B0000C.24.8    // I/O Card 6 I/O24-31 as byte
ptr IoCard6Reg4->u.io:$B00010.24.8    // I/O Card 6 I/O32-39 as byte
ptr IoCard6Reg5->u.io:$B00014.24.8    // I/O Card 6 I/O40-47 as byte
ptr IoCard6Reg6->u.io:$B00018.24.8    // I/O Card 6 latch inputs
ptr IoCard6Reg7->u.io:$B0001C.24.8    // I/O Card 6 control register
```

Base Offset $C00000, Low Byte

```
// Single-bit variables used for accessing I/O points
ptr IoCard7Pt00->u.io:$C00000.8.1 // I/O Card 7 I/O00
ptr IoCard7Pt01->u.io:$C00000.9.1 // I/O Card 7 I/O01
ptr IoCard7Pt02->u.io:$C00000.10.1 // I/O Card 7 I/O02
ptr IoCard7Pt03->u.io:$C00000.11.1 // I/O Card 7 I/O03
ptr IoCard7Pt04->u.io:$C00000.12.1 // I/O Card 7 I/O04
ptr IoCard7Pt05->u.io:$C00000.13.1 // I/O Card 7 I/O05
ptr IoCard7Pt06->u.io:$C00000.14.1 // I/O Card 7 I/O06
ptr IoCard7Pt07->u.io:$C00000.15.1 // I/O Card 7 I/O07
ptr IoCard7Pt08->u.io:$C00004.8.1 // I/O Card 7 I/O08
ptr IoCard7Pt09->u.io:$C00004.9.1 // I/O Card 7 I/O09
ptr IoCard7Pt10->u.io:$C00004.10.1 // I/O Card 7 I/O10
ptr IoCard7Pt11->u.io:$C00004.11.1 // I/O Card 7 I/O11
ptr IoCard7Pt12->u.io:$C00004.12.1 // I/O Card 7 I/O12
ptr IoCard7Pt13->u.io:$C00004.13.1 // I/O Card 7 I/O13
ptr IoCard7Pt14->u.io:$C00004.14.1 // I/O Card 7 I/O14
ptr IoCard7Pt15->u.io:$C00004.15.1 // I/O Card 7 I/O15
ptr IoCard7Pt16->u.io:$C00008.8.1 // I/O Card 7 I/O16
ptr IoCard7Pt17->u.io:$C00008.9.1 // I/O Card 7 I/O17
ptr IoCard7Pt18->u.io:$C00008.10.1 // I/O Card 7 I/O18
ptr IoCard7Pt19->u.io:$C00008.11.1 // I/O Card 7 I/O19
ptr IoCard7Pt20->u.io:$C00008.12.1 // I/O Card 7 I/O20
ptr IoCard7Pt21->u.io:$C00008.13.1 // I/O Card 7 I/O21
ptr IoCard7Pt22->u.io:$C00008.14.1 // I/O Card 7 I/O22
ptr IoCard7Pt23->u.io:$C00008.15.1 // I/O Card 7 I/O23
ptr IoCard7Pt24->u.io:$C0000C.8.1 // I/O Card 7 I/O24
ptr IoCard7Pt25->u.io:$C0000C.9.1 // I/O Card 7 I/O25
ptr IoCard7Pt26->u.io:$C0000C.10.1 // I/O Card 7 I/O26
ptr IoCard7Pt27->u.io:$C0000C.11.1 // I/O Card 7 I/O27
ptr IoCard7Pt28->u.io:$C0000C.12.1 // I/O Card 7 I/O28
ptr IoCard7Pt29->u.io:$C0000C.13.1 // I/O Card 7 I/O29
ptr IoCard7Pt30->u.io:$C0000C.14.1 // I/O Card 7 I/O30
ptr IoCard7Pt31->u.io:$C0000C.15.1 // I/O Card 7 I/O31
ptr IoCard7Pt32->u.io:$C00010.8.1 // I/O Card 7 I/O32
ptr IoCard7Pt33->u.io:$C00010.9.1 // I/O Card 7 I/O33
ptr IoCard7Pt34->u.io:$C00010.10.1 // I/O Card 7 I/O34
ptr IoCard7Pt35->u.io:$C00010.11.1 // I/O Card 7 I/O35
ptr IoCard7Pt36->u.io:$C00010.12.1 // I/O Card 7 I/O36
ptr IoCard7Pt37->u.io:$C00010.13.1 // I/O Card 7 I/O37
ptr IoCard7Pt38->u.io:$C00010.14.1 // I/O Card 7 I/O38
ptr IoCard7Pt39->u.io:$C00010.15.1 // I/O Card 7 I/O39
ptr IoCard7Pt40->u.io:$C00014.8.1 // I/O Card 7 I/O40
ptr IoCard7Pt41->u.io:$C00014.9.1 // I/O Card 7 I/O41
ptr IoCard7Pt42->u.io:$C00014.10.1 // I/O Card 7 I/O42
ptr IoCard7Pt43->u.io:$C00014.11.1 // I/O Card 7 I/O43
ptr IoCard7Pt44->u.io:$C00014.12.1 // I/O Card 7 I/O44
ptr IoCard7Pt45->u.io:$C00014.13.1 // I/O Card 7 I/O45
ptr IoCard7Pt46->u.io:$C00014.14.1 // I/O Card 7 I/O46
ptr IoCard7Pt47->u.io:$C00014.15.1 // I/O Card 7 I/O47

// Byte-wide variables used for power-on configuration
ptr IoCard7Reg0->u.io:$C00000.8.8 // I/O Card 7 I/O00-07 as byte
ptr IoCard7Reg1->u.io:$C00004.8.8 // I/O Card 7 I/O08-15 as byte
ptr IoCard7Reg2->u.io:$C00008.8.8 // I/O Card 7 I/O16-23 as byte
ptr IoCard7Reg3->u.io:$C0000C.8.8 // I/O Card 7 I/O24-31 as byte
ptr IoCard7Reg4->u.io:$C00010.8.8 // I/O Card 7 I/O32-39 as byte
ptr IoCard7Reg5->u.io:$C00014.8.8 // I/O Card 7 I/O40-47 as byte
ptr IoCard7Reg6->u.io:$C00018.8.8 // I/O Card 7 latch inputs
ptr IoCard7Reg7->u.io:$C0001C.8.8 // I/O Card 7 control register
```

Base Offset $C00000, Middle Byte

```
// Single-bit variables used for accessing I/O points
ptr IoCard8Pt00->u.io:$C00000.16.1 // I/O Card 8 I/O00
ptr IoCard8Pt01->u.io:$C00000.17.1 // I/O Card 8 I/O01
ptr IoCard8Pt02->u.io:$C00000.18.1 // I/O Card 8 I/O02
ptr IoCard8Pt03->u.io:$C00000.19.1 // I/O Card 8 I/O03
ptr IoCard8Pt04->u.io:$C00000.20.1 // I/O Card 8 I/O04
ptr IoCard8Pt05->u.io:$C00000.21.1 // I/O Card 8 I/O05
ptr IoCard8Pt06->u.io:$C00000.22.1 // I/O Card 8 I/O06
ptr IoCard8Pt07->u.io:$C00000.23.1 // I/O Card 8 I/O07
ptr IoCard8Pt08->u.io:$C00004.16.1 // I/O Card 8 I/O08
ptr IoCard8Pt09->u.io:$C00004.17.1 // I/O Card 8 I/O09
ptr IoCard8Pt10->u.io:$C00004.18.1 // I/O Card 8 I/O10
ptr IoCard8Pt11->u.io:$C00004.19.1 // I/O Card 8 I/O11
ptr IoCard8Pt12->u.io:$C00004.20.1 // I/O Card 8 I/O12
ptr IoCard8Pt13->u.io:$C00004.21.1 // I/O Card 8 I/O13
ptr IoCard8Pt14->u.io:$C00004.22.1 // I/O Card 8 I/O14
ptr IoCard8Pt15->u.io:$C00004.23.1 // I/O Card 8 I/O15
ptr IoCard8Pt16->u.io:$C00008.16.1 // I/O Card 8 I/O16
ptr IoCard8Pt17->u.io:$C00008.17.1 // I/O Card 8 I/O17
ptr IoCard8Pt18->u.io:$C00008.18.1 // I/O Card 8 I/O18
ptr IoCard8Pt19->u.io:$C00008.19.1 // I/O Card 8 I/O19
ptr IoCard8Pt20->u.io:$C00008.20.1 // I/O Card 8 I/O20
ptr IoCard8Pt21->u.io:$C00008.21.1 // I/O Card 8 I/O21
ptr IoCard8Pt22->u.io:$C00008.22.1 // I/O Card 8 I/O22
ptr IoCard8Pt23->u.io:$C00008.23.1 // I/O Card 8 I/O23
ptr IoCard8Pt24->u.io:$C0000C.16.1 // I/O Card 8 I/O24
ptr IoCard8Pt25->u.io:$C0000C.17.1 // I/O Card 8 I/O25
ptr IoCard8Pt26->u.io:$C0000C.18.1 // I/O Card 8 I/O26
ptr IoCard8Pt27->u.io:$C0000C.19.1 // I/O Card 8 I/O27
ptr IoCard8Pt28->u.io:$C0000C.20.1 // I/O Card 8 I/O28
ptr IoCard8Pt29->u.io:$C0000C.21.1 // I/O Card 8 I/O29
ptr IoCard8Pt30->u.io:$C0000C.22.1 // I/O Card 8 I/O30
ptr IoCard8Pt31->u.io:$C0000C.23.1 // I/O Card 8 I/O31
ptr IoCard8Pt32->u.io:$C00010.16.1 // I/O Card 8 I/O32
ptr IoCard8Pt33->u.io:$C00010.17.1 // I/O Card 8 I/O33
ptr IoCard8Pt34->u.io:$C00010.18.1 // I/O Card 8 I/O34
ptr IoCard8Pt35->u.io:$C00010.19.1 // I/O Card 8 I/O35
ptr IoCard8Pt36->u.io:$C00010.20.1 // I/O Card 8 I/O36
ptr IoCard8Pt37->u.io:$C00010.21.1 // I/O Card 8 I/O37
ptr IoCard8Pt38->u.io:$C00010.22.1 // I/O Card 8 I/O38
ptr IoCard8Pt39->u.io:$C00010.23.1 // I/O Card 8 I/O39
ptr IoCard8Pt40->u.io:$C00014.16.1 // I/O Card 8 I/O40
ptr IoCard8Pt41->u.io:$C00014.17.1 // I/O Card 8 I/O41
ptr IoCard8Pt42->u.io:$C00014.18.1 // I/O Card 8 I/O42
ptr IoCard8Pt43->u.io:$C00014.19.1 // I/O Card 8 I/O43
ptr IoCard8Pt44->u.io:$C00014.20.1 // I/O Card 8 I/O44
ptr IoCard8Pt45->u.io:$C00014.21.1 // I/O Card 8 I/O45
ptr IoCard8Pt46->u.io:$C00014.22.1 // I/O Card 8 I/O46
ptr IoCard8Pt47->u.io:$C00014.23.1 // I/O Card 8 I/O47

// Byte-wide variables used for power-on configuration
ptr IoCard8Reg0->u.io:$C00000.16.8 // I/O Card 8 I/O00-07 as byte
ptr IoCard8Reg1->u.io:$C00004.16.8 // I/O Card 8 I/O08-15 as byte
ptr IoCard8Reg2->u.io:$C00008.16.8 // I/O Card 8 I/O16-23 as byte
ptr IoCard8Reg3->u.io:$C0000C.16.8 // I/O Card 8 I/O24-31 as byte
ptr IoCard8Reg4->u.io:$C00010.16.8 // I/O Card 8 I/O32-39 as byte
ptr IoCard8Reg5->u.io:$C00014.16.8 // I/O Card 8 I/O40-47 as byte
ptr IoCard8Reg6->u.io:$C00018.16.8 // I/O Card 8 latch inputs
ptr IoCard8Reg7->u.io:$C0001C.16.8 // I/O Card 8 control register
```

Base Offset $C00000, High Byte

```
// Single-bit variables used for accessing I/O points
ptr IoCard9Pt00->u.io:$C00000.24.1 // I/O Card 9 I/O00
ptr IoCard9Pt01->u.io:$C00000.25.1 // I/O Card 9 I/O01
ptr IoCard9Pt02->u.io:$C00000.26.1 // I/O Card 9 I/O02
ptr IoCard9Pt03->u.io:$C00000.27.1 // I/O Card 9 I/O03
ptr IoCard9Pt04->u.io:$C00000.28.1 // I/O Card 9 I/O04
ptr IoCard9Pt05->u.io:$C00000.29.1 // I/O Card 9 I/O05
ptr IoCard9Pt06->u.io:$C00000.30.1 // I/O Card 9 I/O06
ptr IoCard9Pt07->u.io:$C00000.31.1 // I/O Card 9 I/O07
ptr IoCard9Pt08->u.io:$C00004.24.1 // I/O Card 9 I/O08
ptr IoCard9Pt09->u.io:$C00004.25.1 // I/O Card 9 I/O09
ptr IoCard9Pt10->u.io:$C00004.26.1 // I/O Card 9 I/O10
ptr IoCard9Pt11->u.io:$C00004.27.1 // I/O Card 9 I/O11
ptr IoCard9Pt12->u.io:$C00004.28.1 // I/O Card 9 I/O12
ptr IoCard9Pt13->u.io:$C00004.29.1 // I/O Card 9 I/O13
ptr IoCard9Pt14->u.io:$C00004.30.1 // I/O Card 9 I/O14
ptr IoCard9Pt15->u.io:$C00004.31.1 // I/O Card 9 I/O15
ptr IoCard9Pt16->u.io:$C00008.24.1 // I/O Card 9 I/O16
ptr IoCard9Pt17->u.io:$C00008.25.1 // I/O Card 9 I/O17
ptr IoCard9Pt18->u.io:$C00008.26.1 // I/O Card 9 I/O18
ptr IoCard9Pt19->u.io:$C00008.27.1 // I/O Card 9 I/O19
ptr IoCard9Pt20->u.io:$C00008.28.1 // I/O Card 9 I/O20
ptr IoCard9Pt21->u.io:$C00008.29.1 // I/O Card 9 I/O21
ptr IoCard9Pt22->u.io:$C00008.30.1 // I/O Card 9 I/O22
ptr IoCard9Pt23->u.io:$C00008.31.1 // I/O Card 9 I/O23
ptr IoCard9Pt24->u.io:$C0000C.24.1 // I/O Card 9 I/O24
ptr IoCard9Pt25->u.io:$C0000C.25.1 // I/O Card 9 I/O25
ptr IoCard9Pt26->u.io:$C0000C.26.1 // I/O Card 9 I/O26
ptr IoCard9Pt27->u.io:$C0000C.27.1 // I/O Card 9 I/O27
ptr IoCard9Pt28->u.io:$C0000C.28.1 // I/O Card 9 I/O28
ptr IoCard9Pt29->u.io:$C0000C.29.1 // I/O Card 9 I/O29
ptr IoCard9Pt30->u.io:$C0000C.30.1 // I/O Card 9 I/O30
ptr IoCard9Pt31->u.io:$C0000C.31.1 // I/O Card 9 I/O31
ptr IoCard9Pt32->u.io:$C00010.24.1 // I/O Card 9 I/O32
ptr IoCard9Pt33->u.io:$C00010.25.1 // I/O Card 9 I/O33
ptr IoCard9Pt34->u.io:$C00010.26.1 // I/O Card 9 I/O34
ptr IoCard9Pt35->u.io:$C00010.27.1 // I/O Card 9 I/O35
ptr IoCard9Pt36->u.io:$C00010.28.1 // I/O Card 9 I/O36
ptr IoCard9Pt37->u.io:$C00010.29.1 // I/O Card 9 I/O37
ptr IoCard9Pt38->u.io:$C00010.30.1 // I/O Card 9 I/O38
ptr IoCard9Pt39->u.io:$C00010.31.1 // I/O Card 9 I/O39
ptr IoCard9Pt40->u.io:$C00014.24.1 // I/O Card 9 I/O40
ptr IoCard9Pt41->u.io:$C00014.25.1 // I/O Card 9 I/O41
ptr IoCard9Pt42->u.io:$C00014.26.1 // I/O Card 9 I/O42
ptr IoCard9Pt43->u.io:$C00014.27.1 // I/O Card 9 I/O43
ptr IoCard9Pt44->u.io:$C00014.28.1 // I/O Card 9 I/O44
ptr IoCard9Pt45->u.io:$C00014.29.1 // I/O Card 9 I/O45
ptr IoCard9Pt46->u.io:$C00014.30.1 // I/O Card 9 I/O46
ptr IoCard9Pt47->u.io:$C00014.31.1 // I/O Card 9 I/O47

// Byte-wide variables used for power-on configuration
ptr IoCard9Reg0->u.io:$C00000.24.8 // I/O Card 9 I/O00-07 as byte
ptr IoCard9Reg1->u.io:$C00004.24.8 // I/O Card 9 I/O08-15 as byte
ptr IoCard9Reg2->u.io:$C00008.24.8 // I/O Card 9 I/O16-23 as byte
ptr IoCard9Reg3->u.io:$C0000C.24.8 // I/O Card 9 I/O24-31 as byte
ptr IoCard9Reg4->u.io:$C00010.24.8 // I/O Card 9 I/O32-39 as byte
ptr IoCard9Reg5->u.io:$C00014.24.8 // I/O Card 9 I/O40-47 as byte
ptr IoCard9Reg6->u.io:$C00018.24.8 // I/O Card 9 latch inputs
ptr IoCard9Reg7->u.io:$C0001C.24.8 // I/O Card 9 control register
```

Base offset $D00000, Low

```
// Single-bit variables used for accessing I/O points
ptr IoCard10Pt00->u.io:$D00000.8.1 // I/O Card 10 I/O00
ptr IoCard10Pt01->u.io:$D00000.9.1 // I/O Card 10 I/O01
ptr IoCard10Pt02->u.io:$D00000.10.1 // I/O Card 10 I/O02
ptr IoCard10Pt03->u.io:$D00000.11.1 // I/O Card 10 I/O03
ptr IoCard10Pt04->u.io:$D00000.12.1 // I/O Card 10 I/O04
ptr IoCard10Pt05->u.io:$D00000.13.1 // I/O Card 10 I/O05
ptr IoCard10Pt06->u.io:$D00000.14.1 // I/O Card 10 I/O06
ptr IoCard10Pt07->u.io:$D00000.15.1 // I/O Card 10 I/O07
ptr IoCard10Pt08->u.io:$D00004.8.1 // I/O Card 10 I/O08
ptr IoCard10Pt09->u.io:$D00004.9.1 // I/O Card 10 I/O09
ptr IoCard10Pt10->u.io:$D00004.10.1 // I/O Card 10 I/O10
ptr IoCard10Pt11->u.io:$D00004.11.1 // I/O Card 10 I/O11
ptr IoCard10Pt12->u.io:$D00004.12.1 // I/O Card 10 I/O12
ptr IoCard10Pt13->u.io:$D00004.13.1 // I/O Card 10 I/O13
ptr IoCard10Pt14->u.io:$D00004.14.1 // I/O Card 10 I/O14
ptr IoCard10Pt15->u.io:$D00004.15.1 // I/O Card 10 I/O15
ptr IoCard10Pt16->u.io:$D00008.8.1 // I/O Card 10 I/O16
ptr IoCard10Pt17->u.io:$D00008.9.1 // I/O Card 10 I/O17
ptr IoCard10Pt18->u.io:$D00008.10.1 // I/O Card 10 I/O18
ptr IoCard10Pt19->u.io:$D00008.11.1 // I/O Card 10 I/O19
ptr IoCard10Pt20->u.io:$D00008.12.1 // I/O Card 10 I/O20
ptr IoCard10Pt21->u.io:$D00008.13.1 // I/O Card 10 I/O21
ptr IoCard10Pt22->u.io:$D00008.14.1 // I/O Card 10 I/O22
ptr IoCard10Pt23->u.io:$D00008.15.1 // I/O Card 10 I/O23
ptr IoCard10Pt24->u.io:$D0000C.8.1 // I/O Card 10 I/O24
ptr IoCard10Pt25->u.io:$D0000C.9.1 // I/O Card 10 I/O25
ptr IoCard10Pt26->u.io:$D0000C.10.1 // I/O Card 10 I/O26
ptr IoCard10Pt27->u.io:$D0000C.11.1 // I/O Card 10 I/O27
ptr IoCard10Pt28->u.io:$D0000C.12.1 // I/O Card 10 I/O28
ptr IoCard10Pt29->u.io:$D0000C.13.1 // I/O Card 10 I/O29
ptr IoCard10Pt30->u.io:$D0000C.14.1 // I/O Card 10 I/O30
ptr IoCard10Pt31->u.io:$D0000C.15.1 // I/O Card 10 I/O31
ptr IoCard10Pt32->u.io:$D00010.8.1 // I/O Card 10 I/O32
ptr IoCard10Pt33->u.io:$D00010.9.1 // I/O Card 10 I/O33
ptr IoCard10Pt34->u.io:$D00010.10.1 // I/O Card 10 I/O34
ptr IoCard10Pt35->u.io:$D00010.11.1 // I/O Card 10 I/O35
ptr IoCard10Pt36->u.io:$D00010.12.1 // I/O Card 10 I/O36
ptr IoCard10Pt37->u.io:$D00010.13.1 // I/O Card 10 I/O37
ptr IoCard10Pt38->u.io:$D00010.14.1 // I/O Card 10 I/O38
ptr IoCard10Pt39->u.io:$D00010.15.1 // I/O Card 10 I/O39
ptr IoCard10Pt40->u.io:$D00014.8.1 // I/O Card 10 I/O40
ptr IoCard10Pt41->u.io:$D00014.9.1 // I/O Card 10 I/O41
ptr IoCard10Pt42->u.io:$D00014.10.1 // I/O Card 10 I/O42
ptr IoCard10Pt43->u.io:$D00014.11.1 // I/O Card 10 I/O43
ptr IoCard10Pt44->u.io:$D00014.12.1 // I/O Card 10 I/O44
ptr IoCard10Pt45->u.io:$D00014.13.1 // I/O Card 10 I/O45
ptr IoCard10Pt46->u.io:$D00014.14.1 // I/O Card 10 I/O46
ptr IoCard10Pt47->u.io:$D00014.15.1 // I/O Card 10 I/O47

// Byte-wide variables used for power-on configuration
ptr IoCard10Reg0->u.io:$D00000.8.8 // I/O Card 10 I/O00-07 as byte
ptr IoCard10Reg1->u.io:$D00004.8.8 // I/O Card 10 I/O08-15 as byte
ptr IoCard10Reg2->u.io:$D00008.8.8 // I/O Card 10 I/O16-23 as byte
ptr IoCard10Reg3->u.io:$D0000C.8.8 // I/O Card 10 I/O24-31 as byte
ptr IoCard10Reg4->u.io:$D00010.8.8 // I/O Card 10 I/O32-39 as byte
ptr IoCard10Reg5->u.io:$D00014.8.8 // I/O Card 10 I/O40-47 as byte
ptr IoCard10Reg6->u.io:$D00018.8.8 // I/O Card 10 latch inputs
ptr IoCard10Reg7->u.io:$D0001C.8.8 // I/O Card 10 control register
```

Base Offset $D00000, Middle Byte

```
// Single-bit variables used for accessing I/O points
ptr IoCard11Pt00->u.io:$D00000.16.1 // I/O Card 11 I/O00
ptr IoCard11Pt01->u.io:$D00000.17.1 // I/O Card 11 I/O01
ptr IoCard11Pt02->u.io:$D00000.18.1 // I/O Card 11 I/O02
ptr IoCard11Pt03->u.io:$D00000.19.1 // I/O Card 11 I/O03
ptr IoCard11Pt04->u.io:$D00000.20.1 // I/O Card 11 I/O04
ptr IoCard11Pt05->u.io:$D00000.21.1 // I/O Card 11 I/O05
ptr IoCard11Pt06->u.io:$D00000.22.1 // I/O Card 11 I/O06
ptr IoCard11Pt07->u.io:$D00000.23.1 // I/O Card 11 I/O07
ptr IoCard11Pt08->u.io:$D00004.16.1 // I/O Card 11 I/O08
ptr IoCard11Pt09->u.io:$D00004.17.1 // I/O Card 11 I/O09
ptr IoCard11Pt10->u.io:$D00004.18.1 // I/O Card 11 I/O10
ptr IoCard11Pt11->u.io:$D00004.19.1 // I/O Card 11 I/O11
ptr IoCard11Pt12->u.io:$D00004.20.1 // I/O Card 11 I/O12
ptr IoCard11Pt13->u.io:$D00004.21.1 // I/O Card 11 I/O13
ptr IoCard11Pt14->u.io:$D00004.22.1 // I/O Card 11 I/O14
ptr IoCard11Pt15->u.io:$D00004.23.1 // I/O Card 11 I/O15
ptr IoCard11Pt16->u.io:$D00008.16.1 // I/O Card 11 I/O16
ptr IoCard11Pt17->u.io:$D00008.17.1 // I/O Card 11 I/O17
ptr IoCard11Pt18->u.io:$D00008.18.1 // I/O Card 11 I/O18
ptr IoCard11Pt19->u.io:$D00008.19.1 // I/O Card 11 I/O19
ptr IoCard11Pt20->u.io:$D00008.20.1 // I/O Card 11 I/O20
ptr IoCard11Pt21->u.io:$D00008.21.1 // I/O Card 11 I/O21
ptr IoCard11Pt22->u.io:$D00008.22.1 // I/O Card 11 I/O22
ptr IoCard11Pt23->u.io:$D00008.23.1 // I/O Card 11 I/O23
ptr IoCard11Pt24->u.io:$D0000C.16.1 // I/O Card 11 I/O24
ptr IoCard11Pt25->u.io:$D0000C.17.1 // I/O Card 11 I/O25
ptr IoCard11Pt26->u.io:$D0000C.18.1 // I/O Card 11 I/O26
ptr IoCard11Pt27->u.io:$D0000C.19.1 // I/O Card 11 I/O27
ptr IoCard11Pt28->u.io:$D0000C.20.1 // I/O Card 11 I/O28
ptr IoCard11Pt29->u.io:$D0000C.21.1 // I/O Card 11 I/O29
ptr IoCard11Pt30->u.io:$D0000C.22.1 // I/O Card 11 I/O30
ptr IoCard11Pt31->u.io:$D0000C.23.1 // I/O Card 11 I/O31
ptr IoCard11Pt32->u.io:$D00010.16.1 // I/O Card 11 I/O32
ptr IoCard11Pt33->u.io:$D00010.17.1 // I/O Card 11 I/O33
ptr IoCard11Pt34->u.io:$D00010.18.1 // I/O Card 11 I/O34
ptr IoCard11Pt35->u.io:$D00010.19.1 // I/O Card 11 I/O35
ptr IoCard11Pt36->u.io:$D00010.20.1 // I/O Card 11 I/O36
ptr IoCard11Pt37->u.io:$D00010.21.1 // I/O Card 11 I/O37
ptr IoCard11Pt38->u.io:$D00010.22.1 // I/O Card 11 I/O38
ptr IoCard11Pt39->u.io:$D00010.23.1 // I/O Card 11 I/O39
ptr IoCard11Pt40->u.io:$D00014.16.1 // I/O Card 11 I/O40
ptr IoCard11Pt41->u.io:$D00014.17.1 // I/O Card 11 I/O41
ptr IoCard11Pt42->u.io:$D00014.18.1 // I/O Card 11 I/O42
ptr IoCard11Pt43->u.io:$D00014.19.1 // I/O Card 11 I/O43
ptr IoCard11Pt44->u.io:$D00014.20.1 // I/O Card 11 I/O44
ptr IoCard11Pt45->u.io:$D00014.21.1 // I/O Card 11 I/O45
ptr IoCard11Pt46->u.io:$D00014.22.1 // I/O Card 11 I/O46
ptr IoCard11Pt47->u.io:$D00014.23.1 // I/O Card 11 I/O47

// Byte-wide variables used for power-on configuration
ptr IoCard11Reg0->u.io:$D00000.16.8 // I/O Card 11 I/O00-07 as byte
ptr IoCard11Reg1->u.io:$D00004.16.8 // I/O Card 11 I/O08-15 as byte
ptr IoCard11Reg2->u.io:$D00008.16.8 // I/O Card 11 I/O16-23 as byte
ptr IoCard11Reg3->u.io:$D0000C.16.8 // I/O Card 11 I/O24-31 as byte
ptr IoCard11Reg4->u.io:$D00010.16.8 // I/O Card 11 I/O32-39 as byte
ptr IoCard11Reg5->u.io:$D00014.16.8 // I/O Card 11 I/O40-47 as byte
ptr IoCard11Reg6->u.io:$D00018.16.8 // I/O Card 11 latch inputs
ptr IoCard11Reg7->u.io:$D0001C.16.8 // I/O Card 11 control register
```

Base offset $D00000, High Byte

```
// Single-bit variables used for accessing I/O points
ptr IoCard12Pt00->u.io:$D00000.24.1 // I/O Card 12 I/O00
ptr IoCard12Pt01->u.io:$D00000.25.1 // I/O Card 12 I/O01
ptr IoCard12Pt02->u.io:$D00000.26.1 // I/O Card 12 I/O02
ptr IoCard12Pt03->u.io:$D00000.27.1 // I/O Card 12 I/O03
ptr IoCard12Pt04->u.io:$D00000.28.1 // I/O Card 12 I/O04
ptr IoCard12Pt05->u.io:$D00000.29.1 // I/O Card 12 I/O05
ptr IoCard12Pt06->u.io:$D00000.30.1 // I/O Card 12 I/O06
ptr IoCard12Pt07->u.io:$D00000.31.1 // I/O Card 12 I/O07
ptr IoCard12Pt08->u.io:$D00004.24.1 // I/O Card 12 I/O08
ptr IoCard12Pt09->u.io:$D00004.25.1 // I/O Card 12 I/O09
ptr IoCard12Pt10->u.io:$D00004.26.1 // I/O Card 12 I/O10
ptr IoCard12Pt11->u.io:$D00004.27.1 // I/O Card 12 I/O11
ptr IoCard12Pt12->u.io:$D00004.28.1 // I/O Card 12 I/O12
ptr IoCard12Pt13->u.io:$D00004.29.1 // I/O Card 12 I/O13
ptr IoCard12Pt14->u.io:$D00004.30.1 // I/O Card 12 I/O14
ptr IoCard12Pt15->u.io:$D00004.31.1 // I/O Card 12 I/O15
ptr IoCard12Pt16->u.io:$D00008.24.1 // I/O Card 12 I/O16
ptr IoCard12Pt17->u.io:$D00008.25.1 // I/O Card 12 I/O17
ptr IoCard12Pt18->u.io:$D00008.26.1 // I/O Card 12 I/O18
ptr IoCard12Pt19->u.io:$D00008.27.1 // I/O Card 12 I/O19
ptr IoCard12Pt20->u.io:$D00008.28.1 // I/O Card 12 I/O20
ptr IoCard12Pt21->u.io:$D00008.29.1 // I/O Card 12 I/O21
ptr IoCard12Pt22->u.io:$D00008.30.1 // I/O Card 12 I/O22
ptr IoCard12Pt23->u.io:$D00008.31.1 // I/O Card 12 I/O23
ptr IoCard12Pt24->u.io:$D0000C.24.1 // I/O Card 12 I/O24
ptr IoCard12Pt25->u.io:$D0000C.25.1 // I/O Card 12 I/O25
ptr IoCard12Pt26->u.io:$D0000C.26.1 // I/O Card 12 I/O26
ptr IoCard12Pt27->u.io:$D0000C.27.1 // I/O Card 12 I/O27
ptr IoCard12Pt28->u.io:$D0000C.28.1 // I/O Card 12 I/O28
ptr IoCard12Pt29->u.io:$D0000C.29.1 // I/O Card 12 I/O29
ptr IoCard12Pt30->u.io:$D0000C.30.1 // I/O Card 12 I/O30
ptr IoCard12Pt31->u.io:$D0000C.31.1 // I/O Card 12 I/O31
ptr IoCard12Pt32->u.io:$D00010.24.1 // I/O Card 12 I/O32
ptr IoCard12Pt33->u.io:$D00010.25.1 // I/O Card 12 I/O33
ptr IoCard12Pt34->u.io:$D00010.26.1 // I/O Card 12 I/O34
ptr IoCard12Pt35->u.io:$D00010.27.1 // I/O Card 12 I/O35
ptr IoCard12Pt36->u.io:$D00010.28.1 // I/O Card 12 I/O36
ptr IoCard12Pt37->u.io:$D00010.29.1 // I/O Card 12 I/O37
ptr IoCard12Pt38->u.io:$D00010.30.1 // I/O Card 12 I/O38
ptr IoCard12Pt39->u.io:$D00010.31.1 // I/O Card 12 I/O39
ptr IoCard12Pt40->u.io:$D00014.24.1 // I/O Card 12 I/O40
ptr IoCard12Pt41->u.io:$D00014.25.1 // I/O Card 12 I/O41
ptr IoCard12Pt42->u.io:$D00014.26.1 // I/O Card 12 I/O42
ptr IoCard12Pt43->u.io:$D00014.27.1 // I/O Card 12 I/O43
ptr IoCard12Pt44->u.io:$D00014.28.1 // I/O Card 12 I/O44
ptr IoCard12Pt45->u.io:$D00014.29.1 // I/O Card 12 I/O45
ptr IoCard12Pt46->u.io:$D00014.30.1 // I/O Card 12 I/O46
ptr IoCard12Pt47->u.io:$D00014.31.1 // I/O Card 12 I/O47

// Byte-wide variables used for power-on configuration
ptr IoCard12Reg0->u.io:$D00000.24.8 // I/O Card 12 I/O00-07 as byte
ptr IoCard12Reg1->u.io:$D00004.24.8 // I/O Card 12 I/O08-15 as byte
ptr IoCard12Reg2->u.io:$D00008.24.8 // I/O Card 12 I/O16-23 as byte
ptr IoCard12Reg3->u.io:$D0000C.24.8 // I/O Card 12 I/O24-31 as byte
ptr IoCard12Reg4->u.io:$D00010.24.8 // I/O Card 12 I/O32-39 as byte
ptr IoCard12Reg5->u.io:$D00014.24.8 // I/O Card 12 I/O40-47 as byte
ptr IoCard12Reg6->u.io:$D00018.24.8 // I/O Card 12 latch inputs
ptr IoCard12Reg7->u.io:$D0001C.24.8 // I/O Card 12 control register
```

APPENDIX D: THE CONTROL WORD

The Control Word must be set equal to 7 every startup, usually in PLC 1.
The function of each bit in the control word is as follows:

Control Word Bit Number	Value	I/O Bits Modified	I/O Bits Function
0	1	0–7	Inputs 1-8
1	1	8–15	Inputs 9-16
2	1	16–23	Inputs 17-24
3	0	24–31	Outputs 1-8
4	0	32–39	Outputs 9-16
5	0	40–47	Outputs 17-24
6	0	None	Register Select
7	0	None	Register Select

The ACC-11E will only operate with a control word value of 7 because it cannot be altered from its 24 input/24 output configuration. The value would only be different for an accessory with a different configuration, for instance a 48-bit input card.

Register Select Control Bits

Note

The register select control bits are generally not applicable to the ACC-11E and should therefore generally be left at the default value of 0.

Bits 6 and 7 of the control register together select which of four possible registers can be accessed at each of the addresses {Base + 0} through {Base + 5}. They also select which of two possible registers can be selected at {Base + 6}. The following table shows how these bits select registers:

Bit 7	Bit 6	Combined Value	{Base + 0} to {Base + 5} Register Selected	{Base + 6} Register Selected
0	0	0	Data Register	Data Register
0	1	1	Setup Register 1	Setup Register
1	0	2	Setup Register 2	n. a.
1	1	3	Setup Register 3	n. a.

The setup registers can be used to configure the ACC-11E for gray code, logic inversion, or latching inputs (see the ACC-14E manual for latching inputs).
Typically, bits 6 and 7 are left at zero. If not left at zero, typically non-zero combined values of bits 6 and 7 are only used for initial configuration of the IC. These values are used to access the setup registers at

the other addresses. After the configuration is finished, a zero is written to Bit 6 and 7 so that the data registers can be accessed.