Cat. No. W302-E1-15

生産終了
DISCONTINUED

Programmable Controllers

C200HX-CPU□□-E/-ZE
C200HG-CPU□□-E/-ZE
C200HE-CPU□□-E/-ZE

INSTALLATION GUIDE

OMRON

C200HX-CPU□□-E/-ZE
C200HG-CPU□□-E/-ZE
C200HE-CPU□□-E/-ZE
Programmable Controllers

Installation Guide

Revised February 2016

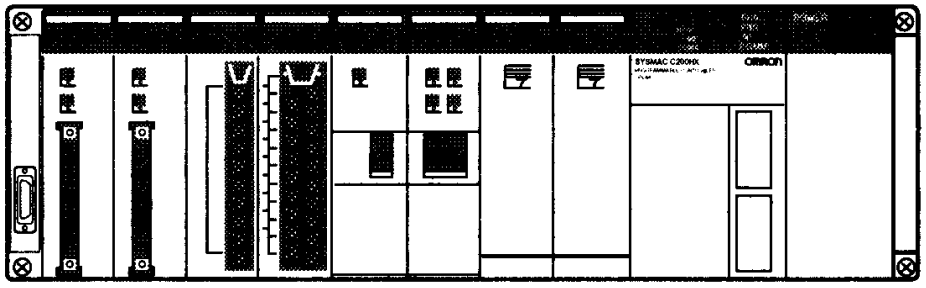

Notice:

OMRON products are manufactured for use according to proper procedures by a qualified operator and only for the purposes described in this manual.

The following conventions are used to indicate and classify precautions in this manual. Always heed the information provided with them. Failure to heed precautions can result in injury to people or damage to the product.

⚠ DANGER Indicates an imminently hazardous situation which, if not avoided, will result in death or serious injury. Additionally, there may be severe property damage.

⚠ WARNING Indicates a potentially hazardous situation which, if not avoided, could result in death or serious injury. Additionally, there may be severe property damage.

⚠ Caution Indicates a potentially hazardous situation which, if not avoided, may result in minor or moderate injury, or property damage.

OMRON Product References

All OMRON products are capitalized in this manual. The word “Unit” is also capitalized when it refers to an OMRON product, regardless of whether or not it appears in the proper name of the product.

The abbreviation “Ch,” which appears in some displays and on some OMRON products, often means “word” and is abbreviated “Wd” in documentation in this sense.

The abbreviation “PC” means Programmable Controller and is not used as an abbreviation for anything else.

Visual Aids

The following headings appear in the left column of the manual to help you locate different types of information.

Note Indicates information of particular interest for efficient and convenient operation of the product.

1, 2, 3... 1. Indicates lists of one sort or another, such as procedures, checklists, etc.

© OMRON, 1996

All rights reserved. No part of this publication may be reproduced, stored in a retrieval system, or transmitted, in any form, or by any means, mechanical, electronic, photocopying, recording, or otherwise, without the prior written permission of OMRON.

No patent liability is assumed with respect to the use of the information contained herein. Moreover, because OMRON is constantly striving to improve its high-quality products, the information contained in this manual is subject to change without notice. Every precaution has been taken in the preparation of this manual. Nevertheless, OMRON assumes no responsibility for errors or omissions. Neither is any liability assumed for damages resulting from the use of the information contained in this publication.

TABLE OF CONTENTS

PRECAUTIONS xiii

1 Intended Audience xiv
2 General Precautions xiv
3 Safety Precautions xiv
4 Operating Environment Precautions xv
5 Application Precautions xvi
6 EC Directives xviii

SECTION 1
Introduction 1

1-1 What is a Control System? 2
1-2 The Role of the PC 4
1-2-1 Input Devices 4
1-2-2 Output Devices 4
1-3 How Does a PC Work? 5

SECTION 2
System Configuration and Units 9

2-1 Basic Configuration 10
2-1-1 CPU Rack 10
2-1-2 Expansion I/O Racks 13
2-1-3 I/O Connecting Cable 14
2-2 Units 15
2-2-1 CPU Units 15
2-2-2 Memory Cassettes 17
2-2-3 Communications Boards 18
2-2-4 Power Supply Units 19
2-2-5 Backplanes 24
2-2-6 Standard I/O Units 25
2-2-7 Group-2 High-density I/O Units 27
2-2-8 High-density I/O Units Classified as Special I/O Units 30
2-3 Peripheral Devices 31
2-3-1 Programming Consoles 31
2-3-2 CX-Programmer 32
2-4 Expanded System Configurations 33
2-4-1 Required Mounting Conditions 33
2-4-2 Special I/O Units 33
2-4-3 Link Systems and Networks 39

SECTION 3
Installation and Wiring 47

3-1 Installation Environment 48
3-1-1 Installation and Wiring Precautions. 48
3-1-2 Installing Racks 49
3-1-3 Mounting Height 51
3-1-4 Mounting Dimensions (Units: mm) 52
3-1-5 DIN Track Mounting 53
3-1-6 Mounting Units to the Backplane 56
3-1-7 I/O Connecting Cables 58
3-1-8 Mounting Memory Cassettes 59
3-1-9 Mounting a Communications Board 60
3-2 Wiring 61

TABLE OF CONTENTS

3-2-1 Power Supply Wiring 61
3-2-2 Standard I/O Unit Wiring 68
3-2-3 Electrical Noise 74

SECTION 4
Programming Console Operation 79

4-1 Using the Programming Console 80
4-1-1 Nomenclature 80
4-1-2 Connecting the Programming Console 81
4-2 Checking Initial Operation 82

SECTION 5
Troubleshooting, Inspections, and Maintenance 83

5-1 Troubleshooting 84
5-2 Inspection and Maintenance 87
5-2-1 Replacing Output Unit Fuses 87
5-2-2 Replacing Relays 88
5-2-3 Batteries 91
5-3 Inspections 92
5-4 Using Power Supply Units with Replacement Notification 93

Appendices

A Standard Models 95
B Specifications 113
C Unit Current and Power Consumption 213
D Dimensions and Mounting Methods 219
E Power Supply Units with Replacement Notification 229
F Precautions when Replacing the C200HW-PA204/PA204R 237

Glossary 239

Index 243

Revision History 247

About this Manual:

This manual describes the installation of C200HX, C200HG, and C200HE Programmable Controllers, and it includes the sections described below. Programming and operating information is provided in the *C200HX/C200HG/C200HE Operation Manual*.

Please read this manual completely and be sure you understand the information provided before attempting to install a C200HX/C200HG/C200HE PC. **Be sure to read the precautions in the following section.**

Section 1 is an introduction to Programmable Controllers (or PCs). General information is provided on PCs and how they work.

Section 2 provides a description of all the components of the C200HX/C200HG/C200HE. The names of the parts of each Unit are given. Expanded systems, including networks and Special I/O Units are also introduced.

Section 3 describes how to install and wire a PC System.

Section 4 provides general information about the Programming Console.

Section 5 provides information on hardware and software errors that occur during PC operation. It also covers maintenance and inspection, and explains how to replace consumable components such as fuses, relays, and batteries.

Appendix A provides tables of standard models.

Appendix B provides tables of Unit specifications.

Appendix C provides the current/power consumptions for the Units and calculations of the total consumption of a PC.

Appendix D provides Unit dimensions and mounting information.

Appendix E provides information on the Power Supply Units with Replacement Notification.

Appendix F lists the differences between different Power Supply Units.

A ***Glossary***, and an ***Index*** are also provided.

⚠WARNING Failure to read and understand the information provided in this manual may result in personal injury or death, damage to the product, or product failure. Please read each section in its entirety and be sure you understand the information provided in the section and related sections before attempting any of the procedures or operations given.

Terms and Conditions Agreement

Warranty, Limitations of Liability

Warranties

● Exclusive Warranty

Omron's exclusive warranty is that the Products will be free from defects in materials and workmanship for a period of twelve months from the date of sale by Omron (or such other period expressed in writing by Omron). Omron disclaims all other warranties, express or implied.

● Limitations

OMRON MAKES NO WARRANTY OR REPRESENTATION, EXPRESS OR IMPLIED, ABOUT NON-INFRINGEMENT, MERCHANTABILITY OR FITNESS FOR A PARTICULAR PURPOSE OF THE PRODUCTS. BUYER ACKNOWLEDGES THAT IT ALONE HAS DETERMINED THAT THE PRODUCTS WILL SUITABLY MEET THE REQUIREMENTS OF THEIR INTENDED USE.

Omron further disclaims all warranties and responsibility of any type for claims or expenses based on infringement by the Products or otherwise of any intellectual property right.

● Buyer Remedy

Omron's sole obligation hereunder shall be, at Omron's election, to (i) replace (in the form originally shipped with Buyer responsible for labor charges for removal or replacement thereof) the non-complying Product, (ii) repair the non-complying Product, or (iii) repay or credit Buyer an amount equal to the purchase price of the non-complying Product; provided that in no event shall Omron be responsible for warranty, repair, indemnity or any other claims or expenses regarding the Products unless Omron's analysis confirms that the Products were properly handled, stored, installed and maintained and not subject to contamination, abuse, misuse or inappropriate modification. Return of any Products by Buyer must be approved in writing by Omron before shipment. Omron Companies shall not be liable for the suitability or unsuitability or the results from the use of Products in combination with any electrical or electronic components, circuits, system assemblies or any other materials or substances or environments. Any advice, recommendations or information given orally or in writing, are not to be construed as an amendment or addition to the above warranty.

See http://www.omron.com/global/ or contact your Omron representative for published information.

Limitation on Liability; Etc

OMRON COMPANIES SHALL NOT BE LIABLE FOR SPECIAL, INDIRECT, INCIDENTAL, OR CONSEQUENTIAL DAMAGES, LOSS OF PROFITS OR PRODUCTION OR COMMERCIAL LOSS IN ANY WAY CONNECTED WITH THE PRODUCTS, WHETHER SUCH CLAIM IS BASED IN CONTRACT, WARRANTY, NEGLIGENCE OR STRICT LIABILITY.

Further, in no event shall liability of Omron Companies exceed the individual price of the Product on which liability is asserted.

Application Considerations

Suitability of Use

Omron Companies shall not be responsible for conformity with any standards, codes or regulations which apply to the combination of the Product in the Buyer's application or use of the Product. At Buyer's request, Omron will provide applicable third party certification documents identifying ratings and limitations of use which apply to the Product. This information by itself is not sufficient for a complete determination of the suitability of the Product in combination with the end product, machine, system, or other application or use. Buyer shall be solely responsible for determining appropriateness of the particular Product with respect to Buyer's application, product or system. Buyer shall take application responsibility in all cases.

NEVER USE THE PRODUCT FOR AN APPLICATION INVOLVING SERIOUS RISK TO LIFE OR PROPERTY WITHOUT ENSURING THAT THE SYSTEM AS A WHOLE HAS BEEN DESIGNED TO ADDRESS THE RISKS, AND THAT THE OMRON PRODUCT(S) IS PROPERLY RATED AND INSTALLED FOR THE INTENDED USE WITHIN THE OVERALL EQUIPMENT OR SYSTEM.

Programmable Products

Omron Companies shall not be responsible for the user's programming of a programmable Product, or any consequence thereof.

Disclaimers

Performance Data

Data presented in Omron Company websites, catalogs and other materials is provided as a guide for the user in determining suitability and does not constitute a warranty. It may represent the result of Omron's test conditions, and the user must correlate it to actual application requirements. Actual performance is subject to the Omron's Warranty and Limitations of Liability.

Change in Specifications

Product specifications and accessories may be changed at any time based on improvements and other reasons. It is our practice to change part numbers when published ratings or features are changed, or when significant construction changes are made. However, some specifications of the Product may be changed without any notice. When in doubt, special part numbers may be assigned to fix or establish key specifications for your application. Please consult with your Omron's representative at any time to confirm actual specifications of purchased Product.

Errors and Omissions

Information presented by Omron Companies has been checked and is believed to be accurate; however, no responsibility is assumed for clerical, typographical or proofreading errors or omissions.

PRECAUTIONS

This section provides general precautions for using the Programmable Controller (PC) and related devices.

The information contained in this section is important for the safe and reliable application of the PC. You must read this section and understand the information contained before attempting to set up or operate a PC system.

1 Intended Audience xiv
2 General Precautions xiv
3 Safety Precautions xiv
4 Operating Environment Precautions xv
5 Application Precautions xvi
6 EC Directives xviii

1 Intended Audience

This manual is intended for the following personnel, who must also have knowledge of electrical systems (an electrical engineer or the equivalent).

- Personnel in charge of installing FA systems.
- Personnel in charge of designing FA systems.
- Personnel in charge of managing FA systems and facilities.

2 General Precautions

The user must operate the product according to the performance specifications described in the operation manuals.

Before using the product under conditions which are not described in the manual or applying the product to nuclear control systems, railroad systems, aviation systems, vehicles, combustion systems, medical equipment, amusement machines, safety equipment, and other systems, machines, and equipment that may have a serious influence on lives and property if used improperly, consult your OMRON representative.

Make sure that the ratings and performance characteristics of the product are sufficient for the systems, machines, and equipment, and be sure to provide the systems, machines, and equipment with double safety mechanisms.

This manual provides information for programming and operating OMRON PCs. Be sure to read this manual before attempting to use the software and keep this manual close at hand for reference during operation.

⚠ WARNING It is extremely important that a PC and all PC Units be used for the specified purpose and under the specified conditions, especially in applications that can directly or indirectly affect human life. You must consult with your OMRON representative before applying a PC System to the abovementioned applications.

3 Safety Precautions

⚠ WARNING Do not attempt to take any Unit apart while the power is being supplied. Doing so may result in electric shock.

⚠ WARNING Do not touch any of the terminals or terminal blocks while the power is being supplied. Doing so may result in electric shock.

⚠ WARNING Do not attempt to disassemble, repair, or modify any Units. Any attempt to do so may result in malfunction, fire, or electric shock.

⚠ WARNING Do not touch the Power Supply Unit while power is being supplied or immediately after power has been turned OFF. Doing so may result in electric shock.

⚠ WARNING Provide safety measures in external circuits (i.e., not in the Programmable Controller), including the following items, to ensure safety in the system if an abnormality occurs due to malfunction of the PC or another external factor affecting the PC operation. Not doing so may result in serious accidents.

- Emergency stop circuits, interlock circuits, limit circuits, and similar safety measures must be provided in external control circuits.
- The PC will turn OFF all outputs when its self-diagnosis function detects any error or when a severe failure alarm (FALS) instruction is executed. Unexpected operation, however, may still occur for errors in the I/O control section, errors in I/O memory, and other errors that cannot be detected by the self-diagnosis function. As a countermeasure for all such errors, external safety measures must be provided to ensure safety in the system.
- The PC outputs may remain ON or OFF due to deposition or burning of the output relays or destruction of the output transistors. As a countermeasure for such problems, external safety measures must be provided to ensure safety in the system.
- When the 24-VDC output (service power supply to the PC) is overloaded or short-circuited, the voltage may drop and result in the outputs being turned OFF. As a countermeasure for such problems, external safety measures must be provided to ensure safety in the system.

Caution Execute online edit only after confirming that no adverse effects will be caused by extending the cycle time. Otherwise, the input signals may not be readable.

Caution Confirm safety at the destination node before transferring a program to another node or changing contents of the I/O memory area. Doing either of these without confirming safety may result in injury.

Caution Tighten the screws on the terminal block of the AC Power Supply Unit to the torque specified in the operation manual. The loose screws may result in burning or malfunction.

Caution When using the C200HW-PA209R Power Supply Unit with an 8-slot or 10-slot CPU Backplane or Expansion I/O Backplane, be sure to use only Backplanes with “-V1” at the end of the model number. Using an 8-slot or 10-slot Backplane without “-V1” at the end of the model number may result in malfunction due to deterioration of the base or pattern burnout. The 3-slot and 5-slot Backplanes do not come in “-V1” models, and models without “-V1” can be used.

4 Operating Environment Precautions

Caution Do not operate the control system in the following locations:

- Locations subject to direct sunlight.
- Locations subject to temperatures or humidity outside the range specified in the specifications.
- Locations subject to condensation as the result of severe changes in temperature.
- Locations subject to corrosive or flammable gases.
- Locations subject to dust (especially iron dust) or salts.
- Locations subject to exposure to water, oil, or chemicals.
- Locations subject to shock or vibration.

Caution Take appropriate and sufficient countermeasures when installing systems in the following locations:

- Locations subject to static electricity or other forms of noise.
- Locations subject to strong electromagnetic fields.
- Locations subject to possible exposure to radioactivity.
- Locations close to power supplies.

Caution The operating environment of the PC system can have a large effect on the longevity and reliability of the system. Improper operating environments can lead to malfunction, failure, and other unforeseeable problems with the PC system. Be sure that the operating environment is within the specified conditions at installation and remains within the specified conditions during the life of the system.

5 Application Precautions

Observe the following precautions when using the PC system.

WARNING Always heed these precautions. Failure to abide by the following precautions could lead to serious or possibly fatal injury.

- Always ground the system to 100 Ω or less when installing the Units. Not connecting to a ground of 100 Ω or less may result in electric shock.
- Always turn OFF the power supply to the PC before attempting any of the following. Not turning OFF the power supply may result in malfunction or electric shock.
  - Mounting or dismounting I/O Units, CPU Units, Memory Cassettes, Power Supply Units, or any other Units.
  - Assembling the Units.
  - Setting DIP switches or rotary switches.
  - Connecting cables or wiring the system.
  - Connecting or disconnecting the connectors.

Caution Failure to abide by the following precautions could lead to faulty operation of the PC or the system, or could damage the PC or PC Units. Always heed these precautions.

- Fail-safe measures must be taken by the customer to ensure safety in the event of incorrect, missing, or abnormal signals caused by broken signal lines, momentary power interruptions, or other causes.
- Always use the power supply voltages specified in this manual. An incorrect voltage may result in malfunction or burning.
- Take appropriate measures to ensure that the specified power with the rated voltage and frequency is supplied. Be particularly careful in places where the power supply is unstable. An incorrect power supply may result in malfunction.
- Install external breakers and take other safety measures against short-circuiting in external wiring. Insufficient safety measures against short-circuiting may result in burning.
- Install Units as far as possible away from devices that generate strong, high-frequency noise.
- Do not apply voltages to the Input Units in excess of the rated input voltage. Excess voltages may result in burning.
- Do not apply voltages or connect loads to the Output Units in excess of the maximum switching capacity. Excess voltage or loads may result in burning.
- Change the applied voltage gradually using the adjuster on the Tester. If dielectric strength is suddenly applied or turned OFF using the switch on the Tester, the generated impulse voltage may damage the Power Supply Unit.

- Disconnect the LG terminal on the Power Supply Unit from the GR terminal before executing insulation resistance or withstand voltage tests.
- Be sure that all the mounting screws, terminal screws, and cable connector screws are tightened to the torque specified in this manual. Incorrect tightening torque may result in malfunction.
- Do not apply a force greater than 100 N on the terminal block when tightening the terminals.
- Do not drop the product or subject it to excessive vibration or shock.
- Leave the label attached to the Unit when wiring. Removing the label may result in malfunction if foreign matter enters the Unit.
- Remove the label after the completion of wiring to ensure proper heat dissipation. Leaving the label attached may result in malfunction.
- Double-check all wiring and switch settings before turning ON the power supply. Incorrect wiring may result in burning.
- Wire correctly. Incorrect wiring may result in burning.
- Mount Units only after checking terminal blocks and connectors completely.
- Be sure that the terminal blocks, Memory Units, expansion cables, and other items with locking devices are properly locked into place. Improper locking may result in malfunction.
- Check the user program for proper execution before actually running it on the Unit. Not checking the program may result in an unexpected operation.
- Confirm that no adverse effect will occur in the system before attempting any of the following. Not doing so may result in an unexpected operation.
  - Changing the operating mode of the PC. (This includes changing the start-up operating mode.)
  - Force-setting/force-resetting any bit in memory.
  - Changing the present value of any word or any set value in memory.
- Resume operation only after transferring to the new CPU Unit the contents of the DM Area, HR Area, and other data required for resuming operation. Not doing so may result in an unexpected operation.
- Do not pull on the cables or bend the cables beyond their natural limit. Doing either of these may break the cables.
- Do not place objects on top of the cables or other wiring lines. Doing so may break the cables.
- Use crimp terminals for wiring. Do not connect bare stranded wires directly to terminals. Connection of bare stranded wires may result in burning.
- When replacing parts, be sure to confirm that the rating of a new part is correct. Not doing so may result in malfunction or burning.
- Before touching a Unit, be sure to first touch a grounded metallic object in order to discharge any static built-up. Not doing so may result in malfunction or damage.
- When wiring crossovers between terminals, the total current for both terminals will flow in the line. Check the current capacities of all wires before wiring crossovers.
- The following precautions apply to Power Supply Units with Replacement Notification.
  - When the LED display on the front of the Power Supply Unit starts to alternately display “0.0” and “A02” or the alarm output automatically turns OFF, replace the Power Supply Unit within 6 months.
  - Separate the alarm output cables from power lines and high-voltage lines.
  - Do not apply a voltage or connect a load to the alarm output that exceeds the rated voltage or load.

- Maintain an ambient storage temperature of –20 to 30°C and humidity of 25% to 70% when storing the product for longer than 3 months to keep the replacement notification function in optimum working condition.
- Always use the standard installation method. A nonstandard installation will decrease heat dissipation, delay the replacement notification signal, and may degrade or damage the internal elements.

- Design the system so that the power supply capacity of the Power Supply Unit is not exceeded.
- Do not touch the terminals on the Power Supply Unit immediately after turning OFF the power supply. Electric shock may occur due to the residual voltage.

6 EC Directives

6-1 Applicable Directives

- EMC Directives
- Low Voltage Directive

6-2 Concepts

EMC Directives

OMRON devices that comply with EC Directives also conform to the related EMC standards so that they can be more easily built into other devices or the overall machine. The actual products have been checked for conformity to EMC standards (see the following note). Whether the products conform to the standards in the system used by the customer, however, must be checked by the customer.

EMC-related performance of the OMRON devices that comply with EC Directives will vary depending on the configuration, wiring, and other conditions of the equipment or control panel on which the OMRON devices are installed. The customer must, therefore, perform the final check to confirm that devices and the overall machine conform to EMC standards.

Note Applicable EMC (Electromagnetic Compatibility) standards are as follows:

EMS (Electromagnetic Susceptibility): EN61131-2
EMI (Electromagnetic Interference): EN61000-6-4
(Radiated emission: 10-m regulations)

Low Voltage Directive

Always ensure that devices operating at voltages of 50 to 1,000 VAC and 75 to 1,500 VDC meet the required safety standards for the PC (EN61131-2).

6-3 Conformance to EC Directives

The C200HX/C200HG/C200HE PCs comply with EC Directives. To ensure that the machine or device in which the C200HX/C200HG/C200HE PC is used complies with EC directives, the PC must be installed as follows:

1, 2, 3...

1. The C200HX/C200HG/C200HE PC must be installed within a control panel.
2. Reinforced insulation or double insulation must be used for the DC power supplies used for the communications and I/O power supplies.
3. C200HX/C200HG/C200HE PCs complying with EC Directives also conform to the Common Emission Standard (EN61000-6-4). Radiated emission characteristics (10-m regulations) may vary depending on the configuration of the control panel used, other devices connected to the control panel, wiring, and other conditions. You must therefore confirm that the overall machine or equipment complies with EC Directives.

6-4 Relay Output Noise Reduction Methods

The C200HX/C200HG/C200HE PCs conform to the Common Emission Standards (EN61000-6-4) of the EMC Directives. However, the noise generated when the PC is switched ON or OFF using the relay output may not satisfy these standards. In such a case, a noise filter must be connected to the load side or other appropriate countermeasures must be provided external to the PC.

Countermeasures taken to satisfy the standards vary depending on the devices on the load side, wiring, configuration of machines, etc. Examples of countermeasures for reducing the generated noise are given on page 137.

Countermeasures

(Refer to EN61000-6-4 for more details.)

Countermeasures are not required if the frequency of load switching for the whole system with the PC included is less than 5 times per minute.

Countermeasures are required if the frequency of load switching for the whole system with the PC included is 5 times or more per minute.

SECTION 1
Introduction

This section provides general information about Programmable Controllers (PCs) and how they fit into a Control System.

1-1 What is a Control System? 2
1-2 The Role of the PC 4
1-2-1 Input Devices 4
1-2-2 Output Devices 4
1-3 How Does a PC Work? 5

1-1 What is a Control System?

A Control System is the electronic equipment needed to control a particular process. It may include everything from a process control computer, if one is used, to the factory computer, down through the PCs (and there may be many of them networked together) and then on down through the network to the control components: the switches, stepping motors, solenoids, and sensors which monitor and control the mechanical operations.

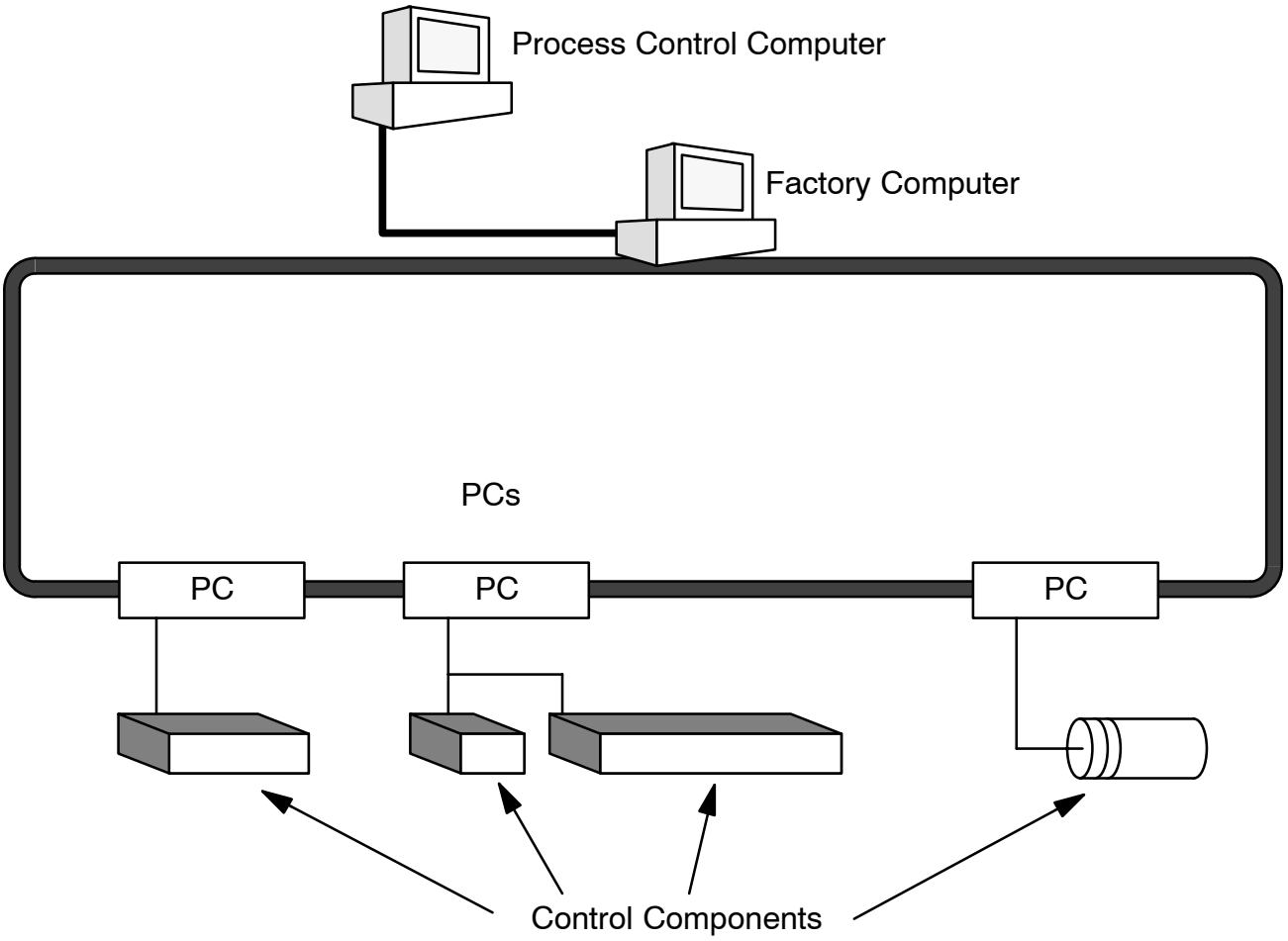

A Control System can involve very large applications where many different models of PC are networked together or it could be an application as small as a single PC controlling a single output device.

A Position Control System

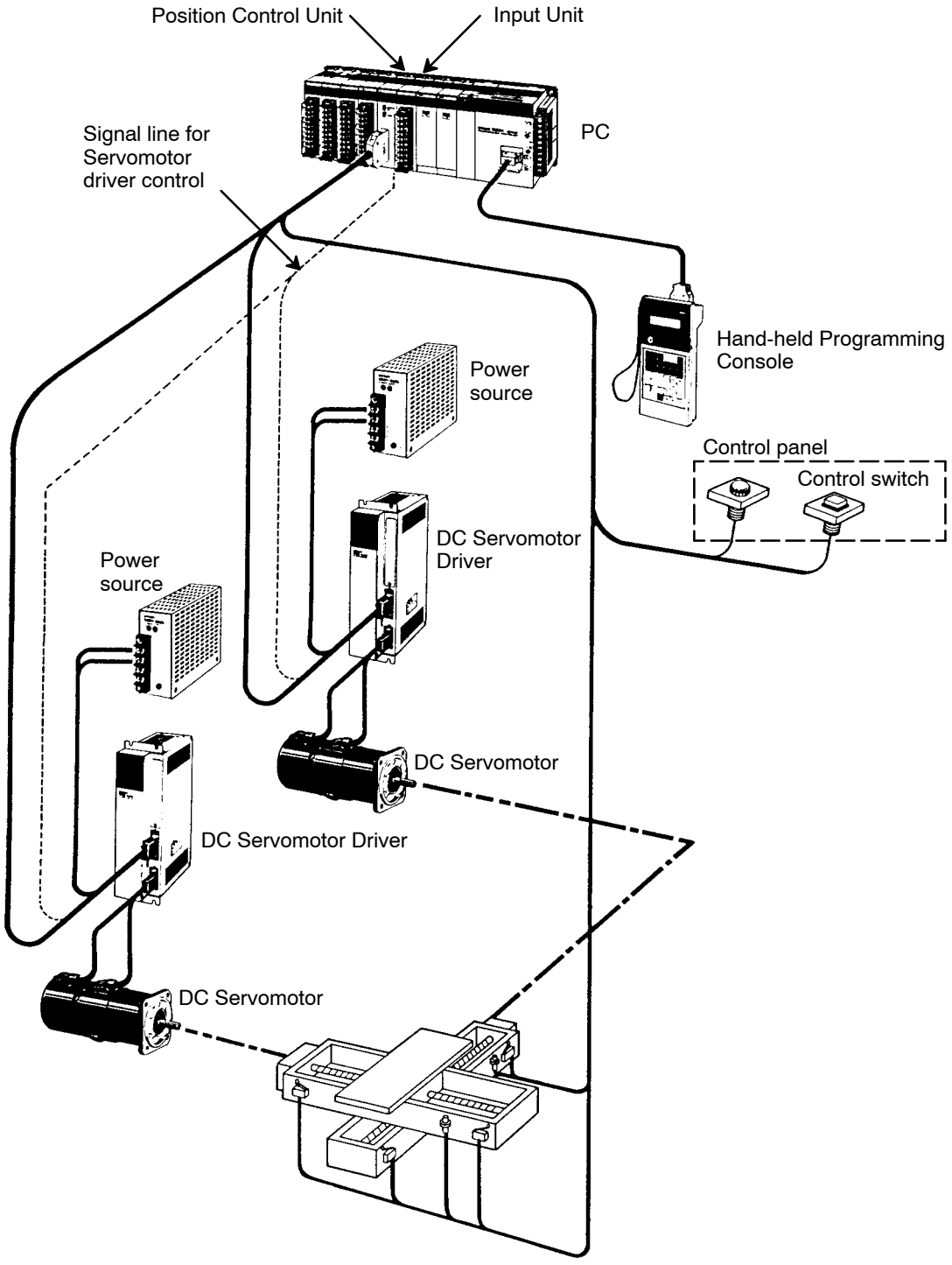

In the typical Control System example shown above, a PC controls the movement of the workpiece bed across two horizontal axes using Limit Switches and Servomotors to monitor and control movement.

1-2 The Role of the PC

The Programmable Controller, or PC, is the part of the Control System that directly controls the manufacturing process. According to the program stored in its memory, the PC accepts data from the input devices connected to it, and uses this data to monitor the controlled system. When the program calls for some action to take place, the PC sends data to the output devices connected to it, to cause that action to take place. The PC may be used to control a simple, repetitive task, or it may be connected to other PCs, or to a host computer in order to integrate the control of a complex process.

1-2-1 Input Devices

PCs can receive input from either automated or manual devices. The PC could receive data from the user via a pushbutton switch, keyboard, or similar device. Automated input could come from a variety of devices: microswitches, timers, encoders, photosensors, and so on. Some devices, like the Limit Switch shown below, turn ON or OFF when the equipment actually makes contact with it. Other devices, like the Photoelectric Switch and Proximity Switch shown below, use other means, such as light or inductance, in order to get information about the equipment being monitored.

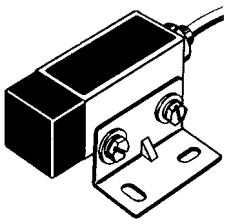

Photoelectric switch

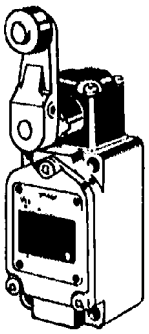

Limit switch

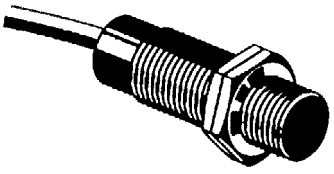

Proximity switch

1-2-2 Output Devices

A PC can output to a myriad of devices for use in automated control. Almost anything that you can think of could be controlled (perhaps indirectly) by a PC. Some of the most common devices are motors, Solenoids, Servomotors, Stepping Motors, valves, switches, indicator lights, buzzers, and alarms. Some of these output devices; such as the motors, Solenoids, Servomotors, Stepping Motors,

and valves; affect the controlled system directly. Others; such as the indicator lights, buzzers, and alarms; provide output to notify personnel.

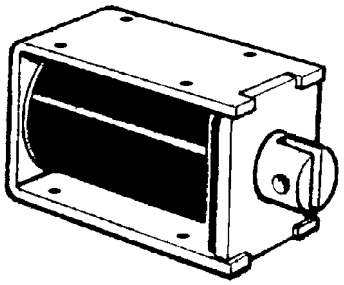

Solenoid

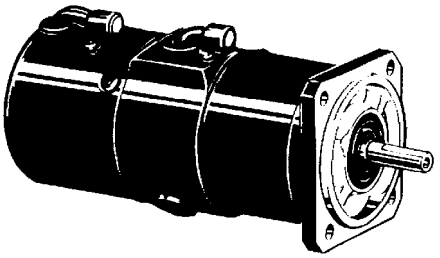

Servomotor

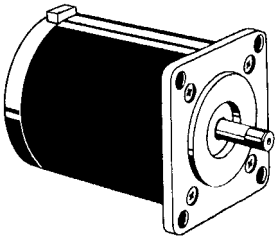

Stepping motor

1-3 How Does a PC Work?

PCs operate by monitoring input signals and providing output signals. When changes are detected in the signals, the PC reacts, through the user-programmed internal logic, to produce output signals. The PC continually scans the program in its memory to achieve this control.

Block Diagram of PC

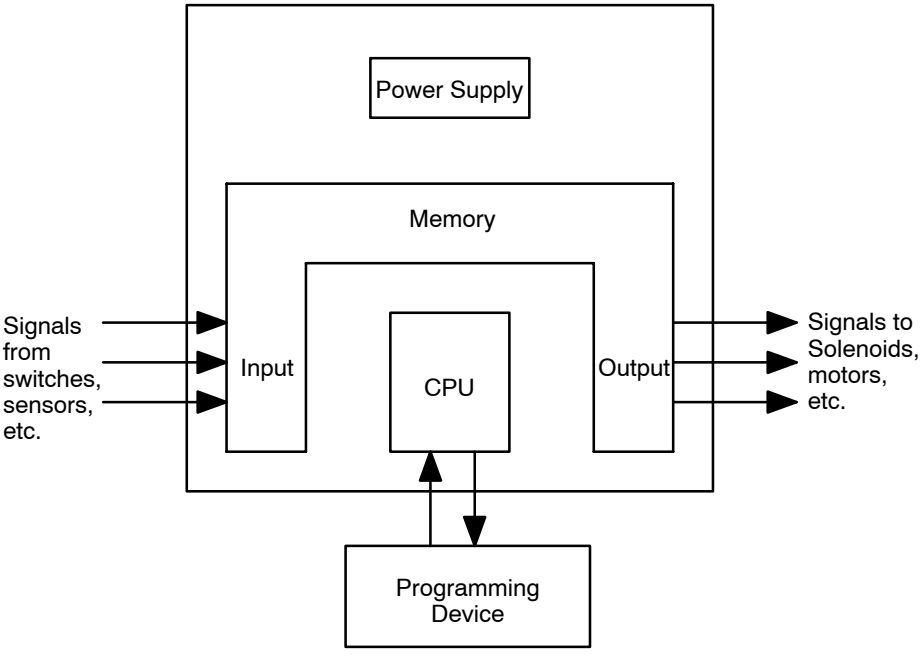

A program for your applications must be designed, and stored in the PC. This program is then executed as part of the cycle of internal operations of the PC.

Cycle

When a PC operates, that is, when it executes its program to control an external system, a series of operations are performed inside the PC. These internal operations can be broadly classified into the following four categories:

1, 2, 3...

1. Common (or overseeing) processes, such as watchdog timer operation and testing the program memory.
2. Data input and output.
3. Instruction execution.
4. Peripheral device servicing.

Cycle Time

The total time required for a PC to perform all these internal operations is called the cycle time. The flowchart and diagram on the following page illustrate these internal operations for a typical PC.

Timing is one of the most important factors in designing a Control System. For accurate operations, it is necessary to have answers to such questions as these:

- How long does it take for the PC to execute all the instructions in its memory?
- How long does it take for the PC to produce a control output in response to a given input signal?

The cycle time of the PC can be automatically calculated and monitored, but it is necessary to have an understanding of the timing relationships within the PC for effective system design and programming.

Flowchart of CPU Operation

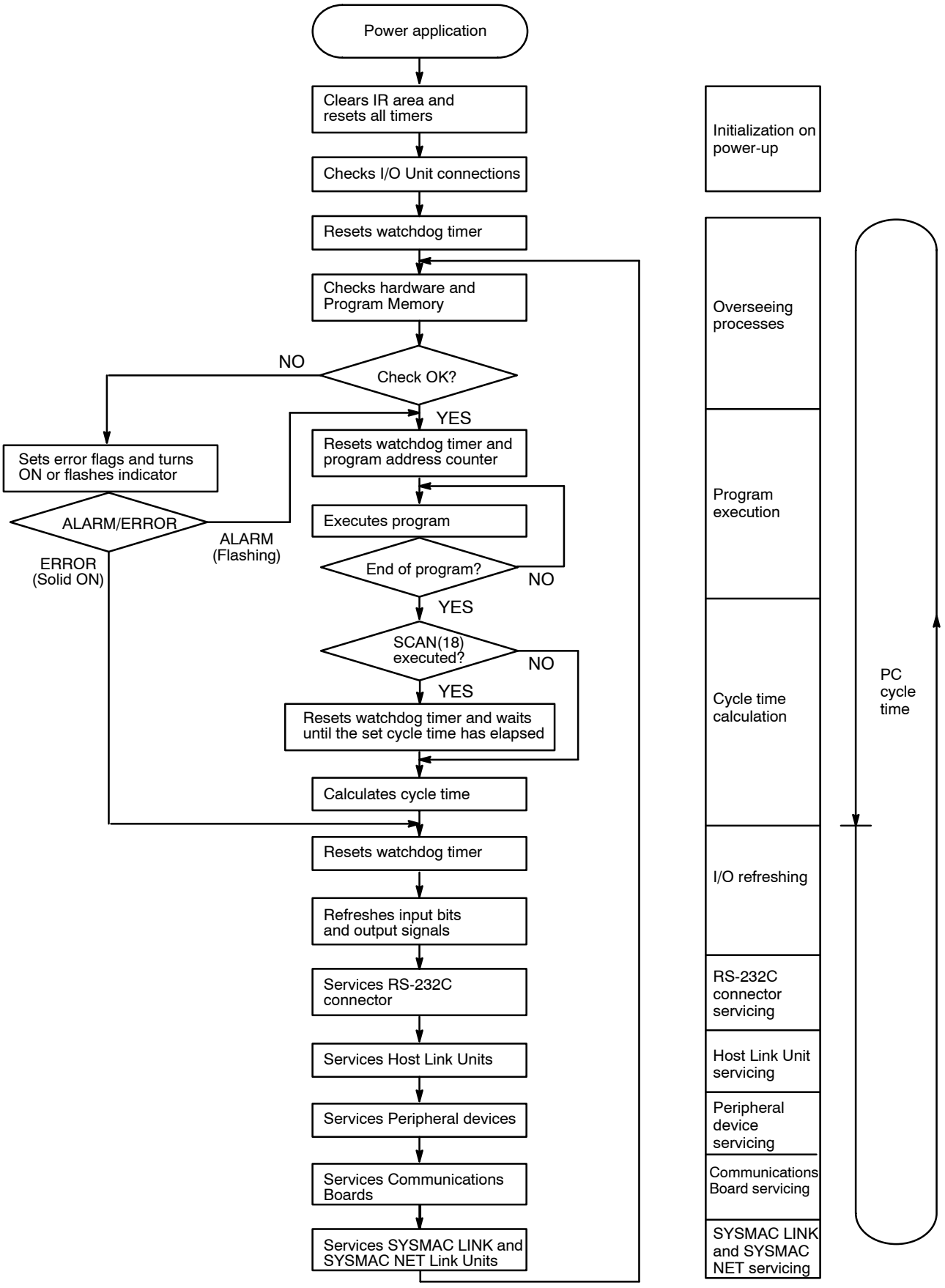

SECTION 2
System Configuration and Units

This section describes the system configuration used for the C200HX/C200HG/C200HE PCs and the individual Units used in the system configuration.

2-1 Basic Configuration 10
2-1-1 CPU Rack 10
2-1-2 Expansion I/O Racks 13
2-1-3 I/O Connecting Cable 14
2-2 Units 14
2-2-1 CPU Units 14
2-2-2 Memory Cassettes 17
2-2-3 Communications Boards 18
2-2-4 Power Supply Units 19
2-2-5 Backplanes 24
2-2-6 Standard I/O Units 25
2-2-7 Group-2 High-density I/O Units 27
2-2-8 High-density I/O Units Classified as Special I/O Units 30
2-3 Peripheral Devices 31
2-3-1 Programming Consoles 31
2-3-2 CX-Programmer 32
2-4 Expanded System Configurations 33
2-4-1 Required Mounting Conditions 33
2-4-2 Special I/O Units 33
2-4-3 Link Systems and Networks 40

2-1 Basic Configuration

The basic configuration of the PC is shown below. With the C200HX/C200HG/C200HE, up to two or up to three Expansion I/O Racks (depending on the CPU Unit) can be connected to the CPU Rack, depending on the number of I/O points required in the system.

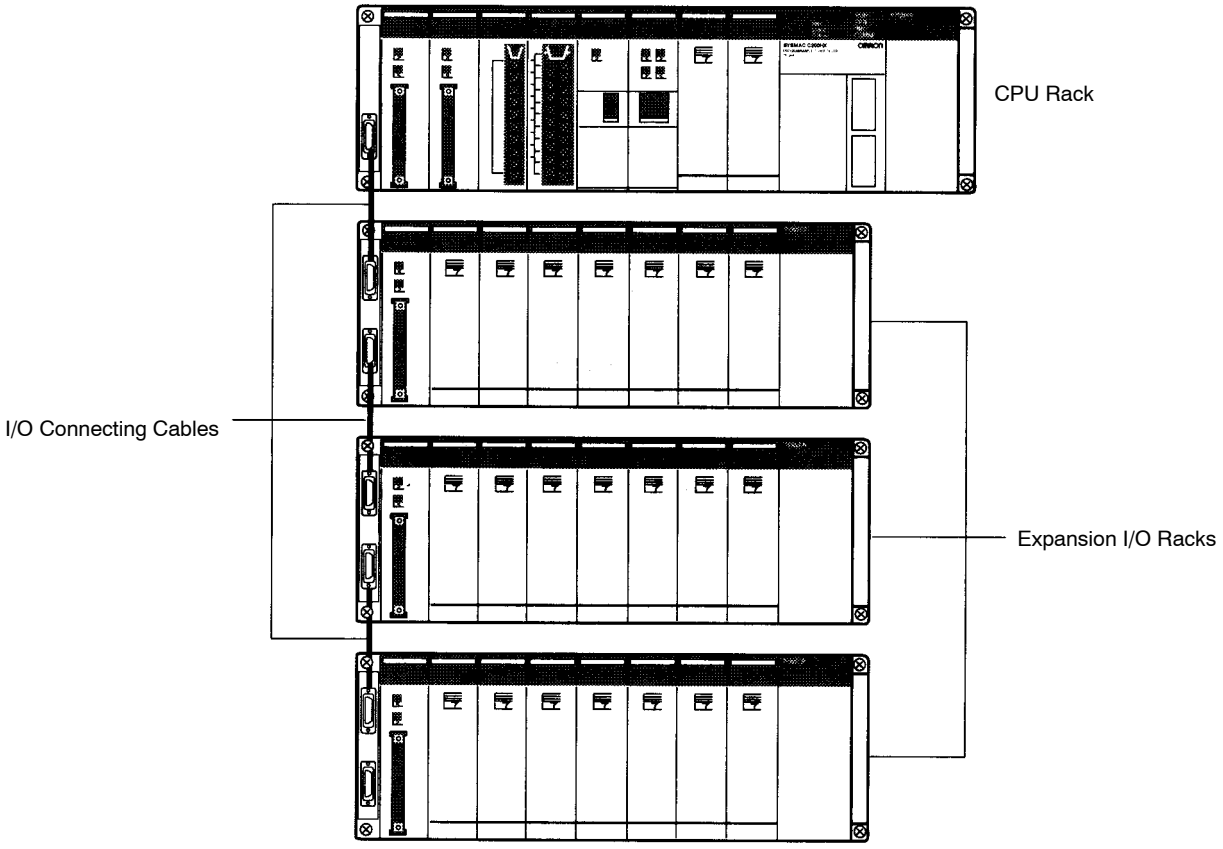

2-1-1 CPU Rack

An example of a CPU Rack is shown below. The CPU Rack consists of a CPU Backplane, CPU Unit, Power Supply Unit, I/O Units, and other special Units.

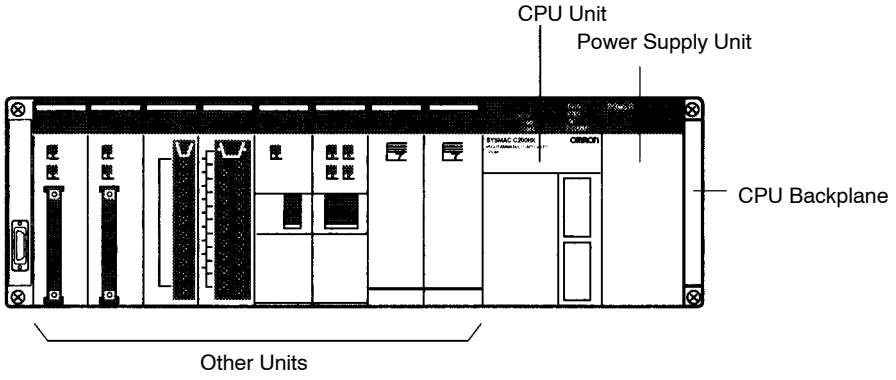

Power Supply Units

The Power Supply Unit supplies power to the CPU Rack. The Power Supply Units listed in the following table are available. Refer to *2-2-4 Power Supply Units* for further details.

Model	Supply voltage	Remarks
C200HW-PA204	100 to 240 VAC (wide range) (*1)	---
C200HW-PA204C		Equipped with replacement notification function.
C200HW-PA204R (*2)		Equipped with RUN output contacts.
C200HW-PA204S	100 to 120 VAC, 200 to 240 VAC	Provides 24 VDC output contacts.
C200HW-PA209R (*2)		Equipped with RUN output contacts.
C200HW-PD024	24 VDC	---
C200HW-PD025		---

Note

1. The power supply voltage for C200HW–PA204 Power Supply Units manufactured before March 2010 and C200HW–PA204R Power Supply Units manufactured before May 2010 is 100 to 120 V AC/200 to 240 V AC (switched using short bar). For details on the differences between these Units, refer to *Unit Differences by Manufacturing Date (Reference Information) on page 237*
2. The C200HW-PA204R/PA209R cannot be used with all combinations of CPU Units and Backplanes. Refer to page 23, *Restrictions for the C200HW-PA204R/PA209R*, for details.

CPU Units

The CPU Units listed in the following tables are available. Refer to *2-2-1 CPU Units* for further details on the CPU Units.

Model	User program memory	Data memory	Extended data memory (EM)	Instruction processing time (basic instructions)	Max. real I/O points supported	Max. No. of Expansion I/O Racks
C200HE-CPU11-E/ZE	3.2K words	4K words	---	0.3 µs min.	640 points	2 Racks
C200HE-CPU32-E/ZE	7.2K words	6K words	---	0.3 µs min.	880 points	2 Racks
C200HE-CPU42-E/ZE	7.2K words	6K words	---	0.3 µs min.	880 points	2 Racks
C200HG-CPU33-E/ZE	15.2K words	6K words	6K words	0.15 µs min.	880 points	2 Racks
C200HG-CPU43-E/ZE	15.2K words	6K words	6K words	0.15 µs min.	880 points	2 Racks
C200HG-CPU53-E/ZE	15.2K words	6K words	6K words	0.15 µs min.	1,184 points	3 Racks
C200HG-CPU63-E/ZE	15.2K words	6K words	6K words	0.15 µs min.	1,184 points	3 Racks
C200HX-CPU34-E/ZE	31.2K words	6K words	6K words x 3 (18K words)	0.1 µs min.	880 points	2 Racks
C200HX-CPU44-E/ZE	31.2K words	6K words	6K words x 3 (18K words)	0.1 µs min.	880 points	2 Racks
C200HX-CPU54-E/ZE	31.2K words	6K words	6K words x 3 (18K words)	0.1 µs min.	1,184 points	3 Racks
C200HX-CPU64-E/ZE	31.2K words	6K words	6K words x 3 (18K words)	0.1 µs min.	1,184 points	3 Racks
C200HX-CPU65-ZE	63.2K words	6K words	6K words x 8 (48K words)	0.1 µs min.	1,184 points	3 Racks
C200HX-CPU85-ZE	63.2K words	6K words	6K words x 16 (96K words)	0.1 µs min.	1,184 points	3 Racks

Model	Max. No. of Group-2 High-density I/O Units (see note 1)	64-point Units (see note 2)	Max. No. of Special I/O Units (see note 3)	RS-232C	Clock (RTC)	Communications Board
C200HE-CPU11-E/ZE	Not supported	Not supported	10 Units	No	No	No
C200HE-CPU32-E/ZE	10 Units	5 Units	10 Units	No	Yes	Yes
C200HE-CPU42-E/ZE	10 Units	5 Units	10 Units	Yes	Yes	Yes
C200HG-CPU33-E/ZE	10 Units	5 Units	10 Units	No	Yes	Yes
C200HG-CPU43-E/ZE	10 Units	5 Units	10 Units	Yes	Yes	Yes
C200HG-CPU53-E/ZE	16 Units	8 Units	16 Units	No	Yes	Yes
C200HG-CPU63-E/ZE	16 Units	8 Units	16 Units	Yes	Yes	Yes
C200HX-CPU34-E/ZE	10 Units	5 Units	10 Units	No	Yes	Yes
C200HX-CPU44-E/ZE	10 Units	5 Units	10 Units	Yes	Yes	Yes
C200HX-CPU54-E/ZE	16 Units	8 Units	16 Units	No	Yes	Yes
C200HX-CPU64-E/ZE	16 Units	8 Units	16 Units	Yes	Yes	Yes
C200HX-CPU65-ZE	16 Units	8 Units	16 Units	Yes	Yes	Yes
C200HX-CPU85-ZE	16 Units	8 Units	16 Units	Yes	Yes	Yes

Note

1. Group-2 High-density I/O Units can be used on the CPU Rack or Expansion I/O Rack under the C200H□-CPU□□-(Z)E. They cannot be used on Slave Racks.
2. Each 64 I/O Unit is treated as two Units.
3. Special I/O Units like the C200H-NC211 that are allocated the words for two Units are treated as two Units.
4. Unit number settings for Group-2 Units for the following CPU Units must be between 0 and 9:

   C200HE-CPU32/42-E/ZE
   C200HG-CPU33/43-E/ZE
   C200HX-CPU34/44-E/ZE
5. Group-2 High-density I/O Units cannot be used with the C200HE-CPU11-E.

CPU Backplane

The CPU Backplane is required to mount the CPU Unit and other Units composing the CPU Rack. The following CPU Backplanes are available depending on the number of slot required for Units. Refer to *2-2-5 Backplanes* for further details.

Model	Number of slots
C200HW-BC031	3
C200HW-BC051	5
C200HW-BC081-V1	8
C200HW-BC101-V1	10

Note When using the C200HW-PA209R Power Supply Unit with an 8-slot or 10-slot CPU Backplane or Expansion I/O Backplane, be sure to use the C200HW-BC081-V1 or C200HW-BC101-V1.

Other Units

The other Units that can be mounted to the CPU Rack include the Standard I/O Units, High-density I/O Units, and Special I/O Units.

2-1-2 Expansion I/O Racks

An example of an Expansion I/O Rack is shown in the following diagram. Expansion I/O Racks consist of and I/O Backplane, Power Supply Unit, I/O Units, and other Units. Expansion I/O Racks are connected to the CPU Rack to increase the number of I/O Units and other Units that can be used by the PC. You can connect up to 2 or up to 3 Expansion I/O Racks to a CPU Rack, the number depending on the CPU Unit that is used.

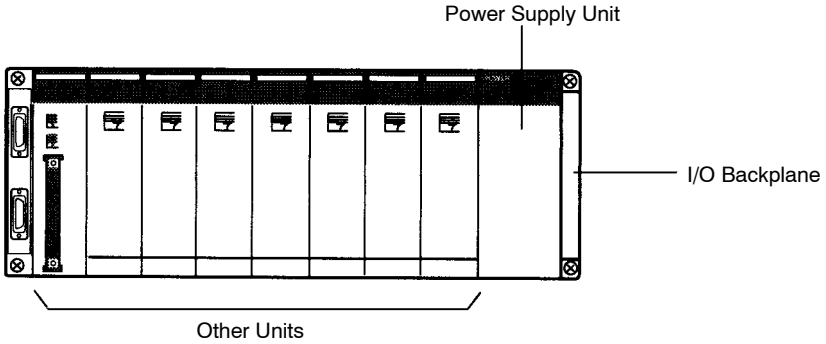

Power Supply Unit

The Power Supply Unit supplies power to the Expansion I/O Rack. The Power Supply Units listed in the following table are available. Refer to *2-2-4 Power Supply Units* for further details.

Model	Supply voltage	Remarks
C200HW-PA204	100 to 240 VAC (wide range) (*1)	---
C200HW-PA204C		Equipped with replacement notification function.
C200HW-PA204R (*2)		Equipped with RUN output contacts.
C200HW-PA204S	100 to 120 VAC, 200 to 240 VAC	Provides 24 VDC output contacts.
C200HW-PA209R (*2)		Equipped with RUN output contacts.
C200HW-PD024	24 VDC	---
C200HW-PD025		---

Note

1. The power supply voltage for C200HW–PA204 Power Supply Units manufactured before March 2010 and C200HW–PA204R Power Supply Units manufactured before May 2010 is 100 to 120 V AC/200 to 240 V AC (switched using short bar). For details on the differences between these Units, refer to *Unit Differences by Manufacturing Date (Reference Information) on page 237*
2. RUN output contacts cannot be used with Expansion I/O Racks.

I/O Backplane

The I/O Backplane is required to mount the Power Supply Unit and other Units composing the Expansion I/O Rack. The following I/O Backplanes are available depending on the number of slot required for Units. Refer to *2-2-5 Backplanes* for further details.

Model	Number of slots
C200HW-BI031	3
C200HW-BI051	5
C200HW-BI081-V1	8
C200HW-BI101-V1	10

Note When using the C200HW-PA209R Power Supply Unit with an 8 or 10-slot Backplane, be sure to use the C200HW-BC081-V1 or C200HW-BC101-V1.

Other Units

The other Units that can be mounted to an Expansion I/O Rack include the Standard I/O Units, High-density I/O Units, and Special I/O Units.

2-1-3 I/O Connecting Cable

The first Expansion I/O Rack is connected to the CPU Rack, and the second and third Expansion I/O Racks are connected to the previous Expansion I/O Rack through I/O Connecting Cable. There are five different lengths of cable available, which can be used as desired to provide the desired distance between each Rack. The sum of the lengths of all the I/O Connecting Cables connected within one PC, however, but be 12 m or less.

Model	Cable length
C200H-CN311	30 cm
C200H-CN711	70 cm
C200H-CN221	2 m
C200H-CN521	5 m
C200H-CN131	10 m

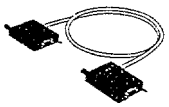

2-2 Units

2-2-1 CPU Units

The following diagram shows the components of the CPU Unit as viewed from the front cover. The numbers in the diagram correspond to the numbers of the following items in the description.

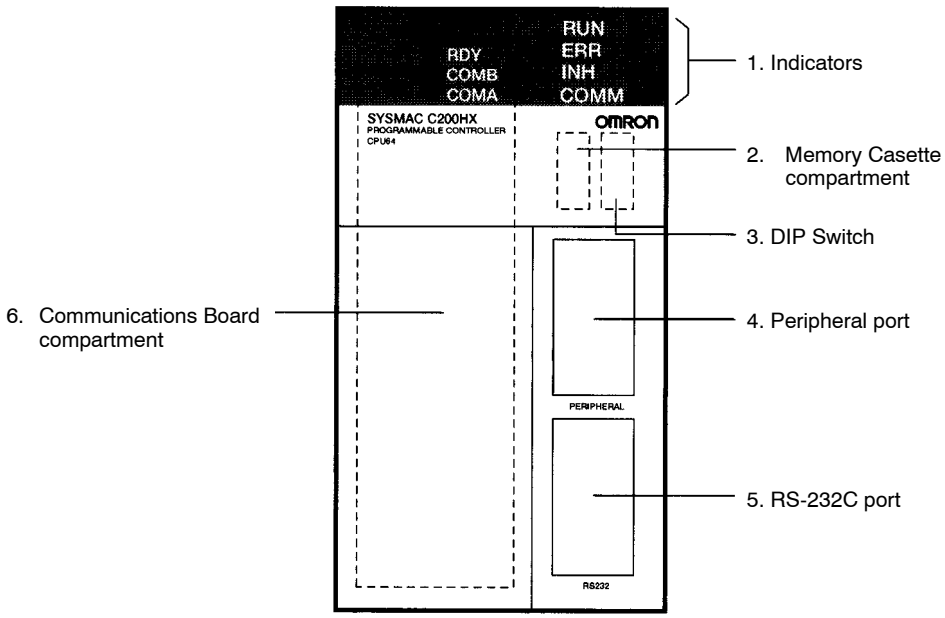

1, 2, 3... 1. **Indicators**

The indicators (LEDs) on the front cover of the CPU Unit operate as described in the following table.

LED	Contents
RUN (green)	Lights when the PC is operating normally in MONITOR or RUN mode.
ERR (red)	Flashes if an error occurs that does not stop the CPU Unit (a non-fatal error). Lights if an error occurs that stops the CPU Unit (a fatal error). If a fatal error occurs, the RUN indicator will turn OFF and the outputs from all Output Units will turn OFF.
INH (orange)	Lights when the Load OFF Bit (SR 25215) turns ON. If the Load OFF Bit is turned ON, the outputs from all Output Units will turn OFF.
COMM (orange)	Lights when the CPU Unit is communicating via the peripheral or RS-232C port.

2. **Memory Casette Compartment**

The Memory Cassette compartment contains the built-in RAM and can be used to mount an optional Memory Cassette. Refer to *3-1-8 Mounting Memory Cassettes* for the mounting methods.

3. **DIP Switch**
   The DIP switch is used to make various settings that determine who the PC will operate. The C200HX/C200HG/C200HE CPU Unit has a 6-pin DIP switch, as shown in the following diagram. The settings of these pins are listed in the following table.

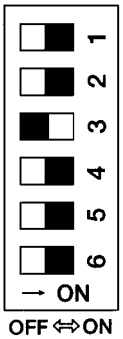

Pin no.	Setting	Function
1	ON	Writing disabled for user memory.
	OFF	Writing enabled for user memory.
2	ON	Contents of the Memory Cassette automatically read when power is turned on.
	OFF	Contents of the Memory Cassette not automatically read when power is turned on.
3	ON	Programming Console messages displayed in English.
	OFF	Programming Console messages displayed in the language stored in system ROM. (Messages displayed in Japanese with the Japanese version of system ROM.)
4	ON	Setting function for special instructions enabled.
	OFF	Setting function for special instructions disabled (default).
5	ON	Standard communications parameters (see note) will be set for the following serial communications ports. • Built-in RS-232C port • Peripheral port (only when a CQM1-CIF01/-CIF02 Cable is connected. Does not apply to Programming Console.) **Note** 1. Standard communications parameters are as follows: Serial communications mode: Host Link or peripheral bus; start bits: 1; data length: 7 bits; parity: even; stop bits: 2; baud rate: 9,600 bps 2. The CX-Programmer running on a personal computer can be connected to the peripheral port via the peripheral bus using the above standard communications parameters.
	OFF	The communications parameters for the following serial communications ports will be set in PC Setup as follows: • Built-in RS-232C port: DM 6645 and DM 6646 • Peripheral port: DM 6650 and DM 6651 **Note** When the CX-Programmer is connected to the peripheral port with the peripheral bus, either set bits 00 to 03 of DM 6650 to 0 Hex (for standard parameters), or set bits 12 to 15 of DM 6650 to 0 Hex and bits 00 to 03 of DM 6650 to 1 Hex (for Host Link or peripheral bus) separately.
6	ON	Expansion TERMINAL mode for the Programming Console; AR 0712: ON
	OFF	Console mode for the Programming Console; AR 0712: OFF

Note Only pin 3 is ON when the PLC is shipped.

4. **Peripheral Port**
   The peripheral port is connected to peripheral devices, such as the Programming Console.
5. **RS-232C Port**
   The RS-232C port is connected to external devices that support an RS-232C interface, such as personal computers.
6. **Communications Board Compartment**
   The Communications Board compartment is used to mount a Communica-

tions Board. Refer to *3-1-9 Mounting a Communications Board* for the mounting methods.

2-2-2 Memory Cassettes

Memory Cassettes can be optionally mounted to increase memory capacity over just the built-in RAM. There are two types of Memory Cassette available. These are shown in the following diagram.

EEPROM Memory Cassette

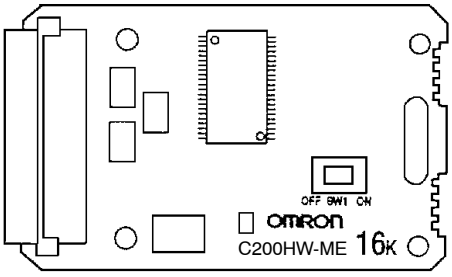

EPROM Memory Cassette

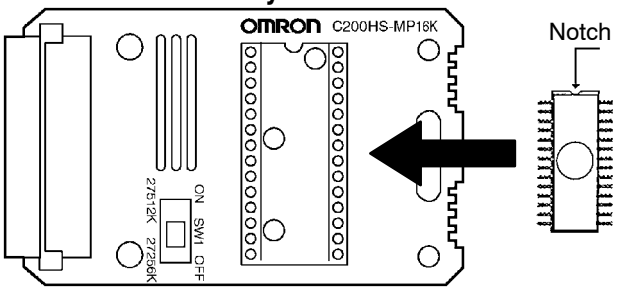

* ROM types 27256 and 27512, which are printed on the product, have same meanings as ROM types 27C256 and 27C512 respectively.

EEPROM Memory Cassette

When an EEPROM Memory Cassette is installed in the CPU Unit, the user memory (UM) and I/O data can be directly read and written. There is no need for a backup power supply. The Memory Cassette can also be removed from the CPU Unit and used for storing data.

Model	Capacity
C200HW-ME04K	4K words
C200HW-ME08K	8K words
C200HW-ME16K	16K words
C200HW-ME32K	32K words
C200HW-ME64K	64K words

Note The C200HW-ME64K can be used with the C200HX-CPU65-ZE/CPU85-ZE CPU Units only. It cannot be used with other CPU Units.

EPROM Memory Cassette

With an EPROM Memory Cassette, the program is written using a PROM Writer. The ROM is mounted to the Memory Casette and then installed in the CPU Unit. I/O data cannot be stored.

Model	Capacity
C200HS-MP16K	16K words/32K words

Memory Cassette Settings

EEPROM Memory Cassette

Set the DIP switch. For an EEPROM Memory Cassette, set pin no. 1 (write protect) to either ON or OFF. Setting it to ON will protect the program in the memory from being overwritten. Setting it to OFF will allow the program to be overwritten. (The factory setting is OFF.)

EPROM Memory Cassette

For an EPROM Memory Cassette, set pin no. 1 (ROM Type Selector) according to the type of ROM that is mounted.

Pin no. 1	ROM type	Model	Capacity	Access speed
OFF	Correction (Click)	ROM-JD-B	16K words	Correction (Click)
ON		ROM-KD-B	32K words	

2-2-3 Communications Boards

An optional Communications Board can be mounted in the CPU Unit to provide communications with the following types of devices/systems through the communications port: SYSMAC LINK Systems, SYSMAC NET Systems, personal computers, Programmable Terminals (PTs), bar code readers, temperature controllers, devices with RS-232C or RS-422 interfaces, etc.

The following Communications Boards are available.

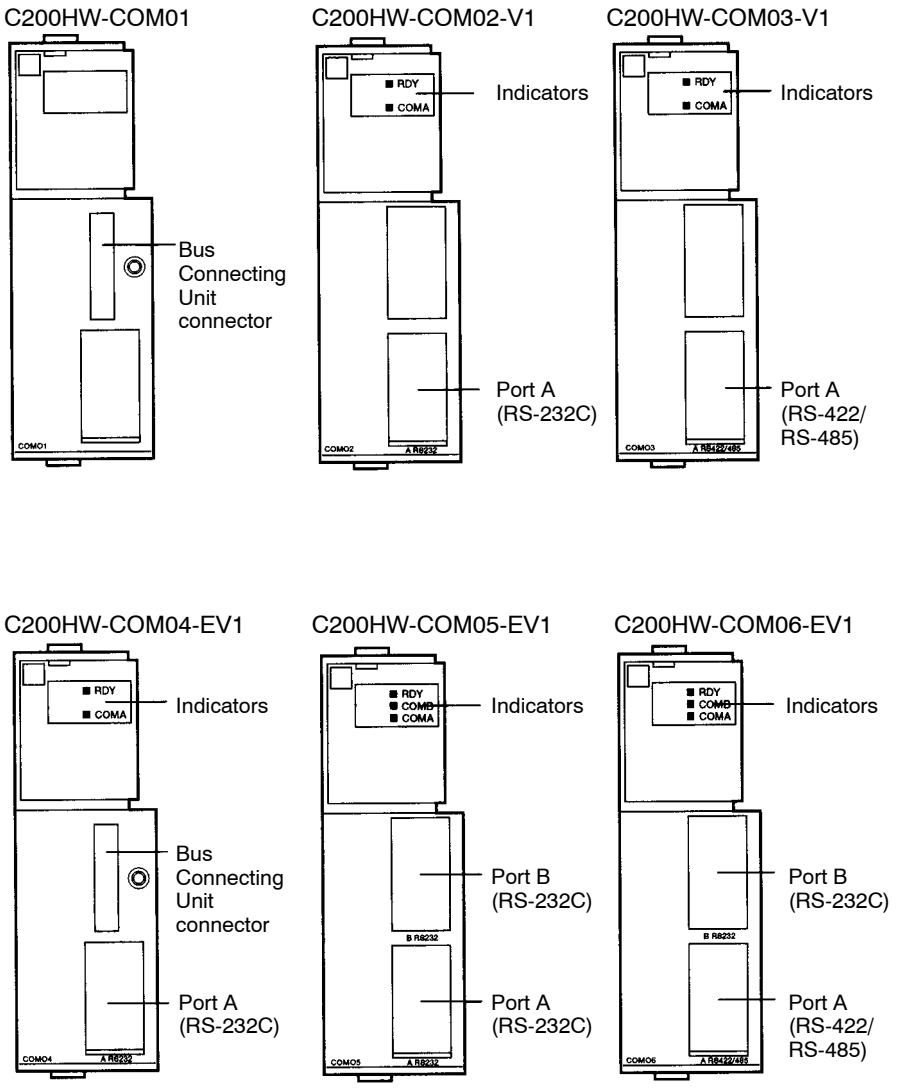

Model	Specifications
C200HW-COM01	Connection port for SYSMAC LINK, SYSMAC NET, or other Communications Units.
C200HW-COM02-V1	RS-232C port x 1
C200HW-COM03-V1	RS-422/485 port x 1
C200HW-COM04-EV1	Connection port for SYSMAC LINK, SYSMAC NET, or other Communications Units. RS-232C port x 1 (supports protocol macros)
C200HW-COM05-EV1	RS-232C port x 2 (supports protocol macros)
C200HW-COM06-EV1	RS-422/485 port x 1 (supports protocol macros) RS-232C port x 1 (supports protocol macros)

Note Use either the C200HW-COM01 or a V1 Communications Board for the ZE-version C200HX/HG/HE CPU Units.

Indicators (LEDs)

The Communications Board indicators on the front panel of the CPU Unit indicate the status of the Board, as described in the following table.

Indicator	Color	Status	Meaning
RDY	Green	Not lit	The Board cannot be used due to a hardware error on the Board.
		Flashing	A setting error has been discovered in the PC Setup or the protocol data.
		Lit	The Board is operating properly and communications are possible.
COMB	Orange	Flashing	Communications are in progress with the device connected to port B.
COMA	Orange	Flashing	Communications are in progress with the device connected to port A.

2-2-4 Power Supply Units

Power Supply Units provide power to the CPU Rack and the Expansion I/O Racks. Power Supply Units are available for either AC or DC power input. The numbers in the diagram correspond to the numbers of the following items in the description.

Part Names and Functions

- The following diagram shows the C200HW-PA204S.

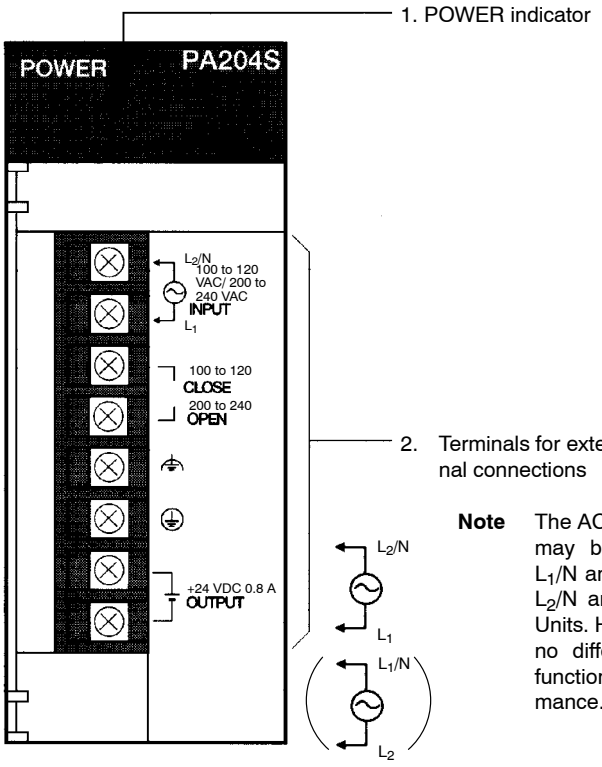

Note The AC input terminals may be indicated as L_1/N and L_2 instead of L_2/N and L_1 on some Units. However, there is no difference in their functions or performance.

• The following diagram shows the C200HW-PA204C.

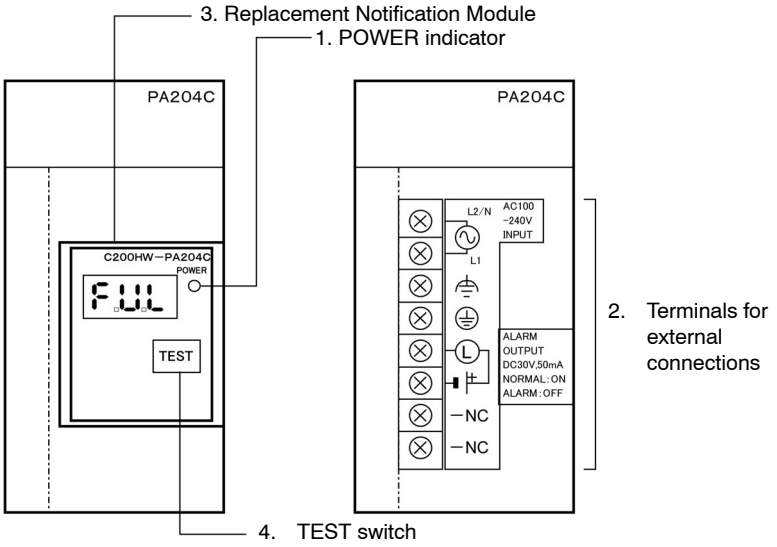

1, 2, 3...

1. **POWER Indicator**
   The POWER indicator will be lit whenever the Power Supply Unit is outputting 5 V.
2. **Terminals for External Connections**
   These terminals are connected as shown in the diagram below. The numbers in the diagram correspond to the numbers of the following items in the description.
3. **Replacement Notification Module (PA204C Only)**
   The seven-segment display on the Power Supply Unit indicates when replacement is required.
4. **TEST switch (PA204C Only)**
   The TEST switch can be used to temporarily turn OFF the alarm output that notifies when replacement is needed.

Model	Supply voltage	Output capacity (see note1)	Output terminals	RUN output	Replacement notification function
C200HW-PA204	100 to 240 VAC (wide range) (See note2)	5 VDC, 4.6 A, 26 VDC, 0.625 A, 30 W	Without	Without	Without
C200HW-PA204C			Without	Without	Display: Supported Output: Supported
C200HW-PA204R			Without	With	Without
C200HW-PA204S	100 to 120 VAC or 200 to 240 VAC (Select the voltage using the metal short bar on the voltage selector terminals.)	5 VDC, 4.6 A, 26 VDC, 0.625 A, 30 W	With 24 VDC, 0.8 A	Without	Without
C200HW-PA209R		5 VDC, 9 A, 26 VDC, 1.3 A, 45 W	Without	With	Without
C200HW-PD024	24 VDC	5 VDC, 4.6 A, 26 VDC, 0.625 A, 30 W	Without	Without	Without
C200HW-PD025	24 VDC	5 VDC, 5.3 A 26 VDC, 1.3 A, 40 W	Without	Without	Without

Note 1. The Power Supply Unit's internal parts may deteriorate or be damaged if the Unit is used outside the power supply output capacity range for a long period of time or if the output is short-circuited.

2. The power supply voltage for C200HW–PA204 Power Supply Units manufactured before March 2010 and C200HW–PA204R Power Supply Units manufactured before May 2010 is 100 to 120 V AC/200 to 240 V AC (switched using short bar). For details on the differences between these Units, refer to *Unit Differences by Manufacturing Date (Reference Information) on page 237*

Terminal Connections

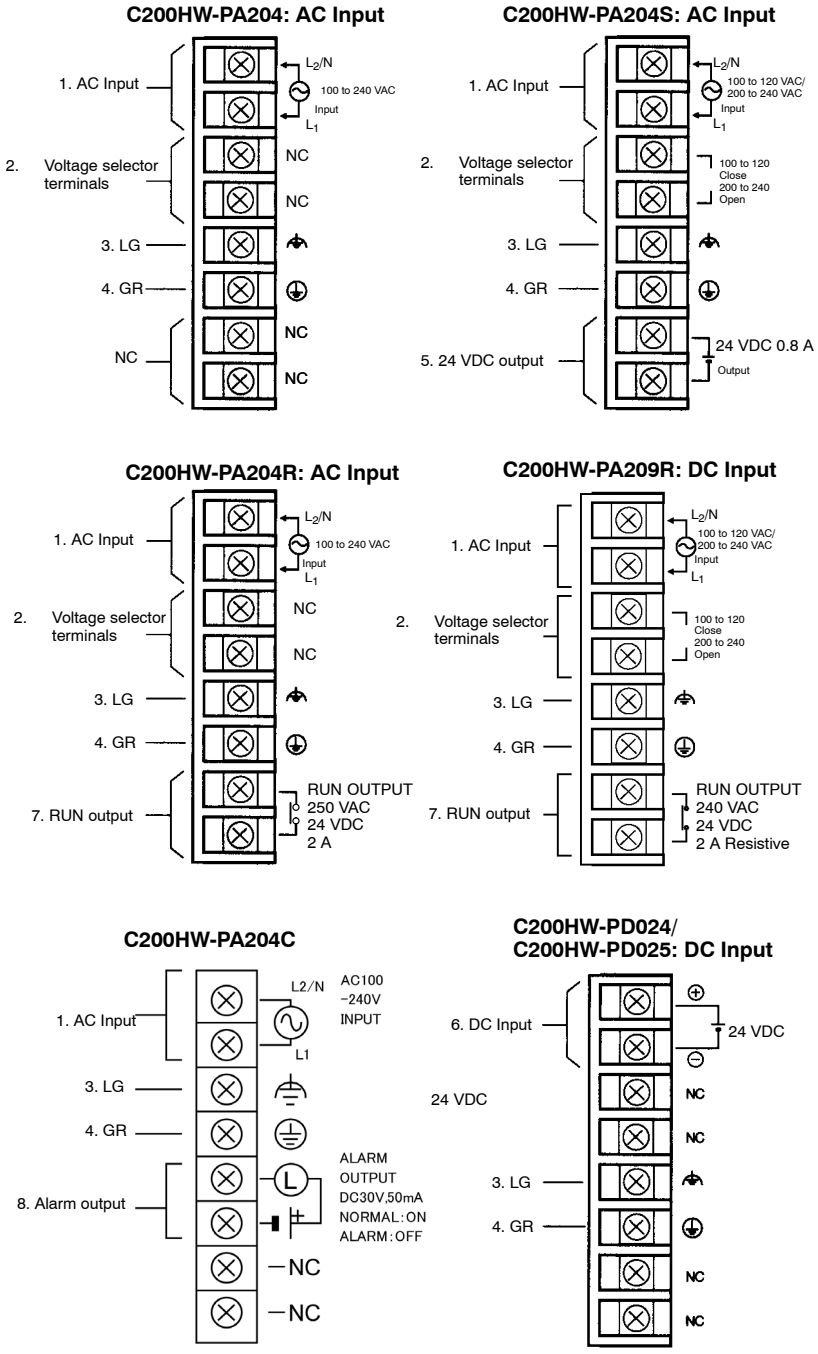

1, 2, 3... 1. **AC Input (C200HW-PA20□□ Only)**

Supply either 100 to 120 VAC or 200 to 240 VAC to the AC input terminals. If one power supply phase of the equipment is grounded, connect the grounded phase side to the L_2/N (or L_1/N if so indicated) terminal.

Supply 100 to 240 VAC to the C200HW-PA204, C200HW-PA204R, or C200HW-PA204C.

2. **Voltage Selector Terminals (C200HW-PA20□□ Only)**
   Short these terminals with a metal short bar when 100 to 120 VAC is being supplied to the AC input terminals.
   The C200HW-PA204, C200HW-PA204R, or C200HW-PA204C has a wide-range supply voltage, so voltage selector terminals are not provided.
3. **LG**
   Ground the LG terminal to 100 Ω or less to increase resistance to noise and protect against possible electrical shock.
4. **GR**
   Ground the GR terminal to 100 Ω or less to protect against possible electrical shock.
5. **24 VDC Output (C200HW-PA204S Only)**
   The 24 VDC output terminals can be used to supply power to DC Input Units. The combined power consumption for both 5 V and 24 V must be 30 W or less.
6. **DC Input (C200HW-PD024/PD025 Only)**
   Supply 24 VDC to the DC input terminals.
7. **RUN Output (C200HW-PA204R/PA209R Only)**
   The internal contact will turn ON when the CPU Unit is operating in RUN or MONITOR mode. These terminals are available only on the C200HW-PA204R.
8. **Alarm Output (PA204C Only)**
   The alarm output is used to notify when Power Supply Unit replacement is required. The output is normally ON. The output turns OFF when the time until replacement is 6 months or less.

Restrictions for the C200HW-PA204R/PA209R

Use the C200HW-PA204R/PA209R Power Supply Unit only with the following CPU Units and Backplanes. CPU Units and Backplanes with manufacturing numbers earlier than the ones given cannot be used.

CPU Units

Model	Manufacturing number (See below.)	
	Made in Japan	Made in the Netherlands
C200HX-CPU65-E	20Z6 or later	0147 or later
C200HX-CPU54-E	2817 or later	
C200HX-CPU44-E	19Z6 or later	
C200HX-CPU34-E	2417 or later	
C200HG-CPU63-E	25Z6 or later	
C200HG-CPU53-E	0817 or later	
C200HG-CPU43-E	19Z6 or later	
C200HG-CPU33-E	1017or later	
C200HE-CPU42-E	20Z6 or later	
C200HE-CPU32-E	19Z6 or later	
C200HE-CPU11-E	20Z6 or later	
C200HX/HG/HE-CPU□□-ZE	All models	

Backplanes (with C200HW-PA204R)

Model	Manufacturing number (See below.)	
	Made in Japan	Made in the Netherlands
C200HW-BC031	0617 or later	0147 or later
C200HW-BC051	19Z6 or later	
C200HW-BC081	24Z6 or later	
C200HW-BC101	20Z6 or later	

Backplanes (with C200HW-PA209R)

CPU Backplanes		I/O Backplanes	
C200HW-BC031	Same manufacturing number as for C200HW-PA204R.	C200HW-BI031	Same manufacturing number as for C200HW-PA204R.
C200HW-BC051		C200HW-BI051	
C200HW-BC081-V1 (-V1 or later)		C200HW-BI081-V1 (-V1 or later)	
C200HW-BC101-V1 (-V1 or later)		C200HW-BI101-V1 (-V1 or later)	

⚠ Caution When using the C200HW-PA209R Power Supply Unit, be sure to use only the Backplanes listed in the above table. Using a different Backplane may result in malfunction due to deterioration of the base or pattern burnout.

Note Manufacturing numbers are as shown in the following diagram.

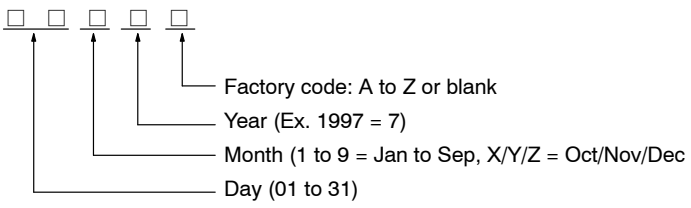

2-2-5 Backplanes

There are two types of Backplane: the CPU Backplane, used for the CPU Rack, and the I/O Backplane, used for Expansion I/O Racks. The Backplane serves to hold and connect the following types of Unit: the CPU Unit, the Power Supply Unit, I/O Units, Special I/O Units, etc.

The components of the Backplanes are shown in the following diagrams and described following them. The numbers in the diagram correspond to the numbers of the following items in the description.

CPU Backplane

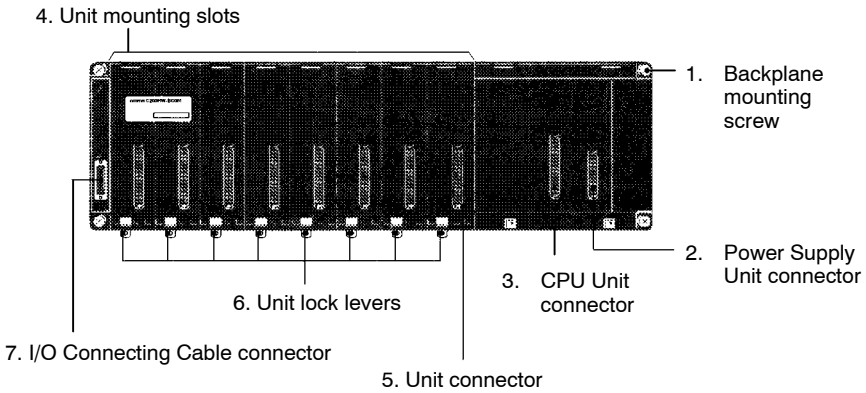

I/O Backplane

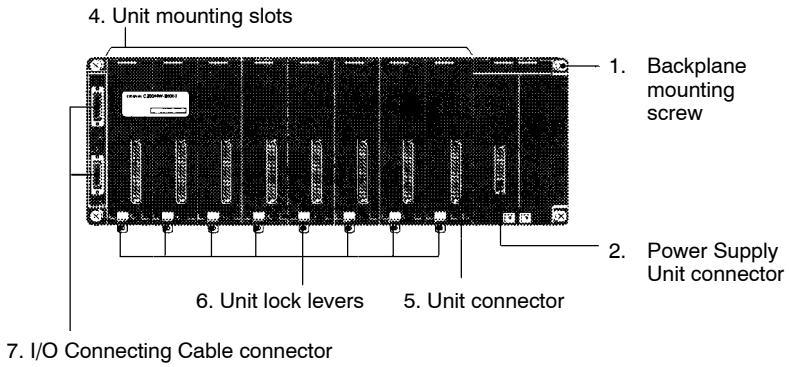

1, 2, 3...

1. **Backplane Mounting Screws**
   Mount the Backplane firmly using four M4 screws.
2. **Power Supply Unit Connector**
   Connect the Power Supply Unit.
3. **CPU Unit Connector**
   Connect the CPU Unit.
4. **Unit Mounting Slots**
   Mount one Unit to each slot. There are 3, 5, 8, or 10 slots available on the Backplane depending on the model of Backplane used.
5. **Unit Connectors**
   Connect I/O Units, Special I/O Units, Interrupt Input Units, and/or Analog Timer Units.

Note Attach a C500-COV01 Connector Cover to any slot that is not being used to prevent dust and dirt from entering the unused connectors.

6. **Unit Lock Levers**
   The lock levers hold the Units in place. Press down on the level and pull up on the Unit to release the lock.
7. **I/O Connecting Cable Connector**
   Connect the I/O Cable from the CPU Rack to the first Expansion I/O Rack or between adjacent Expansion I/O Racks to this connector.

2-2-6 Standard I/O Units

The following Standard I/O Units are available.

Input Units

Name	Model number	Specifications	No. of points
DC Input Unit	C200H-ID211	12 to 24 VDC	8 pts
	C200H-ID212	24 VDC	16 pts
AC Input Unit	C200H-IA121	100 to 120 VAC	8 pts
	C200H-IA122/IA122V	100 to 120 VAC	16 pts
	C200H-IA221	200 to 240 VAC	8 pts
	C200H-IA222/IA222V	200 to 240 VAC	16 pts
AC/DC Input Unit	C200H-IM211	12 to 24 VAC/DC	8 pts
	C200H-IM212	24 VAC/DC	16 pts

Note The C200H-ID001/002 cannot be used on the following Backplanes: C200HW-BC□□1/BI□□1.

Output Units

Name	Model number	Specifications	No. of points
Contact Output Unit	C200H-OC221	2 A, 250 VAC/24 VDC (For resistive loads)	8 pts
	C200H-OC222	2 A, 250 VAC/24 VDC (For resistive loads)	12 pts
	C200H-OC225	2 A, 250 VAC/24 VAC (For resistive loads)	16 pts
	C200H-OC223	2 A, 250 VAC/24 VDC (For resistive loads) Independent commons	5 pts
	C200H-OC224	2 A, 250 VAC/24 VDC (For resistive loads) Independent commons	8 pts
	C200H-OC222N	2 A, 250 VAC/24 VDC (For resistive loads)	12 pts
	C200H-OC226N	2 A, 250 VAC/24 VDC (For resistive loads)	16 pts
	C200H-OC224N	2 A, 250 VAC/24 VDC (For resistive loads) Independent commons	8 pts
Transistor Output Unit	C200H-OD411	1 A, 12 to 48 VDC	8 pts
	C200H-OD211	0.3 A, 24 VDC	12 pts
	C200H-OD212	0.3 A, 24 VDC	16 pts
	C200H-OD213	2.1 A, 24 VDC	8 pts
	C200H-OD214	0.8 A, 24 VDC; source type (PNP); with load short protection	8 pts
	C200H-OD216	5 to 24 VDC; source type (PNP)	8 pts
	C200H-OD217	5 to 24 VDC; source type (PNP)	12 pts
	C200H-OD21A	1.0 A, 24 VDC; source type (PNP); with load short protection	16 pts
Triac Output Unit	C200H-OA221	1 A, 250 VAC	8 pts
	C200H-OA222V	0.3 A, 250 VAC	12 pts
	C200H-OA223	1.2 A, 250 VAC	8 pts
	C200H-OA224	0.5 A, 250 VAC	12 pts

Optional Products

The following optional products are available for use with Standard I/O Units.

- I/O Unit Cover: C200H-COV11
  Cover for 10-pin terminal block.
- Space Unit: C200H-SP001
  Used for vacant slots.

Components

The Standard I/O Units come in three shapes; A-shape, B-shape, and E-shape. Refer to *Appendix D Specifications* for the dimensions of each Unit. The numbers in the diagram correspond to the numbers of the following items in the description.

A-shape I/O Unit (10-terminal Terminal Block) **B-shape I/O Unit (19-terminal Terminal Block)**

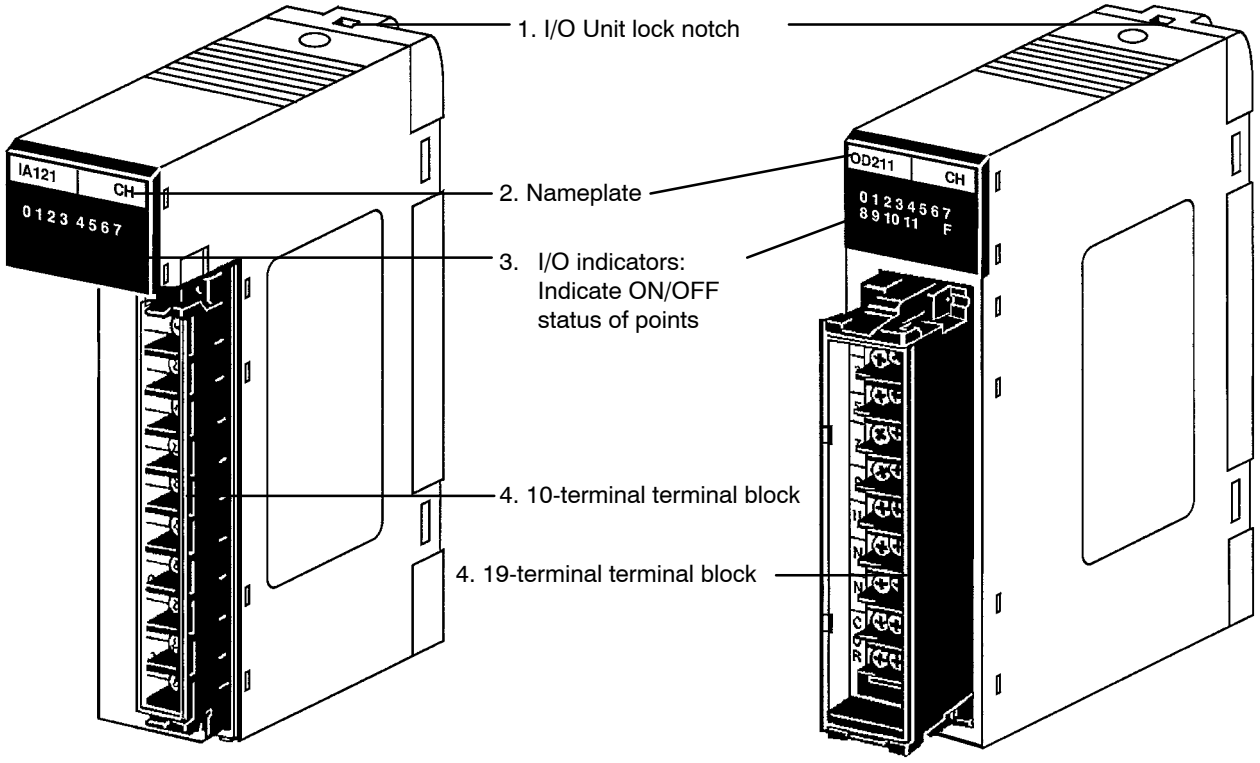

E-shape I/O Unit (10-terminal Terminal Block)

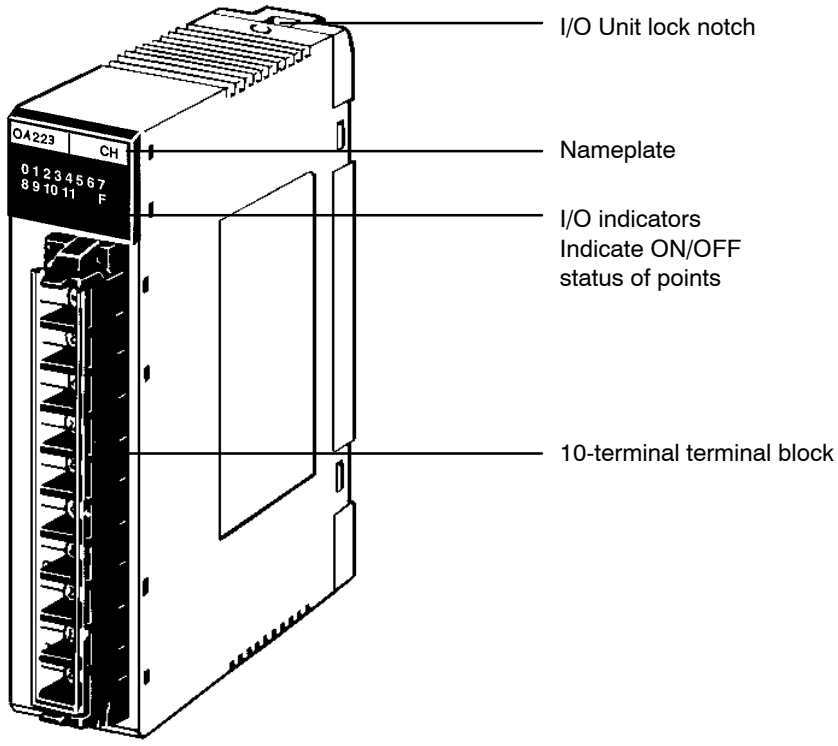

Note The C200H-OC226 is an extended B-shape I/O Unit and its dimensions are different from those of the B-shape I/O Unit shown above.

1, 2, 3...

1. **I/O Unit Lock Notch**
   The lock notch fits into the Backplane to hold the Unit in place.
2. **Nameplate**
   The nameplate shows the model number of the I/O Unit.
3. **I/O Indicators (LEDs)**
   The indicators show the ON/OFF status of the I/O points. The arrangement of the indicators varies with the model of I/O Unit, as shown in the following tables.
4. **Terminal Block**
   The terminal block is used to wiring I/O. There terminals blocks are removable and consist of two parts.

Units with 10-terminal Terminal Blocks

Appearance	Unit type	Model numbers
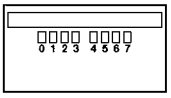	8-point Units	ID211, IM211, IA121, IA221, OC221, and OA216
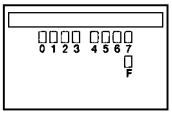	8-point Units F: Fuse burnt out (with LED)	OD213, OD411, OA221, and OA223
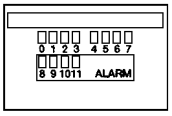	8-point Units ALARM indictors (with LEDs)	OD214
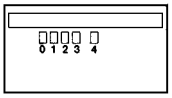	5-point Units	OD223

Units with 19-terminal Terminal Blocks

Appearance	Unit type	Model numbers
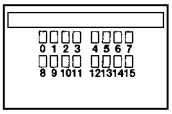	16-point Units	ID212, IA122, IA122V, IA222, IA222V, IM212, OC225, OC226N, OD212, and OD21A
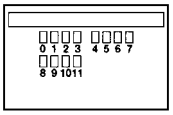	12-point Units	OC222, OC222N, OD211, OD217, OA222V, and OA224
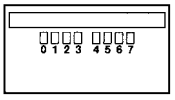	8-point Units	OC224 and OC224N

2-2-7 Group-2 High-density I/O Units

Group-2 High-density I/O Units come in two varieties; C-shape and D-shape. The shape of the two varieties is the same, but C-shape Units have only one connector, while the D-shape Units have two. C-shape Units have 32 I/O points and D-shape Units have 64 I/O points.

Group-2 High-density I/O Units can be used with C200H□-CPU□□-(Z)E CPU Racks and Expansion I/O Racks. They cannot be used with Slave Racks.

Unit	Specifications	Shape	Model
DC Input Unit	12 VDC; 64 pts	D	C200H-ID111
	24 VDC; 32 pts	C	C200H-ID217 C200H-ID218
	24 VDC; 64 pts	D	C200H-ID216 C200H-ID219
Transistor Output Unit	4.5 VDC,16 mA to 26.4 VDC,100 mA; 32 pts	C	C200H-OD218
	4.5 VDC,16 mA to 26.4 VDC,100 mA; 64 pts	D	C200H-OD219
	24 VDC, 0.5 A (5A/Unit); 32 pts	C	C200H-OD21B

- Group-2 High-density I/O Units can be used on the CPU Rack or Expansion I/O Rack under the C200H□-CPU□□-(Z)E. They cannot be used on Slave Racks.
- Group-2 High-density I/O Units cannot be used with the C200HE-CPU11-E.
- The unit number settings for the following CPU Units are from 0 to 9: C200HE-CPU32/42-(Z)E, C200HG-CPU33/43-(Z)E, and C200HX-CPU34/44-(Z)E.

C-shape Units (32-point Units)

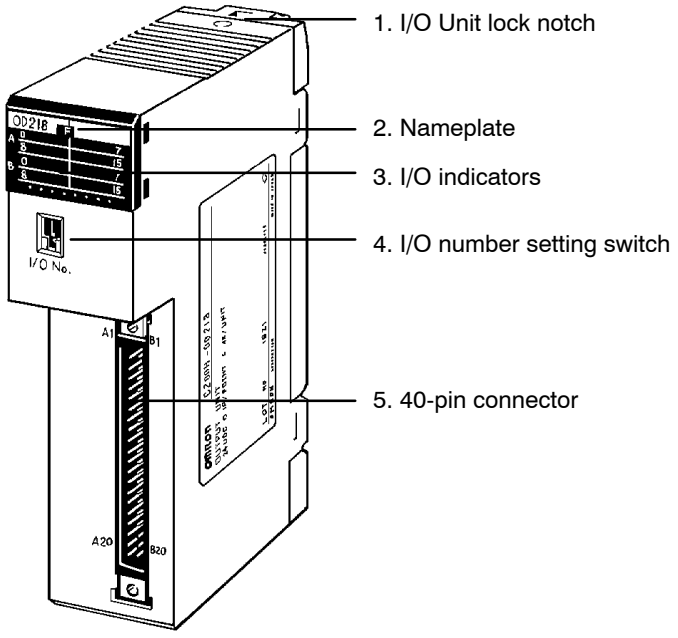

D-shape Units (64-point Units)

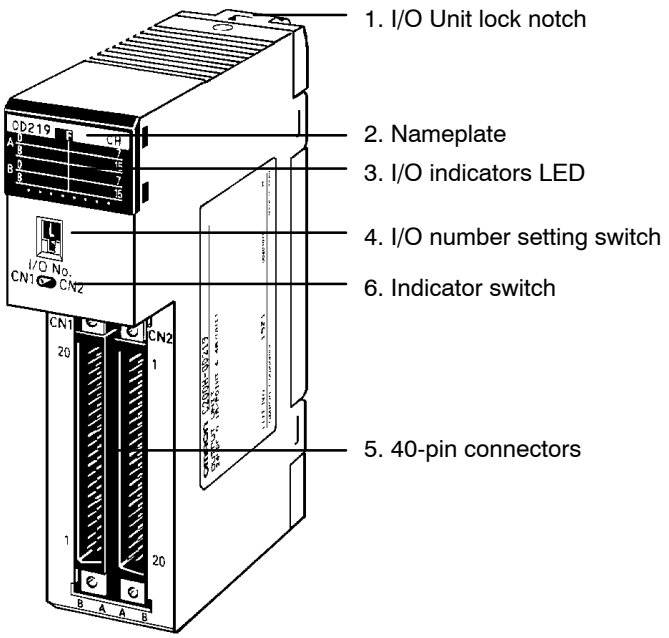

1, 2, 3...

1. **I/O Unit Lock Notch**
   The lock notch fits into the Backplane to hold the Unit in place.
2. **Nameplate**
   The nameplate shows the model number of the I/O Unit.
3. **I/O Indicators (LED)**
   The indicators show the ON/OFF status of the I/O points. The arrangement of the indicators varies with the model of I/O Unit, as shown in the following tables.
4. **I/O Number Setting Switch**
   This switch is used to set the I/O number for the Unit. Set the number to between 0 and F for Units with one 40-pin connector and to between 0 and 8 or A and E for Units with two 40-pin connectors.
5. **40-pin Connectors**
   The number of connectors depends on the Unit.
6. **Indicator Switch**
   Determines whether the status of connector 1 or connector 2 I/O points are shown on the I/O indicators.

I/O Indicators

Units with One 40-pin Connector

Appearance	Unit type	Model numbers
ID216 A 0 7 8 15 B 0 7 8 15	32 points Unit	ID216 and ID218
OD218 F A 0 7 8 15 B 0 7 8 15	32 points Unit F: Fuse burnt out (with LED)	OD218 and OD21B

Units with Two 40-pin Connectors

Appearance	Unit type	Model numbers
ID217 A 0 7 8 15 B 0 7 8 15	64 points Unit	ID111, ID217, and ID219
OD219 F A 0 7 8 15 B 0 7 8 15	64 points Unit F: Fuse burnt out (with LED)	OD219

2-2-8 High-density I/O Units Classified as Special I/O Units

Some High-density I/O Units are classified as Special I/O Units. Up to 10 or up to 16 Special I/O Units can be connected to a PC depending on the CPU Unit that is used. These Units have two 24-pin connectors. In general, these Units control 32 I/O points, although some Units can control 128 I/O points when set for dynamic operation.

Refer to *Appendix B Specifications* for detailed specifications and dimensions of the Units.

Unit	Model Number	Specifications
TTL Input Unit	C200H-ID501	5 VDC, 32 inputs
DC Input Unit	C200H-ID215	24 VDC; 32 inputs
TTL Output Unit	C200H-OD501	5 VDC, 32 outputs
Transistor Output Unit	C200H-OD215	24 VDC; 32 outputs
TTL I/O Unit	C200H-MD501	5 VDC, 16 inputs, 16 outputs
DC Input/Transistor Output Unit	C200H-MD115	12 VDC; 16 inputs, 16 outputs
	C200H-MD215	24 VDC; 16 inputs, 16 outputs

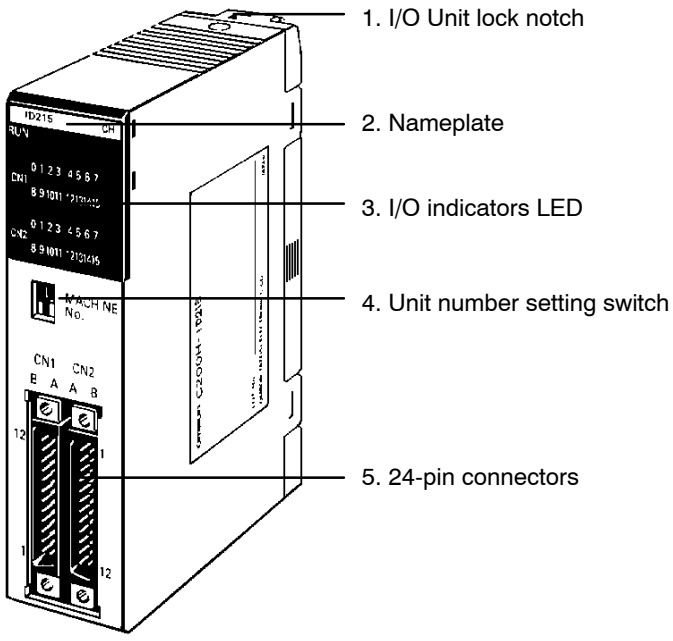

1, 2, 3...

1. **I/O Unit Lock Notch**
   The lock notch fits into the Backplane to hold the Unit in place.
2. **Nameplate**
   The nameplate shows the model number of the Unit.

3. **I/O Indicators (LED)**
   The indicators show the ON/OFF status of the I/O points.
4. **Unit Number Setting Switch**
   Turn OFF the power supply to the PC and set the unit number to between 0 and F using a flat-blade screwdriver, being careful not to damage the slot or leave the switch set half-way between two settings.
5. **24-pin Connectors**
   There are two 24-pin connectors.

2-3 Peripheral Devices

There are various Peripheral Devices that can be use to support C200HX/C200HG/C200HE operation. These Peripheral Devices are introduced in this section.

2-3-1 Programming Consoles

There are two Programming Consoles that can be used with the C200HX/C200HG/C200HE: the C200H-PRO27-E and the CQM1-PRO01-E. The following illustration shows the C200H-PRO27-E Programming Console.

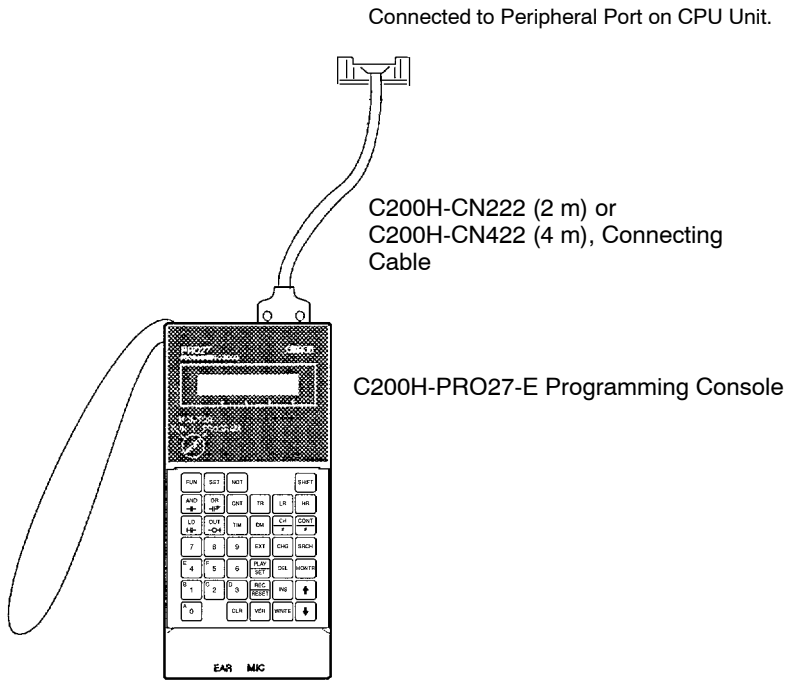

As shown in the illustration, the C200H-PRO27-E Programming Console connects to the C200HX/C200HG/C200HE CPU Unit with C200H-CN222 or C200H-CN422 Connecting Cable, which must be purchased separately.

The CQM1-PRO01-E Programming Console comes with 2 m of Connecting Cable.

2-3-2 CX-Programmer

The CX-Programmer is a Programming Device that runs on Windows. It is used for full-scale programming operations. Use the following Connecting Cables to connect the computer running the CX-Programmer with the C200HX/HG/HE(-Z) PCs.

Connecting Cables for C200HX/HG/HE(-Z) PCs

Unit	Unit port	Computer	Computer port	Network type	Model	Length	Remarks
CPU Unit	Built-in peripheral port	IBM PT/AT or compatible	D-Sub, 9-pin male	Peripheral bus or SYSWAY	CQM1-CIF02	3.3 m	---
	Built-in RS-232C port D-Sub, 9-pin, female	IBM PT/AT or compatible	D-Sub, 9-pin male	SYSWAY	XW2Z-200S-CV/500S-CV	2 m/5 m	ESD (electrostatic discharge) countermeasures
					XW2Z-200S-V/500S-V	2 m/5 m	---
Host Link Unit (See note.) (C200H-LK201-V1)	RS-232C port, D-Sub, 25-pin female	IBM PT/AT or compatible	D-Sub, 9-pin male	SYSWAY	XW2Z-200P-V/500P-V	2 m/5 m	---
Communications Board	RS-232C port, D-Sub, 9-pin female	IBM PT/AT or compatible	D-Sub, 9-pin male	SYSWAY	XW2Z-200S-CV/500S-CV	2 m/5 m	ESD (electrostatic discharge) countermeasures
					XW2Z-200S-V/500S-V	2 m/5 m	---

Note The Host Link Units cannot be used to connect the CX-Programmer to a Z-type PC (i.e., one with a -Z suffix on the model number).

2-4 Expanded System Configurations

2-4-1 Required Mounting Conditions

A maximum of 16 Special I/O Units including PC Link Units can be mounted to any slot of CPU, Expansion I/O, and Slave Racks. I/O word numbers 100 to 199, 400 to 459, and DM 1000 to DM 2599 are allocated to each Special I/O Unit.

High-density I/O Units can be mounted Remote I/O Slave Units only when the Remote I/O Slave Units are connected to C200H-RM001-PV1 or C200H-RM201 Remote I/O Master Units.

The number of Special I/O Units used with a Slave Rack is limited by data transmission considerations, as shown in the table below. The numbers in the table indicate the maximum number of Units of groups A, B, C, or D which can be used with a single Slave Rack.

A	B	C	D
High-speed Counter Units Position Control Units (C200H-NC111/112, C200HW-NC113/213) ASCII Units Analog I/O Units ID Sensor Units Fuzzy Logic Units	High-density and Mixed I/O Units Temperature Control Units Cam Positioner Units Heat/Cool Temperature Control Unit PID Control Unit	Temperature Sensor Units Voice Units	Position Control Units (C200H-NC211, C200HW-NC413) Motion Control Units
4 units max.	8 units max.	6 units max.	2 units max.

Note 1. When a combination of Units from groups A, B, C, and D is used, the number from each group must satisfy both the following equations:

$3A + B + 2C + 6D \leq 12$
$A + B + C + D \leq 8$

2. Other Units can be added until the total number of Units reaches ten. If PC Link Units are used, the number of Units including the PC Link Units must not exceed ten.

2-4-2 Special I/O Units

It is possible to connect a variety of Special I/O Units to the C200HX/C200HG/C200HE Racks.

High-density I/O Units (Special I/O Units)

The TTL Input Unit, DC Input Unit, TTL Output Unit, Transistor Output Unit, TTL I/O Unit, and DC Input/Transistor Output Unit are High-density I/O Units.

The C200H-ID501, C200H-OD501, and C200H-MD501 are I/O Units for the TTL Unit.

Eight input points each of the C200H-ID501, C200H-ID215, C200H-MD501, C200H-MD115, and C200H-MD215 can be set for pulse input.

A High-density I/O Unit can retrieve pulse input, which is shorter in length than that of the High-density I/O Unit cycle time, as an input signal when the High-density I/O Unit is set for pulse input.

The C200H-MD501, C200H-MD115, and C200H-MD215 can each be set for 128 dynamic input points (64 points x two circuits) and the C200H-OD501 and C200H-OD215 can each be set for 128 dynamic output points (64 points x two circuits).

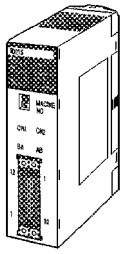

High-speed Counter Units

The High-speed Counter Units have the following six operation modes.

Linear, circular, preset, gate, latch, and sampling operation modes

The High-speed Counter Units, which have a counting speed of 50 kcps, can be used for phase-difference pulse input, adding and subtracting pulse input, and pulse and direction input. The High-speed Counter Units have eight-point output per single axis.

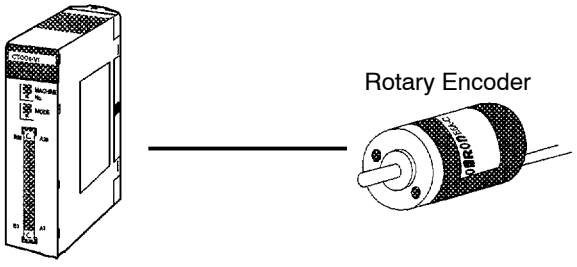

Position Control Units

The Position Control Units have pulse-train output, thus enabling connection to stepping motor drivers or servomotor drivers.

The C200H-NC111 and C200H-NC112 are for a single axis, and the C200H-NC211 is for two axes.

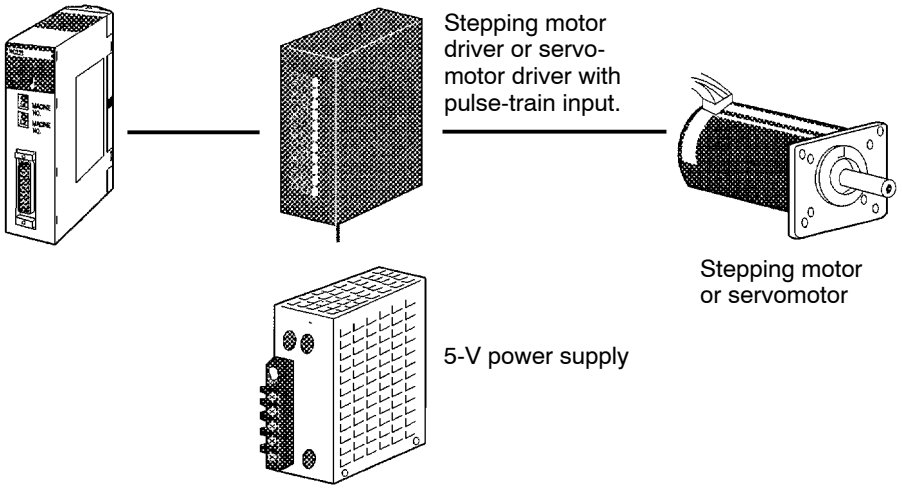

Analog I/O Units

The Analog Input (A/D) Units retrieve analog inputs and the Analog Output (D/A) Unit sends analog outputs.

The following Analog I/O Units are available:

C200H-AD001 with 4-point analog input, C200H-AD002 with 8-point analog input, C200H-DA001 with 2-point analog output, and C200H-DA002 with 4-point analog output

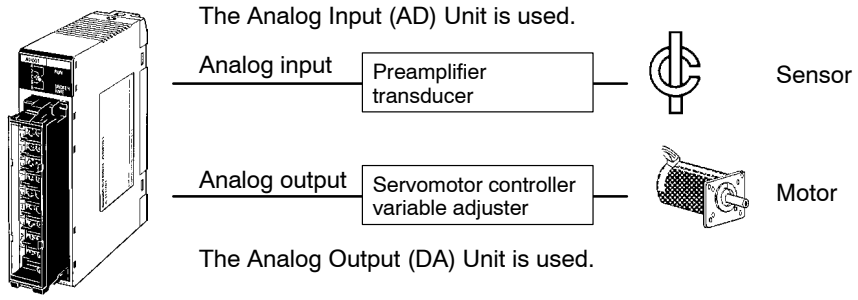

Temperature Sensor Units

The following table lists Temperature Sensor Unit models and available temperature sensors.

Only one kind of temperature sensor can be connected to the C200H-TS001 or C200H-TS002. Each Temperature Sensor Unit connects to a maximum of four temperature sensor inputs.

Model	Connectable temperature sensor
C200H-TS001	K (CA)/K (IC)
C200H-TS002	K (CA)/L (Fe-CuNi) (available for DIN)
C200H-TS101	JPt 100 Ω
C200H-TS102	Pt 100 Ω (available for DIN/1989JIS)

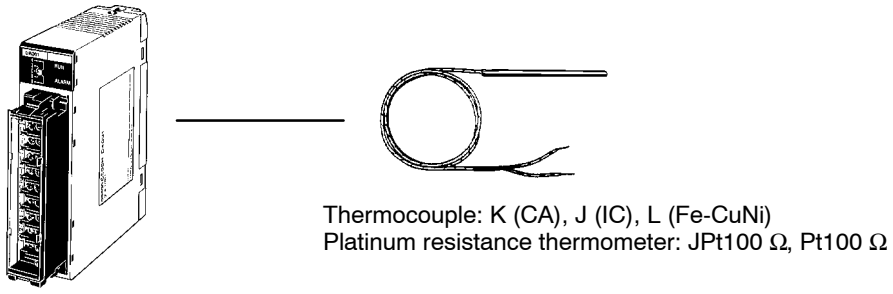

ASCII Unit

BASIC programs can be input to the ASCII Unit via its port 1 from any personal computer in terminal mode if the personal computer incorporates an RS-232C interface.

It is possible to write BASIC programs with an IBM PC/AT or compatible.

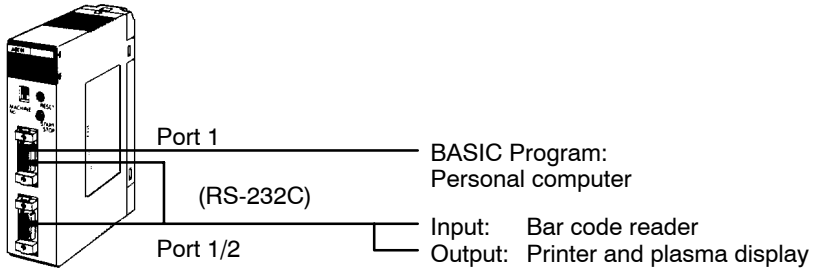

Voice Unit

Voice messages can be input from dynamic microphones or cassette tape recorders and output from loudspeakers or headsets via the Voice Unit.

The Voice Unit incorporates a sentence function and word combination function, either of which can be selected to record voice messages for 64 seconds maximum.

Voice can be saved on floppy disks with an IBM PC/AT or compatible.

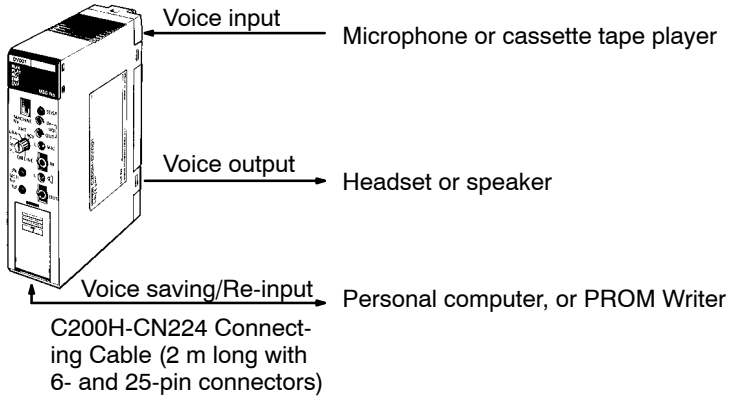

ID Sensor Units

The ID Sensor Units are used to construct non-contact information recognition systems.

By connecting a R/W Head or R/W Antenna to an ID Sensor Unit, data can be written to the Data Carrier attached to each moving object and the data of the Data Carrier can be read by the C200HS.

The following models of ID Sensor Units are available.

Electromagnetic induction model: C200H-IDS01-V1
Microwave model: C200H-IDS21

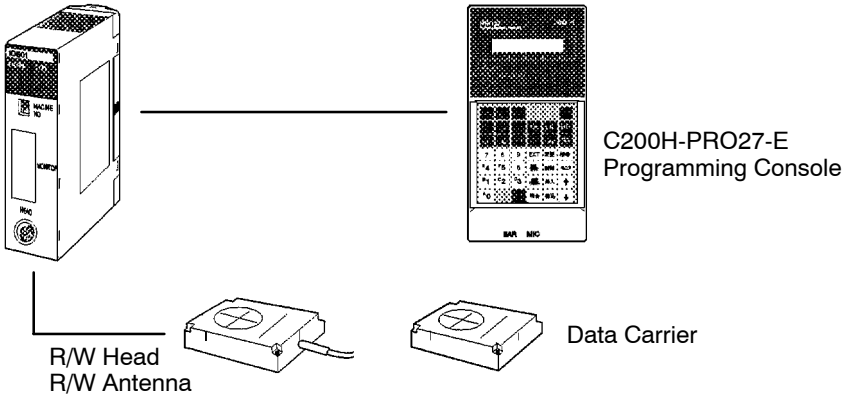

Temperature Control Units

Thermocouples or platinum resistance thermometers connect to the Temperature Control Unit. With the built-in selector of the Temperature Control Unit, ten kinds of thermocouples or two kinds of platinum resistance thermometers can be selected.

Select the control output of the Temperature Control Unit from the following.

Model	Temperature sensor input	Control output
C200H-TC001	Thermocouple: R, S, K (CA), J (IC), T (CC), E (CRC), B, N, L (IC), U (CC)	Transistor output
C200H-TC002		Voltage output
C200H-TC003		Current output
C200H-TC101	Platinum resistance thermometer: JPt100, Pt100	Transistor output
C200H-TC102		Voltage output
C200H-TC103		Current output

Temperature Control Unit **Data Setting Console**

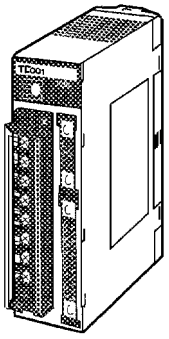

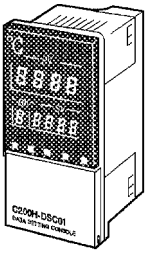

Cam Positioner Unit

A single C200H-CP114 Cam Positioner Unit is as powerful as 48 mechanical cams because it can complete jobs that normally require 48 mechanical cams.

It is possible to set 16-point external output and 32-point internal output as cam output. The 32-point internal output can be retrieved as data by the C200HS.

Cam Positioner Unit **Data Setting Console**

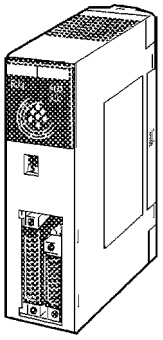

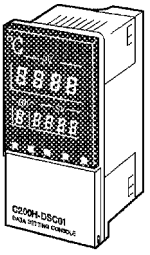

Heat/Cool Temperature Control Units

The Heat/Cool Temperature Control Units measure the temperature of an object with a connected temperature sensor (thermocouple or platinum resistance thermometer), and heats and cools according to a preset control mode.

Select the control output of the Heat/Cool Temperature Control Unit from the following.

Model	Temperature sensor input	Control output
C200H-TV001	Thermocouple: R, S, K (CA), J (IC), T (CC), E (CRC), B, N, L (IC), U (CC)	Transistor output
C200H-TV002		Voltage output
C200H-TV003		Current output
C200H-TV101	Platinum resistance thermometer: JPt100, Pt100	Transistor output
C200H-TV102		Voltage output
C200H-TV103		Current output

Heat/Cool Temperature Control Unit

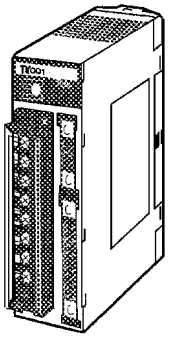

Data Setting Console

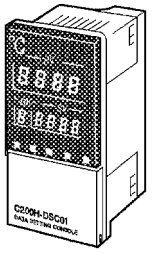

PID Control Unit

The PID Control Unit scales inputs from connected sensors and then carries out PID control according to preset control mode.

Select the control output of the PID Control Unit from the following.

Model	Control output
C200H-PID01	Transistor output
C200H-PID02	Voltage output
C200H-PID03	Current output

PID Control Unit

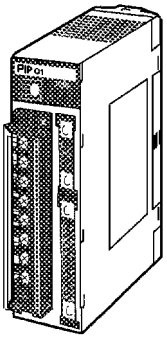

Data Setting Console

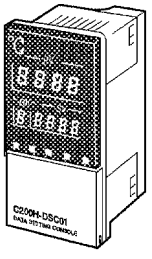

2-4-3 Link Systems and Networks

The C200HX/C200HG/C200HE can be included in an expanded system configuration including a Host Link System (SYSMAC WAY), a PC Link System, Optical or Wired Remote I/O Systems (SYSMAC BUS), CompoBus/S, DeviceNet, SYSMAC NET Link or SYSMAC LINK System. All of these can be used in common with the C200HX/C200HG/C200HE. In addition, the following Unit can be connected: B7A Interface Unit. Specifications for all of these Units are provided in *Appendix B Specifications*.

SYSMAC LINK Systems

OMRON's SYSMAC LINK System is a communications network that connects up to 62 nodes to provide data links, data transfers, and datagram services.

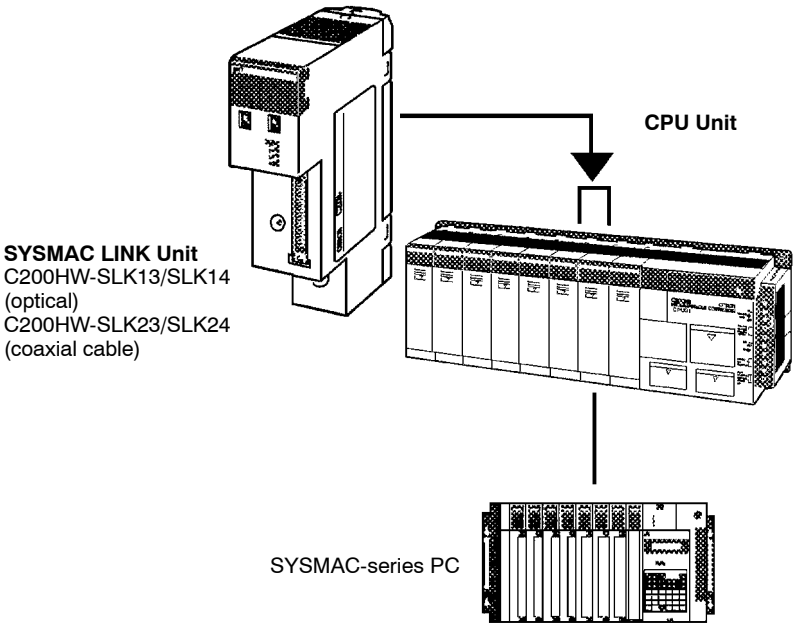

- Data links provide automatic transfer of up to 2,966 words of data in the LR and/or DM Areas.
- Data transfers of up to 256 words each can be implemented by programming the NETWORK READ (RECV(98)) and NETWORK WRITE (SEND(90)) instructions in the user program.
- Data transfers via datagrams are also available using a command/response format.
- A C200HW-COM01 or C200HW-COM04-E Communications Board and a C200HW-CE001 or C200HW-CE002 Bus Connection Unit are required to use a SYSMAC LINK Unit.

The C200H-APS03 Auxiliary Power Supply Unit is used as a backup power supply for optical SYSMAC LINK Systems.

SYSMAC NET Link Systems OMRON's SYSMAC NET Link System is an FA-oriented limited-area network that connects up to 126 nodes to provide datagram services, data transfers, and data links.

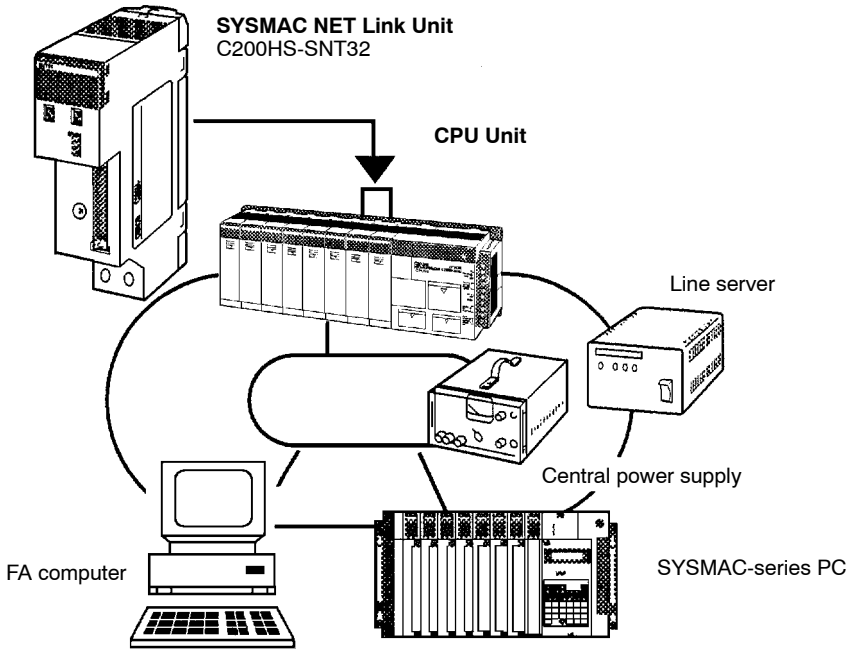

- Data transfers via datagrams are implemented using a command/response format.
- Data transfers can also be implemented for up to 990 words each by programming the NETWORK READ (RECV(98)) and NETWORK WRITE (SEND(90)) instructions in the user program.
- Data links provide automatic transfer of up to 32 words of data in the LR Area and/or up to 99 words of data in other data areas.
- A C200HW-COM01 or C200HW-COM04-E Communications Board and a C200HW-CE001 or C200HW-CE002 Bus Connection Unit are required to use a SYSMAC NET Link Unit.

The C200H-APS01 and C200H-APS02 Power Supply Adapters are used to connect to a central power supply (and must be mounted in the slot immediately to the left of the SYSMAC NET Link Unit).

Note Refer to the *SYSMAC NET Link System Manual (W178)* for further information.

Host Link Systems

A maximum of two Host Link Units can be mounted to slots in either the CPU Rack or an Expansion I/O Rack. The following Host Link Units are available:

C200H-LK101-PV1 (optical cable)
C200H-LK201-PV1 (RS-232C)
C200H-LK202-V1 (RS-422)
For details, refer to the *SYSMAC C-series Rack PCs SYSMAC WAY - Host Link Units System Manual (W143)*.

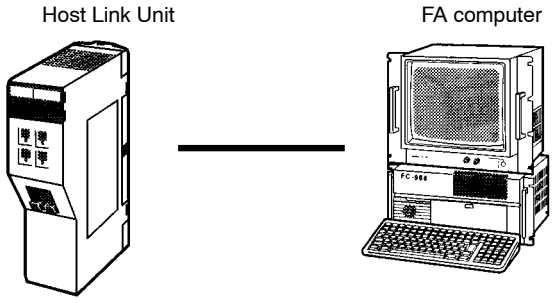

PC Link System

A PC Link System can be used to transfer data between PCs by means of LR 0000 through LR 6315. A maximum of two C200H-LK401 PC Link Units can be mounted to slots in either the CPU Rack or an Expansion I/O Rack. For details, refer to the *PC Link System Manual (W135)*.

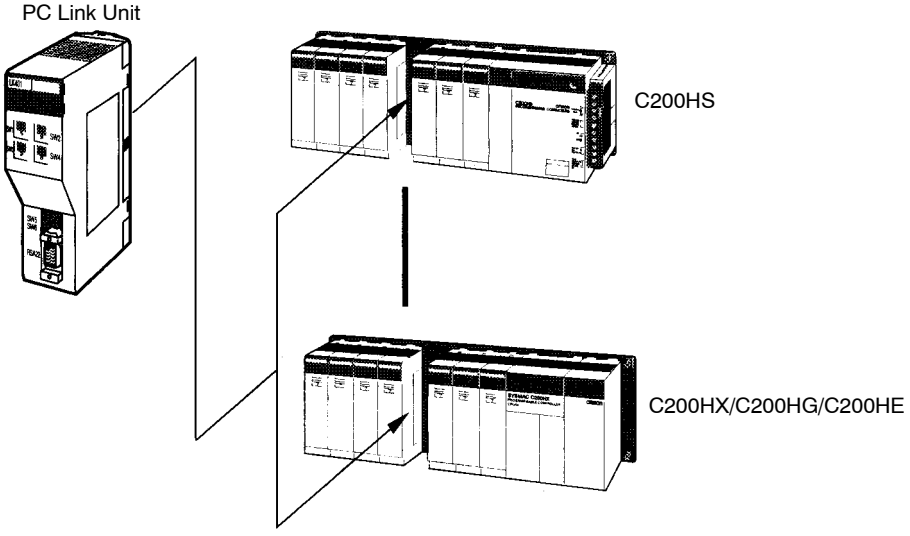

Note The PC Link Units must be counted as Special I/O Units.

CompoBus/S Systems

The CompoBus/S is a high-speed I/O data communications system designed to meet the needs of time-critical FA applications.

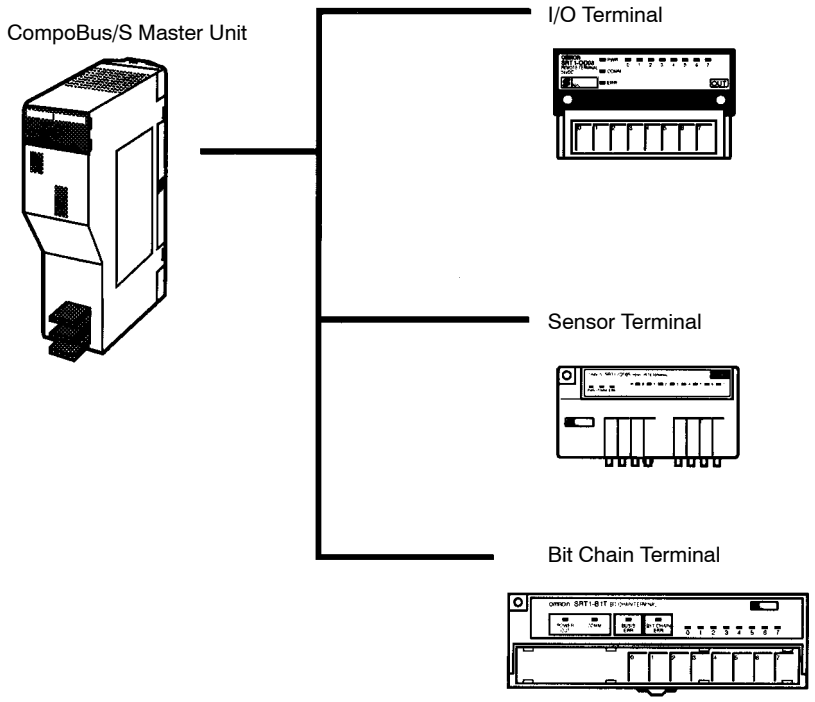

- The CompoBus/S Master Unit is mounted to the CPU Rack or an Expansion I/O Rack. The number of Master Units that can be mounted is indicated below.

Number of Mountable Master Units

C200HX/HE, C200HG-CPU3□/4□/(-Z)

10 Units when used as 1 Special I/O Unit (i.e., 10 words allocated)
5 Units when used as 2 Special I/O Units (i.e., 20 words allocated)

C200HX, C200HG-CPU5□/6□/8□(-Z)

16 Units when used as 1 Special I/O Unit (i.e., 10 words allocated)
5 Units when used as 2 Special I/O Units (i.e., 20 words allocated)

Note Unit numbers A to F can be set only with the following CPU Units.
C200HX-CPU54(-Z)
C200HX-CPU64(-Z)
C200HX-CPU65-Z
C200HX-CPU85-Z
C200HG-CPU53(-Z)
C200HG-CPU63(-Z)

- For each Master Unit, up to 32 slaves can be connected for a maximum of 256 points of I/O data communications (8 input words and 8 output words).
- The Special I/O Area is used for data transmissions.
- A wide variety of slaves are available to support relay, sensor, and other I/O.
- Bit Chain Terminals can also be used as slaves to send and receive small quantities of I/O points at greater distances.

Note The CompoBus/S Master Units must be counted as Special I/O Units.

DeviceNet Systems

The DeviceNet is an I/O data communications system conforming to the DeviceNet standard being developed to standardize device-level networks for FA.

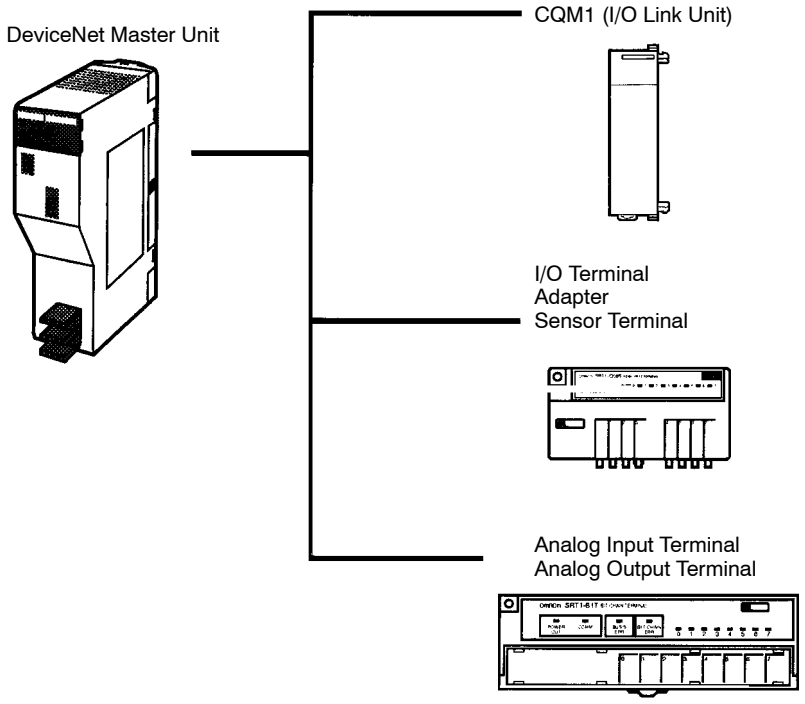

- The DeviceNet Master Unit is mounted to the CPU Rack or an Expansion I/O Rack. Only one Master Units can be mounted.
- Up to 50 slaves can be connected for a maximum of 1,600 points of I/O data communications (50 input words and 50 output words).
- The IR Area is used for data transmissions (outputs: IR 50 to IR 99; inputs: IR 350 to IR 399).
- A wide variety of slaves are available to support relay, sensor, analog and other I/O.

Note

1. The DeviceNet System cannot be used at the same time as a Remote I/O System.
2. The DeviceNet Master Units must be counted as Special I/O Units.
3. Slaves made by other manufacturers can be connected as long as they conform to the DeviceNet standard.

Remote I/O Systems

A maximum of two Optical or Wired Remote I/O Master Units can be mounted to slots in either the CPU Rack or an Expansion I/O Rack. A maximum total of five Slave Racks, each with a single Slave Unit, can be connected. C500 Slave Racks can be used, but each C500 Slave Rack must be counted as two Racks in calculating the total. For details, refer to the *SYSMAC C-series Rack PCs Wired Remote I/O System Manual (W120)* or *SYSMAC C-series Optical Remote I/O System Manual (W136)*.

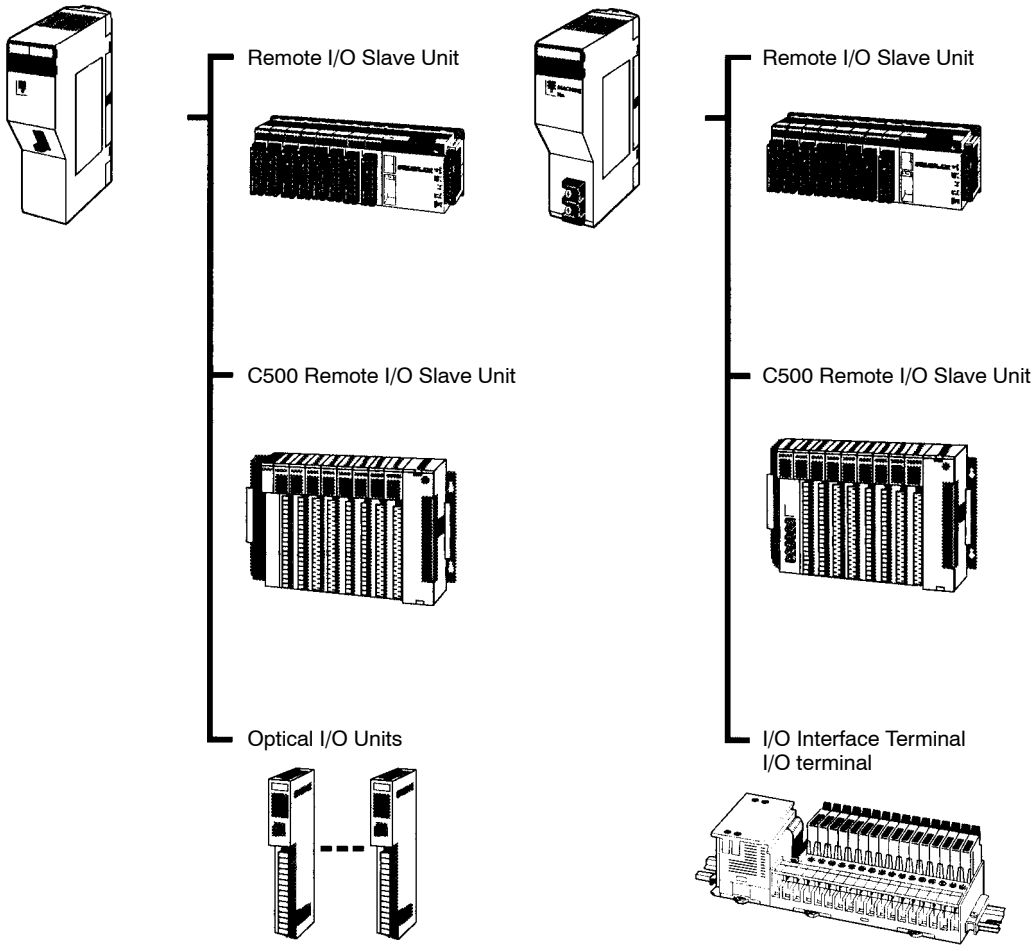

Optical Systems

A maximum total of 64 Optical I/O Units can be connected in an optical system (32 words).

Note

1. The number of Slave Racks is not related to the number of Master Units.
2. If the number of Optical I/O Units exceeds 32, a B500-RPT01(-P) Repeater Unit is required.
3. Optical and Wired Units cannot be mixed in the same system.

Wired Systems

A maximum total of 32 I/O Interface Terminals and I/O Terminals (32 words) can be connected in a wired system.

Controller Link Systems

Controller Link Units can be mounted to C200HX/HG/HE CPU Racks to create automatic data links that can be freely set between C200HX/HG/HE, CVM1, and/or CV-series PCs. Controller Link Support Boards are also available so that IBM PC/AT or compatibles can also be included in the Controller Link System. Controller Link Systems support a message service that can be used as required for communications using the SEND and RECV instructions. An example configuration for C200HX/HG/HE PCs is shown below.

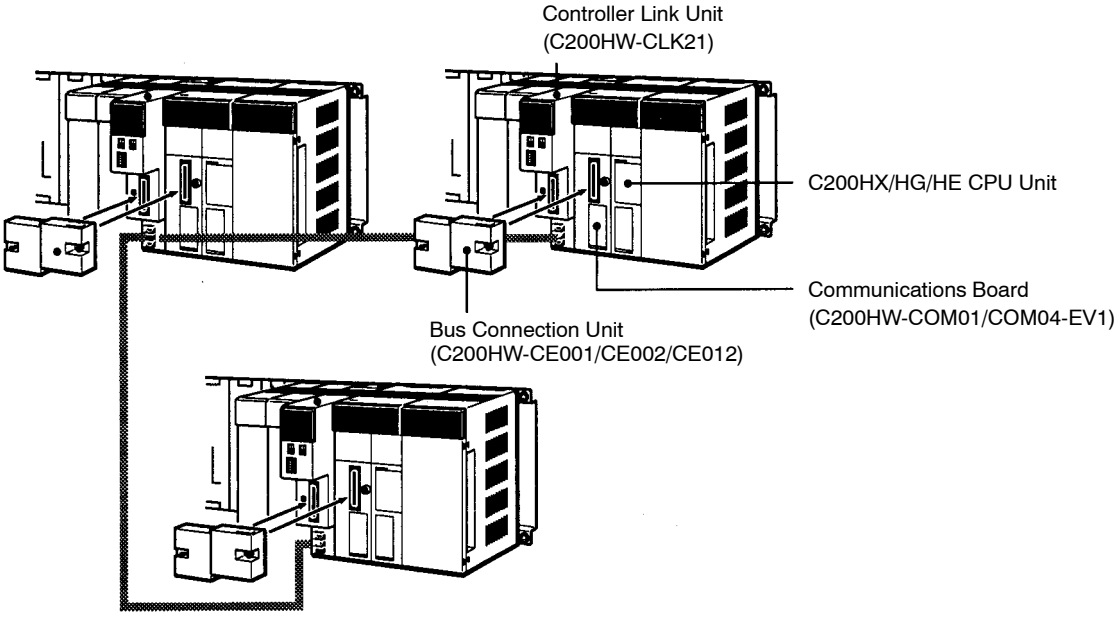

- Controller Link Systems are wired using multidrop connections with twisted-pair cable. Each System can include up to 32 nodes and can extend up to 1 km for 500-Kbps communications and up to 500 m for 2-Mbps communications.
- For data links, each PC node can read/write up to 8,000 words and each computer node, up to 32,000 words. The data link words can be either set automatically or that can be set manually to more efficiently meet the needs of specific applications using Controller Link Support Software.
- The message service can be used to send up to 2,012 bytes of data at a time.
- A Communications Board (C200HW-COM01/COM04-EV1) and a Bus Connection Unit (C200HW-CE001/CE002/CE012) are required to mount a Controller Link Unit to a C200HX/HG/HE PC.
- The Controller Link Unit cannot be used with the C200HE-CPU11-E/ZE.

PC Card Unit

The PC Card Units allows you to expand PC capabilities by adding a PC card. The PC card can be used to save and retrieve CIO, DM, EM, and other data area contents between the CPU Unit and the PC card from the ladder-diagram program (using the CMCR instruction). An Ethernet card can also be used to connect to an Ethernet network so that data area or ladder-diagram program contents can be read or written from computers on the network. Examples of PC Card Unit Applications are shown below.

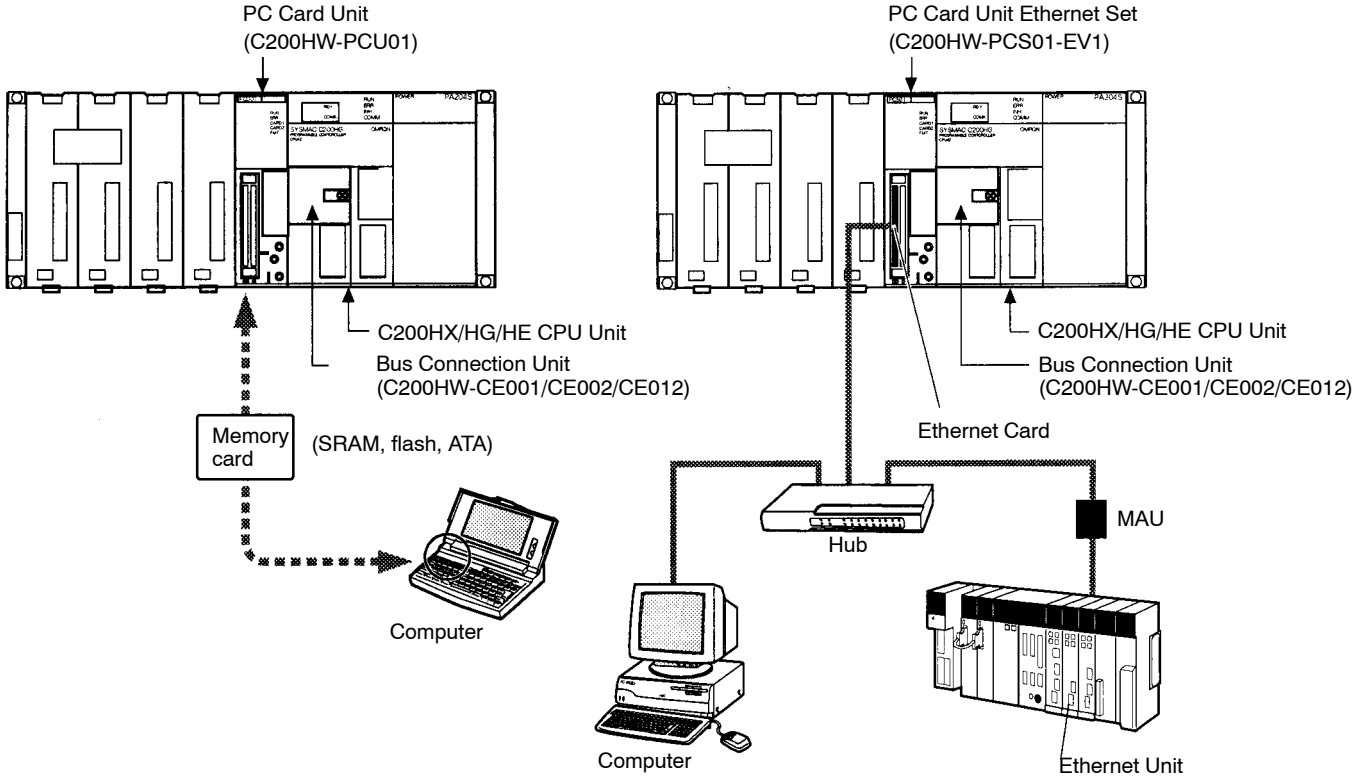

Note A media attachment unit (MAU) is required to connect twisted-pair cable to the CV-series Ethernet Unit.

- Program data read via a PC Card Unit cannot be edited on the Ladder Support Software.
- PCMCIA2.1 PC cards are used (except for 3.3V cards). Two PC card interface slots are provided. Up to two type I or type II cards can be mounted, or one type III card can be mounted, enabling applications of standard SRAM, ATA, flash memory, and other PC cards.
- A Communications Board (C200HW-COM01/COM04-EV1) and a Bus Connection Unit (C200HW-CE001/CE002/CE012) are required to mount a PC Card Unit to a C200HX/HG/HE PC.

SECTION 3
Installation and Wiring

This section describes how to install a PC System, including mounting the various Units and wiring the System. Be sure to follow the instructions carefully during installing. Improper installation can cause the PC to malfunction, resulting in extremely dangerous situations.

3-1 Installation Environment 50
- 3-1-1 Installation and Wiring Precautions. 50
- 3-1-2 Installing Racks 51
- 3-1-3 Mounting Height 53
- 3-1-4 Mounting Dimensions (Units: mm) 54
- 3-1-5 DIN Track Mounting 55
- 3-1-6 Mounting Units to the Backplane 58
- 3-1-7 I/O Connecting Cables 60
- 3-1-8 Mounting Memory Cassettes 61
- 3-1-9 Mounting a Communications Board 62

3-2 Wiring 63
- 3-2-1 Power Supply Wiring 63
- 3-2-2 Standard I/O Unit Wiring 70
- 3-2-3 Electrical Noise 76

3-1 Installation Environment

This section details the necessary environmental conditions for installing the PC. Proper installation procedures and a proper environment are essential to getting the best performance and reliability from your PC.

Caution Static electricity can damage PC components. Your body can carry an electrostatic charge, especially when the humidity is low. Before touching the PC, be sure to first touch a grounded metallic object, such as a metal water pipe, in order to discharge any static build-up.

3-1-1 Installation and Wiring Precautions

Ambient Conditions

Do not install the PC in any of the following locations. Doing so will affect PC life and may adversely affect operating performance.

- Locations subject to direct sunlight.
- Locations subject to ambient temperatures lower than 0°C or higher than 55°C (or higher than 45°C when using a Programming Console).
- Locations subject to ambient humidity lower than 35% or higher than 85%.
- Locations subject to condensation as the result of severe changes in temperature.
- Locations subject to corrosive or flammable gases.
- Locations subject to dust (especially iron dust) or salts.
- Locations subject to shock or vibration.
- Locations subject to exposure to water, oil, or chemicals.
- Take appropriate and sufficient countermeasures when installing systems in the following locations.
    - Locations subject to static electricity or other forms of noise.
    - Locations subject to strong electromagnetic fields.
    - Locations subject to possible exposure to radioactivity.
    - Locations close to power supplies.

Cooling

There are two points to consider in order to ensure that the PC does not overheat. The first is the clearance between the Racks, and the second is installation of a cooling fan.

Clearance between Racks

The Racks need to have sufficient room between each other to allow for I/O wiring, and additional room to ensure that the I/O wiring does not hamper cooling. The Racks must also be mounted so that the total length of the Connecting Cable between all Racks in a given series does not exceed 12 m. As a general rule, about 70 to 120 mm should be left between any two Racks. Consider factors such as the width of the wiring duct, wiring length, ventilation, and ease of access to Units, when determining the spacing between Racks. Greater space is required between Racks when using certain CPU Bus and Special I/O Units. Refer to the operation manuals for the Units you are using for details.

Cooling Fan

A cooling fan is not always necessary, but may be needed in some installations. Try to avoid mounting the PC in a warm area or over a source of heat. A cooling fan is needed if the ambient temperature may become higher than that specified. If the PC is mounted in an enclosure, install a cooling fan, as shown in the following diagram, to maintain the ambient temperature within specifications.

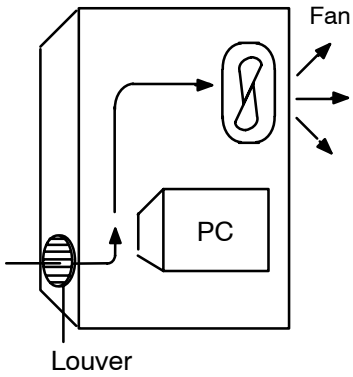

Noise Resistance

Abide by the following precautions to help increase resistance to noise.

- Do not mount the PC in a control panel containing high-voltage equipment.
- Install the PC at least 200 mm from power lines.
- Ground the mounting plate between the PC and the mounting surface.

3-1-2 Installing Racks

The following figures show two views, each consisting of a mounted CPU Rack and two Expansion I/O Racks. Provide a space of 20 mm minimum on the upper and lower sides of each duct for ventilation and Unit replacement.

Example Duct Layout

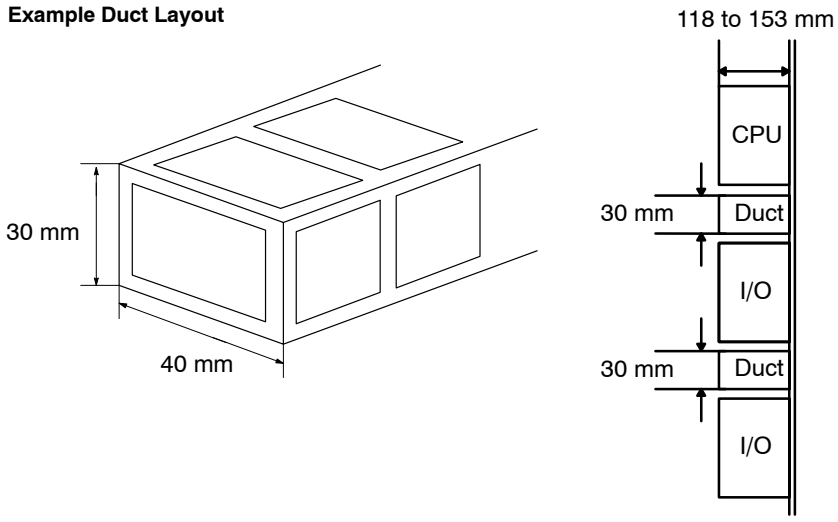

Each Rack must be mounted vertically, that is, with the printing on the front panels oriented as it would normally read. Racks may be mounted to any sturdy support meeting the environmental specifications.

Whenever possible, the Racks should be mounted to metal-plated mounting plate that are securely grounded. If all of the Racks cannot be mounted to the same mounting plate, the individual plates should be securely connected together using 3 wires of at least 2 mm^2 in cross-sectional area. The Backplanes are mounted to the plate(s) with four M4 screws each.

Whenever possible, use wiring conduit to hold the I/O wiring. Standard wiring conduit should be used, and it should be long enough to completely contain the I/O wiring and keep it separated from other cables.

Note 1. Tighten the PC Rack mounting screws, terminal block screws, and cable screws to the torque of 1.2 N • m.

2. Always use the standard installation method. A nonstandard installation will decrease heat dissipation, delay the replacement notification signals (particularly for the C200HW-PA204C), and may degrade or damage the internal elements.

⚠ **Caution** Racks must be mounted horizontally so that the Units are upright (i.e., not upside down or lying on their backs). The Units can overhead and malfunction if not mounted properly.

I/O Connecting Cables

Each I/O Connecting Cable can be up to 10 m long, but the sum total of all cables between the CPU Rack and Expansion I/O Racks must be 12 m or less.

The duct work shown in the following diagram is recommended to hold I/O wiring. Although optional, this duct work can be used to house the wires from the I/O Units that run along the sides of the Racks, keeping the wires from becoming entangled. This figure illustrates the correct way to mount the Racks.

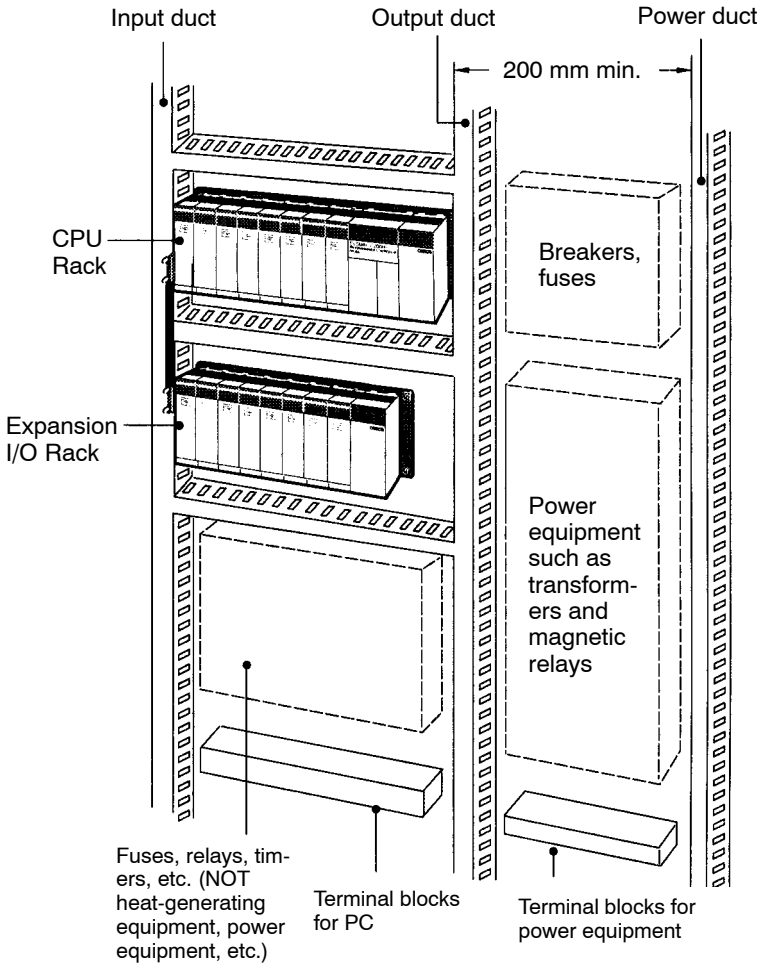

Note When using the C200HW-PA209R Power Supply Unit at an ambient temperature exceeding 50°C, in order to improve air circulation, ensure that there is a

gap of at least 80 mm between the top of the Power Supply Unit and the top of the panel, wiring ducts, parts, or any other structures.

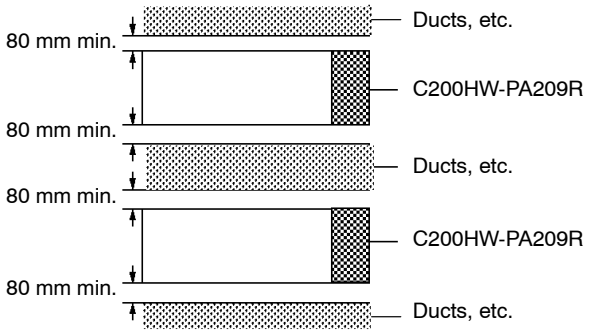

3-1-3 Mounting Height

The mounting height of CPU Racks, Expansion I/O Racks, or Slave Racks is 118 mm or 153 mm depending on the type of I/O Units mounted. If Peripheral Devices or connection cables are attached, the additional dimensions must be taken into account. Allow sufficient clearance in the control panel in which the PC is mounted.

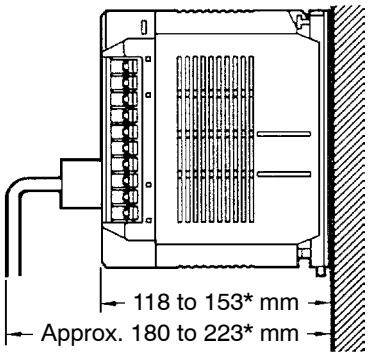

Note: Figures marked with an asterisk are for when the C200HW-PA209R is mounted.

3-1-4 Mounting Dimensions (Units: mm)

Backplanes

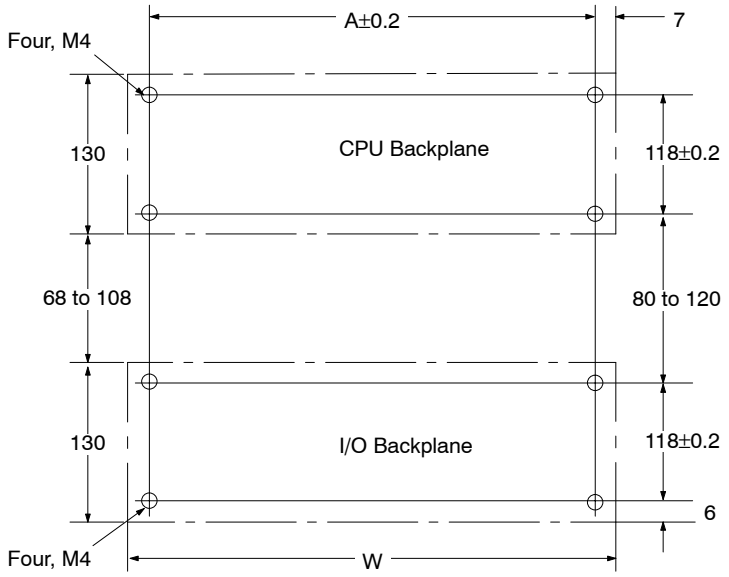

	Model	A	W
CPU Backplane	C200HW-BC031	246 mm	260 mm
	C200HW-BC051	316 mm	330 mm
	C200HW-BC081-V1	421 mm	435 mm
	C200HW-BC101-V1	491 mm	505 mm
I/O Backplane	C200HW-BI031	175 mm	189 mm
	C200HW-BI051	245 mm	259 mm
	C200HW-BI081-V1	350 mm	364 mm
	C200HW-BI101-V1	420 mm	434 mm

Note The C200HW-PA204R/PA209R cannot be used with all combinations of CPU Units and Backplanes. Refer to page 23, *Restrictions for the C200HW-PA204R/PA209R*, for details.

Backplane Insulation Plates

If there is an electric potential difference between grounds when devices are wired separately, then use a Backplane Insulation Plate. There are four models available, corresponding to the number of slots in the Backplane. The dimensions at locations A, B, C, D, and E are shown below in millimeters for each Backplane Insulation Plate model.

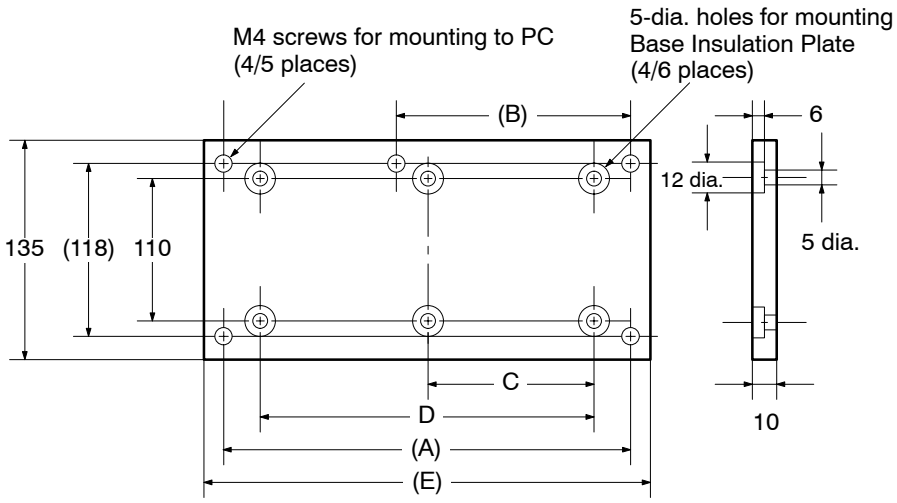

Insulation Plates for CPU Backplanes

Specifications	Model	Dimensions (mm)				
		E	D	C	B	A
For 3 slots	C200H-ATT31	261	210	---	---	246
For 5 slots	C200H-ATT51	331	280	---	---	316
For 8 slots	C200H-ATT81	436	385	---	---	421
For 10 slots	C200H-ATTA1	506	455	227.5	270.5	491

Insulation Plates for CPU Backplanes

Specifications	Model	Dimensions (mm)				
		E	D	C	B	A
For 3 slots	C200HW-ATT32	190	140	---	---	175
For 5 slots	C200HW-ATT52	260	210	---	---	245
For 8 slots	C200HW-ATT82	365	315	---	---	350
For 10 slots	C200HW-ATTA2	435	385	---	---	420

3-1-5 DIN Track Mounting

The PC may be mounted using DIN track if desired. This type of mounting is not required, and the PC may be directly mounted to any sturdy support meeting the environmental specifications (refer to *Appendix B Specifications*). If you want to mount the PC on DIN track, you can order a DIN Track from OMRON (refer to *Appendix B Standard Models*). DIN Tracks come in the two heights shown below.

Note Never use DIN Track to mount Backplane in locations subject to vibration.

DIN Track Mounting Bracket

The DIN Track Mounting Bracket shown below is necessary for mounting the PC to the DIN Track.

DIN Track

The following DIN Tracks are available.

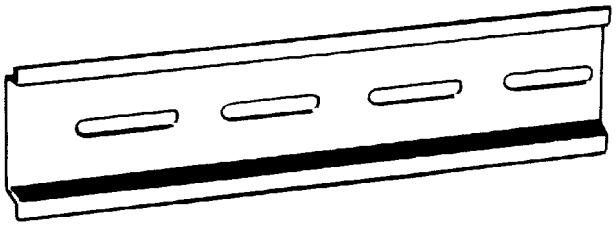

Model	Specification
PFP-50N	50 cm long, 7.3 mm high
PFP-100N	1 m long, 7.3 mm high
PFP-100N2	1 m long, 16 mm high

Procedure

1, 2, 3...

1. The following diagram is a view of the back of the Backplane. Attach one Mounting Bracket to the left and right sides of the Backplane as shown below.

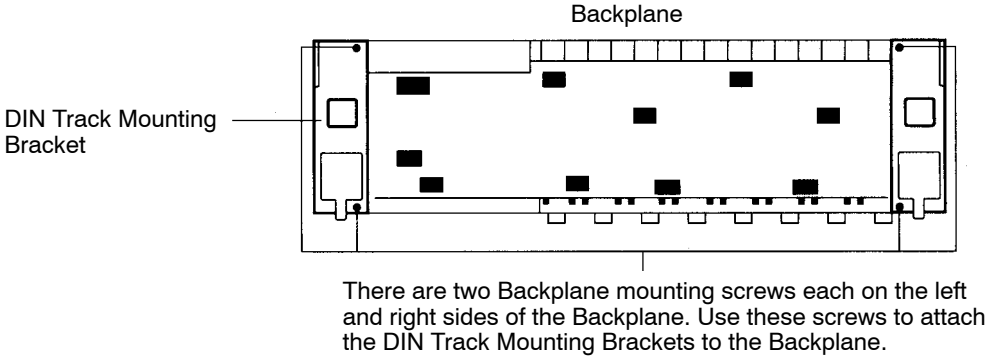

2. Mount the Backplane to the DIN Track so that the claws on the Mounting Brackets fit into the upper portion of the DIN Track as shown below.

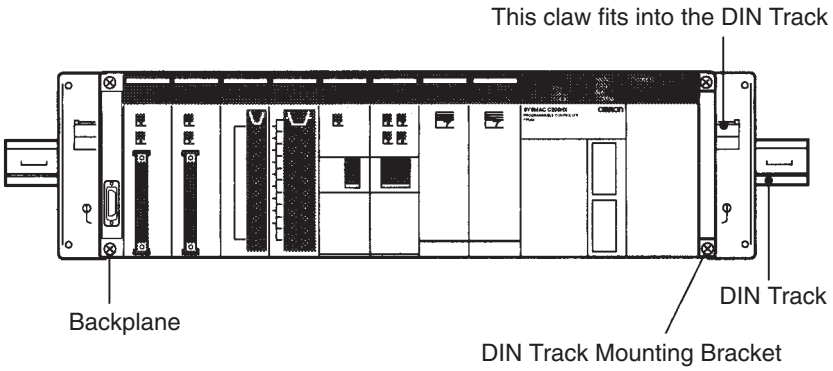

3. Loosen the screws attaching the Mounting Brackets to the Backplane. Slide the Backplane upward as shown below so that the Mounting Bracket and Backplane clamp securely onto the DIN Track. Tighten the screws.

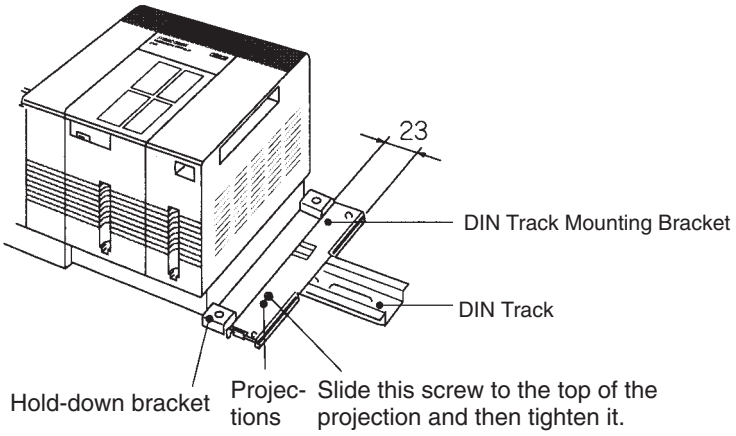

■ Using the I/O Unit Mounting Brackets

The C200H-ATT31/51/81/A1 and C200HW-ATT33/53/83/A3 I/O Unit Mounting Brackets are used for the C200H Series. When converting to the C200HX/HG/HE, the C200HW I/O Unit Mounting Brackets must be used.

C200HW I/O Unit Mounting Brackets

Model	Specification
C200HW-ATT33	For 3 slots (Used with C200HW-BC031.)
C200HW-ATT53	For 5 slots (Used with C200HW-BC051.)
C200HW-ATT83	For 8 slots (Used with C200HW-BC081-V1.)
C200HW-ATTA3	For 10 slots (Used with C200HW-BC101-V1.)
C200HW-ATT34	For 3 slots (Used with C200HW-BI031.)
C200HW-ATT54	For 5 slots (Used with C200HW-BI051.)
C200HW-ATT84	For 8 slots (Used with C200HW-BI081-V1.)
C200HW-ATTA4	For 10 slots (Used with C200HW-BC101-V1.)

3-1-6 Mounting Units to the Backplane

The CPU Unit of the C200HX/C200HG/C200HE has no I/O points built in. In order to complete the PC it is necessary to mount at least one or more I/O Units to the Backplane. Mount the I/O Unit to the Backplane by locking the top of the I/O Unit into the slot on the Backplane and rotating the I/O Unit downwards as shown in the following diagram.

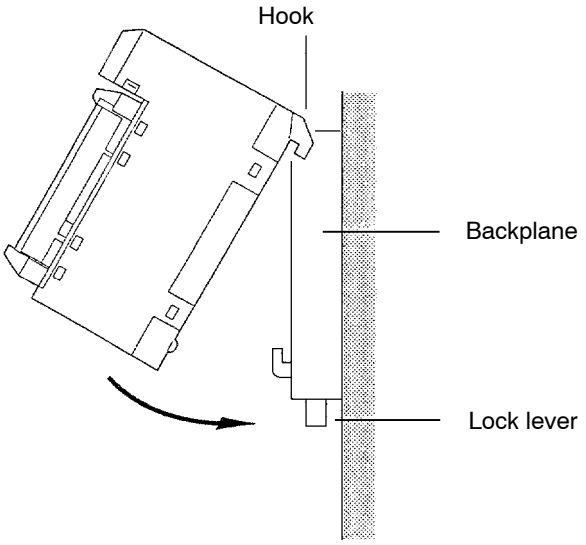

Press down on the yellow lock lever at the bottom of the slot, press the I/O Unit firmly into position, and then release the yellow lock lever, making sure the connector on the back of the Unit is properly connected.

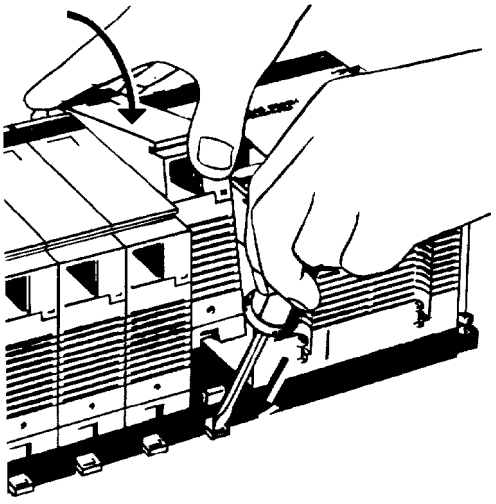

(To remove a Unit, hold down the lock lever with an implement such as a screwdriver.)

CPU Units, I/O Power Supply Units and Slave Units must have the screws on the bottom tightened with a Phillips screwdriver. The screwdriver must be held at a slight angle, so be sure to leave enough space below each Rack.

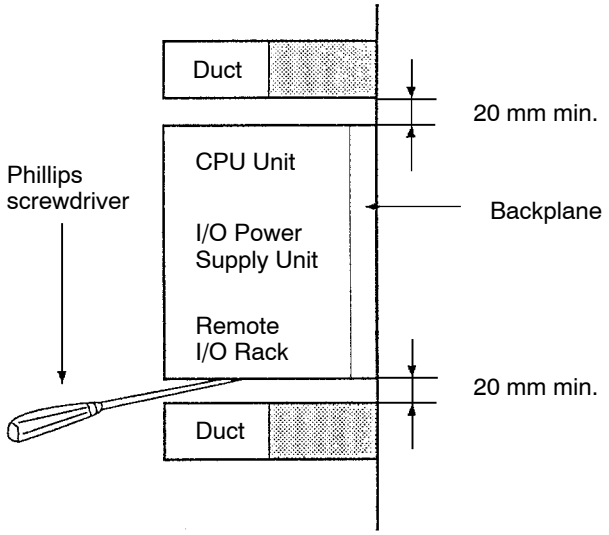

3-1-7 I/O Connecting Cables

Each Rack must be mounted vertically, that is with the printing on the front panels oriented as it would normally be read. The Racks should be mounted one above the other with the CPU Rack uppermost as shown below.

The C200HX/HG/HE is approved by Underwriters Laboratories under the condition that, "The device must be mounted vertically for ventilation purposes."

Connect the CPU Rack to the first Expansion I/O Rack with an I/O Connecting Cable and then connect each Expansion I/O Rack in order, again using I/O Connecting Cables. Each I/O Connecting Cable can be up to 10 m long, but the sum total of all cables between the CPU Rack and Expansion I/O Racks must be 12 m or less.

Firmly connect the I/O Connecting Cables to the connectors on the Backplanes and tighten the connector screws. An I/O bus error will occur stopping PC operation if any of the I/O Connecting Cables is disconnected. Be sure to connect these Cables carefully and securely.

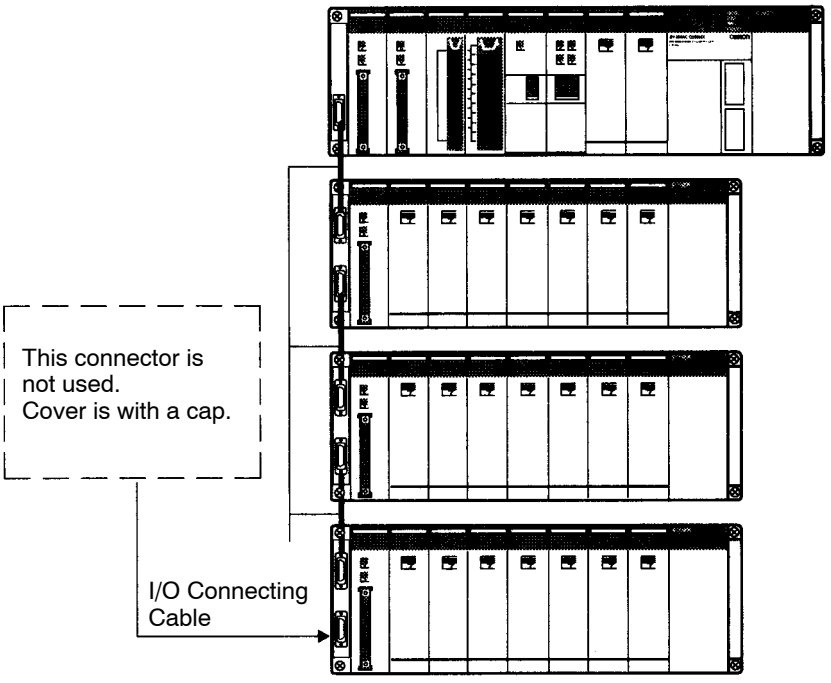

A hole of 53 mm is diameter is required to pass the connectors on the I/O Connecting Cables through. This hole can be reduced to 33 mm by removing the hood from the connector, but be sure to reassemble the connector properly and securely, and secure it with the connector screws.

The pull strength of the Cables is 5 kg. Do not allow more than 5 kg of force to be applied to the Cables.

Note

1. The sum of the length of all I/O Connecting Cables in one PC must be 12 m or less.
2. Be careful to connect the Cables in the correct locations.
3. Always secure the I/O connection cables with the connector screws.

3-1-8 Mounting Memory Cassettes

Use the following procedure to mount a Memory Cassette.

⚠ **Caution** Be careful to always turn the power off before inserting or removing a Memory Cassette. If a Memory Cassette is inserted into or removed from the CPU Unit with the power on, it may cause the CPU Unit to malfunction or cause damage to the memory.

1, 2, 3... 1. Open the Memory Cassette compartment cover.

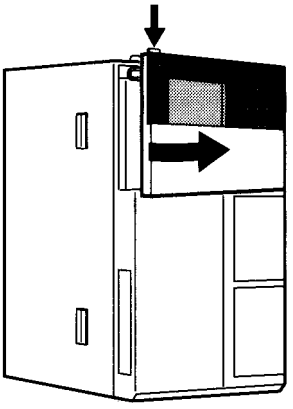

2. Press the Memory Cassette firmly to the back to mount it.

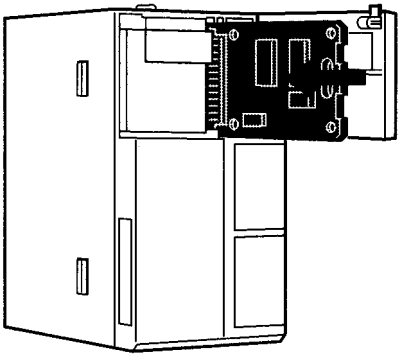

3. Close the compartment cover.

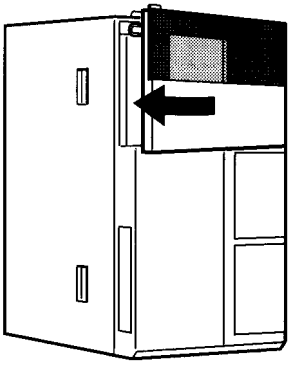

3-1-9 Mounting a Communications Board

⚠ **Caution** Be careful to always turn the power off before inserting or removing a Communications Board. If a Communications Board is inserted into or removed from the CPU Unit with the power on, it may cause the CPU Unit to malfunction, cause damage to the memory, or cause errors in communications.

1, 2, 3... 1. Open the Memory Cassette compartment cover.

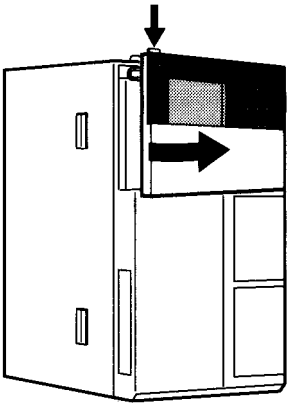

2. Open the Communications Board compartment cover.

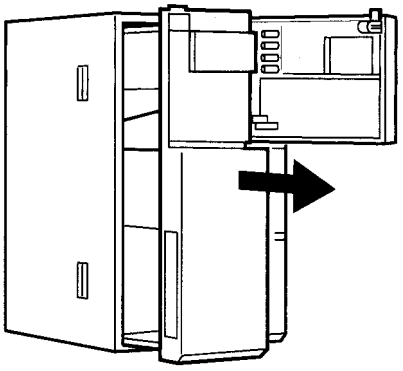

3. Slid the Communications Board in on the supports and press it firmly to the back of the compartment.

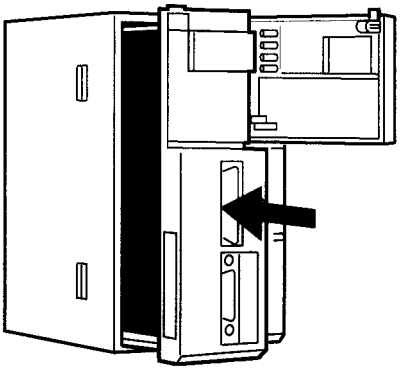

4. Close the compartment covers.

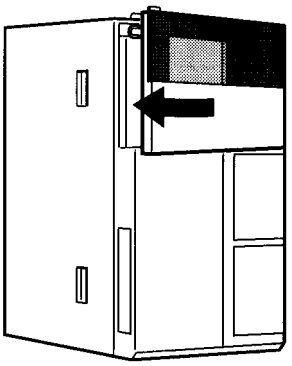

3-2 Wiring

3-2-1 Power Supply Wiring

AC Power Supply Units

Note

1. Do not remove the protective label from the top of the Unit before wiring. This label is to prevent wiring clippings and other foreign matter from entering the Unit during wiring procedures.
2. After completing the wiring, remove the protective label from the top of the Unit before starting operation. The Unit will overheat if operated with this label in place.

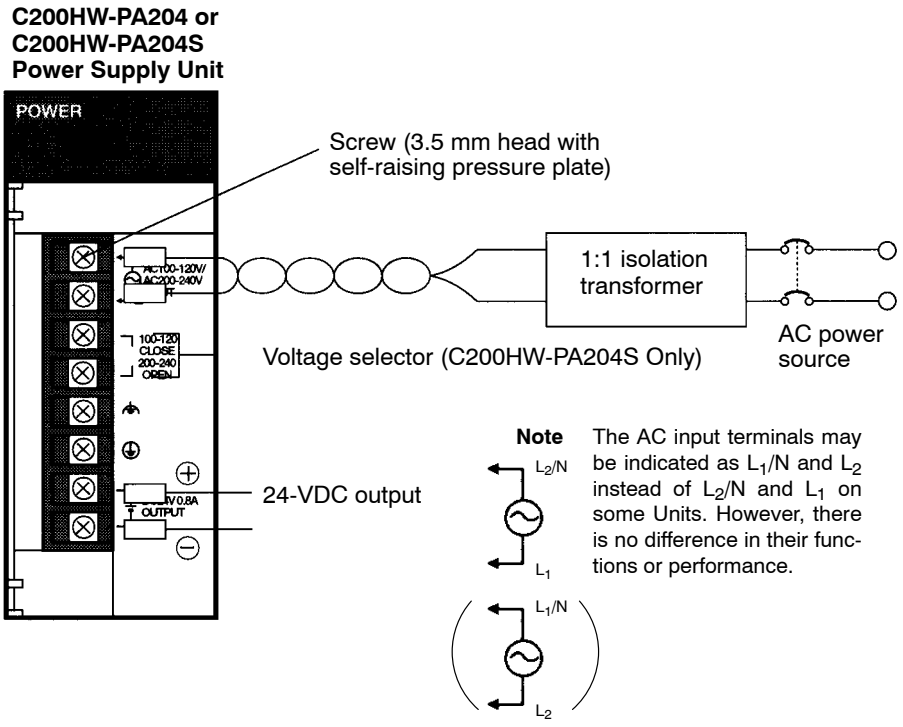

C200HW-PA204R or C200HW-PA209R Power Supply Unit

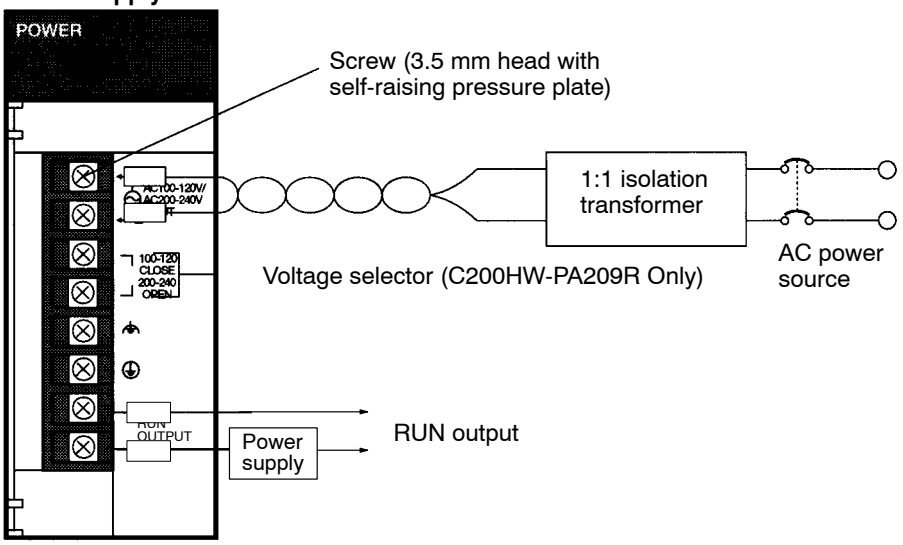

C200HW-PA204C Power Supply Unit

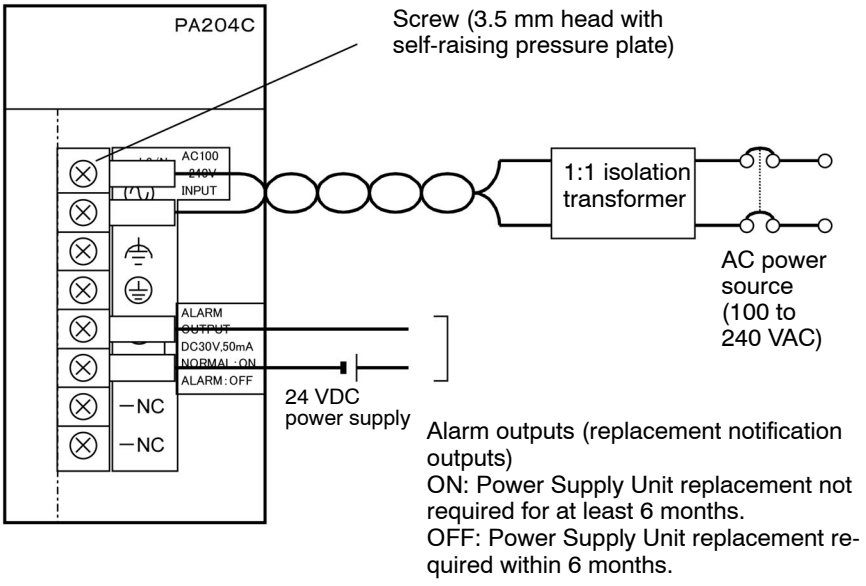

AC Power Source

- Supply 100 to 120 or 200 to 240 VAC.
- Supply 100 to 240 VAC to the C200HW-PA204, C200HW-PA204R, or C200HW-PA204C.
- Keep voltage fluctuations within the specified range

Power Supply Unit model	Supply voltage	Allowable voltage fluctuations
C200HW-PA204S/PA209R	100 to 120 VAC	85 to 132 VAC
	200 to 240 VAC	170 to 264 VAC
C200HW-PA204/PA204R/PA204C	100 to 240 VAC	85 to 264 VAC

- If one power supply phase of the equipment is grounded, connect the grounded phase side to the L_2/N (or L_1/N if so indicated) terminal.

Voltage Selector

Shorted: 100 to 120 VAC
Open: 200 to 240 VAC

Short-circuit the voltage selection terminals with the shorting bracket supplied as an accessory to select 100 to 120 VAC supply voltage. For 200 to 240 VAC leave them open.
The C200HW-PA204, C200HW-PA204R, or C200HW-PA204C has a wide-range supply voltage (100 to 240 VAC), so voltage selector terminals are not provided.

Isolation Transformer

Noise between the PC and ground can be significantly reduced by connecting a 1-to-1 isolation transformer. Do not ground the secondary coil of the transformer.

Current Consumption

The current consumption will be 120 VA max. (180 VA max. with the C200HW-PA209) per Rack, and there will be a surge current of at least 5 times the max. current when power is turned on.

24-VDC Output

Use these terminals as the power supply for 24-VDC Input Units. Never externally short these terminals; PC operation will stop if these terminals are shorted. These terminals are available on the C200HW-PA204S only. Correct the wiring (releasing the short state) and power is supplied again to release this state. Although the 24-VDC output can supply up to 0.8 A, the combined power consumption for both 5 V and 26 V must be 30 W or less, i.e., the capacity of the 24-VDC output will be reduced if the Units mounted to the Rack consume a lot of current. Refer to *Appendix C Unit Current and Power Consumption* for the consumption current of each Unit.

The output voltage of the 24-VDC output will vary with the current consumption of the load as shown in the following table. Be sure to check the current consumption and allowable voltage ranges of the devices connected before using these terminals.

Load current on 24-VDC output	**Less than 0.3 A**	**0.3 A or higher**
Accuracy of 24-VDC output for lot No. 0197 or later	+17% –11%	+10% –11%
Accuracy of 24-VDC output for lot No. 3187 or earlier	+10% –20%	

Note Lot numbers are as shown in the following diagram.

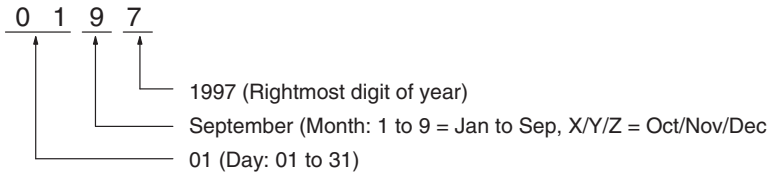

Connect a dummy load as shown in the following diagram if the maximum operating voltage of the connected device is 26.4 V (24 V +10%).

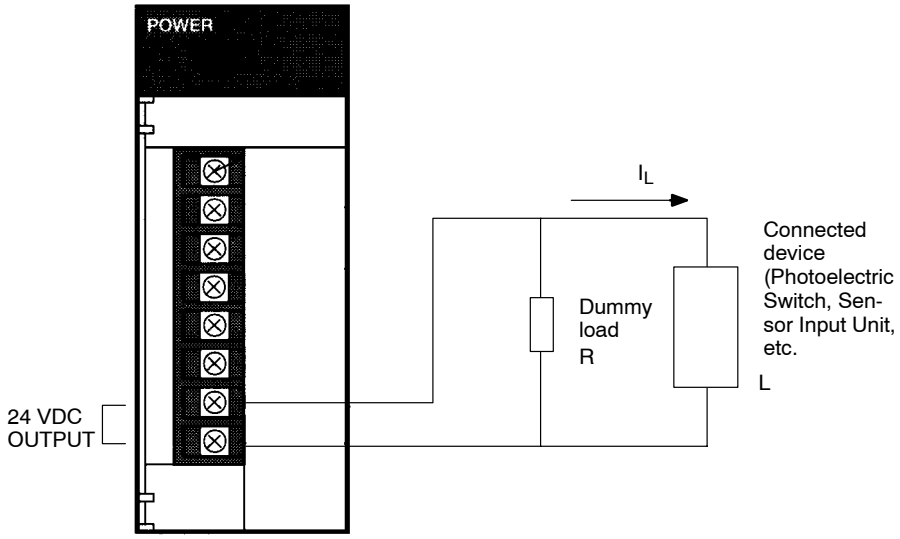

- Resistance of the dummy load:

  $R=24/(0.3 - I_L)$ (Ω)

  120 Ω when I_L= 0.1 A
  240 Ω when I_L= 0.2 A
  Not necessary when I_L= 0.3 A
  (I_L: Total current of connected devices)

- Capacity of the dummy load resistance:

  $W=(0.3 - I_L) \times 26.4 \times 5$ (Safety factor)

  30 W (120 Ω) when I_L= 0.1 A
  15 W (240 Ω) when I_L= 0.2 A

Note Since the dummy load will generate heat, be careful not to allow any combustible materials to come in contact with the resistor.

RUN Output

These terminals turn ON whenever the CPU Unit is operating in RUN or MONITOR Mode. Use these terminals under the following specifications These terminals are available on the C200HW-PA204R/PA209R only.

Model	C200HW-PA204R	C200HW-PA209R
Contact form	SPST-NO	
Maximum switching capacity	250 VAC: 2 A for resistive loads 0.5 A for inductive loads 24VDC: 2 A	240 VAC: 2A for resistive loads 120 VAC: 0.5 A inductive loads 24 VDC: 2A

Crimp Terminals

The terminals on the Power Supply Unit are M3.5, self-raising terminals with screws. Use crimp terminals for wiring. Do not connect bare stranded wires directly to terminals. Tighten the terminal block screws to the torque of 0.8 N • m. Use round-type crimp terminals (M3.5) having the dimensions shown below.

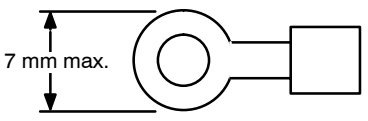

⚠ **Caution** Tighten the terminal block screws to the torque of 0.8 N • m. The loose screws may result in short-circuit, malfunction, or burning.

Note 1. Supply power to all of the Power Supply Units from the same source.

2. Be sure to check the setting of the voltage selector before supplying power.
3. Do not forget to remove the label from the top of the Power Supply Unit before turn on the power supply.

Alarm Output (C200HW-PA204C Only)

Connect the alarm output to a PC's Input Unit or external LED indicator to enable notification when Power Supply Unit replacement is required.
ON: Power Supply Unit replacement not required for at least 6 months.
OFF: Power Supply Unit replacement required within 6 months.

Output Specifications:

- Transistor open-collector output
- 30 VDC max., 50 mA max.
- ON: Residual voltage of 2 V max., OFF: Leakage current of 0.1 mA max.

PC Input Unit Wiring Example

Connect the positive terminals of the 24-VDC power supply to the Input Unit common (COM) terminals.

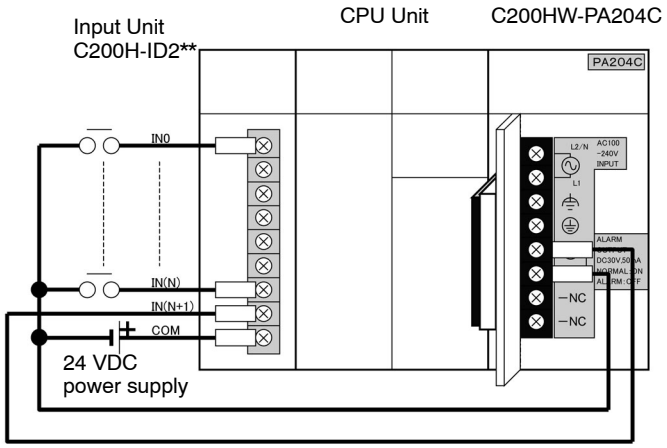

Connect the negative terminal of the 24-VDC power supply to the Input Unit common (COM) terminal.

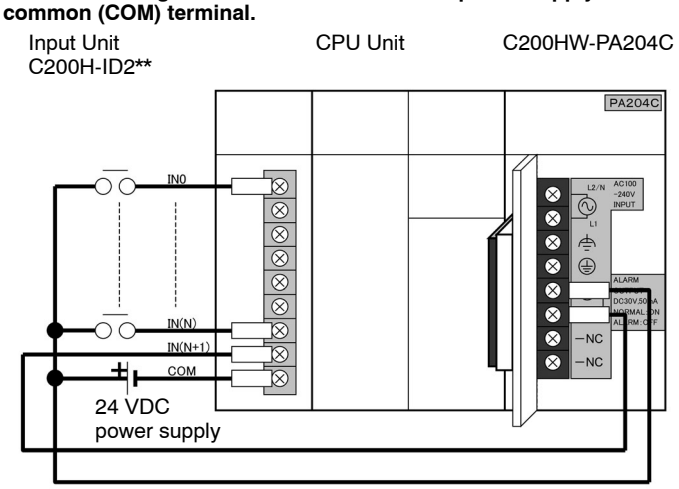

External Display Device Connection Example

The alarm output (replacement notification output) is an NC contact. Therefore, wire the alarm output using an NC contact or other means to turn ON an error indicator or LED display as shown in the following diagram.

Connect the positive terminals of the 24-VDC power supply to the Input Unit common (COM) terminals.

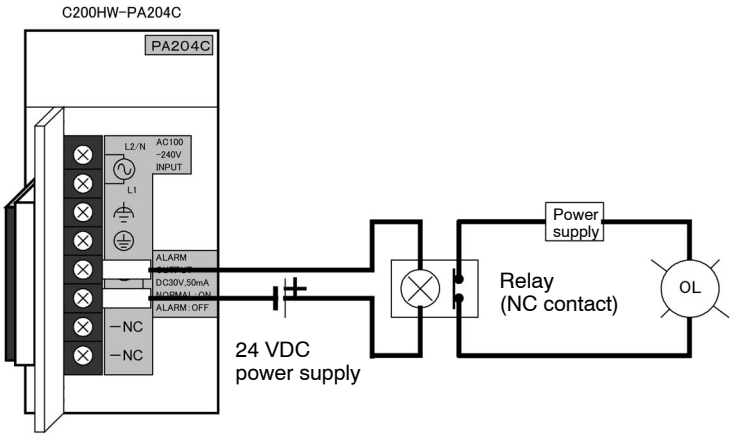

Note The OL display will also light if the PC's power supply fails.

- Separate the alarm output cables from power lines and high-voltage lines.
- Do not apply a voltage or connect a load to the alarm output that exceeds the rated voltage or load.

DC Power Supplies

Note

1. Do not remove the protective label from the top of the Unit before wiring. This label is to prevent wiring clippings and other foreign matter from entering the Unit during wiring procedures.
2. After completing the wiring, remove the protective label from the top of the Unit before starting operation. The Unit will overheat if operated with this label in place.

C200HW-PD024/C200HW-PD025
Power Supply Unit

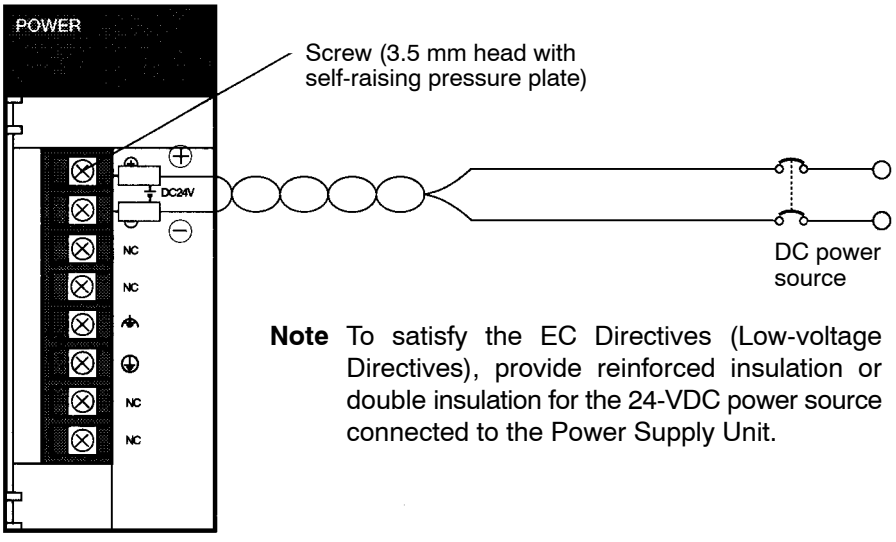

Note To satisfy the EC Directives (Low-voltage Directives), provide reinforced insulation or double insulation for the 24-VDC power source connected to the Power Supply Unit.

DC Power Source

Supply 24 VDC. Keep voltage fluctuations within the specified range (19.2 to 28.8 V).

Power Consumption

The power consumption will be 40 W max. per Rack for the C200HW-PD024 and 60 W max. per Rack for the C200HW-PD025, and there will be a surge current of at least 5 times the max. power when power is turned on.

Crimp Terminals

The terminals on the Power Supply Unit are M3.5, self-raising terminals with screws. Use crimp terminals for wiring. Do not connect bare stranded wires directly to terminals. Tighten the terminal block screws to the torque of 0.8 N • m. Use crimp terminals (M3.5) having the dimensions shown below.

Do not reverse the positive and negative poles when wiring the power supply terminals.

Supply power to all of the Power Supply Units from the same source.

Do not forget to remove the label from the top of the Power Supply Unit before turning on the power supply to ensure proper heat dissipation.

For satisfying the EC Directives (Low-voltage Directives), provide reinforced insulation or double insulation for the DC power supply used for the CPU Unit.

Grounding

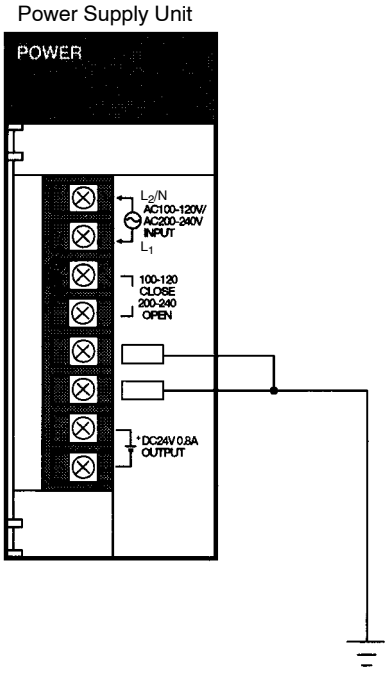

To avoid electrical shock, attach a grounded (earth ground) AWG 14 wire (cross-sectional area of at least 2 mm^2) to the GR terminal. The resistance to ground must be 100 Ω or less. Do not use a wire longer than 20 m. Care must be taken, because ground resistance is affected by environmental conditions such as soil composition, water content, time of year, and the length of time since the wire was laid underground.

The Line Ground (LG) terminal is a noise-filtered neutral terminal that does not normally require grounding. If electrical noise is a problem, however, this terminal should be connected to the Ground (GR) terminal.

PC operation may be adversely affected if the ground wire is shared with other equipment, or if the ground wire is attached to the metal structure of a building.

When using an Expansion I/O Rack, the Rack must also be grounded to the GR terminal. The same ground can be used for all connections.

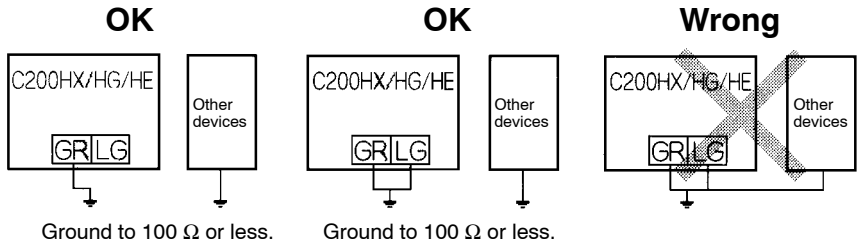

If grounding results in operating errors, insulate the CPU Backplane and all Expansion I/O Backplanes from the control panel. Refer to *Using the Antinoise Insulating Attachment* on page 77 for details.

Make sure that the C200HW-PA204C is wired correctly. The C200HW-PA204C terminals are wired differently from other Power Supply Units.

Crimp Terminals

The terminals on the Power Supply Unit are M3.5, self-raising terminals with screws. Use crimp terminals for wiring. Do not connect bare stranded wires directly to terminals. Tighten the terminal block screws to the torque of 0.8 N • m. Use crimp terminals (M3.5) having the dimensions shown below.

3-2-2 Standard I/O Unit Wiring

Caution Check the I/O specifications for the I/O Units, and consider the following points.

- Do not apply a voltage that exceeds the input voltage for Input Units or the maximum switching capacity for Output Units. Doing so may result in breakdown, damage or fire.
- When the power supply has positive and negative terminals, be sure to wire them correctly.

Note To satisfy the EC Directives (Low-voltage Directives), provide reinforced insulation or double insulation for the DC power source connected to the DC I/O Unit. Use a separate power source for the DC I/O Unit from the external power supply for the Contact Output Unit.

Electric Wires

The following electric wires are recommended.

Terminal Block Connector	Electric Wire Size
10-terminal	AWG 22 to 18 (0.32 to 0.82 mm^2)
19-terminal	AWG 22 (0.32 mm^2)

Note The allowable current capacity of electric wiring differs depending on factors such as ambient temperature, insulation thickness, etc., so be sure to take these factors into account when selecting electric wire.

Crimp Terminals

The terminals on the Power Supply Unit are M3.5, self-raising terminals with screws. Use crimp terminals for wiring. Do not connect bare stranded wires directly to terminals. Tighten the terminal block screws to the torque of 0.8 N • m. Use crimp terminals (M3.5) having the dimensions shown below.

For satisfying the EC Directives (Low-voltage Directives), provide reinforced insulation or double insulation for the DC power supply used for the I/O Units.

Wiring

Be sure that each Unit is securely mounted. In order to prevent wire scraps and other objects from getting inside of the Unit, keep the top-surface label on while wiring the Unit. After the wiring has been completed, be sure to remove the label in order to allow heat radiation.

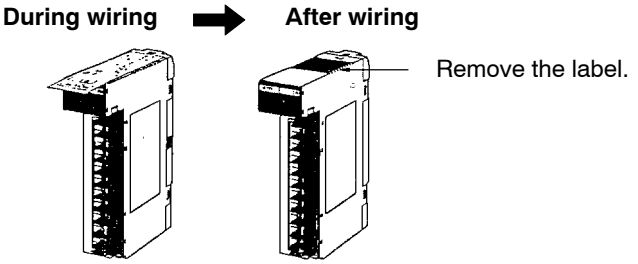

Wire the Units so that they can be easily replaced. In addition, make sure that the I/O indicators are not covered by the wiring.

Do not place the wiring for I/O Units together or in the same duct as power lines. Inductive noise can cause errors in operation.

Tighten the terminal screws to the torque of 0.8 N • m.

The terminals have screws with 3.5-mm diameter heads and self-raising pressure plates. Connect the lead wires to the terminals as shown below.

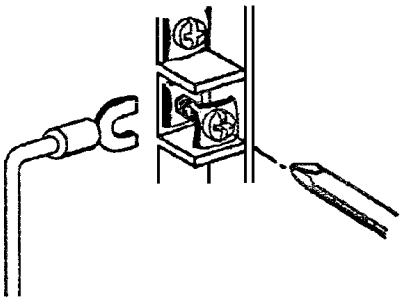

Terminal Blocks

Unlock the terminal block of an I/O Unit to remove the terminal block from the I/O Unit. You do not have to remove the lead wires from the terminal block in order to remove it from an I/O Unit.

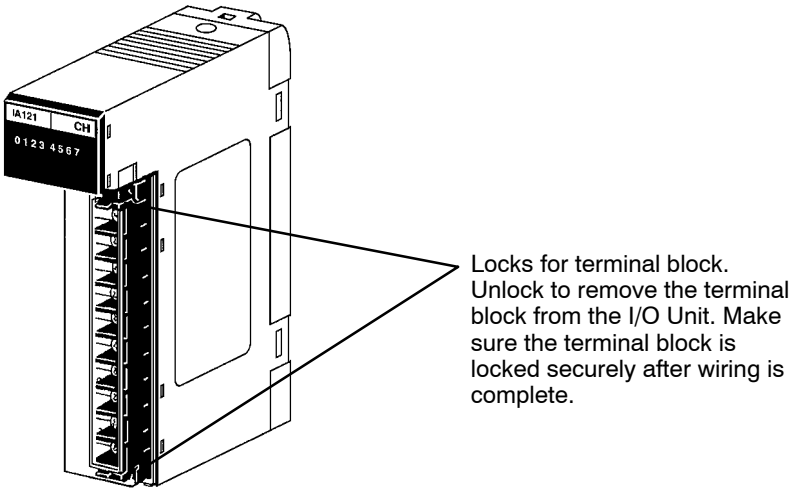

I/O Unit Covers

A C200H-COV11 Cover is provided as an I/O Unit cover for Units that use 10P terminal block connectors. After the I/O wiring has been completed, slide the cover up from the bottom, as shown in the illustration below. These Covers should be applied whenever the extra protection is required.

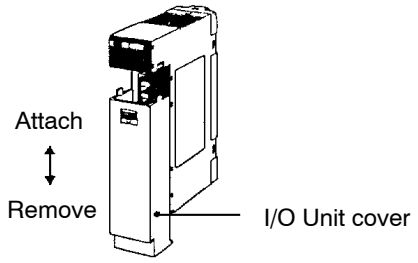

Input Devices

Observe the following information when selecting or connecting input devices.

DC Input Units

The following types of DC input devices can be connected.

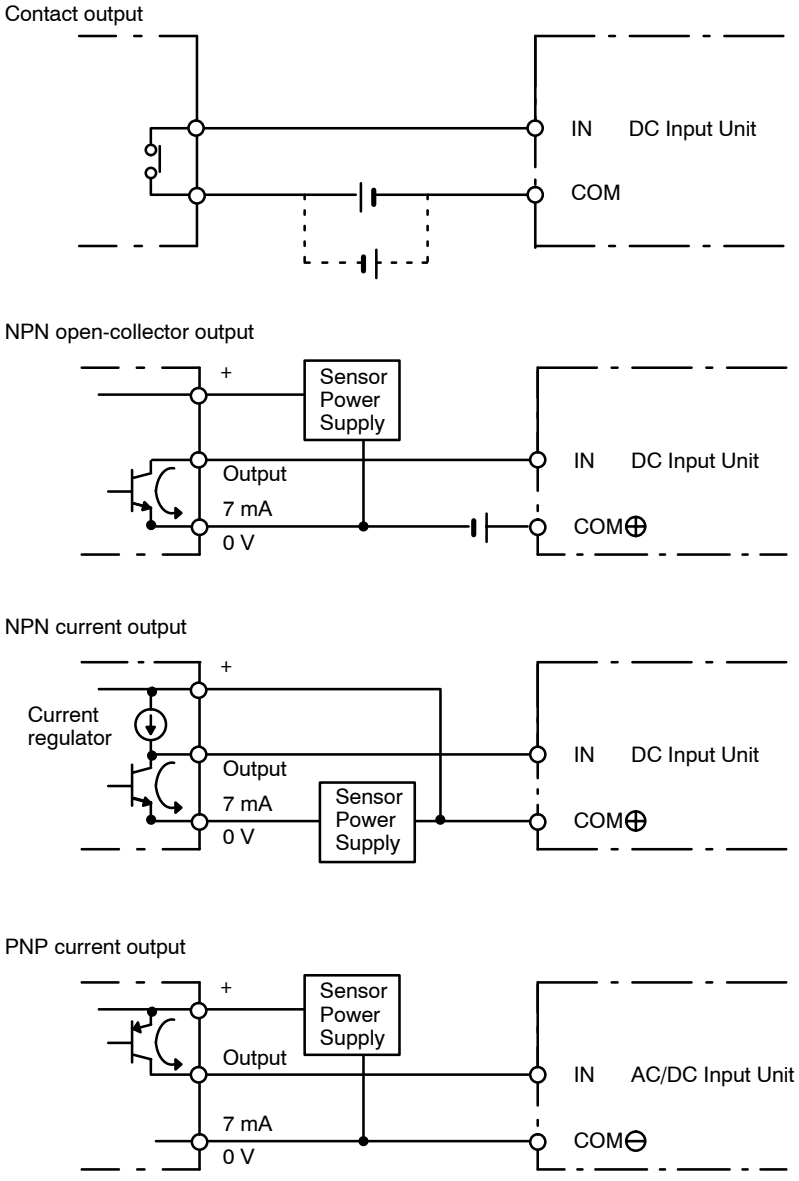

The circuit below should be used for I/O devices having a voltage output.

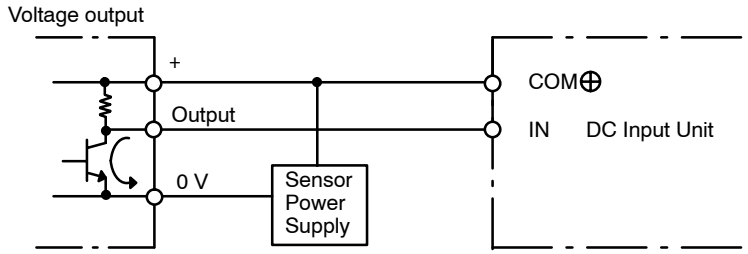

The circuit below should **NOT** be used for I/O devices having a voltage output.

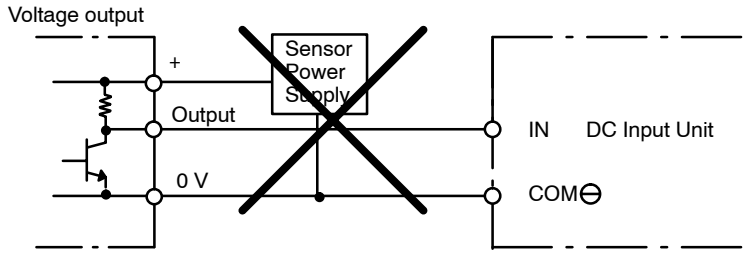

AC Input Units

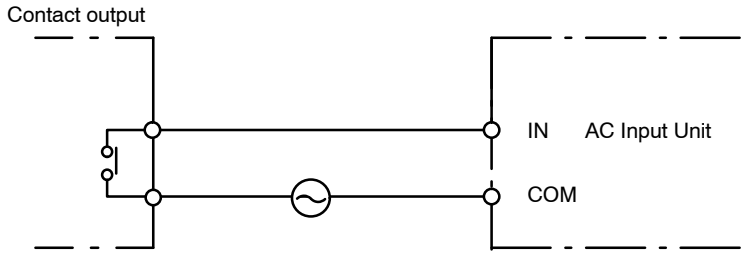

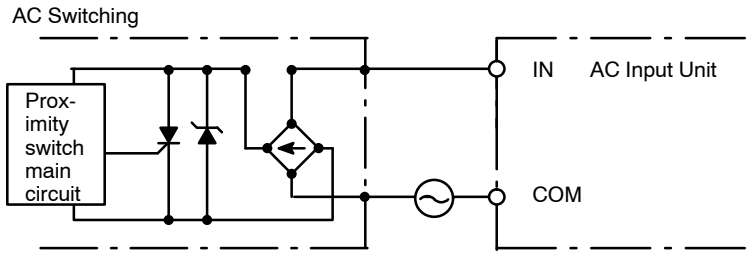

Note When using Reed switch as the input contact for an AC Input Unit, keep the allowable current to 1 A or greater. If Reed switches with smaller allowable currents are used, the contacts may fuse due to surge currents.

Input Leakage Current

When two-wire sensors, such as photoelectric sensors, proximity sensors, or limit switches with LEDs, are used, the input bit may be turned ON erroneously by leakage current. In order to prevent this, connect a bleeder resistor across the input as shown below.

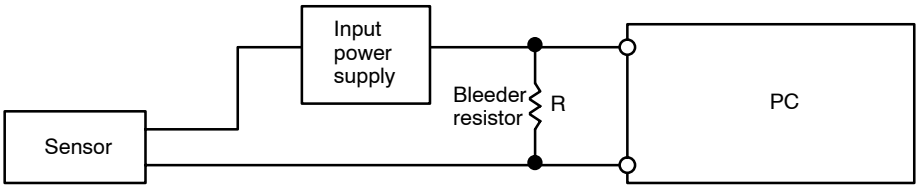

If the leakage current is less than 1.3 mA, there should be no problem. If the leakage current is greater than 1.3 mA, determine the resistance (R) and power rating (W) for the bleeder resistor using the following formulas.

For standard I/O Units:

I = leakage current in mA

$$R = \frac{7.2}{2.4 \times I - 3} \quad k\Omega \text{ max.}$$

$$W = \frac{2.3}{R} \quad W \text{ min.}$$

The previous calculations are based on the following equations.

$$I \times \frac{R \times \frac{\text{Input voltage (24)}}{\text{Input current (10)}}}{R + \frac{\text{Input voltage (24)}}{\text{Input current (10)}}} \leq \text{OFF voltage (3)}$$

$$W \geq \frac{\text{Input voltage (24)}}{R} \times \text{Input voltage (24)} \times \text{Tolerance (4)}$$

Precautions when Connecting a Two-wire DC Sensor

When using a two-wire sensor with a 12-VDC or 24-VDC input device, check that the following conditions have been met. Failure to meet these conditions may result in operating errors.

1, 2, 3...

1. Relation between voltage when the PC is ON and the sensor residual voltage:

   $V_{ON} \leqq V_{CC} - V_R$

2. Relation between voltage when the PC is ON and sensor control output (load current):

   I_{OUT} (min) $\leqq I_{ON} \leqq I_{OUT}$ (max.)
   $I_{ON} = (V_{CC} - V_R - 1.5$ [PC internal residual voltage]$)/R_{IN}$
   When I_{ON} is smaller than I_{OUT} (min), connect a bleeder resistor R. The bleeder resistor constant can be calculated as follows:

   $R \leqq (V_{CC} - V_R)/(I_{OUT}$ (min.) $- I_{ON})$
   Power $W \geqq (V_{CC} - V_R)^2/R \times 4$ [allowable margin]

Note The residual voltage in the PC is 4.0 V for the following Units:
C200H-ID211/ID212/IM211/IM212, C200HS-INT01
The residual voltage is 1.5 V for all other Units.

3. Relation between current when the PC is OFF and sensor leakage current:

   $I_{OFF} \geqq I_{leak}$

   Refer to *Input Leakage Current* later in this section for details.

   The I_{OFF} values differ for each Unit, but is always 1.3 mA for Input Units whose OFF current specifications are not given.

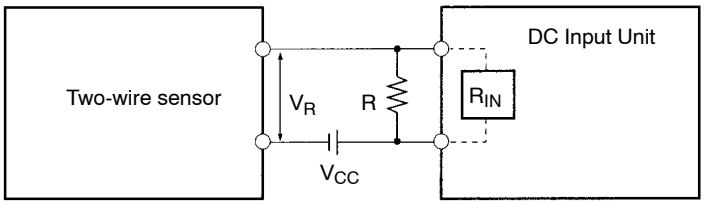

V_{CC}: Power voltage
V_{ON}: PC ON voltage
I_{ON}: PC ON current
I_{OFF}: PC OFF current
R_{IN}: PC input impedance
V_R: Sensor output residual current
I_{OUT}: Sensor control current (load current)
I_{leak}: Sensor leakage current
R: Bleeder resistance

Output Circuits

Output Short-circuit Protection

If a load connected to the output terminals is short-circuited, output elements and printed boards may be damaged. To guard against this, incorporate a fuse in the external circuit.

Transistor Output Residual Voltage

When connecting TTL circuits to transistor Output Units, it is necessary to connect a pull-up resistor and a CMOS IC between the two. This is because of the residual voltage left on the transistor output after the output turns OFF.

Output Leakage Current

If there is a possibility of leakage current causing a transistor or triac to malfunction, connect a bleeder resistor across the output as shown below.

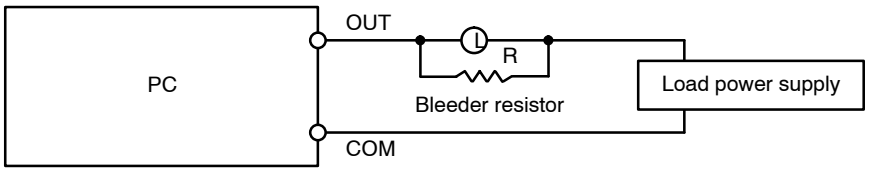

Determine the value and rating for the bleeder resistor using the following formula.

$$R < \frac{V_{ON}}{I}$$

Where

V_{ON} = ON voltage of the load in V

I = leakage current in mA

R = bleeder resistance in kΩ

Output Surge Current

When connecting a transistor or triac Output Unit to an output device having a high surge current (such as an incandescent lamp), care must be taken to avoid damage to the Output Unit. The transistor and triac Output Units are capable of withstanding a surge current of ten times the rated current. If the surge current for a particular device exceeds this amount, use the circuit shown below to protect the Output Unit.

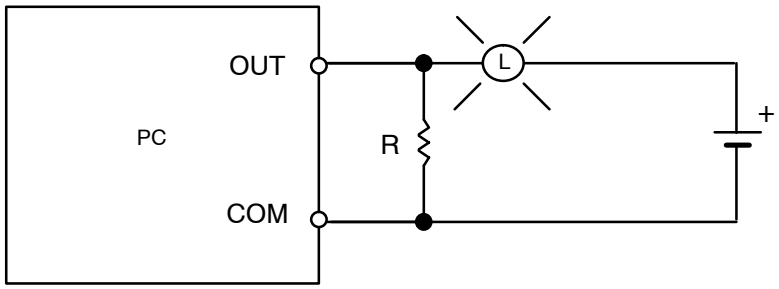

Another way of protecting the Output Unit lets the load draw a small current (about one third the rated current) while the output is OFF, significantly reducing the surge current. This circuit (shown below) not only reduces the surge current, but also reduces the voltage across the load at the same time.

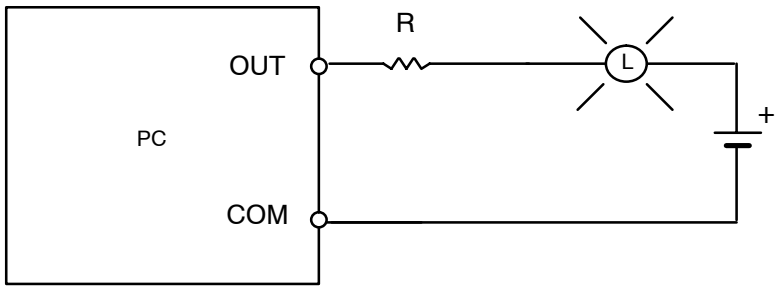

3-2-3 Electrical Noise

I/O Signal Lines

Whenever possible, place I/O signal lines and power lines in separate ducts or tubes. If placing them together cannot be avoided, use shielded cable to minimize the effects, and connect the shielded end to the GR terminal.

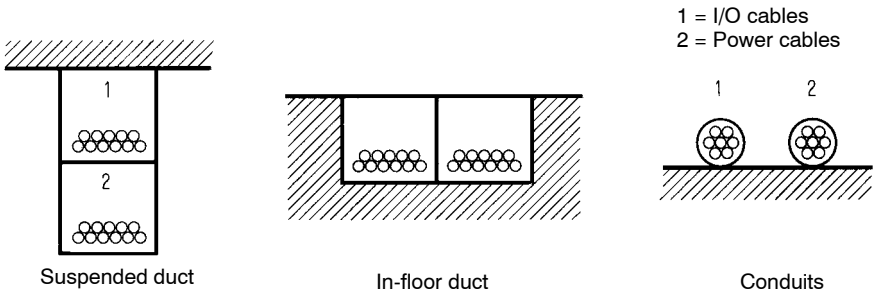

Inductive Load Surge Suppressor

When an inductive load is connected to an I/O Unit, it is necessary to connect a surge suppressor or diode in parallel with the load as shown below. This is so that the back EMF generated by the load will be absorbed.

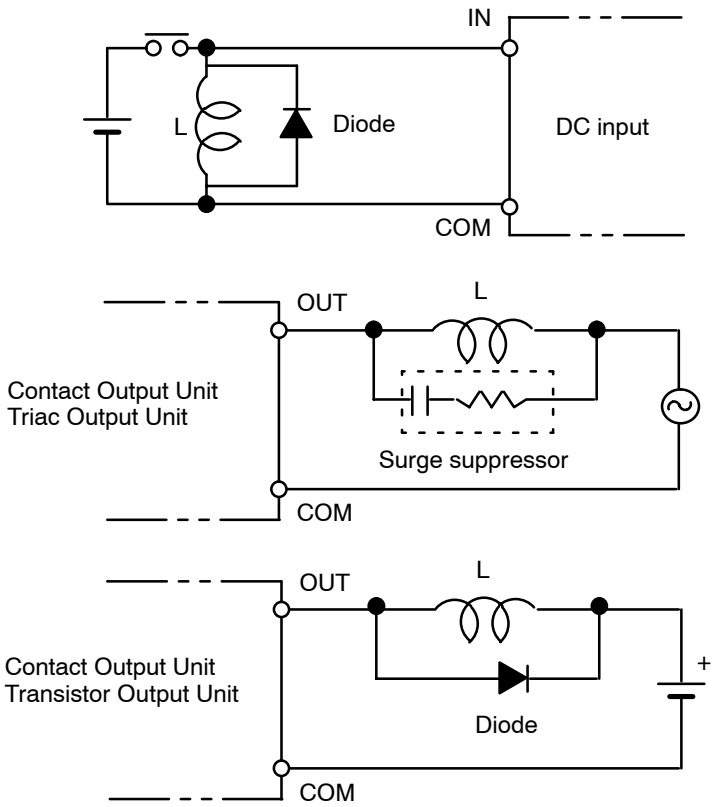

Note Use surge suppressors and diodes with the following specifications.

Surge Suppressor

Resistance:	50 Ω
Capacitor:	0.47 μF
Voltage:	200 V

Diode

Leading-edge peak inverse voltage:	At least 3 times load voltage
Average rectified current:	1 A

External Wiring

If power cables must be run alongside the I/O wiring (that is, in parallel with it), at least 300 mm must be left between the power cables and the I/O wiring as shown below.

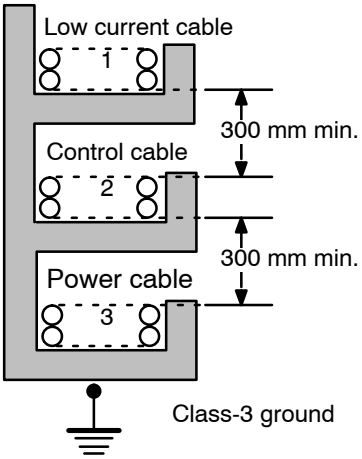

Where: 1 = I/O wiring
2 = General control wiring
3 = Power cables

If the I/O wiring and power cables must be placed in the same duct (for example, where they are connected to the equipment), they must be shielded from each other using grounded metal plates.

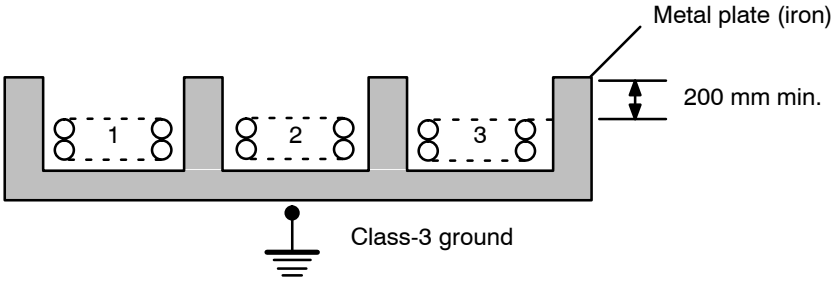

Where: 1 = I/O wiring
2 = General control wiring
3 = Power cables

Interlock Circuits

When the PC controls an operation such as the clockwise and counterclockwise operation of a motor, provide an external interlock such as the one shown below to prevent both the forward and reverse outputs from turning ON at the same time.

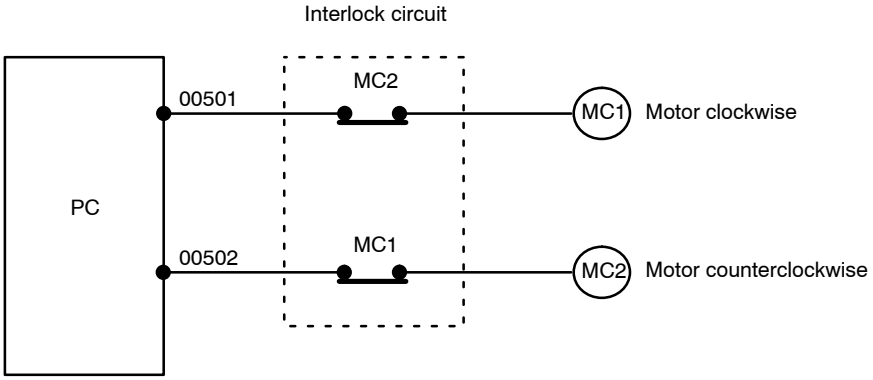

This circuit prevents outputs MC1 and MC2 from ever both being ON at the same time. Even if the PC is programmed improperly or malfunctions, the motor is protected.

Using the Antinoise Insulating Attachment

When using the C200HX/HG/HE CPU Unit near a power supply system, unwanted current paths may cause operating errors. If this occurs, use an Antinoise Insulating Attachment. If this Attachment is connected to the CPU Backplane and all Expansion I/O Backplanes, the PC will be insulated from the control panel. This will prevent external noise from entering the PC.

Antinoise Insulating Attachments must be purchased separately using the following model number.

Model	Quantity
C200HW-ATT01	Four attachments included

Dimensions (Unit: mm)

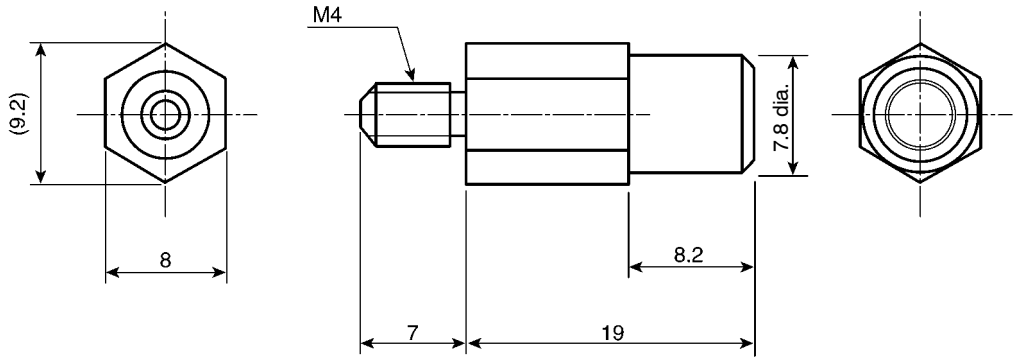

Insulating Method for Backplanes

As shown in the following diagram, connect the Attachments to the control panel first (four locations) and then tighten the screws. The recommended tightening torque is 1.2 N • m.

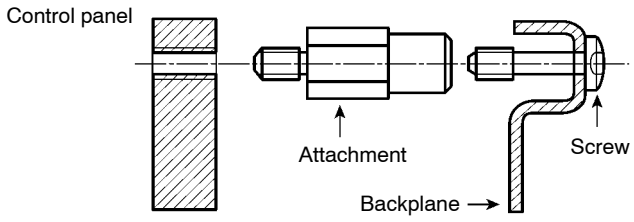

Precautions

- Always attach the Attachments as shown above.
- When the Attachments are used to mount the Backplanes, the height of the Rack will be increased by approximate 10 mm. Confirm that the front of the Units, cables, or other parts of the PC do not come into contact with other devices.
- If the installation environment is subject to noise, then noise can also enter on the power supply line. If necessary, use noise filters or insulating transformers to remove noise from the power supply line.

Power Interruptions

A sequential circuit is built into the PC to handle power interruptions. This circuit prevents malfunctions due to momentary power loss or voltage drops. A timing diagram for the operation of this circuit is shown below.

The PC ignores all momentary power failures if the interruption lasts no longer than 10 ms (no longer than 2 ms for a DC Power Supply). If the interruption lasts

between 10 and 25 ms (between 2 and 5 ms for a DC Power Supply), the interruption may or may not be detected. If the supply voltage drops below 85% of the rated voltage for longer that 25 ms (less for the DC Power Supply), the PC will stop operating and the external outputs will be automatically turned OFF.

Operation is resumed automatically when the voltage is restored to more than 85% of the rated value. The diagram below shows the timing of PC operation and stopping during a power interruption. The time it takes to detect the power failure is shorter when the power supply is DC. Also, the voltage value for which the C200HX/HG/HE will stop due to a drop in the power supply voltage will be lower than that for AC.

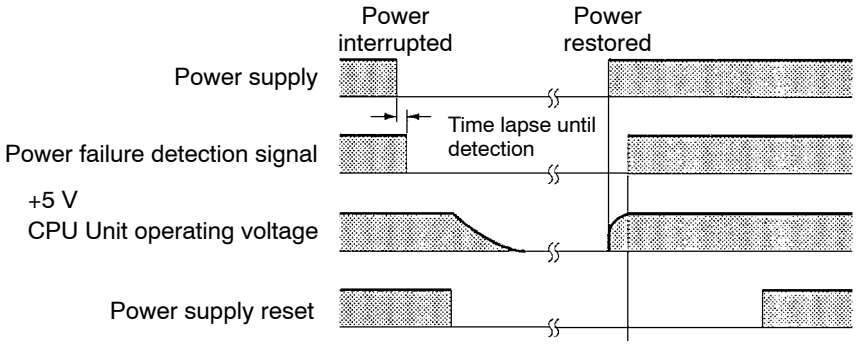

SECTION 4
Programming Console Operation

This section describes the function of the Programming Console and its connection methods.

4-1 Using the Programming Console 82
4-1-1 Nomenclature 82
4-1-2 Connecting the Programming Console 83
4-2 Checking Initial Operation 84

4-1 Using the Programming Console

4-1-1 Nomenclature

The front panel of the Programming Console is shown below, taking the C200H-PRO27-E as an example.

C200H-PRO27-E Programming Console

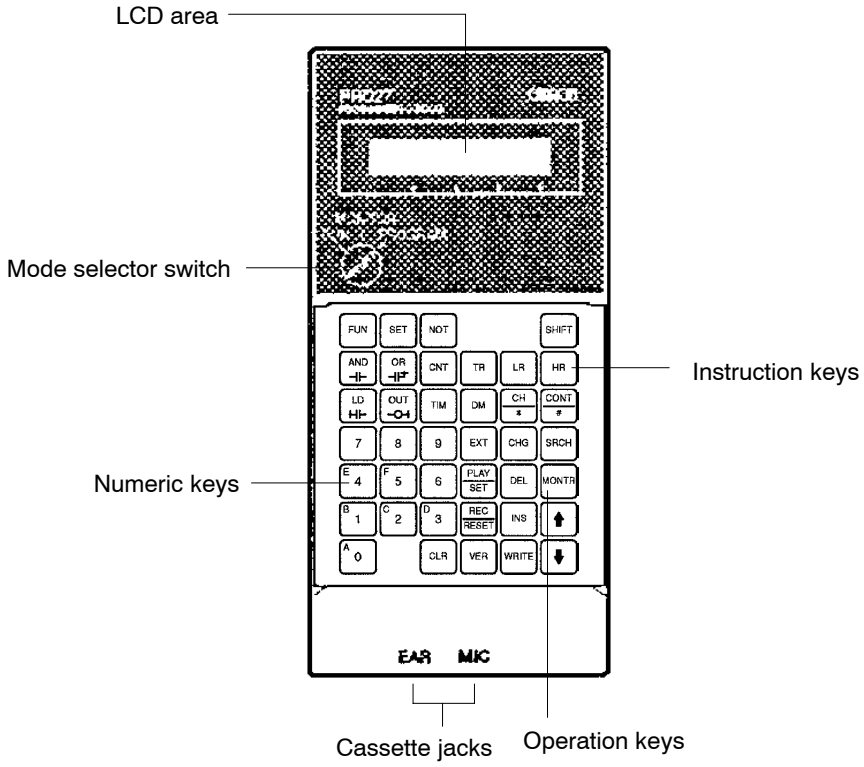

LCD Area This window displays the program contents and monitor status.

Mode Selector Switch

PROGRAM MODE:	Used for creating programs.
RUN MODE:	Used for executing the programs.
MONITOR MODE:	Used for monitoring PC status.

Keys Instruction, numeric, and operation keys are used for inputting the program and data.

Note
1. The operations of C200H-PRO27-E and CQM1-PRO01-E Programming Consoles are the same.
2. The following keys look different but have the same functions.

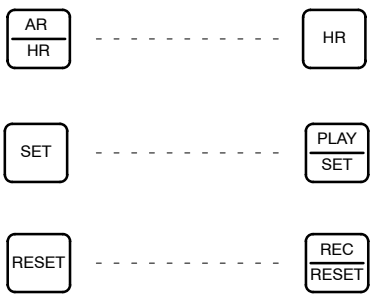

4-1-2 Connecting the Programming Console

There are two Programming Console models that can be used with the C200HX/C200HG/C200HE: the C200H-PRO27-E and the CQM1-PRO01-E. The following illustration shows how a Programming Console (a C200H-PRO27-E in this case) connects to the C200HX/C200HG/C200HE CPU Unit.

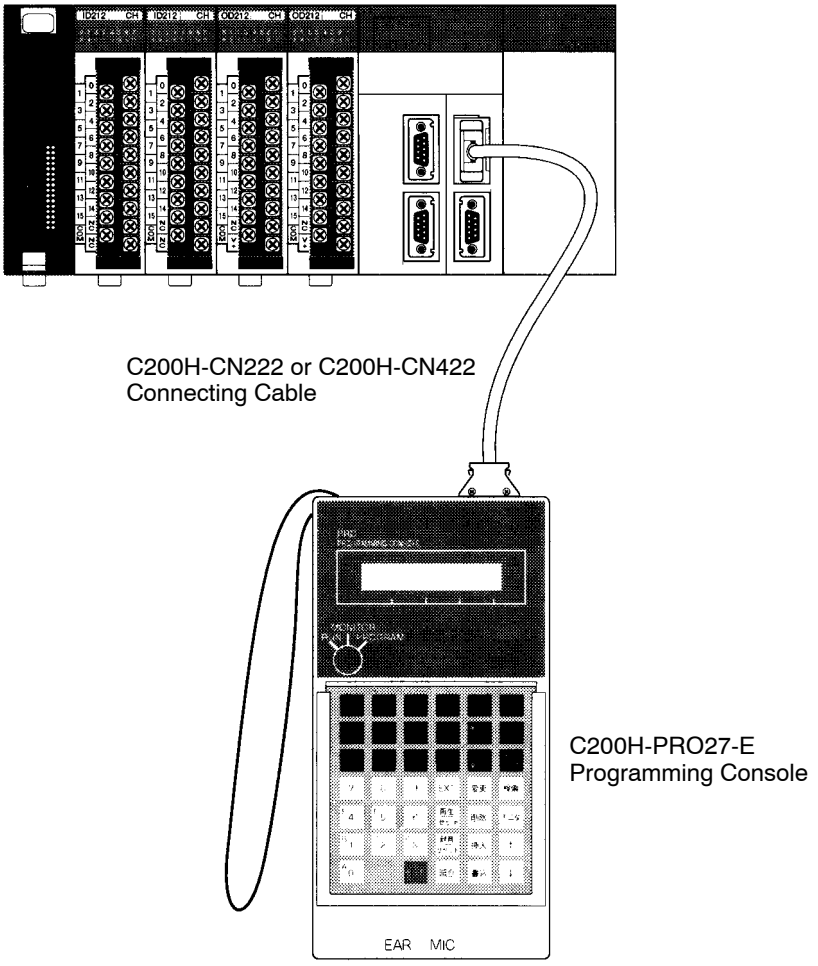

As indicated in the illustration, the C200H-PRO27-E Programming Console connects to the C200HX/C200HG/C200HE CPU Unit with C200H-CN222 (2 m) or C200H-CN422 (4 m) Connecting Cable, which must be purchased separately.

The CQM1-PRO01-E Programming Console comes with 2 m of Connecting Cable.

4-2 Checking Initial Operation

After the Programming Console has been connected, it can be used to check initial C200HX/C200HG/C200HE operation. Make sure that the Programming Console is properly connected and that the correct power supply is being provided, and then follow the procedure outlined below.

1, 2, 3...

1. Check to be sure that the Programming Console is in PROGRAM mode.

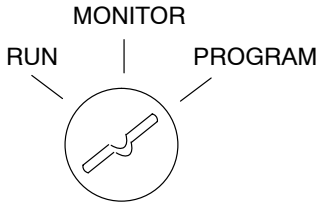

2. Turn on the power to the PC and check the CPU Unit indicators. The green POWER indicator should light.

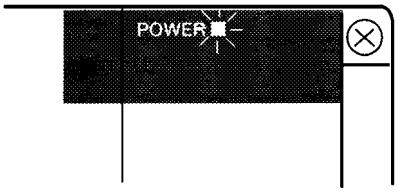

3. Check the Programming Console display and input the password (Clear and then Monitor Keys). If operation is normal, the display should appear as shown below.

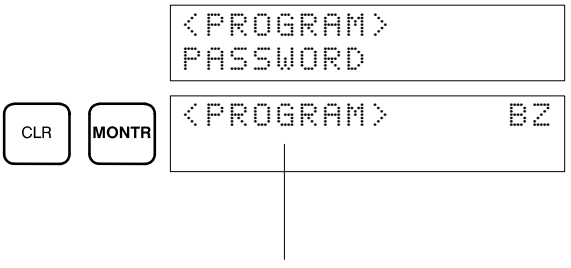

Indicates the mode set by the mode selector switch.

Note If the mode is not indicated, turn off and restart the power supply.

4. After checking PC operation, turn off the power. If operation is not normal, refer to *5-1 Troubleshooting*.

SECTION 5
Troubleshooting, Inspections, and Maintenance

The C200HX/C200HG/C200HE provides self-diagnostic functions to identify many types of abnormal system conditions. These functions minimize downtime and enable quick, smooth error correction.

This section provides information on hardware and software errors that occur during PC operation. It also provides inspection and maintenance information that can be used to help prevent the occurrence of errors.

5-1 Troubleshooting 86
5-2 Inspection and Maintenance 89
5-2-1 Replacing Output Unit Fuses 89
5-2-2 Replacing Relays 90
5-2-3 Batteries 93
5-3 Inspections 94
5-4 Using Power Supply Units with Replacement Notification 95

5-1 Troubleshooting

CPU Racks and Expansion I/O Racks

Error	Probable cause	Possible correction
POWER indicator does not light.	The voltage selector terminal setting is wrong. (A 100-VAC voltage is used when set to 200 VAC.)	Correct the voltage selector terminal setting.
	The 24-V output terminals are externally shorted.	Correct the wiring. And power is supplied again.
	An internal fuse has blown. The Power Supply Unit is broken. (A 200-VAC voltage was used when set to 100 VAC.)	Replace the Power Supply Unit.
	There is a short-circuit in the internal power supply. (There is a short-circuit in the 5/26-VDC supplied by the Power Supply Unit in a Unit on the Rack.)	Replace the Unit with the short-circuit.
RUN indicator does not light.	The program has an error (no END instruction).	Correct the program.
	A power supply line is defective.	Replace the CPU Unit.
	Special I/O Units are assigned overlapping unit numbers.	Correct the unit number assignments.
	A Slave Unit's power supply is turned off, or no Unit is set as the terminator.	Turn on the power to the Slave Unit, or set a Unit as the terminator.
RUN indicator is lit, but RUN output does not turn on.	The power circuit is defective.	Replace the CPU Unit.
Relays do not operate from a particular number onwards.	The I/O bus is defective.	Replace the Backplane.
Outputs (or inputs) turn ON for particular Relay numbers.		
All the bits from a particular Unit turn ON.		

Input Units

Error	Probable cause	Possible correction
Indicator lights are turned off, and no inputs turn ON.	No external input power supply is provided.	Provide a power supply.
	The external input voltage is low.	Supply the rated voltage.
	Terminal screws are loose.	Tighten the terminal screws.
	Terminal block connectors are making poor contact.	Securely lock the connectors, or replace them if necessary.
Indicator lights are turned ON, but no inputs turn ON.	The input circuit is defective.	Replace the Unit.
All inputs remain ON, and will not turn OFF.	The input circuit is defective.	Replace the Unit.
Inputs do not turn ON for particular Relay numbers.	An input device is defective.	Replace the input device.
	Input wiring is disconnected.	Check the input wiring.
	Terminal screws are loose.	Tighten the terminal screws.
	Terminal block connectors are making poor contact.	Securely lock the connectors, or replace them if necessary.
	The ON time for external inputs is too short.	Adjust the input device.
	The input circuit is defective.	Replace the Unit.
	An input bit address is used for an OUT instruction in the program.	Correct the program.
Inputs do not turn OFF for particular Relay numbers.	The input circuit is defective.	Replace the Unit.
	An input bit address is used for an OUT instruction in the program.	Correct the program.
Inputs are turning ON and OFF irregularly.	The external input voltage is low.	Supply the rated voltage.
	There is malfunctioning due to noise.	Apply noise countermeasures such as installing a surge suppressor, installing an isolation transformer, and using shielded cables.
	Terminal screws are loose.	Tighten the terminal screws.
	Terminal block connectors are making poor contact.	Securely lock the connectors, or replace them if necessary.
Malfunctioning Relays are in groups of eight.	Common terminal screws are loose.	Tighten the terminal screws.
	Terminal block connectors are making poor contact.	Securely lock the connectors, or replace them if necessary.
	The CPU Unit is defective.	Replace the CPU Unit.
Operation is normal, but the input indicator does not light.	The LED is defective.	Replace the Unit.

Output Units

Error	Probable cause	Possible correction
No outputs turn ON.	A load power supply is not provided.	Provide the power supply.
	The load power supply voltage is low.	Provide the rated voltage.
	Terminal screws are loose.	Tighten the terminal screws.
	Terminal block connectors are making poor contact.	Securely lock the connectors, or replace them if necessary.
	A fuse is blown.	Replace the fuse.
	I/O bus connectors are making poor contact.	Replace the Unit.
	The output circuit is defective.	Replace the Unit.
Outputs all fail to turn OFF.	The output circuit is defective.	Replace the Unit.
Indicators do not light, and the outputs for particular Relay numbers do not turn ON.	The output ON time is too short.	Correct the program.
	The output circuit is defective.	Replace the Unit.
	The program's OUT instruction bit addresses overlap.	Correct the program.
Indicators light, but the outputs for particular Relay numbers do not turn ON.	An output device is defective.	Replace the output device.
	Output wiring is disconnected.	Check the output wiring.
	Terminal screws are loose.	Tighten the terminal screws.
	Terminal block connectors are making poor contact.	Securely lock the connectors, or replace them if necessary.
	Output Relays are defective.	Replace the Relays.
	The output circuit is defective.	Replace the Unit.
Indicator lights are off, but the outputs for particular Relay numbers do not turn OFF.	Output Relays are defective.	Replace the Relays.
	There is faulty restoration due to leakage current or residual current.	Replace the external load or add a dummy resistor.
Indicators light, and the outputs for particular Relay numbers do not turn OFF.	The output circuit is defective.	Replace the Unit.
	The program's OUT instruction bit addresses overlap.	Correct the program.
Outputs are turning ON and OFF irregularly.	The load power supply voltage is low.	Supply the rated voltage.
	The program's OUT instruction bit addresses overlap.	Correct the program.
	There is malfunctioning due to noise.	Apply noise countermeasures such as installing a surge suppressor, installing an isolation transformer, using shielded cables, or attaching the Insulating Attachments.
	Terminal screws are loose.	Tighten the terminal screws.
	Terminal block connectors are making poor contact.	Securely lock the connectors, or replace them if necessary.
Malfunctioning Relays are in groups of eight.	Common terminal screws are loose.	Tighten the terminal screws.
	Terminal block connectors are making poor contact.	Securely lock the connectors, or replace them if necessary.
	A fuse is blown.	Replace the fuse.
	The CPU Unit is defective.	Replace the CPU Unit.
Operation is normal, but the output indicator does not light.	The LED is defective.	Replace the Unit.

5-2 Inspection and Maintenance

5-2-1 Replacing Output Unit Fuses

The following Output Units each contain one fuse. Replace the fuse if the fuse indicator lights. The OD211, OD212, OA222, and OA224 Output Units do not have fuse indicators. Replace the fuses on these Units if outputs are not produced.

Unit	Fuse indicator	Capacity (20 mm long x 5.2 mm dia.)
C200H-OD411	Yes	125 V, 5 A
C200H-OD211	No	
C200H-OD212	No	125 V, 8 A
C200H-OD213	Yes	
C200H-OA221	Yes	250 V, 5 A
C200H-OA222V	No	250 V, 3 A
C200H-OA223	Yes	250 V, 5 A
C200H-OA224	No	250 V, 3.15 A

The OD411, OD213, OA221 and OA223 Output Units also provide an external output bit that can be used to check the condition of the fuse. If bit 08 of the word allocated to the Unit is ON, the fuse is burnt out.

To replace a fuse, follow the steps below. Use only UL/CSA certified replacement fuses.

1, 2, 3...

1. Turn OFF the power to the PC.
2. Detach the terminal block by unlocking the lock levers at the top and bottom of the terminal block.
3. While pushing down the lock lever on the Backplane with a screwdriver as shown below, remove the Output Unit.

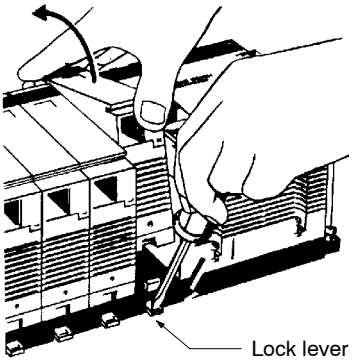

4. Using a Phillips screwdriver, remove the screw from the top of the Unit.
5. Using a flat-blade screwdriver, detach the case from the Unit.

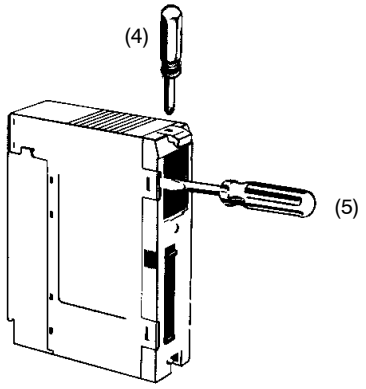

6. Pull out the printed circuit board.
7. Insert a new fuse. A spare fuse is provided inside the rear of the case when the Unit is delivered.

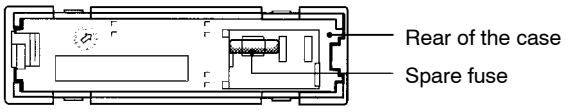

8. Reassemble in reverse order of assembly.

Note
1. Use UL or CSA approved fuses if the UL or CSA standards must be satisfied. For further details, consult the fuse manufacturer.
2. Fuses in High-density I/O Units cannot be replaced by the user. Refer to your OMRON dealer for service.

5-2-2 Replacing Relays

Replacement Relay

The following Output Units provide relay sockets that allow the Relays to be replaced if they should go bad. Use the Relay listed in the table.

Output Unit	Relay
C200H-OC221	G6B-1174P-FD-US–M 24 VDC
C200H-OC222	
C200H-OC223	
C200H-OC224	
C200H-OC225	
C200H-OC222V	G6R-1, 24 VDC
C200H-OC224V	
C200H-OC226	

Use the following procedure to replace a Relay.

Note The relays on the C200H-OC222N, C200H-OC224V, and C200H-OC226 cannot be replaced.

1, 2, 3...
1. Turn OFF the power to the PC.
2. Detach the terminal block by unlocking the lock levers at the top and bottom of the terminal block.

3. While pushing down the lock lever on the Backplane with a screwdriver as shown below, remove the Output Unit.

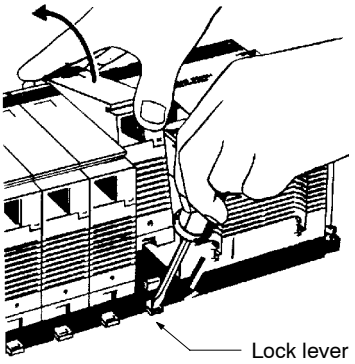

4. Using a Phillips screwdriver, remove the screw from the top of the Unit.
5. Using a flat-blade screwdriver, detach the case from the Unit.

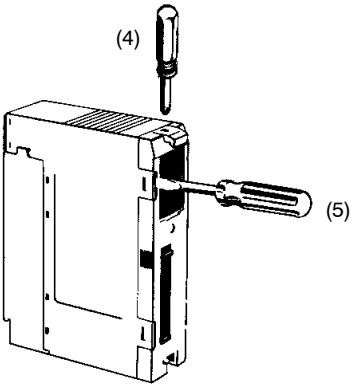

6. Pull out the printed circuit board. The Relays are placed on the PC boards of individual Units as shown in the figures below.
7. A Relay puller is provided inside the rear of the case when the Unit is delivered. Use the Relay puller to pull out the Relay as shown below. Insert a new Relay.

   Relays for the C200H-OC222V/OC224V/OC226V can be replaced without using the Relay puller.

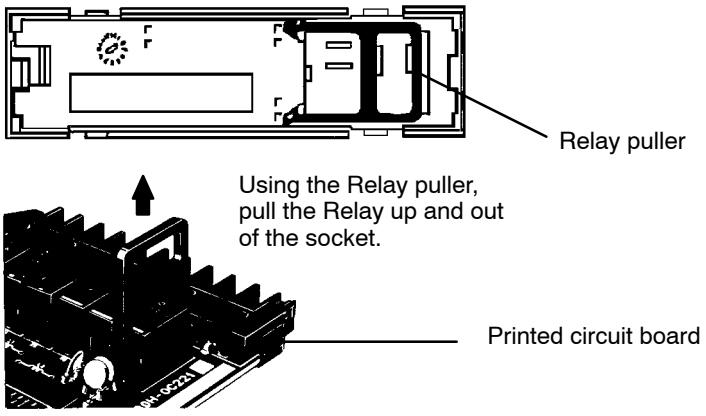

8. Reassemble in reverse order of assembly.

Caution Check the pin arrangement before inserting a new Relay into the socket. Pins can only be inserted one way, so do not try to force them if they do not go in easily. Applying too much force can bend the pins and render them unusable.

OC221/OC224

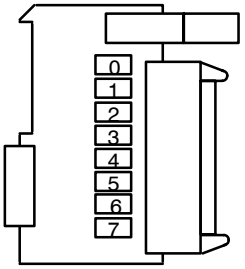

OC222

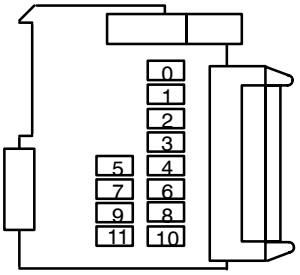

OC223

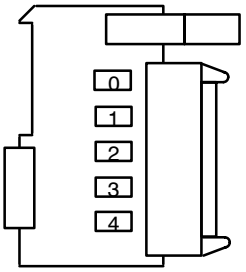

OC225

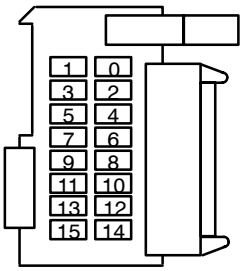

OC222V

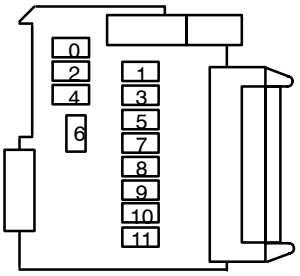

OC224V

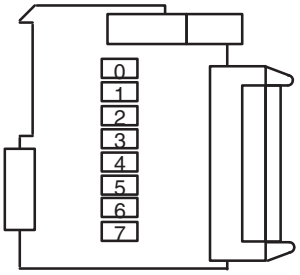

OC226

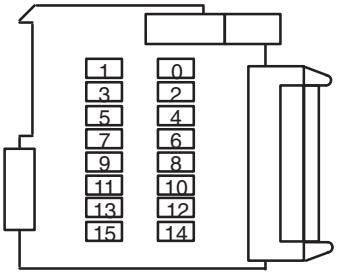

Note The relays on the C200H-OC222N, C200H-OC224V, and C200H-OC226 cannot be replaced.

5-2-3 Batteries

⚠ **DANGER** Batteries can burn, explode, or leak. Absolutely do not short-circuit across the terminals, attempt to recharge batteries, or take them apart, heat them, or expose them to fire.

When the battery is nearly discharged, the ERR indicator will flash and the message “BATT FAIL” will appear on the Programming Console. When this occurs, replace the battery within one week to avoid loss of data.

The normal battery service life is five years at 25°C. The service life will be shorten if used at higher temperatures.

The Battery Fail Flag is allocated to 25308 for the C200HX/C200HG/C200HE.

The battery comes together with its connector as a set. To replace the Battery Set (C200H-BAT09), follow the steps below. The entire replacement must be completed within five minutes to ensure that the data will not be lost.

Note Mount the new battery within 5 minutes of turning OFF the power supply. If there is no battery for more than 5 minutes, retained data may be lost.
Due to the application length and environment, data may be lost in less than 5 minutes. Always backup the data (including the user program, DM Area, and EM Area) from the Support Software before you turn OFF the power supply to the PLC.

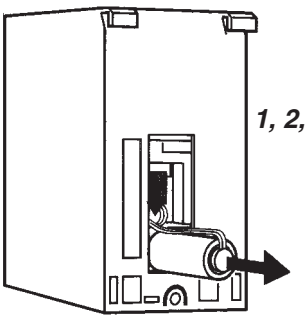

1, 2, 3...

1. Turn OFF the power to the PC. (If the power has not already ON, turn the power ON for at least one minute before turning the power OFF.)
2. Remove the CPU Unit from CPU Backplane.
3. Open the cover of the battery compartment on the back of the CPU Unit.
4. Pull out the loose cable, lift the battery free from the lock lever, hold onto the battery, and pull it out.

5. Disconnect the connector while pressing down on the bundled cable.
6. Attach the connector of the new battery, press up on the bundled cable with your finger, and press the battery in and below the lock lever.
7. Place the rest of the cable into the battery storage compartment and close the cover. (This procedure must be completed within 5 minutes.)

5-3 Inspections

Daily and periodic inspections are required to keep PCs working in top condition. PC are constructed out of semiconductor components, which although have an extremely long life time, can deteriorate under improper environmental conditions. Periodic inspections are thus required to ensure that the required conditions are being kept.

Inspection is recommended at least once every six months to a year, but more frequent inspections will be necessary in adverse environments.

Take immediate steps to correct the situation if any of the conditions in the following table are not met.

No.	Item	Contents	Criteria	Remarks
1	Main power supply	Check the voltage fluctuations at the power supply terminals.	The voltage must be within the allowable voltage fluctuation (see following table)	Voltage tester
2	Ambient environment	Measure the temperature inside the control panel.	Temperature must be 0 to 55 °C.	Thermometer
		Measure the humidity inside the control panel.	Humidity must be 35% to 85%.	Humidity meter
		Check for dirt and dust.	There must be no collection of dirt and dust.	Visual
3	I/O power supply	Check the voltage fluctuations at the I/O terminals.	Voltages must be within specifications for each Unit.	Voltage tester
4	Installation	Check the mounting of all Units.	The Units must be firmly mounted.	Phillips screwdriver
		Check all cable connections.	The cables must be firmly connected.	Phillips screwdriver
		Check all external wiring screws.	The screws must be firmly tightened.	Visual
		Check all external wiring cables.	The cables must not be damaged in any way.	Visual
5	Consumable parts	Contact output Relays: G6B-1174P-FD-US-M 24 VDC	Electrical life Resistive loads: 300,000 operations Inductive loads: 100,000 operations Mechanical life: 50 million operations	---
		Battery: C200H-BAT09	Expected life: 5 yrs at 25 °C	---

Voltage Fluctuation

Power supply voltage	Allowable voltage fluctuation
100 to 120 VAC	85 to 132 VAC
200 to 240 VAC	170 to 264 VAC
24 VDC	19.2 to 28.8 VDC

Handling Precautions

- Always turn off the power supply before replacing a Unit.
- After replacing a faulty Unit, check the new Unit to make sure that the same problem does not appear again.
- When returning a Unit for repairs, provide as many details about the problem as possible in writing and attach it to the Unit before delivering it to your OMRON representative. (See inside back cover for regional offices.)
- To clean bad contacts, use a clean cotton cloth soaked in industrial alcohol and be sure to remove any threads from the cloth before mounting the Unit.

Inspection Tools

- **Required Tools**
  - Screwdrivers (flat-blade and Phillips)
  - Voltage tester (analog or digital)
  - Industrial alcohol and a clean cotton cloth
- **Tools Required in Special Cases**
  - Synchroscope
  - Oscilloscope with pen plotter
  - Thermometer and humidity meter

5-4 Using Power Supply Units with Replacement Notification

Be sure to check the display when using a C200HW-PA204C Power Supply Unit with Replacement Notification.
For details on the Unit's functions, displays, and contact outputs, refer to *Appendix E Power Supply Units with Replacement Notification*.

Appendix A
Standard Models

CPU Rack

Name	Specifications				Model number
CPU Units (All models are provided with clock function and slots for communications except CPU11-E/ZE.) 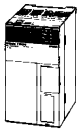	UM	EM	I/O points	RS-232C	---
	3.2K words	None	640	No	C200HE-CPU11-E/ZE
	7.2K words		880	No	C200HE-CPU32-E/ZE
				Yes	C200HE-CPU42-E/ZE
	15.2K words	6K words (1 bank)	880	No	C200HG-CPU33-E/ZE
				Yes	C200HG-CPU43-E/ZE
			1,184	No	C200HG-CPU53-E/ZE
				Yes	C200HG-CPU63-E/ZE
	31.2K words	18K words (3 banks)	880	No	C200HX-CPU34-E/ZE
				Yes	C200HX-CPU44-E/ZE
			1,184	No	C200HX-CPU54-E/ZE
				Yes	C200HX-CPU64-E/ZE
	63.2K words	48K words (8 banks)	1,184	Yes	C200HX-CPU65-ZE
		96K words (16 banks)	1,184	Yes	C200HX-CPU85-ZE
Power Supply Units	Power supply voltage: 100 to 240 VAC (wide range) Output: 4.6 A at 5 V, 0.625 A at 26 V				C200HW-PA204
	Power supply voltage: 100 to 120/200 to 240 VAC (selectable) Output: 4.6 A at 5 V, 0.625 A at 26 V External output: Output terminals, 0.8 A at 24 VDC				C200HW-PA204S
	Power supply voltage: 100 to 240 VAC (wide range) Output: 4.6 A at 5 V, 0.625 A at 26 V RUN output (SPST-NO contact): Switching capacity: 2 A for resistive loads/0.5 A for inductive loads at 250 VAC; 2 A at 24 VDC See page 23 for CPU Unit and Backplane restrictions.				C200HW-PA204R
	Power supply voltage: 100 to 120/200 to 240 VAC (selectable) Output: 9.0 A at 5 V, 0.6 A at 26 V RUN output (SPST-NO contact): Switching capacity: 2 A for resistive loads at 240 VAC; 0.5 A for inductive loads at 120 VAC; 2 A at 24 VDC See page 23 for CPU Unit and Backplane restrictions.				C200HW-PA209R

Name	Specifications	Model number
Power Supply Units (Equipped with replacement notification function)	Power supply voltage: 100 to 240 VAC (wide range) Output: 4.6 A at 5 V, 0.625 A at 26 V Alarm output with replacement notification function Transistor (open collector) Switching capacity:50 mA max. at 30 VDC max.	C200HW-PA204C
Power Supply Units	Power supply voltage: 24 VDC Output: 4.6 A at 5 V, 0.625 A at 26 V	C200HW-PD024
	Power supply voltage: 24 VDC Output: 5.3 A at 5 V, 1.3 A at 26 V	C200HW-PD025
CPU Backplanes	3 slots	C200HW-BC031
	5 slots	C200HW-BC051
	8 slots (see note)	C200HW-BC081-V1
	10 slots (see note)	C200HW-BC101-V1

Note There are restrictions in combining Backplanes and Power Supply Units when using the C200HW-PA209R Power Supply Unit with an 8-slot or 10-slot CPU Backplane or Expansion I/O Backplane.

Name	Specifications		Model number
Memory Cassettes	EEPROM	4K words	C200HW-ME04K
		8K words	C200HW-ME08K
		16K words	C200HW-ME16K
		32K words	C200HW-ME32K
		64K words (see note)	C200HW-ME64K
	EPROM	16K words/32K words	C200HS-MP16K
		Correction (Click)	ROM-JD-B
			ROM-KD-B
Communication Boards (See note.)	Communications port for SYSMAC LINK and SYSMAC NET Link Units		C200HW-COM01
	RS-232C port		C200HW-COM02-V1
	RS-422/485 port		C200HW-COM03-V1
	Communications port for the SYSMAC LINK Unit and SYSMAC NET Link Unit and a protocol macro function		C200HW-COM04-EV1
	Two RS-232C ports and a protocol macro function		C200HW-COM05-EV1
	RS-422/485 port, an RS-232C port, and a protocol macro function		C200HW-COM06-EV1
PC Card Unit	Two interface slots for PMCIA2 PC cards.		C200HW-PCU01
	Ethernet expansion function included		C200HW-PCS01-EV1
Controller Link Unit	A separate Bus Connection Unit is required.		C200HW-CLK21

Note: Use the V1 Communications Boards for the C200HZ/HG/HE-CPU□□-ZE CPU Units. The C200HW-COM01 can also be used.

Expansion I/O Racks

Name	Specifications		Model number
Power Supply Units	100 to 120/200 to 240 VAC		C200HW-PA204
	100 to 120/200 to 240 VAC (with 24-VDC output terminals)		C200HW-PA204S
	100 to 120/200 to 240 VAC		C200HW-PA204R
	100 to 120/200 to 240 VAC		C200HW-PA209R
	24 VDC		C200HW-PD024
I/O Backplanes	3 slots		C200HW-BI031
	5 slots		C200HW-BI051
	8 slots		C200HW-BI081-V1
	10 slots		C200HW-BI101-V1
I/O Connecting Cables	30 cm	The total length of the I/O Connecting Cables used in a network must be 12 m maximum.	C200H-CN311
	70 cm		C200H-CN711
	2 m		C200H-CN221
	5 m		C200H-CN521
	10 m		C200H-CN131

Slave Racks

Name		Specifications			Model number
Slave Racks	Remote I/O Slave Units	100 to 120/200 to 240 VAC (switchable)		APF/PCF	C200H-RT001-P
		24 VDC			C200H-RT002-P
		100 to 120/200 to 240 VAC (switchable)		Wired	C200H-RT201
		24 VDC			C200H-RT202
I/O Blocks		Input	Specify either 12 or 24 VDC.		G71-IC16
		Output			G71-OD16
I/O Terminals	AC input	Specify either 100 or 200 VAC.			G7TC-IA16
	DC input	Specify either 12 or 24 VDC.			G7TC-ID16
	Output	Specify either 12 or 24 VDC.			G7TC-OC16

I/O Units

Name		Specifications		Model number
Input Units 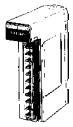	AC Input Units	8 pts	100 to 120 VAC	C200H-IA121
		16 pts	100 to 120 VAC	C200H-IA122/IA122V
		8 pts	200 to 240 VAC	C200H-IA221
		16 pts	200 to 240 VAC	C200H-IA222/IA222V
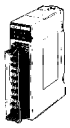	DC Input Units	8 pts	12 to 24 VDC	C200H-ID211
		16 pts	24 VDC	C200H-ID212
	AC/DC Input Units	8 pts	12 to 24 VAC/DC	C200H-IM211
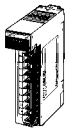		16 pts	24 VAC/DC	C200H-IM212
	Interrupt Input Unit (see note)	8 pts	12 to 24 VDC	C200HS-INT01
Output Units	Relay Output Units	8 pts	2 A, 250 VAC/24 VDC (for resistive loads)	C200H-OC221
		12 pts	2 A, 250 VAC/24 VDC (for resistive loads)	C200H-OC222/OC222N
		5 pts	2 A, 250 VAC/24 VDC (for resistive loads) Independent commons	C200H-OC223
		8 pts	2 A, 250 VAC/24 VDC (for resistive loads) Independent commons	C200H-OC224/OC224N
		16 pts	2 A, 250 VAC/24 VDC (for resistive loads) (see note)	C200H-OC225/OC226N
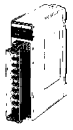	Triac Output Units	8 pts	1 A, 120 VAC	C200H-OA121-E
		8 pts	1 A, 200 VAC	C200H-OA221
		12 pts	0.3 A, 200 VAC	C200H-OA222V
		8 pts	1.2 A, 250 VAC	C200H-OA223
		12 pts	0.5 A, 250 VAC	C200H-OA224
	Transistor Output Units	8 pts	1 A, 12 to 48 VDC	C200H-OD411
		12 pts	0.3 A, 24 VDC	C200H-OD211
		16 pts	0.3 A, 24 VDC (see note)	C200H-OD212
		8 pts	2.1 A, 24 VDC	C200H-OD213
		8 pts	0.8 A, 24 VDC; source type (PNP); w/load short protection	C200H-OD214
		8 pts	0.3 A, 5 to 24 VDC; source type (PNP)	C200H-OD216
		12 pts	0.3 A, 5 to 24 VDC; source type (PNP)	C200H-OD217
		16 pts	1.0 A, 24 VDC; source type (PNP); with load short protection	C200H-OD21A
Analog Timer Unit		4 timers	0.1 to 1 s/1 to 10 s/10 to 60 s/1 min to 10 min (switchable)	C200H-TM001
	Variable Resistor Connector	Connector w/lead wire (2 m) for 1 external resistor		C4K-CN223

Name	Specifications		Model number
B7A Interface Units	15 or 16 input pts	Connects to B7A Link Terminals. Standard transmission delay.	C200H-B7AI1
	16 output pts	Connects to B7A Link Terminals. Standard transmission delay.	C200H-B7AO1 (see note)

Note 1. If the Interrupt Input Unit is mounted on an Expansion I/O Rack, the interrupt function cannot be used and the Interrupt Input Unit will be treated as an ordinary 8-point Input Unit. Moreover, Interrupt Input Units cannot be used on Slave Racks. In addition, Interrupt Input Units require that a version 2 (i.e., model numbers with a "-V2" suffix) Backplane be used at the CPU Rack. If an earlier version Backplane is mounted, the interrupt function cannot be used. When mounting the C200H-OC225, C200H-OD212, or C200H-B7AO1 to a Backplane, make sure that the model number of the Backplane includes the suffix "-V1" or "-V□." The C200H-OC225, C200H-OD212, or C200H-B7AO1 cannot be mounted to any Backplane the model number of which does not include the suffix "-V1" or "-V□."

2. The C200H-OC225 can overheat if more than 8 outputs are turned ON simultaneously.

Group-2 I/O Units

Name		Specifications		Model number
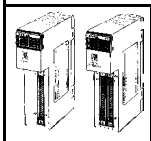	DC Input Units	64 pts	12 VDC	C200H-ID111
		32 pts	24 VDC	C200H-ID216
		64 pts		C200H-ID217
		32 pts		C200H-ID218
		64 pts		C200H-ID219
	Transistor Output Units	32 pts	16 mA at 4.5 V to 100 mA at 26.4 V	C200H-OD218
		32 pts		C200H-OD219
		32 pts	0.5 A (5 A/Unit) at 24 VDC	C200H-OD21B
B7A Interface Units		32 input pts	Connects to B7A Link Terminals. Standard or high-speed transmission delay.	C200H-B7A12
		32 output pts		C200H-B7A02
		16 input and 16 output points		C200H-B7A21
		32 input and 32 output points		C200H-B7A22

Special I/O Units

Name		Specifications		Model number
High-density I/O Units (see note 1)	DC Input Units	32 pts	5 VDC (TTL inputs); w/high-speed input	C200H-ID501
		32 pts	24 VDC; w/high-speed input	C200H-ID215
	Transistor Output Units	32 pts	0.1 A, 24 VDC (useable as 128-point dynamic output unit)	C200H-OD215
		32 pts	35 mA, 5 VDC (TTL outputs) (useable as 128-point dynamic output unit)	C200H-OD501
	DC Input/Transistor Output Units	16 input and 16 output pts	24-VDC inputs; w/high-speed input; 0.1-A, 24-VDC outputs (useable as 128-point dynamic input unit)	C200H-MD215
		16 input and 16 output pts	5-VDC TTL inputs; w/high speed input; 35-mA, 5-VDC TTL outputs (useable as 128-point dynamic input unit)	C200H-MD501
		16 input and 16 output pts	12-VDC TTL inputs; w/high speed input; 12-VDC TTL outputs (useable as 128-point dynamic input unit)	C200H-MD115
Analog I/O Units	Analog Input Units	4 to 20 mA, 1 to 5/0 to 10 V (switchable); 4 inputs; 12 bits		C200H-AD001
		4 to 20 mA, 1 to 5/0 to 10/–10 to 10 V (switchable); 8 inputs; 12 bits or BCD		C200H-AD002
		4 to 20 mA, 1 to 5/0 to 10/–10 to 10 V (switchable); 8 inputs; 16 bits		C200H-AD003
	Analog Output Units	4 to 20 mA, 1 to 5/0 to 10 V (switchable); 2 outputs		C200H-DA001
		4 to 20 mA, –10 to 10 V; 4 outputs		C200H-DA002
		1 to 5/0 to 10/–10 to 10 V (switchable); 8 outputs		C200H-DA003
		4 to 20 mA; 8 outputs		C200H-DA004
	Mixed Analog I/O Units	4 to 20 mA, 1 to 5/0 to 10/–10 to 10 V (switchable); 2 inputs; 16 bits 4 to 20 mA, 1 to 5/0 to 10/–10 to 10 V (switchable); 2 outputs		C200H-MAD01
Temperature Sensor Units		Thermocouple	K(CA) or J(IC), switchable; 4 inputs	C200H-TS001
			K(CA) or L(Fe-CuNi) DIN standards; 4 inputs	C200H-TS002
		Pt resistance thermometer	Pt 100 Ω; 4 inputs	C200H-TS101
			Pt 100 Ω; 4 inputs; DIN and 1989 JIS standards	C200H-TS102
Temperature Control Units		Thermocouple	Transistor output	C200H-TC001
			Voltage output	C200H-TC002
			Current output	C200H-TC003
		Pt resistance thermometer	Transistor output	C200H-TC101
			Voltage output	C200H-TC102
			Current output	C200H-TC103
Heat/Cool Temperature Control Units		Thermocouple	Transistor output	C200H-TV001
			Voltage output	C200H-TV002
			Current output	C200H-TV003
		Pt resistance thermometer	Transistor output	C200H-TV101
			Voltage output	C200H-TV102
			Current output	C200H-TV103
Cam Positioner Unit		Detects angles of rotation by means of a resolver and provides ON and OFF outputs at specified angles. A maximum of 48 cam outputs (16 external outputs and 32 internal outputs) maximum are available.		C200H-CP114

Name		Specifications		Model number
Data Setting Console		Used to set and monitor data in Temperature Control Units, Cam Positioner Units, PID Control Units, and Heat/Cool Temperature Control Units.		C200H-DSC01
	Connecting Cables	2 m		C200H-CN225
		4 m		C200H-CN425
PID Control Units		Transistor output; 4 to 20 mA/1 to 5 V/0 to 5V/0 to 10 V inputs (selectable)		C200H-PID01
		Voltage output; 4 to 20 mA/1 to 5 V/0 to 5V/0 to 10 V inputs (selectable)		C200H-PID02
		Current output; 4 to 20 mA/1 to 5 V/0 to 5V/0 to 10 V inputs (selectable)		C200H-PID03
Position Control Units		1 axis	Pulse output; speeds: 1 to 100,000 pps	C200H-NC111
		1 axis	Pulse output; directly connects to servomotor driver; compatible with line driver; speeds: 1 to 250,000 pps	C200H-NC112
		2 axis	Pulse output; speeds: 1 to 250,000 pps, 53 pts per axis	C200H-NC211
		1 axis	Pulse train output; directly connects to servomotor driver	C200H-NC113
		2 axis	Pulse train output; directly connects to servomotor driver	C200H-NC213
		4 axis	Pulse train output; directly connects to servomotor driver	C200H-NC413
Motion Control Unit		G-language programmable 2-axis analog outputs		C200H-MC221
	MC Support Software	IBM PC/AT or compatible		CV500-ZN3AT1-E
	Connecting cable	3.3 m		CQM1-CIF02
	Teaching Box	---		CVM1-PRS71
	Connection cable for Teaching Box	2 m long		CV500-CN224
	Memory Pack (with key sheet) (see note 2)	---		CVM1-MP701
	Terminal Block Conversion Unit	Simplifies wiring for I/O connectors.		XW2B-20J6-6
	Connecting cable for Terminal Block Conversion Unit			XW2Z-100J-F1
High-speed Counter Units		1 axis	Pulse input; counting speed: 50 kcps; 5 VDC/12 VDC/24 VDC	C200H-CT001-V1
		1 axis	Pulse input; counting speed: 75 kcps; RS-422 line driver	C200H-CT002
		2 axes	Pulse input; counting speed: 75 kcps; RS-422 line driver; 7-digit BCD	C200H-CT021
ASCII Unit		24K-byte RAM and 24K-byte EEPROM are built-in.		C200H-ASC02
ID Sensor Units		Local application, electromagnetic coupling		C200H-IDS01-V1
		Remote application; microwave transmissions		C200H-IDS21
	Read/Write Heads	Electromagnetic type		V600-H series
		Microwave type		V620-H series
	Data Carriers	SRAM type for V600-H series.		V600-D□□R□□
		EEPROM type for V600-H series.		V600-D□□P□□

Name		Specifications	Model number
Voice Unit (see note 3)		60 messages max.; message length: 32, 48, or 64 s (switchable)	C200H-OV001
	Connecting Cable	RS-232C	C200H-CN224

Note: 1. When mounting a High-density I/O Unit as a Special I/O Unit to a Slave Rack, the Remote I/O Master must be the C200H-RM001-PV1 or C200H-RM201.

2. The CV-series Programming Console can be used as a Teaching Box by replacing the Memory Pack of the Programming Console.

3. Observe the following points when using the C200H-OV001 Voice Unit:

- The C200H-OV001 Voice Unit cannot be used when an OMRON display device (Programmable Terminal) is connected to the peripheral port or the RS-232C port of a C200HX/HG/HE(-Z) CPU Unit in NT Link mode. Connect the Programmable Terminal to the serial communications port of a C200HW-COM□□ Communications Board.
- When using a C200H-OV001 Voice Unit mounted on the PC, set the baud rate of the CPU Unit's peripheral port or RS-232C port to 9,600 bps or less (regardless of the serial communications mode).

Communication Units

Name		Specifications			Model number
SYSMAC LINK Unit (coaxial cable)		A Bus Connection Unit must be ordered separately.		Data link table: 918 words	C200HW-SLK23
				Data link table: 2,966 words	C200HW-SLK24
	Terminator	One required for each node at ends of System.			C1000H-TER01
	Attachment Stirrup	Provided with SYSMAC LINK Unit.			C200H-TL001
	F Adapter	To connect network			C1000H-CE001
	F Adapter Cover	To connect network			C1000H-COV01
SYSMAC LINK Unit (optical fiber cable)		Connect with H-PCF cable. A Bus Connection Unit must be ordered separately.		Data link table: 918 words	C200HW-SLK13
				Data link table: 2,966 words	C200HW-SLK14
	Power Supply Adapter	Required when supplying backup power		For 1 or 2 Units	C200H-APS03
	Power Cable	Connects Power Supply Adapter and SYSMAC NET Link Unit.		For 1 Unit	C200H-CN111
				For 2 Units	C200H-CN211
SYSMAC LINK Support Board (coaxial cable)		To connect IBM PC/AT or compatible as node in SYSMAC LINK system			3G8F5-SLK21-E
SYSMAC NET Link Unit		A Bus Connection Unit must be ordered separately.			C200HS-SNT32
	Power Supply Adapter	Required when supplying backup power		For 1 Unit	C200H-APS01
				For 2 Units	C200H-APS02
	Power Cable	Connects Power Supply Adapter and SYSMAC NET Link Unit.	Included with C200H-APS01	For 1 Unit	C200H-CN001
			Included with C200H-APS02	For 2 Units	C200H-CN002
Bus Connection Units		Connects SYSMAC LINK Unit or SYSMAC NET Link Unit to C200HW-COM01/COM04-E Communications Board		For 1 Unit	C200HW-CE001
				For 2 Units	C200HW-CE002
Host Link Units		Rack-mounting	C200H, C200HS, C200HE, C200HG, C200HX	APF/PCF	C200H-LK101-PV1
				RS-422	C200H-LK202-V1
				RS-232C	C200H-LK201-V1
PC Link Unit		Single level: 32 Units Multilevel: 16 Units		RS-485	C200H-LK401
DeviceNet Master Unit		---			C200HW-DRM21
CompoBus/S Master Unit		---			C200HW-SRM21

Name	Specifications		Model number
Remote I/O Master Units	Up to two per PC; connectable to up to 5 Slaves per PC total	APF/PCF	C200H-RM001-PV1
		Wired	C200H-RM201
Remote I/O Slave Units	See *Racks* at beginning of product lists.		
Controller Link Unit	Enables data link and message communications. Communications Board and Bus Connection Unit are required separately.		C200HW-CLK21
PC Card Unit	Compatible with the PMCIA2.1 and provided with two PC Card I/F slots. Ethernet extension function added.		C200HW-PCU01 C200HW-PCS01

Other Wired Remote I/O System Products

Name		Specifications		Model number
Remote I/O Interface		Input	Either 12 or 24 VDC	G71-IC16
		Output		G71-OD16
I/O Blocks	AC Input Unit	Either 120 or 240 VAC.		G7TC-IA16
	DC Input Unit	Either 12 or 24 VDC		G7TC-ID16
	Output Unit	Either 12 or 24 VDC		G7TC-OC16

SYSMAC NET/SYSMAC LINK Hardware

Name	Specifications	Model number
SYSMAC NET Network Support Board	For IBM PC/AT or compatible	S3200-NSB11-E
SYSMAC LINK Network Support Board	For IBM PC/AT or compatible, coaxial cable connector	3G8F5-SLK21-E

Link Adapters

Name	Specifications	Model number
Link Adapters	3 RS-422 connectors	3G2A9-AL001
	3 optical connectors (APF/PCF)	3G2A9-AL002-PE
	3 optical connectors (PCF)	3G2A9-AL002-E
	1 connector for RS-232C; 2 for RS-422	3G2A9-AL003
	1 connector each for APF/PCF, RS-422, and RS-232C	3G2A9-AL004-PE
	1 connector each for PCF, RS-422, and RS-232C	3G2A9-AL004-E
	1 connector each for APF/PCF and AGF	3G2A9-AL005-PE
	1 connector each for PCF and AGF	3G2A9-AL005-E
	1 connector for APF/PCF; 2 for AGF	3G2A9-AL006-PE
	1 connector for PCF; 2 for AGF	3G2A9-AL006-E
	O/E converter; 1 connector for RS-485, 1 connector each for APF/PCF	B500-AL007-P
	Used for on-line removal of SYSMAC NET Link Units from the SYSMAC NET Link System, SYSMAC NET Optical Link Adapter 3 connectors for APF/PCF.	B700-AL001

Optical Fiber Products

Optical Fiber Cable for SYSMAC NET and SYSMAC LINK

H-PCF Optical Fiber Cable with Connectors

System	Appearance	Model number
SYSMAC NET SYSMAC LINK	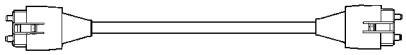	S3200-CN□□□-20-20
	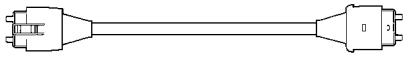	S3200-CN□□□-20-25
	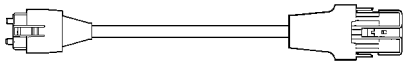	S3200-CN□□□-20-62
	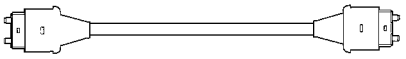	S3200-CN□□□-25-25
		S3200-CN□□□-25-62
	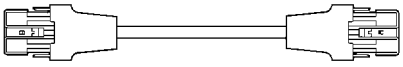	S3200-CN□□□-62-62

Model Numbers

The above cable model numbers specify the type of cable, the length, and the type of connectors attached.

S3200-CN□□□-20-25
1. 2. 3.

1. **S3200-CN** specifies H-PCF optical fiber cable.
2. The boxes (□□□) are replaced by codes indicating the standard model lengths, as shown below.

   Consult with your OMRON representative for longer cables. When ordering longer cables, omit the portion represented by the boxes and specify the length in meters separately, e.g., S3200-CN-20-20, 30 m.

Code	Length	Code	Length
201	2 m	152	15 m
501	5 m	202	20 m
102	10 m	Omitted	Over 20 m

3. The last two portions of the model numbers (e.g., 20-25) specify the connectors, as shown below.

Code	Connector
20	S3200-COCF2011
25	S3200-COCF2511
62	S3200-COCH62M

Applicable Optical Fiber Connectors

Model number/Appearance	Applicable Units	
	SYSMAC NET	SYSMAC LINK
S3200-COCF2011 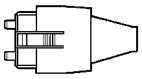	CV500-SNT31	CV500-SLK11 C1000H-SLK11
S3200-COCF2511 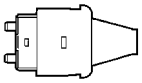	C200HS-SNT32	C200HW-SLK13/14
S3200-COCH62M 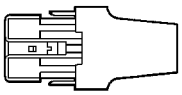	S3200-LSU03-01E S3200-NSUA1-00E S3200-NSUG4-00E S3200-NSB11-E C500-SNT31-V4 B700-AL001	---

All Plastic Optical Fiber Cable for SYSMAC BUS/SYSMAC WAY

Name	Specifications	Model number	Standards
All Plastic Optical Fiber Cable	Cable only; order desired length in 5 m increments between 5 and 100 m, or in increments of 200 m or 500 m.	3G5A2-PF002	---
Optical Connectors A	Two optical connectors (brown) for APF (10 m max.)	3G5A2-CO001	
Optical Connectors B	Two optical connectors (black) for APF (8 to 20 m)	3G5A2-CO002	
All Plastic Optical Fiber Cable Set	1-m cable with an Optical Connector A connected to each end	3G5A2-PF101	
Optical Fiber Processing Kit	Accessory: 125-mm nipper (Muromoto Tekko's 550M) for APF	3G2A9-TL101	

Plastic Clad Optical Fiber Cable for SYSMAC BUS/SYSMAC WAY

Name	Specifications		Model number	Standards
Plastic Clad Optical Fiber Cables (indoor)	0.1 m, w/connectors	Ambient temp: –10° to 70°C	3G5A2-OF011	---
	1 m, w/connectors		3G5A2-OF101	
	2 m, w/connectors		3G5A2-OF201	
	3 m, w/connectors		3G5A2-OF301	
	5 m, w/connectors		3G5A2-OF501	
	10 m, w/connectors		3G5A2-OF111	
	20 m, w/connectors		3G5A2-OF211	
	30 m, w/connectors		3G5A2-OF311	
	40 m, w/connectors		3G5A2-OF411	
	50 m, w/connectors		3G5A2-OF511	
	Cable only; order desired length between 1 and 500 m in increments of 1 m.		3G5A2-OF002	
	Cable only; order desired length between 501 and 800 m in increments of 1 m.	Ambient temp: 0° to 55°C (do not expose to direct sunlight)		

H-PCF Optical Fiber Cables (For SYSMAC NET, SYSMAC LINK, and SYSMAC BUS)

Name	Specifications		Model number	Standards
Optical Fiber Cables SYSMAC NET, SYSMAC LINK	10 m, black	Composite cable including two-core cable and two-core power supply cable	S3200-HCLB101	---
	50 m, black		S3200-HCLB501	
	100 m, black		S3200-HCLB102	
	500 m, black		S3200-HCLB502	
	1,000 m, black		S3200-HCLB103	
	10 m, orange		S3200-HCLO101	
	50 m, orange		S3200-HCLO501	
	100 m, orange		S3200-HCLO102	
	500 m, orange		S3200-HCLO502	
	1,000 m, orange		S3200-HCLO103	
Optical Fiber Cables SYSMAC NET, SYSMAC LINK, SYSMAC BUS, SYSMAC WAY	10 m, black	Two-core cable	S3200-HCLB101	---
	50 m, black		S3200-HCCB501	
	100 m, black		S3200-HCCB102	
	500 m, black		S3200-HCCB502	
	1000 m, black		S3200-HCCB103	
	10 m, orange		S3200-HCCO101	
	50 m, orange		S3200-HCCO501	
	100 m, orange		S3200-HCCO102	
	500 m, orange		S3200-HCCO502	
	1,000 m, orange		S3200-HCCO103	
	10 m, black	Two-core cord	S3200-HBCB101	---
	50 m, black		S3200-HBCB501	
	100 m, black		S3200-HBCB102	
	500 m, black		S3200-HBCB502	
	1,000 m, black		S3200-HBCB103	
Optical Fiber Cable Connector 	SYSMAC NET: S3200-LSU03-01E B700-AL001 C500-SNT31-V4	Full-lock connector for NSU, NSB,, and C500 SYSMAC NET Link Unit	S3200-COCH62M	---
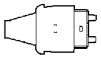	SYSMAC BUS: C200H-RM001-PV1 C200H-RT001/RT002-P C500-RM001-(P)V1 C500-RT001/RT002-(P)V1 3G2A9-□□□(-P)	Half-lock connector for Remote I/O Master, Remote I/O Slave, Host Link Unit, and Link Adapter	S3200-COCH82	
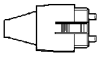	SYSMAC NET/SYSMAC LINK C200HS-SNT32 C200HW-SLK13/14	Half-lock connector	S3200-COCF2511	
	SYSMAC NET/SYSMAC LINK CV500-SNT31 CV500-SLK11 CV1000H-SLK11	Full-lock connector	S3200-COCF2011	
	To relay at all SYSMAC NET nodes.	COCF62M and COCF62F are used as a pair.	S3200-COCF62M	
			S3200-COCF62F	

Note: 1. Optical fiber cables must be prepared and connected by specialists.

2. If the user prepares and connects optical fiber cables, the user must take a seminar held under the auspices of Sumitomo Electric Industries, Ltd. and obtain a proper certificate.
3. The Optical Power Tester, Head Unit, Master Fiber Set, and Optical Fiber Assembling Tool are required to connect optical fiber cables.
4. You may want to use the Plastic Clad Optical Fiber Cable/All Plastic Optical Fiber Cable with connectors listed on the previous two pages.

Optical Fiber Assembling Tool

Name	Specifications	Model number	Standards
Optical Fiber Assembling Tool	Used to connect H-PCF and crimp-cut connectors for optical transmission systems such as the SYSMAC C- and CV-series SYSMAC BUS, SYSMAC LINK and SYSMAC NET.	S3200-CAK1062	---

Note: 1. Optical fiber cables must be prepared and connected by specialists.
2. The Optical Power Tester, Head Unit, Master Fiber set, and Optical Fiber Assembling Tool are required to connect optical fiber cables.

Optical Power Tester

Name	Specifications	Head Unit	Model number	Standards
Optical Power Tester (see note) (provided with a connector adapter, light source unit, small single-head plug, hard case, and AC adapter)	SYSMAC NET: CV500-SNT31 C200HS-SNT32	S3200-CAT2002 (provided with the Tester)	S3200-CAT2000	---
	SYSMAC LINK: CV500-SLK11 C200HW-SLK13/14 CV1000H-SLK11	S3200-CAT2702 (provided with the Tester)	S3200-CAT2700	
	SYSMAC BUS: C200H-RM001-PV1 C200H-RT001/RT002-P C500-RM001-(P)V1 C500-RT001/RT002-(P)V1	S3200-CAT2822 (provided with the Tester)	S3200-CAT2820	
	SYSMAC NET: S3200-LSU03-01E C500-SNT31-V4	S3200-CAT3202 (provided with the Tester)	S3200-CAT3200	

Note: There is no difference between the light source unit and connector adapter for the Head Unit and those for the Optical Power Tester.

Head Unit

Name	Specifications	Model number	Standards
Head Units (a set consisting of light source unit and connector adapter) (see note)	SYSMAC NET: CV500-SNT31 C200HS-SNT32	S3200-CAT2002	---
	SYSMAC LINK: CV500-SLK11 C200HW-SLK13/14 CV1000H-SLK11	S3200-CAT2702	
	SYSMAC BUS: C500-RM001-(P)V1 C500-RT001/RT002-(P)V1 C200H-RM001-PV1 C200H-RT001/RT002-PV1	S3200-CAT2822	
	SYSMAC NET: S3200-LSU03-01E C500-SNT31-V4	S3200-CAT3202	

Note: Use a proper Head Unit model for the optical module to be used. If two types of optical modules (unit type and board type) are used, order an Optical Power Tester plus a proper Head Unit model.

Master Fiber Set

Name	Specifications	Model number	Standards
Master Fiber Sets (1 m)	S3200-CAT3202 (SYSMAC NET, NSB, NSU, Bridge)	S3200-CAT3201	---
	S3200-CAT2002/CAT2702 (SYSMAC NET, SYSMAC LINK)	S3200-CAT2001H	
	S3200-CAT2822 (SYSMAC BUS)	S3200-CAT2821	

Note: 1. The Master Fiber Set is used in combination with the Optical Power Tester to check the optical levels of optical fiber cables connected to optical fiber cable connectors.
2. Optical fiber cables must be prepared and connected by specialists.
3. The Optical Power Tester, Head Unit, Master Fiber set, and Optical Fiber Assembling Tool are required to connect optical fiber cables.

Programming Devices

Name	Specifications		Model number	Standards
Programming Consoles 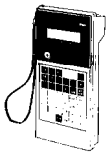	Hand-Held, w/backlight		C200H-PR027-E	U, C
	2-m Connecting Cable included		CQM1-PRO01-E	U, C
Programming Console Mounting Bracket	Used to attach Hand-held Programming Console to a panel.		C200H-ATT01	---
Programming Console Connecting Cables 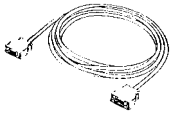	For Hand-held Programming Console	2 m	C200H-CN222	---
		4 m	C200H-CN422	---
Data Setting Console	Used for data input and process value display for the C200H-TC□□□, C200H-TV□□□, C200H-CP114, and C200H-PID0□.		C200H-DSC01	
Data Setting Console Connecting Cables	For C200H-DSC01	2 m	C200H-CN225	
		4 m	C200H-CN425	
Connecting Cable 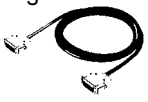	Used to connect an IBM PC/AT or compatible to the C200HX/HG/HE.	3.3 m	CQM1-CIF02	---

Optional Products

Name	Specifications	Model number	Standards
I/O Unit Cover	Cover for 10-pin terminal block	C200H-COV11	---
Terminal Block Covers	Short protection for 10-pin terminal block (package of 10 covers); 8 pts	C200H-COV02	
	Short protection for 19-pin terminal block (package of 10 covers); 12 pts	C200H-COV03	
Connector Cover	Protective cover for unused I/O Connecting Cable connectors	C500-COV01	
Space Unit	Used for vacant slots	C200H-SP001	N, L
Battery Set	For C200H or C200HS RAM Memory Unit only	C200H-BAT09	---
Relay	24 VDC	G6B-1174P-FD-US	---
Backplane Insulation Plates	For C200HW-BC031 (3-slot CPU Backplane)	C200H-ATT31	---
	For C200HW-BC051 (5-slot CPU Backplane)	C200H-ATT51	
	For C200HW-BC081-V1 (8-slot CPU Backplane)	C200H-ATT81	
	For C200HW-BC101-V1 (10-slot CPU Backplane)	C200H-ATTA1	
	For C200HW-BI031 (3-slot I/O Backplane)	C200HW-ATT32	
	For C200HW-BI051 (5-slot I/O Backplane)	C200HW-ATT52	
	For C200HW-BI081-V1 (8-slot I/O Backplane)	C200HW-ATT82	
	For C200HW-BI101-V1 (10-slot I/O Backplane)	C200HW-ATTA2	
I/O Unit Mounting Brackets	For 3 slots (Used with C200HW-BC031.)	C200HW-ATT33	---
	For 5 slots (Used with C200HW-BC051.)	C200HW-ATT53	
	For 8 slots (Used with C200HW-BC081-V1.)	C200HW-ATT83	
	For 10 slots (Used with C200HW-BC101-V1.)	C200HW-ATTA3	
	For 3 slots (Used with C200HW-BI031.)	C200HW-ATT34	
	For 5 slots (Used with C200HW-BI051.)	C200HW-ATT54	
	For 8 slots (Used with C200HW-BI081-V1.)	C200HW-ATT84	
	For 10 slots (Used with C200HW-BC101-V1.)	C200HW-ATTA4	
	For 3-slot Backplane	C200H-ATT33	N
	For 5-slot Backplane	C200H-ATT53	
	For 8-slot Backplane	C200H-ATT83	
	For 10-slot Backplane	C200H-ATTA3	---
External Connectors	Solder terminal; 40p and a Connector Cover	C500-CE401	---
	Solderless terminal; 40p and a Connector Cover (Crimp-type)	C500-CE402	---
	Pressure welded terminal; 40p	C500-CE403	---
	Solder terminal; 40p and a Connector Cover (Horizontal-type)	C500-CE404	---
	Crimp-style terminal; 40p and a Connector Cover (Horizontaltype)	C500-CE405	---

Mounting Rails and Accessories

Name	Specifications	Model number	Standards
DIN Track Mounting Bracket	1 set (2 included)	C200H-DIN01	---
DIN Tracks	Length: 50 cm; height: 7.3 cm	PFP-50N	
	Length: 1 m; height: 7.3 cm	PFP-100N	
	Length: 1 m; height: 16 mm	PFP-100N2	
End Plate	---	PFP-M	
Spacer	---	PFP-S	

Note: Order DIN Tracks, End Plates, and Spacers in units of 10 each.

SYSMAC-CPT Support Software

Name	Specifications	Model number	Standards
SYSMAC Support Software (for C20, C□□P, C□□K, C120, C□□H, C200H, C200HS, C200HE, C200HG, C200HX, C500, C1000H, C2000H, CQM1, and CVM1)	3.5”, 2HD for IBM PC/AT compatible **Note:** Version 1.0 doesn’t support the additional functions of the C200HX/HG/HE.	C500-ZL3AT1-E	---

Protocol Support Software

Name	Specifications	Model number	Standards
Protocol Support Software	3.5”, 2HD for IBM PC/AT compatible	C200HW-ZW3AT1-E	---

Training Materials

Name	Specifications	Model number	Standards
SYSMAC Training System	Includes text book, cassette tape, and input switch board.	C200H-ETL01-E	---
Fuzzy Training System	Includes a Fuzzy Training System Manual, a Main Unit, a C200H-MR831 Memory Unit, a C200H-PRO27-E Programming Console, a C200H-CN222 Cable for the Programming Console, C500-SU981-E Fuzzy Training Software, an RS-232C Cable, and a carrying belt.	C200H-ETL13-E	---

Appendix B
Specifications

The following figures and tables provide specifications for each Unit of the C200HX/C200HG/C200HE. I/O Units may take on one of two different shapes and are sometimes referred to as A-shape Units or B-shape Units. Group-2 High-density I/O Units take on one of two different shapes and are sometimes referred to as C-shape Units or D-shape Units. Refer to the figures at the end of the I/O Unit specifications for the exact dimensions of these two shapes of I/O Unit.

General Specifications

Item	Specifications						
Power Supply Unit	**C200HW-PA204**	**C200HW-PA204S**	**C200HW-PA204R**	**C200H-PA209R**	**C200HW-PA204C**	**C200HW-PD024**	**C200HW-PD025**
Supply voltage	100 to 240 VAC (wide range), 50/60 Hz	100 to 120 VAC/200 to 240 VAC, 50/60 Hz	100 to 240 VAC (wide range), 50/60 Hz	100 to 120 VAC/200 to 240 VAC, 50/60 Hz	100 to 240 VAC (wide range), 50/60 Hz	24 VDC	24 VDC
Operating voltage range	85 to 264 VAC, 47 to 63 Hz	85 to 132 VAC /170 to 264 VAC, 47 to 63 Hz	85 to 264 VAC, 47 to 63 Hz	85 to 132 VAC /170 to 264 VAC, 47 to 63 Hz	85 to 264 VAC, 47 to 63 Hz	19.2 to 28.8 VDC	19.2 to 28.8 VDC
Power consumption	120 VA max.			180 VA max.	100 VA max.	40 W max.	60 W max.
Inrush current	15 A/8ms max. at 100 to 120 VAC (cold start at room temperature) 30 A/8ms max. at 200 to 240 VAC (cold start at room temperature)	20 A/8ms max. at 100 to 120 VAC (cold start at room temperature) 30 A/8ms max. at 200 to 240 VAC (cold start at room temperature)	15 A/8ms max. at 100 to 120 VAC (cold start at room temperature) 30 A/8ms max. at 200 to 240 VAC (cold start at room temperature)	30 A max. at 100 to 120 VAC 40 A at 200 to 240 VAC	15 A/8ms max. at 100 to 120 VAC (cold start at room temperature) 30 A/8ms max. at 200 to 240 VAC (cold start at room temperature)	30 A max.	30 A max.
Output capacity (see note 9)	5 VDC, 4.6 A (including power supply to the CPU Unit)			5 VDC, 9 A (including power supply to the CPU Unit)	Same as for C200HW-PA204.	5 VDC, 4.6 A (including power supply to the CPU Unit)	5 VDC, 5.3 A (including power supply to the CPU Unit)
	26 VDC, 0.625 A Total: 30 W	26 VDC, 0.625 A 24 VDC, 0.8 A Total: 30 W (see note 1)	26 VDC, 0.625 A Total: 30 W	26 VDC, 1.3 A Total: 45 W	26 VDC, 0.625 A Total: 30 W	26 VDC, 0.625 A Total: 30 W	26 VDC, 1.3 A Total: 40 W
Output terminals	Without	With (see note 2)	Without		Without	Without	Without
RUN output (see note 6)	Without		SPST-NO contact Switching capacity: 2 A at 250 VAC (resistive load), 0.5 A at 250 VAC (inductive load), 2 A at 24 VDC	SPST-NO contact Switching capacity: 2 A at 240 VAC (resistive load), 0.5 A at 120 VAC (inductive load), 2 A at 24 VDC (resistive load), 2 A at 24 VDC (inductive load)	Without	Without	Without
Replacement notification function	Without	Without	Without		With Alarm output (open-collector output) 50 mA max. at 30 VDC max.	Without	Without

Power Supply Unit	C200HW-PA204	C200HW-PA204S	C200HW-PA204R	C200H-PA209R	C200HW-PA204C	C200HW-PD024	C200HW-PD025
Insulation resistance	AC: 20 MΩ min. (at 500 VDC) between external terminals and GR terminal (see note 3)				AC: 20 MΩ min. (at 500 VDC) between all external terminals and GR terminal, and between all output terminals DC: 20 MΩ min. (at 250 VDC) between all alarm output terminals and GR terminal	DC: 20 MΩ min. (at 500 VDC) between external terminals and GR terminal (see note 3)	
Dielectric strength (see note 8)	AC: 2,300 VAC, 50/60 Hz for 1 minute between external terminals and GR terminals with a leakage current of 10 mA max. (see note 3)				AC: 2,300 VAC, 50/60 Hz for 1 minute between all external terminals and GR terminal and between all alarm output terminals with a leakage current of 10 mA max.	DC: 1,000 VAC, 50/60 Hz for 1 minute between external terminals and GR terminals with a leakage current of 10 mA max. (see note 3)	
	DC: 1,000 VAC, 50/60 Hz for 1 minute between external terminals and GR terminals with a leakage current of 10 mA max. (see note 3)				DC: 1,000 VAC, 50/60 Hz for 1 minute between all alarm output terminals and GR terminal with a leakage current of 10 mA max.		
Noise immunity	1,500 Vp-p, pulse width: 100 ns to 1 μs, rise time: 1 ns pulse (by noise simulator)				Same as for C200HW-PA204. (Conforms to IEC61000-4-4, 2 kV power supply line.)	Same as for C200HW-PA204.	
Vibration resistance	JIS C0040 conforming,10 to 57 Hz; 0.075 mm amplitude, 57 to 150 Hz (see note 4); acceleration: 9.8 m/s^2, in X, Y, and Z directions, for 80 minutes each (sweep time 8 min x 10 sweeps = 80 min); (When mounted on DIN track, 2 to 55 Hz, 2.94 m/s^2, in X, Y, and Z directions, for 20 minutes each)						
Shock resistance	JIS C0041 conforming, 147 m/s^2 in X, Y, and Z directions, 3 times each						
Ambient temperature	Operating: 0° to 55°C; storage: –20° to 75°C (without battery)				Same as for C200HW-PA204.(see note 7)	Same as for C200HW-PA204.	
Humidity	10% to 90% (without condensation)				Same as for C200HW-PA204. (see note 7.)	Same as for C200HW-PA204.	
Atmosphere	Must be free of the following: • Corrosive gases • Abrupt temperature changes • Direct sunlight • Dust, salt, or metal filings • Water, oil, or chemicals						
Grounding	Class 3 ground						
Enclosure rating	Mounted in a panel						
Weight	6 kg max.						

Power Supply Unit	C200HW-PA204	C200HW-PA204S	C200HW-PA204R	C200H-PA209R	C200HW-PA204C	C200HW-PD024	C200HW-PD025
Dimensions (CPU Racks) (See note 5.)	2-slot Rack: 198.5 x 130 x 118 (WxHxD) 3-slot Rack: 260 x 130 x 118 (WxHxD) 5-slot Rack: 330 x 130 x 118 (WxHxD) 8-slot Rack: 435 x 130 x 118 (WxHxD) 10-slot Rack: 505 x 130 x 118 (WxHxD) **Note:** If the C200HW-PA209R/PD025 is used, D will be 153 mm in the above dimensions.				Same as for C200HW-PA204. **Note:** If the C200HW-PA204C is used, D will be 111 mm in the dimensions.	Same as for C200HW-PA204.	

Note 1. For C200HW-PA204S, the total also includes the power consumption of the power supply output terminals.

2. The output voltage of the 24-VDC output will vary with the current consumption of the load as shown in the following table. Be sure to check the current consumption and allowable voltage ranges of the devices connected before using these terminals. (The combined power consumption for 5 V, 26 V, and 24 V (24-VDC output on PA204S) must be 30 W or less.)

Load current on 24-VDC output	Less than 0.3 A	0.3 A or higher
Accuracy of 24-VDC output for lot No. 0197 or later	+17% –11%	+10% –11%
Accuracy of 24-VDC output for lot No. 3187 or earlier	+10% –20%	

Lot numbers are as shown in the following diagram.

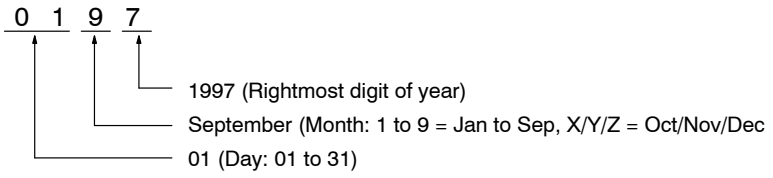

3. Internal components can be damaged if insulation resistance or dielectric strength tests are conducted with the LG and GR terminals connected.

4. Vibration Resistance

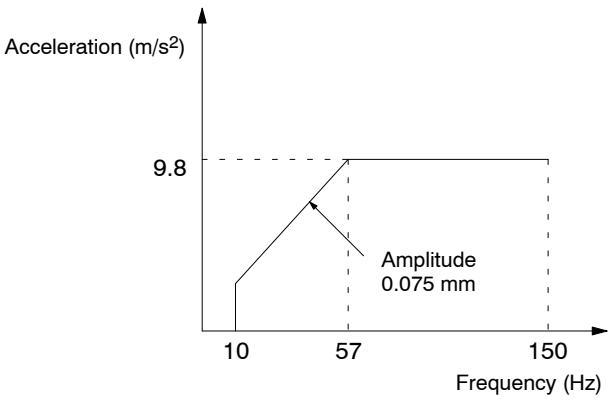

5. Dimensions (Unit: mm)

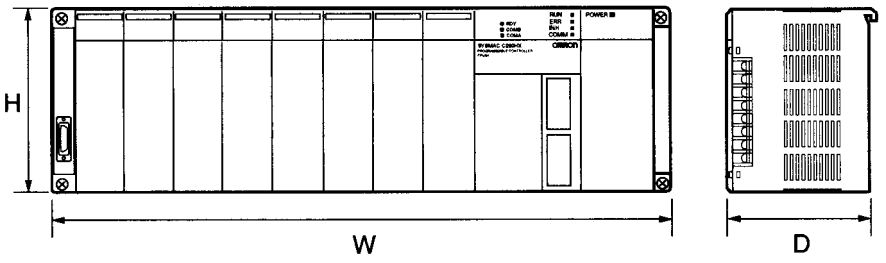

6. RUN output is only available when the Power Supply Unit is mounted on the CPU Backplane.
7. Maintain an ambient storage temperature of –20 to 30°C and relative humidity of 25% to 70% when storing the product for longer than 3 months to keep the replacement notification function in optimum working condition.
8. Change the applied voltage gradually using the adjuster on the Tester. If dielectric strength voltage is suddenly applied or turned OFF using the switch on the Tester, the generated impulse voltage may damage the Power Supply Unit.
9. The Power Supply Unit's internal parts may deteriorate or be damaged if the Unit is used outside the power supply output capacity range for a long period of time or if the output is short-circuited.

CPU Unit Specifications

Control Method	Stored program
I/O Control Method	Cyclic scan and immediate processing are both possible.
Programming Method	Ladder diagram
Instruction Length	1 address/instruction, 1 to 4 words/instruction
Number of Instructions	C200HE-CPU□□-E: 14 basic instructions + 231 special instructions C200HE-CPU□□-ZE: 14 basic instructions + 286 special instructions
Execution Time	Basic instructions: C200HE-CPU□□-E/ZE: 0.3 μs min. C200HG-CPU□□-E/ZE: 0.15 μs min. C200HX-CPU□□-E/ZE: 0.1 μs min. Special instructions: C200HE-CPU□□-E/ZE: 1.2 μs min. C200HG-CPU□□-E/ZE: 0.6 μs min. C200HX-CPU□□-E/ZE: 0.4 μs min.
Program Capacity	C200HE-CPU11-E/ZE: 3.2K words max. C200HE-CPU32-E/42-E/ZE: 7.2K words max. C200HG-CPU□□-E/ZE: 15.2K words max. C200HX-CPU□4-E/ZE: 31.2K words max. C200HX-CPU□5-ZE: 36.2K words max.
IR Area: I/O bits	640 bits (00000 through 02915, 30000 through 30915)
IR Area: Work bits	6,528 bits (03000 through 23515, 31000 through 51115)
SR bits	1,016 (23600 through 25507 and 25600 through 29915)
TR bits	8 (TR 0 through 7)
HR bits	1,600 (HR 0000 through 9915)
AR bits	448 (AR 0000 through 2715)
LR bits	1,024 (LR 0000 through 6315)
Timers/Counters	512 (TIM/CNT 000 through 511)
DM words	Read/write: 6,144 (DM 0000 through 6143) Read only: 512 (DM 6144 through 6655) 3,000 words max. (DM 7000 through 9999)
Expansion DM	Read/write C200HE-CPU□□-E/ZE: None C200HG-CPU□□-E/ZE: 6,144 words (EM 0000 to EM 6143) C200HX-CPU□□-E/ZE: 6,144 words × 3 banks (EM 0000 to EM 6143) C200HX-CPU65-ZE: 6,144 words × 8 banks (EM 0000 to EM 6143) C200HX-CPU85-ZE: 6,144 words × 16 banks (EM 0000 to EM 6143)
Power Failure Backup Function	Holds HR, AR, CNT, and DM, EM and clock (RTC) contents.
Memory Backup Time	The battery service life is five years at 25°C. The service life will be shortened if the battery is used at higher temperatures. Replace the battery within one week after the battery alarm indicator starts blinking. When replacing the battery, install the new battery within five minutes after removing the old one.
Self-diagnostic Function	CPU errors (watchdog timer), I/O verification errors, host link errors, memory errors, battery errors, I/O bus errors, remote I/O errors, etc.
Program Check Function	Carries out program checks at the beginning of operation for items such as no END instruction, instruction errors, and so on.

RS-232C Port Specifications

RS-232C Specifications

The specifications for the RS-232C port are given below. Devices that meet these specifications can be connected.

Connector Pin Assignments

Pin assignments for the RS-232C port are given in the following table.

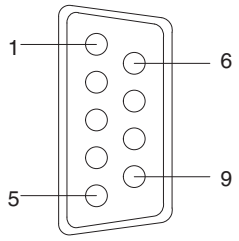

Pin	Abbreviation	Name	Direction
1	FG	Field ground	---
2	SD (TXD)	Send data	Output
3	RD (RXD)	Receive data	Input
4	RS (RTS)	Request to send	Output
5	CS (CTS)	Clear to send	Input
6	---	Not used.	---
7	---	Not used.	---
8	---	Not used.	---
9	SG	Signal ground	---
Connector fitting	FG	Field ground	---

System Configurations

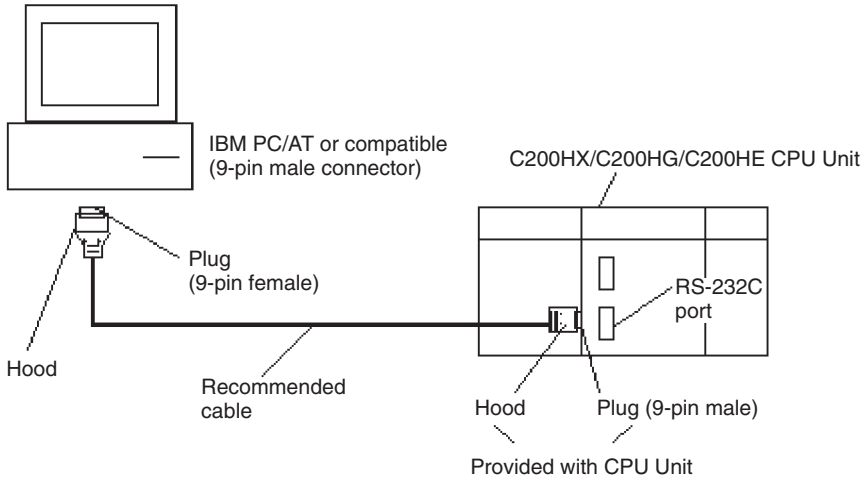

Connections

The connections between the C200HX/C200HG/C200HE and a personal computer are illustrated below as an example.

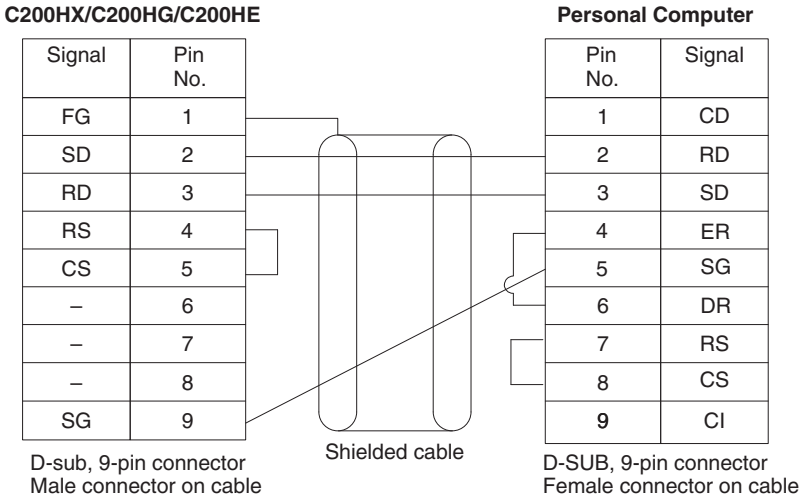

Applicable Connectors

The following connectors are applicable. One plug and one hood are included with the CPU.

CPU Unit Connector

Item	Model	Specifications	
Plug	XM3A-0921 or equivalent	9-pin male	Used together (One of each provided with CPU Unit.)
Hood	XM2S-0911 or equivalent	9-pin, millimeter screws	

Personal Computer Connector

Item	Model	Specifications	
Plug	XM3D-0921 or equivalent	9-pin female	Used together
Hood	XM2S-0913 or equivalent	9-pin, inch screws	

Port Specifications

Item	Specification
Communications method	Half duplex
Sync	Start-stop
Baud rate	1,200, 2,400, 4,800, 9,600, or 19,200 bps
Transmission method	Point to point
Transmission distance	15 m max.
Interface	EIA RS-232C

One-to-one Link Connections

The RS-232C port on the C200HX/C200HG/C200HE can be connected to the same port on another C200HX/C200HG/C200HE. Wire the cable as shown in the diagram below.

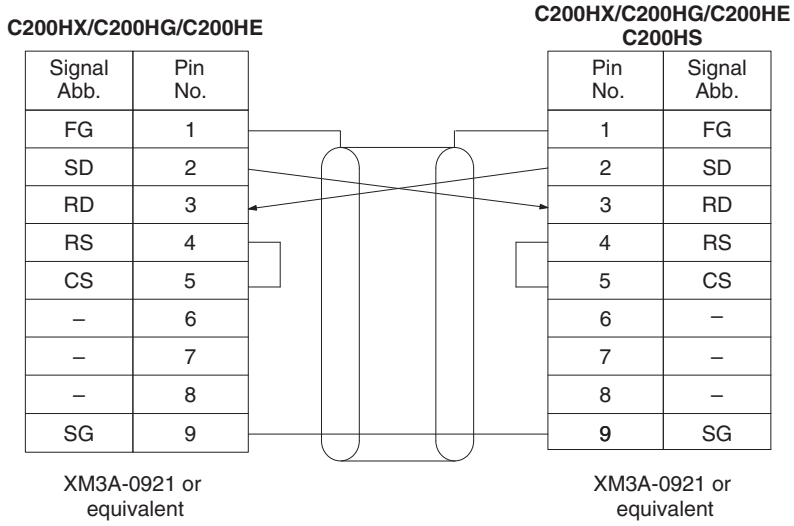

Ground the FG terminals of C200HX/C200HG/C200HE Units at a resistance of less than 100 Ω.

C200H Standard I/O Units

Name		Specifications		Model number	Shape
Input Units	DC Input Units	8 pts	12 to 24 VDC	C200H-ID211	A
		16 pts	24 VDC	C200H-ID212	B
	AC Input Unit	8 pts	100 to 120 VAC	C200H-IA121	A
		16 pts	100 to 120 VAC	C200H-IA122/IA122V	B
		8 pts	200 to 240 VAC	C200H-IA221	A
		16 pts	200 to 240 VAC	C200H-IA222/IA222V	B
	AC/DC Input Unit	8 pts	12 to 24 VAC/DC	C200H-IM211	A
		16 pts	24 VAC/DC	C200H-IM212	B
Output Units	Contact Output Unit	8 pts	2 A, 250 VAC/24 VDC (For resistive loads)	C200H-OC221	A
		12 pts	2 A, 250 VAC/24 VDC (For resistive loads)	C200H-OC222	B
		16 pts	2 A, 250 VAC/24 VAC (For resistive loads)	C200H-OC225	
		5 pts	2 A, 250 VAC/24 VDC (For resistive loads) Independent commons	C200H-OC223	A
		8 pts	2 A, 250 VAC/24 VDC (For resistive loads) Independent commons	C200H-OC224	B
		12 pts	2 A, 250 VAC/24 VDC (For resistive loads)	C200H-OC222N	
		16 pts	2 A, 250 VAC/24 VDC (For resistive loads)	C200H-OC226N	Extended B-shape
		8 pts	2 A, 250 VAC/24 VDC (For resistive loads) Independent commons	C200H-OC224N	B
	Transistor Output Unit	8 pts	1 A, 12 to 48 VDC	C200H-OD411	A
		12 pts	0.3 A, 24 VDC	C200H-OD211	B
		16 pts	0.3 A, 24 VDC	C200H-OD212[2]	
		8 pts	2.1 A, 24 VDC	C200H-OD213	A
		8 pts	0.8 A, 24 VDC; source type (PNP); with load short protection	C200H-OD214	
		8 pts	5 to 24 VDC; source type (PNP)	C200H-OD216	
		12 pts	5 to 24 VDC; source type (PNP)	C200H-OD217	B
		16 pts	1.0 A, 24 VDC; source type (PNP); with load short protection	C200H-OD21A	
	Triac Output Unit	8 pts	1 A, 250 VAC	C200H-OA221	A
		8 pts	1.2 A 250 VAC	C200H-OA223	E
		12 pts	0.3 A, 250 VAC	C200H-OA222V	B
		12 pts	0.5 A, 250 VAC	C200H-OA224	
Interrupt Input Unit[1]		8 pts	12 to 24 VDC	C200HS-INT01	---
Standard B7A Interface Units		16 input pts	Connects to B7A Link Terminals.	C200H-B7AI1	
		16 output pts		C200H-B7AO1	
Analog Timer Unit		4 timers	0.1 to 1 s/1 to 10 s/10 to 60 s/1 min to 10 min (switchable)	C200H-TM001	
	Variable Resistor Connector	Connector w/lead wire (2 m) for 1 external resistor		C4K-CN223	

Note 1. If the Interrupt Input Unit is mounted on an Expansion I/O Rack, the interrupt function cannot be used and the Interrupt Input Unit will be treated as an ordinary 8-point Input Unit. Moreover, Interrupt Input Units cannot be used on Slave Racks. Use a C200HW-BC□□1 Backplane.

2. The Unit can overheat if more than 8 outputs are turned ON simultaneously.

Optional Products

Name	Specifications	Model number
I/O Unit Cover	Terminal cover for 8-point or 5-point I/O Units	C200H-COV11
Connector Cover	Protective cover for unused Backplane connectors	C500-COV01
Space Unit	Used to hold space for an I/O Unit.	C200H-SP001

Note 1. When ordering, specify the model name (any component of which is not sold separately).
2. Order the press-fit tool from the manufacturer.

Standard I/O Units

DC Input Unit C200H-ID211

Rated Input Voltage	12 to 24 VDC
Operating Input Voltage	10.2 to 26.4 VDC
Input Impedance	2 kΩ
Input Current	10 mA (at 24 VDC)
ON Voltage	10.2 VDC min.
OFF Voltage	3.0 VDC max.
ON Response Time	1.5 ms max. (at 12/24 VDC, 25°C)
OFF Response Time	1.5 ms max. (at 12/24 VDC, 25°C)
No. of Circuits	1 (8 point/common)
Internal Current Consumption	10 mA 5 VDC max.
Weight	200 g max.
Dimensions	A-shape

Circuit Configuration

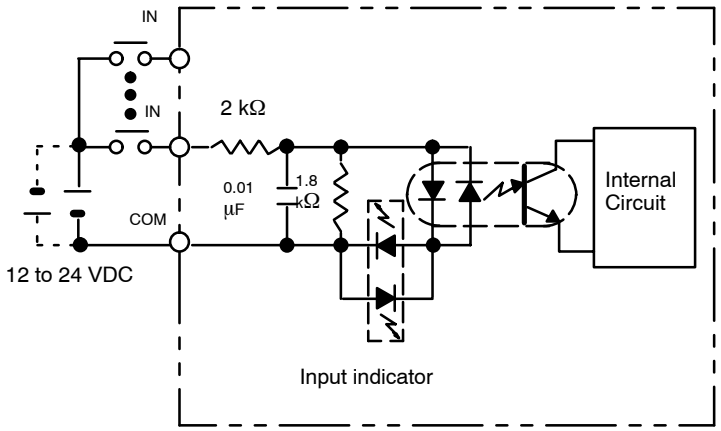

Terminal Connections

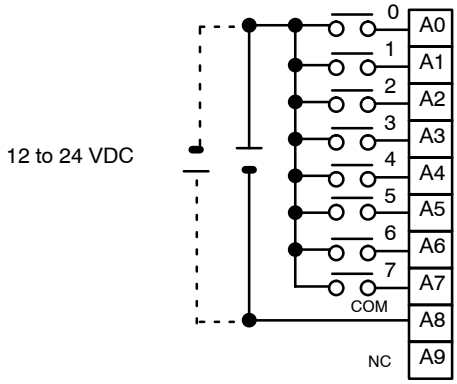

DC Input Unit C200H-ID212

Rated Input Voltage	24 VDC
Operating Input Voltage	20.4 to 26.4 VDC
Input Impedance	3 kΩ
Input Current	7 mA (at 24 VDC)
ON Voltage	14.4 VDC min.
OFF Voltage	5.0 VDC max.
ON Response Time	1.5 ms max. (at 24 VDC, 25°C)
OFF Response Time	1.5 ms max. (at 24 VDC, 25°C)
No. of Circuits	1 (16 points/common)
Internal Current Consumption	10 mA 5 VDC max.
Weight	300 g max.
Dimensions	B-shape

Circuit Configuration

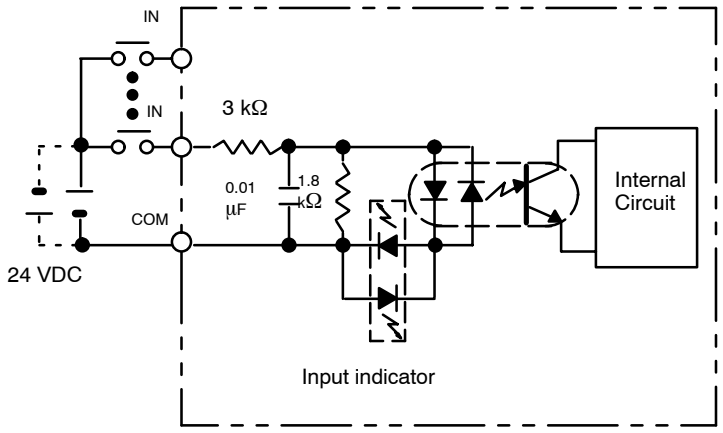

Terminal Connections

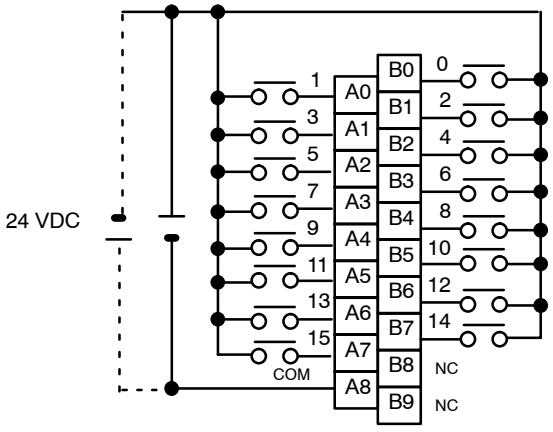

AC Input Unit C200H-IA121

Rated Input Voltage	100 to 120 VAC 50/60 Hz
Operating Input Voltage	85 to 132 VAC 50/60 Hz
Input Impedance	9.7 kΩ (50 Hz), 8 kΩ (60 Hz)
Input Current	10 mA typical (at 100 VAC)
ON Voltage	60 VAC min.
OFF Voltage	20 VAC max.
ON Response Time	35 ms max. (at 100 VAC, 25°C)
OFF Response Time	55 ms max. (at 100 VAC, 25°C)
No. of Circuits	1 (8 points/common)
Internal Current Consumption	10 mA 5 VDC max.
Weight	250 g max.
Dimensions	A-shape

Circuit Configuration

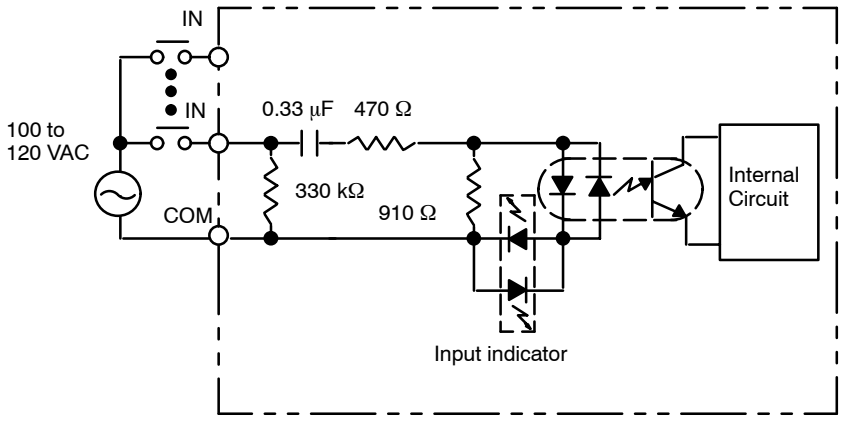

Terminal Connections

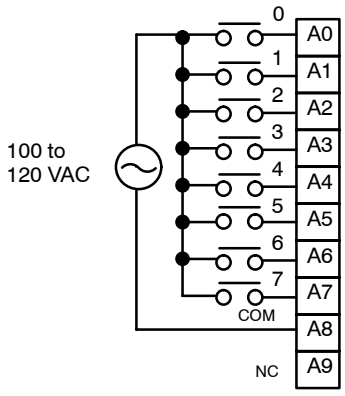

AC Input Unit C200H-IA122/IA122V

Rated Input Voltage	100 to 120 VAC 50/60 Hz
Operating Input Voltage	85 to 132 VAC 50/60 Hz
Input Impedance	9.7 kΩ (50 Hz), 8 kΩ (60 Hz)
Input Current	10 mA typical (at 100 VAC)
ON Voltage	60 VAC min.
OFF Voltage	20 VAC max.
ON Response Time	35 ms max. (at 100 VAC, 25°C)
OFF Response Time	55 ms max. (at 100 VAC, 25°C)
No. of Circuits	1 (16 points/common)
Internal Current Consumption	10 mA 5 VDC max.
Weight	300 g max./400 g max. (IA122V)
Dimensions	B-shape

Circuit Configuration

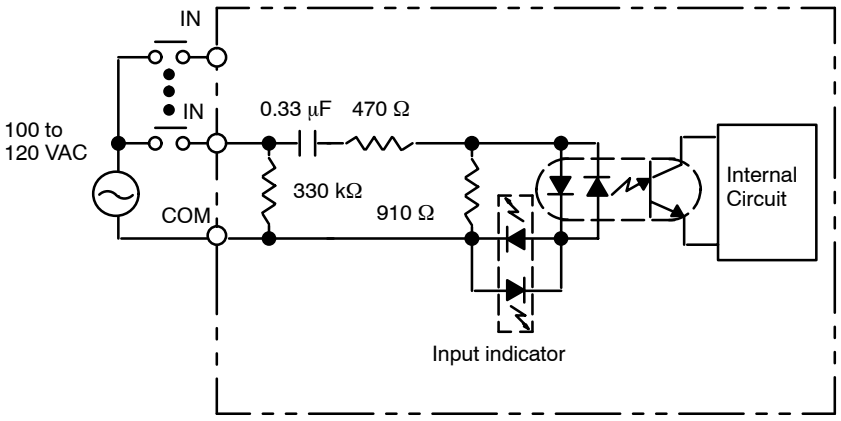

Terminal Connections

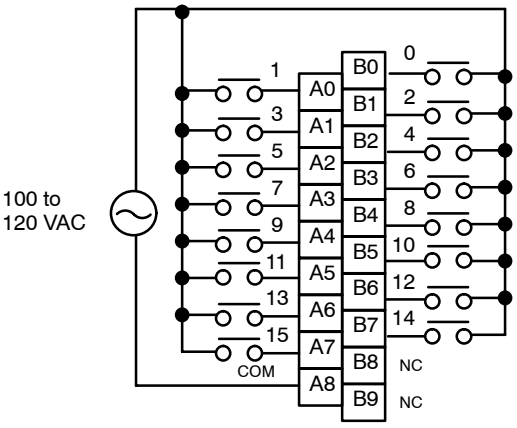

AC Input Unit C200H-IA221

Rated Input Voltage	200 to 240 VAC 50/60 Hz
Operating Input Voltage	170 to 264 VAC 50/60 Hz
Input Impedance	21 kΩ (50 Hz), 18 kΩ (60 Hz)
Input Current	10 mA typical (at 200 VAC)
ON Voltage	120 VAC min.
OFF Voltage	40 VAC max.
ON Response Time	35 ms max. (at 200 VAC, 25°C)
OFF Response Time	55 ms max. (at 200 VAC, 25°C)
No. of Circuits	1 (8 points/common)
Internal Current Consumption	10 mA 5 VDC max.
Weight	250 g max.
Dimensions	A-shape

Circuit Configuration

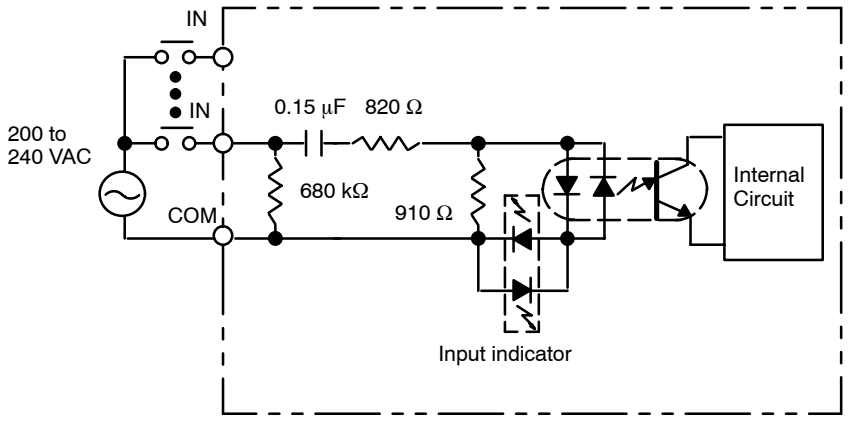

Terminal Connections

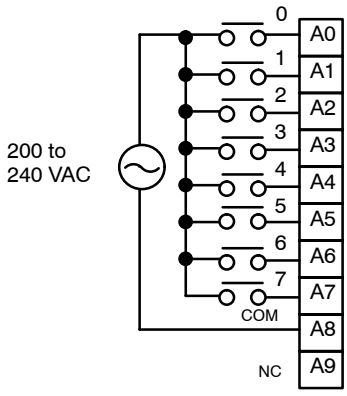

AC Input Unit C200H-IA222/IA222V

Rated Input Voltage	200 to 240 VAC 50/60 Hz
Operating Input Voltage	170 to 264 VAC 50/60 Hz
Input Impedance	21 kΩ (50 Hz), 18 kΩ (60 Hz)
Input Current	10 mA typical (at 200 VAC)
ON Voltage	120 VAC min.
OFF Voltage	40 VAC max.
ON Response Time	35 ms max. (at 200 VAC, 25°C)
OFF Response Time	55 ms max. (at 200 VAC, 25°C)
No. of Circuits	1 (16 points/common)
Internal Current Consumption	10 mA 5 VDC max.
Weight	300 g max./400 g max. (IA222V)
Dimensions	B-shape

Circuit Configuration

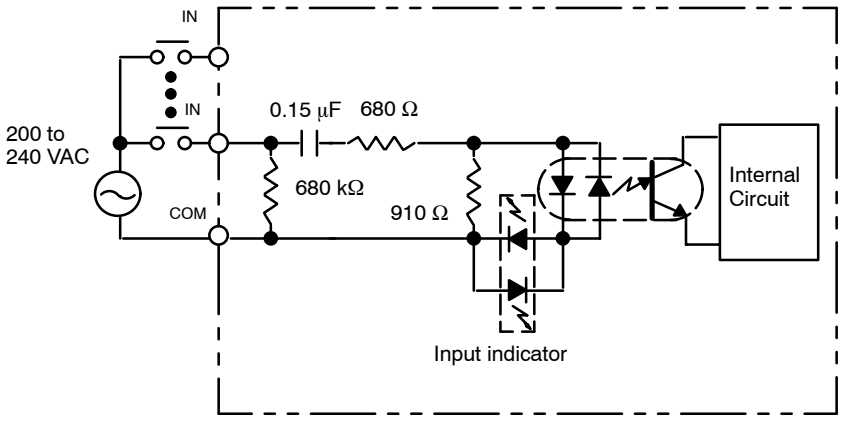

Terminal Connections

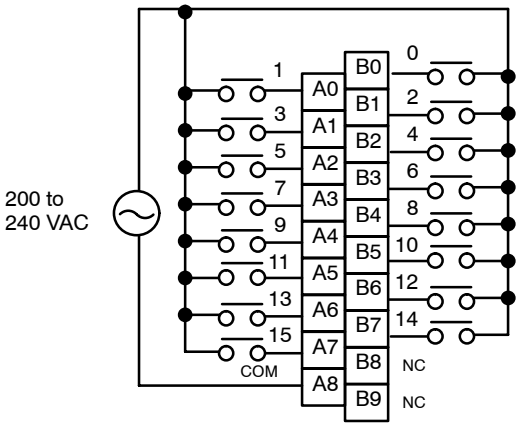

AC/DC Input Unit C200H-IM211

Rated Input Voltage	12 to 24 VDC
Operating Input Voltage	10.2 to 26.4 VDC
Input Impedance	2 kΩ
Input Current	10 mA typical (at 24 VDC)
ON Voltage	10.2 VDC min.
OFF Voltage	3.0 VDC max.
ON Response Time	15 ms max. (at 12/24 VDC, 25°C)
OFF Response Time	15 ms max. (at 12/24 VDC, 25°C)
No. of Circuits	1 (8 points/common)
Internal Current Consumption	10 mA 5 VDC max.
Weight	200 g max.
Dimensions	A-shape

Circuit Configuration

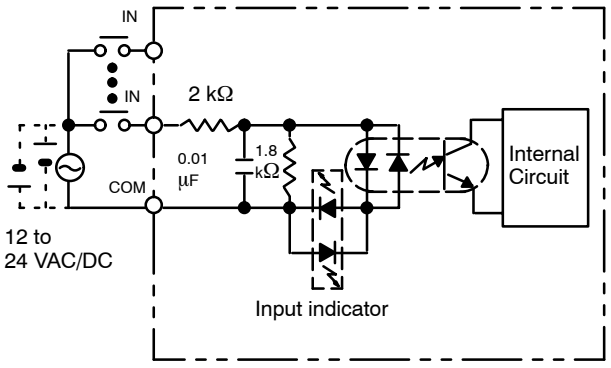

Terminal Connections

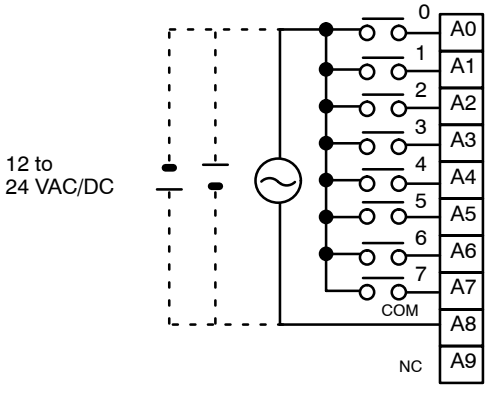

AC/DC Input Unit C200H-IM212

Rated Input Voltage	24 VDC
Operating Input Voltage	20.4 to 26.4 VDC
Input Impedance	3 kΩ
Input Current	7 mA typical (at 24 VDC)
ON Voltage	14.4 VDC min.
OFF Voltage	5.0 VDC max.
ON Response Time	15 ms max. (at 24 VDC, 25°C)
OFF Response Time	15 ms max. (at 24 VDC, 25°C)
No. of Circuits	1 (16 points/common)
Internal Current Consumption	10 mA 5 VDC max.
Weight	250 g max.
Dimensions	B-shape

Circuit Configuration

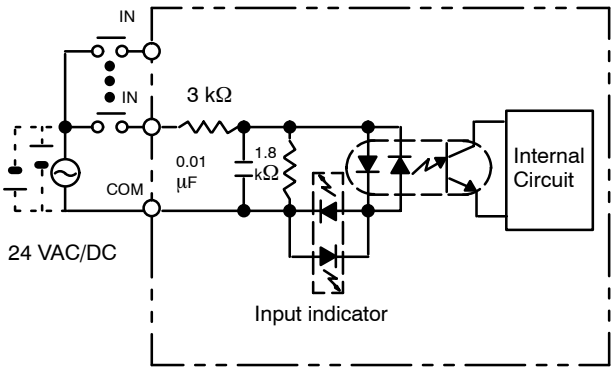

Terminal Connections

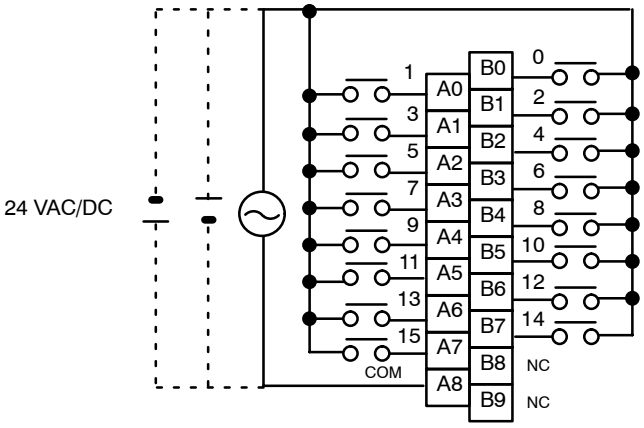

Contact Output Unit C200H-OC221

Max. Switching Capacity	2 A 250 VAC (cosϕ = 1), 2 A 250 VAC (cosϕ = 0.4), 2 A 24 VDC (8 A/Unit)
Min. Switching Capacity	10 mA 5 VDC
Relay	G6B-1174P-FD-US-M (24 VDC) w/socket
Service Life of Relay	Electrical: 500,000 operations (resistive load)/ 100,000 operations (inductive load) Mechanical: 50,000,000 operations
ON Response Time	10 ms max.
OFF Response Time	10 ms max.
No. of Circuits	1 (8 points/common)
Internal Current Consumption	10 mA 5 VDC max. 75 mA 26 VDC (8 points ON simultaneously.)
Weight	250 g max.
Dimensions	A-shape

Circuit Configuration

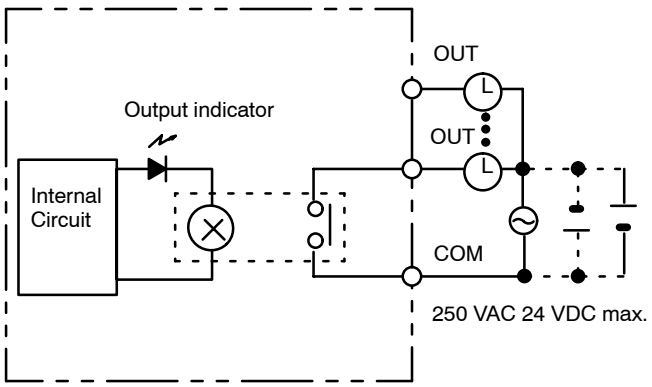

Terminal Connections

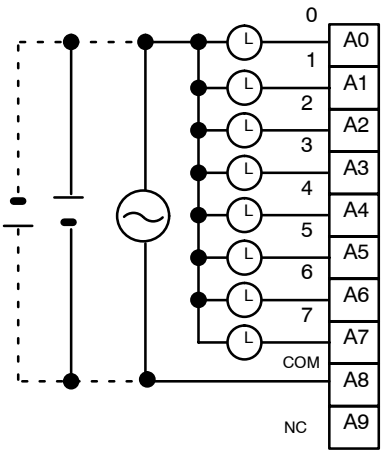

250 VAC 24 VDC max.
(inductive load: 2 A resistive load: 2 A) (8 A/Unit)

Contact Output Unit C200H-OC222

Max. Switching Capacity	2 A 250 VAC (cosϕ = 1), 2 A 250 VAC (cosϕ = 0.4), 2 A 24 VDC (8 A/Unit)
Min. Switching Capacity	10 mA 5 VDC
Relay	G6B-1174P-FD-US-M (24 VDC) w/socket
Service Life of Relay	Electrical: 500,000 operations (resistive load)/ 100,000 operations (inductive load) Mechanical: 50,000,000 operations
ON Response Time	10 ms max.
OFF Response Time	10 ms max.
No. of Circuits	1 (12 points/common) 8 points max. can be ON simultaneously.
Internal Current Consumption	10 mA 5 VDC max. 75 mA 26 VDC (8 points ON simultaneously.)
Weight	300 g max.
Dimensions	B-shape

Circuit Configuration

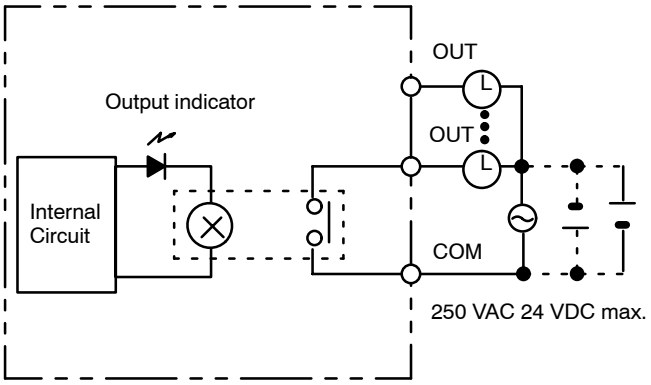

Terminal Connections

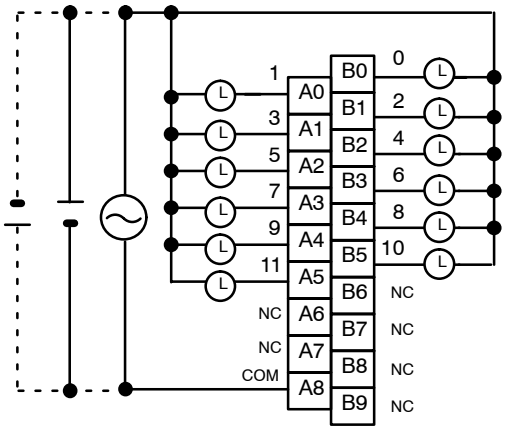

250 VAC 24 VDC max.
(inductive load: 2 A resistive load: 2 A) (8 A/Unit)

Contact Output Unit C200H-OC225

Max. Switching Capacity	2 A 250 VAC (cosϕ = 1), 2 A 250 VAC (cosϕ = 0.4), 2 A 24 VDC (8 A/Unit)
Min. Switching Capacity	10 mA 5 VDC
Relay	G6B-1174P-FD-US-M (24 VDC) w/socket
Service Life of Relay	Electrical: 500,000 operations (resistive load)/ 100,000 operations (inductive load) Mechanical: 50,000,000 operations
ON Response Time	10 ms max.
OFF Response Time	10 ms max.
No. of Circuits	1 (16 points/common) 8 points max. can be ON simultaneously.
Internal Current Consumption	50 mA 5 VDC max. 75 mA 26 VDC (8 points ON simultaneously.)
Weight	400 g max.
Dimensions	B-shape

Circuit Configuration

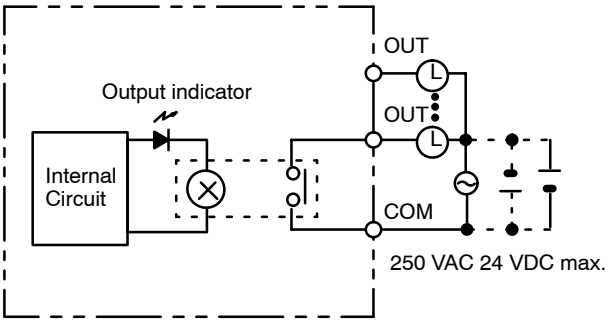

Terminal Connections

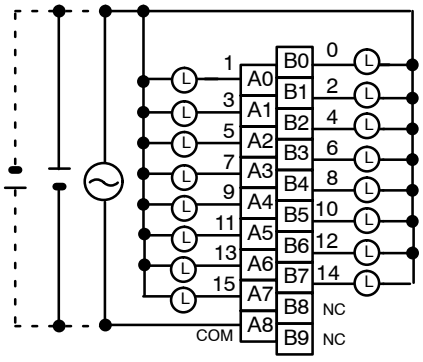

250 VAC 24 VDC max.
(inductive load: 2 A resistive load: 2 A) (8 A/Unit)

Note This Unit can overheat if more than 8 output points are turned ON simultaneously.

Contact Output Unit C200H-OC223

Max. Switching Capacity	2 A 250 VAC (cosϕ = 1), 2 A 250 VAC (cosϕ = 0.4), 2 A 24 VDC (10 A/Unit)
Min. Switching Capacity	10 mA 5 VDC
Relay	G6B-1174-P-FD-US-M (24 VDC) w/socket
Service Life of Relay	Electrical: 500,000 operations (resistive load)/ 100,000 operations (inductive load) Mechanical: 50,000,000 operations
ON Response Time	10 ms max.
OFF Response Time	10 ms max.
No. of Circuits	5 independent contacts
Internal Current Consumption	10 mA 5 VDC max. 75 mA 26 VDC (8 points ON simultaneously.)
Weight	250 g max.
Dimensions	A-shape

Circuit Configuration

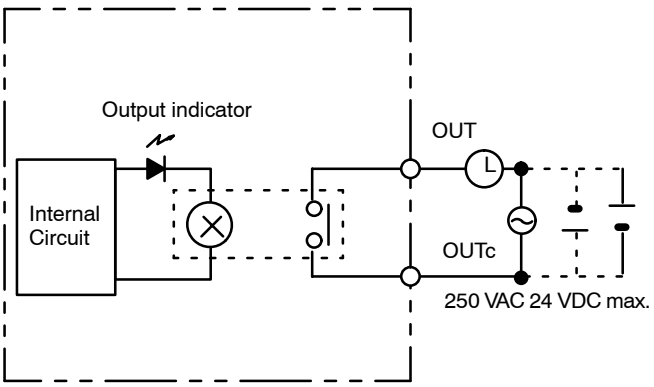

Terminal Connections

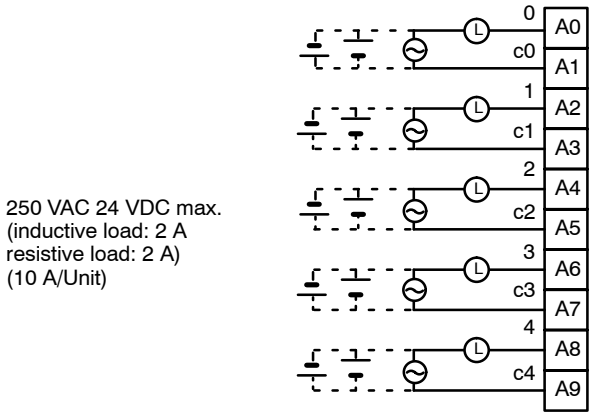

Contact Output Unit C200H-OC224

Max. Switching Capacity	2 A 250 VAC (cosϕ = 1), 2 A 250 VAC (cosϕ = 0.4), 2 A 24 VDC (16 A/Unit)
Min. Switching Capacity	10 mA 5 VDC
Relay	G6B-1174-P-FD-US–M (24 VDC) w/socket
Service Life of Relay	Electrical: 500,000 operations (resistive load)/ 100,000 operations (inductive load) Mechanical: 50,000,000 operations
ON Response Time	10 ms max.
OFF Response Time	10 ms max.
No. of Circuits	8 independent contacts
Internal Current Consumption	10 mA 5 VDC max. 75 mA 26 VDC (8 points ON simultaneously.)
Weight	300 g max.
Dimensions	B-shape

Circuit Configuration

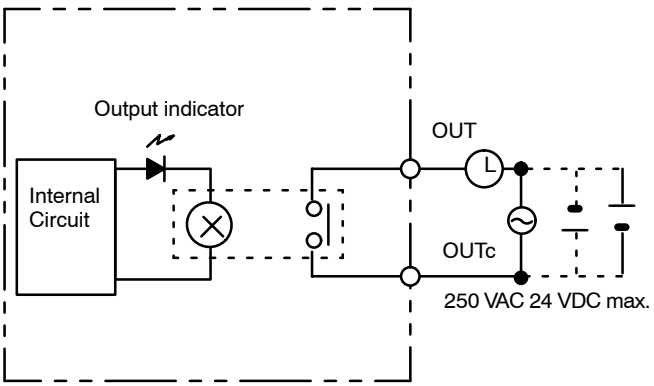

Terminal Connections

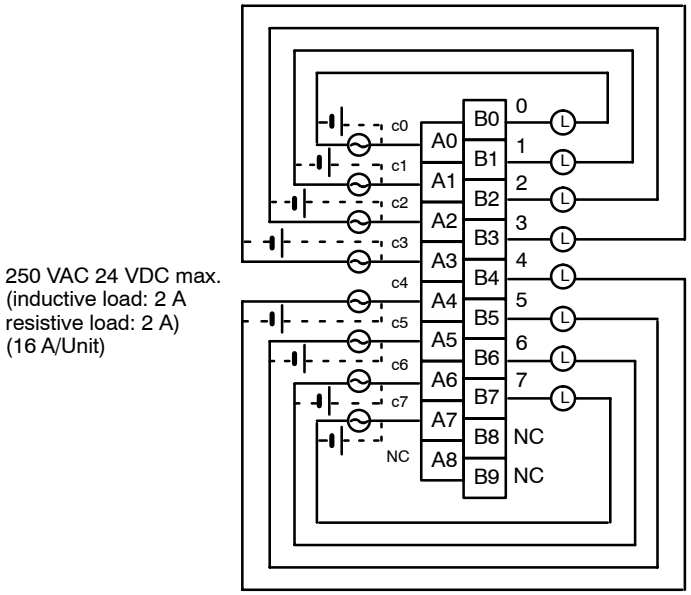

Note There are no restrictions in the polarity when connecting a DC power supply.

Contact Output Unit C200H-OC222V/OC222N

Max. Switching Capacity	2 A 250 VAC (cosϕ = 1), 2 A 250 VAC (cosϕ = 0.4), 2 A 24 VDC (8 A/Unit)
Min. Switching Capacity	10 mA 5 VDC
Relay	OC222V: G6R-1 (24 VDC) w/socket OC222N: G6RN-1-ACD (24 VDC) soldered to board
Service Life of Relay	Electrical: 300,000 operations Mechanical: 10,000,000 operations
ON Response Time	15 ms max.
OFF Response Time	15 ms max.
No. of Circuits	1 (12 points/common) 8 points max. can be ON simultaneously.
Internal Current Consumption	8 mA 5 VDC max. 90 mA 26 VDC (8 points ON simultaneously.)
Weight	400 g max.
Dimensions	B-shape

Circuit Configuration

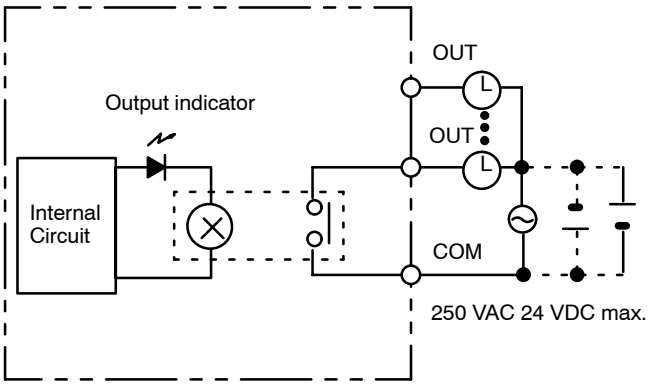

Terminal Connections

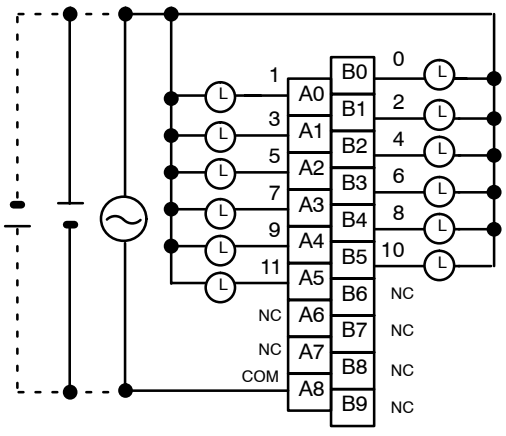

250 VAC 24 VDC max.
(inductive load: 2 A resistive load: 2 A) (8 A/Unit)

Contact Output Unit C200H-OC226/OC226N

Max. Switching Capacity	2 A 250 VAC (cosϕ = 1), 2 A 250 VAC (cosϕ = 0.4), 2 A 24 VDC (8 A/Unit)
Min. Switching Capacity	10 mA 5 VDC
Relay	OC226: G6R-1 (24 VDC) w/socket OC226N: G6RN-1-ACD (24 VDC) soldered to board
Service Life of Relay	Electrical: 300,000 operations Mechanical: 10,000,000 operations
ON Response Time	15 ms max.
OFF Response Time	15 ms max.
No. of Circuits	1 (16 points/common) 8 points max. can be ON simultaneously.
Internal Current Consumption	30 mA 5 VDC max. 90 mA 26 VDC (8 points ON simultaneously.)
Weight	500 g max.
Dimensions	Extended B-shape

Circuit Configuration

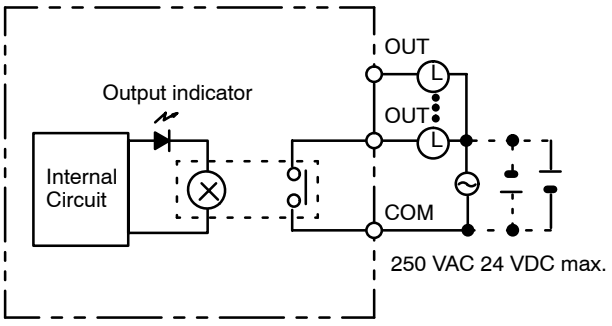

Terminal Connections

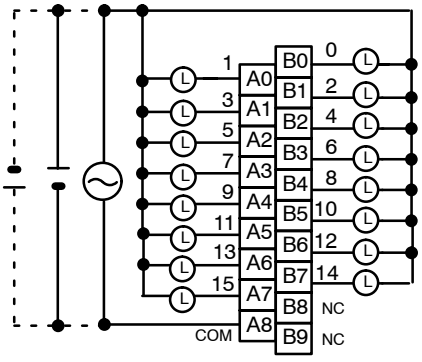

250 VAC 24 VDC max.
(inductive load: 2 A resistive load: 2 A) (8 A/Unit)

Contact Output Unit C200H-OC224V/OC224N

Max. Switching Capacity	2 A 250 VAC (cosϕ = 1), 2 A 250 VAC (cosϕ = 0.4), 2 A 24 VDC (16 A/Unit)
Min. Switching Capacity	10 mA 5 VDC
Relay	OC224V: G6R-1 (24 VDC) w/socket OC224N: G6RN-1-ACD (24 VDC) soldered to board
Service Life of Relay	Electrical: 300,000 operations Mechanical: 10,000,000 operations
ON Response Time	15 ms max.
OFF Response Time	15 ms max.
No. of Circuits	8 independent contacts
Internal Current Consumption	10 mA 5 VDC max. 90 mA 26 VDC (8 points ON simultaneously.)
Weight	350 g max.
Dimensions	B-shape

Circuit Configuration

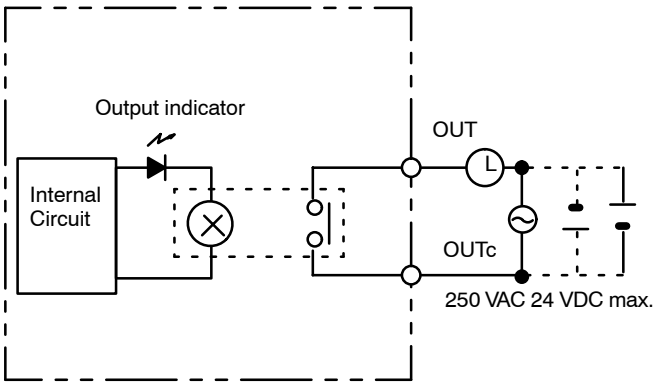

Terminal Connections

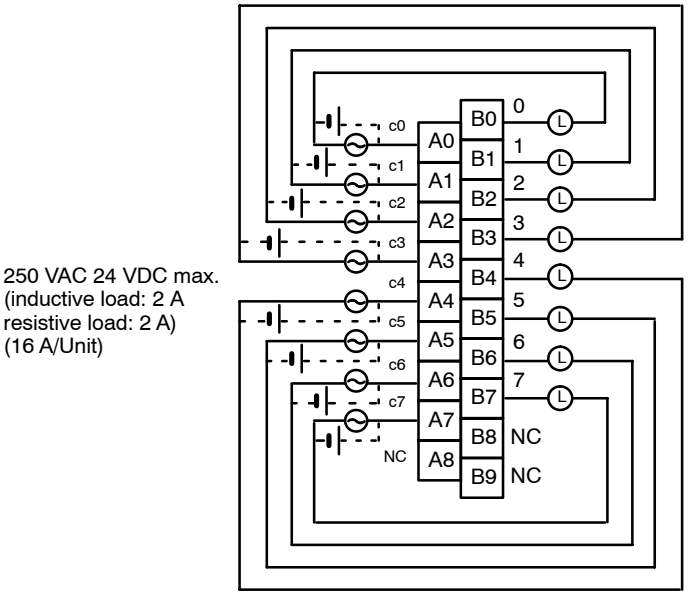

Note There are no restrictions in the polarity when connecting a DC power supply.

Life Expectancy of Contact Output Unit

The C200H-OC221/222/223/224/225 Contact Output Unit uses OMRON's G6B-1174P-FD-US-M Relay. The life of the G6B-1174P-FD-US Relay varies with the contact current and ambient temperature. Refer to the following graphs to calculate this value, and be sure to replace the Relays before their service life expires.

Contact Current vs. Life Expectancy
Conditions
Switching frequency: 1,800 times/hour max.
Ambient temperature: 23°C

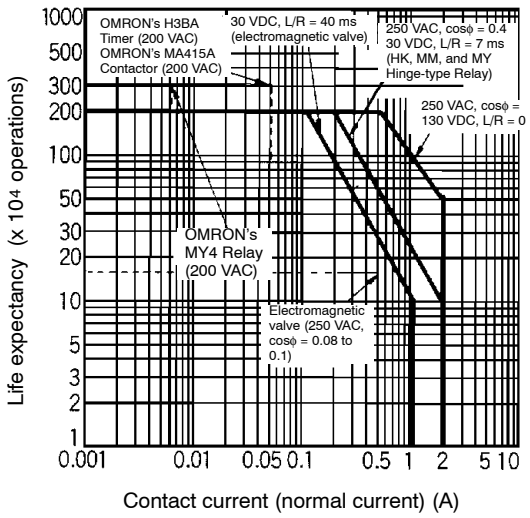

Ambient Temperature vs. Life Expectancy
Conditions
Switching frequency: 1,800 times/hour max.

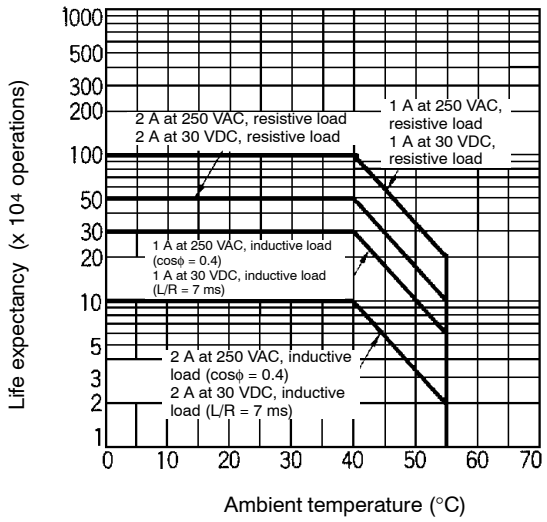

Note 1. If the Contact Output Unit is panel-mounted, the temperature inside the panel represents the ambient temperature.

2. The life of the Relay at an ambient temperature of 55°C is one-fifth the life of the Relay at room temperature (0° to 40°C).

Inductive Load

The life of the Relay varies with the load inductance. If any inductive load is connected to the Contact Output Unit, use an arc killer with the Contact Output Unit using an inductive load.

Be sure to connect a diode in parallel with every DC inductive load that is connected to the Contact Output Unit.

Contact Protection Circuit

Arc killers are used with the Contact Output Unit in order to prolong the life of each Relay mounted to the Contact Output Unit, prevent noise, and reduce the generation of carbide and nitrate deposits. Arc killers can, however, reduce relay life if not use correctly.

Note Arc killers used with the Contact Output Unit can delay the resetting time required by each Relay mounted to the Contact Output Unit.

Arc killer circuit examples are listed in the following table.

Circuit	Current		Characteristic	Required element
	AC	DC		
CR method 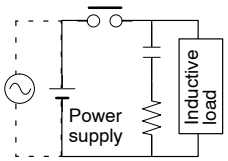	Yes	Yes	If the load is a relay or solenoid, there is a time lag between the moment the circuit is opened and the moment the load is reset. If the supply voltage is 24 or 48 V, insert the arc killer in parallel with the load. If the supply voltage is 100 to 200 V, insert the arc killer between the contacts.	The capacitance of the capacitor must be 1 to 0.5 μF per contact current of 1 A and resistance of the resistor must be 0.5 to 1 Ω per contact voltage of 1 V. These values, however, vary with the load and the characteristics of the relay. Decide these values from experiments, and take into consideration that the capacitance suppresses spark discharge when the contacts are separated and the resistance limits the current that flows into the load when the circuit is closed again. The dielectric strength of the capacitor must be 200 to 300 V. If the circuit is an AC circuit, use a capacitor with no polarity.
Diode method 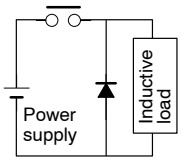	No	Yes	The diode connected in parallel with the load changes energy accumulated by the coil into a current, which then flows into the coil so that the current will be converted into Joule heat by the resistance of the inductive load. This time lag, between the moment the circuit is opened and the moment the load is reset, caused by this method is longer than that caused by the CR method.	The reversed dielectric strength value of the diode must be at least 10 times as large as the circuit voltage value. The forward current of the diode must be the same as or larger than the load current. The reversed dielectric strength value of the diode may be two to three times larger than the supply voltage if the arc killer is applied to electronic circuits with low circuit voltages.
Varistor method 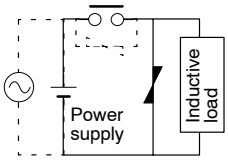	Yes	Yes	The varistor method prevents the imposition of high voltage between the contacts by using the constant voltage characteristic of the varistor. There is time lag between the moment the circuit is opened and the moment the load is reset. If the supply voltage is 24 or 48 V, insert the varistor in parallel with the load. If the supply voltage is 100 to 200 V, insert the varistor between the contacts.	---

Note Do not connect a capacitor as an arc killer in parallel with an inductive load as shown in the following diagram. This arc killer is very effective for preventing spark discharge at the moment when the circuit is opened. However when the contacts are closed, the contacts may be welded due to the current charged in the capacitor.
DC inductive loads can be more difficult to switch than resistive loads. If appropriate arc killers are used, however, DC inductive loads will be as easy to switch as resistive loads.

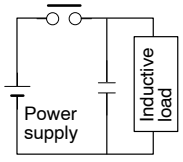

Transistor Output Unit C200H-OD411

Max. Switching Capacity	12 to 48 VDC 1 A (3 A/Unit)
Min. Switching Capacity	None
Leakage Current	0.1 mA max.
Residual Voltage	1.4 V max.
ON Response Time	0.2 ms max.
OFF Response Time	0.3 ms max.
No. of Circuits	1 (8 points/common)
Internal Current Consumption	140 mA 5 VDC max.
Fuse Rating	5 A 125 V (5.2-dia.x20)
Power for External Supply	30 mA 12 to 48 VDC min.
Weight	250 g max.
Dimensions	A-shape

Circuit Configuration

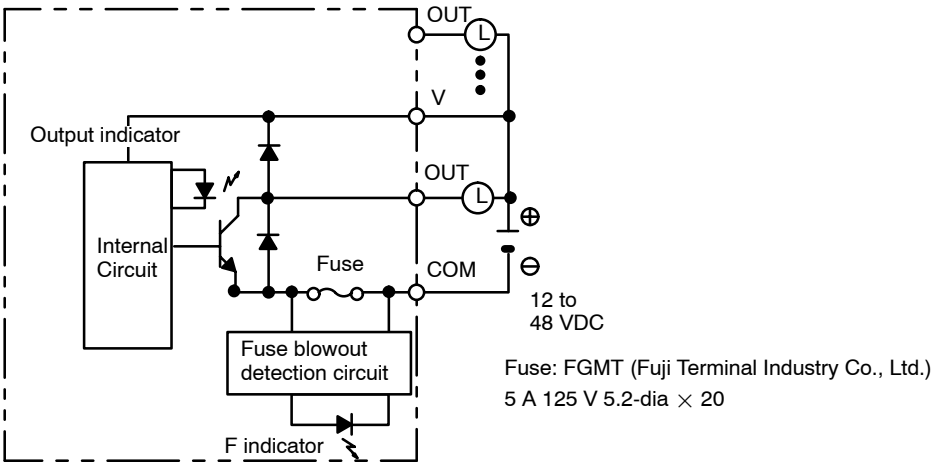

Note When the fuse blows, the F indicator lights and bit 08 turns ON. Bits 08 through 15 cannot be used as IR bits.

Terminal Connections

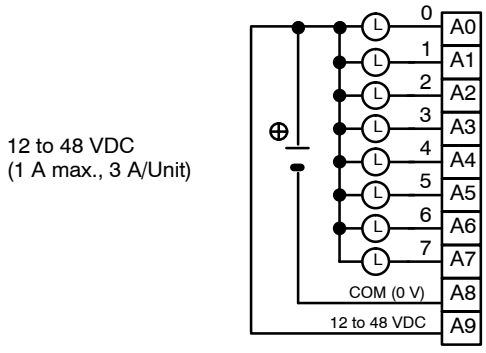

Note Be sure to supply power to A9; otherwise current will leak through the load while the output is OFF.

Transistor Output Unit C200H-OD211

Max. Switching Capacity	0.3 A 24 VDC $^{+10\%}/_{-15\%}$ (2 A/Unit)
Min. Switching Capacity	None
Leakage Current	0.1 mA max.
Residual Voltage	1.4 V max.
ON Response Time	0.2 ms max.
OFF Response Time	0.3 ms max.
No. of Circuits	1 (12 points/common)
Internal Current Consumption	160 mA 5 VDC max.
Fuse Rating	5 A 125 V (5.2-dia.x20)
Power for External Supply	25 mA 24 VDC $^{+10\%}/_{-15\%}$ min.
Weight	300 g max.
Dimensions	B-shape

Circuit Configuration

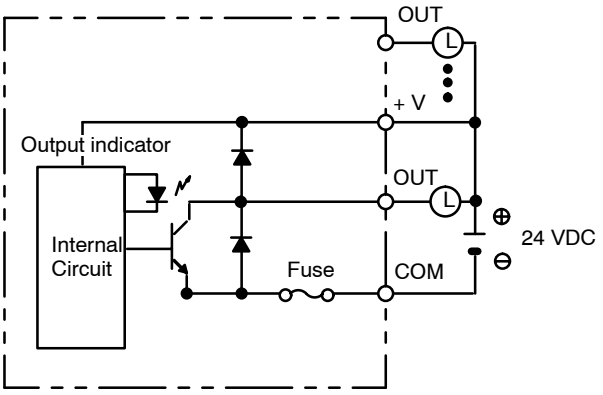

Fuse: FGMT (Fuji Terminal Industry Co., Ltd.)

5 A 125 V 5.2-dia × 20

Note 1. No blown fuse detector circuit is provided.
2. Check the fuse when there is no output.

Terminal Connections

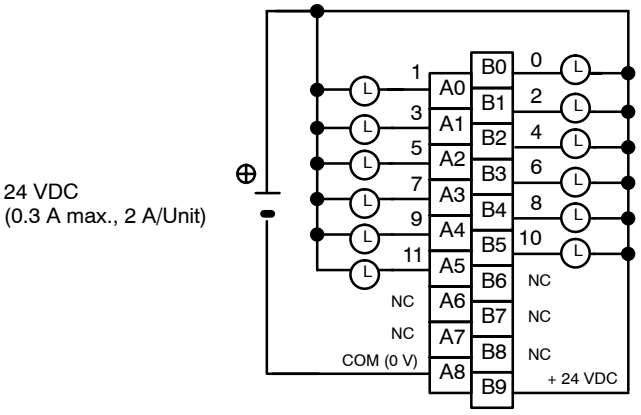

Note Be sure to supply power to B9; otherwise current will leak through the load while the output is OFF.

Transistor Output Unit C200H-OD212

Max. Switching Capacity	0.3 A 24 VDC $^{+10\%}/_{-15\%}$ (4.8 A/Unit)
Min. Switching Capacity	None
Leakage Current	0.1 mA max.
Residual Voltage	1.4 V max.
ON Response Time	0.2 ms max.
OFF Response Time	0.3 ms max.
No. of Circuits	1 (16 points/common)
Internal Current Consumption	180 mA 5 VDC max.
Fuse Rating	8 A 125 V (5.2-dia.x20)
Power for External Supply	35 mA 24 VDC $^{+10\%}/_{-15\%}$ min.
Weight	350 g max.
Dimensions	B-shape

Circuit Configuration

Units manufactured on or before October 9, 2002
(manufacturing numbers 09X2 or earlier)

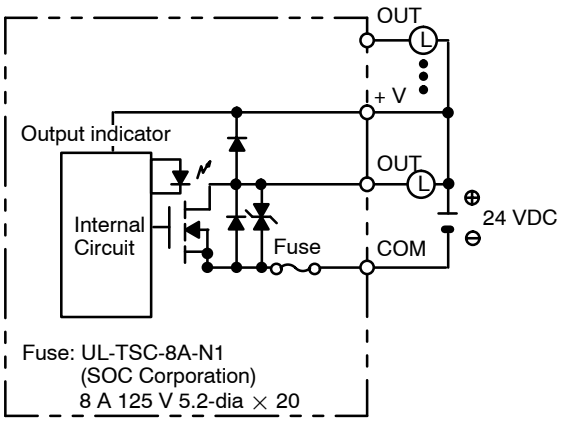

Units manufactured on or after October 10, 2002
(manufacturing numbers 10X2H or later)

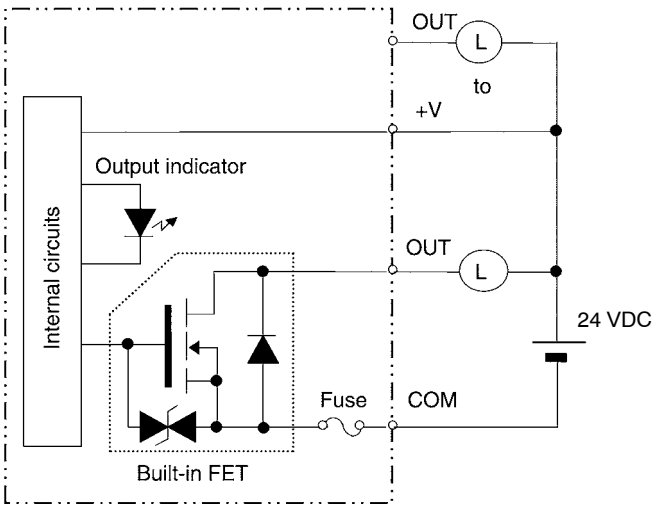

Note 1. No blown fuse detector circuit is provided.
2. Check the fuse when there is no output.

Terminal Connections

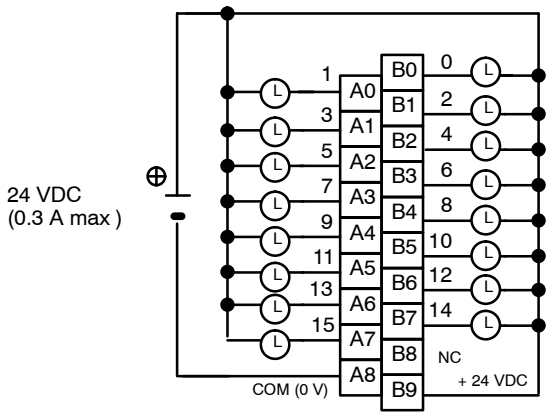

Note Be sure to supply power to B9; otherwise current will leak through the load while the output is OFF.

Transistor Output Unit C200H-OD213

Max. Switching Capacity	2.1 A 24 VDC $^{+10\%}/_{-15\%}$ (5.2 A/Unit) NPN output
Min. Switching Capacity	None
Leakage Current	0.1 mA max.
Residual Voltage	1.4 V max.
ON Response Time	0.2 ms max.
OFF Response Time	0.3 ms max.
No. of Circuits	1 (8 points/common)
Internal Current Consumption	140 mA 5 VDC max.
Fuse Rating	8 A 125 V (5.2-dia.x20)
Power for External Supply	30 mA 24 VDC $^{+10\%}/_{-15\%}$ min.
Weight	250 g max.
Dimensions	A-shape

Circuit Configuration

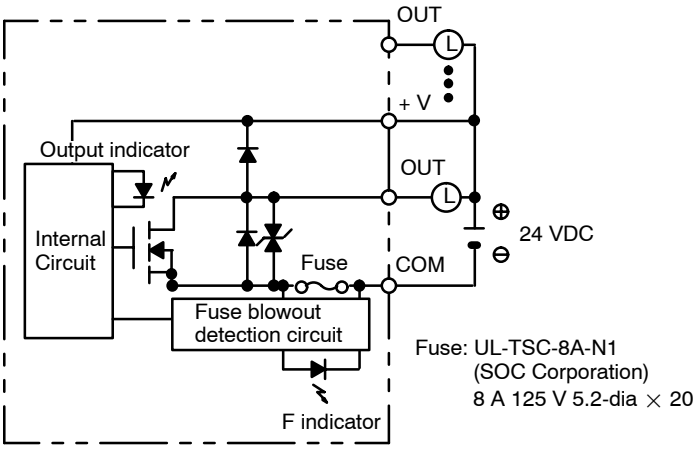

Note When the fuse blows, the F indicator lights and bit 08 turns ON. Bits 08 through 15 cannot be used as IR bits.

Terminal Connections

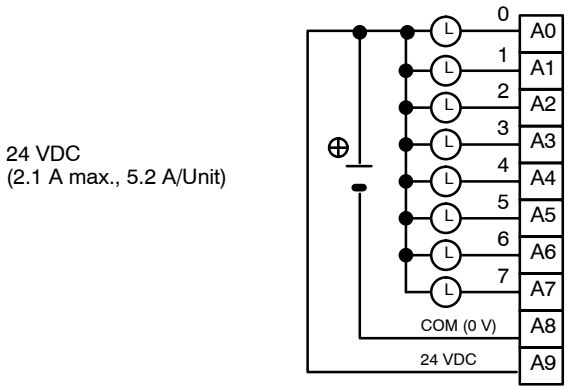

Note Be sure to supply power to A9; otherwise current will leak through the load while the output is OFF.

Transistor Output Unit C200H-OD214 (Load Short-circuit Protection Provided)

Max. Switching Capacity	24 VDC $^{+10\%}/_{-15\%}$ 0.8 A (2.4 A/Unit) surge current 2 A (source type) PNP output	
Min. Switching Capacity	None	
Leakage Current	1 mA max.	
Residual Voltage	1.5 V max.	
ON Response Time	1 ms max.	
OFF Response Time	1 ms max.	
No. of Circuits	1 (8 points/common)	
Internal Current Consumption	140 mA 5 VDC max.	
Fuse Rating	Short-circuit protection	Overcurrent protection
		Thermal protection
Power for External Supply	150 mA 24 VDC $^{+10\%}/_{-15\%}$ min.	
Weight	250 g max.	
Dimensions	A-shape	

Circuit Configuration

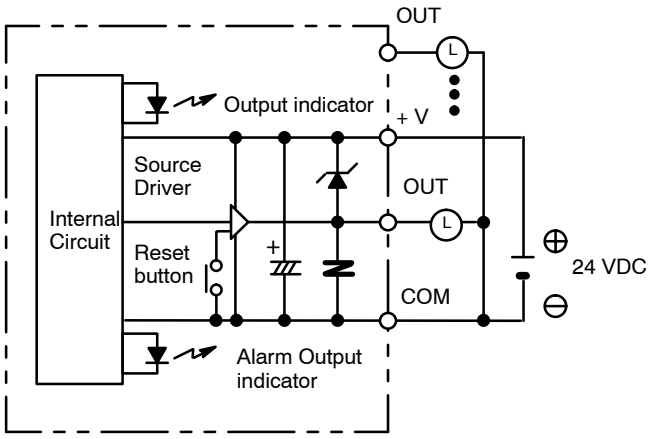

Terminal Connections

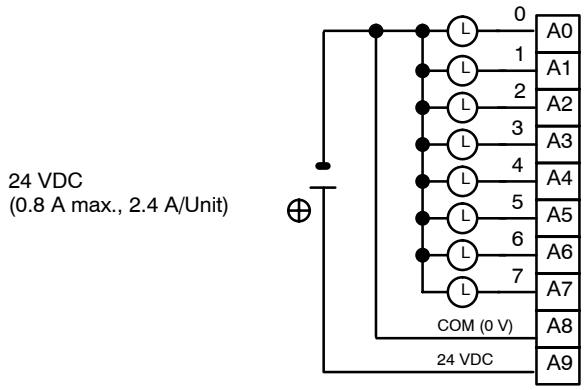

Note Be sure to supply power to A9; otherwise current will leak through the load while the output is OFF.

C200H-OD214 Short-Circuit Protection

The C200H-OD214 Output Unit is equipped with two types of short-circuit protection: overcurrent protection and thermal protection. Any short-circuit must be eliminated immediately in order to avoid damage to the Unit.

Overcurrent Protection

When the output current reaches 2 A, the alarm output turns ON, and the alarm indicator lights. Make sure the surge current of the load does not exceed 2 A, or the alarm may be activated.

Thermal Protection

When the junction temperature of the output transistor reaches its upper limit, the output turns OFF, the alarm output turns ON, and the alarm indicator blinks. But the output transistor is provided with a heat sink. So in some cases, when the output is short-circuited the thermal protection may not activate because the extra heat is dissipated by the heat sink. However, the alarm indicator will still light and the alarm output will still turn ON.

How It Works

When the short-circuit protection activates, the output displays the characteristic shown below.

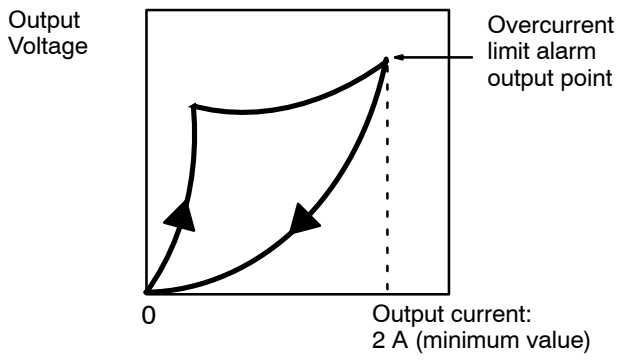

Each pair of outputs share one alarm indicator and one alarm output bit as shown below (bits 12 through 15 cannot be used as IR bits)

Output No.	0	1	2	3	4	5	6	7
Alarm indicator No.	0		2		4		6	
Alarm Output Point No.	08		09		10		11	

Both the alarm indicator and alarm output bit for the short-circuited output turn ON even if only one of the outputs is short-circuited. Both outputs should be disconnected until the short-circuit can be traced.

Clearing the Alarm

When the short-circuit has been eliminated, reset the Unit by pressing the reset button. The alarm indicator will go out, the alarm output will turn OFF, and the output will be reset.

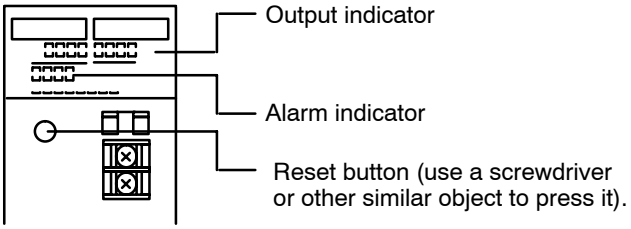

Programming Example

If there is a short-circuit in an output, we want the program to turn that output OFF. Assume that the Unit is mounted at word 000. A program to turn OFF output bits 00 and 01 is shown below.

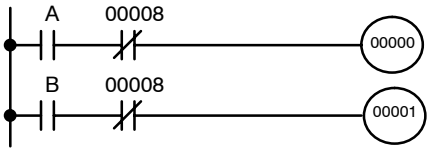

Since alarm output bit 08 covers both output bits 00 and 01, both these outputs are forced OFF as soon as output bit 08 turns ON (bits A and B can be any other bits required in the program).

Transistor Output Unit C200H-OD216

Max. Switching Capacity	0.3 A 5 to 24 VDC
Min. Switching Capacity	10 mA 5 VDC
Leakage Current	0.1 mA max.
Residual Voltage	1.5 V max.
ON Response Time	1.5 ms max.
OFF Response Time	2 ms max.
No. of Circuits	1 (8 points/common) positive common (source type)
Internal Current Consumption	10 mA 5 VDC max. 75 mA 26 VDC (8 points ON simultaneously.)
Fuse Rating	None
Power for External Supply	N/A
Weight	250 g max.
Dimensions	A-shape

Circuit Configuration

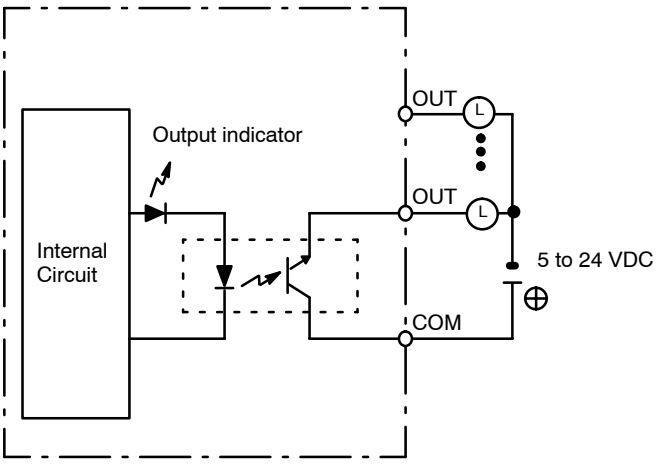

Terminal Connections

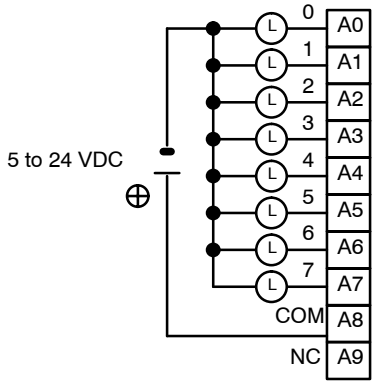

Transistor Output Unit C200H-OD217

Max. Switching Capacity	0.3 A 5 to 24 VDC
Min. Switching Capacity	10 mA 5 VDC
Leakage Current	0.1 mA max.
Residual Voltage	1.5 V max.
ON Response Time	1.5 ms max.
OFF Response Time	2 ms max.
No. of Circuits	1 (12 points/common) positive common (source type)
Internal Current Consumption	10 mA 5 VDC max. 75 mA 26 VDC (8 points ON simultaneously.)
Fuse Rating	None
Power for External Supply	N/A
Weight	300 g max.
Dimensions	B-shape

Circuit Configuration

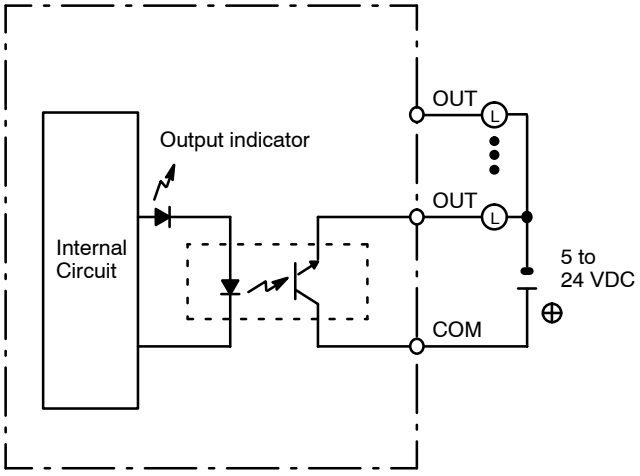

Terminal Connections

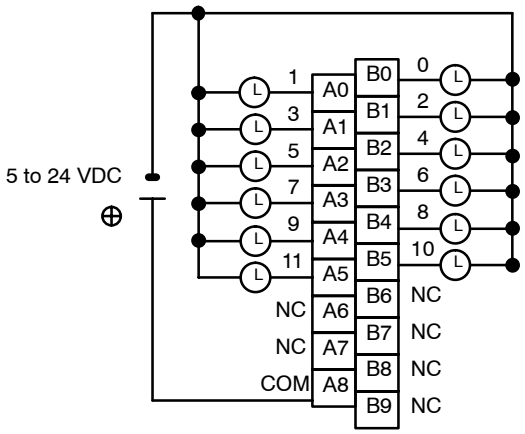

C200H-OD21A Transistor Output Unit (16 Points, Sourcing) (Load Circuit Protection Provided)

Max. Switching Capacity	24 VDC $^{+10\%}/_{-15\%}$, 1.0 A (4 A/Unit)
Leakage Current	0.1 mA max.
Residual Voltage	0.8 V max.
ON Response Time	0.1 ms max.
OFF Response Time	0.3 ms max.
No. of Circuits	1 (16 points/common)
Internal Current Consumption	160 mA 5 VDC max.
Load Short-circuit Protection	Detection current: 1.2 A min (1.6 A typical)
Power for External Supply	35 mA 24 VDC $^{+10\%}/_{-15\%}$ min.
Weight	400 g max.
Alarm Output (See note 1.)	No. of outputs: 1 (2 kΩ internal resistor), Max. output current: 10 mA Connectable Units: Only the following DC Input Units can be connected: C200H-ID001, ID211, ID212, IM211 (DC), IM212 (DC), ID215, ID501, MD115, MD215, MD501
Reset Input	Used when alarm output turns ON. Value will depend on the external power supply. (See note 2.)
Load Short-circuit Protection	Detection current: 1.2 A min. (1.6 A typical)
Dimensions	B-shape

Circuit Configuration

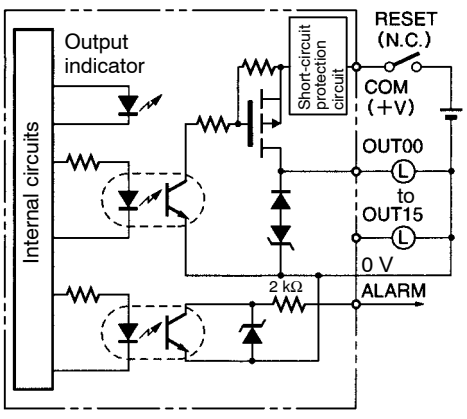

Note When short-circuit/overload protection is activated, all 16 outputs will be switched OFF and the ALARM output becomes active (low level). The problem can be detected externally by connecting a DC Input Unit to

the ALARM output or by connecting an alarm output indicator. It's not possible to connect both the Input Unit and the indicator at the same time. Unless the external I/O power supply is connected and turned ON, the indicator will not light even if the output contact turns ON.

Terminal Connections

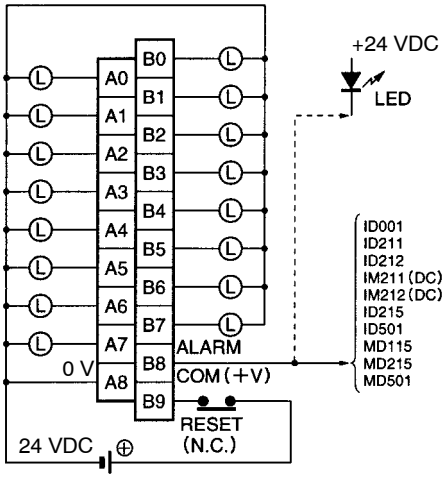

Note When the ALARM output turns ON, remove the cause of the high current and then shut off the external power supply for approx. 1 second. After confirming that the cause has been removed, turn ON the power supply again to reset the output. As shown in the diagram, it is recommended that a relay or switch that turns ON or OFF only the external power supply be connected right before the B9 (+V). Check that this relay or switch has a contact capacity higher than the external power supply current consumption (35 mA + load current minimum).

Triac Output Unit C200H-OA122-E

Max. Switching Capacity	1.2 A 120 VAC, 50/60 Hz (4 A/Unit)
Max. Inrush Current	15 A (pulse width: 100 ms) 30 A (pulse width: 10 ms)
Min. Switching Capacity	100 mA 10 VAC/50 mA 24 VAC/10 mA 100 VAC min.
Leakage Current	1.5 mA (120 VAC) max.
Residual Voltage	1.5 VAC max. (50 to 1,200 mA)/ 5 VAC max. (10 to 50 mA)
ON Response Time	1 ms max.
OFF Response Time	1/2 of load frequency+1 ms or less.
No. of Circuits	1 (8 points/common)
Internal Current Consumption	180 mA 5 VDC max.
Fuse Rating	5 A 125 V (5.2-dia.x20)
Power for External Supply	N/A
Weight	300 g max.
Dimensions	E-shape

Circuit Configuration

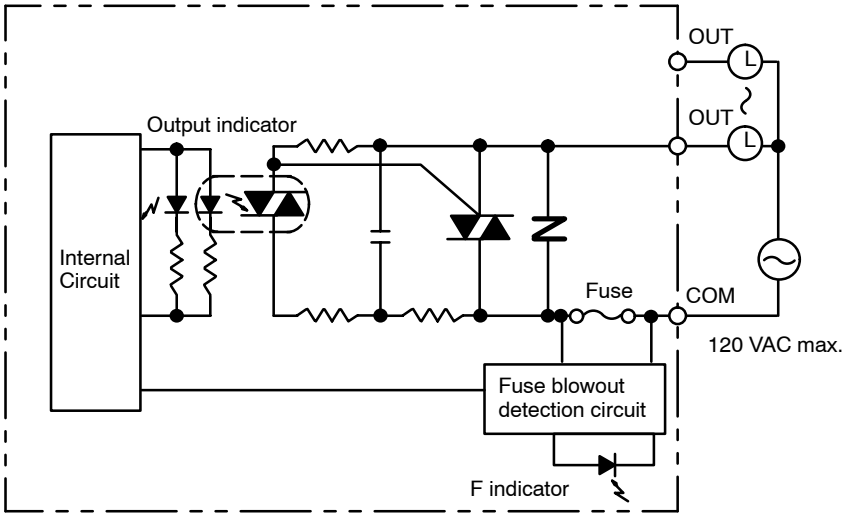

Fuse: 5 A 125 V (5.2-dia.x20) FGMT (Fuji Terminal Industry Co., Ltd.)

Note When the fuse blows, the F indicator lights and bit 08 turns ON. Bits 08 through 15 cannot be used as IR bits.

Terminal Connections

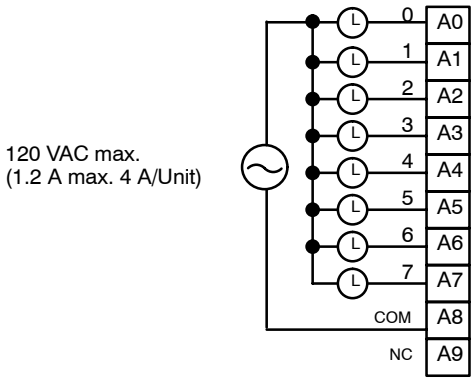

Triac Output Unit C200H-OA221

Max. Switching Capacity	1 A 250 VAC, 50/60 Hz (4 A/Unit)
Min. Switching Capacity	10 mA (resistive load)/40 mA (inductive load) 10 VAC
Leakage Current	3 mA (100 VAC) max./6 mA (200 VAC) max.
Residual Voltage	1.2 V max.
ON Response Time	1 ms max.
OFF Response Time	1/2 of load frequency or less.
No. of Circuits	1 (8 points/common)
Internal Current Consumption	140 mA 5 VDC max.
Fuse Rating	5 A 250 V (5.2-dia.x20)
Power for External Supply	N/A
Weight	250 g max.
Dimensions	A-shape

Circuit Configuration

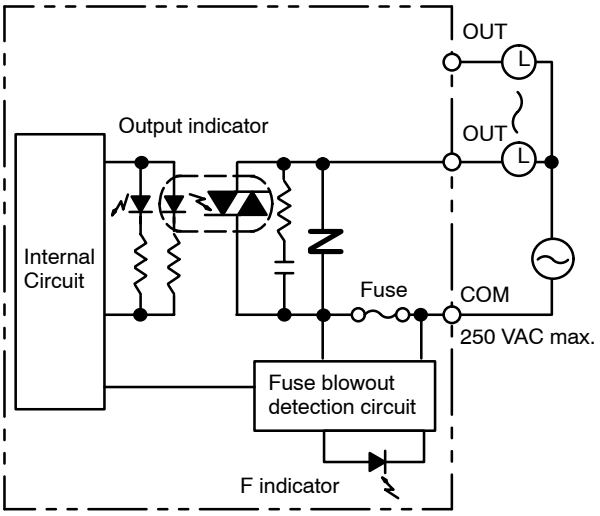

Fuse: 5 A 250 V (5.2-dia.x20) MF51SH (JIS)

Note When the fuse blows, the F indicator lights and bit 08 turns ON. Bits 08 through 15 cannot be used as IR bits.

Terminal Connections

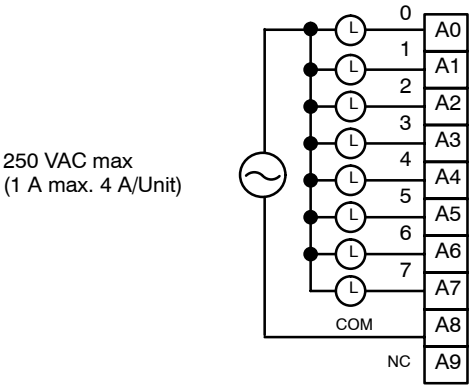

Triac Output Unit C200H-OA222V

Max. Switching Capacity	0.3 A 250 VAC, 50/60 Hz (2 A/Unit)
Min. Switching Capacity	10 mA (resistive load)/40 mA (inductive load) 10 VAC
Leakage Current	3 mA (100 VAC) max./6 mA (200 VAC) max.
Residual Voltage	1.2 V max.
ON Response Time	1/2 of load frequency or less
OFF Response Time	1/2 of load frequency or less.
No. of Circuits	1 (12 points/common)
Internal Current Consumption	200 mA 5 VDC max.
Fuse Rating	3 A 250 V (5.2-dia.x20)
Power for External Supply	N/A
Weight	400 g max.
Dimensions	B-shape

Circuit Configuration

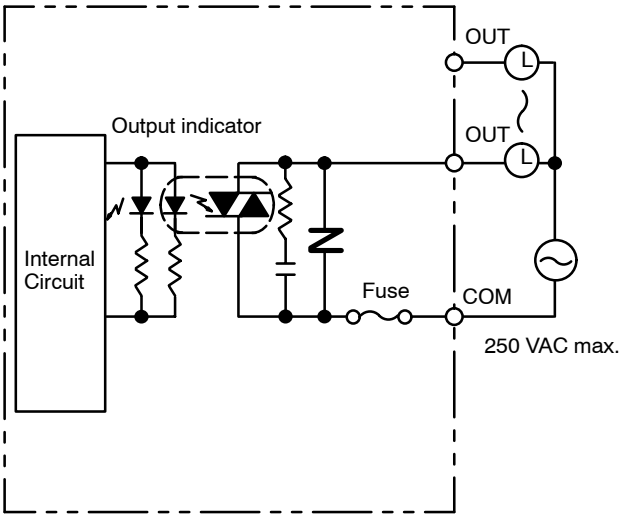

Fuse: 3 A 250 V (5.2-dia.x20) MQ4 (SOC)

Note 1. No blown fuse detector circuit is provided.
2. Check the fuse when there is no output.

Terminal Connections

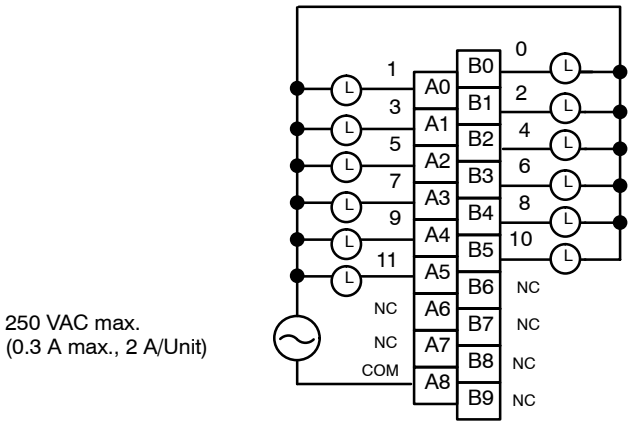

Triac Output Unit C200H-OA223

Max. Switching Capacity	1.2 A 250 VAC, 50/60 Hz (4 A/Unit)
Max. Inrush Current	15 A (pulse width: 100 ms) 30 A (pulse width: 10 ms)
Min. Switching Capacity	100 mA 10 VAC/50 mA 24 VAC/10 mA 100 VAC min.
Leakage Current	1.5 mA (120 VAC) max./3 mA (240 VAC) max.
Residual Voltage	1.5 VAC max. (50 to 1,200 mA)/ 5 VAC max. (10 to 50 mA)
ON Response Time	1 ms max.
OFF Response Time	1/2 of load frequency+1 ms or less.
No. of Circuits	1 (8 points/common)
Internal Current Consumption	180 mA 5 VDC max.
Fuse Rating	5 A 250 V (5.2-dia.x20)
Power for External Supply	N/A
Weight	300 g max.
Dimensions	E-shape

Circuit Configuration

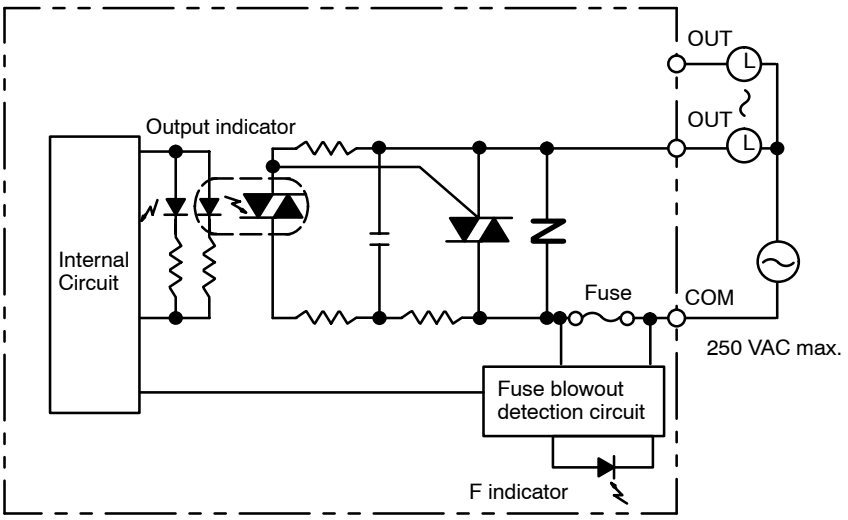

Fuse: 5 A 250 V (5.2-dia.x20) HT (SOC)

Note When the fuse blows, the F indicator lights and bit 08 turns ON. Bits 08 through 15 cannot be used as IR bits.

Terminal Connections

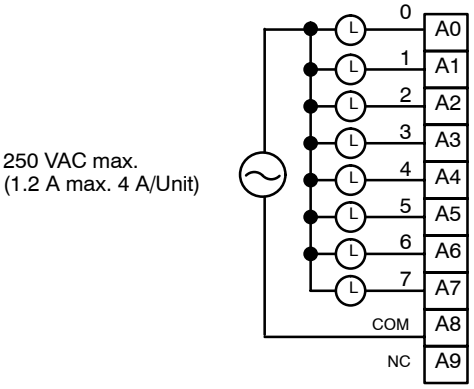

Triac Output Unit C200H-OA224

Max. Switching Capacity	0.5 A 250 VAC, 50/60 Hz (2 A/Unit)
Max. inrush current	10 A (pulse width: 100ms) 20 A (pulse width: 10 ms)
Min. Switching Capacity	100 mA 10 VAC/50 mA 24 VAC/10 mA 100 VAC min.
Leakage Current	1.5 mA (120 VAC) max./3 mA (240 VAC) max.
Residual Voltage	1.5 VAC max. (50 to 500 mA)/5 VAC max. (10 to 50 mA)
ON Response Time	1 ms max.
OFF Response Time	1/2 of load frequency + 1 ms or less.
No. of Circuits	1 (12 points/common)
Internal Current Consumption	270 mA 5 VDC max.
Fuse Rating	3.15 A 250 V (5.2-dia.x20)
Power for External Supply	N/A
Weight	300 g max.
Dimensions	B-shape

Circuit Configuration

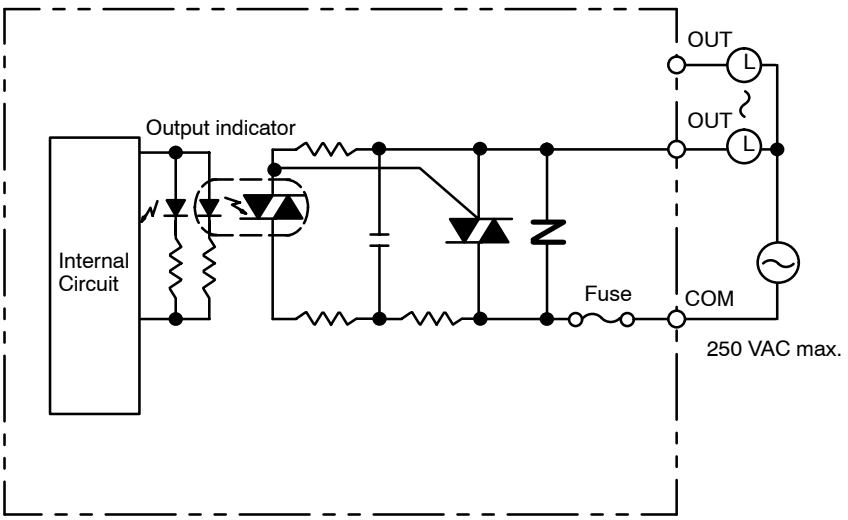

Fuse: 3.15 A 250 V (5.2-dia.x20) MT4 (SOC)

Note 1. No blown fuse detector circuit is provided.
2. Check the fuse when there is no output.

Terminal Connections

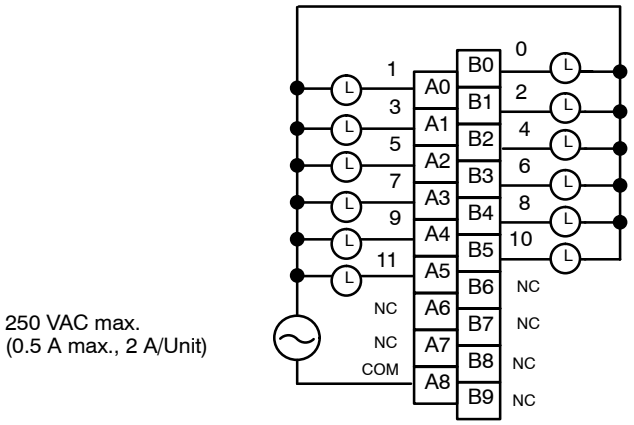

Group-2 High-density I/O Units

In the following diagrams, “m” is the first word allocated to the Unit in PC memory.

DC Input Unit C200H-ID111 (64 Points)

Rated Input Voltage	12 VDC $^{+10\%}/_{-15\%}$
Operating Input Voltage	10.2 to 13.2 VDC
Input Impedance	2.7 kΩ
Input Current	4.1 mA (at 12 VDC)
ON Voltage	8.0 VDC min.
OFF Voltage	3.0 VDC max.
ON Response Time	1.0 ms max.
OFF Response Time	1.0 ms max.
No. of Circuits	2 (32 points/common)
Internal Current Consumption	120 mA 5 VDC max.
Weight	250 g max.
Dimensions	D-shape

Circuit Configuration

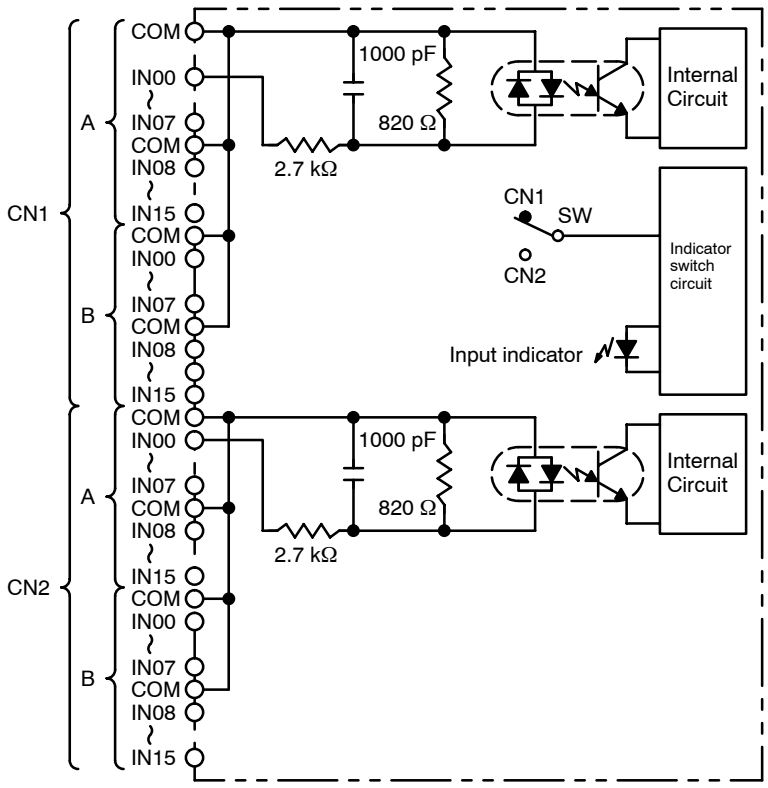

Terminal Connections

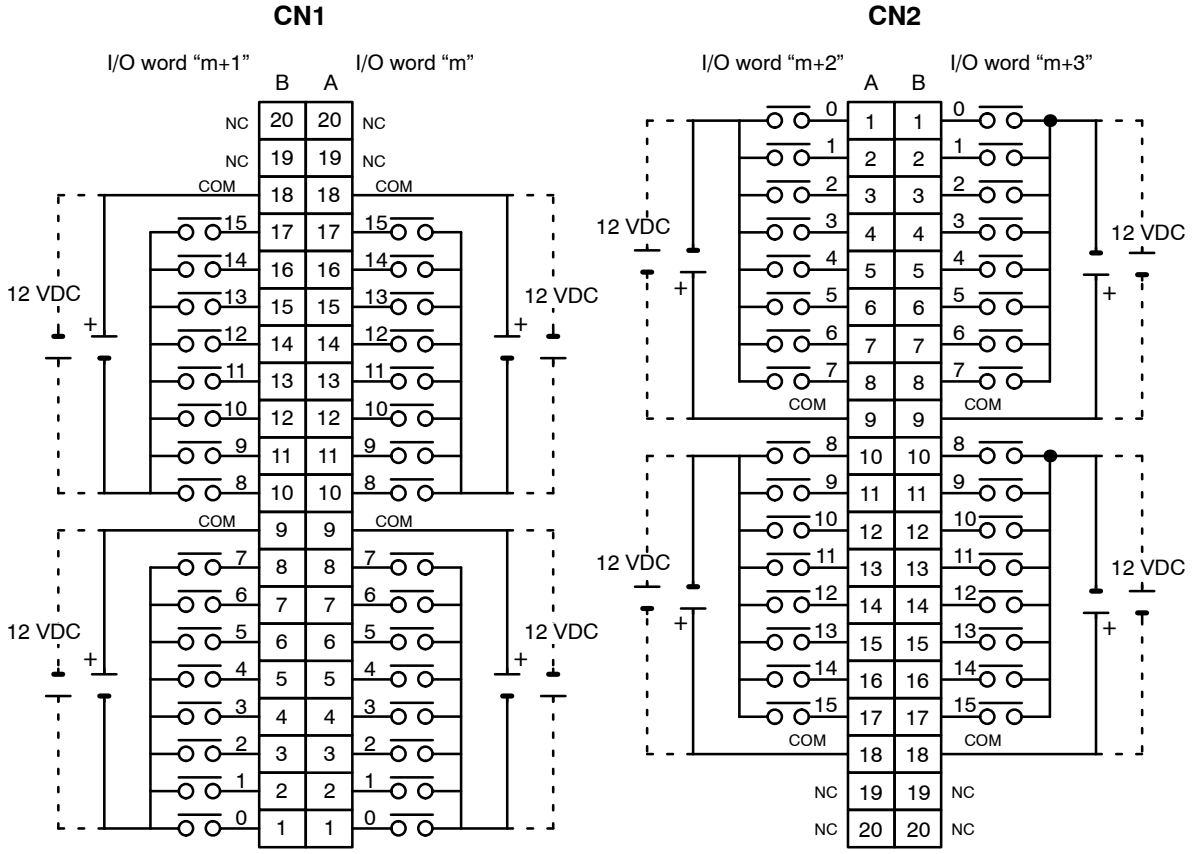

Note 1. I/O word "m" is determined by the I/O number setting (m = IR 030 + 2 × I/O number). For the C200HX/C200HG/C200HX/C200HW PC (0 to F Unit), the I/O word is as follows;

0 to 9 Unit: m= IR 030 + 2 × I/O number

A to F Unit: m= IR 330 + 2 × (I/O number – A)

2. The power can be supplied in either polarity, but the same polarity must be used for all COM terminals in each connector. Connect power supply wiring to every COM terminal, even though the COM terminals in each connector are connected internally.

DC Input Unit C200H-ID216 (32 Points)

Rated Input Voltage	24 VDC
Operating Input Voltage	20.4 to 26.4 VDC
Input Impedance	5.6 kΩ
Input Current	4.1 mA (at 24 VDC)
ON Voltage	14.4 VDC min.
OFF Voltage	5.0 VDC max.
ON Response Time	1.0 ms max.
OFF Response Time	1.0 ms max.
No. of Circuits	1 (32 points/common) All 32 points cannot be turned ON simultaneously at high temperatures. Refer to the following graph.
Internal Current Consumption	100 mA 5 VDC max.
Weight	180 g max.
Dimensions	C-shape

Circuit Configuration and Simultaneously Usable Points

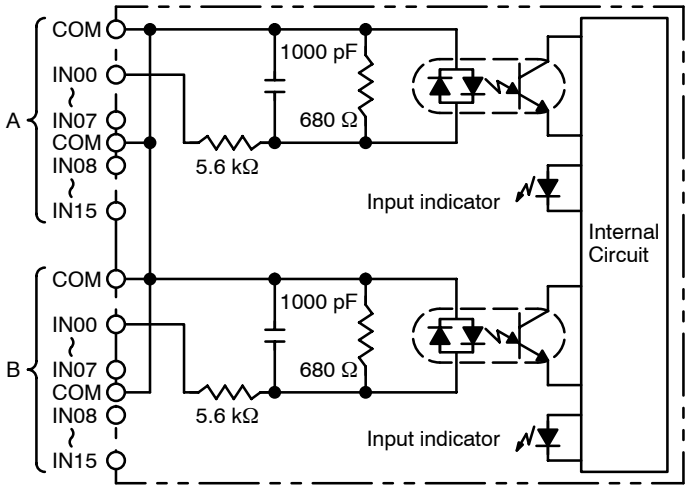

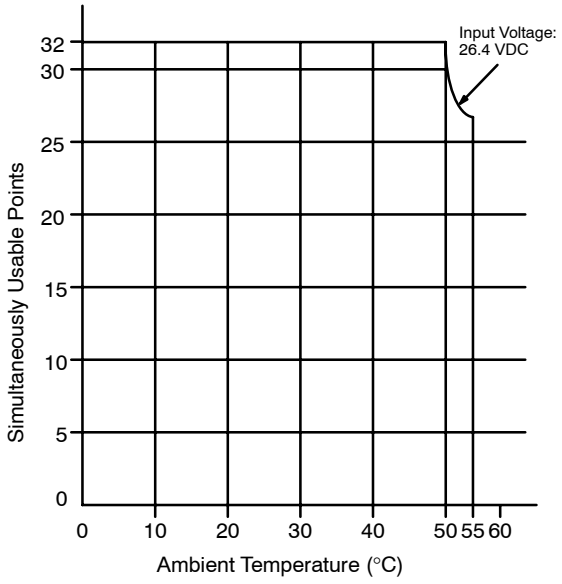

Terminal Connections

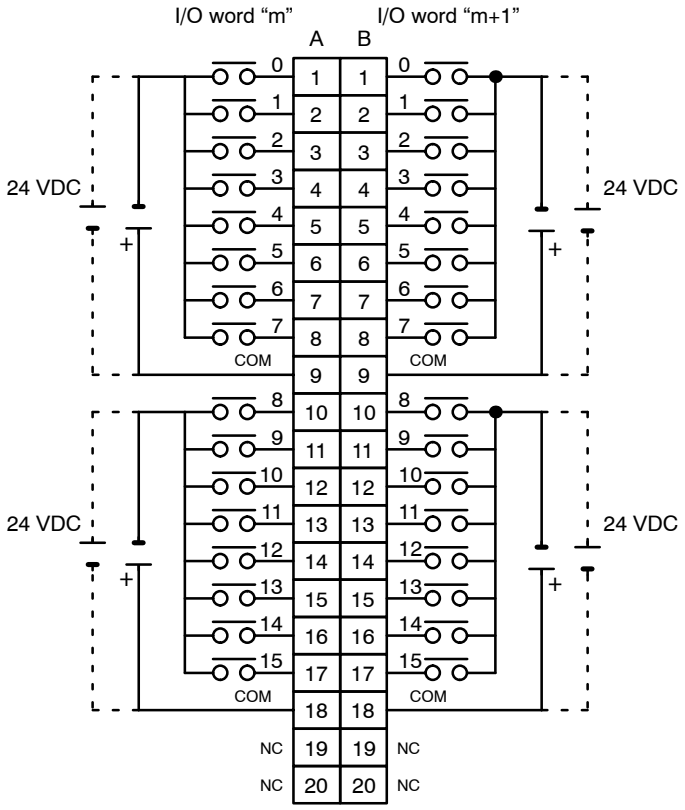

Note 1. I/O word "m" is determined by the I/O number setting (m = IR 030 + 2 × I/O number).

2. The power can be supplied in either polarity, but the same polarity must be used for all COM terminals. Connect power supply wiring to every COM terminal, even though the COM terminals are connected internally.

DC Input Unit C200H-ID217 (64 Points)

Rated Input Voltage	24 VDC
Operating Input Voltage	20.4 to 26.4 VDC
Input Impedance	5.6 kΩ
Input Current	4.1 mA (at 24 VDC)
ON Voltage	14.4 VDC min.
OFF Voltage	5.0 VDC max.
ON Response Time	1.0 ms max.
OFF Response Time	1.0 ms max.
No. of Circuits	2 (32 points/common) All 64 points cannot be turned ON simultaneously at high temperatures. Refer to the following graph.
Internal Current Consumption	120 mA 5 VDC max.
Weight	250 g max.
Dimensions	D-shape

Circuit Configuration and Simultaneously Usable Points

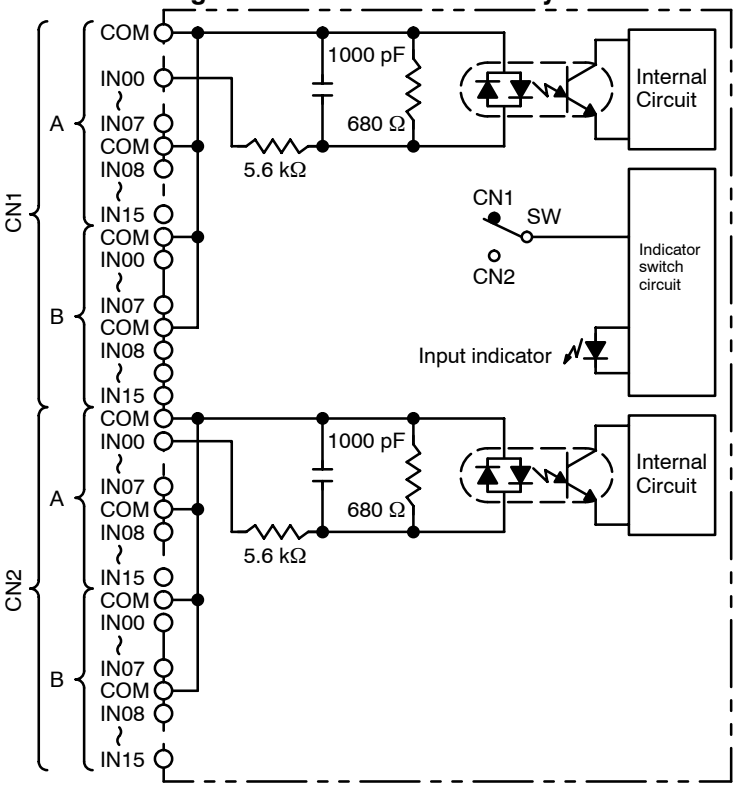

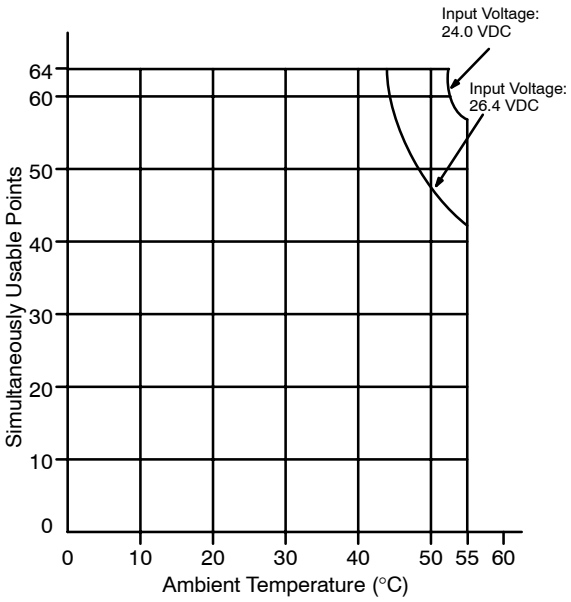

Terminal Connections

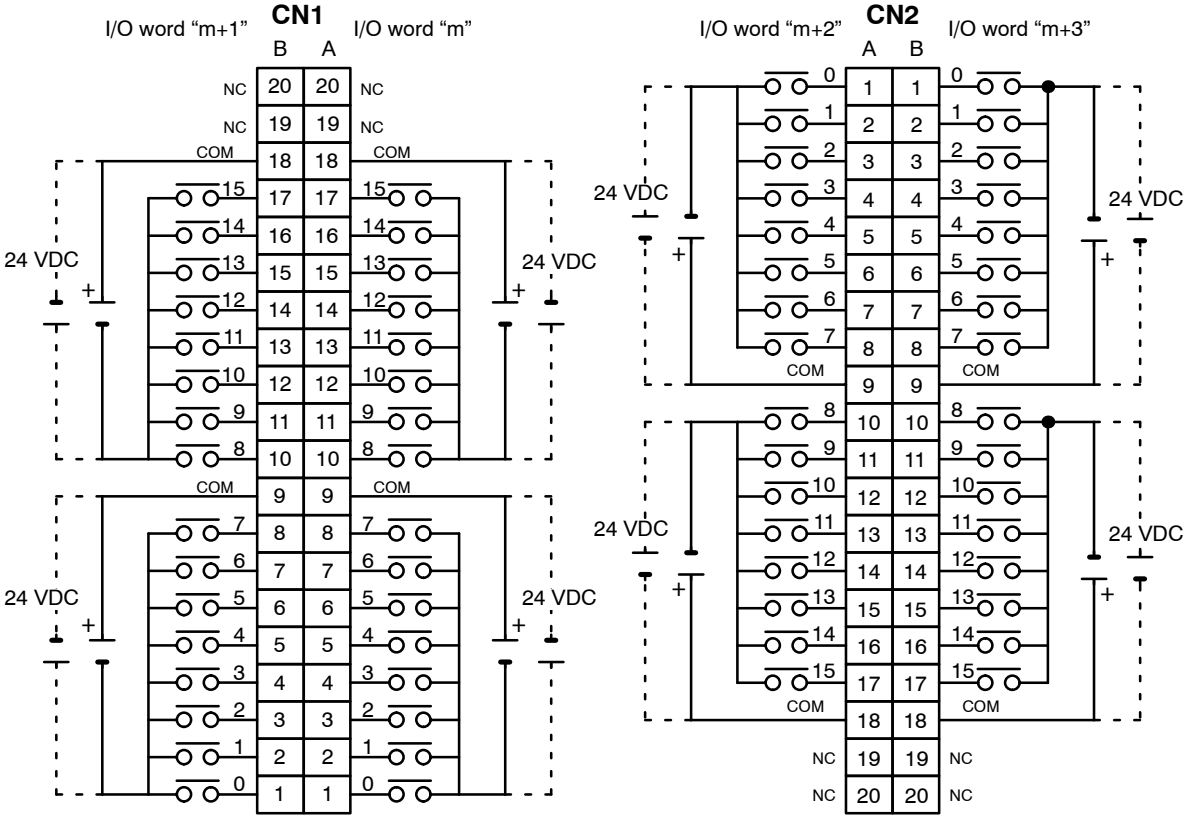

Note 1. I/O word "m" is determined by the I/O number setting (m = IR 030 + 2 × I/O number).

2. The power can be supplied in either polarity, but the same polarity must be used for all COM terminals in each connector. Connect power supply wiring to every COM terminal, even though the COM terminals in each connector are connected internally.

DC Input Unit C200H-ID218

Rated Input Voltage	24 VDC $^{+10\%}/_{-15\%}$
Input Impedance	3.9 kΩ
Input Current	6 mA (at 24 VDC)
ON Voltage/ON Current	15.4 VDC min./3.5 mA min.
OFF Voltage/OFF Current	5.0 VDC max./1 mA max.
ON Response Time	1.0 ms max.
OFF Response Time	1.0 ms max.
No. of Circuits	32 (32 points/common) **Note** The number of points that can be ON simultaneously is limited according to the ambient temperature. Refer to the following diagram for details.
Internal Current Consumption	100 mA 5 VDC max.
Weight	180 g max.

Circuit Configuration

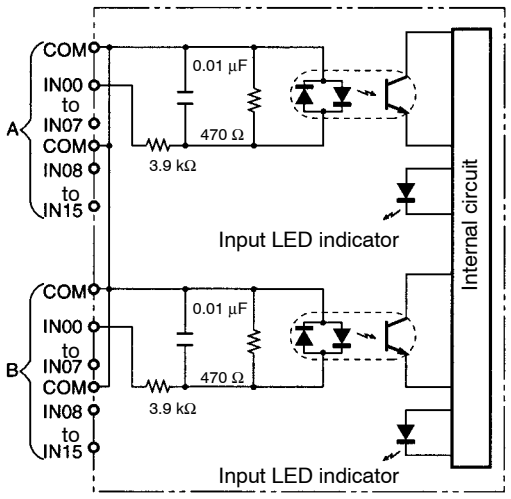

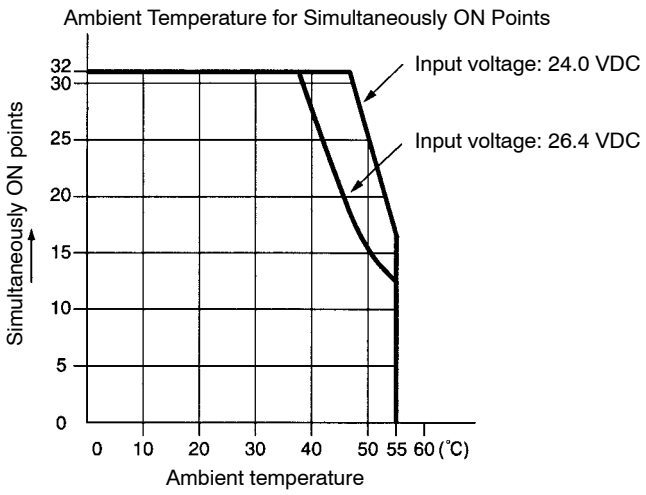

Terminal Connections

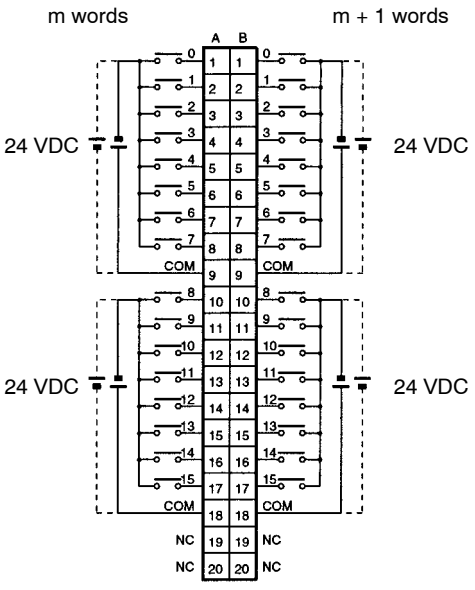

Note 1. The polarity of the input power supply can be either positive or negative. The polarity of all commons, however, must be the same.

2. COM terminals must all be wired even though they are connected internally.

DC Input Unit C200H-ID219

Rated Input Voltage	24 VDC $^{+10\%}/_{-15\%}$
Input Impedance	3.9 kΩ
Input Current	6 mA (at 24 VDC)
ON Voltage/ON Current	15.4 VDC min./3.5 mA min.
OFF Voltage/OFF Current	5.0 VDC max./1 mA max.
ON Response Time	1.0 ms max.
OFF Response Time	1.0 ms max.
No. of Circuits	64 (32 points/common) **Note** The number of points that can be ON simultaneously is limited according to the ambient temperature. Refer to the following diagram for details.
Internal Current Consumption	120 mA 5 VDC max.
Weight	250 g max.

Circuit Configuration

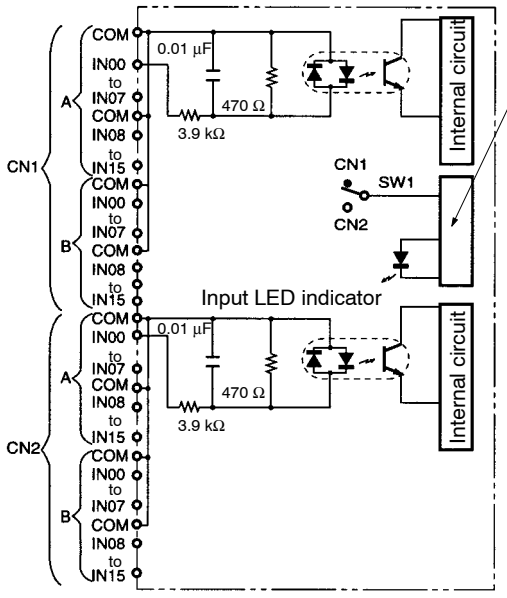

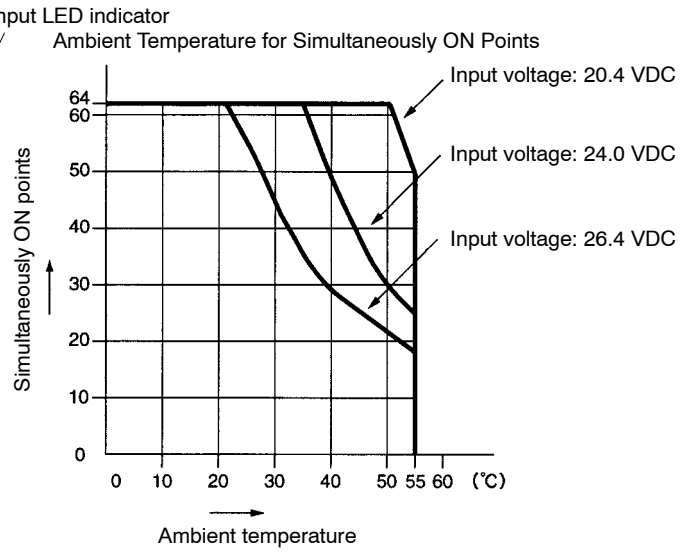

Terminal Connections

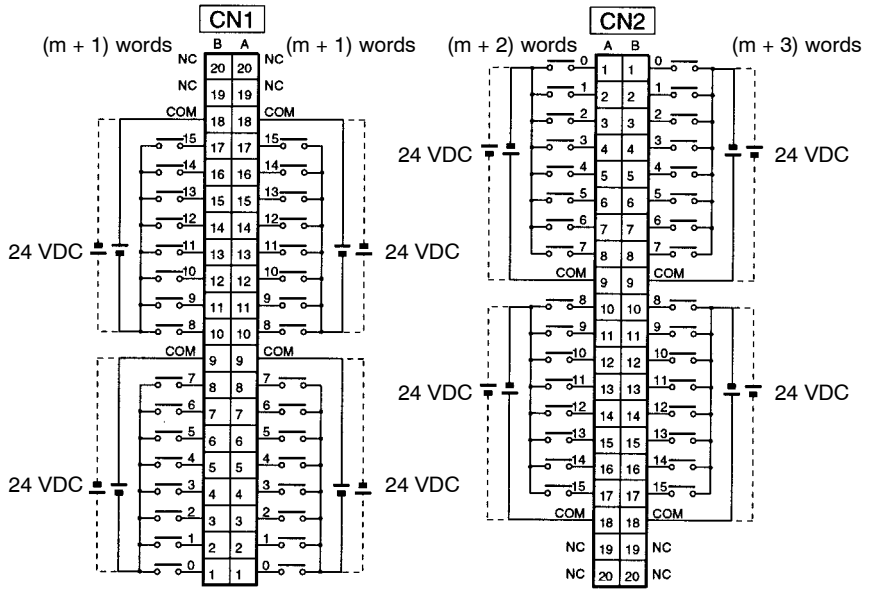

Note 1. The polarity of the input power supply can be either positive or negative. The polarity of all commons for CN1 and CN2, however, must be the same.

2. COM terminals for CN1 and CN2 must all be wired even though they are connected internally.

Transistor Output Unit C200H-OD218 (32 Points)

Max. Switching Capacity	16 mA 4.5 VDC to 100 mA 26.4 VDC (see below)
Min. Switching Capacity	None
Leakage Current	0.1 mA max.
Residual Voltage	0.8 V max.
ON Response Time	0.1 ms max.
OFF Response Time	0.4 ms max.
No. of Circuits	1 (32 points/common)
Internal Current Consumption	180 mA 5 VDC max.
Fuse Rating	3.5 A (The fuse is not user-replacable.)
Power for External Supply	110 mA 5 to 24 VDC±10% min. (3.4 mA × number of ON pts)
Weight	180 g max.
Dimensions	C-shape

Circuit Configuration and Maximum Switching Capacity

Units manufactured on or before January 28, 2000
(manufacturing numbers 2810 or earlier*)

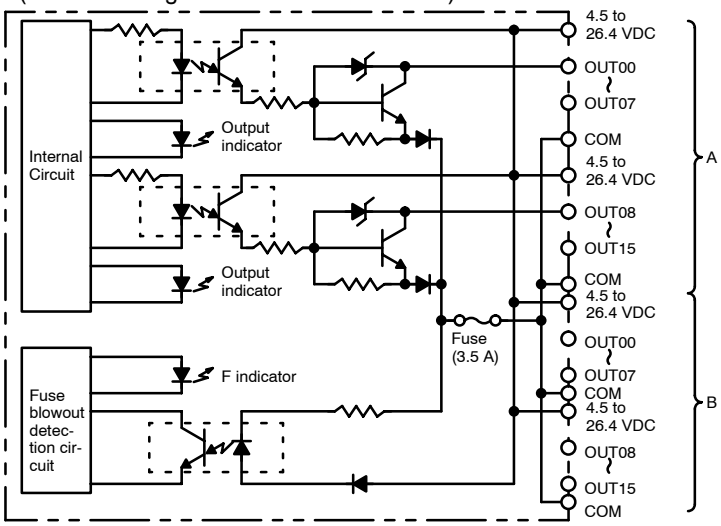

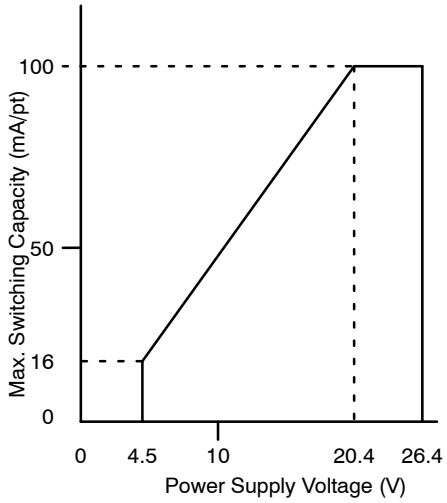

Units manufactured between January 31, 2000 and
October 9, 2002 (manufacturing numbers 3110 to 09X2)

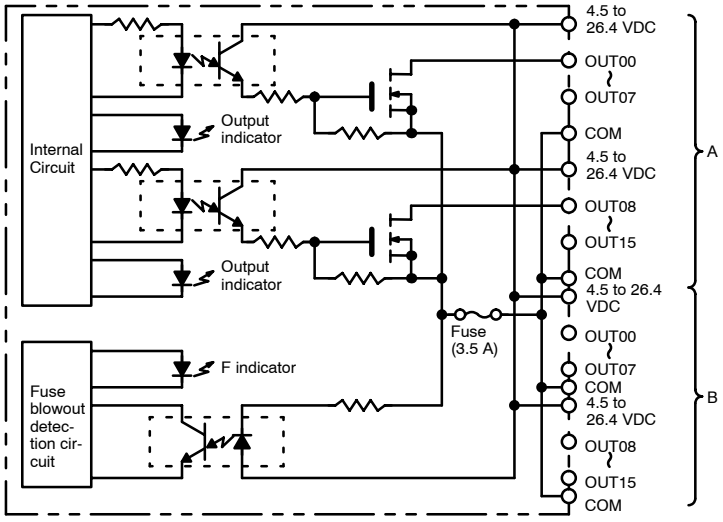

Units manufactured on or after October 10, 2002
(manufacturing numbers 10X2H or later)

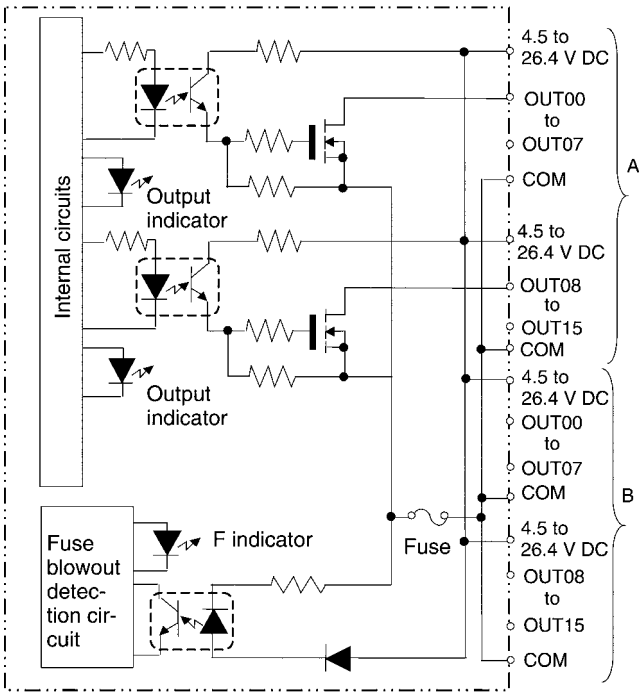

***Manufacturing Numbers**

□□Y9□

- Manufacturing plant code (A to Z or blank)
- Year: Last digit of calendar year; e.g., 1999→9, 2000→0
- Month: 1 to 9 (January to September), X (October), Y (November), Z (December)
- Day: 01 to 31

Terminal Connections

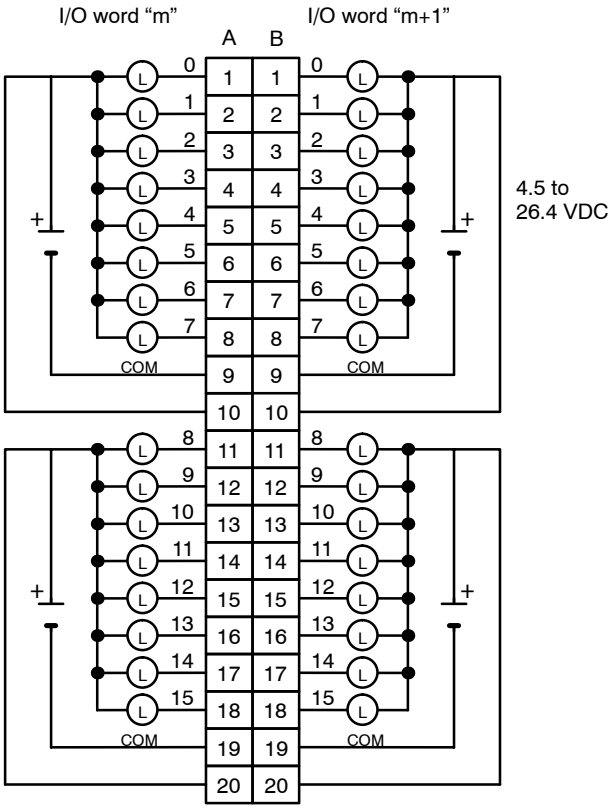

Note 1. I/O word “m” is determined by the I/O number setting (m = IR 030 + 2 × I/O number).

2. When the fuse blows, the F indicator lights and the error flag in AR 02 corresponding to the I/O number is turned ON. I/O numbers 0 to 9 correspond to AR 0205 to AR 0214. For the C200HX/C200HG/C200HX/C200HW PC (0 to F Unit), the following AR and IR bits turn ON;
   0 to 9 Unit: AR 0205 to AR 0214 and IR 28000 to IR 28009 turn ON.
   A to F Unit: IR 28010 to IR 28015 turn ON.

3. The interruption of power from the external power supply is treated the same as a fuse blowout.

4. Connect power supply wiring to every COM terminal, even though the COM terminals are connected internally.

5. When wiring output circuits, be sure to use the correct polarity for the external power supplies. Wiring with incorrect polarity may result in erroneous operation of the load.

Transistor Output Unit C200H-OD219 (64 Points)

Max. Switching Capacity	16 mA 4.5 VDC to 100 mA 26.4 VDC (see below)
Min. Switching Capacity	None
Leakage Current	0.1 mA max.
Residual Voltage	0.8 V max.
ON Response Time	0.1 ms max.
OFF Response Time	0.4 ms max.
No. of Circuits	2 (32 points/common)
Internal Current Consumption	270 mA 5 VDC max.
Fuses	Two 3.5 A fuses (1 fuse/common) The fuses are not user-replacable.
Power for External Supply	220 mA 5 to 24 VDC±10% min. (3.4 mA × number of ON pts)
Weight	250 g max.
Dimensions	D-shape

Circuit Configuration

Units manufactured on or before January 28, 2000
(manufacturing numbers 2810 or earlier*)

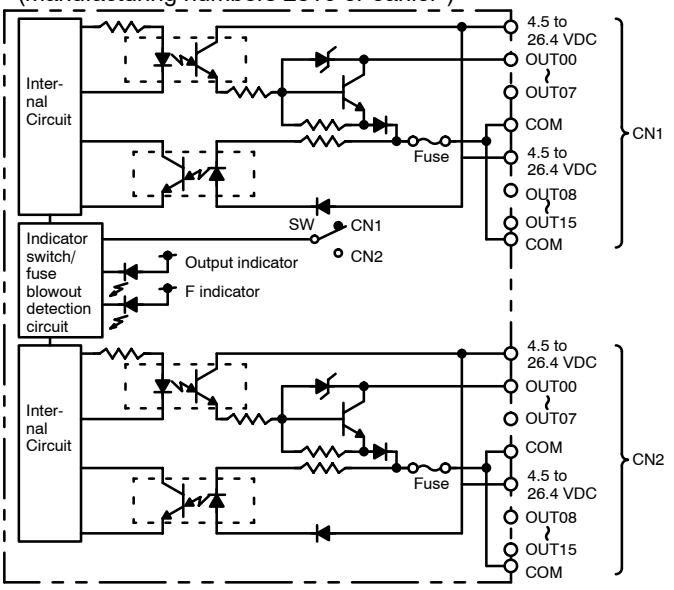

Units manufactured between January 29, 2000 and
October 10, 2002 (manufacturing numbers 3110 to 10X2)

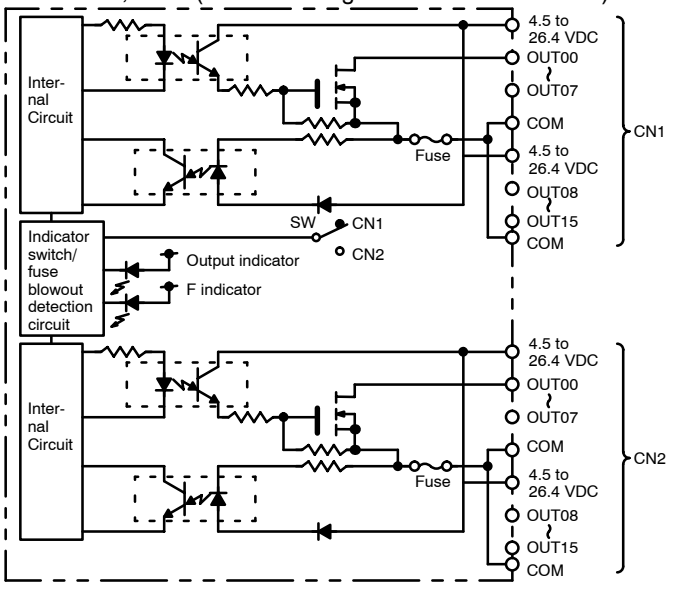

Units manufactured on or after October 11, 2002
(manufacturing numbers 11X2H or later)

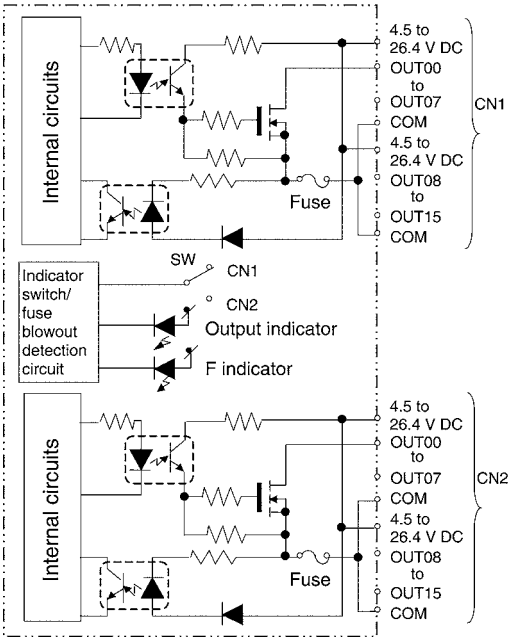

***Manufacturing Numbers**

□□Y9□

- Manufacturing plant code (A to Z or blank)
- Year: Last digit of calendar year; e.g., 1999→9, 2000→0
- Month: 1 to 9 (January to September), X (October), Y (November), Z (December)
- Day: 01 to 31

Maximum Switching Capacity

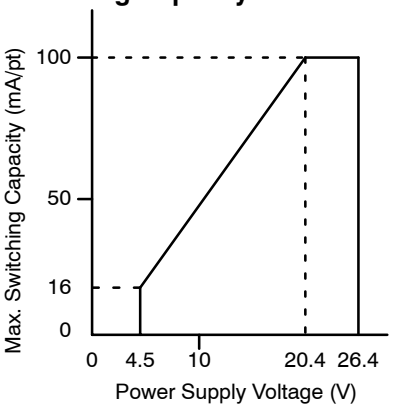

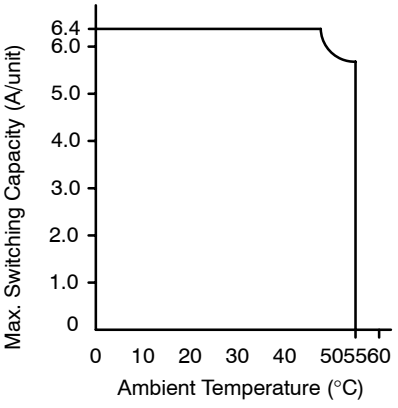

Terminal Connections

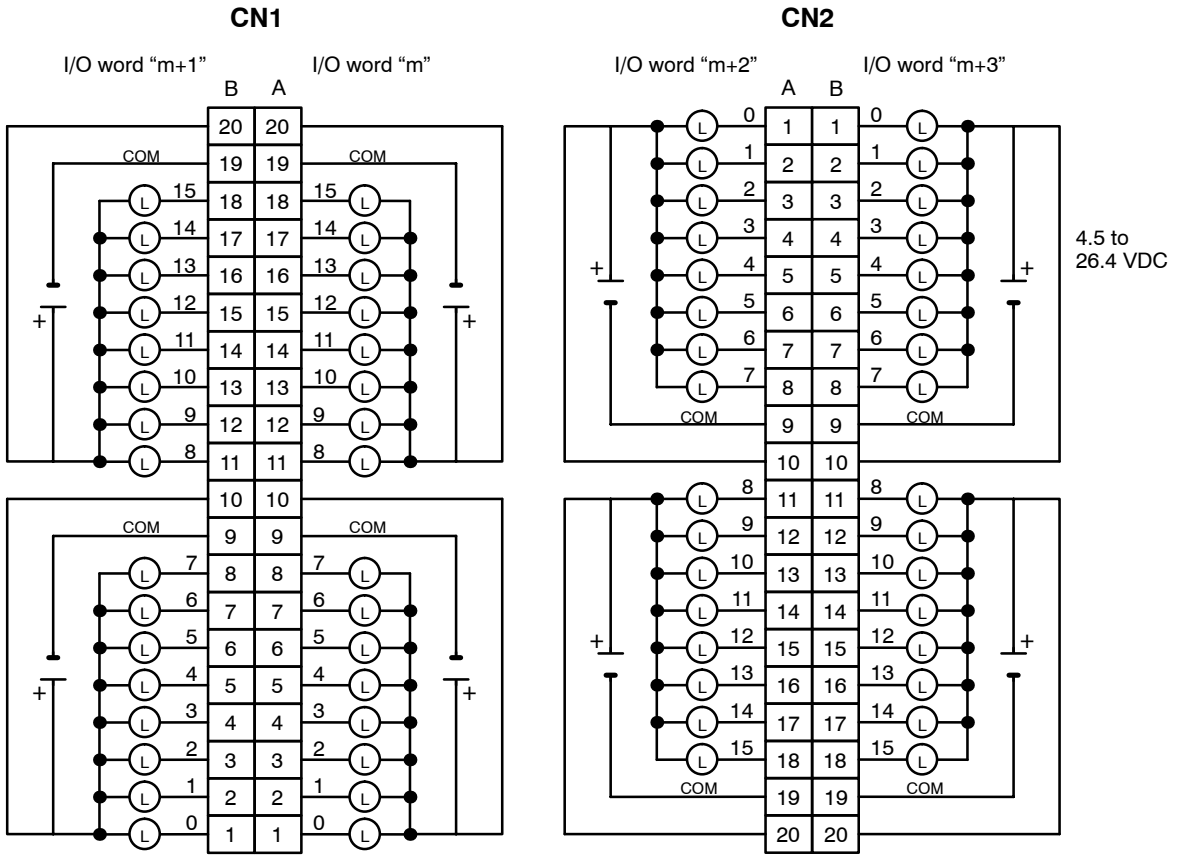

Note 1. I/O word "m" is determined by the I/O number setting (m = IR 030 + 2 × I/O number).

2. When either fuse blows, the F indicator lights and the error flag in AR 02 corresponding to the I/O number is turned ON. I/O numbers 0 to 9 correspond to AR 0205 to AR 0214.

3. The interruption of power from the external power supply is treated the same as a fuse blowout.

4. Connect power supply wiring to every COM terminal, even though the COM terminals in each connector are connected internally.

5. When wiring output circuits, be sure to use the correct polarity for the external power supplies. Wiring with incorrect polarity may result in erroneous operation of the load.

Transistor Output Unit C200H-OD21B (32 Points) (Load Short-circuit Protection Provided)

Max. Switching Current	0.5 A 24 VDC $^{+10\%}/_{-15\%}$ (5 A/Unit)
Min. Switching Current	None
Leakage Current	0.1 mA max.
Residual Voltage	0.8 V max.
ON Response Time	0.1 ms max.
OFF Response Time	0.3 ms max.
No. of Circuits	32 (32 points/common)
Internal Current Consumption	180 mA 5 VDC max.
Fuses	One 7 A fuse (1 fuse/common) The fuses are not user-replacable.
Power for External Supply	160 mA 24 VDC $^{+10\%}/_{-15\%}$ min. (5 mA × number of ON pts)
Weight	180 g max.
Alarm Indicator	Lamp F lights (unless fuse is broken).
Load Short-circuit Prevention (see note 1)	Detection current: 0.7 to 2.5 A Automatic restart after error clearance.
Dimensions	C-shape

Note When the short-circuit/overload protection is activated for a contact point, the output for that point is turned OFF. At the same time, lamp “F” lights up, and the alarm from AR0205 to AR0214 corresponding to the I/O number turns ON. After the cause of the error has been removed, the alarm will be cleared automatically when the internal temperature of the element drops.

Circuit Configuration

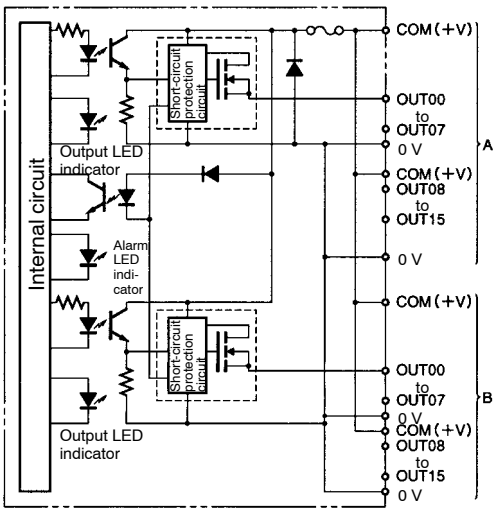

Terminal Connections

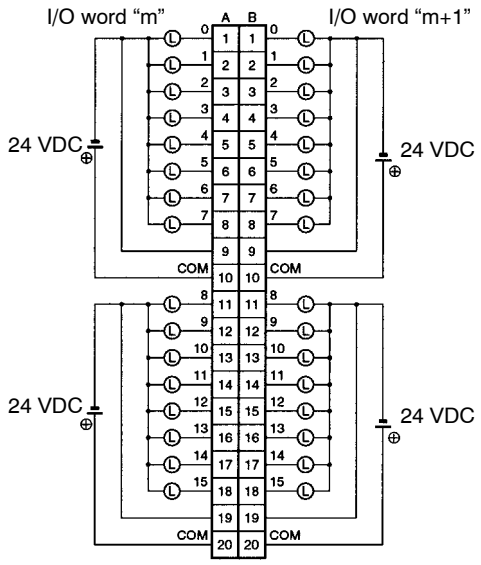

High-density I/O Units (Special I/O Units)

TTL Input Unit C200H-ID501 (32 Points)

Rated Input Voltage	5 VDC
Operating Input Voltage	4.5 to 5.5 VDC
Input Impedance	1.1 kΩ
Input Current	3.5 mA (at 5 VDC)
ON Voltage	3.0 VDC min.
OFF Voltage	1.0 VDC max.
ON Response Time	2.5 ms/15 ms max. (switchable)
OFF Response Time	2.5 ms/15 ms max. (switchable)
No. of Circuits	4 (8 points/common)
High-speed Inputs	8 points (connector 2 terminals 8 to 15, when set) Pulse width: 1 ms/4 ms min. (switchable)
Internal Current Consumption	130 mA 5 VDC max.
Weight	300 g max.
Dimensions	130×34.5×100.5 (H×W×D, in millimeters)

Circuit Configuration

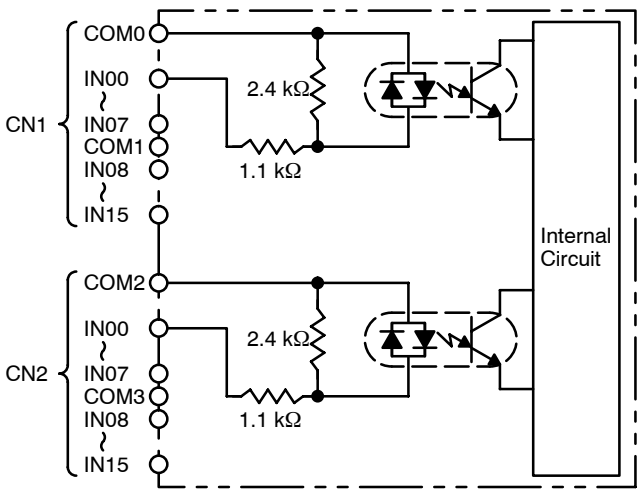

Terminal Connections

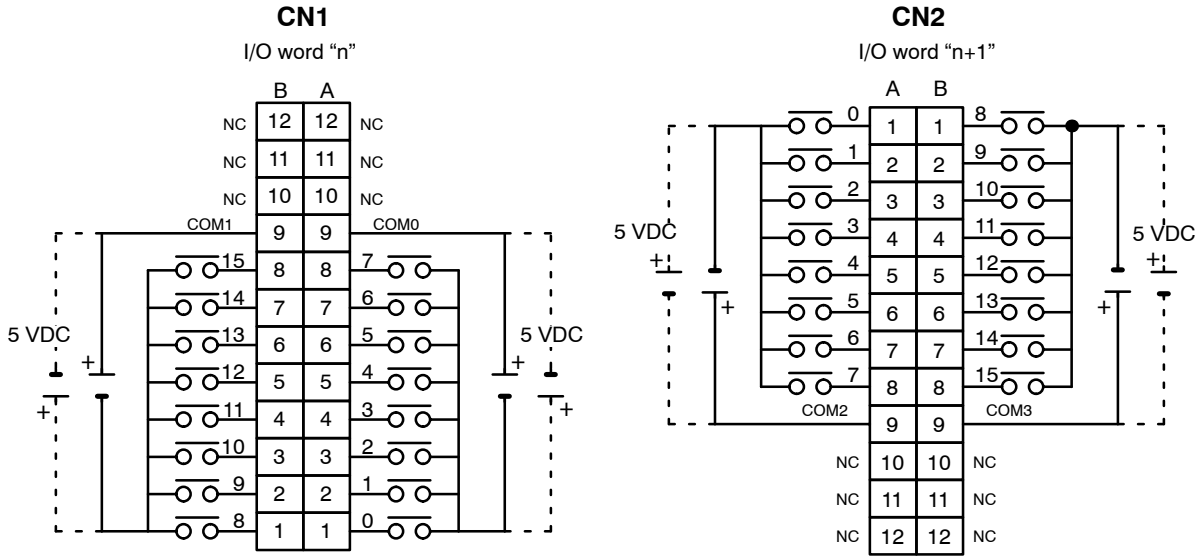

Note 1. I/O word "n" is determined by the unit number setting (n = IR 100 + 10 × unit number). For the C200HX/C200HG/C200HX/C200HW PC (0 to F Unit), the I/O word is as follows.

0 to 9 Unit: n= IR 100 + 10 × unit number

A to F Unit: n= IR 400 + 10 × (unit number – A)

2. When pin 2 of the Unit's DIP switch is ON, input points 08 to 15 in connector 2 are high-speed inputs.

DC Input Unit C200H-ID215 (32 Points)

Rated Input Voltage	24 VDC
Operating Input Voltage	20.4 to 26.4 VDC
Input Impedance	5.6 kΩ
Input Current	4.1 mA (at 24 VDC)
ON Voltage	14.4 VDC min.
OFF Voltage	5.0 VDC max.
ON Response Time	2.5 ms/15 ms max. (switchable; at 24 VDC, 25°C)
OFF Response Time	2.5 ms/15 ms max. (switchable; at 24 VDC, 25°C)
No. of Circuits	4 (8 points/common)
High-speed Inputs	8 points (connector 2 terminals 8 to 15, when set) Pulse width: 1 ms/4 ms min. (switchable)
Internal Current Consumption	130 mA 5 VDC max.
Weight	300 g max.
Dimensions	130×34.5×100.5 (H×W×D, in millimeters)

Circuit Configuration

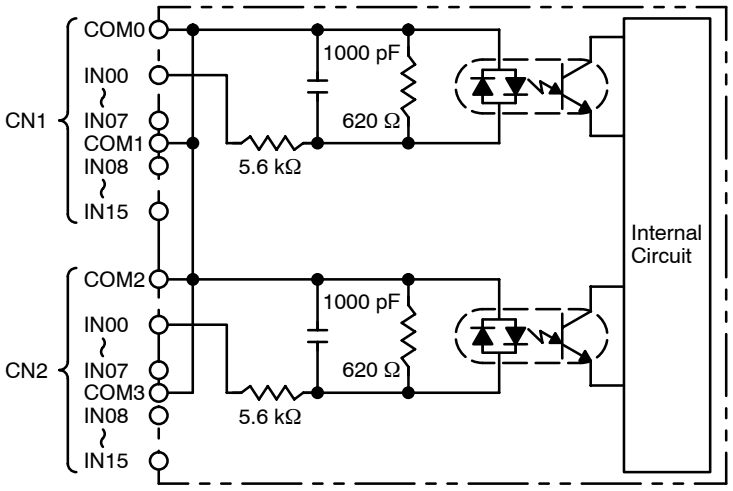

Terminal Connections

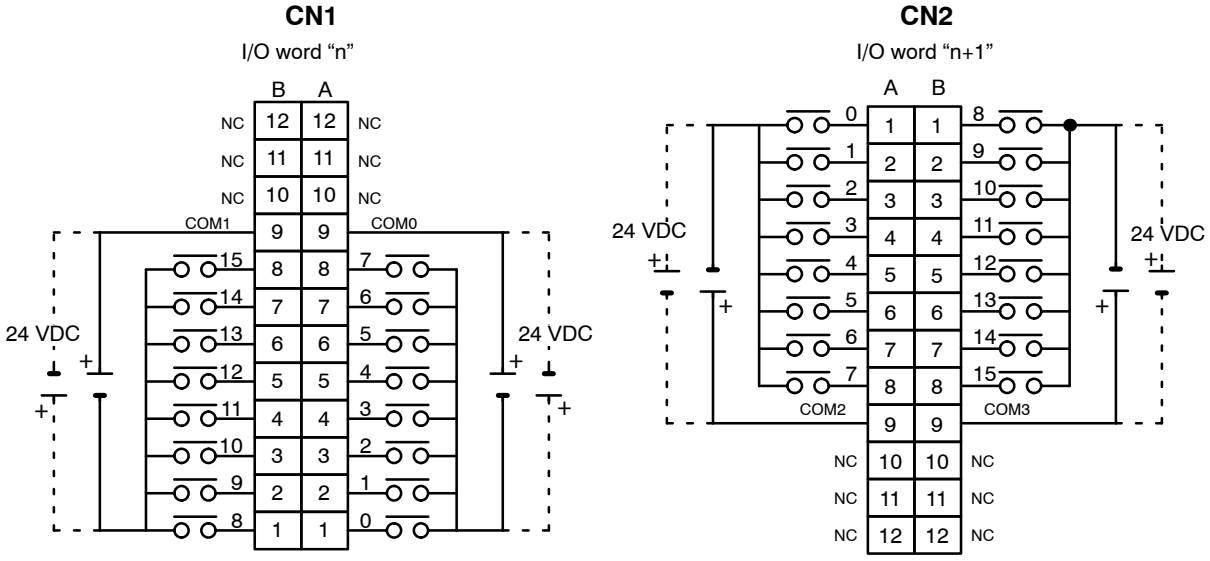

Note 1. I/O word "n" is determined by the unit number setting (n = IR 100 + 10 × unit number).
2. When pin 2 of the Unit's DIP switch is ON, input points 08 to 15 in connector 2 are high-speed inputs.
3. At high temperatures, the number of inputs that can be turned ON simultaneously is limited. Refer to the graphs on the following page for details.

Usable I/O Points (C200H-ID215)

To prevent overheating in the C200H-ID215 that can cause early failure of internal components, limit the number of input points that are ON simultaneously. As shown below, the number of points that can be on simultaneously depends on both the temperature and the input voltage.

For example, 22 pts with input voltage of 24.0 VDC can be ON at 55°C, but only 16 pts with input voltage of 26.4 VDC can be ON at 55°C. At 24.0 VDC, all 32 input pts can be ON up to 43°C, but at 26.4 VDC all 32 input pts can be ON up to 34°C.

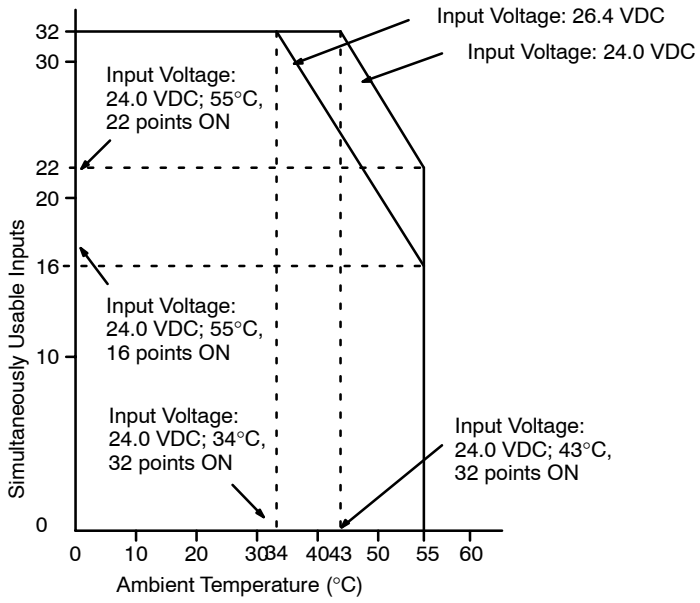

Note If the Unit is at room temperature it takes about 10 minutes for excessive heat to build up when all inputs are turned ON, so all inputs can be turned ON simultaneously for testing.

TTL Output Unit C200H-OD501 (Used as a 32-point Output Unit)

Max. Switching Capacity	5 VDC 35 mA (280 mA/common, 1.12 A/Unit; output resistance 4.7 kΩ)
Min. Switching Capacity	None
Leakage Current	0.1 mA max.
Residual Voltage	0.4 V max.
ON Response Time	0.2 ms max.
OFF Response Time	0.3 ms max.
No. of Circuits	4 (8 points/common)
Internal Current Consumption	220 mA 5 VDC max.
Fuses	4 (1 fuse/common; fuses are not user-replacable.)
Power for External Supply	39 mA 5 VDC min. (1.2 mA × no. of outputs ON)
Weight	300 g max.
Dimensions	130×34.5×100.5 (H×W×D, in millimeters)

Circuit Configuration

Units manufactured on or before November 13, 2002
(manufacturing numbers 13Y2 or earlier)

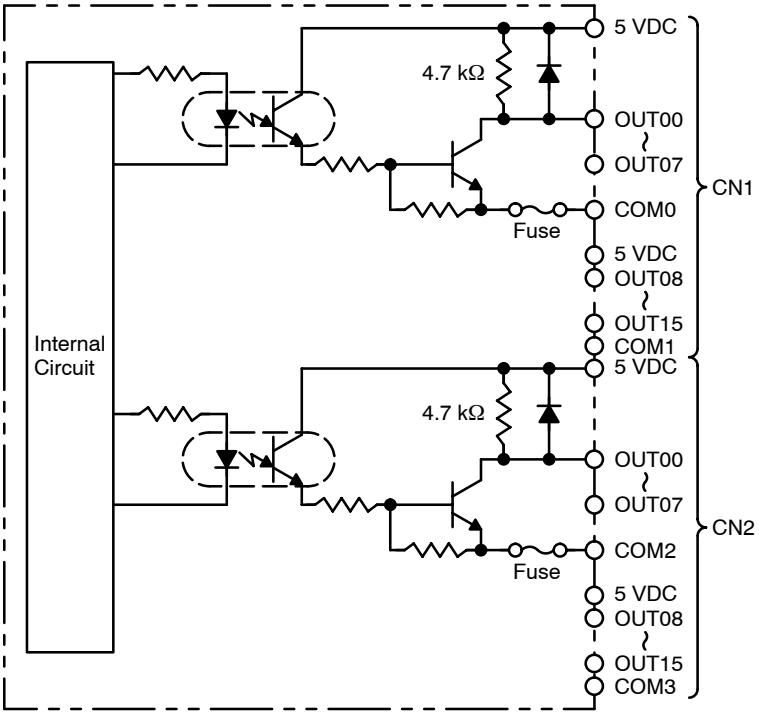

Units manufactured on or after November 14, 2002
(manufacturing numbers 14Y2H or later)

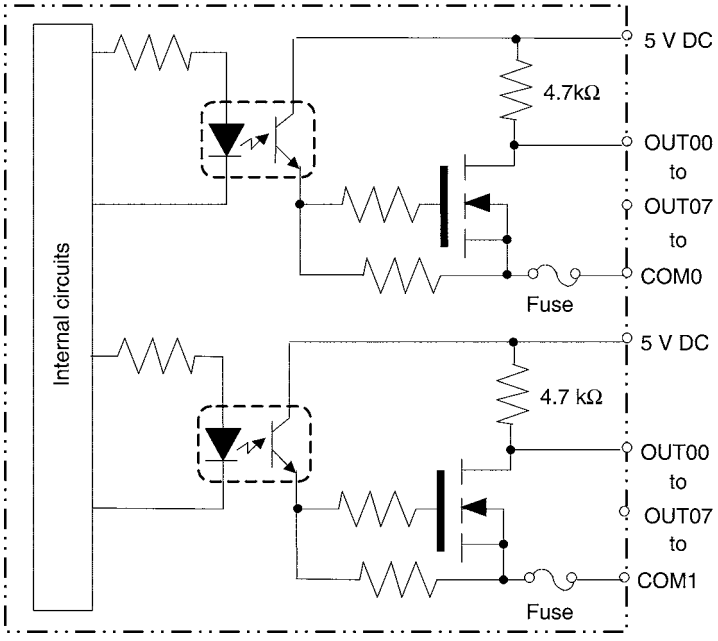

Terminal Connections

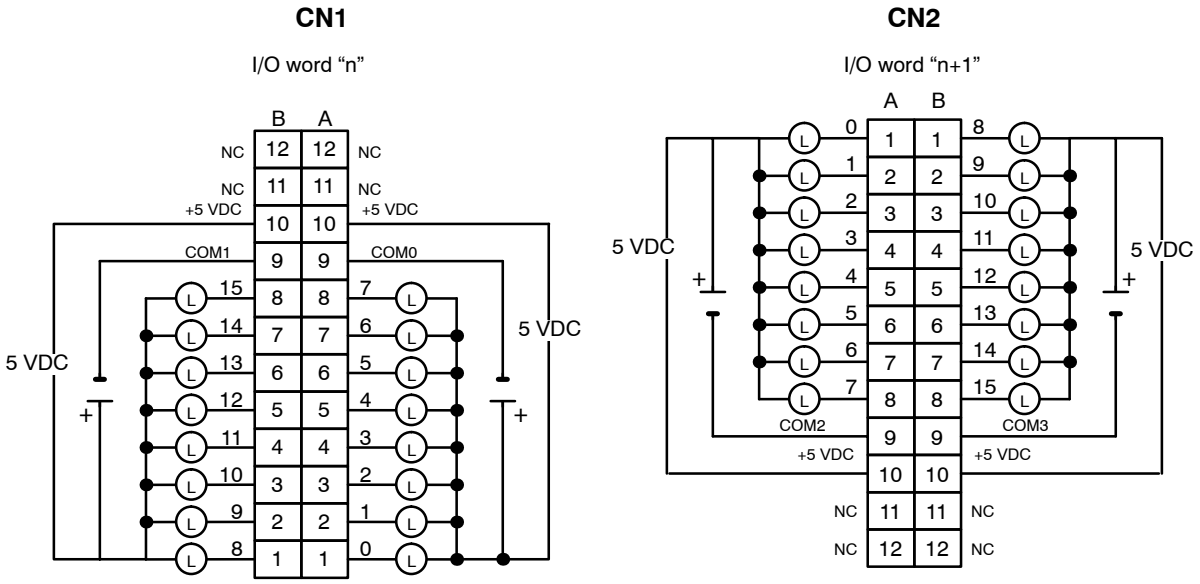

Note 1. I/O word "n" is determined by the unit number setting (n = IR 100 + 10 × unit number).

2. The Unit will have 32 static output points when pin 1 of it's DIP switch is OFF.

3. The outputs are negative logic outputs; when there is an output, the terminal has an "L" voltage level. Each output terminal has an output resistance of 4.7 kΩ.

TTL Output Unit C200H-OD501 (Used as 128-point Dynamic Output Unit)

Max. Switching Capacity	5 VDC 35 mA (280 mA/common, 1.12 A/Unit; output resistance 4.7 kΩ)
Min. Switching Capacity	None
Leakage Current	0.1 mA max.
Residual Voltage	0.4 V max.
ON Response Time	0.2 ms max.
OFF Response Time	0.3 ms max.
No. of Circuits	2 (dynamic, 64 points/circuit)
Internal Current Consumption	220 mA 5 VDC max.
Fuses	4 (1 fuse/common; fuses are not user-replacable.)
Power for External Supply	39 mA 5 VDC min. (1.2 mA × no. of outputs ON)
Weight	300 g max.
Dimensions	130×34.5×100.5 (H×W×D, in millimeters)

Circuit Configuration

Units manufactured on or before November 13, 2002
(manufacturing numbers 13Y2 or earlier)

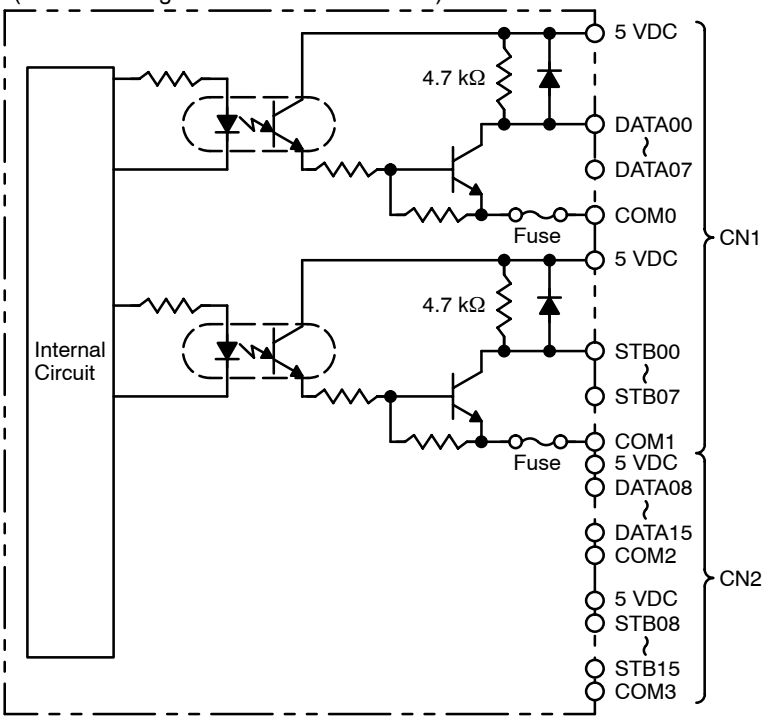

Units manufactured on or after November 14, 2002
(manufacturing numbers 14Y2H or later)

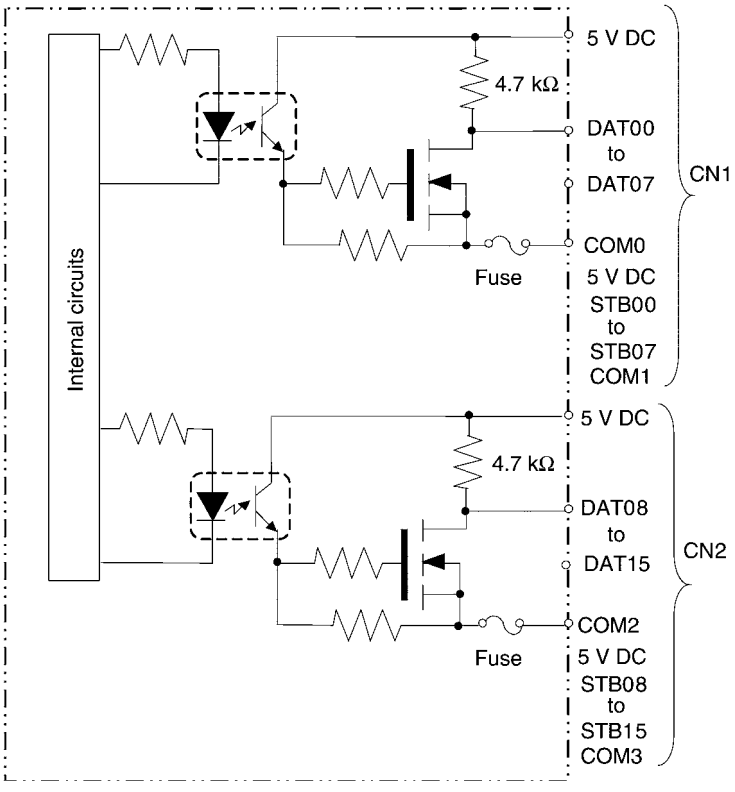

Terminal Connections

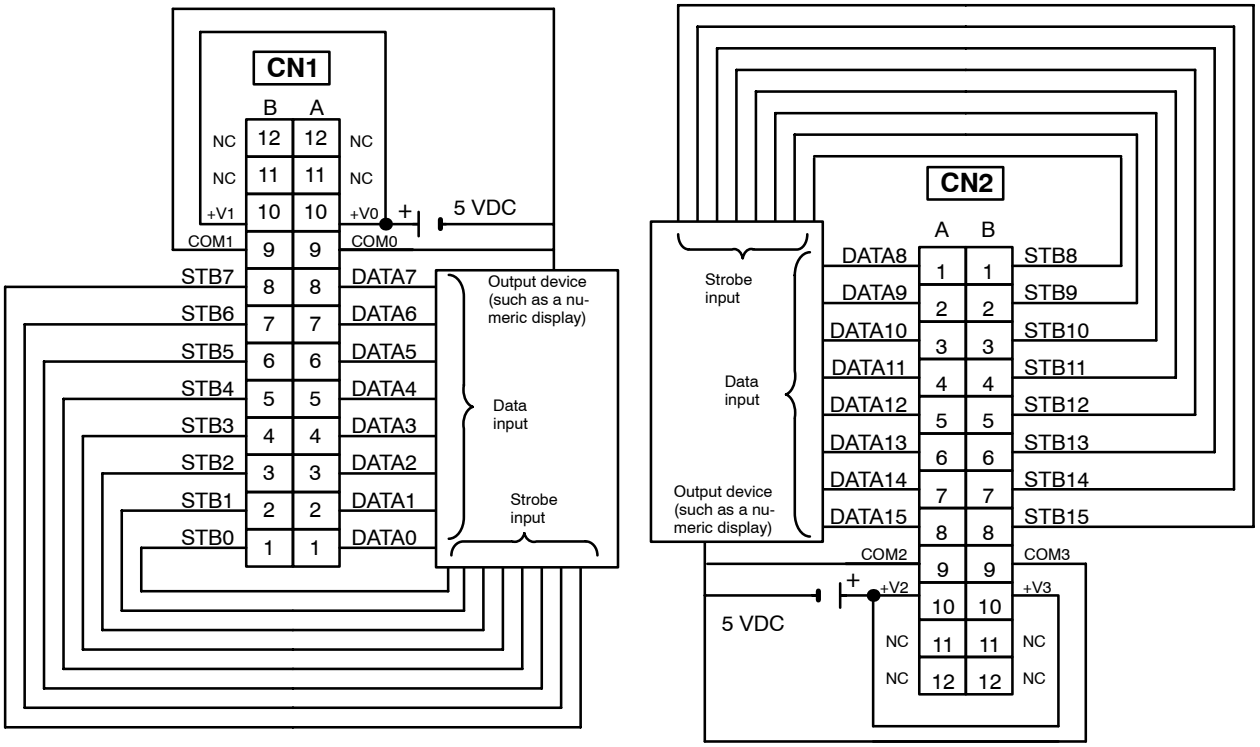

Note 1. Refer to the Unit's *Operation Manual* for details on I/O bit allocation.

2. The Unit will have 128 dynamic output points when pin 1 of it's DIP switch is ON.
3. Set pin 5 of the Unit's DIP switch ON for positive logic outputs, or OFF for negative logic outputs. When set for negative logic outputs, the terminal has an "L" voltage level when there is an output. When set for positive logic outputs, the terminal has an "H" voltage level when there is an output.
4. The strobe signal has negative logic regardless of the setting of pin 5.
5. Each output terminal has an output resistance of 4.7 kΩ.

Transistor Output Unit C200H-OD215 (Used as 32-point Output Unit)

Max. Switching Capacity	16 mA, 4.5 VDC to 100 mA, 26.4 VDC 800 mA/common, 3.2 A/Unit
Min. Switching Capacity	None
Leakage Current	0.1 mA max.
Residual Voltage	0.7 V max.
ON Response Time	0.2 ms max.
OFF Response Time	0.6 ms max.
No. of Circuits	4 (8 points/common)
Internal Current Consumption	220 mA 5 VDC max.
Fuses	4 (1 fuse/common; fuses are not user-replacable.)
Power for External Supply	90 mA 5 to 24 VDC±10% min. (2.8 mA × number of ON outputs)
Weight	300 g max.
Dimensions	130×34.5×100.5 (H×W×D, in millimeters)

Circuit Configuration

Units manufactured on or before November 29, 1999 (manufacturing numbers 29Y9 or earlier*)

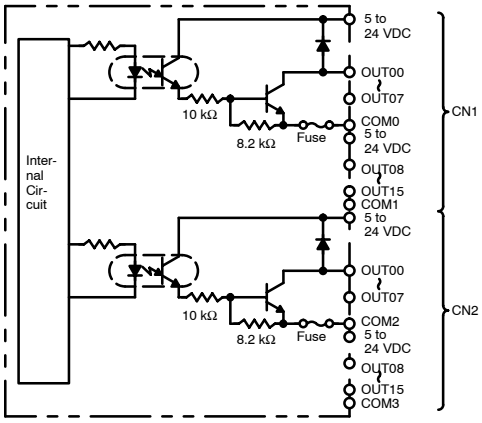

Units manufactured between November 30, 1999 and October 9, 2002 (manufacturing numbers 30Y9 to 09X2)

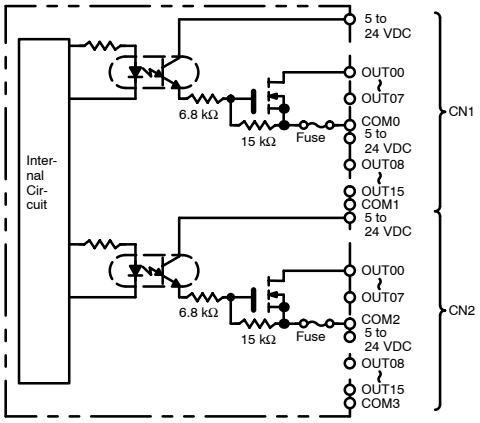

Units manufactured on or after October 10, 2002 (manufacturing numbers 10X2H or later)

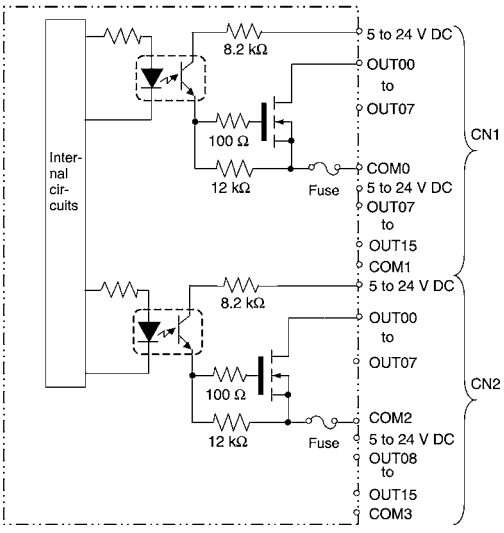

*Manufacturing Numbers

□□Y9□

- Manufacturing plant code (A to Z or blank)
- Year: Last digit of calendar year; e.g., 1999→9, 2000→0
- Month: 1 to 9 (January to September), X (October), Y (November), Z (December)
- Day: 01 to 31

Terminal Connections

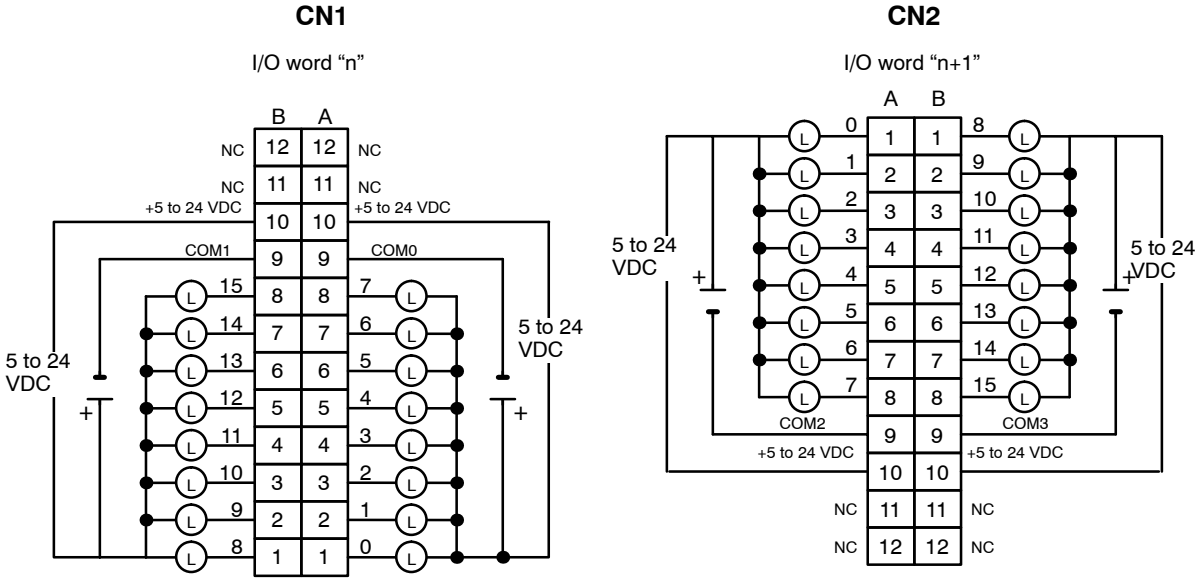

Note 1. I/O word "n" is determined by the unit number setting (n = IR 100 + 10 × unit number).

2. The Unit will have 32 static output points when pin 1 of it's DIP switch is OFF.

3. When wiring output circuits, be sure to use the correct polarity for the external power supplies. Wiring with incorrect polarity may result in erroneous operation of the load.

Transistor Output Unit C200H-OD215 (Used as 128-point Dynamic Output Unit)

Max. Switching Capacity	16 mA, 4.5 VDC to 100 mA, 26.4 VDC 800 mA/common, 3.2 A/Unit
Min. Switching Capacity	None
Leakage Current	0.1 mA max.
Residual Voltage	0.7 V max.
ON Response Time	0.2 ms max.
OFF Response Time	0.6 ms max.
No. of Circuits	2 (dynamic, 64 points/circuit)
Internal Current Consumption	220 mA 5 VDC max.
Fuses	4 (1 fuse/common; fuses are not user-replacable.)
Power for External Supply	90 mA 5 to 24 VDC±10% min. (2.8 mA × number of ON outputs)
Weight	300 g max.
Dimensions	130×34.5×100.5 (H×W×D, in millimeters)

Circuit Configuration

Units manufactured on or before November 29, 1999 (manufacturing numbers 29Y9 or earlier*)

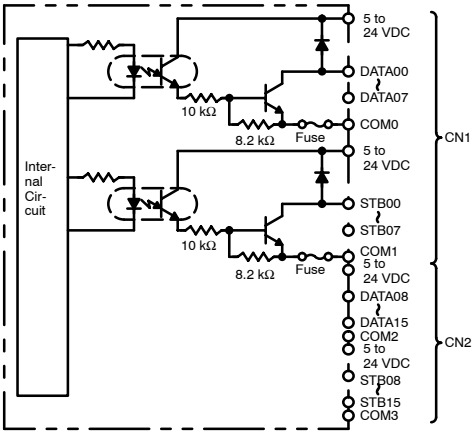

Units manufactured between November 30, 1999 and October 9, 2002 (manufacturing numbers 30Y9 to 09X2)

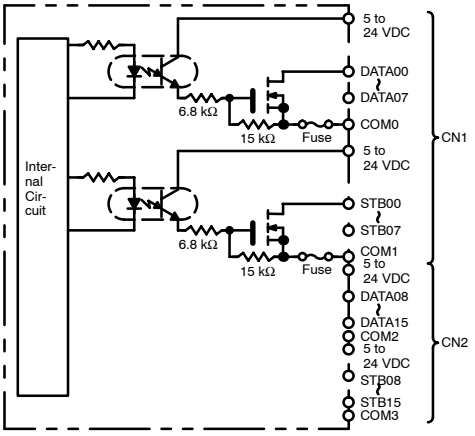

Units manufactured on or after October 10, 2002 (manufacturing numbers 10X2H or later)

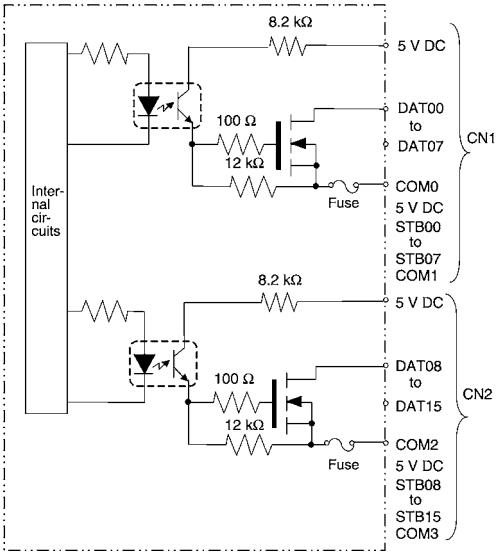

*Manufacturing Numbers

□□Y9□

- Manufacturing plant code (A to Z or blank)
- Year: Last digit of calendar year; e.g., 1999→9, 2000→0
- Month: 1 to 9 (January to September), X (October), Y (November), Z (December)
- Day: 01 to 31

Terminal Connections

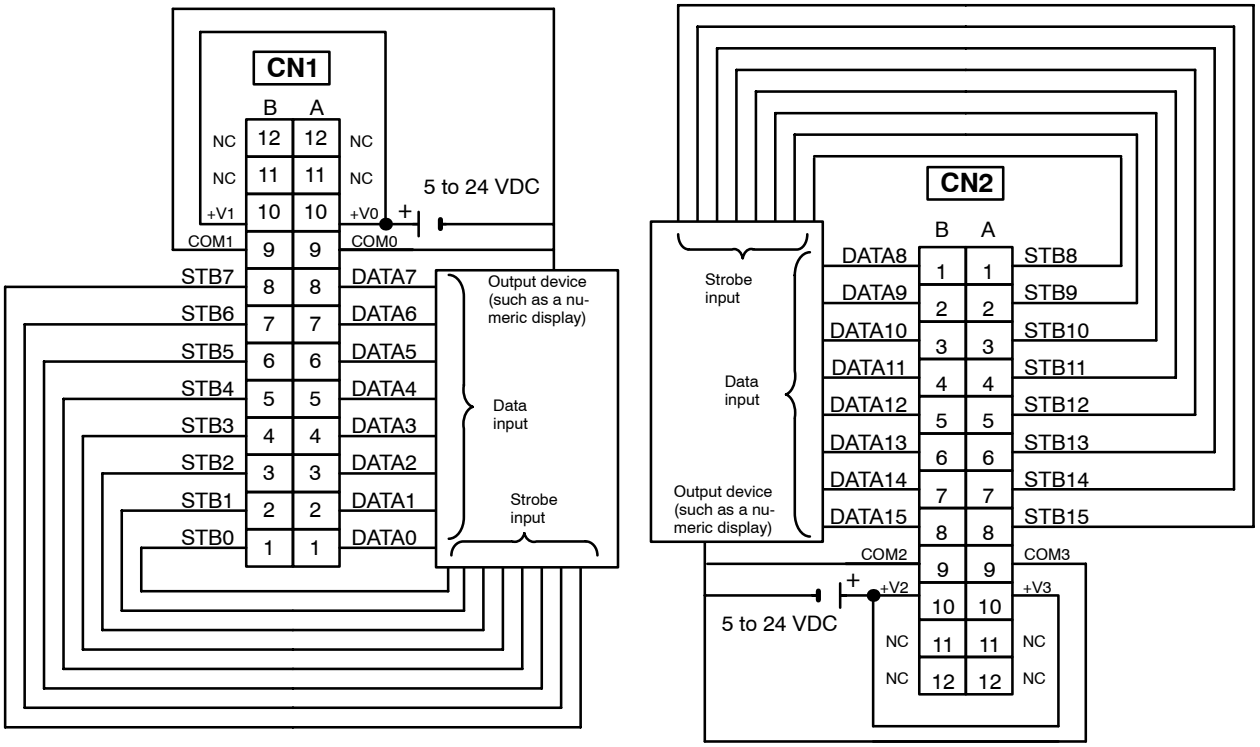

Note 1. Refer to the Unit's *Operation Manual* for details on I/O bit allocation.

2. The Unit will have 128 dynamic output points when pin 1 of it's DIP switch is ON.
3. Set pin 5 of the Unit's DIP switch ON for positive logic outputs, or OFF for negative logic outputs. When set for negative logic outputs, the terminal has an "L" voltage level when there is an output. When set for positive logic outputs, the terminal has an "H" voltage level when there is an output.
4. The strobe signal has negative logic regardless of the setting of pin 5.
5. When the output device (such as a numeric display) does not have a pull-up resistor, it is necessary to add a pull-up resistor between the + terminal of the power supply and each data (0 to 15) and strobe (0 to 15) terminal.
6. When wiring output circuits, be sure to use the correct polarity for the external power supplies. Wiring with incorrect polarity may result in erroneous operation of the load.

High-density I/O Unit Limitations

Limitations on the switching capacity of C200H-OD215/MD115/MD215 Transistor Output Units and the usable number of I/O points in the C200H-ID215 and C200H-MD215 are shown below.

Switching Capacity

The switching capacity of C200H-OD215/MD115/MD215 Transistor Output Units depends on the power supply voltage, as shown below.

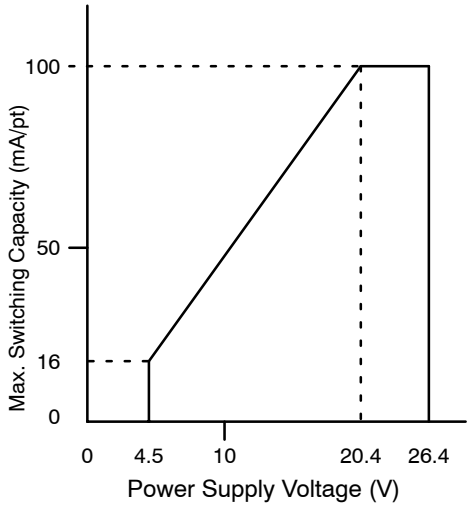

TTL I/O Unit C200H-MD501 (Used as I/O Unit with 16 Inputs and 16 Outputs)

Output Specifications (Connector 1)

Max. Switching Capacity	5 VDC 35 mA (280 mA/common, 560 mA/Unit; output resistance 4.7 kΩ)
Min. Switching Capacity	None
Leakage Current	0.1 mA max.
Residual Voltage	0.4 V max.
ON Response Time	0.2 ms max.
OFF Response Time	0.3 ms max.
No. of Circuits	2 (8 points/common)
Fuses	2 (1 fuse/common; fuses are not user-replacable.)
Power for External Supply	20 mA 5 VDC min. (1.2 mA × no. of outputs ON)

Input Specifications (Connector 2)

Rated Input Voltage	5 VDC
Operating Input Voltage	4.5 to 5.5 VDC
Input Impedance	1.1 kΩ
Input Current	3.5 mA (at 5 VDC)
ON Voltage	3.0 VDC min.
OFF Voltage	1.0 VDC max.
ON Response Time	2.5 ms/15 ms max. (switchable)
OFF Response Time	2.5 ms/15 ms max. (switchable)
No. of Circuits	2 (8 points/common)
High-speed Inputs	8 points (connector 2 terminals 8 to 15, when set) Pulse width: 1 ms/4 ms min. (switchable)

General Specifications

Internal Current Consumption	180 mA 5 VDC max.
Weight	300 g max.
Dimensions	130×34.5×100.5 (H×W×D, in millimeters)

Circuit Configuration

Units manufactured on or before November 21, 2002
(manufacturing numbers 21Y2 or earlier)

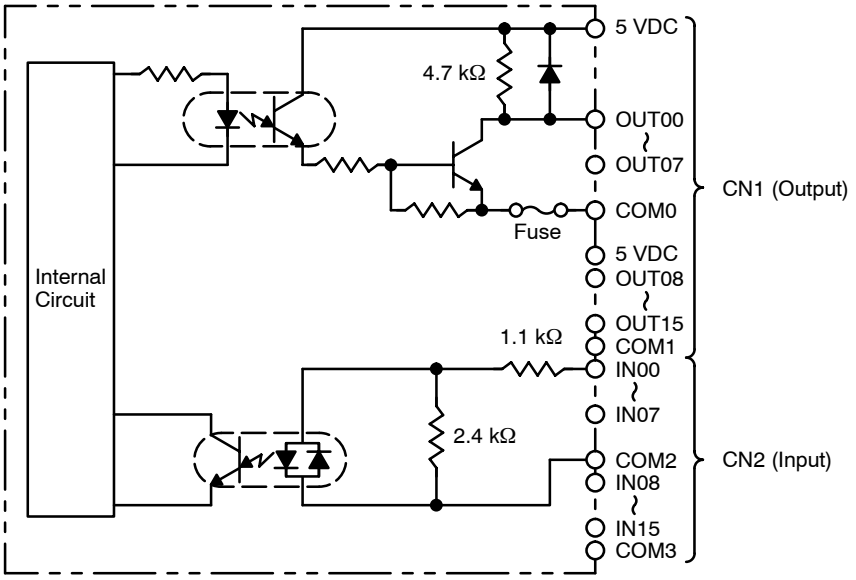

Units manufactured on or after November 22, 2002
(manufacturing numbers 22Y2H or later)

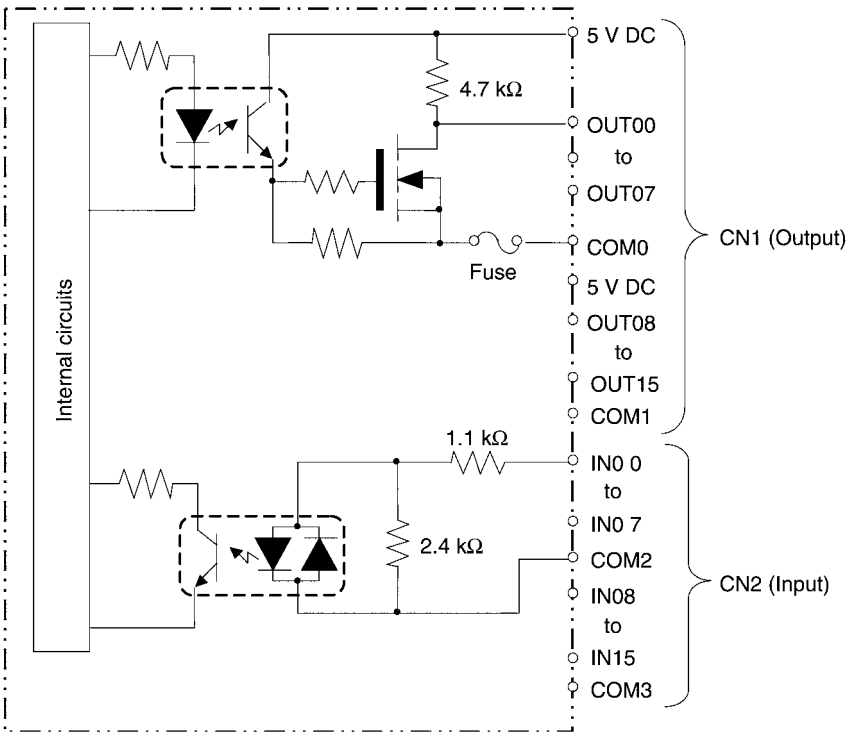

Terminal Connections

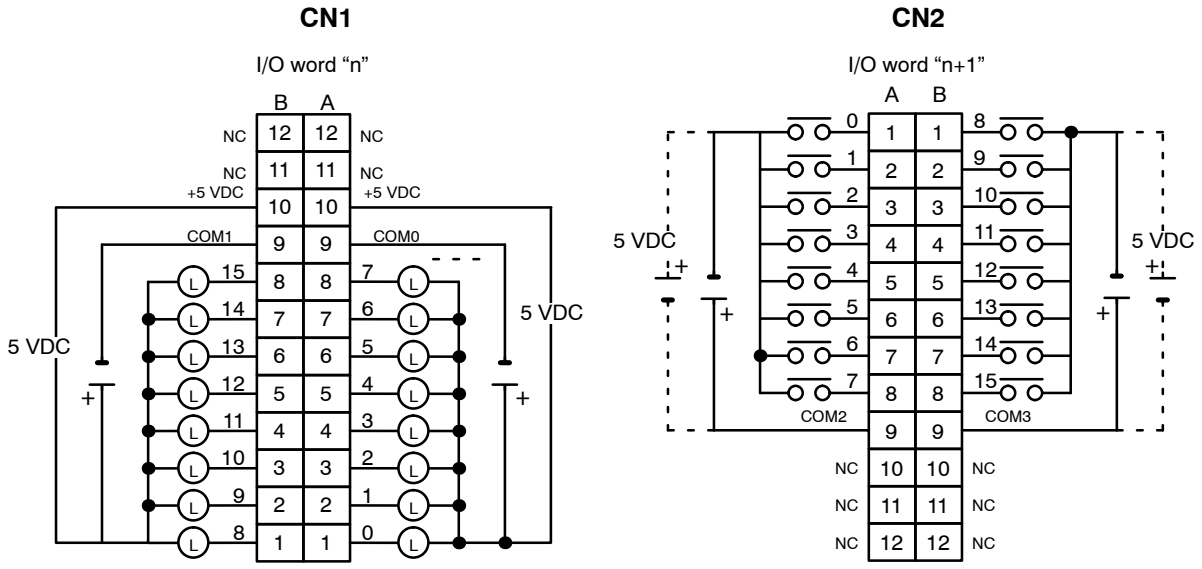

Note 1. I/O word "n" is determined by the unit number setting (n = IR 100 + 10 × unit number).
2. The Unit will have 16 static output and16 static input points when pin 1 of it's DIP switch is OFF.
3. When pin 2 of the Unit's DIP switch is ON, input points 08 to 15 in connector 2 are high-speed inputs.
4. The outputs are negative logic outputs; when there is an output, the terminal has an "L" voltage level. Each output terminal has an output resistance of 4.7 kΩ.
5. The user is not authorized to change the fuse.

TTL I/O Unit C200H-MD501 (Used as 128-point Dynamic Input Unit)

Output Specifications (Connector 1)

Max. Switching Capacity	5 VDC 35 mA (280 mA/common, 560 mA/Unit; output resistance 4.7 kΩ)
Min. Switching Capacity	None
Leakage Current	0.1 mA max.
Residual Voltage	0.4 V max.
ON Response Time	0.2 ms max.
OFF Response Time	0.3 ms max.
Fuses	2 (1 fuse/common; fuses are not user-replacable.)
Power for External Supply	20 mA 5 VDC min. (1.2 mA × no. of outputs ON)

Input Specifications (Connector 2)

Rated Input Voltage	5 VDC
Operating Input Voltage	4.5 to 5.5 VDC
Input Impedance	1.1 kΩ
Input Current	3.5 mA (at 5 VDC)
ON Voltage	3.0 VDC min.
OFF Voltage	1.0 VDC max.

General Specifications

No. of Circuits	2 (dynamic, 64 points/circuit)
Internal Current Consumption	180 mA 5 VDC max.
Weight	300 g max.
Dimensions	130×34.5×100.5 (H×W×D, in millimeters)

Circuit Configuration

Units manufactured on or before November 21, 2002
(manufacturing numbers 21Y2 or earlier)

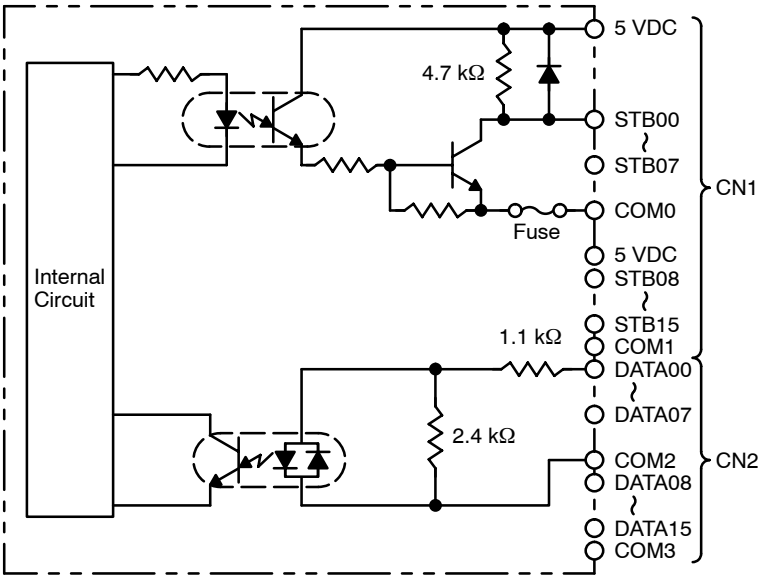

Units manufactured on or after November 22, 2002
(manufacturing numbers 22Y2H or later)

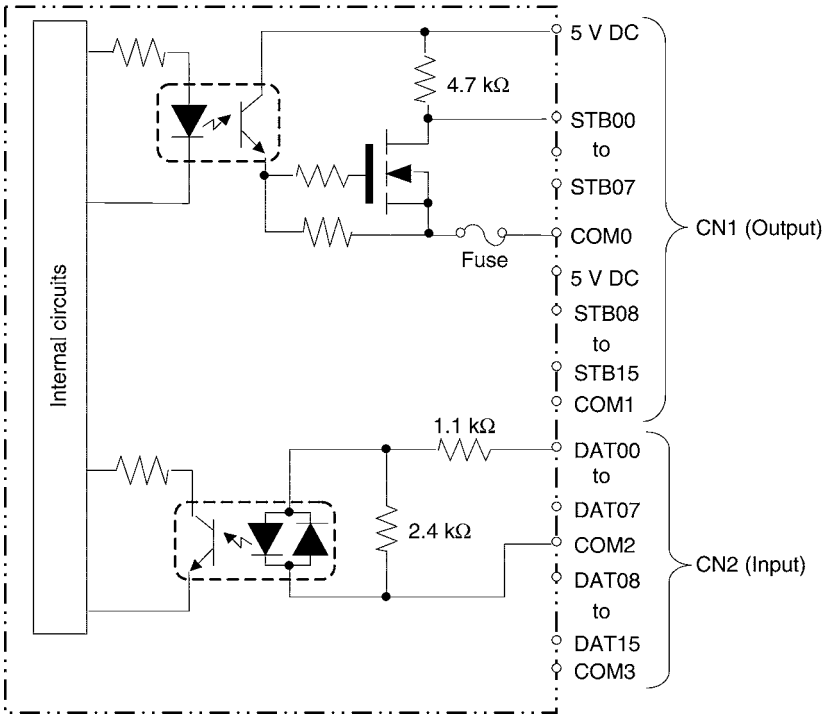

Terminal Connections

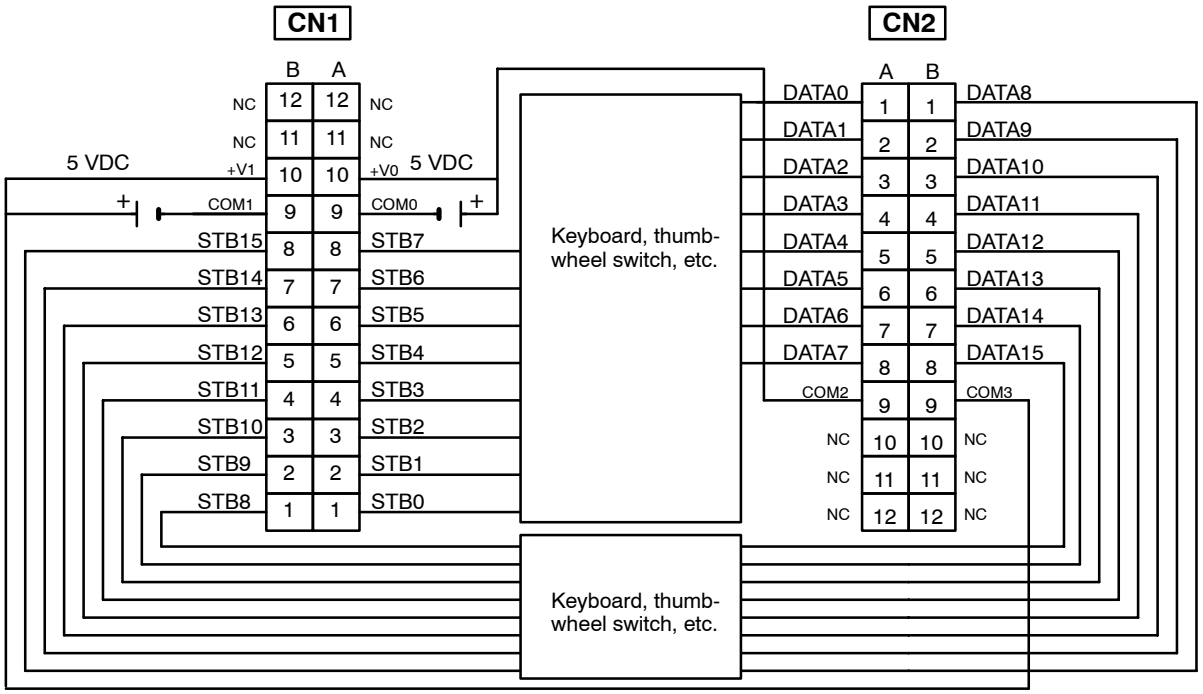

Note 1. Refer to the Unit's *Operation Manual* for details on I/O bit allocation.

2. The Unit will have 128 dynamic output points when pin 1 of it's DIP switch is ON.

3. Each output terminal has an output resistance of 4.7 kΩ.

12 VDC Input/Transistor Output Unit C200H-MD115 (Used as I/O Unit with 16 Inputs and 16 Outputs)

Output Specifications (Connector 1)

Max. Switching Capacity	16 mA, 4.5 VDC to 100 mA, 26.4 VDC 800 mA/common, 1.6 A/Unit
Min. Switching Capacity	None
Leakage Current	0.1 mA max.
Residual Voltage	0.7 V max.
ON Response Time	0.2 ms max.
OFF Response Time	0.6 ms max.
No. of Circuits	2 (8 points/common)
Fuses	2 (1 fuse/common; fuses are not user-replacable.)
Power for External Supply	45 mA 5 to 24 VDC±10% min. (2.8 mA × number of ON outputs)

Input Specifications (Connector 2)

Rated Input Voltage	12 VDC $^{+10\%}/_{-15\%}$
Operating Input Voltage	10.2 to 13.2 VDC
Input Impedance	2.7 kΩ
Input Current	4.1 mA (at 12 VDC)
ON Voltage	8.0 VDC min.
OFF Voltage	3.0 VDC max.
ON Response Time	2.5 ms/15 ms max. (switchable)
OFF Response Time	2.5 ms/15 ms max. (switchable)
No. of Circuits	2 (8 points/common)
High-speed Inputs	8 points (connector 2 terminals 8 to 15, when set) Pulse width: 1 ms/4 ms min. (switchable)

General Specifications

Internal Current Consumption	180 mA 5 VDC max.
Weight	300 g max.
Dimensions	130×34.5×100.5 (H×W×D, in millimeters)

Circuit Configuration

Units manufactured on or before November 17, 2002
(manufacturing numbers 17Y2 or earlier)

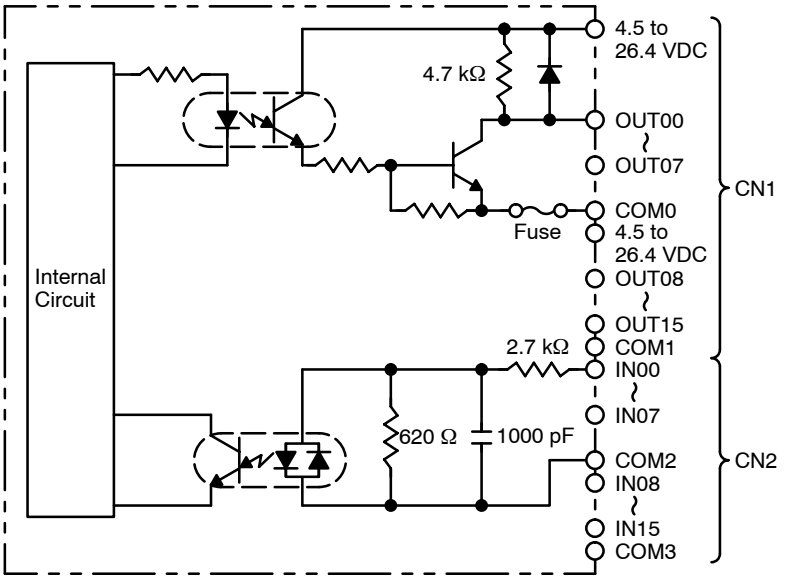

Units manufactured on or after November 18, 2002
(manufacturing numbers 18Y2H or later)

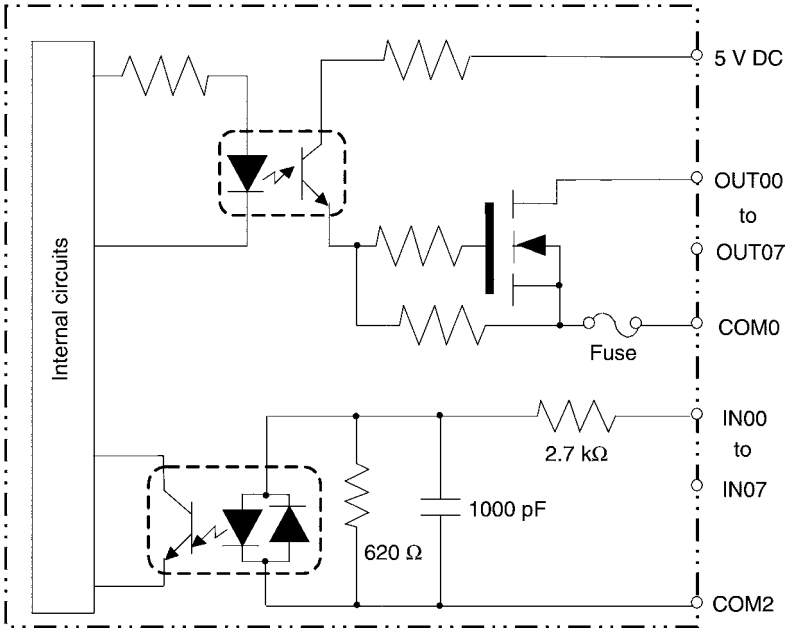

Terminal Connections

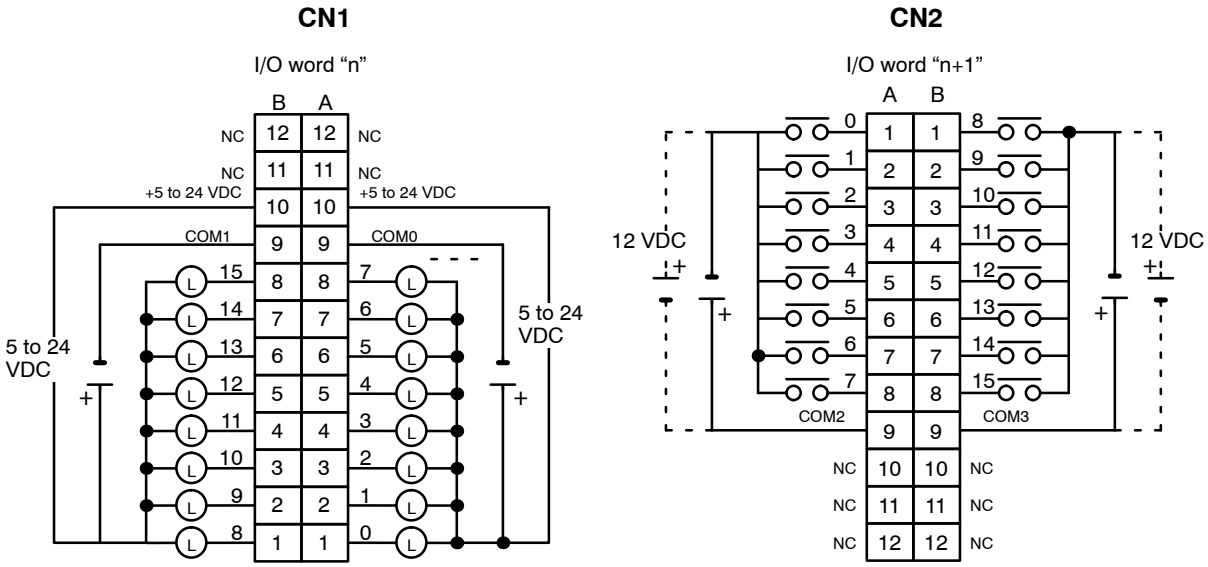

Note 1. I/O word "n" is determined by the unit number setting (n = IR 100 + 10 × unit number).
2. The Unit will have 16 static output and16 static input points when pin 1 of it's DIP switch is OFF.
3. When pin 2 of the Unit's DIP switch is ON, input points 08 to 15 in connector 2 are high-speed inputs.

12 VDC Input/Transistor Output Unit C200H-MD115 (Used as 128-point Dynamic Input Unit)

Output Specifications (Connector 1)

Max. Switching Capacity	50 mA 12 VDC, 400 mA/common, 0.8 A/Unit
Min. Switching Capacity	None
Leakage Current	0.1 mA max.
Residual Voltage	0.7 V max.
ON Response Time	0.2 ms max.
OFF Response Time	0.6 ms max.
Fuses	2 (1 fuse/common; fuses are not user-replacable.)
Power for External Supply	45 mA 5 to 24 VDC±10% min. (2.8 mA × number of ON outputs)

Input Specifications (Connector 2)

Rated Input Voltage	12 VDC
Operating Input Voltage	10.2 to 13.2 VDC
Input Impedance	2.7 kΩ
Input Current	4.1 mA (at 12 VDC)
ON Voltage	8.0 VDC min.
OFF Voltage	3.0 VDC max.

General Specifications

No. of Circuits	2 (dynamic, 64 points/circuit)
Internal Current Consumption	180 mA 5 VDC max.
Weight	300 g max.
Dimensions	130×34.5×100.5 (H×W×D, in millimeters)

Circuit Configuration

Units manufactured on or before November 17, 2002
(manufacturing numbers 17Y2 or earlier)

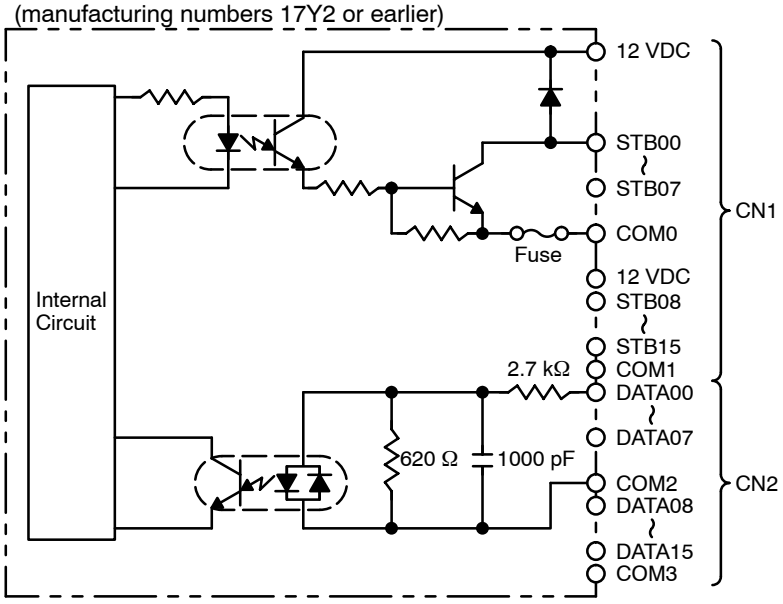

Units manufactured on or after November 18, 2002
(manufacturing numbers 18Y2H or later)

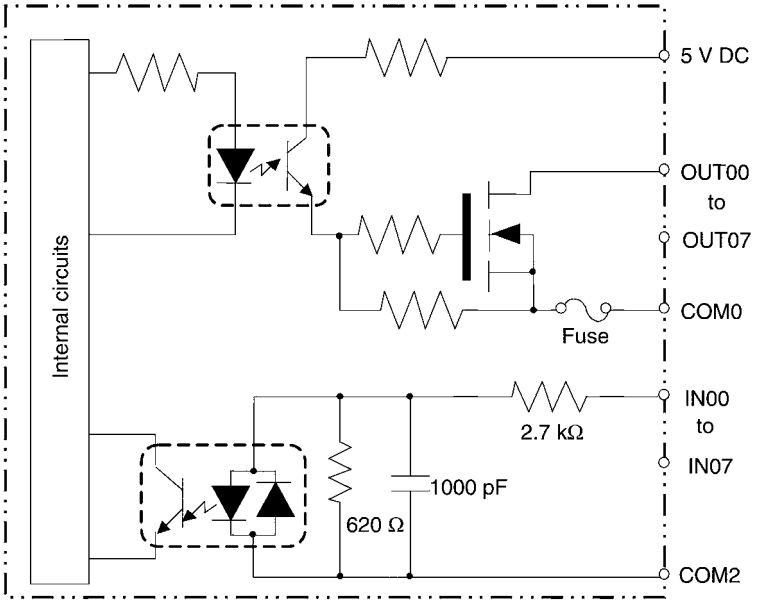

Terminal Connections

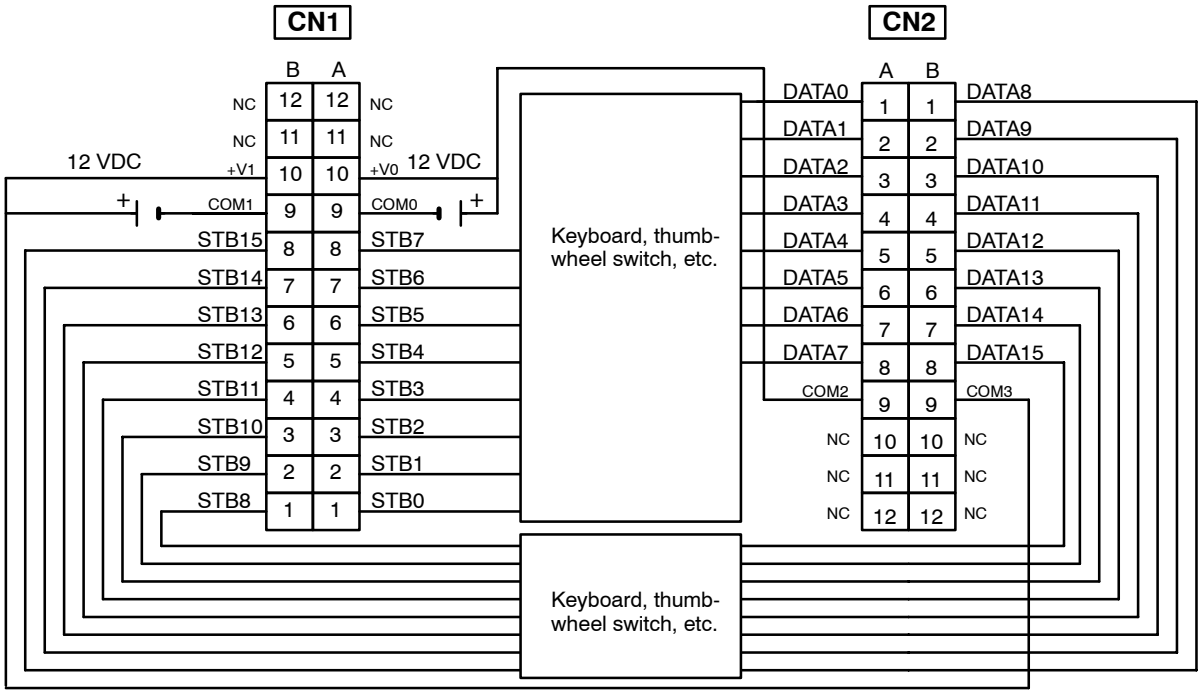

Note 1. Refer to the Unit's *Operation Manual* for details on I/O bit allocation.
2. The Unit will have 128 dynamic output points when pin 1 of it's DIP switch is ON.

24 VDC Input/Transistor Output Unit C200H-MD215 (Used as I/O Unit with 16 Inputs and 16 Outputs)

Output Specifications (Connector 1)

Max. Switching Capacity	16 mA, 4.5 VDC to 100 mA, 26.4 VDC 800 mA/common, 1.6 A/Unit
Min. Switching Capacity	None
Leakage Current	0.1 mA max.
Residual Voltage	0.7 V max.
ON Response Time	0.2 ms max.
OFF Response Time	0.6 ms max.
No. of Circuits	2 (8 points/common)
Fuses	2 (1 fuse/common; fuses are not user-replacable.)
Power for External Supply	45 mA 5 to 24 VDC±10% min. (2.8 mA × number of ON outputs)

Input Specifications (Connector 2)

Rated Input Voltage	24 VDC
Operating Input Voltage	20.4 to 26.4 VDC
Input Impedance	5.6 kΩ
Input Current	4.1 mA (at 24 VDC)
ON Voltage	14.4 VDC min.
OFF Voltage	5.0 VDC max.
ON Response Time	2.5 ms/15 ms max. (switchable)
OFF Response Time	2.5 ms/15 ms max. (switchable)
No. of Circuits	2 (8 points/common)
High-speed Inputs	8 points (connector 2 terminals 8 to 15, when set) Pulse width: 1 ms/4 ms min. (switchable)

General Specifications

Internal Current Consumption	180 mA 5 VDC max.
Weight	300 g max.
Dimensions	130×34.5×100.5 (H×W×D, in millimeters)

Circuit Configuration

Units manufactured on or before November 29, 1999 (manufacturing numbers 29Y9 or earlier*)

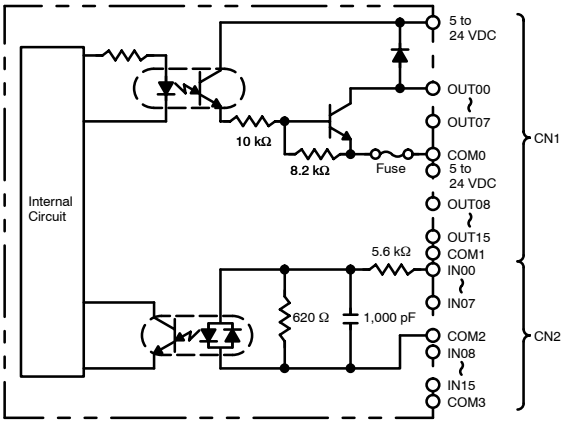

Units manufactured between November 30, 1999 and October 9, 2002 (manufacturing numbers 30Y9 to 09X2)

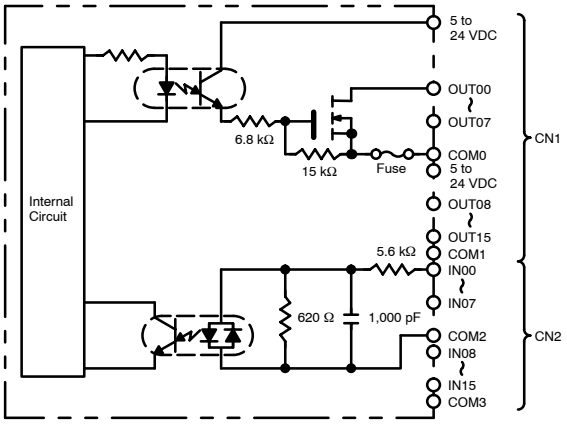

Units manufactured on or after October 10, 2002 (manufacturing nuumbers 10X2H or later)

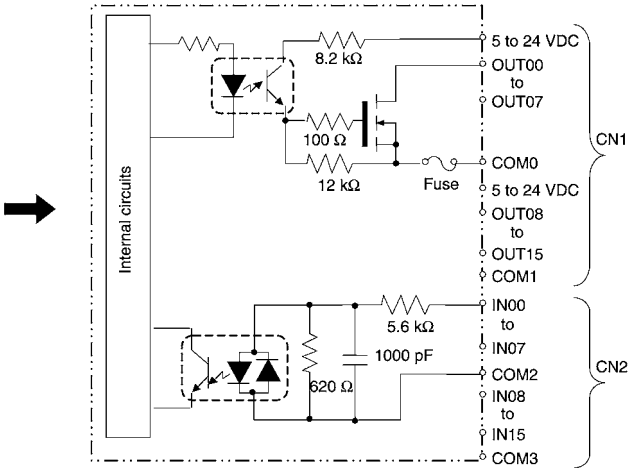

*Manufacturing Numbers

□□Y9□

- Manufacturing plant code (A to Z or blank)
- Year: Last digit of calendar year; e.g., 1999→9, 2000→0
- Month: 1 to 9 (January to September), X (October), Y (November), Z (December)
- Day: 01 to 31

Terminal Connections

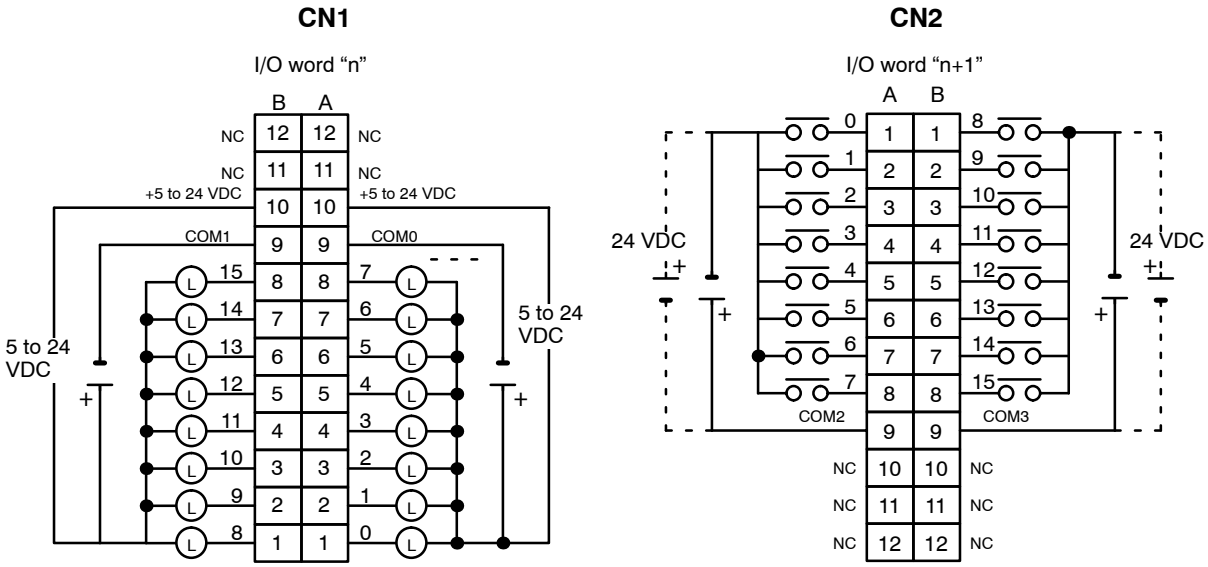

Note 1. I/O word "n" is determined by the unit number setting (n = IR 100 + 10 × unit number).

2. The Unit will have 16 static output and16 static input points when pin 1 of it's DIP switch is OFF.

3. At high temperatures, the number of inputs that can be turned ON simultaneously is limited. Refer to the graph on page 195 for details.

4. When pin 2 of the Unit's DIP switch is ON, input points 08 to 15 in connector 2 are high-speed inputs.

5. When wiring output circuits, be sure to use the correct polarity for the external power supplies. Wiring with incorrect polarity may result in erroneous operation of the load.

24 VDC Input/Transistor Output Unit C200H-MD215 (Used as 128-point Dynamic Input Unit)

Output Specifications (Connector 1)

Max. Switching Capacity	100 mA 24 VDC, 800 mA/common, 1.6 A/Unit
Min. Switching Capacity	None
Leakage Current	0.1 mA max.
Residual Voltage	0.7 V max.
ON Response Time	0.2 ms max.
OFF Response Time	0.6 ms max.
Fuses	2 (1 fuse/common; fuses are not user-replacable.)
Power for External Supply	45 mA 5 to 24 VDC±10% min. (2.8 mA × number of ON outputs)

Input Specifications (Connector 2)

Rated Input Voltage	24 VDC
Operating Input Voltage	20.4 to 26.4 VDC
Input Impedance	5.6 kΩ
Input Current	4.1 mA (at 24 VDC)
ON Voltage	14.4 VDC min.
OFF Voltage	5.0 VDC max.

General Specifications

No. of Circuits	2 (dynamic, 64 points/circuit)
Internal Current Consumption	180 mA 5 VDC max.
Weight	300 g max.
Dimensions	130×34.5×100.5 (H×W×D, in millimeters)

Circuit Configuration

Units manufactured on or before November 29, 1999 (manufacturing numbers 29Y9 or earlier*)

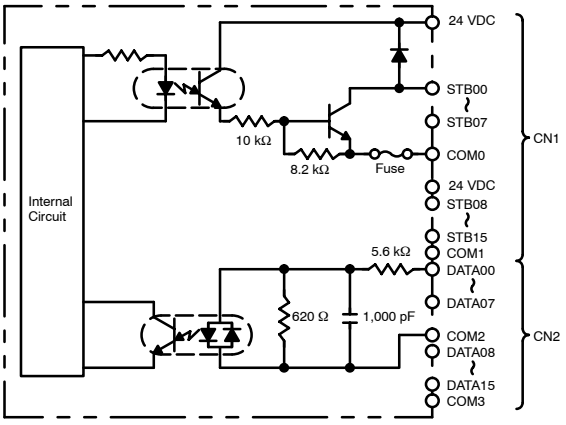

Units manufactured between November 30, 1999 and October 9, 2002 (manufacturing numbers 30Y9 to 09X2)

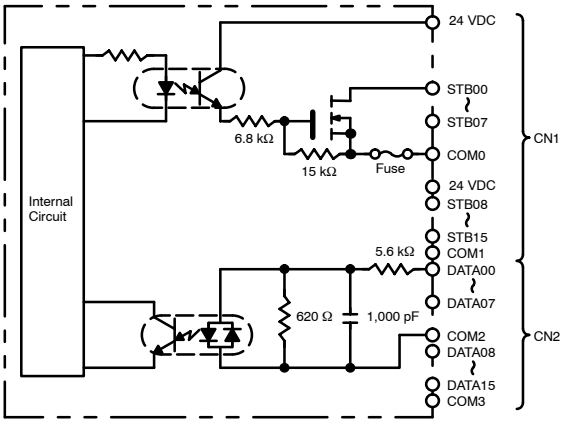

Units manufactured on or after October 10, 2002 (manufacturing numbers 10X2H or later)

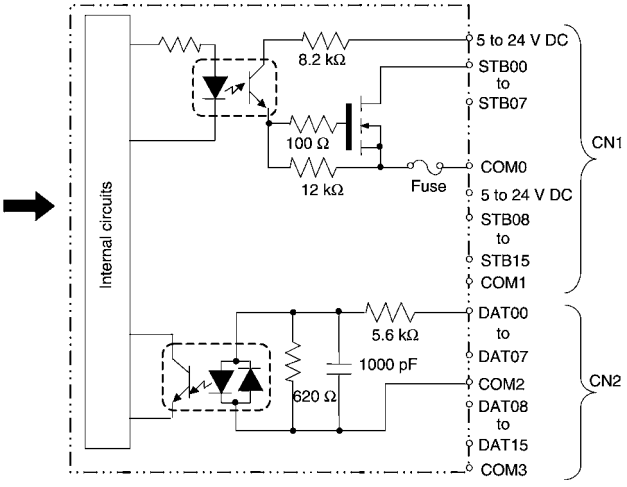

*Manufacturing Numbers

□□Y9□

- Manufacturing plant code (A to Z or blank)
- Year: Last digit of calendar year; e.g., 1999→9, 2000→0
- Month: 1 to 9 (January to September), X (October), Y (November), Z (December)
- Day: 01 to 31

Terminal Connections

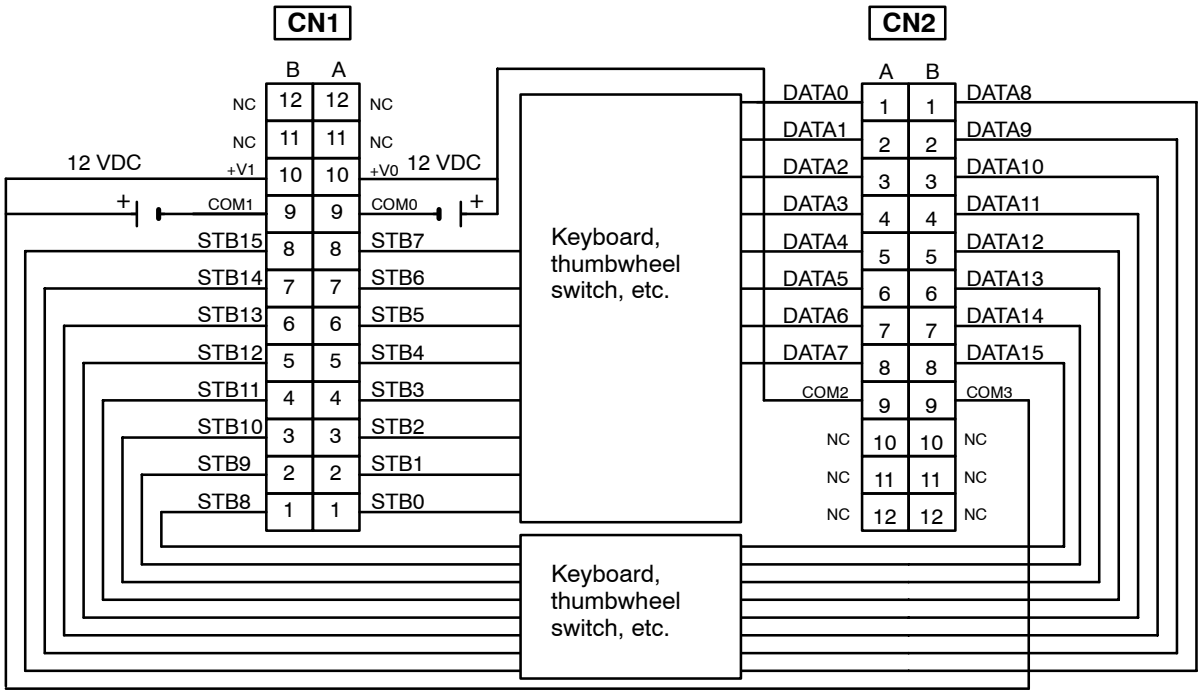

Note
1. Refer to the Unit's *Operation Manual* for details on I/O bit allocation.
2. The Unit will have 128 dynamic output points when pin 1 of it's DIP switch is ON.
3. Each output terminal has an output resistance of 4.7 kΩ.
4. At high temperatures, the number of inputs that can be turned ON simultaneously is limited. Refer to the graph on the next page for details.
5. The user is not authorized to change the fuse.
6. When wiring output circuits, be sure to use the correct polarity for the external power supplies. Wiring with incorrect polarity may result in erroneous operation of the load.

High-density I/O Unit Limitations

Limitations on the switching capacity of C200H-OD215/MD115/MD215 Transistor Output Units and the usable number of I/O points in the C200H-ID215 and C200H-MD215 are shown below.

Switching Capacity

The switching capacity of C200H-OD215/MD115/MD215 Transistor Output Units depends on the power supply voltage, as shown below.

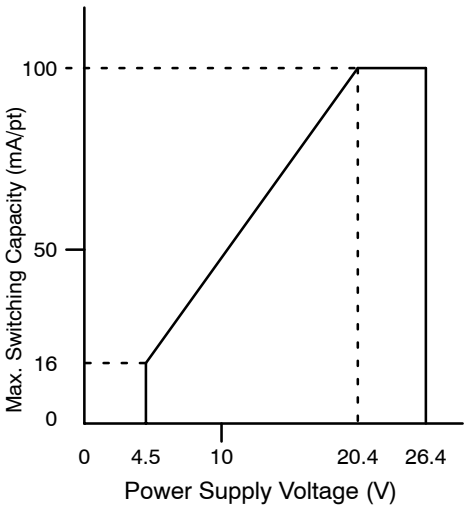

Usable I/O Points (C200H-MD215)

To prevent overheating in the C200H-MD215 and prevent early failure of internal components, limit the number of input points ON simultaneously. The number of points that can be on simultaneously depends on both the temperature and the input voltage. (There is no limit to the number of output points that can be ON simultaneously.)

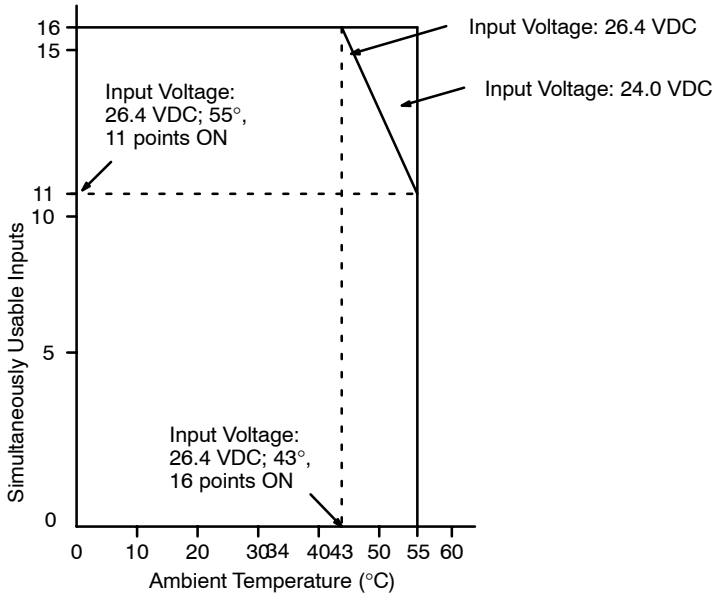

Note If the Unit is at room temperature it takes about 10 minutes for excessive heat to build up when all inputs are turned ON, so all inputs can be turned ON simultaneously for testing.

C200HS-INT01 Interrupt Input Unit

The Interrupt Input Unit temporarily interrupts the main program by means of inputs, and executes interrupt subroutines. It must be mounted to a C200HX/C200HG/C200HE CPU Rack, and a maximum of two Interrupt Input Units can be mounted on the Rack. (It is possible to mount it to an Expansion I/O Rack, but in that case it will be treated as a Standard Input Unit and will have no interrupt functions.) Use a C200HW-BC□□1 Backplane. The word number of the slot position to which the Unit is mounted is allocated as eight input points.

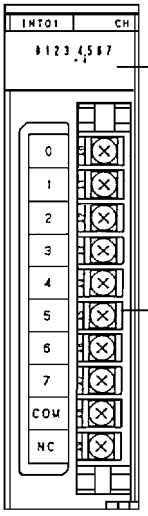

Operation display area:
Displays the ON/OFF status of interrupts.

Terminal block:
Consists of removable components.

Rated Input Voltage	12 to 24 VDC $^{+10\%}/_{-15\%}$
Input Impedance	2 KΩ
Input Current	10 mA typical (24 VDC)
ON Voltage	10.2 VDC min.
OFF Voltage	3.0 VDC max.
ON Response Time	0.2 ms max.
OFF Response Time	0.5 ms max.
No. of Circuits	1 (8 points/common)
Internal Current Consumption	20 mA, 5 VDC max.
Weight	200 g max.

Circuit Configuration

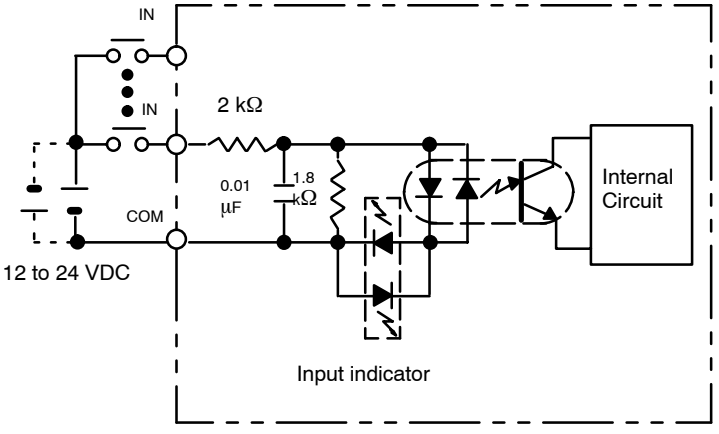

Either plus or minus can be used for the input power supply.

Terminal Connections

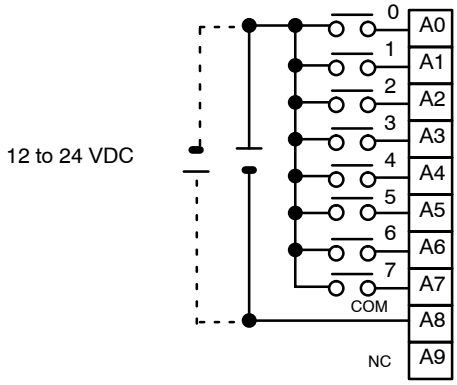

Analog Timer Unit C200H-TM001

Item	Specifications
Oscillation Method	CR oscillation
Time Setting Range	Use the DIP switch to set any of the following four ranges, according to the chart shown on the next page. 0.1 to 1 second (typical) 1 to 10 seconds (typical) 10 to 60 seconds (typical) 1 to 10 minutes (typical)
Timer Pause Function	The timing operation can be paused if so specified by the program. Therefore, the timers can also be used as cumulative registers.
Number of Timer Points	4
Indicators	SET and TIME UP
External Variable Resistor	External variable resistors can be used to set the time value when the IN/EXT selector is set to OFF (EXT). Use 20 kΩ variable resistors.
Bit Allocation	The word is determined by the system configuration. Bit / Function 00 T0 start output 01 T1 start output 02 T2 start output 03 T3 start output → "1" when time is running 04 T0 pause output 05 T1 pause output 06 T2 pause output 07 T3 pause output → 0 Operates; 1 Stops 08 T0 time-up input 09 T1 time-up input 10 T2 time-up input 11 T3 time-up input → "1" when time is up 12, 13, 14, 15 Cannot be used
Programming and Timing Chart	Timer start input Timer setting (word n bits 00 through 03) word n bits 08 through 11 Time-up output Time-up flag Timer start input Time-up output Timer set value
Internal Current Consumption	60 mA 5 VDC max.

Internal variable resistors
These variable resistors are used to set the timers. The settings of these resistors are effective only when the corresponding IN/EXT selector is ON. To set or adjust the time, use the screwdriver supplied with the Unit. Turn the variable resistor clockwise to increase the time value. The numbers 0 through 3 correspond to T0 through T3, respectively.

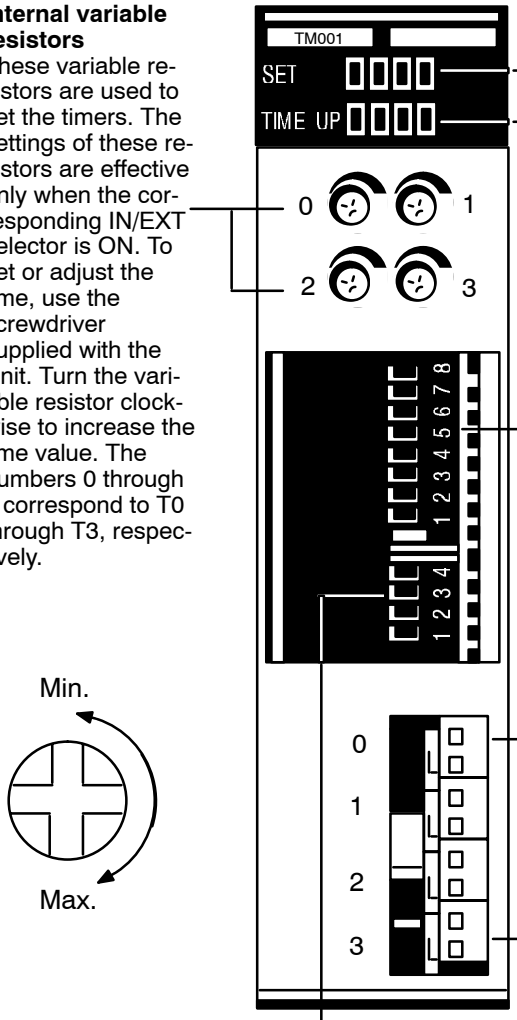

Indicators
The SET indicators in the top row light when the corresponding timer is operating. The TIME UP indicators in the bottom row light when the corresponding timer (T0 through T3) turns ON.

Time range setting

External variable resistor connectors
External variable resistors can also be used to set the timers. The IN/EXT selector pin must be set to the OFF position. Numbers 0 through 3 correspond to T0 through T3, respectively. Use 20-kΩ variable resistors and AWG 22 to 28 lead wires. The connector has solderless terminals and must be wired as shown below.

IN/EXT selectors
When the internal variable resistor is used, set the corresponding pin to ON; when an external variable resistor is used, set the corresponding pin to OFF. Pin numbers 4 through 1 correspond to T0 through T3, respectively.

Timers	Pin	0.1 to 1 s	0.1 to 10 s	10 to 60 s	1 to 10 m
T0	8	0	1	0	1
	7	0	0	1	1
T1	6	0	1	0	1
	5	0	0	1	1
T2	4	0	1	0	1
	3	0	0	1	1
T3	2	0	1	0	1
	1	0	0	1	1

(0: OFF 1: ON)

Use the following Connector.

Name	Model	Manufacturer
Connector	IL-2S-S3L(N)	Japan Aviation Electronics Industry, Ltd.
Contacts	IL-C2-1-10000	

Note 1. Use lead wires that are AWG28 to AWG22.
2. Crimp contact wiring is used.

Wire as shown below.

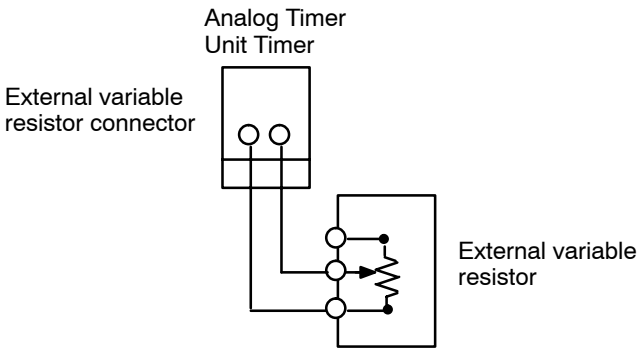

⚠ **Caution** Ensure that the external variable resistor connectors are open when using the internal variable resistor.

Standard B7A Interface Unit C200H-B7AI1/B7AO1

The Standard B7A Interface Unit used with the B7A Link Terminal allows the transmission and reception of 16-point I/O data over two wires.

The following Standard B7A Interface Unit and B7A Link Terminal models are available.

B7A Interface Unit	B7A Link Terminals
16-point input: C200H-B7AI1	B7A-T6□1 (Screw terminal models) B7A-T6D2 (Modular models)
16-point output: C200H-B7AO1	B7A-R6□□1 (Screw terminal models) B7A-R6A52 (Modular models)

Note If the B7A Interface Unit is mounted to a Rack with a C200HW-PD024 24-VDC Power Supply Unit, supply 24 VDC from an independent power supply to the B7A Interface Unit or use a transformer to separate the power supply line to the B7A Interface Unit from the power supply lines to the CPU Unit and I/O Power Supply Unit.

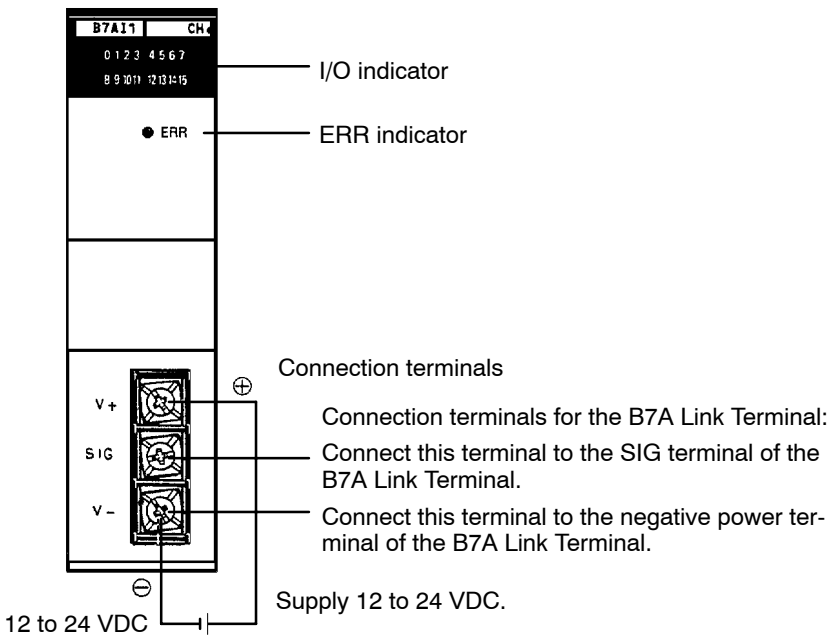

I/O Indicator
Indicates the ON or OFF status of input from the B7A Link Terminal or the ON and OFF status of output to the B7A Link Terminal.

ERR Indicator
Incorporated by the B7AI1 and lit when the B7AI1's data transmission or reception is abnormal.

Connection Terminals
SIG: Connects to the SIG terminal of the B7A Link Terminal.
V–: Connects to the negative power terminal of the B7A Link Terminal.

⚠ **Caution** If the terminals are not connected correctly, the internal circuitry of the B7A Link Terminal will be damaged.

Note 1. The transmission cable must be a VCTF cable with a thickness of 0.75 mm^2 minimum.
2. Do not wire power lines or high-tension lines along with the transmission cable in the same conduit.

Input Mode Selector
The B7AI1 incorporates an input mode selector on the back panel of the Unit, with which the following modes can be set.

Input mode		15 points + 1 error	16 points
Function		Fifteen-point input from the B7A Link Terminal is effective. Bit 15 is used as transmission error bit.	Sixteen-point input from the B7A Link Terminal is effective.
Switch setting		Upper side	Lower side
Bit no. allocation	00 to 14	Input 00 to input 14	Input 00 to input 14
	15	Transmission error bit	Input 15
Status of input indicator lamp 15		Not used	Lit when input 15 is ON. Not lit when input 15 is OFF.
Status of the ERR indicator		Lit when there is a transmission error and OFF during normal transmission	

The ERR indicator is lit when an error occurs. If the error is corrected, the ERR indicator is OFF at the next transmission cycle.

When there is a transmission error, the B7A Link Terminal will hold the data just before the occurrence of the transmission error. If there is a transmission error because the B7A Link Terminal is turned off, however, data 0 is transmitted in the first transmission cycle when the B7A Link Terminal is turned on again.

Transmission errors between the C200H-B7AO1 and B7A Link Terminal are detected by the B7A Link Terminal only. Check the ERR indicator and error bit for any error.

Performance Specifications

Item	C200H-B7AI1	C200H-B7AO1
I/O points	16 points or 15 points and 1 error input	16 output points
Transmission distance	500 m max. if power is supplied to the Interface Unit and B7A Link Terminal separately. 100 m max. if power is supplied to the Interface Unit and B7A Link Terminal from a single power supply. (24 VDC±10%)	
Transmission delay	Typ. 19.2 ms, 31 ms max.	
Minimum input time (see note 1)	---	16 ms
Internal current consumption	5 VDC, 100 mA max.	
External power supply (see note 2)	12 to 24 VDC ±10%, 10 mA min.	12 to 24 VDC ±10%, 30 mA min.
Weight	200 g max.	

Note 1. The minimum input time refers to the minimum time required for reading the input signals from the CPU Unit. The ON/OFF width of the signal transmitted from the CPU Unit to the Output Relay of the B7A Interface Unit should be set to a value larger than the minimum input time.
2. The value of the external power supply does not include the value required by the B7A Link Terminal.

Group-2 B7A Interface Units (C200H-B7A□□)

A Group-2 B7A Interface Unit used with two or four B7A Link Terminals allows the transmission and reception of 32-point or 64-point I/O data over two-conductor cables.

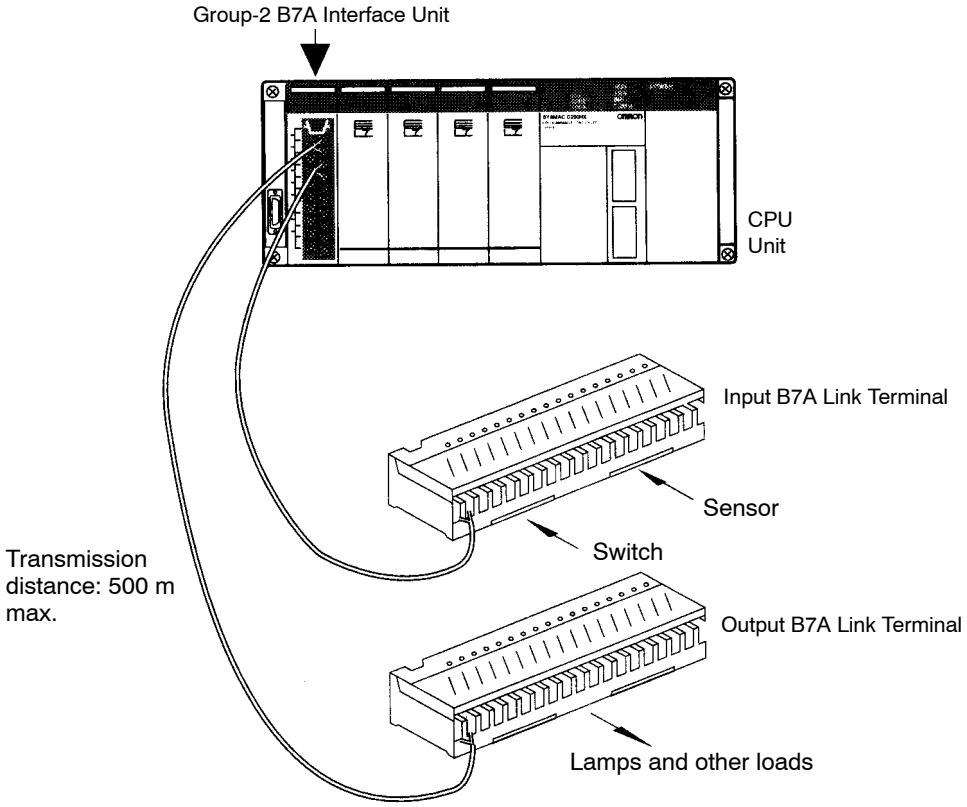

Group-2 B7A Interface Units can be mounted to a CPU Rack or an Expansion I/O Rack. They cannot be mounted to Slave Racks.

The words allocated to Group-2 B7A Interface Units are determined by I/O number set on the Units. Units with 32 I/O points are allocated two words; Units with 64 I/O points are allocated four words.

Refer to the *B7A Link Terminals Datasheet* for more information on B7A Link Terminals.

Models

The following Group-2 B7A Interface Units are available.

B7A Interface Unit	Inputs	Outputs
C200H-B7A12	32 points	None
C200H-B7A02	None	32 points
C200H-B7A21	16 points	16 points
C200H-B7A22	32 points	32points

Connectable B7A Link Terminals

Only 16-point B7A Link Terminals can be connected to a B7A Interface Unit. These are listed in the following tables.

Input Terminals

Type	Model	Transmission delay
Screw terminals	B7A-T6□1	Standard (19.2 ms)
	B7AS-T6□1	
	B7A-T6□6	High-speed (3 ms)
	B7AS-T6□6	
Modular	B7A-T6D2	Standard (19.2 ms)
	B7A-T6D7	High-speed (3 ms)
PC connectors	B7A-T□E3	Standard (19.2 ms)
	B7A-T□E8	High-speed (3 ms)

Output Terminals

Type	Model	Transmission delay
Screw terminals	B7A-R6□□1	Standard (19.2 ms)
	B7AS-R6□□1	
	B7A-R6□□6	High-speed (3 ms)
	B7AS-R6□□6	
Modular	B7A-R6A52	Standard (19.2 ms)
	B7A-R6A57	High-speed (3 ms)
PC connectors	B7A-R□A□3	Standard (19.2 ms)
	B7A-R□A□8	High-speed (3 ms)

Note 1. Do not connect Terminals with different transmission delays to the same Interface Unit. Doing so will cause a transmission error.

2. B7A Link Terminals with 10-points and B7A Link Terminals with mixed I/O (8 inputs/8 outputs) cannot be connected to B7A Interface Units. Use 16-point B7A Link Terminals. 16-point B7A Link Terminals include 16-point (input or output) models, models with 2 circuits configured with 16 points, and models with 16 points of mixed I/O.

Comparison between Standard and Group-2 B7A Interface Units

Type	Models	Word allocations	Connectable B7A Link Terminals		
			Transmission delay	Transmission errors	Points
Standard	C200H-B7AI1	Same as I/O Units (in order mounted).	Standard types only (19.2 ms)	Input status held automatically	16-point Terminals only (10-point, 32-point, and mixed I/O Terminals cannot be connected.
	C200H-B7AO2				
Group-2	C200H-B7A12	Words 030 to 049 allocated according to I/O number setting (same as Group-2 High-density I/O Units; see note below)	Standard (19.2 ms) and high-speed (3 ms) types (set via switch)	Switch setting to hold or reset Input status.	
	C200H-B7A02				
	C200H-B7A21				
	C200H-B7A22				

Note In the case of Group-2 B7A Interface Units, words 030 to 049 (Group-2 High-density I/O Unit and B7A Interface Unit Area) are allocated according to the setting of the I/O number setting switch on the front of the Unit as shown in the following table. For mixed I/O Units, words are allocated in in the order output → input.

Type	Models	Words allocated per Unit	Allocation order	Example: For I/O number 0
32 input points	C200H-B7A12	2	2 words for inputs	030: input
32 output points	C200H-B7A02		2 words for outputs	030: output
16 output points/16 input points	C200H-B7A21		1 word for outputs → 1 word for inputs	030: output 031: input
32 output points/32 input points	C200H-B7A22	4	2 words for outputs → 2 words for inputs	030: output 031: output 032: input 033: input

Note
- B7A Link Terminals with 10-points and B7A Link Terminals with mixed I/O (8 inputs/8 outputs) cannot be connected to B7A Interface Units. Use 16-point B7A Link Terminals. 16-point B7A Link Terminals include 16-point models (input and output), models with 2 circuits configured with 16 points, and models with 16 points of mixed I/O.
- Group-2 B7A Interface Units can be mounted to a CPU Rack or an Expansion I/O Rack under a C200H□-CPU□□-(Z)E. They cannot be mounted to Slave Racks.
- B7A Interface Units can be connected to each other. To do so, the transmission delay times of the input and output B7A Interface Units must be set to the same value.

Parts and Names (C200H-B7A22 shown below)

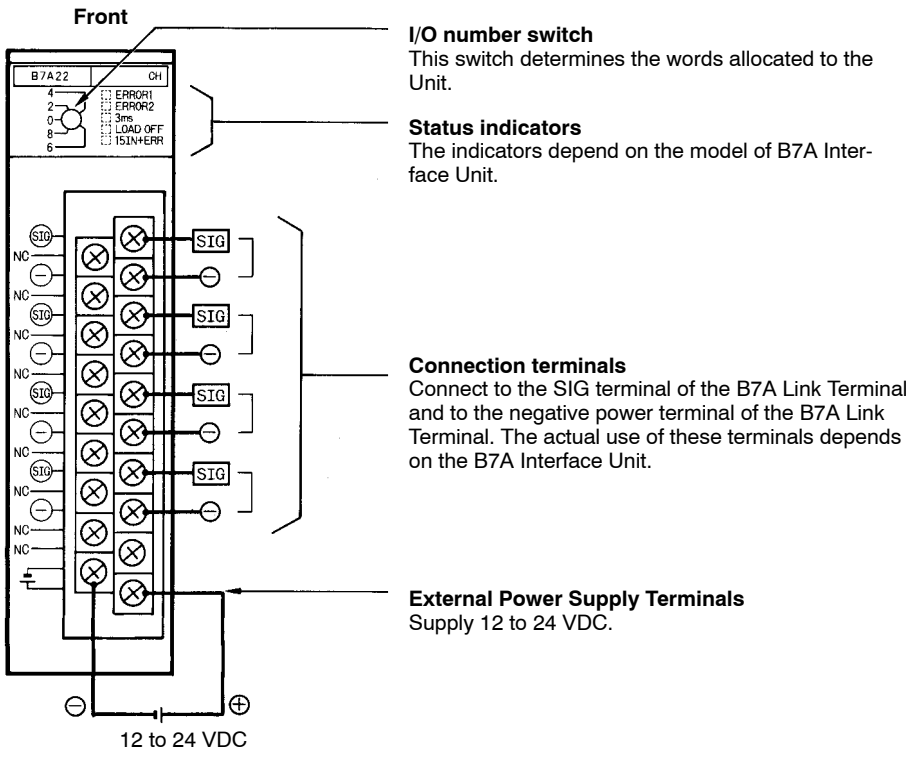

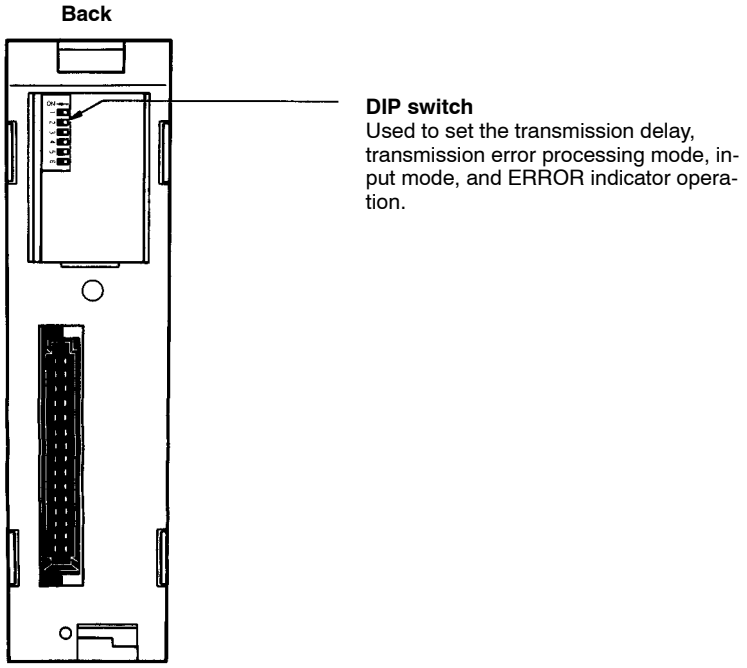

Indicator Operation

The indicators depend on the model of B7A Interface Unit, as shown below.

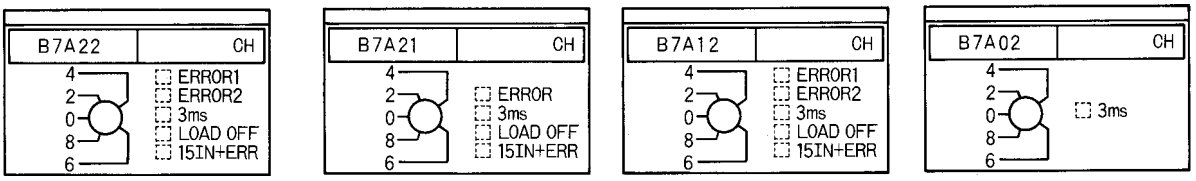

Name		Color	Function
ERROR 1 ERROR 2 ERROR	Input transmission error	Red	Lights when an error occurs in transmissions from an Input B7A Link Terminal. For the B7A12/22, ERROR 1 is for the first word allocated to the B7A Interface Unit; ERROR 2 is for the second word.
3ms	Transmission delay setting	Orange	Lit when the transmission delay is set to the high-speed setting (3 ms). Not lit when the transmission delay is set to the standard setting (19.2 ms).
LOAD OFF	Transmission error process	Orange	Lit when the processing for transmission errors is set to reset input status. Not lit when the processing for transmission errors is set to hold input status.
15IN+ERR	Input mode setting	Orange	Lit when the input mode is set to use 15 inputs and 1 error input. Not lit when the input mode is set to use 16 inputs.

I/O Number Setting

The setting of the I/O number determines the words allocated to the Interface Unit. Set the I/O number to between 0 and 9.

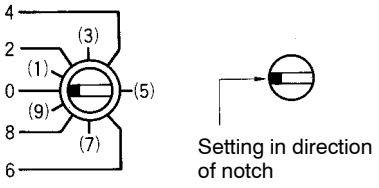

Note 1. Turn off the power supply to the PC before changing the I/O number setting. Any new setting will not be effective until the next time the power supply is turned on.

2. Use a flat-blade screw driver to change the I/O number setting. Be careful not to leave the switch halfway between settings and be careful not to damage the switch.

The following table shows the words allocated according to the I/O number. The 32-point Units are the C200H-B7A12, C200H-B7A02, and C200H-B7A21. The 64-point Unit is the C200H-B7A22.

I/O No.	Words	
	32-point Units	64-point Unit
0	IR 030 and IR 031	IR 030 to IR 033
1	IR 032 and IR 033	IR 032 to IR 035
2	IR 034 and IR 035	IR 034 to IR 037
3	IR 036 and IR 037	IR 036 to IR 039
4	IR 038 and IR 039	IR 038 to IR 041
5	IR 040 and IR 041	IR 040 to IR 043
6	IR 042 and IR 043	IR 042 to IR 045
7	IR 044 and IR 045	IR 044 to IR 047
8	IR 046 and IR 047	IR 046 to IR 049
9	IR 048 and IR 049	Do not use.

Note 1. Be sure that the same words are not allocated to more than one Unit. For example, if you set a 64-point Unit to I/O number 0, you cannot use I/O number 1 for any Unit.

2. The above words are also allocated to Group-2 High-density I/O Units. Be sure that the same words are not allocated to more than one Unit.

DIP Switch Settings

Set the DIP switch as described before for the various models of B7A Interface Units.

C200H-B7A22/12

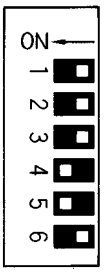

Factory setting (pins 4 and 5 ON)

Pin	Function	OFF	ON
1	Transmission delay	Standard (19.2 ms)	High-speed (3 ms)
2	Transmission error process	Hold status	Reset Inputs
3	Input mode	16 inputs	15 inputs + error input
4	ERROR 1 indicator enable	Disabled	Enabled
5	ERROR 2 indicator enable	Disabled	Enabled
6	Not used.	NA	NA

C200H-B7A21

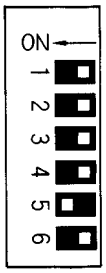

Factory setting (pin 5 ON)

Pin	Function	OFF	ON
1	Transmission delay	Standard (19.2 ms)	High-speed (3 ms)
2	Transmission error process	Hold status	Reset Inputs
3	Input mode	16 inputs	15 inputs + error input
4	ERROR indicator enable	Disabled	Enabled
5	Not used.	NA	NA
6	Not used.	NA	NA

C200H-B7A02

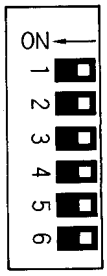

Factory setting (all pins OFF)

Pin	Function	OFF	ON
1	Transmission delay	Standard (19.2 ms)	High-speed (3 ms)
2	Not used.	NA	NA
3	Not used.	NA	NA
4	Not used.	NA	NA
5	Not used.	NA	NA
6	Not used.	NA	NA

Transmission Delay

Pin 1 is used to set the transmission delay. The same delay is used for all words allocated to the Unit.

Set the transmission delay to match that of the B7A Link Terminal. A transmission error will occur if the same transmission delay is not set.

The “3ms” indicator will be lit whenever the high-speed (3 ms) transmission delay is set.

Transmission Error Process
Pin 2 is used to turned ON to specify resetting input status when transmission errors occur. If pin 2 is turned OFF, input status will be held when transmission errors occur.

The LOAD OFF indicator will be lit whenever pin 2 is turned ON.

Input Mode
Pin 3 is turned ON to specify use of only 15 inputs and the use of bit 15 as a Transmission Error Flag. If pin 3 is OFF, 16 normal inputs can be used.

The “15IN+ERR” indicator will be lit whenever pin 3 is turned ON.

ERROR Indicators
Pin 4 or pins 4 and 5 are turned ON to enable the ERROR, ERROR 1, and/or ERROR 2 indicators. These indicators will not light even if a transmission error occurs if the corresponding pin is turned OFF.

Transmission Error Precautions

Startup
The Transmission Error Flag for the B7A Interface Unit will be OFF when power is turned on to the C200HX/C200HG/C200HE. If normal transmissions with the B7A Link Terminal are not possible within about 10 ms, the Transmission Error Flag (bit 15) will turn ON (i.e., if its operation is enabled by the input mode setting).

All input bits will remain OFF until normal transmissions are achieved.

Inputs
When a transmission error occurs, input status will be either held or all inputs will be reset according to the setting for the transmission error process, and the Transmission Error Flag (bit 15) will turn ON (i.e., if its operation is enabled by the input mode setting). The Transmission Error Flag will go OFF and the input status will return to normal when normal transmissions are achieved again.

Outputs
Transmission errors for Output B7A Link Terminals are not detected at the B7A Interface Unit and must be confirmed using the error indicators or error outputs on the Link Terminal.

Wiring

Terminal Names and Allocations

The use of the terminals depends on the model of the B7A Interface Unit. “m” indicates the first word allocated to the Unit according to the I/O number setting and can be calculated as follows:

m = 030 + (2 x I/O number)

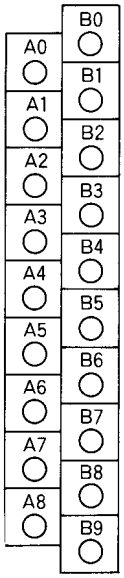

C200H-B7A22

Terminal	Name	Function	Word
B0	SIG OUT1	Connect to SIG terminal on Output B7A Link Terminal.	m
B1	– OUT1	Connect to – power supply terminal on Output B7A Link Terminal.	
B2	SIG OUT2	Connect to SIG terminal on Output B7A Link Terminal.	m + 1
B3	– OUT2	Connect to – power supply terminal on Output B7A Link Terminal.	
B4	SIG IN1	Connect to SIG terminal on Input B7A Link Terminal.	m + 2
B5	– IN1	Connect to – power supply terminal on Input B7A Link Terminal.	
B6	SIG IN2	Connect to SIG terminal on Input B7A Link Terminal.	m + 3
B7	– IN2	Connect to – power supply terminal on Input B7A Link Terminal.	
B8	NC	Not used.	NA
A0 to A7			
B9	+V	Connect to + terminal on external power supply.	
A8	–V	Connect to – terminal on external power supply.	

C200H-B7A21

Terminal	Name	Function	Word
B0	SIG OUT1	Connect to SIG terminal on Output B7A Link Terminal.	m
B1	– OUT1	Connect to – power supply terminal on Output B7A Link Terminal.	
B2, B3	NC	Not used.	NA
B4	SIG IN1	Connect to SIG terminal on Input B7A Link Terminal.	m + 1
B5	– IN1	Connect to – power supply terminal on Input B7A Link Terminal.	
B6 to B8	NC	Not used.	NA
A0 to A7			
B9	+V	Connect to + terminal on external power supply.	
A8	–V	Connect to – terminal on external power supply.	

C200H-B7A12

Terminal	Name	Function	Word
B0	SIG IN1	Connect to SIG terminal on Input B7A Link Terminal.	m
B1	– IN1	Connect to – power supply terminal on Input B7A Link Terminal.	
B2, B3	NC	Not used.	NA
B4	SIG IN2	Connect to SIG terminal on Input B7A Link Terminal.	m + 1
B5	– IN2	Connect to – power supply terminal on Input B7A Link Terminal.	
B6 to B8	NC	Not used.	NA
A0 to A7			
B9	+V	Connect to + terminal on external power supply.	
A8	–V	Connect to – terminal on external power supply.	

C200H-B7A02

Terminal	Name	Function	Word
B0	SIG OUT1	Connect to SIG terminal on Output B7A Link Terminal.	m
B1	– OUT1	Connect to – power supply terminal on Output B7A Link Terminal.	
B2, B3	NC	Not used.	NA
B4	SIG OUT2	Connect to SIG terminal on Output B7A Link Terminal.	m + 1
B5	– OUT2	Connect to – power supply terminal on Output B7A Link Terminal.	
B6 to B8	NC	Not used.	NA
A0 to A7			
B9	+V	Connect to + terminal on external power supply.	
A8	–V	Connect to – terminal on external power supply.	

Recommended Cables and Transmission Distance

The following cables are recommended to connect the B7A Interface Unit to B7A Link Terminals. The wiring method and transmission distance depend on the transmission delay and on whether or not a common power supply is being used for the B7A Link Terminal and the Interface Unit.

Standard Transmission Delays (19.2 ms): Cap-tire Cable

Power supply	Cable	Transmission distance
Common	VCTF, 0.75 mm^2 x 3 conductors	100 m max.
Separate	VCTF ,0.75 mm^2 x 2 conductors	500 m max.

High-speed Transmission Delays (3 ms): Shielded Cable

Power supply	Cable	Transmission distance
Common	Shielded cable, 0.75 mm^2 x 3 conductors	50 m max.
Separate	Shielded cable, 0.75 mm^2 x 2 conductors	100 m max.

Terminal Construction

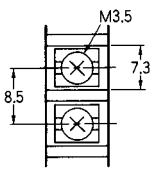

Use hook-type crimp connectors with a line thickness of 0.25 to 1.65 mm^2. The construction of the terminals is shown in the illustration.

Wiring Method

Standard Transmission Delays (19.2 ms)

Common Power Supply

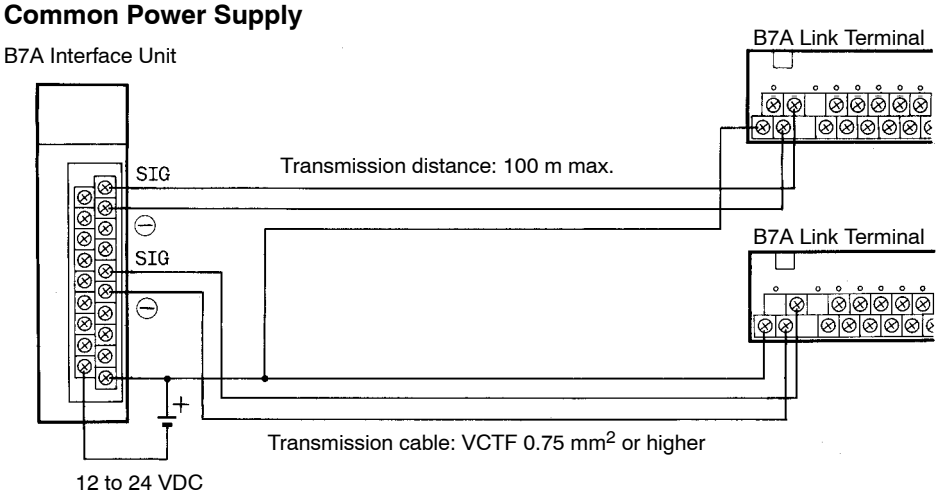

Separate Power Supplies

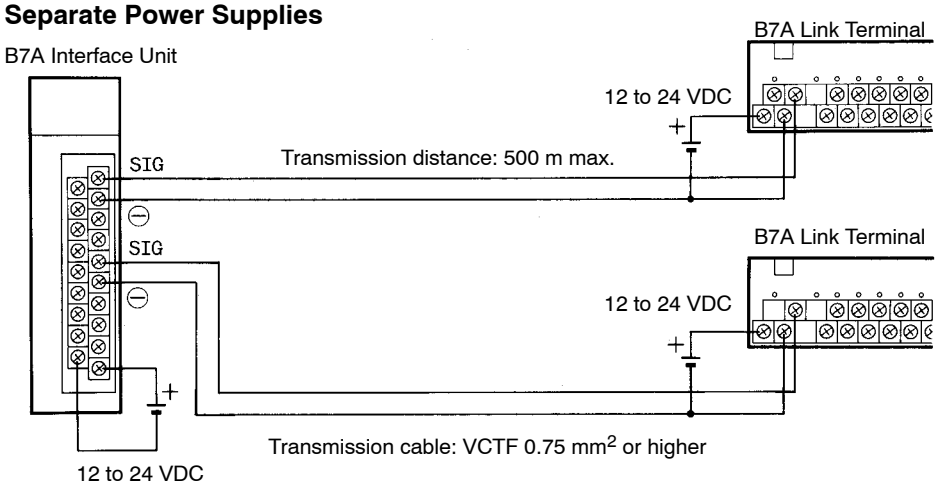

High-speed Transmission Delays (3 ms): Shielded Cable

Common Power Supply

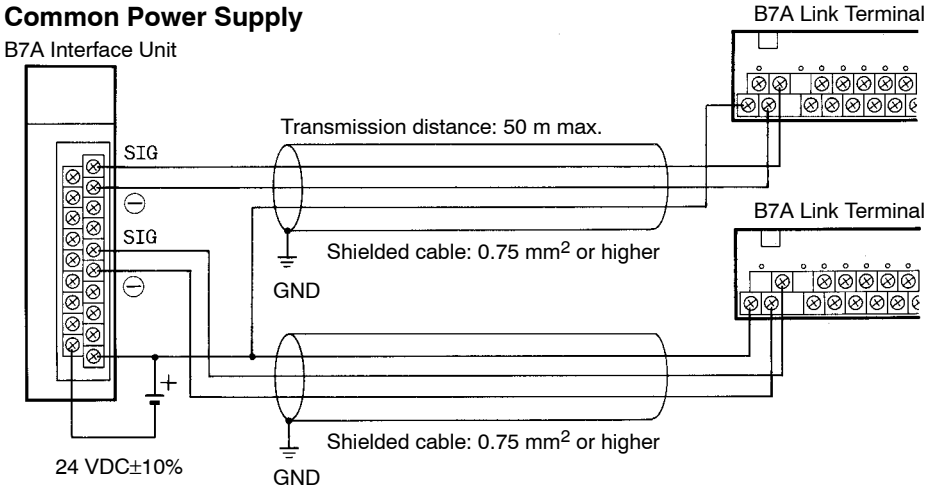

Separate Power Supplies

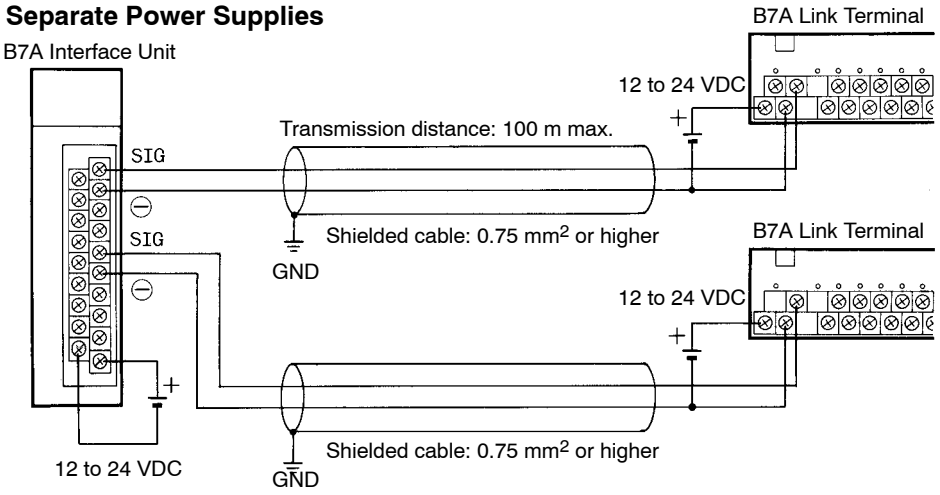

Note 1. We recommend grounding the shielded cable.

2. If shielded cable is not used, the maximum transmission distance is 10 m regardless of whether a common or separate power supplies are used. (Use 0.75 mm^2 or higher VCTF cable.)

3. To prevent noise on the transmission cable, do not lay it near power cables or high-voltage lines.

Specifications

Item	C200H-B7A12	C200H-B7A02	C200H-B7A21	C200H-B7A22
I/O points	32 input points or 30 input points and 2 error inputs	32 output points	16 output points and 16 input points or 15 input points + 1 error input	32 output points and 32 input points or 30 input points + 2 error inputs
Transmission method	One-way distributed multiplex transmission			
Transmission distance (see note 1)	Standard: 500 m max. High-speed: 100 m max.			
Transmission delay	Standard: Typ. 19.2 ms, 31 ms max. High-speed: Typ. 3 ms, 5 ms max.			
Minimum input time (see note 2, 3)	Standard: 16 ms High-speed: 2.4 ms			
Internal current consumption	5 VDC, 100 mA max.			
External power supply (see note 4)	12 to 24 VDC ±10%			
	0.05 A min.	0.06 A min.	0.05 A min.	0.08 A min.
Weight	300 g max.			
Dimensions	35 x 130 x 128 mm (W x H x D)			

Note 1. The transmission distance also depends on whether a common or separate power supplies are used.

2. The minimum input time refers to the minimum time required for reading the input signals from the CPU Unit.
3. The ON/OFF width of the signal transmitted from the CPU Unit to the Output Relay of the B7A Interface Unit should be set to a value larger than the minimum input time.
4. The capacity of the external power supply does not include the capacity required by the B7A Link Terminal.

Dimensions

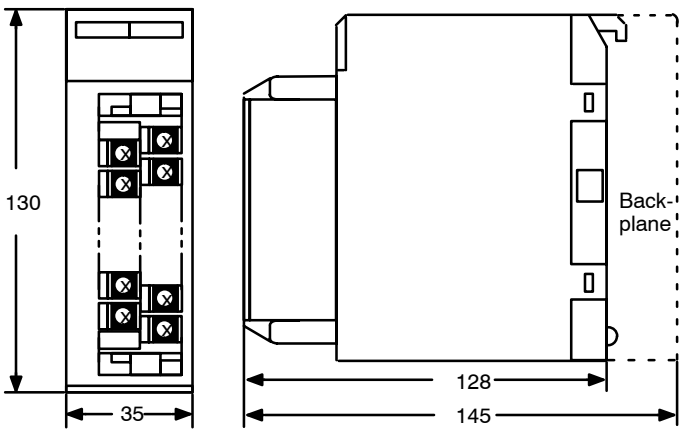

Appendix C
Unit Current and Power Consumption

Maximum Current and Power Supplied

There are limits to the current and power that can be supplied to each Rack and Unit. When designing the system, take the current consumption into account.

Follow the charts below and be careful that the total current consumption does not exceed the maximum current and maximum total power supplied.

Current Supplied

Model number	Max. current supplied			Maximum power supplied
	5 V	26 V	24 V (No-voltage contact current)	
C200HW-PA204	4.6 A	0.625 A	---	30 W
C200HW-PA204S	4.6 A	0.625 A	0.8 A	30 W (See note 2.)
C200HW-PA204R	4.6 A	0.625 A	---	30 W
C200HW-PA209R	9.0 A	1.3 A	---	45 W
C200HW-PA204C	4.6 A	0.625 A	---	30 W
C200HW-PD024	4.6 A	0.625 A	---	30 W
C200HW-PD025	5.3 A	1.3 A	---	40 W

Note 1. The sum total of the 5-V, 26-V, and 24-V power consumptions must be 30 W max. for the C200HW-PA204□, 40 W max. for the C200HW-PD025, or 45 W max. for the PA209.

2. For C200HW-PA204S, the total also includes the power consumption of the power supply output terminals.

Design the system so that the following conditions are satisfied.

Condition 1

(1) (Total current consumption of all Units in the 5-V system) ≤ (the figure in the 5-V column)

(2) (Total current consumption of all Units in the 26-V system) ≤ (the figure in the 26-V column)

(3) (Total current consumption of all Units in the 24-V system) ≤ (the figure in the 24-V column)

Condition 2

(1) x 5 V + (2) x 26 V + (3) x 24 V ≤ (maximum power supplied)

Calculating Current and Power Consumption

The method of calculating current and power consumption is demonstrated here using the following Unit combinations as examples.

Example 1: For C200HW-PA204S

OC221 Contact Output Units: 4 Units
ID211 No-voltage Input Units: 3 Units
LK202 Host Link Unit: 1 Unit
External power supply used: 0.3 A

Power Supply	Current Consumption	Power Consumption
5-V system	0.01 x 7 + 0.25 = 0.32 A (≤ 4.6 A)	0.32 A x 5 V = 1.6 W
26-V system	0.075 x 4 = 0.30 A (≤ 0.6 A)	0.30 A x 26 V = 7.8 W
24-V system	0.06 x 3 + 0.3 = 0.48 A (≤ 0.8 A)	0.48 A x 24 V = 11.52 W

Total = 20.92 W (≤ 30 W)

Example 2: **For C200HW-PA204S**

ID212 DC Input Units: 6 Units
CT002 High-speed Counter Units: 2 Units
External power supply used (for ID212): 0.8 A

Power Supply	Current Consumption	Power Consumption
5-V system	0.01 x 6 + 0.3 x 2 = 0.66 A (≤ 4.6 A)	0.66 A x 5 V = 3.3 W
26-V system	0	0
24-V system	Ext. power supply = 0.8 A (≤ 0.8 A)	0.8 A x 24 V = 19.2 W

Total = 22.5 W (≤ 30W)

Example 3: **For C200HW-PA204S**

OC221 Contact Output Units: 4 Units
ID217 High-density Input Unit: 1 Unit
OD219 High-density Output Unit: 1 Unit
CT002 High-speed Counter Unit: 1 Unit
External power supply used (for ID217): 0.3 A

Power Supply	Current Consumption	Power Consumption
5-V system	0.01 x 4 + 0.12 + 0.27 +0.3 = 0.73 A (≤ 4.6 A)	0.73 A x 5 V = 3.65 W
26-V system	0.075 x 4 = 0.30 A (≤ 0.6 A)	0.3 A x 26 V = 7.8 W
24-V system	Ext. power supply = 0.8 A (≤ 0.8 A)	0.8 A x 24 V = 19.2 W

Total = 18.65 W (≤ 30 W)

Calculating Power Consumption for Racks

The total power consumption (primary power input) for an individual Rack can be broadly calculated as shown in the following examples.

Example 1: **CPU Rack**

$$\frac{\text{Total power consumption of Units} + 3.5}{0.6 \times 0.55\ (\text{VA})}$$

3.5 = CPU Unit power consumption
0.6 = 60% efficiency
0.55= Power rate

Example 2: **All Other Racks**

$$\frac{\text{Total power consumption of Units} + 2}{0.6 \times 0.55\ (1)\ (\text{VA})}$$

2 = I/O Power Supply Unit (Remote I/O Slave Unit) power consumption
0.6 = 60% efficiency
0.55 (1) = Power rate
(Number in parentheses: when RT002-P or RT202 is used.)

Current Drawn by CPU Units and Backplanes

Unit	Model	5-V supply	26-V supply
CPU Unit	C200HE-CPU□□-E C200HG-CPU□□-E C200HX-CPU□□-E	0.5 A	---
CPU Backplane	C200HW-BC□□□	0.1 A	---
I/O Backplane	C200HW-BI□□□	0.15 A	---

Current Drawn by Communications Boards

Unit	Model	5-V supply	26-V supply
Communications Board	C200HW-COM01	0.03 A	---
	C200HW-COM02	0.1 A	---
	C200HW-COM03	0.2 A	---
	C200HW-COM04-E	0.1 A	---
	C200HW-COM05-E	0.1 A	---
	C200HW-COM06-E	0.2 A	---

Current Drawn by Standard I/O Units

Unit	Model number	5-V supply	26-V supply
DC Input	C200H-ID211	0.01 A each	---
	C200H-ID212		
AC Input	C200H-IA121		
	C200H-IA122/IA122V		
	C200H-IA221		
	C200H-IA222/IA222V		
AC/DC Input	C200H-IM211		
	C200H-IM212		
Contact Output	C200H-OC221	0.01 A each	0.075 A per 8 points when points are simultaneously ON
	C200H-OC222		
	C200H-OC223		
	C200H-OC224		
	C200H-OC225	0.05 A	
	C200H-OC222N	0.01 A	0.09 A per 8 points when points are simultaneously ON
	C200H-OC224N	0.01 A	
	C200H-OC226N	0.03 A	
Transistor Output	C200H-OD411	0.14 A	---
	C200H-OD211	0.16 A	
	C200H-OD212	0.18 A	
	C200H-OD213	0.14 A	
	C200H-OD214		
	C200H-OD216	0.01 A each	0.075 A per 8 points when points are simultaneously ON
	C200H-OD217		
	C200H-OA21A	0.16 A	---
Triac Output	C200H-OA222V	0.20A	
	C200H-OA223	0.18 A	
	C200H-OA224	0.27 A	
Analog Timer	C200H-TM001	0.06 A	
Standard B7A Interface	C200H-B7AI1	0.10 A	
	C200H-B7AO1		
Interrupt Input	C200HS-INT01	0.02 A	

Current Drawn by Group-2 High-density I/O Units

Unit	Model number	5-V supply	26-V supply
DC Input	C200H-ID111	0.12 A	---
	C200H-ID216	0.1 A	
	C200H-ID217	0.12 A	
	C200H-ID218	0.1 A	
	C200H-ID219	0.12 A	
Transistor Output	C200H-OD218	0.18 A	
	C200H-OD219	0.27 A	
	C200H-OD21B	0.18 A	

Current Drawn by Group-2 B7A Interface Units

Unit	Model number	5-V supply	26-V supply
B7A Interface Unit (Group-2 Units)	C200H-B7A12/02	0.10 A	---
	C200H-B7A21/22		

Current Drawn by Other Units

Unit	Model number	5-V supply	26-V supply
Host Link	C200H-LK101-PV1	0.25 A	---
	C200H-LK201-V1	0.15 A	
	C200H-LK202-V1	0.25 A	
PC Link	C200H-LK401	0.35 A	
DeviceNet Master	C200HW-DRM21	0.25 A	---
CompoBus/S Master	C200HW-SRM21	0.15 A	---
Remote Master	C200H-RM001-PV1	0.20 A	---
	C200H-RM201	0.25 A	
SYSMAC LINK	C200HW-SLK13/SLK14/ SLK23/SLK24	0.80 A	
SYSMAC NET Link	C200HS-SNT32	1.00 A	
Power Supply Adapter	C200H-APS01/APS02/ APS03	0 A	

Current Drawn by Special I/O Units

Unit	Model number	5-V supply	26-V supply
TTL Input	C200H-ID501	0.13 A	---
DC Input	C200H-ID215		
TTL Output	C200H-OD501	0.22 A	
Transistor Output	C200H-OD215		
TTL I/O	C200H-MD501	0.18 A	
DC Input/Transistor Output	C200H-MD115		
	C200H-MD215		
High-speed Counter	C200H-CT001-V1	0.30 A	
	C200H-CT002		
	C200H-CT021	0.45 A	
Position Control	C200H-NC111	0.15 A	
	C200H-NC112		
	C200H-NC211	0.50 A	
	C200H-NC113 C200H-NC213	0.30 A	
	C200H-NC413	0.50 A	
Analog Input	C200H-AD001	0.55 A	
	C200H-AD002	0.45 A	
Analog Output	C200H-DA001	0.65 A	
	C200H-DA002	0.60 A	
	C200H-PID03		
Motion Control Unit	C200H-MC221	0.65 A (0.85 A when a Teaching Box is connected)	
Temperature Sensor Input	C200H-TS001/TS002	0.45 A	
	C200H-TS101/TS102		
ASCII	C200H-ASC02	0.20 A	
Voice Output	C200H-OV001	0.30 A	
ID Sensor	C200H-IDS01-V1	0.25 A	0.12 A
	C200H-IDS21		

Unit	Model number	5-V supply	26-V supply
Temperature Control	C200H-TC001	0.33 A	---
	C200H-TC002		
	C200H-TC003		
	C200H-TC101		
	C200H-TC102		
	C200H-TC103		
Cam Positioner	C200H-CP114	0.30 A	
Controller Link Unit	C200HW-CLK21	0.30 A	---
PC Card Unit	C200HW-PCU01 C200HW-PCS01	1.7 A	---

Maximum Current and Power Supplied

Model number	Max. current supplied			Maximum power supplied
	5 V	26 V	24 V	
C200H-RT001-P	2.7 A	0.6 A	0.8 A	28 W
C200H-RT002-P			---	23 W
C200H-RT201			0.8 A	28 W
C200H-RT202			---	23 W

Note The sum total of the 5-V, 26-V, and 24-V power consumptions must be equal to or less than the value for the maximum power supplied given in the above table (28 W or 23 W).

Appendix D
Dimensions and Mounting Methods

Racks

The dimensions shown below are for both the CPU Rack and Expansion I/O Racks. The C dimension for the Programming Console will increase by 30 mm when the Programming Console Adapter C200H-BP001 is used, and will increase by 50 mm when the Programming Console Adapter C200H-BP002 is used.

CPU Units

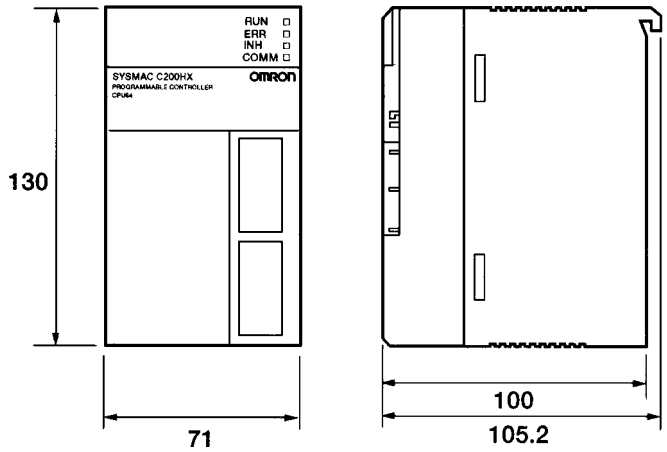

Memory Cassettes

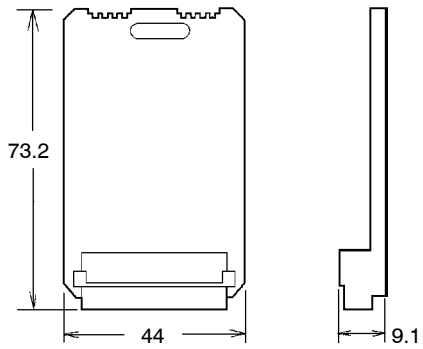

Communications Boards

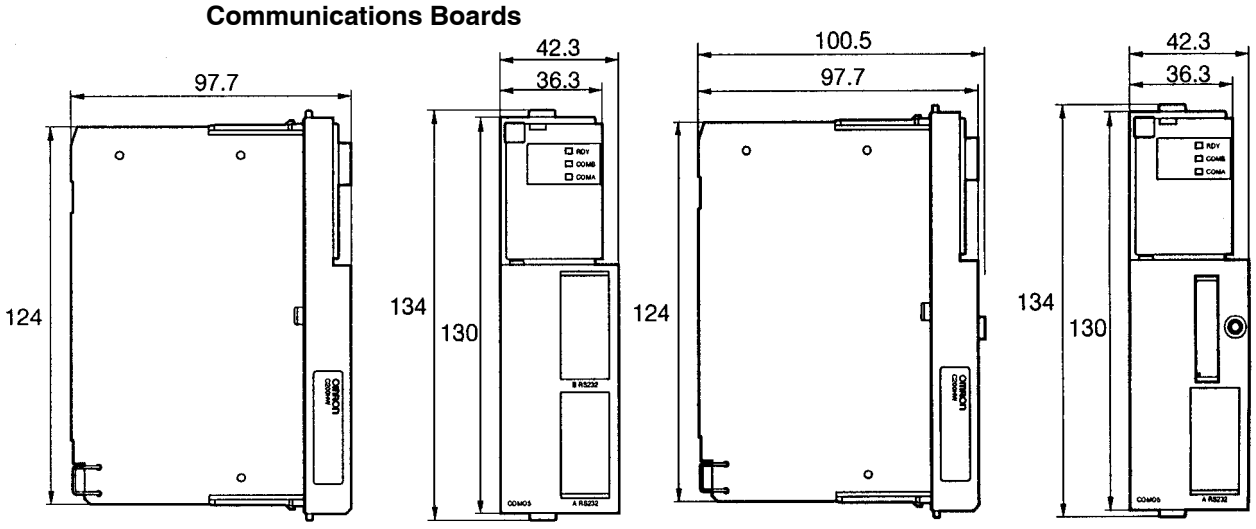

C200HW-COM02/03/05-E/06-E C200HW-COM01/04-E

Backplanes

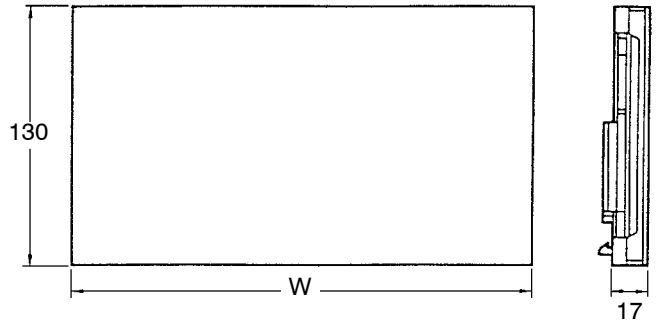

Backplane	Model	Width (W)
CPU Backplane	C200HW-BC031	260 mm
	C200HW-BC051	330 mm
	C200HW-BC081-V1	435 mm
	C200HW-BC101-V1	505 mm
I/O Backplane	C200HW-BI031	189 mm
	C200HW-BI051	259 mm
	C200HW-BI081-V1	364 mm
	C200HW-BI101-V1	434 mm

I/O Connecting Cables

The dimensions shown below are for I/O Connecting Cables.

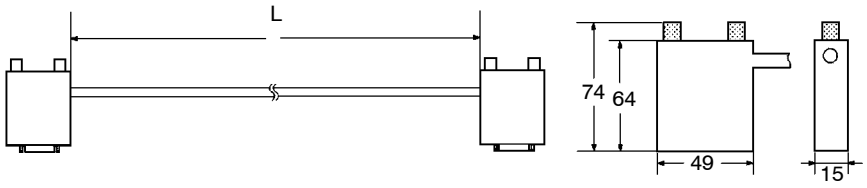

Cable	Length (L)
C200H-CN311	30 cm
C200H-CN711	70 cm
C200H-CN221	2 m
C200H-CN521	5 m
C200H-CN131	10 m

Power Supply Units

C200HW-PA204
C200HW-PA204S
C200HW-PA204R
C200HW-PD024

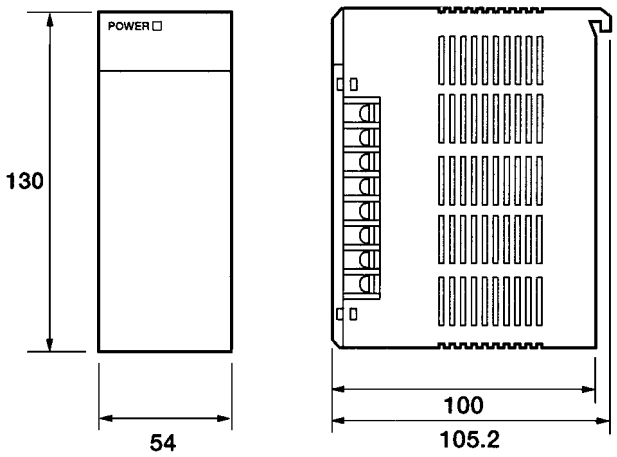

C200HW-PA209R
C200HW-PD025

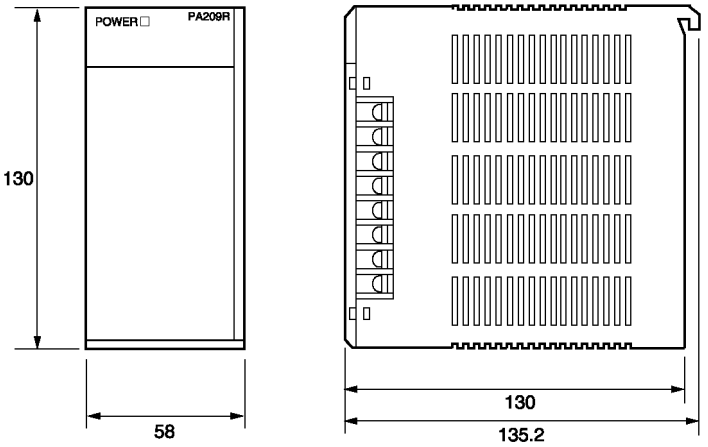

C200HW-PA204C

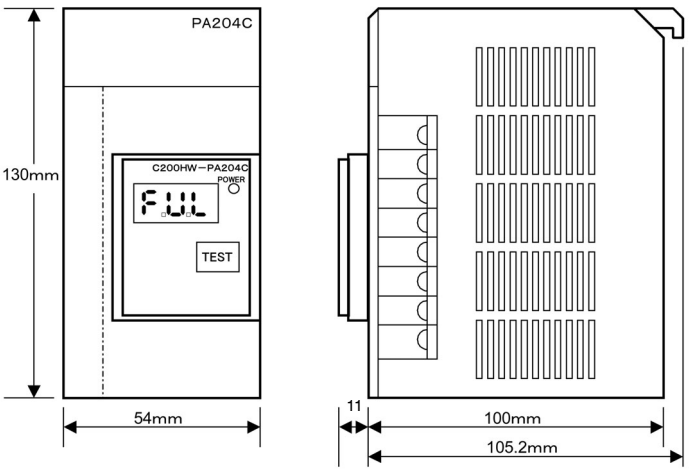

C200H-PRO27 Programming Console

The dimensions shown below are for the Programming Console.

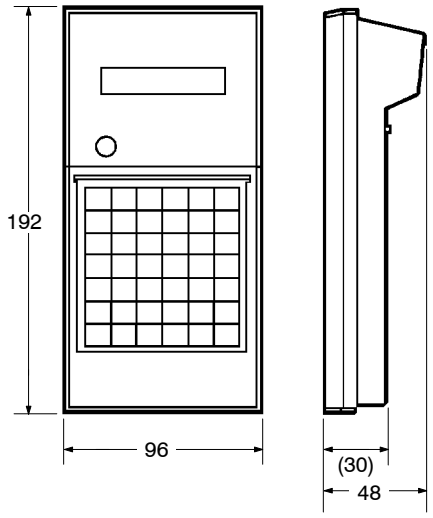

C200H-CN222/CN422 Connecting Cable

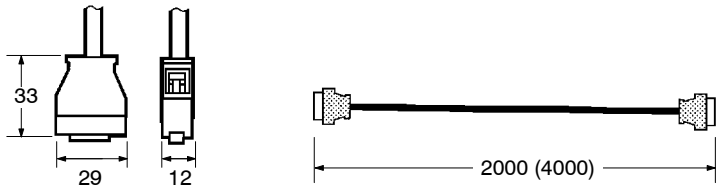

Standard I/O Units

The dimensions shown below are for the two shapes of Standard I/O Units mentioned throughout these specifications.

10-terminal Terminal Block (A-shape I/O Units)

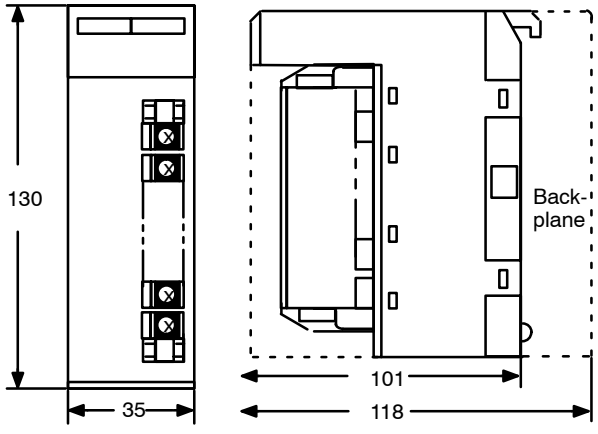

10-terminal Terminal Block (E-shape I/O Units)

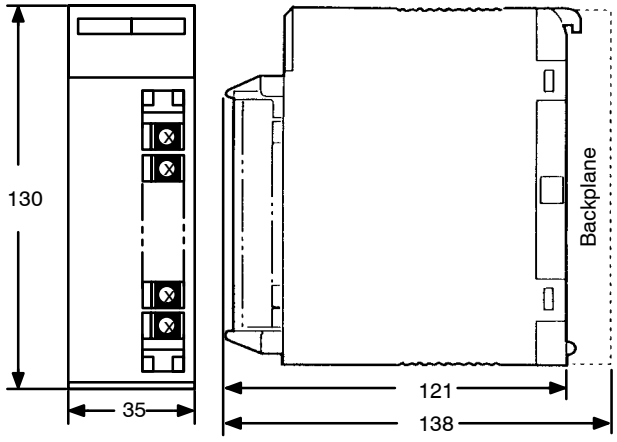

C200H-OA223

19-terminal Terminal Block (B-shape I/O Units)

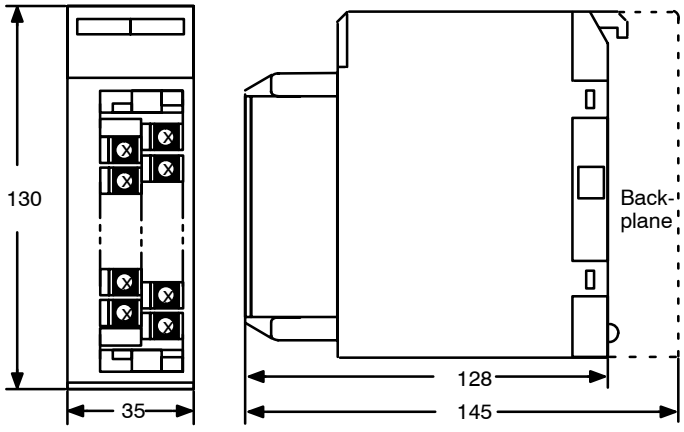

19-terminal Terminal Block (Extended B-shape I/O Units)

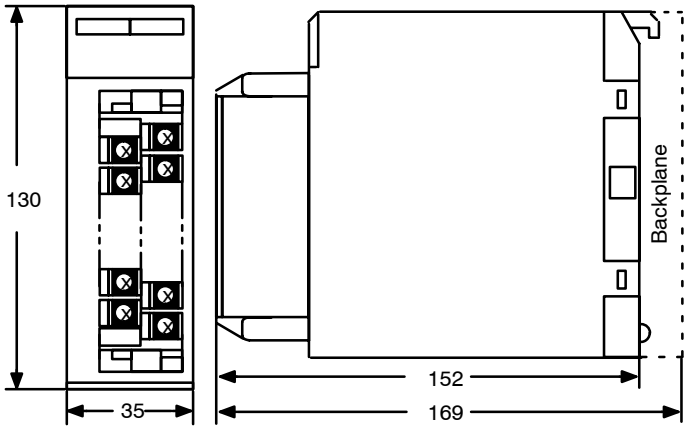

Terminal Dimensions

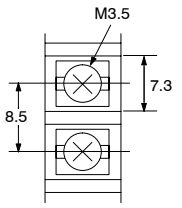

Interrupt Input Unit

The dimensions shown below are for the Interrupt Input Unit classified as Special I/O Units.

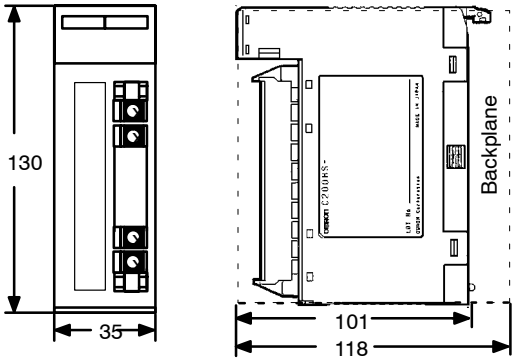

Standard B7A Interface Unit

The dimensions shown below are for the B7A Interface Unit classified as Special I/O Units.

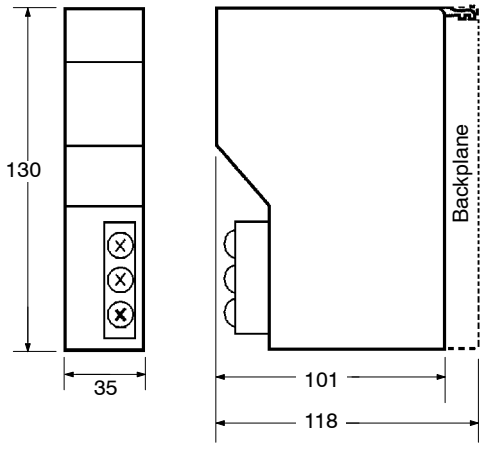

Group-2 B7A Interface Units The dimensions shown below are for the Group-2 B7A Interface Units.

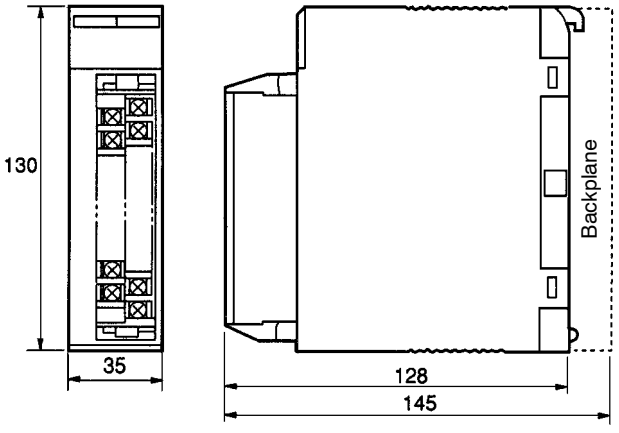

Analog Timer Unit

The dimensions shown below are for the Analog Timer Unit classified as Special I/O Units.

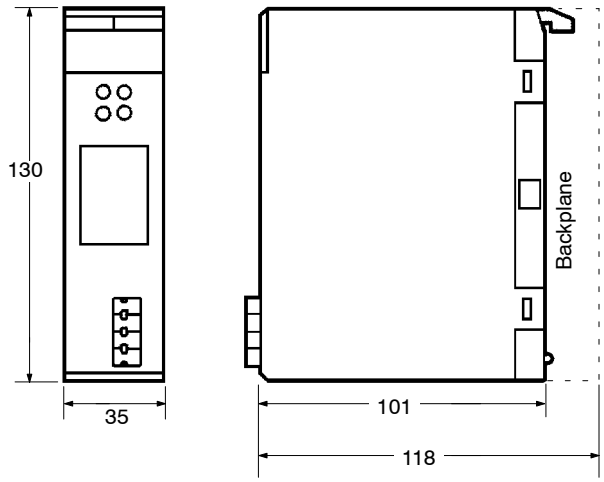

Group-2 High-density I/O Units

The dimensions shown below are for the Group-2 High-density I/O Units.

C and D Types

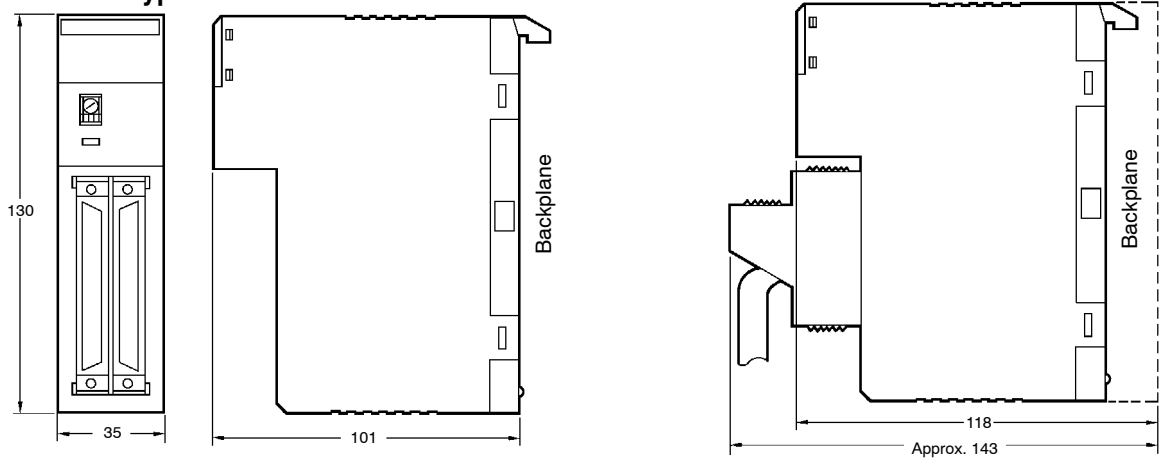

High-density I/O Units (Special I/O Units)

The dimensions shown below are for the High-density I/O Units classified as Special I/O Units.

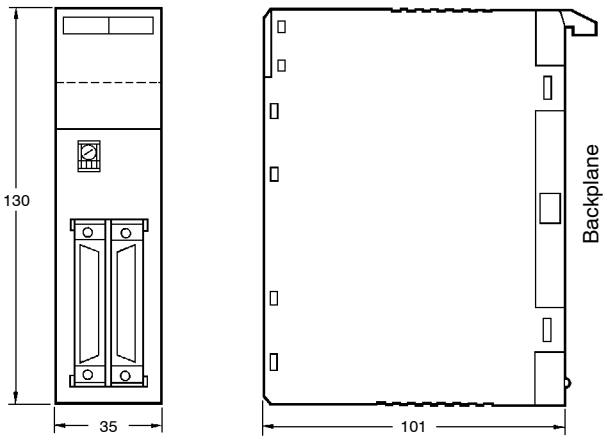

Dimensions with Unit Mounted

Fujitsu Connector

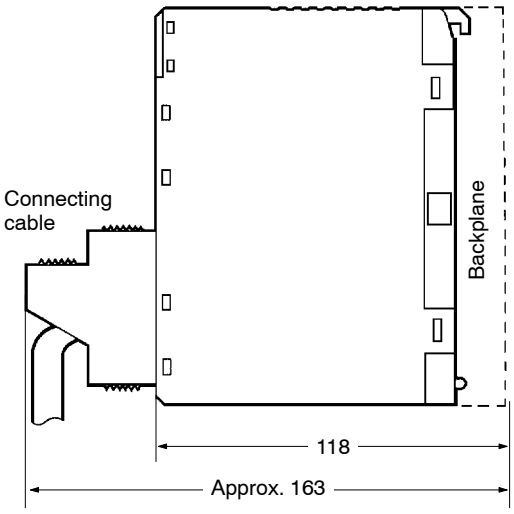

G79-□C Connecting Cable

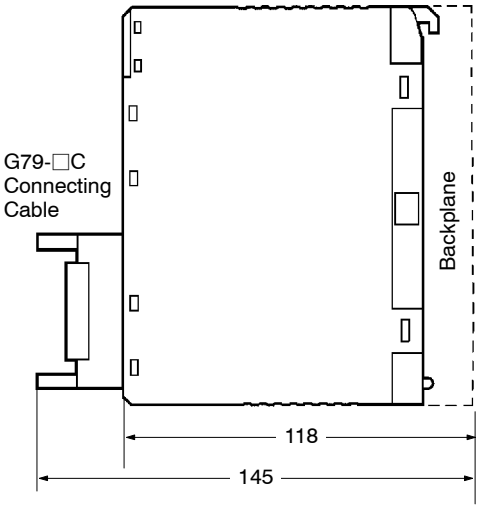

Mounting Dimensions

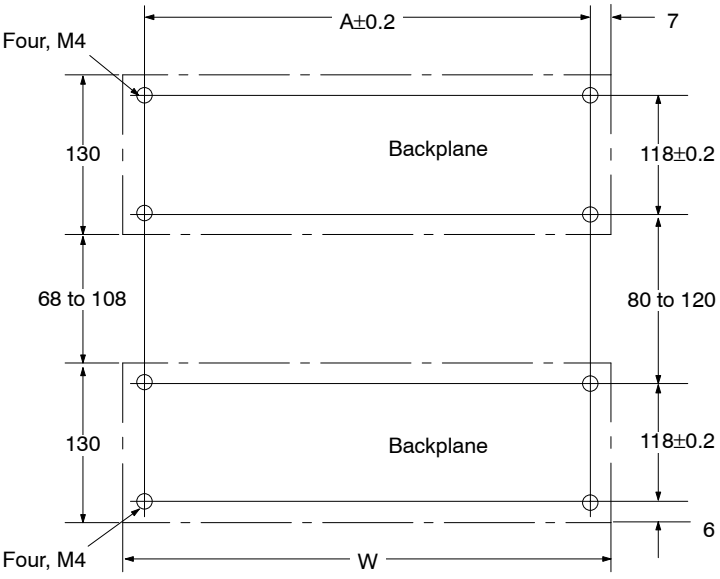

Backplane	Model	A±0.2	W
CPU Backplane	C200HW-BC031	246 mm	260 mm
	C200HW-BC051	316 mm	330 mm
	C200HW-BC081-V1	421 mm	435 mm
	C200HW-BC101-V1	491 mm	505 mm
I/O Backplane	C200HW-BI031	175 mm	189 mm
	C200HW-BI051	245 mm	259 mm
	C200HW-BI081-V1	350 mm	364 mm
	C200HW-BI101-V1	420 mm	434 mm

Panel Mounting of C200H-PRO27 Programming Console

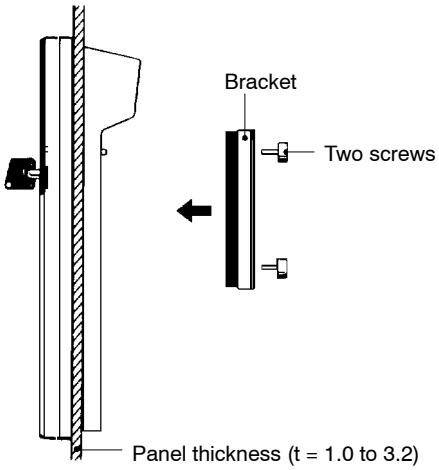

The following is the standard panel cut dimensions for the Programming Console (conforming to DIN 43700).

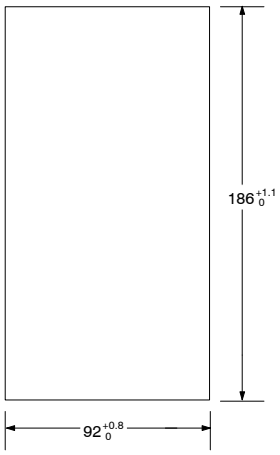

Use the C200H-ATT01 Mounting Bracket (sold separately) to mount the C200H-PRO27 Programming Console to panels.

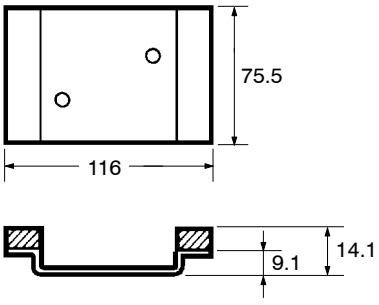

Take the space required for the cable into consideration when mounting the Programming Console to panels.

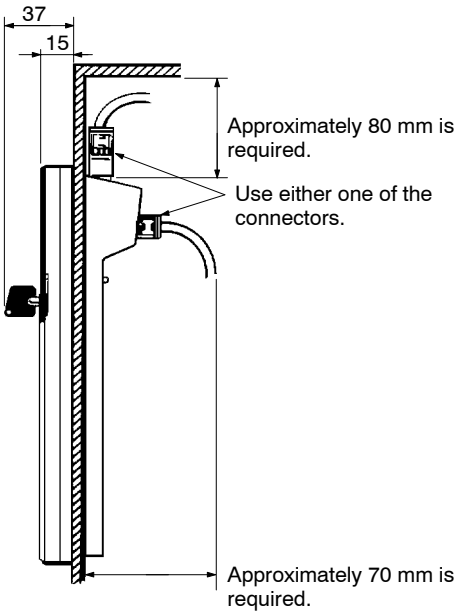

Appendix E
Power Supply Units with Replacement Notification

Principle of Replacement Notification

The Power Supply Unit has a built-in electrolytic capacitor. The electrolytic capacitor is impregnated with electrolytic solution that starts to penetrate the sealing rubber from the time of manufacture. As time elapses, the internal electrolytic solution continues to evaporate, resulting in decreased electrostatic capacity and deterioration in other characteristics. Over time, the characteristic deterioration of the electrolytic capacitor prevents the Power Supply Unit from being utilized to its full capacity. In particular, the speed at which the electrolytic capacitor deteriorates fluctuates greatly with the ambient temperature (generally, a temperature rise of 10°C will double the rate of a reaction, as stated by Arrhenius' law).

The C200HW-PA204C Power Supply Unit with Replacement Notification monitors the internal temperature of the Power Supply Unit while the power is turned ON, and calculates the level of deterioration of the electrolytic capacitor from the operating time and internal temperature.
The replacement notification function displays the approximate time until the Power Supply Unit will stop functioning at its full capacity due to the characteristic deterioration of the electrolytic capacitor, based on the calculated level of deterioration. When 6 months are remaining until replacement is required, the alarm output will turn OFF.

Note The replacement notification function provides an indication of when the deterioration of the electrolytic capacitor will prevent the power supply functioning at its full capacity. It does not provide information on failures occurring due to other causes.

Power Supply Unit with Replacement Notification

Model	Specifications
C200HW-PA204C	Name: Power Supply Unit with Replacement Notification Ratings: 100 to 240 VAC Output capacity: 4.6 A at 5 VDC, 0.625 A at 26 VDC, total of 30 W

Power Supply Unit Replacement Notification Module

C200HW-PA204C

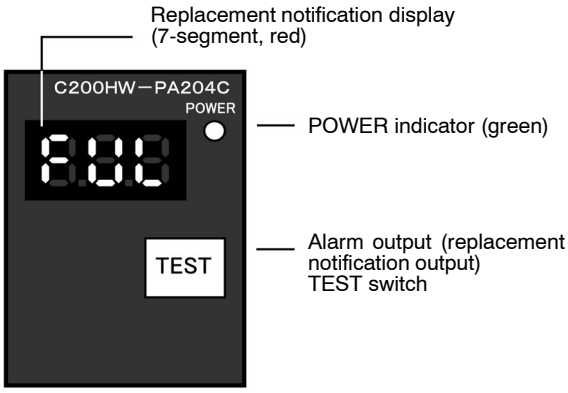

Function

Replacement Notification Function Displays

The replacement notification for the Power Supply Unit is shown using three 7-segment LED displays.

- At time of purchase “FUL” is displayed. The display changes to “HLF” as the electrolytic capacitor deteriorates. Depending on the operating environment, however, “HLF” may not be displayed.
- When the time until replacement is required drops below 2 years, the display will change corresponding to the operating time from “1.5” to “1.0” to “0.5” to “0.0”/“A02.” When the remaining service life reaches 6 months or less, the display will alternate between “0.0” and “A02” in 2-second intervals.

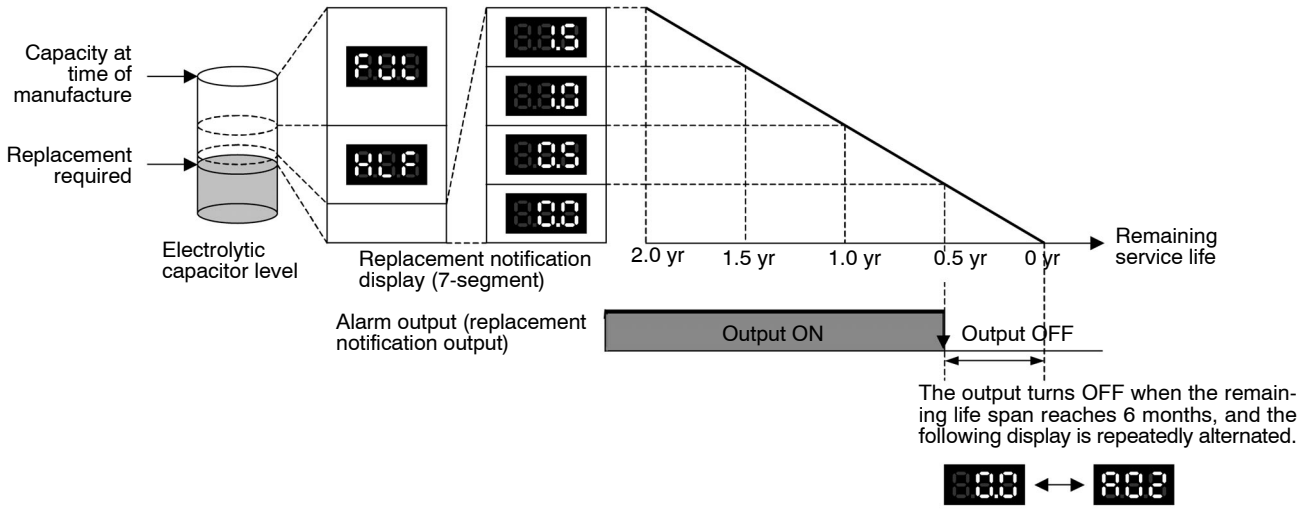

Note 1. The time remaining until replacement does not include periods when the power is turned OFF.

2. Until approximately one month of operating time has accumulated, the display will always be “FUL” and the alarm output will remain ON (conducting) due to the estimated deterioration speed.
3. The time remaining until replacement will vary the operating and storage conditions, so periodically check the display.
4. Fluctuation in the time remaining until replacement may result in the alarm output repeatedly turning ON and OFF.
5. The precision of the replacement notification function will be adversely affected by applications in which the power is frequently turned ON and OFF.
6. Due to the service life of the electronic components, replace the Power Supply Unit approximately 15 years after purchase, even if the replacement notification display or output has not indicated that replacement is required.

Alarm Output (Replacement Notification Output)

The output remains ON until the remaining service life drops below 6 months and then turns OFF.

Note The alarm output will also turn OFF under the following conditions.

- The AC input to the Power Supply Unit is turned OFF.
- An error is detected by the self-diagnostic function.
- The TEST switch is pressed for at least 3 seconds.

Reference: Example of Using the Alarm Output

Monitoring Power Supply Replacement Notification in the System (6 Months or Less Until Replacement Is Required)

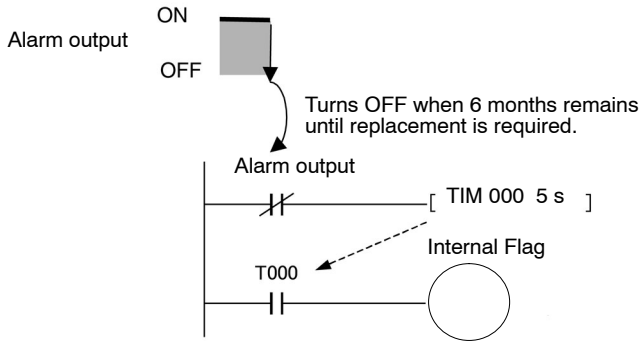

The Flag is programmed to allow for the delay in the alarm output at system startup. The Flag does not turn ON when the alarm output is ON (normal operation). When the alarm output turns OFF (replacement required), the Flag turns ON, and the replacement notification can be monitored from the system.

Maintenance Function Using the TEST Switch

The TEST switch is used initially or periodically to check the connection status between the alarm output and external devices.

- Press the TEST switch for at least 3 seconds to display “A02” and force the alarm output OFF. Release the switch to return to normal operating status.
- Press the TEST switch for less than 3 seconds to display the unit version information for the Power Supply Unit.

Precautions

- Replace the Power Supply Unit within 6 months when the display on the front panel of the Power Supply Unit alternates between 0.0 and A02 or the alarm output automatically turns OFF.
- Maintain an ambient storage temperature of –20 to 30°C and humidity of 25% to 70% when storing the product (with the power turned OFF) for longer than 3 months to keep the replacement notification function in optimum working condition. The replacement time is calculated from when the power is turned ON only. The precision of the replacement period will decline if the electrolytic capacitor deteriorates during storage.

Display and Alarm Output Operation

Normal Display: Replacement Notification Display

When 6 months or less are remaining until replacement is required, the display will alternate between “0.0” and “A02” (in 2 second intervals), and the alarm output will turn OFF.

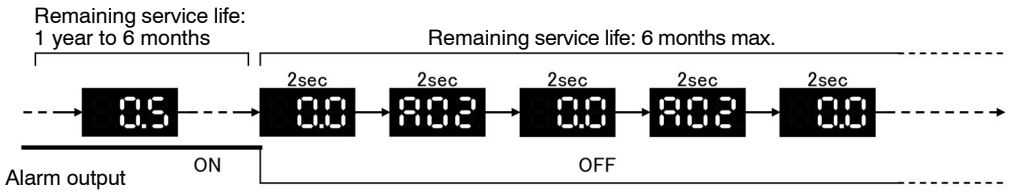

Operation at Powerup

The following initial display is shown when the power is turned ON, after which the replacement notification is displayed. The alarm output turns ON approximately 0.2 seconds after the power is turned ON.

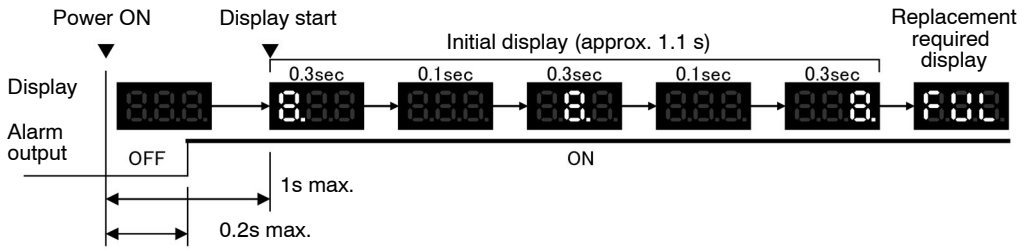

When replacement is already required, the alarm display will follow the initial display. The alarm output will turn ON approximately 0.2 seconds after the power is turned ON, and then turn OFF after approximately 5 seconds.

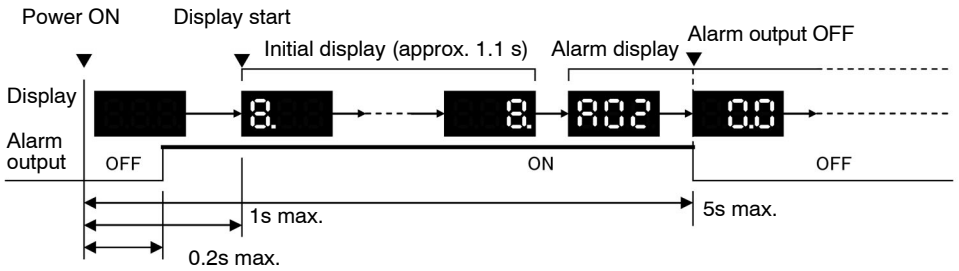

Operation at Power OFF

When the power is turned OFF, the display will turn OFF after the PC operation stops. The alarm output will turn OFF after the display turns OFF.

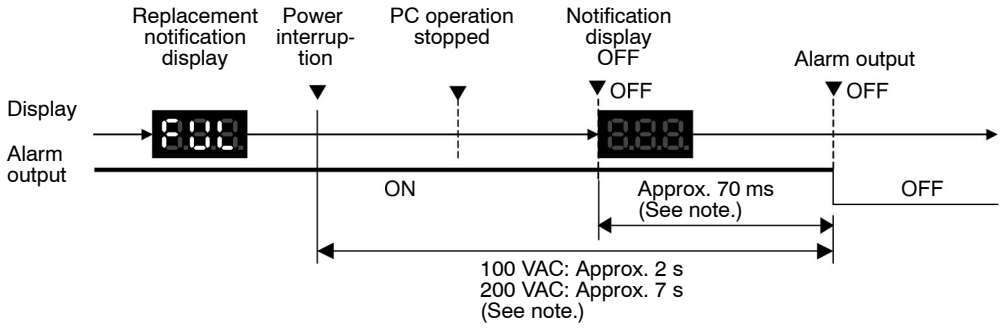

If replacement is already required, the display will turn OFF after the PC operation stops. When the display turns OFF, the alarm output will turn ON momentarily and then turn OFF again.

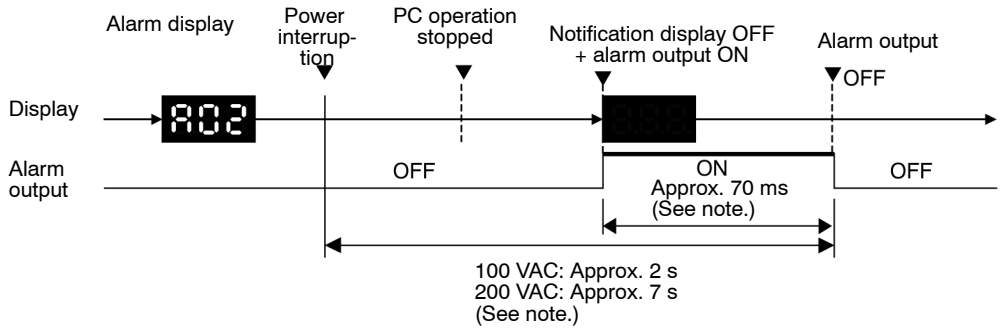

Note The values shown are reference values (calculated for a no-load status on the Power Supply Unit's output).

Operation when TEST Switch Is Pressed

The following operation will be performed when the TEST switch on the replacement notification function module is pressed.
When the switch is pressed for less than 3 seconds, the unit version will be displayed 3 times at 0.5-second intervals.
When the switch is pressed for at least 3 seconds, the alarm output will momentarily turn OFF, and the alarm display A02 will be shown. The operation will return to the normal display and output when the switch is released. Use the TEST switch to check the connection between the replacement notification output and devices.

1. Operation when TEST switch is pressed for less than 3 seconds.

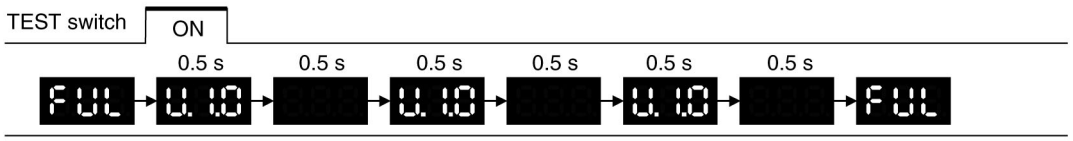

2. Operation when TEST switch is pressed for 3 seconds or longer.

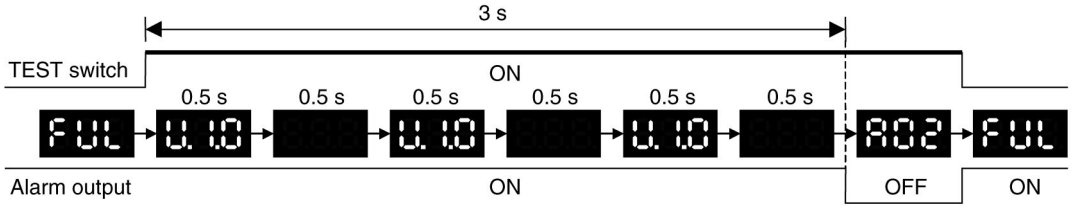

Note Under general operating conditions, the Power Supply Unit's replacement notification function will be activated after several years or later. When the Power Supply Unit is in use for a long period of time, regularly check operation using the TEST switch, and confirm that the alarm output is operating normally.

Self-diagnostic Function

Error name	Display	Alarm output status	Error details (cause)	Recovery method
Unit overheated error	Hot	OFF	Internal overheating has occurred in the Power Supply Unit as a result of usage under conditions that exceed the specified values, insufficient ventilation, or incorrect installation. (See note.)	Remove the cause of the overheating error.
Unit error	E03	OFF	System error from external noise or hardware malfunction.	Turn ON the input's power supply again. If the Unit does not recover, the error may be caused by a Unit malfunction. Consult with your OMRON representative.

Note If the error continues for 3 hours or longer, the replacement notification function will be disabled. Even if the cause of the overheating is removed, the display will continue as "Hot," and the notification output will remain OFF. In this state, the internal parts may deteriorate even if the PC operation is normal, so replace the Power Supply Unit.

Precautions when Replacing Earlier Units

The following precautions apply when replacing a C200HW-PA204/PA204S/PA204R with a C200HW-PA204C.

Terminal Wiring

- Be sure to wire the ground terminals correctly. Incorrect ground terminal wiring will adversely affect the Unit's resistance to noise. (For details on terminal arrangements for each Power Supply Unit, refer to *Part Names and Functions* on page 19.)
- The C200HW-PA204C is not provided with a service power supply and RUN output (RUN).

Startup Time

- The power failure detection voltage of the C200HW–PA204 and C200HW–PA204R depends on the manufacturing date. Refer to the tables of differences for details.
- The time from when the power is turned ON until the PC operation starts is approximately 1 second faster. Make sure that the system will not be adversely affected by the change in timing.

Power Failure Detection Voltage

- The power failure detection voltage of the C200HW–PA204 and C200HW–PA204R depends on the manufacturing date. Refer to the tables of differences for details.
- The power failure detection voltage is 85 V. The PC will stop operating if the voltage drops below this voltage level.

Note If the previously used Power Supply Unit was used with 200 to 240 VAC, power failures were detected when the voltage dropped to 170 V or lower and the PC operation stopped. With C200HW-PA204C, however, operation will not stop between 85 V and 170 V. Therefore, make sure that the system will not be adversely affected by the change in detection voltage.

Comparison between the C200HW-PA204C and the C200HW-PA204

Item	C200HW-PA204C	C200HW-PA204 (Manufactured March 2010 or later)	C200HW-PA204 (Manufactured before March 2010)
Input specifications	100 to 240 VAC (wide range)	100 to 240 VAC (wide range)	100 to 120/200 to 240 VAC (Switched with short bar.)
Power failure detection voltage	85 V max.	85 V max.	100 to 120 VAC: 85 V max. 200 to 240 VAC: 170 V max.
Power supply startup time (See note.)	200 ms max.	200 ms max.	1,500 ms max.
RUN contact output	Not supported	Not supported (Supported by the PA204R)	Not supported (Supported by the PA204R)
Terminal block wiring	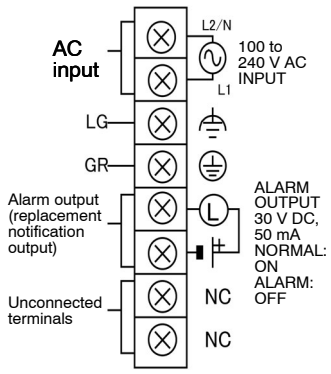	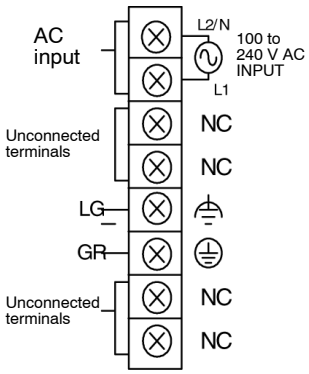	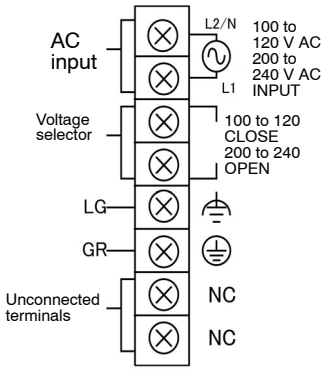
POWER indicator	On replacement notification module	On hood of Power Supply Unit	On hood of Power Supply Unit
Replacement notification	Supported (7-segment display + transistor outputs)	Not supported	Not supported

Note The time from when the external input (AC power supply) is input until 5 V or 26 V is output.

Appendix F
Precautions when Replacing the C200HW-PA204/PA204R

Precautions when Replacing the C200HW-PA204/PA204R

The following precautions apply when replacing a C200HW-PA204/PA204R.

Startup Time

- The time from when the power is turned ON until the PLC operation starts is approximately 1 second faster. Make sure that the system will not be adversely affected by the change in timing.

Power Failure Detection Voltage

- The time from when the power is turned ON until the PLC operation starts is approximately 1 second faster. Make sure that the system will not be adversely affected by the change in timing.The power failure detection voltage is 85 V max. The PLC will stop operating if the voltage drops below this voltage level.

Note If the previously used Power Supply Unit was switchable between 100 to 120 V AC and 200 to 240 V AC and 200 to 240 V AC was used, power failures were detected when the voltage dropped to 170 V or lower and the PLC operation stopped. With C200HW–PA204 Units manufactured from March 2010 and C200HW-PA204R Units manufactured from May 2010, however, operation will not stop between 85 V and 170 V. Therefore, make sure that the system will not be adversely affected by the change in detection voltage.

Unit Differences by Manufacturing Date (Reference Information)

Differences in C200HW–PA204 Models

Model	C200HW-PA204	
Manufacturing date	March 2010 or later	Before March 2010
Identification on nameplate	C200HW-PA204/Wide AC OMRON C200HW-PA204 /Wide AC	C200HW-PA204 OMRON C200HW-PA204
Input specifications	100 to 240 VAC (wide range)	100 to 120 V AC/200 to 240 V AC (Switched with short bar.)
Power failure detection voltage	85 V max.	100 to 120 VAC: 85 V max. 200 to 240 VAC: 170 V max.
Power supply startup time (See note.)	200 ms max.	1,500 ms max.
Service power supply	Not supported	Not supported
RUN contact output	Not supported	Not supported
Terminal block wiring	**C200HW-PA204** 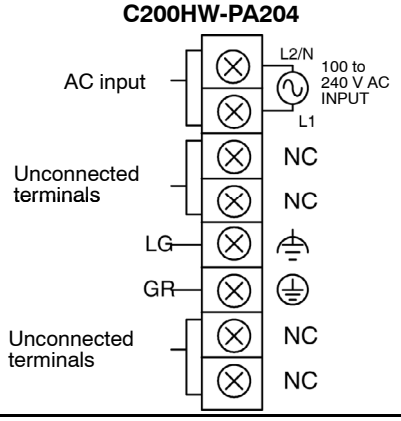	**C200HW-PA204** 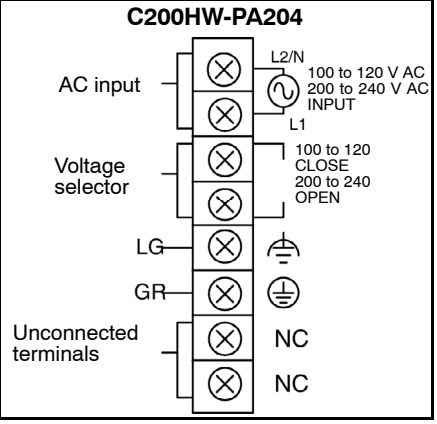

Note The time from when the external input (AC power supply) is input until 5 V or 26 V is output.

Differences in C200HW-PA204R Models

Model	C200HW-PA204R	
Manufacturing date	May 2010 or later	Before May 2010
Identification on nameplate	C200HW-PA204R/Wide AC OMRON C200HW-PA204R /Wide AC	C200HW-PA204R OMRON C200HW-PA204R
Input specifications	100 to 240 VAC (wide range)	100 to 120 V AC/200 to 240 V AC (Switched with short bar.)
Power failure detection voltage	85 V max.	100 to 120 VAC: 85 V max. 200 to 240 VAC: 170 V max.
Power supply startup time (See note.)	200 ms max.	1,500 ms max.
Service power supply	Not supported	Not supported
RUN contact output	Supported	Supported
Terminal block wiring	**C200HW–PA204R** 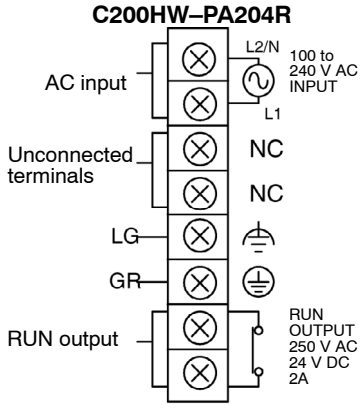 	**C200HW–PA204R** 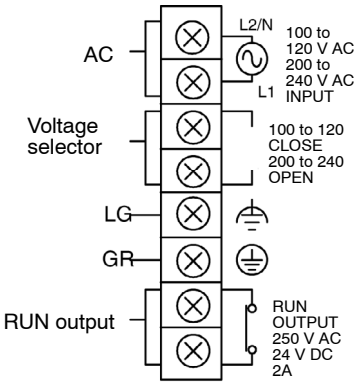

Note The time from when the external input (AC power supply) is input until 5 V or 26 V is output.

Glossary

ASCII code
[A(merican) S(tandard) C(ode for) I(nformation) I(nterchange)] A standard computer code used to facilitate the interchange of information among various types of data-processing equipment.

ASCII Unit
An Intelligent I/O Unit. The ASCII Unit has its own CPU and 16 kilobytes of memory. This Unit enables communication between the PC and any other device which uses ASCII code. The ASCII Unit can be programmed in BASIC.

Backplane
A base to which Units are mounted to form a Rack. Backplanes provide a series of connectors for these Units along with wiring to connect them to the CPU Unit and Power Supply. Backplanes also provide connectors used to connect them to other Backplanes. In some Systems, different Backplanes are used for different Racks; in other Systems, Racks differ only by the Units mounted to them.

back-up
A copy of existing data which is valuable if data is accidentally erased.

baud rate
Transfer speed between two devices in a system measured in bits per second. For example, an optical sensor might be configured to send its information to the personal computer at 9600 baud. It is important for both of the devices to be set to the same baud rate.

bit
The smallest piece of information that can be represented on a computer. A bit has the value of either zero or one, corresponding to the electrical signals ON and OFF. A bit is one binary digit.

central processing unit
A device that is capable of storing a program and data, and executing the set of instructions contained in the program. In a PC System, the central processing unit executes the program, processes I/O signals, communicates with external devices, etc.

communication cable
Cable used to transfer data between components of a control system and conforming to the RS-232C or RS-422 standards.

Communications Board
A board that is mounted to the optional slot of a C200HX/HG/HE CPU Unit. With a Communications Board, the CPU Unit can communicate with the SYSMAC LINK Unit, SYSMAC NET Link Unit, Programmable Terminal, Temperature Controller, personal computer, bar code reader, or any other peripheral device via RS-232C, RS-422, or RS-485.

Control System
All of the hardware and software components used to control other devices. A Control System includes the PC System, the PC programs, and all I/O devices that are used to control or obtain feedback from the controlled system.

counter
A PC function that counts the number of occurrences of a certain event.

CPU
An acronym for central processing unit.

cycle time
The total time it takes the PC to perform internal operations, i.e., reset the watchdog timer, read the program, receive input data, send output data, and execute instructions. Cycle time is monitored by the watchdog timer within the PC, and if it takes longer than a certain specified amount of time, an error message may be generated, or the CPU Unit may just stop. Cycle times will differ depending on the configuration of the system.

data area An area in the PC's memory that is designed to hold a specific type of data, e.g., the LR area is designed to hold common data in a PC Link System.

data link Allows for the connection of up to 32 PCs in a Net Link System where each is contributing information to a common memory area. Data links may be established in the LR and/or DM memory areas.

debugging The process of checking for errors in a program.

default condition The original condition of a function or system. For example, the Ladder Support Software's (LSS) installation utility will place the LSS in the C:\LSS directory, but this default condition can be changed so that it places the LSS in a different directory.

distributed control An automation concept in which control of each portion of an automated system is located near the devices actually being controlled, i.e., control is decentralized and "distributed" over the system. Distributed control is a concept basic to PC Systems.

EEPROM [E(lectrically) E(rasable) P(rogrammable) R(ead) O(nly) M(emory)] A type of ROM in which stored data can be erased and reprogrammed. This is accomplished using a special control lead connected to the EEPROM chip and can be done without having to remove the EEPROM chip from the device in which it is mounted.

electrical noise Electric 'static' that can disturb electronic communications. The 'snow' that can appear on a TV screen is an example of the effects of electrical noise.

EPROM [E(rasable) P(rogrammable) R(ead) O(nly) M(emory)] A type of ROM in which stored data can be erased, by ultraviolet light or other means, and reprogrammed.

Expansion I/O Unit An I/O Unit for a Package-type PC that provides more I/O points to the PC.

factory computer A general-purpose computer, usually quite similar to a business computer, that is used in automated factory control.

flag A bit that is turned ON and OFF automatically by the system in order to provide status information.

High-speed Counter A Special I/O Unit. A High Speed Counter Unit counts independently of the PC's cycle time. This allows counting of very short, fast signals.

host computer A computer that is used to transfer data to or receive data from a PC in a Host Link system. The host computer is used for data management and overall system control. Host computers are generally small personal or business computers.

IBM PC/AT or compatible A computer that has similar architecture to, and is logically compatible with an IBM PC/XT computer; and that can run software designed for that computer.

instruction line A succession of instructions which begins with a load instruction at the left bus bar and ends at a right bus bar.

interface An interface is the conceptual boundary between systems or devices and usually involves changes in the way the communicated data is represented. Interface devices such as NSBs perform operations such as changing the coding, format, or speed of data.

I/O devices The devices which are connected to the terminals on I/O Units, Special I/O Units, or Intelligent I/O Units. I/O devices may be part of the Control System if they function to help control other devices, or they may be part of the controlled system if they interact directly with it.

I/O point The place at which an input signal enters the PC System or an output signal leaves the PC System. In physical terms, an I/O point corresponds to terminals or connector pins on a Unit; in terms of programming, an I/O point corresponds to an I/O bit in the IR area.

I/O table Diagram written to the IR memory area listing the type of I/O units controlled by a PC. It must be cleared before programming or when I/O units are changed. Tables can be read, verified, or transferred to a EPROM.

I/O Unit The most basic type of Unit mounted to a Backplane. I/O Units include Input Units and Output Units, each of which is available in a range of specifications. I/O Units do not include Special I/O Units, Link Units, etc.

Limit Switch A switch that detects when an object has reached the limit of its movement by actually making contact with the object. Limit Switches are fitted to electric elevators, traveling cranes, etc. to indicate when a certain part of the equipment has traveled to the specified limit.

Link Unit Any of the Units used to connect a PC to a Link System. These are Remote I/O Units, I/O Link Units, PC Link Units, Host Link Units, and Net Link Units.

operating mode The Display Terminal Unit can operate in five different modes: Page Read, Terminal. Dynamic Scan, Read/Write, and Self-Diagnosis.

page One complete Display Terminal Unit screen. Two hundred screens can be stored on one RAM card.

parallel interface The parallel interface uses the RS-232 connector, but is not serial communication. When parallel mode is selected as the communication mode, up to 16 Display Terminal Units can be connected to a PC in parallel.

PC An acronym for Programmable Controller.

PCB An acronym for printed circuit board.

PC Link Unit A Unit used to connect two or more PCs together so that they can exchange data through their LR areas.

Photoelectric Switch A switch that uses light to detect the presence of an object.

Power Supply A Unit that mounts to a Backplane in a Rack PC. It provides power at the voltage required by the other Units on the Rack.

printed circuit board A board onto which electrical circuits are printed for mounting into a computer or electrical device.

Programmable Controller A small, computer-like device that can control peripheral equipment, such as an electric door or quality control devices, based on programming and peripheral input devices. Any process that can be controlled using electrical signals can be controlled by a PC. PCs can be used independently or networked together into a system to control more complex operations.

programming device A peripheral device used to write programs and to input a program to a PC or to alter or monitor a program already stored in the PC. There are dedicated pro-

gramming devices, such as Programming Consoles, and there are non-dedicated programming devices, such as a host computer.

PROM [P(rogrammable) R(ead) O(nly) M(emory)] A type of ROM into which the program or data may be written after manufacture, by a customer, but which is fixed from that time on.

PROM Writer A PROM Writer is a device used to write data to ROM, PROM, and EPROM storage chips.

Proximity Switch A switch that uses magnetic induction to measure the distance of a metallic object from the front of the switch.

Rack PC A PC that is composed of Units mounted to one or more Racks. This configuration is the most flexible, and most large PCs are Rack PCs. A Rack PC is the opposite of a Package-type PC, which has all of the basic I/O, storage, and control functions built into a single package.

RAM [R(andom) A(ccess) M(emory)] RAM will not retain data when power is disconnected. Therefore data should not be stored in RAM.

register/registered Storing text and graphics in the RAM/ROM card from a personal computer or the ASCII Unit. Graphics that have been written to the RAM/ROM card are referred to as registered messages.

Remote I/O Unit A Unit that extends the distance an Expansion I/O Unit can be from the CPU Unit.

ROM [R(ead) O(nly) M(emory)] A type of digital storage that cannot be written to. A ROM chip is manufactured with its program or data already stored in it, and it can never be changed. However, the program or data can be read as many times as desired.

switching capacity The voltage/current that relay can switch ON and OFF.

stepping motor An output device that rotates according to signals from the Control System. The rotation is very precise and occurs in pre-defined “steps.”

switch An input device that sends either an ON or OFF signal to the Control System. A switch can be operated either by a person or by the movement of a piece of equipment or material.

system configuration The arrangement in which Units in a System are connected. This term refers to the conceptual arrangement and wiring together of all the devices needed to comprise the System. In OMRON terminology, system configuration is used to describe the arrangement and connection of the Units comprising a Control System that includes one or more PCs.

Unit In OMRON PC terminology, the word Unit is capitalized to indicate any product sold for a PC System. though most of the names of these products end with the word Unit, not all do, e.g., a Remote Terminal is referred to in a collective sense as a Unit. Context generally makes any limitations of this word clear.

watchdog timer A special timer inside the CPU Unit that monitors the PC’s cycle time. The watchdog timer sets a flag if the cycle time becomes longer than a certain specified value. This is useful if the correct operation of your System depends on a certain maximum cycle time.

word In digital circuits, a group of bits. Usually a word consists of four, eight, or sixteen bits. In C-series PCs, a word consists of sixteen bits. Words can be used to store data, or they can be used for I/O.

work bits Bits in the IR area that are not being used for input or output. These bits can be used in the program in any way desired.

Index

A

ambient temperature, 51

Analog Timer Unit
  dimensions, 227
  specifications, 200

applications, precautions, xviii

assembly, I/O Units, 58

B

B7A Interface Unit, dimensions, 226

B7A Interface Units
  dimensions, 226
  Group-2 Units, 204

B7A Link Terminals, 205

Backplane Insulation Plate, 55

battery, Memory Unit, replacement, 93

C

contact protection circuit, 138

control components, 2

Control System, 2

cooling, fan, 50

CPU Unit
  components, 14
  Memory Cassettes, 17

current consumption, 215, 219
  5-V supply, 217, 218

CX-Programmer, 32

cycle, 6

cycle time, 6

D

dimensions, 213, 221, 222, 223

duct work
  I/O wiring, 78
  power cables, 78

E

EC Directives, precautions, xx

electrical noise, 76

electrostatic charge, 50

errors
  CPU Rack, 86
  Expansion I/O Rack, 86
  Input Unit, 87
  Output Unit, 88

F

factory computer, 2

G

grounding
  ground terminal, 69
  line ground terminal, 69
  wire, 69

Group-2 High-density I/O Units, 27
  C-shape, 28
  D-shape, 29
  dimensions, 227

H

High-density I/O Units, 30
  dimensions, 227
  limitations, 184, 197
  specifications, 171

humidity, 50

I

I/O Unit Cover, 72

I/O Units
  Group-2 High-density I/O Units, 27
  High-density I/O Units, 30
  Standard I/O Units, 25

inductive load surge suppressor, 77

input devices, 4

installation
  environment
    ambient conditions, 50
    cooling, 50
    cooling fan, 51
    Rack clearance, 50
  precautions, xviii

interlock circuit, 78

Interrupt Input Unit, dimensions, 226

L

leakage current
  input, 73
  output, 75

limit switch, 4

M

Memory Cassette, 17
installing, 61

models, C200HS, 97

mounting
conditions, 33
Racks, conduit, 51

mounting requirements, 60
DIN track mounting, 55
DIN track mounting bracket, 56
procedure, 56

O

one-to-one link, wiring, 120

operating environment, precautions, xvii

output devices, 4

P

PC
block diagram, 5
flowchart, 7
operation, 5
role of, 4

PCs, cooling, 50

photoelectric switch, 4

power consumption, 215, 219

power interruptions, Programmable Controller, 79

precautions
applications, xviii
general, xv, xvi
operating environment, xvii
safety, xvi

process control computer, 2

Programming Console
checking initial operation, 84
Hand-held, 3

proximity switch, 4

R

relay, printed circuit board, 92

relays, Output Unit, replacement, 90

RS-232C, port specifications, 119

RS-232C port
connecting devices, one-to-one link, 120
specifications, 119, 120
wiring example, 119

S

safety precautions. *See* precautions

servomotor drivers, 3

servomotors, 3, 5

short-circuit protection, 75

short-circuit protection, 148

solenoid, 5

Special I/O Units, 33

specifications
C200H-ID501, 171
C200H-IA121, 124
C200H-IA122, 125
C200H-IA122V, 125
C200H-IA221, 126
C200H-IA222, 127
C200H-IA222V, 127
C200H-ID211, 122, 155
C200H-ID212, 123
C200H-ID215, 173
C200H-ID216, 157
C200H-ID217, 158
C200H-ID218, 160
C200H-ID219, 161
C200H-IM211, 128
C200H-IM212, 129
C200H-MD115 (dynamic), 190
C200H-MD115 (static), 188
C200H-MD215 (dynamic), 194
C200H-MD215 (static), 192
C200H-MD501 (dynamic), 186
C200H-MD501 (static), 184
C200H-OA122-E, 149
C200H-OA221, 151
C200H-OA222V, 152
C200H-OA223, 153
C200H-OA224, 154
C200H-OC221, 130
C200H-OC222, 131
C200H-OC222N, 135
C200H-OC222V, 135
C200H-OC223, 133
C200H-OC224, 134
C200H-OC224N, 137
C200H-OC224V, 137
C200H-OC225, 132
C200H-OC226, 136
C200H-OC226N, 136
C200H-OD211, 141
C200H-OD212, 142
C200H-OD213, 143
C200H-OD214, 144
C200H-OD215 (dynamic), 181
C200H-OD215 (static), 179
C200H-OD216, 146
C200H-OD217, 147
C200H-OD218, 162
C200H-OD219, 166
C200H-OD21A, 148
C200H-OD21B, 170
C200H-OD411, 140
C200H-OD501 (dynamic), 177

C200H-OD501 (static), 175
C200HS-INT01, 198
C200H-TM001, 200
Contact Output Unit, life expectancy, 138
Group-2 B7A Interface Units, 204
High-density I/O Units, 171
Standard I/O Units, 122

Standard I/O Units, 25
A-shape, 26
B-shape, 26
dimensions, 224
E-shape, 26
specifications, 122

static electricity, preventing, 50

stepping motor, 5

surge current, output, 76

SYSMAC LINK, 40

SYSMAC NET Link, 41

system configuration, 3

T

terminal block, 71

transistor output, residual voltage, 75

W

wiring
AC Input Units, 73
DC Input Units, 72
power supply, 63

Revision History

A manual revision code appears as a suffix to the catalog number on the front cover of the manual.

Cat. No. W302-E1-15

Revision code

The following table outlines the changes made to the manual during each revision. Page numbers refer to the previous version.

Revision code	Date	Revised content	
1	June 1996	Original production	
2	March 1997	Relay Output Units changed to Contact Output Units throughout the manual. **Page 11:** 64-point Units column added to the second table in *CPU Units*. **Pages 20, 22, 82, 98, 111, 177:** C200H-OC222V, C200H-OC224V, and C200H-OC226 Contact Output Units added. **Page 21:** Note on C200H-OC226 dimensions added. **Page 23:** The settings corrected for *I/O Number Setting Switch* at the bottom of page. **Page 42:** *Ambient Conditions* precautions replaced. **Page 43:** Note on tightening torque added. **Page 50:** Note 3 corrected. **Pages 54, 56:** Crimp terminals information corrected.	**Pages 55, 56:** Crimp terminals information corrected. EC Directives information added. **Page 57:** Tightening torque information added. **Page 59:** Contact output circuit corrected. **Pages 76 to 78:** Output Unit Relay and Output Units added to the procedure. **Page 85:** Relay added to *Optional Products*. **Page 93:** Output capacity corrected in the table. **Page 96:** Connector models corrected. **Page 112:** New Contact Output Units reflected. **Pages 116, 117, 122:** Circuit configurations corrected for C200H-OD212, C200H-OD213, and C200H-OD21A. **Page 182:** C200H-OC226 dimensions added.
3	August 1997	Added the ZE-version C200HX/HG/HE CPU Unit to Section 2, Appendix A, and Appendix B. **Pages 17, 18, 54, 58:** AC input terminal information	corrected and added to. **Page 70:** Note on cycling the power supply added to the procedure.
4	October 1997	**Page 11, 19. 57, 85, 185:** Added C200HW-PA204R. **Page 16:** "KB" corrected to "K words" in the table. **Page 18:** Addition to first paragraph in *2-2-4 Power Supply Units*. Information on AC input terminals in the diagram corrected. **Page 19:** Added sentence on power consumption restrictions and tables on CPU Units and Backplanes for C200HW-PA204R. **Page 41, 86, 188:** Added Controller Link Unit and PC Card Unit. **Page 56:** Corrections and additions made to the note in the diagram.	**Page 56, 101/102:** Added information on 24-VDC output. **Page 92:** Added CompoBus/S and CompoBus/D Master Units. **Page 101:** Separated output capacities and added specifications for RUN output. Enclosure rating corrected. **Page 123:** Graphs corrected. **Page 196:** Analog Timer Unit and Group-2 High-density I/O Units dimensions corrected.
5	June 2000	**Page xii to xiv:** Major changes made to safety information. **Pages 11, 12, 13, 19, 20, 48, 49, 59, 61, 89, 90, 91, 103, 189, 196, 201:** Information related to Power Supply Units and/or Backplanes added/changed. **Page 15:** Information on DIP switch pin 5 changed. **Pages 22, 92:** Information on Triac Output Units added/changed. **Pages 24, 26, 93, 191:** Information related to Group-2 High-density I/O Units added. **Pages 30, 94, 192:** Information on Position Control Units and/or Motion Control Units added. **Page 40:** Information on the number of mountable Master I/O Units added. **Page 47:** Minor change to graphic. **Page 62:** Power consumption value in first line changed from 50 to 40.	**Page 67:** Precautionary information added. **Page 71:** One sentence added to information on power interruptions. **Page 78:** Information added to table. **Page 81:** Information on Output Units added. **Page 95:** Information on Voice Unit added. **Pages 105, 137:** Changes made in several places. **Page 106:** Information on RUN output added. **Page 107:** Changes made to bit addresses. **Page 147:** Information on DC Input Units added. **Pages 148, 150, 159, 161, 169, 171:** Circuit configuration graphics and information on manufacturing numbers added. **Pages 149, 151, 162, 170, 171:** Notes added. **Page 151:** Information on Transistor Output Units added. **Page 180:** Information on B7A Interface Units added.
6	January 2001	**Page 12:** Note added after table.	
07	November 2001	**Page xiv:** Memory Units changed to Memory Cassettes and Power Supply Units added to the precaution item for turning OFF the power supply. **Page 29:** I/O number setting changed for two 40-pin	connectors. **Page 77:** Power interruption duration changed. **Page 146:** Note changed to clarify indicator conditions.
08	February 2003	"CompoBus/D" was globally changed to "DeviceNet." **Page 21:** "NC" added to top left illustration. **Pages 25, 27, 98, 119, and 207:** "N" added to model numbers and/or model numbers added. **Page 31:** Section *2-3-2* replaced with section on CX-Programmer. **Pages 68, 88, and 91:** Note added. **Pages 77 and 86:** Information added on Antinoise Insulating Attachment. **Pages 133 to 135:** Model numbers added and relay specifications changed. (Index entries also added for new model numbers.)	

Revision code	Date	Revised content
09	June 2003	The following corrections and changes were made. **Page 113:** Voltage at bottom right of table changed to “1,000.” **Page 135:** Note added. **Pages 140, 160, 161, 164, 171, 173, 174, 176, 178, 179, 181, 182, 184, and 186:** Circuit configurations added for new versions of Units. **Page 167:** “At 24 VDC...” removed.
10	July 2004	The following corrections and changes were made. **Pages xv and xvi:** *Conformance to EC Directives* replaced. **Pages 12, 28, and 204 :** Notes added. **Page 21:** Terminal labels added. **Page 23:** Manufacturing number diagram changed. **Page 27:** Model number corrected at bottom of page. **Pages 120 and 126:** Voltages for ON response time and OFF response time changed. **Page 72:** Model number added at bottom of page. **Pages 95 and 213:** Currents for Power Supply Units changed in four locations. **Page 17 and 18:** Pages replaced. **Page 146:** Maximum output current added. **Page 165:** Manufacturing number corrected above bottom graphic. **Page 199:** Information added at bottom of page. **Page 215:** Current corrected for C200H-OC222N.
11	January 2005	Information on the Power Supply Unit with Replacement Notification was added.
12	September 2005	The following changes and corrections were made. **Pages 11, 13, 20, 98, 115, 116, 117, and 215:** Information on C200HW-PD-025 Power Supply Units added to table. **Pages 20, 118, and 235:** Note added. **Pages 21, 68, and 223:** Information on C200HW-PD-025 Power Supply Units added to graphic. **Pages 22, 69, and 215:** Information on C200HW-PD-025 Power Supply Units added. **Pages 116 and 117:** Note references corrected.
13	March 2010	**Page ix:** Description of appendix F added. **Page xvii:** Second paragraph changed. **Page xix:** First paragraph changed and ”(This including changing the startup operating mode.) ” added in middle of page. **Pages 11 and 13:** Top table changed. **Page 13:** Note added. **Page 16:** DIP switch figure changed and note under table changed. **Page 20:** Table changed. **Page 21:** Text in figures changed and model numbers added at bottom of page. **Pages 37, 102, and 219:** Information on Fuzzy Logic Unit removed. **Pages 63 and 64:** Model restrictions added to labels in figure. **Page 64:** Model numbers added at bottom of page. **Page 65:** Model numbers added at top of page. **Pages 90, 94, 130 to 134, :** Model number corrected in table. **Page 93:** Procedure replaced. **Page 97:** Specifications of C200HW–PA204R changed. **Page 115:** Supply voltage and operating voltage range changed. **Page 138:** Model number changed at top of page. **Page 236:** Information added to sections on startup time and power failure detection voltage, column added in table, and appendix F added.
14	Decemver 2015	**Pages xi to xiv:** Updated contents. **Page 32:** Deleted model number of Host Link Unit in left column. **Page 55:** Added information at bottom of page. **Page 63:** Added information to end of first paragraph in 24-VDC Output. **Page 84:** Changed the contents of the second row of the right column. **Page 110:** Added information above the I/O Brackets row. **Page 113:** Corrected four cells in the inrush current row. **Page 117:** Removed model numbers from figure. **Page 118:** Made five changes in first two tables and changed callouts at bottom of figure.

Revision code	Date	Revised content
15	February 2016	**Page 91:** Added note toward bottom of page.

November 2020
Omron Corporation

Information on correction

Thank you for your patronage of OMRON products.
There was an error in the description of the write voltage, access speed and ROM type of ROM-JD-B and ROM-KD-B described in this file.
We sincerely apologize for providing incorrect information.
We apologize for the inconvenience, but please use the corrected parts as follows.
In November 2020, only this content was corrected.

1. Applicable model number: **ROM-JD-B and ROM-KD-B**
Corrections: **Write voltage, Access speed and ROM type**

Corrected the write voltage, access speed and ROM type of ROM-JD-B and ROM-KD-B

<Original>

Model	Write voltage	Access speed	ROM type
ROM-JD-B	12.5 V	150 ns	27256
ROM-KD-B			27512

<Corrected>

Model	Write voltage	Access speed	ROM type
ROM-JD-B	12.75 V	120 ns	27C256
ROM-KD-B		90 ns	27C512

OMRON Corporation **Industrial Automation Company**
Kyoto, JAPAN
Contact: www.ia.omron.com

Regional Headquarters
OMRON EUROPE B.V.
Wegalaan 67-69, 2132 JD Hoofddorp
The Netherlands
Tel: (31)2356-81-300/Fax: (31)2356-81-388

OMRON ELECTRONICS LLC
2895 Greenspoint Parkway, Suite 200
Hoffman Estates, IL 60169 U.S.A.
Tel: (1) 847-843-7900/Fax: (1) 847-843-7787

OMRON ASIA PACIFIC PTE. LTD.
No. 438A Alexandra Road # 05-05/08 (Lobby 2),
Alexandra Technopark,
Singapore 119967
Tel: (65) 6835-3011/Fax: (65) 6835-2711

OMRON (CHINA) CO., LTD.
Room 2211, Bank of China Tower,
200 Yin Cheng Zhong Road,
PuDong New Area, Shanghai, 200120, China
Tel: (86) 21-5037-2222/Fax: (86) 21-5037-2200

Authorized Distributor:

© OMRON Corporation 1996-2016 All Rights Reserved.
In the interest of product improvement,
specifications are subject to change without notice.

Cat. No. W302-E1-15 1120