Ultracompact, Ultrathin Photoelectric Sensor with Built-in Amplifier

E3T-□-UL

CSM_E3T-_-UL_DS_E_2_1

The lineup has been expanded to E3T series with UL certified products

- UL certification (UL60947-5-2) and CSA certification (CSA-C22.2 No.60947-5-2)
- The series includes Through-beam, Long-distance (2 m) Sensors (E3T-ST3□-UL).
- Easy installation with M3-mounting Sensors (E3T-ST□□M-UL and E3T-FD□□M-UL).

⚠ **Be sure to read *Safety Precautions* on page 15.**

For the most recent information on models that have been certified for safety standards, refer to your OMRON website.

Lineup Overview

Appearance		Sensing method	Through-beam	Retroreflective	Diffusereflective	Limitedreflective	BGS reflective
Rectangular type	Side-view	M2-mounting	●	●	---	●	---
		M3-mounting	●	---	---	---	---
	Flat	M2-mounting	●	---	●	---	●
		M3-mounting	---	---	●	---	---

Ordering Information

Sensors [Refer to Dimensions on page 16.]

M2-mounting Sensors

A set of mounting screws is included with the Sensor.

Red light

Sensing method	Appearance	Sensing distance	Operation mode	Model	
				NPN output	PNP output
Through-beam (Emitter + Receiver)		2 m (Sensitivity Adjustment Unit can be used.)	Light-ON	**E3T-ST31-UL 2M**	**E3T-ST33-UL 2M**
			Dark-ON	**E3T-ST32-UL 2M**	**E3T-ST34-UL 2M**
		1 m (Sensitivity Adjustment Unit can be used.)	Light-ON	**E3T-ST11-UL 2M**	**E3T-ST13-UL 2M**
			Dark-ON	**E3T-ST12-UL 2M**	**E3T-ST14-UL 2M**
		300 mm	Light-ON	**E3T-ST21-UL 2M**	**E3T-ST23-UL 2M**
			Dark-ON	**E3T-ST22-UL 2M**	**E3T-ST24-UL 2M**
		500 mm	Light-ON	**E3T-FT11-UL 2M**	**E3T-FT13-UL 2M**
			Dark-ON	**E3T-FT12-UL 2M**	**E3T-FT14-UL 2M**
		300 mm	Light-ON	**E3T-FT21-UL 2M**	**E3T-FT23-UL 2M**
			Dark-ON	**E3T-FT22-UL 2M**	**E3T-FT24-UL 2M**
Retroreflective		Using the E39-R4 Reflector provided 200 mm (30 mm) ✻1 Using the E39-R37-CA 100 mm (10 mm) ✻1	Light-ON	**E3T-SR41-UL 2M**	**E3T-SR43-UL 2M**
			Dark-ON	**E3T-SR42-UL 2M**	**E3T-SR44-UL 2M**
Diffusereflective		5 to 30 mm	Light-ON	**E3T-FD11-UL 2M**	**E3T-FD13-UL 2M**
			Dark-ON	**E3T-FD12-UL 2M**	**E3T-FD14-UL 2M**
Limitedreflective		5 to 15 mm	Light-ON	**E3T-SL11-UL 2M**	**E3T-SL13-UL 2M**
			Dark-ON	**E3T-SL12-UL 2M**	**E3T-SL14-UL 2M**
		5 to 30 mm	Light-ON	**E3T-SL21-UL 2M**	**E3T-SL23-UL 2M**
			Dark-ON	**E3T-SL22-UL 2M**	**E3T-SL24-UL 2M**
BGS reflective		1 to 15 mm	Light-ON	**E3T-FL11-UL 2M**	**E3T-FL13-UL 2M**
			Dark-ON	**E3T-FL12-UL 2M**	**E3T-FL14-UL 2M**
		1 to 30 mm	Light-ON	**E3T-FL21-UL 2M**	**E3T-FL23-UL 2M**
			Dark-ON	**E3T-FL22-UL 2M**	**E3T-FL24-UL 2M**

M3-mounting Sensors

A set of mounting screws is not included with the Sensor. Order a Screw Set separately if required.

Sensing method	Appearance	Sensing distance	Operation mode	Model	
				NPN output	PNP output
Through-beam (Emitter + Receiver)		1 m	Light-ON	**E3T-ST11M-UL 2M**	**E3T-ST13M-UL 2M**
			Dark-ON	**E3T-ST12M-UL 2M**	**E3T-ST14M-UL 2M**
		300 mm	Light-ON	**E3T-ST21M-UL 2M**	**E3T-ST23M-UL 2M**
			Dark-ON	**E3T-ST22M-UL 2M**	**E3T-ST24M-UL 2M**
Diffusereflective		5 to 30 mm	Light-ON	**E3T-FD11M-UL 2M**	**E3T-FD13M-UL 2M**
			Dark-ON	**E3T-FD12M-UL 2M**	**E3T-FD14M-UL 2M**

✻1. Values in parentheses indicate the minimum required distance between the Sensor and Reflector.

Accessories (Order Separately)

Accessories for M2-mounting Sensors

These accessories are not included with the Sensor. Order them separately if required.

Name		Applicable Sensor	Model	Quantity	Dimensions page	Remarks
Slit for Through-beam Side-view Sensors	0.5 dia.	E3T-ST3□□	**E39-S63**	2 (One each for Emitter and Receiver; common with Slit widths of 1 dia. and 0.5 dia.)	20	Sensing distance 200 mm, Minimum detectable object (reference value) 0.5-mm dia.
		E3T-ST1□□				Sensing distance 100 mm, Minimum detectable object (reference value) 0.5-mm dia.
		E3T-ST2□□				Sensing distance 30 mm, Minimum detectable object (reference value) 0.5-mm dia.
	1 dia.	E3T-ST3□□				Sensing distance 600 mm, Minimum detectable object (reference value) 1-mm dia.
		E3T-ST1□□				Sensing distance 300 mm, Minimum detectable object (reference value) 1-mm dia.
		E3T-ST2□□				Sensing distance 100 mm, Minimum detectable object (reference value) 1-mm dia.
Slit for Through-beam Flat Sensors	0.5 dia.	E3T-FT1□□	**E39-S64**			Sensing distance 50 mm, Minimum detectable object (reference value) 0.5-mm dia.
		E3T-FT2□□				Sensing distance 30 mm, Minimum detectable object (reference value) 0.5-mm dia.
	1 dia.	E3T-FT1□□				Sensing distance 100 mm, Minimum detectable object (reference value) 1-mm dia.
		E3T-FT2□□				Sensing distance 50 mm, Minimum detectable object (reference value) 1-mm dia.
Sensitivity Adjustment Unit for Through-beam Side-view Sensors with Red Light		E3T-ST3□	**E39-E10**	1		Sensing distance (reference value) 1,200 to 1,800 mm
		E3T-ST1□				Sensing distance (reference value) 300 to 800 mm
Mounting Brackets for Side-view Sensors ✻1		E3T-S□□□□	**E39-L116**	1	21	Nut plate provided
			E39-L117			
			E39-L118		22	
Mounting Brackets for Flat Sensors ✻1		E3T-F□□□□	**E39-L119**			---
			E39-L120			
Screw Set for Side-view Sensors ✻2 ✻3		E3T-S□□□□	**E39-L164**	2 for each	---	Material: Iron (Same type as provided with the Sensor.) Contents: Set screws (M2×14), Hexagonal nuts
Screw Set for Flat Sensors ✻2 ✻3		E3T-F□□□□	**E39-L165**			Material: Iron (Same type as provided with the Sensor.) Contents: Set screws (M2×8), Hexagonal nuts
SUS Screw Set for Flat Sensors ✻2		E3T-F□□□□	**E39-L172**	2		Material: SUS304 Contents: Bolt with hexagonal hole (M2×6)
SUS Screw Set for Side-view Sensors ✻2		E3T-S□□□□	**E39-L173**	2 for each		Material: SUS304 Contents: Bolt with hexagonal hole (M2×12), Hexagonal nuts, Spring washers, Flat washers

✻1. When using Through-beam Sensors (E3T-ST□□, E3T-FT□□), order one Bracket for the Emitter and one for the Receiver.
✻2. Order two Sets, one for the Emitter and one for the Receiver, for Through-beam Sensors (E3T-ST□□ or E3T-FT□□).
This is the Screw Set for mounting the Sensor to the Mounting Bracket. Order this Set if you lose the screws. Do not use this Screw Set to mount the Mounting Bracket to the equipment.
✻3. This is included with the Sensor. Order this Set if you lose the screws.

Accessories for M3-mounting Sensors

These accessories are not included with the Sensor. Order them separately if required.

Name		Applicable Sensor	Model	Quantity	Dimensions page	Remarks
Slit for Through-beam Side-view Sensors	0.5 dia.	E3T-ST1□M	**E39-S76A**	2 (One each for Emitter and Receiver)	20	Sensing distance 100 mm, Minimum detectable object (reference value) 0.5-mm dia.
		E3T-ST2□M				Sensing distance 30 mm, Minimum detectable object (reference value) 0.5-mm dia.
	1 dia.	E3T-ST1□M	**E39-S76B**			Sensing distance 300 mm, Minimum detectable object (reference value) 1-mm dia.
		E3T-ST2□M				Sensing distance 100 mm, Minimum detectable object (reference value) 1-mm dia.
Mounting Brackets for Side-view Sensors ✻1		E3T-ST□□M	**E39-L166**	1	23	Nut plate provided
Mounting Bracket for Flat Sensors		E3T-FD□□M	**E39-L167**			---
Back-mounting Spacer for Flat Sensors		E3T-FD□□M	**E39-L168**	1		Use this Spacer when mounting a Flat Sensor (E3T-FD□□M) from the back.
SUS Screw Set for Side-view Sensors ✻2 ✻3		E3T-ST□□M	**E39-L171**	2 for each	---	Material: SUS304 Contents: Bolt with hexagonal hole (M3×15), Hexagonal nuts, Spring washers, Flat washers

✻1. Order one Bracket for the Emitter and one for the Receiver.
✻2. This is the Screw Set for mounting the Sensor to the Mounting Bracket. Order this Set if you lose the screws. Do not use this Screw Set to mount the Mounting Bracket to the equipment.
✻3. Order two Sets, one for the Emitter and one for the Receiver.

Reflectors

(Reflector required for Retroreflective Sensors)
A Reflector is not provided with the Sensor. Be sure to order a Reflector separately.

Name	Applicable Sensor	Model	Quantity	Dimensions page	Remarks
Small Reflectors	E3T-SR4□	**E39-R4 ✻3**	1	19	Sensing distance 200 mm (30 mm) ✻1 Minimum detectable object 2-mm dia.
		E39-R37-CA ✻2			Sensing distance 100 mm (10 mm) ✻1 Minimum detectable object 2-mm dia.
Tape Reflectors		**E39-RS1-CA ✻2**		20	Sensing distance 100 mm (10 mm) ✻1 Minimum detectable object 2-mm dia.
		E39-RS2-CA ✻2			
		E39-RS3-CA ✻2			

✻1. Values in parentheses indicate the minimum required distance between the Sensor and Reflector.
✻2. The E3T-SR4□ cannot be used with the E39-R37 or E39-RS1/2/3 (without CA) Tape Reflectors. The E39-□-CA Reflector is for use only with the E3T-SR4□. It cannot be used with other Sensors.
✻3. This is included with the Sensor. Order if you lose the Small Reflector.

Ratings and Specifications

Item		Sensing method	Through-beam				
		Appearance	Rectangular type (Side-view)			Rectangular type (Flat)	
NPN output	Light-ON		E3T-ST31-UL	E3T-ST11-UL E3T-ST11M-UL	E3T-ST21-UL E3T-ST21M-UL	E3T-FT11-UL	E3T-FT21-UL
	Dark-ON		E3T-ST32-UL	E3T-ST12-UL E3T-ST12M-UL	E3T-ST22-UL E3T-ST22M-UL	E3T-FT12-UL	E3T-FT22-UL
PNP output	Light-ON		E3T-ST33-UL	E3T-ST13-UL E3T-ST13M-UL	E3T-ST23-UL E3T-ST23M-UL	E3T-FT13-UL	E3T-FT23-UL
	Dark-ON		E3T-ST34-UL	E3T-ST14-UL E3T-ST14M-UL	E3T-ST24-UL E3T-ST24M-UL	E3T-FT14-UL	E3T-FT24-UL
Sensing distance			2 m	1 m	300 mm	500 mm	300 mm
Standard sensing object			Opaque, 3-mm dia. min.	Opaque, 2-mm dia. min.		Opaque, 1.3-mm dia. min.	
Minimum detectable object (reference value)			Opaque, 3-mm dia.	Opaque, 2-mm dia.		Opaque, 1.3-mm dia.	
Directional angle			Emitter: 2° to 20° Receiver: 2° to 70°			Emitter: 3° to 25° Receiver: 3° min.	
Light source (wavelength)			Red LED (650 nm)				
Power supply voltage			12 to 24 VDC ±10%, ripple (p-p) 10% max. Class 2				
Current consumption			Emitter 10 mA max., Receiver 20 mA max.				
Control output			Load power supply voltage: 26.4 VDC max. Class 2 Load current: 50 mA max. (residual voltage: 2 V max. for load current of 10 to 50 mA, 1 V max. for load current of less than 10 mA), Off-state current: 10 μA max. Open collector output				
Indicators			Operation indicator (orange), Stability indicator (green)				
Protection circuits			Power supply and control output reverse polarity protection, Output short-circuit protection				
Response time			Operate or reset: 1 ms max.				
Ambient illumination			Incandescent lamp: 5,000 lx max., Sunlight: 10,000 lx max.				
Ambient temperature range			Operating: -25 to 55°C Storage: -40 to 70°C (with no icing or condensation) ✻2				
Ambient humidity range			Operating: 35% to 85% Storage: 35% to 95% (with no condensation)				
Insulation resistance			20 MΩ min. at 500 VDC				
Dielectric strength			1,000 VAC, 50/60 Hz for 1 min.				
Vibration resistance (destruction)			10 to 2,000 Hz, 1.5-mm double amplitude or 300 m/s^2 for 0.5 hours each in X, Y, and Z directions				
Shock resistance (destruction)			1,000 m/s^2 3 times each in X, Y, and Z directions				
Degree of protection			IP67 (IEC 60529)				
Connection method			Pre-wired (standard length: 2 m)				
Weight (packed state)			Approx. 40 g				
Materials	Case		PBT (polybutylene terephthalate)				
	Display window		Denatured polyarylate				
	Lens		Denatured polyarylate				
Conformity standards			CE Marking				
MTTFd (Year)			398				
Accessories ✻1			Instruction manual, Set screws for mounting (Side-view Sensors: M2 × 14, Flat Sensors: M2 × 8), Nuts				

Note: 1. Altitude: Up to 2,000 m, Pollution degree: 3, Enclosure type: Type1.
✻1. Only the Instruction Manual is included with an M3-mounting Sensor (E3T-ST□□M). Order the Set of Mounting Screws separately if required.
✻2. UL temperature rating is 45°C maximum in operation.

Item		Sensing method	Retro-reflective (without M.S.R. function)
		Appearance	Rectangular type (Side-view)
NPN output	Light-ON		E3T-SR41-UL
	Dark-ON		E3T-SR42-UL
PNP output	Light-ON		E3T-SR43-UL
	Dark-ON		E3T-SR44-UL
Sensing distance			200 mm (30 mm) ✻1 (Using the E39-R4) 100 mm (10 mm) ✻1 (Using the E39-R37-CA)
Standard sensing object			Opaque, 27-mm dia. min.
Minimum detectable object (reference value)			2-mm dia. (Sensing distance 100 mm)
Directional angle			2° to 20°
Light source (wavelength)			Red LED (650 nm)
Power supply voltage			12 to 24 VDC ±10%, ripple (p-p) 10% max. Class 2
Current consumption			20 mA max.
Control output			Load power supply voltage: 26.4 VDC max. Class 2 Load current: 50 mA max. (residual voltage: 2 V max. for load current of 10 to 50 mA, 1 V max. for load current of less than 10 mA), Off-state current: 10μA max. Open collector output
Indicators			Operation indicator (orange), Stability indicator (green)
Protection circuits			Power supply and control output reverse polarity protection, Output short-circuit protection, Mutual interference prevention
Response time			Operate or reset: 1 ms max.
Ambient illumination			Incandescent lamp: 5,000 lx max., Sunlight: 10,000 lx max.
Ambient temperature range			Operating: -25 to 55°C Storage: -40 to 70°C (with no icing or condensation) ✻2
Ambient humidity range			Operating: 35% to 85% Storage: 35% to 95% (with no condensation)
Insulation resistance			20 MΩ min. at 500 VDC
Dielectric strength			1,000 VAC, 50/60 Hz for 1 min.
Vibration resistance (destruction)			10 to 2,000 Hz, 1.5-mm double amplitude or 300 m/s^2 for 0.5 hours each in X, Y, and Z directions
Shock resistance (destruction)			1,000 m/s^2 3 times each in X, Y, and Z directions
Degree of protection			IP67 (IEC 60529)
Connection method			Pre-wired (standard length: 2 m)
Weight (packed state)			Approx. 20 g
Materials	Case		PBT (polybutylene terephthalate)
	Display window		Denatured polyarylate
	Lens		Methacrylc resin
MTTFd (Year)			696
Accessories			Instruction manual, Set screws for mounting (Side-view Sensors: M2 × 14), Nuts, Small Reflector (E39-R4)

Note: 1. Altitude: Up to 2,000 m, Pollution degree: 3, Enclosure type: Type1.
✻1. Values in parentheses indicate the minimum required distances between the Sensors and Reflectors.
✻2. UL temperature rating is 45°C maximum in operation.

Item	Sensing method	Diffuse-reflective	Limited-reflective		BGS-reflective	
	Appearance	Rectangular type (Flat)	Rectangular type (Side-view)		Rectangular type (Flat)	
NPN output	Light-ON	E3T-FD11-UL E3T-FD11M-UL	E3T-SL11-UL	E3T-SL21-UL	E3T-FL11-UL	E3T-FL21-UL
	Dark-ON	E3T-FD12-UL E3T-FD12M-UL	E3T-SL12-UL	E3T-SL22-UL	E3T-FL12-UL	E3T-FL22-UL
PNP output	Light-ON	E3T-FD13-UL E3T-FD13M-UL	E3T-SL13-UL	E3T-SL23-UL	E3T-FL13-UL	E3T-FL23-UL
	Dark-ON	E3T-FD14-UL E3T-FD14M-UL	E3T-SL14-UL	E3T-SL24-UL	E3T-FL14-UL	E3T-FL24-UL
Sensing distance		5 to 30 mm	5 to 15 mm	5 to 30 mm	1 to 15 mm	1 to 30 mm
Standard sensing object		White paper: 100 × 100 mm				
Minimum detectable object (reference value)		0.15-mm dia. (sensing distance 10 mm)	0.15-mm dia. (sensing distance 10 mm)		0.15-mm dia. non-glossy object (sensing distance 10 mm)	
Hysteresis (white paper)		6 mm max.	2 mm max.	6 mm max.	0.5 mm max.	2 mm max.
Black/white error		---			15% max.	
Light source (wavelength)		Red LED (650 nm)				
Power supply voltage		12 to 24 VDC ±10%, ripple (p-p) 10% max. Class 2				
Current consumption		20 mA max.				
Control output		Load power supply voltage: 26.4 VDC max. Class 2 Load current: 50 mA max. (residual voltage: 2 V max. for load current of 10 to 50 mA, 1 V max. for load current of less than 10 mA), Off-state current: 10μA max. Open collector output				
Indicators		Operation indicator (orange), Stability indicator (green)				
Protection circuits		Power supply and control output reverse polarity protection, Output short-circuit protection, Mutual interference prevention				
Response time		Operate or reset: 1 ms max.				
Ambient illumination		Incandescent lamp: 5,000 lx max., Sunlight: 10,000 lx max.				
Ambient temperature range		Operating: -25 to 55°C Storage: -40 to 70°C (with no icing or condensation) ✻1				
Ambient humidity range		Operating: 35% to 85% Storage: 35% to 95% (with no condensation)				
Insulation resistance		20 MΩ min. at 500 VDC				
Dielectric strength		1,000 VAC, 50/60 Hz for 1 min.				
Vibration resistance (destruction)		10 to 2,000 Hz, 1.5-mm double amplitude or 300 m/s^2 for 0.5 hours each in X, Y, and Z directions				
Shock resistance (destruction)		1,000 m/s^2 3 times each in X, Y, and Z directions				
Degree of protection		IP67 (IEC 60529)				
Connection method		Pre-wired (standard length: 2 m)				
Weight (packed state)		Approx. 20 g	Approx. 20 g			
Materials	Case	PBT (polybutylene terephthalate)	PBT (polybutylene terephthalate)			
	Display window	Denatured polyarylate	Denatured polyarylate			
	Lens	Denatured polyarylate	Denatured polyarylate			
MTTFd (Year)		696	696		653	
Accessories		Instruction manual, Set screws for mounting (M2 × 14), Nuts ✻2	Instruction manual, Set screws for mounting (M2 × 14), Nuts			

Note: 1. Altitude: Up to 2,000 m, Pollution degree: 3, Enclosure type: Type1.
✻1. UL temperature rating is 45°C maximum in operation.
✻2. Only the Instruction Manual is included with an M3-mounting Sensor (E3T-FD□□M). Order the Set of Mounting Screws separately if required.

Engineering Data (Reference Value)

M2-mounting and M3-mounting Sensors

Parallel Operating Range

Through-beam

E3T-ST3□ + E39-S63

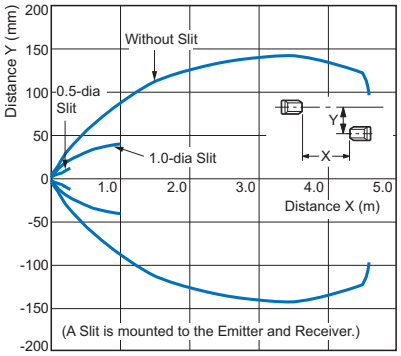

E3T-ST1□ + E39-S63
E3T-ST1□M + E39-S76A/S76B (Overall Diagram)

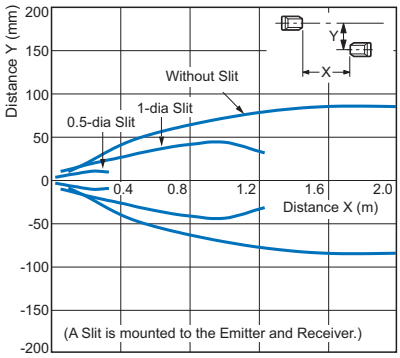

E3T-ST1□ + E39-S63
E3T-ST1□M + E39-S76A/S76B (Enlarged Diagram)

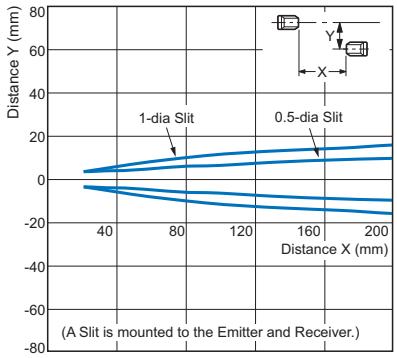

E3T-ST2□ + E39-S63
E3T-ST2□M + E39-S76A/S76B

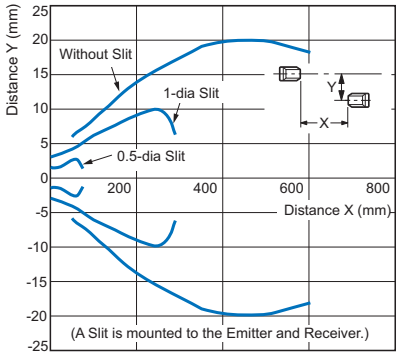

E3T-FT1□ + E39-S64 (Overall Diagram)

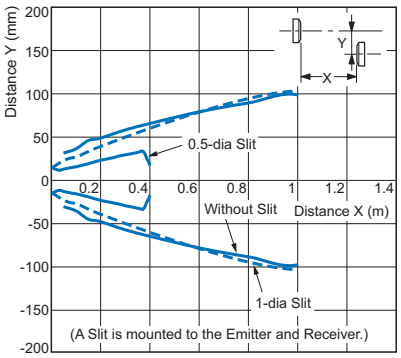

E3T-FT1□ + E39-S64 (Enlarged Diagram)

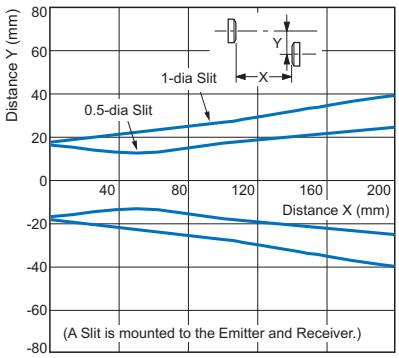

E3T-FT2□ + E39-S64

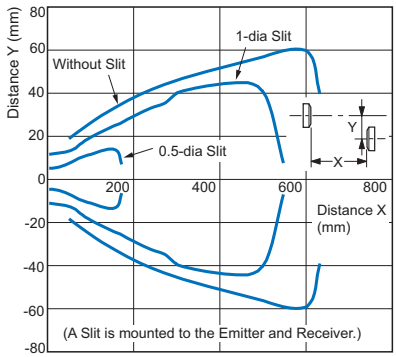

Retro-reflective

E3T-SR4□

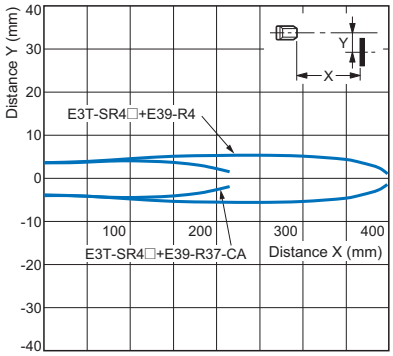

Operating Range

Limited-reflective

E3T-SL1□

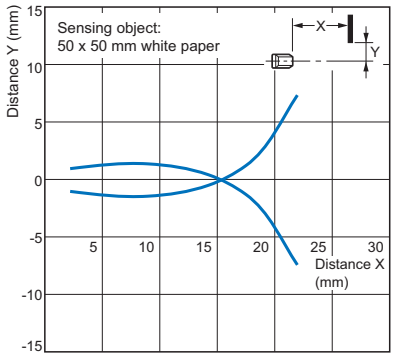

E3T-SL2□

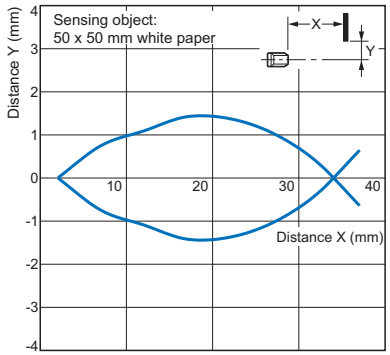

Diffuse-reflective

E3T-FD1□(M)

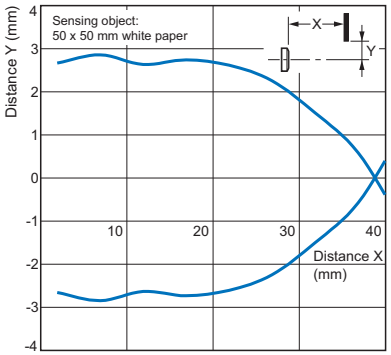

BGS-reflective

E3T-FL1□

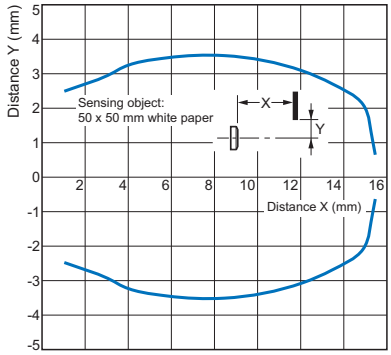

E3T-FL2□

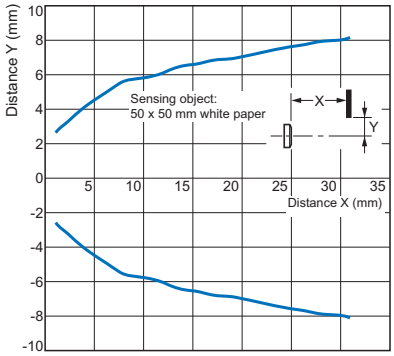

Inclination Detection Area Characteristic

Limited-reflective

E3T-SL1□ (Top to Bottom)

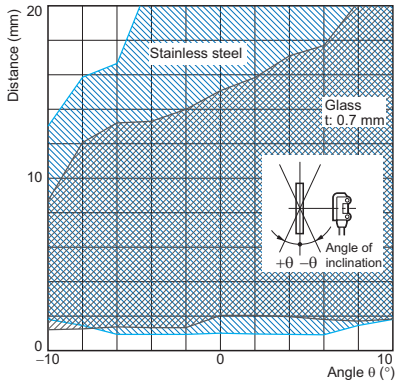

E3T-SL1□ (Right to Left)

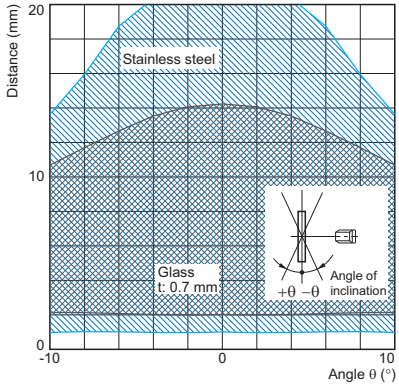

E3T-SL2□ (Top to Bottom)

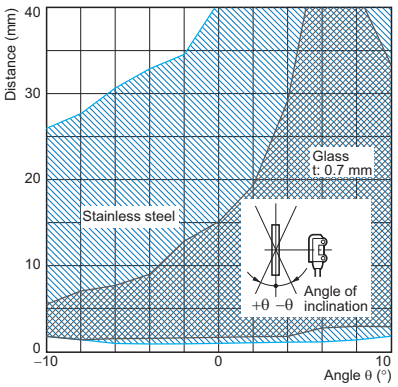

E3T-SL2□ (Right to Left)

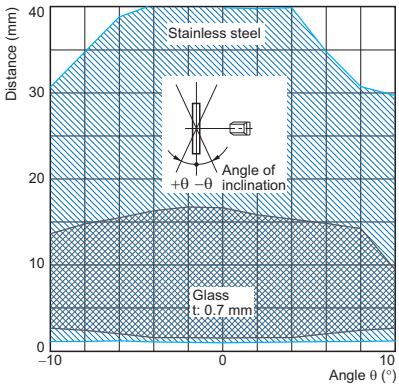

BGS-reflective

E3T-FL1□ (Top to Bottom)

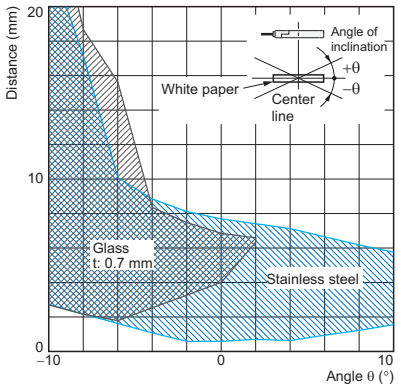

E3T-FL1□ (Right to Left)

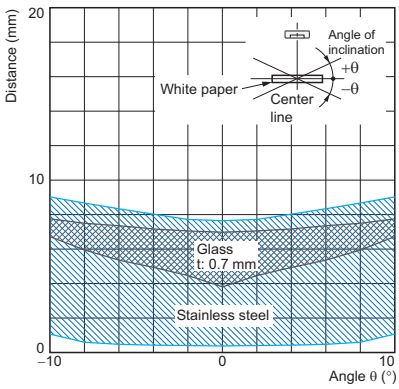

E3T-FL2□ (Top to Bottom)

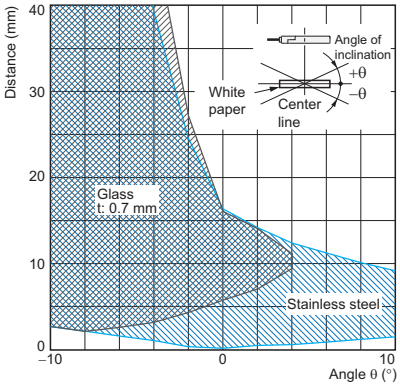

E3T-FL2□ (Right to Left)

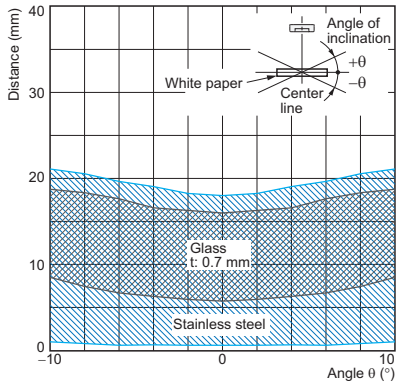

Excess Gain vs. Set Distance

Through-beam

E3T-ST3□

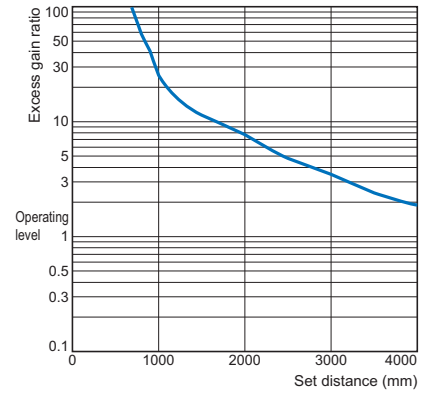

E3T-ST1□(M)

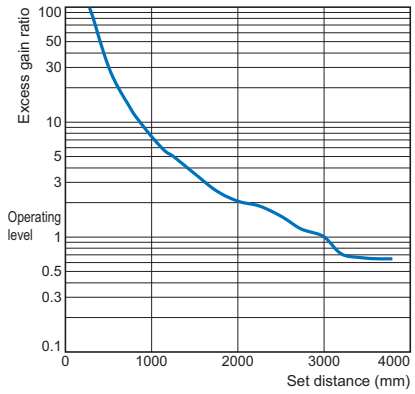

E3T-ST2□(M)

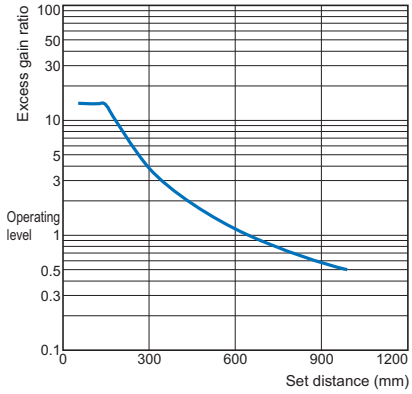

E3T-FT1□

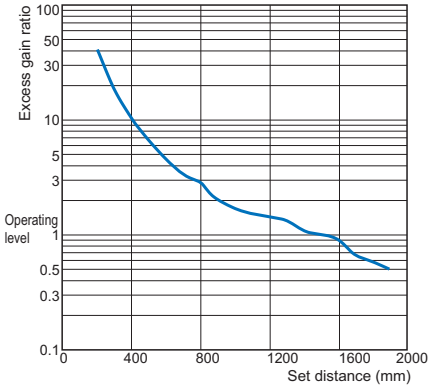

E3T-FT2□

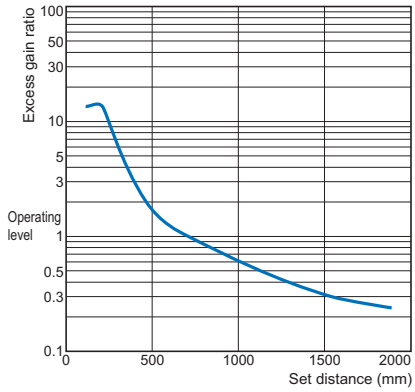

Retro-reflective

E3T-SR4□

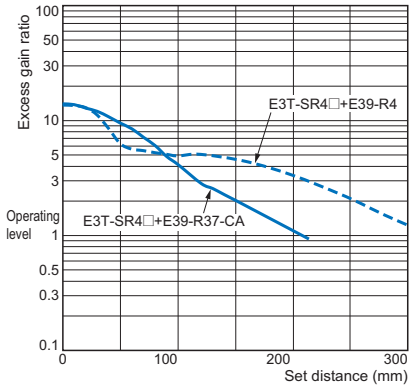

Diffuse-reflective

E3T-FD1□(M)

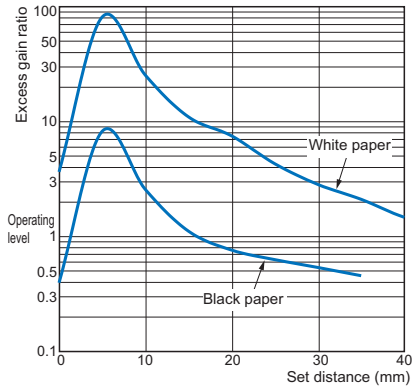

Limited-reflective

E3T-SL1□

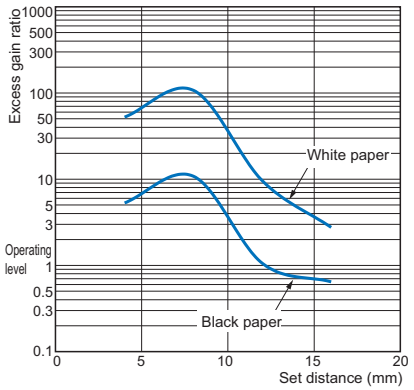

E3T-SL2□

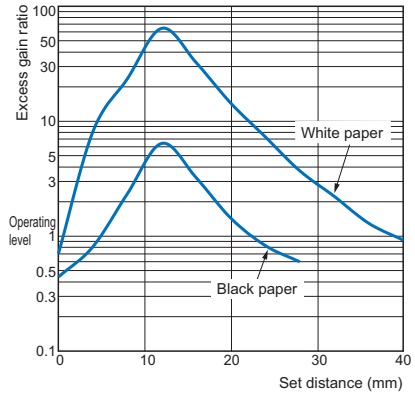

Sensing Object Size vs. Sensing Distance

Limited-reflective

E3T-SL1□

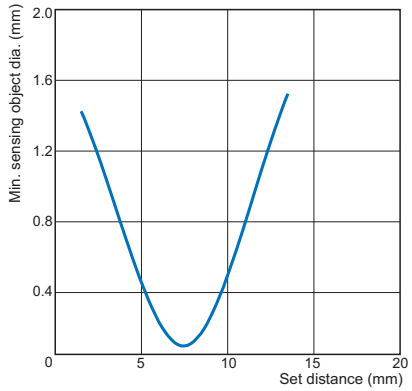

Diffuse/Limited-reflective

E3T-FD1□(M)/E3T-SL2□

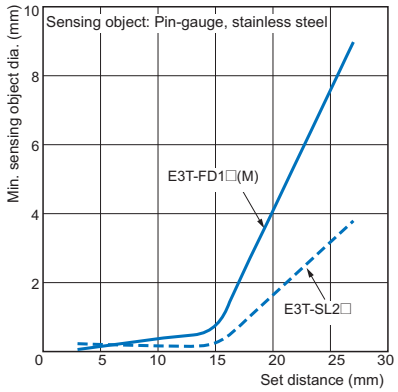

Sensing Distance Characteristics of Sensitivity Adjustment Unit (when Completing Optical Axis Adjustment)

E3T-ST1□ + E39-E10 Sensitivity Adjustment Unit
E3T-ST3□ + E39-E10 Sensitivity Adjustment Unit

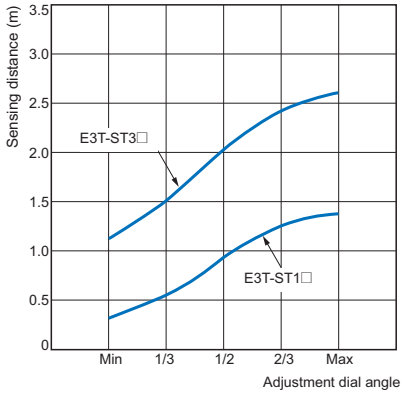

Sensing Distance vs. Material

Limited-reflective

E3T-SL1□

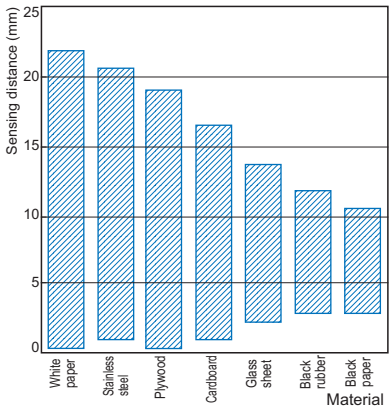

E3T-SL2□

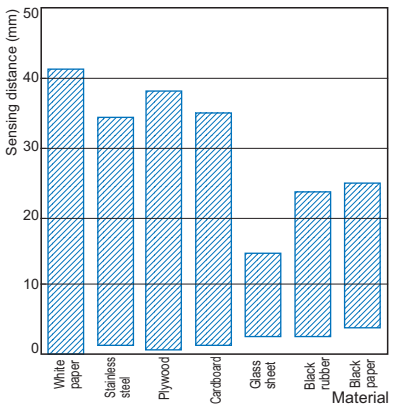

Diffuse-reflective

E3T-FD1□(M)

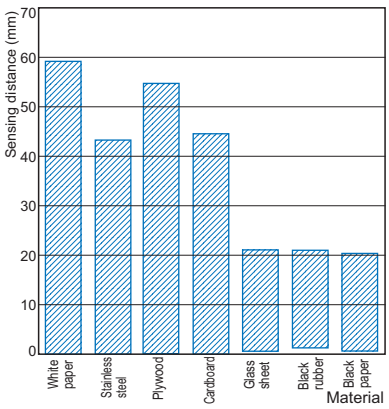

BGS-reflective

E3T-FL1□

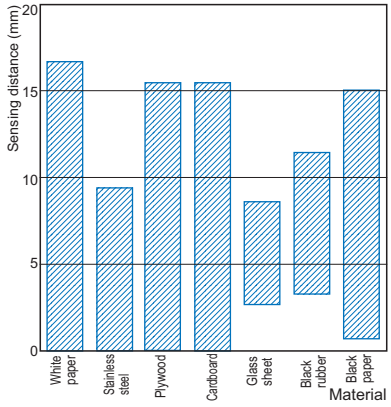

E3T-FL2□

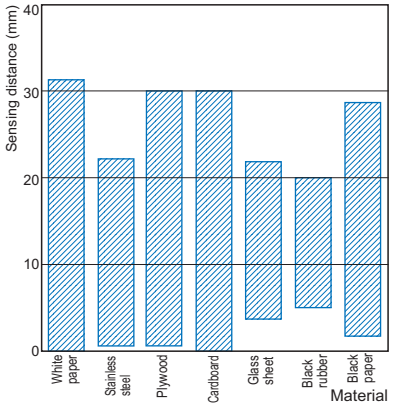

E3T-□-UL

I/O Circuit Diagrams

NPN Output

Model	Operation mode	Timing charts	Output circuit
E3T-□□□1 E3T-□□□1M	Light-ON	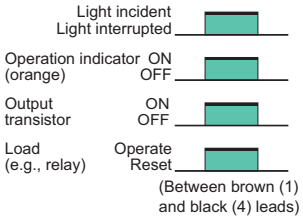	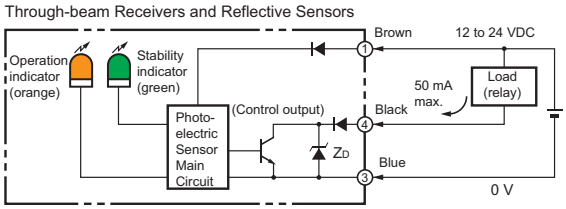
E3T-□□□2 E3T-□□□2M	Dark-ON	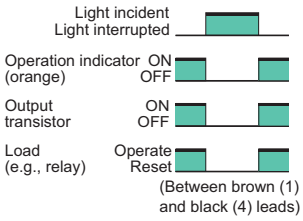	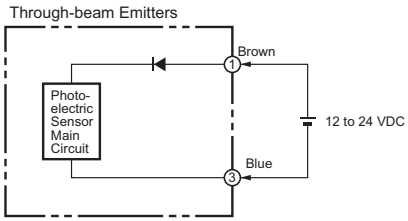

PNP Output

Model	Operation mode	Timing charts	Output circuit
E3T-□□□3 E3T-□□□3M	Light-ON	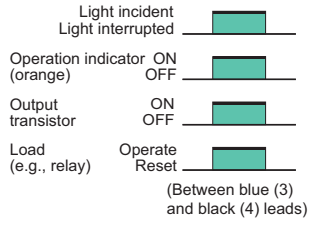	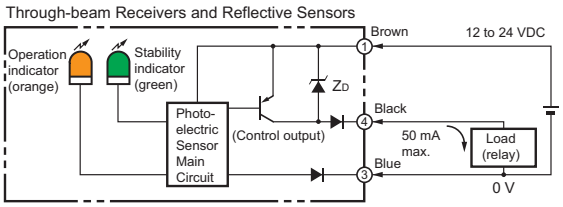
E3T-□□□4 E3T-□□□4M	Dark-ON	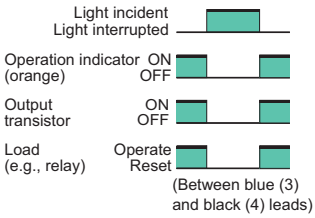	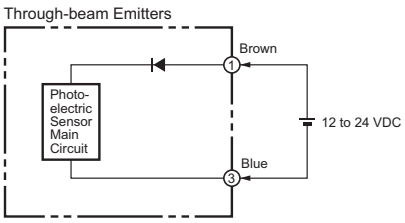

Safety Precautions

Be sure to read the precautions for all models in the website at: http://www.ia.omron.com/.

Warning Indications

⚠ WARNING	**Warning level** Indicates a potentially hazardous situation which, if not avoided, will result in minor or moderate injury, or may result in serious injury or death. Additionally there may be significant property damage.
Precautions for Safe Use	Supplementary comments on what to do or avoid doing, to use the product safely.
Precautions for Correct Use	Supplementary comments on what to do or avoid doing, to prevent failure to operate, malfunction or undesirable effect on product performance.

Meaning of Product Safety Symbols

	General prohibition Indicates the instructions of unspecified prohibited action
	Caution, explosion Indicates the possibility of explosion under specific conditions

⚠ WARNING

This product is not designed or rated for ensuring safety of persons either directly or indirectly.
Do not use it for such purposes.

Never use this product with AC power supply.
Also, do not use the product with voltage in excess of the rated voltage.
These may result in burst or fire.

Precautions for Safe Use

Be sure to follow the safety precautions below for added safety.

1. Do not use the sensor under the environment with explosive or ignition gas.
2. Never disassemble, repair nor tamper with the product.
3. Keep the supply voltage within the specified range.
4. Do not use the sensor over the rated values.
5. When you discard the product, please process at industrial waste.

Precautions for Correct Use

1. Do not use the product under the following conditions.
   - In the place exposed to the direct sunlight.
   - In the place where humidity is high and condensation may occur.
   - In the place where corrosive gas exists.
   - In the place where vibration or shock is directly transmitted to the product.
2. Connection and Mounting
   - Be sure that the supply voltage before making supply is less than the maximum rated supply voltage. (24 VDC+10%)
   - When a power supply for the sensor is switched by mechanical contacts such as relay contacts, take measures against bouncing or chattering of the contacts such as providing approximately 50 μF capacitor across the power line.
   - Routing the wires of the photoelectric sensor with high potential power lines may cause malfunction or damage to it because of the inductive effects.
     Be sure to route the sensor wires separated from the power lines or through an exclusive conduit.
   - For extending wires use a cable 0.3 mm^2 min.,and 100 m max. in length. When using the cable as a Kores's S-mark certified product, use the cable of less than 10 m in length.
   - Do not exceed the following force values applied to the cable.
     Tensile: 40 N max., torque: 0.1 N·m max., pressure: 20 N max., flexure: 3 kg max.
   - Excessive force (hitting by hammer, etc.) should not be put on the photoelectric sensor because they may damage its water-resistive characteristic.
   - Tightening torque
     Mounting with M2 screw 0.15 N·m max.
     Mounting with M3 screw 0.5 N·m max.
3. Cleaning
   Do not use thinner such as alcohol and benzine because it may damage a product.
4. Power supply
   When using a commercially available switching regulator, be sure to ground the FG (Frame Ground) and G (Ground) terminais. If this is not done, failure in operation may happen by switching noise of the regulator.
5. Water-proof
   Though this is type IP67, do not use in the water, rain, or outdoor.
6. Load short circuit protection
   This product is provided with function of load short circuit protection.
   Control output turns off when this function operates. After checking of wiring and load current, make power supply again.
   Then the circuit is reset. Load short circuit protection operates when the current is 1.5 times over than the rated load current. The inrush current should be 1.5 times less than the rated load current when L load is used.
7. Function of this sensor will be stable 100 ms after turning on the power supply.

Dimensions

(Unit: mm)
Tolerance class IT16 applies to dimensions in this datasheet unless otherwise specified.

Sensors

M2-mounting Sensors

Through-beam Side-view Sensors

E3T-ST1□
E3T-ST2□
E3T-ST3□

Emitter

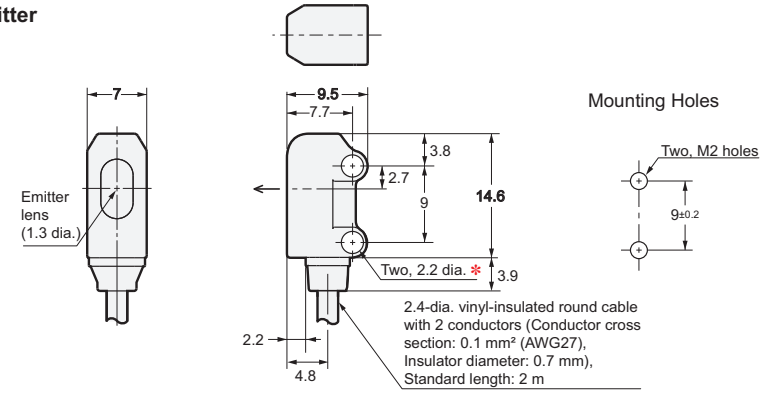

✻ The mounting holes are made of SUS301.

Receiver

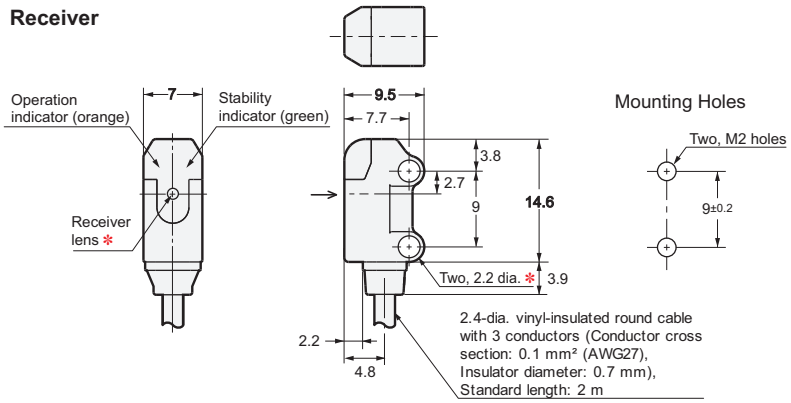

✻ The mounting holes are made of SUS301.

✻ The receiver lens diameters are given below.

Model	Receiver lens diameter
E3T-ST1□-D E3T-ST2□-D	(1.3 dia.)
E3T-ST3□-D	(2.4 dia.)

Through-beam Flat Sensors

E3T-FT1□
E3T-FT2□

Emitter

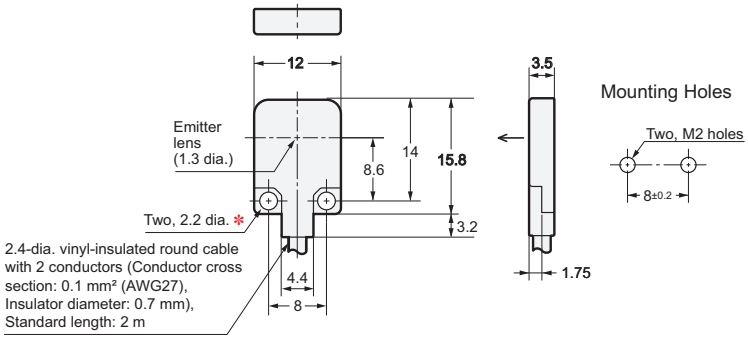

✻ The mounting holes are made of SUS301.

Receiver

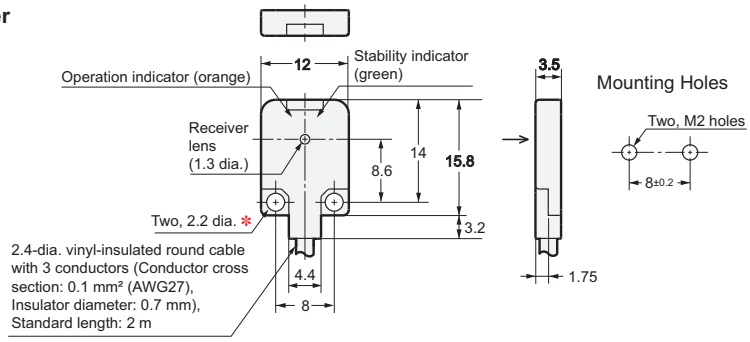

✻ The mounting holes are made of SUS301.

Retro-reflective Side-view Sensors

E3T-SR4□

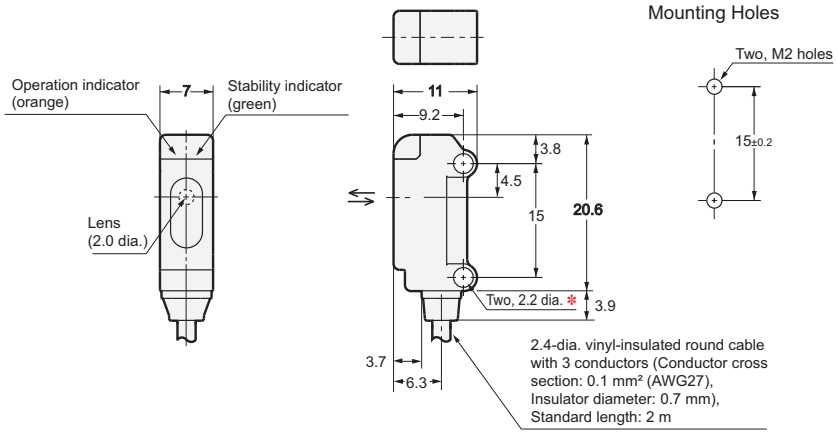

✻ The mounting holes are made of SUS301.

Diffuse-reflective Flat Sensors

E3T-FD1□

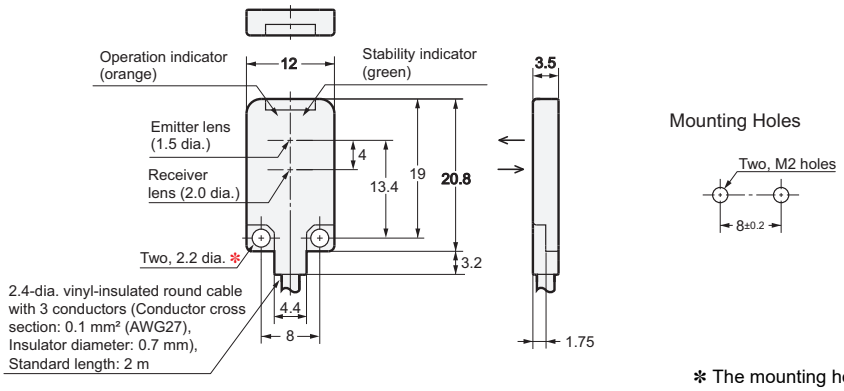

✻ The mounting holes are made of SUS301.

Limited-reflective Side-view Sensors

E3T-SL1□
E3T-SL2□

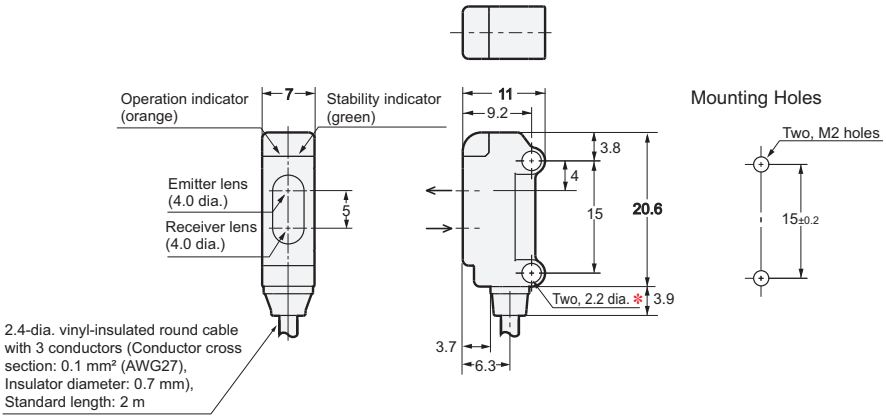

✻ The mounting holes are made of SUS301.

BGS-reflective Flat Sensors

E3T-FL1□
E3T-FL2□

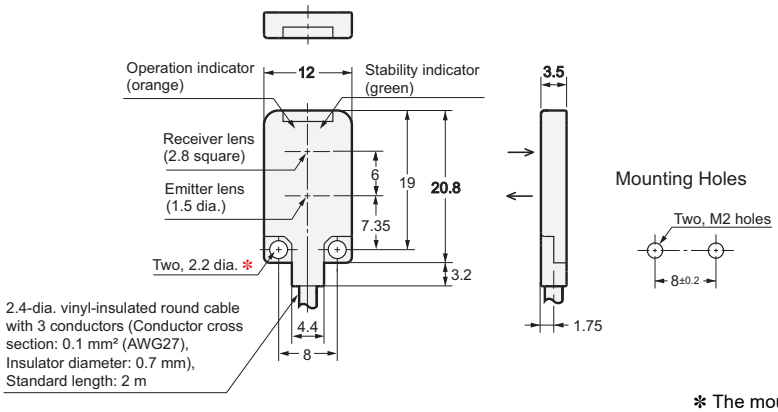

✻ The mounting holes are made of SUS301.

M3-mounting Sensors

Through-beam Side-view Sensors

E3T-ST1□M
E3T-ST2□M

Emitter

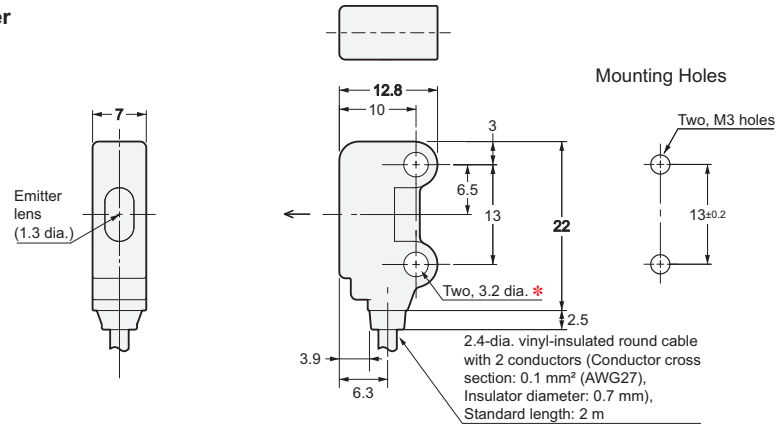

✻ The mounting holes are made of SUS304.

Receiver

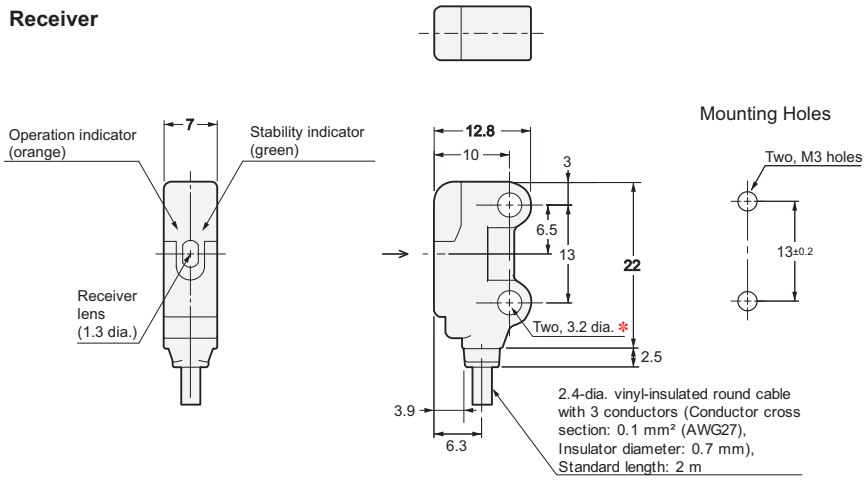

✻ The mounting holes are made of SUS304.

Diffuse-reflective Flat Sensors

E3T-FD1□M

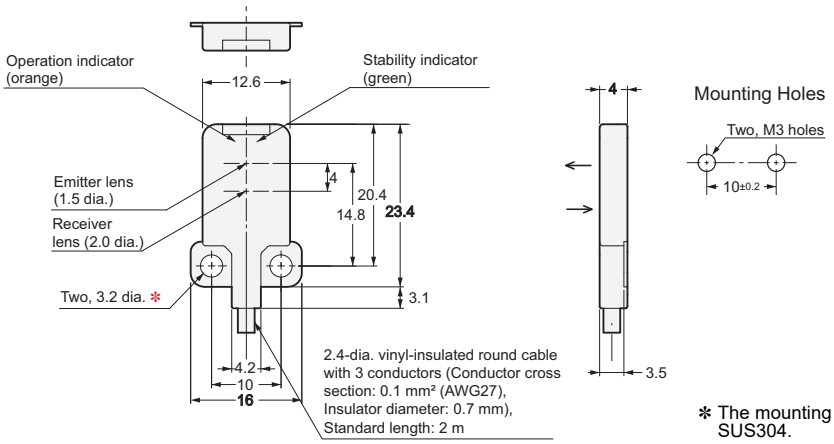

✻ The mounting holes and plate are made of SUS304.

Accessories

Reflector (Provided with E3T-SR4□)

E39-R4

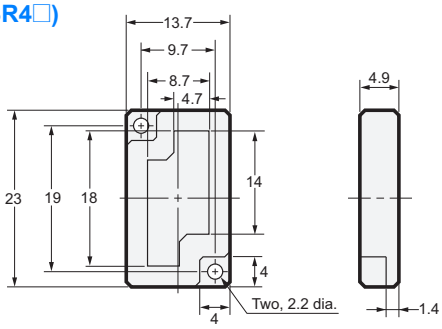

Material, reflective surface: acrylic
Rear surface: ABS

Reflector

E39-R37-CA

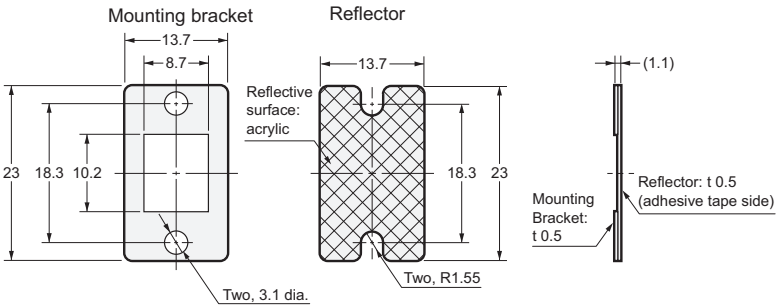

Material, Mounting plate: stainless steel (SUS301)
Reflective surface: acrylic

Note: The reflective plate and mounting plate (1) come as a set.

Accessories (Order Separately)

Tape Reflectors

E39-RS1-CA

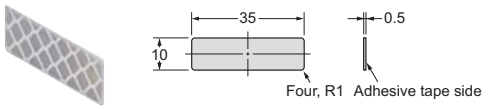

Material: Acrylic

E39-RS2-CA

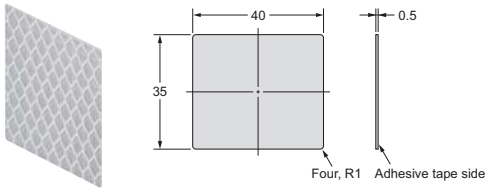

Material: Acrylic

E39-RS3-CA

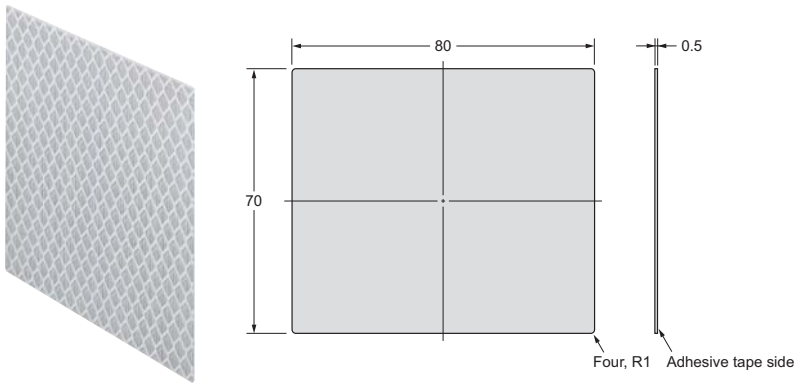

Material: Acrylic

Slit for E3T-ST□□ Through-beam Sensors

E39-S63

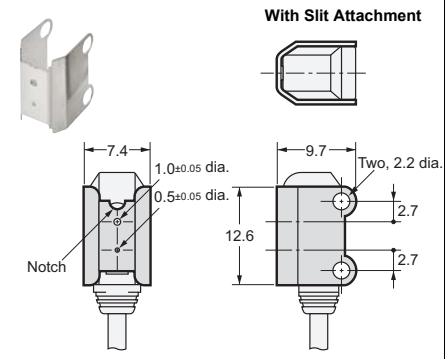

Material: 0.2-mm thick stainless steel (SUS301)

Note: Align the notch direction of the Slit when installing on the Emitter and Receiver.

Slit for E3T-FT□□ Through-beam Sensors

E39-S64

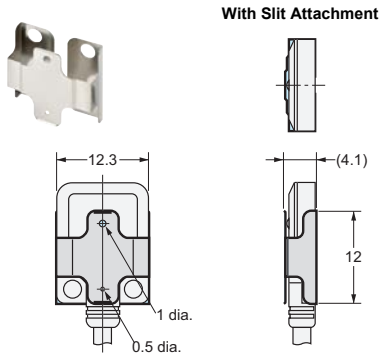

Material: 0.1-mm thick stainless steel (SUS301)

0.5-dia Slit for E3T-ST□□M Through-beam Sensors

E39-S76A

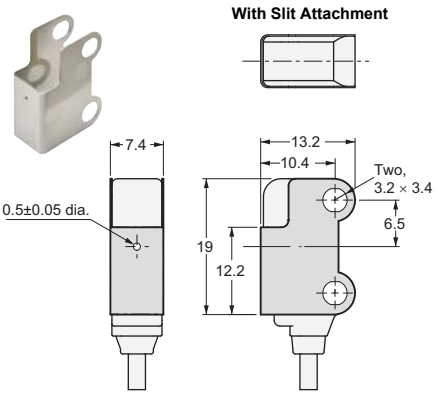

Material: 0.2-mm thick stainless steel (SUS301)

1-dia Slit for E3T-ST□□M Through-beam Sensors

E39-S76B

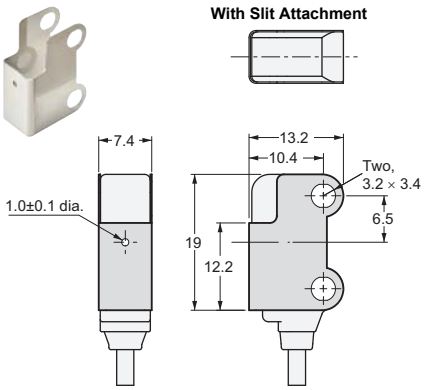

Material: 0.2-mm thick stainless steel (SUS301)

Sensitivity Adjustment Unit for E3T-ST1□/ST3□ Through-beam Sensors

E39-E10

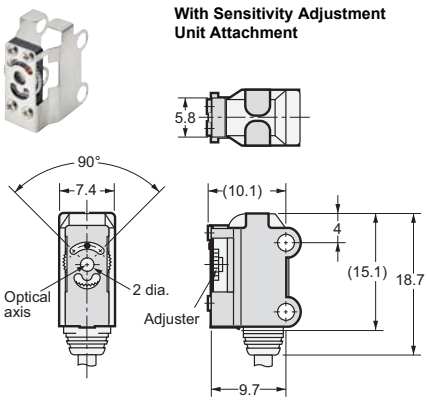

Material: stainless steel (SUS301)

Mounting Bracket for M2-mounting Side-view Sensors

E39-L116

Material: 1.2-mm-thick stainless steel (SUS304)

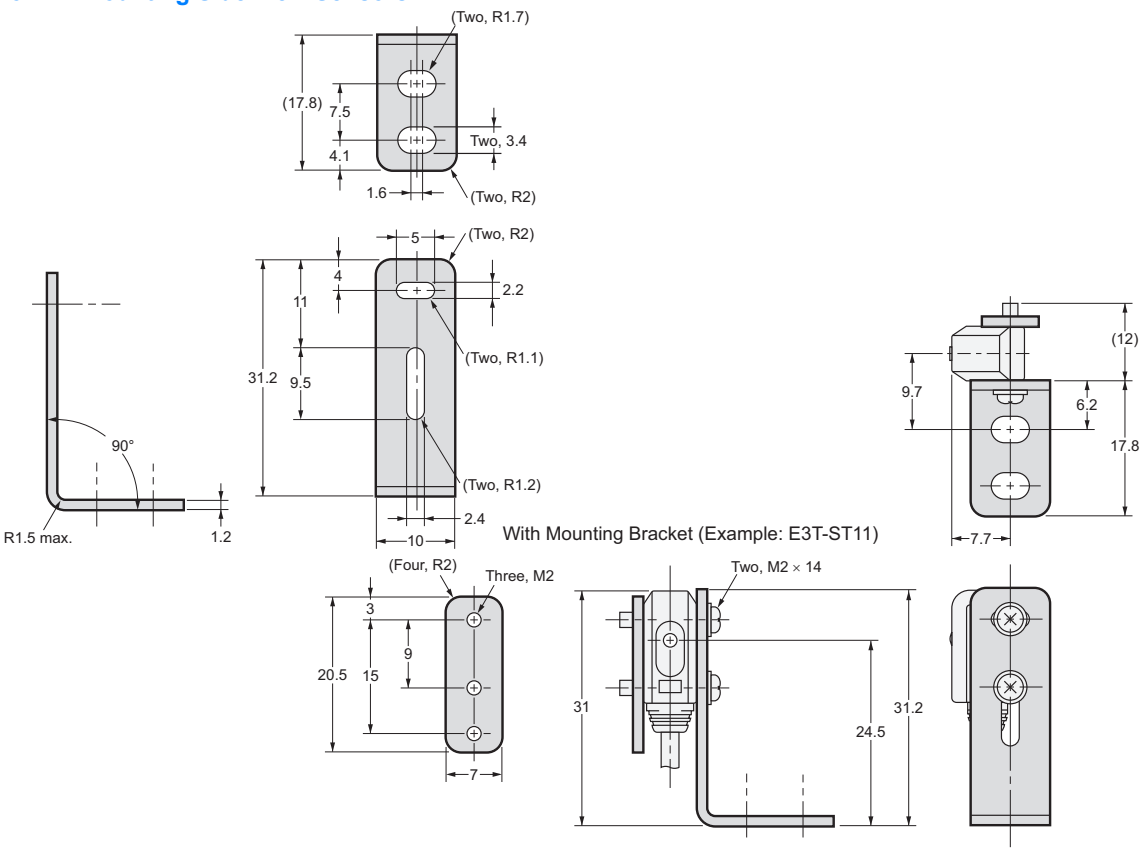

Mounting Bracket for M2-mounting Side-view Sensors

E39-L117

Material: 1.2-mm-thick stainless steel (SUS304)

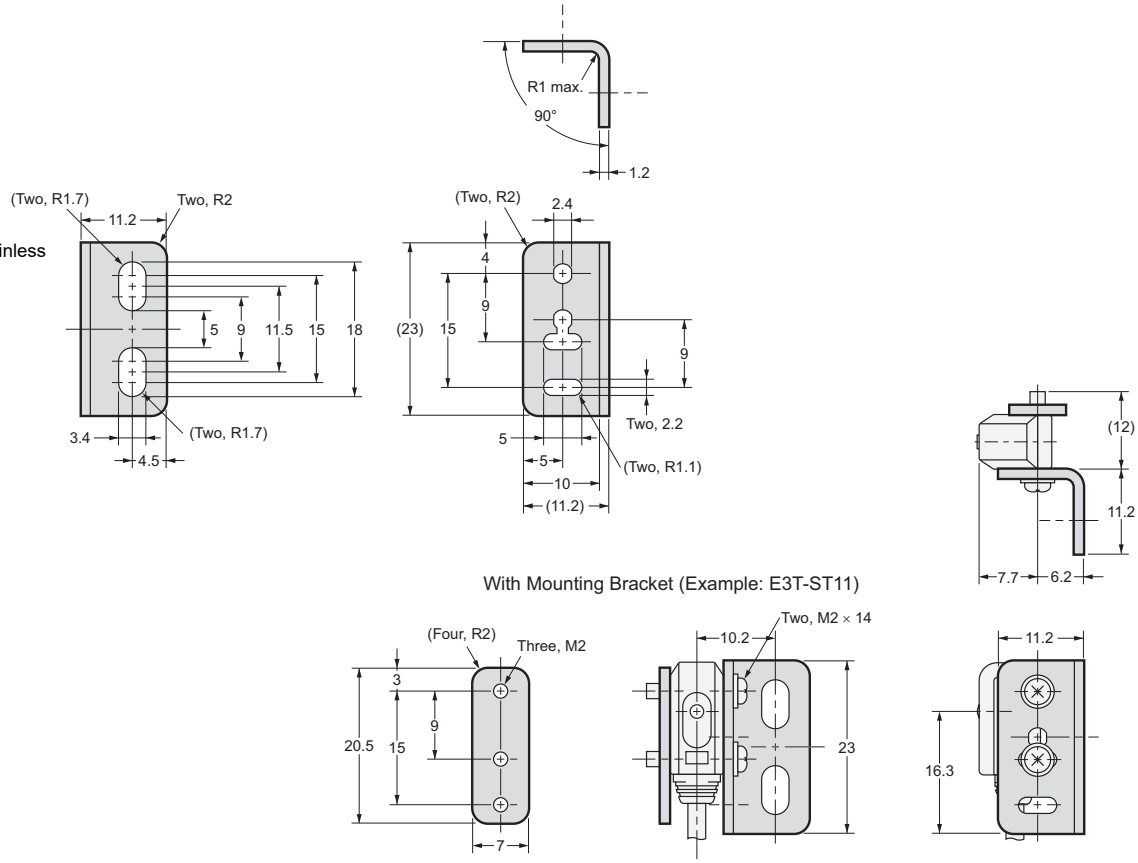

Mounting Bracket for M2-mounting Side-view Sensors

E39-L118

Material: 1.2-mm-thick stainless steel (SUS304)

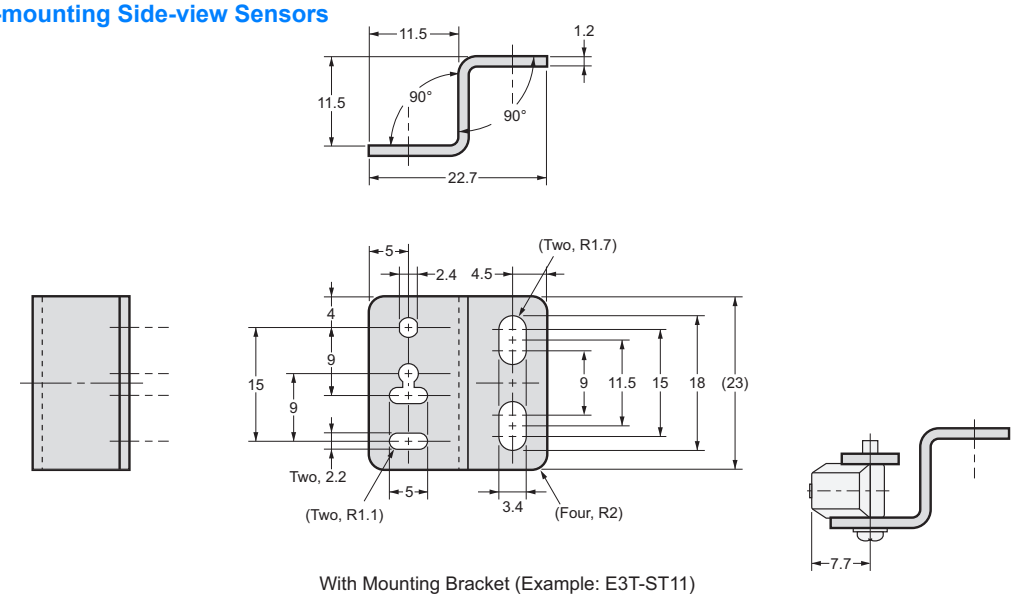

Mounting Bracket for M2-mounting Flat Sensors

E39-L119

Material: 1.2-mm-thick stainless steel (SUS304)

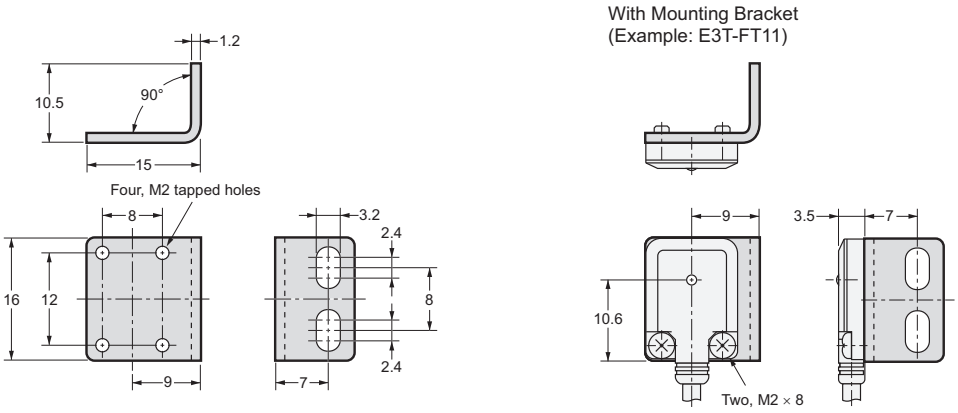

Mounting Bracket for M2-mounting Flat Sensors

E39-L120

Material: 1.2-mm-thick stainless steel (SUS304)

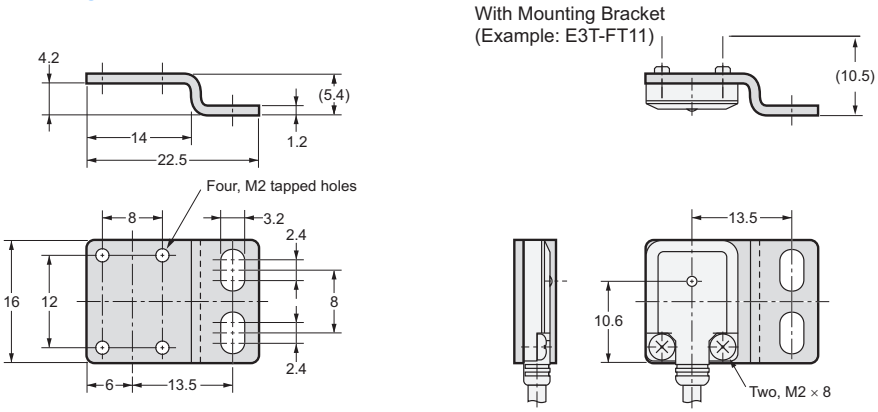

Mounting Bracket for M3-mounting Side-view Sensors

E39-L166

Material: 1.2-mm-thick stainless steel (SUS304)

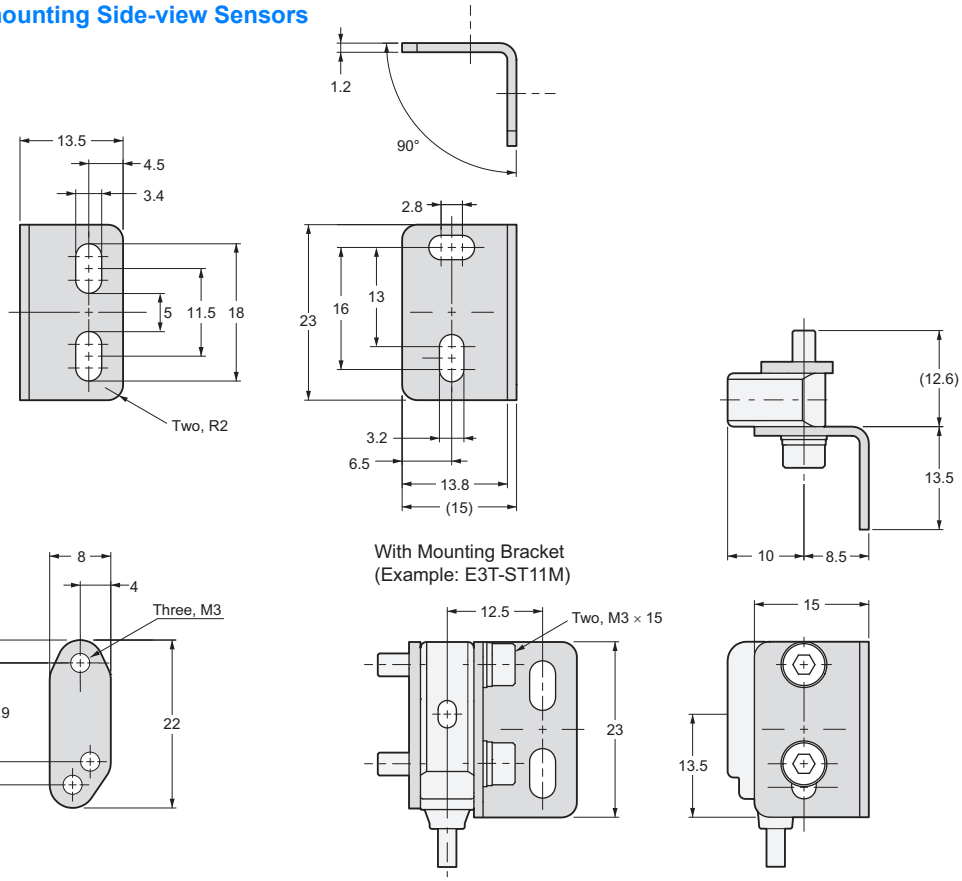

Mounting Bracket for M3-mounting Flat Sensors

E39-L167

Material: 1.5-mm-thick stainless steel (SUS304)

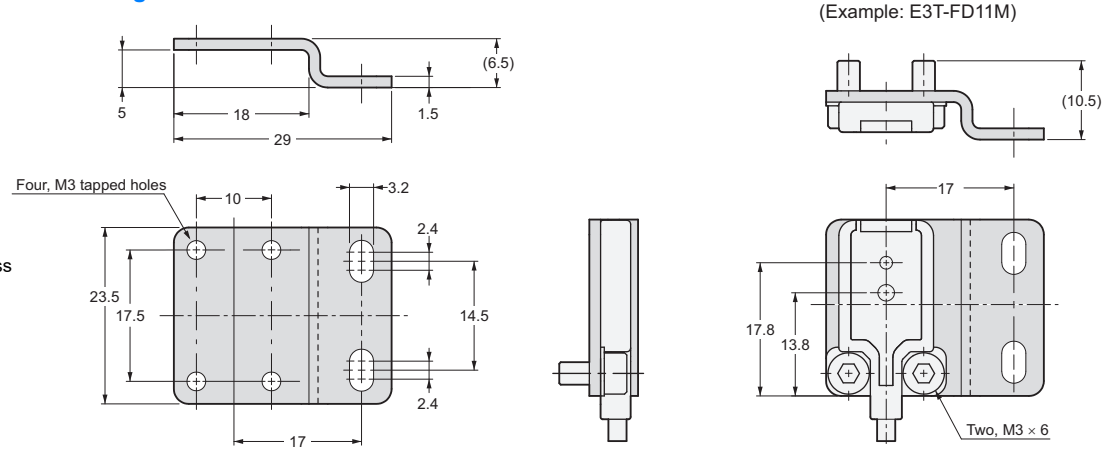

Back-mounting Spacer for M3-mounting Flat Sensors

E39-L168

Material: PBT (polybutylene terephthalate)

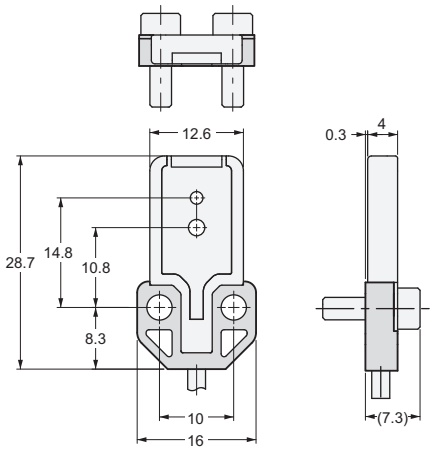

Note: Use this Spacer when mounting the Sensor from the back.

Terms and Conditions Agreement

Read and understand this catalog.
Please read and understand this catalog before purchasing the products. Please consult your OMRON representative if you have any questions or comments.

Warranties.
(a) Exclusive Warranty. Omron's exclusive warranty is that the Products will be free from defects in materials and workmanship for a period of twelve months from the date of sale by Omron (or such other period expressed in writing by Omron). Omron disclaims all other warranties, express or implied.
(b) Limitations. OMRON MAKES NO WARRANTY OR REPRESENTATION, EXPRESS OR IMPLIED, ABOUT NON-INFRINGEMENT, MERCHANTABILITY OR FITNESS FOR A PARTICULAR PURPOSE OF THE PRODUCTS. BUYER ACKNOWLEDGES THAT IT ALONE HAS DETERMINED THAT THE
PRODUCTS WILL SUITABLY MEET THE REQUIREMENTS OF THEIR INTENDED USE.
Omron further disclaims all warranties and responsibility of any type for claims or expenses based on infringement by the Products or otherwise of any intellectual property right. (c) Buyer Remedy. Omron's sole obligation hereunder shall be, at Omron's election, to (i) replace (in the form originally shipped with Buyer responsible for labor charges for removal or replacement thereof) the non-complying Product, (ii) repair the non-complying Product, or (iii) repay or credit Buyer an amount equal to the purchase price of the non-complying Product; provided that in no event shall Omron be responsible for warranty, repair, indemnity or any other claims or expenses regarding the Products unless Omron's analysis confirms that the Products were properly handled, stored, installed and maintained and not subject to contamination, abuse, misuse or inappropriate modification. Return of any Products by Buyer must be approved in writing by Omron before shipment. Omron Companies shall not be liable for the suitability or unsuitability or the results from the use of Products in combination with any electrical or electronic components, circuits, system assemblies or any other materials or substances or environments. Any advice, recommendations or information given orally or in writing, are not to be construed as an amendment or addition to the above warranty.
See http://www.omron.com/global/ or contact your Omron representative for published information.

Limitation on Liability; Etc.
OMRON COMPANIES SHALL NOT BE LIABLE FOR SPECIAL, INDIRECT, INCIDENTAL, OR CONSEQUENTIAL DAMAGES, LOSS OF PROFITS OR PRODUCTION OR COMMERCIAL LOSS IN ANY WAY CONNECTED WITH THE PRODUCTS, WHETHER SUCH CLAIM IS BASED IN CONTRACT, WARRANTY, NEGLIGENCE OR STRICT LIABILITY.
Further, in no event shall liability of Omron Companies exceed the individual price of the Product on which liability is asserted.

Suitability of Use.
Omron Companies shall not be responsible for conformity with any standards, codes or regulations which apply to the combination of the Product in the Buyer's application or use of the Product. At Buyer's request, Omron will provide applicable third party certification documents identifying ratings and limitations of use which apply to the Product. This information by itself is not sufficient for a complete determination of the suitability of the Product in combination with the end product, machine, system, or other application or use. Buyer shall be solely responsible for determining appropriateness of the particular Product with respect to Buyer's application, product or system. Buyer shall take application responsibility in all cases.
NEVER USE THE PRODUCT FOR AN APPLICATION INVOLVING SERIOUS RISK TO LIFE OR PROPERTY OR IN LARGE QUANTITIES WITHOUT ENSURING THAT THE SYSTEM AS A WHOLE HAS BEEN DESIGNED TO ADDRESS THE RISKS, AND THAT THE OMRON PRODUCT(S) IS PROPERLY RATED AND INSTALLED FOR THE INTENDED USE WITHIN THE OVERALL EQUIPMENT OR SYSTEM.

Programmable Products.
Omron Companies shall not be responsible for the user's programming of a programmable Product, or any consequence thereof.

Performance Data.
Data presented in Omron Company websites, catalogs and other materials is provided as a guide for the user in determining suitability and does not constitute a warranty. It may represent the result of Omron's test conditions, and the user must correlate it to actual application requirements. Actual performance is subject to the Omron's Warranty and Limitations of Liability.

Change in Specifications.
Product specifications and accessories may be changed at any time based on improvements and other reasons. It is our practice to change part numbers when published ratings or features are changed, or when significant construction changes are made. However, some specifications of the Product may be changed without any notice. When in doubt, special part numbers may be assigned to fix or establish key specifications for your application. Please consult with your Omron's representative at any time to confirm actual specifications of purchased Product.

Errors and Omissions.
Information presented by Omron Companies has been checked and is believed to be accurate; however, no responsibility is assumed for clerical, typographical or proofreading errors or omissions.

2026.3

In the interest of product improvement, specifications are subject to change without notice.

OMRON Corporation
Industrial Automation Company

http://www.ia.omron.com/

(c)Copyright OMRON Corporation 2026 All Right Reserved.